AUTHENTICATED
U.S. GOVERNMENT
INFORMATION
GPO

Federal Register

1–16–02 Wednesday
Vol. 67 No. 11 Jan. 16, 2002
Pages 2131–2316

The **FEDERAL REGISTER** is published daily, Monday through Friday, except official holidays, by the Office of the Federal Register, National Archives and Records Administration, Washington, DC 20408, under the Federal Register Act (44 U.S.C. Ch. 15) and the regulations of the Administrative Committee of the Federal Register (1 CFR Ch. I). The Superintendent of Documents, U.S. Government Printing Office, Washington, DC 20402 is the exclusive distributor of the official edition.

The **Federal Register** provides a uniform system for making available to the public regulations and legal notices issued by Federal agencies. These include Presidential proclamations and Executive Orders, Federal agency documents having general applicability and legal effect, documents required to be published by act of Congress, and other Federal agency documents of public interest.

Documents are on file for public inspection in the Office of the Federal Register the day before they are published, unless the issuing agency requests earlier filing. For a list of documents currently on file for public inspection, see http://www.nara.gov/fedreg.

The seal of the National Archives and Records Administration authenticates the Federal Register as the official serial publication established under the Federal Register Act. Under 44 U.S.C. 1507, the contents of the **Federal Register** shall be judicially noticed.

The **Federal Register** is published in paper and on 24x microfiche. It is also available online at no charge as one of the databases on GPO Access, a service of the U.S. Government Printing Office.

The online edition of the **Federal Register** is issued under the authority of the Administrative Committee of the Federal Register as the official legal equivalent of the paper and microfiche editions (44 U.S.C. 4101 and 1 CFR 5.10). It is updated by 6 a.m. each day the **Federal Register** is published and it includes both text and graphics from Volume 59, Number 1 (January 2, 1994) forward.

GPO Access users can choose to retrieve online **Federal Register** documents as TEXT (ASCII text, graphics omitted), PDF (Adobe Portable Document Format, including full text and all graphics), or SUMMARY (abbreviated text) files. Users should carefully check retrieved material to ensure that documents were properly downloaded.

On the World Wide Web, connect to the **Federal Register** at http://www.access.gpo.gov/nara. Those without World Wide Web access can also connect with a local WAIS client, by Telnet to swais.access.gpo.gov, or by dialing (202) 512–1661 with a computer and modem. When using Telnet or modem, type swais, then log in as guest with no password.

For more information about GPO Access, contact the GPO Access User Support Team by E-mail at gpoaccess@gpo.gov; by fax at (202) 512–1262; or call (202) 512–1530 or 1–888–293–6498 (toll free) between 7 a.m. and 5 p.m. Eastern time, Monday–Friday, except Federal holidays.

The annual subscription price for the **Federal Register** paper edition is $699, or $764 for a combined **Federal Register, Federal Register** Index and List of CFR Sections Affected (LSA) subscription; the microfiche edition of the **Federal Register** including the **Federal Register** Index and LSA is $264. Six month subscriptions are available for one-half the annual rate. The charge for individual copies in paper form is $10.00 for each issue, or $10.00 for each group of pages as actually bound; or $2.00 for each issue in microfiche form. All prices include regular domestic postage and handling. International customers please add 25% for foreign handling. Remit check or money order, made payable to the Superintendent of Documents, or charge to your GPO Deposit Account, VISA, MasterCard or Discover. Mail to: New Orders, Superintendent of Documents, P.O. Box 371954, Pittsburgh, PA 15250–7954.

There are no restrictions on the republication of material appearing in the **Federal Register.**

How To Cite This Publication: Use the volume number and the page number. Example: 67 FR 12345.

SUBSCRIPTIONS AND COPIES

PUBLIC

Subscriptions:

Paper or fiche	**202–512–1800**
Assistance with public subscriptions	**202–512–1806**

General online information **202–512–1530; 1–888–293–6498**

Single copies/back copies:

Paper or fiche	**202–512–1800**
Assistance with public single copies	**1–866–512–1800 (Toll-Free)**

FEDERAL AGENCIES

Subscriptions:

Paper or fiche	**202–523–5243**
Assistance with Federal agency subscriptions	**202–523–5243**

What's NEW!

Federal Register Table of Contents via e-mail

Subscribe to FEDREGTOC, to receive the **Federal Register** Table of Contents in your e-mail every day.

If you get the HTML version, you can click directly to any document in the issue.

To subscribe, go to **http://listserv.access.gpo.gov** and select:

Online mailing list archives
FEDREGTOC-L
Join or leave the list

Then follow the instructions.

FEDERAL REGISTER WORKSHOP

THE FEDERAL REGISTER: WHAT IT IS AND HOW TO USE IT

FOR: Any person who uses the **Federal Register** and Code of Federal Regulations.

WHO: Sponsored by the Office of the Federal Register.

WHAT: Free public briefings (approximately 3 hours) to present:

1. The regulatory process, with a focus on the Federal Register system and the public's role in the development of regulations.
2. The relationship between the **Federal Register** and Code of Federal Regulations.
3. The important elements of typical **Federal Register** documents.
4. An introduction to the finding aids of the FR/CFR system.

WHY: To provide the public with access to information necessary to research Federal agency regulations which directly affect them. There will be no discussion of specific agency regulations.

WASHINGTON, DC

WHEN: January 30, 2002—9:00 a.m. to noon

WHERE: Office of the Federal Register
Conference Room
800 North Capitol Street, NW.
Washington, DC
(3 blocks north of Union Station Metro)

RESERVATIONS: 202–523–4538; or
info@fedreg.nara.gov

Printed on recycled paper.

Contents

Federal Register

Vol. 67, No. 11

Wednesday, January 16, 2002

African Development Foundation
NOTICES
Meetings; Sunshine Act, 2180

Agriculture Department
See Commodity Credit Corporation

Army Department
See Engineers Corps

Census Bureau
NOTICES
Agency information collection activities:
Proposed collection; comment request, 2186–2188

Centers for Disease Control and Prevention
NOTICES
Agency information collection activities:
Submission for OMB review; comment request, 2216

Centers for Medicare & Medicaid Services
NOTICES
Privacy Act:
Systems of records, 2216–2222

Coast Guard
NOTICES
Meetings:
Marine transportation systems; security measures, standards, and responses to threats and acts of crime and terrorism; workshop, 2271–2272

Commerce Department
See Census Bureau
See Economic Development Administration
See International Trade Administration
See National Oceanic and Atmospheric Administration
RULES
Freedom of Information Act and Privacy Act; correction, 2135
NOTICES
Agency information collection activities:
Submission for OMB review; comment request, 2180–2186

Commodity Credit Corporation
RULES
Conservation Reserve Program:
Good faith reliance and excessive rainfall, 2131–2132

Consumer Product Safety Commission
NOTICES
Meetings; Sunshine Act, 2199

Defense Department
See Engineers Corps
NOTICES
Meetings:
Science Board task forces, 2199

Economic Development Administration
NOTICES
Agency information collection activities:
Submission for OMB review; comment request, 2189

Education Department
NOTICES
Agency information collection activities:
Submission for OMB review; comment request, 2201–2202
Postsecondary education:
Federal Perkins Loan, Federal Work-Study, and Federal Supplemental Educational Opportunity Grant Programs—
Fiscal operations report and application to participate, 2202–2203

Employment and Training Administration
NOTICES
Agency information collection activities:
Proposed collection; comment request, 2244–2245

Employment Standards Administration
NOTICES
Agency information collection activities:
Proposed collection; comment request, 2245–2246

Energy Department
See Federal Energy Regulatory Commission

Engineers Corps
NOTICES
Environmental statements; availability, etc.:
Arthur Kill Channel—Howland Hook Marine Terminal, NY and NJ, 2199
Environmental statements; notice of intent:
Asharoken, NY; hurricane and storm damage reduction project, 2199–2200
Bayville, NY; hurricane and storm damage reduction project, 2200–2201
Maricopa County, AZ; Va Shly'ay Akimel Salt River Restoration Project, AZ; meeting, 2201

Environmental Protection Agency
PROPOSED RULES
Air pollutants, hazardous; national emission standards:
Delegations' provisions; clarifications, 2285–2315
Air pollution control; new motor vehicles and engines:
Heavy-duty diesel engines and vehicles; 2004 and later model year emission standards; nonconformance penalties, 2159–2175
Pesticides; tolerances in food, animal feeds, and raw agricultural commodities:
Nicotine, 2175–2179
NOTICES
Pesticide programs:
Organophosphates; risk assessments and public participation in risk management—
Terbufos, 2209–2210
Reports and guidance documents; availability, etc.:
Pesticide chemicals having common toxicity mechanism; cumulative risk assessment, 2210–2214

Executive Office of the President
See Trade Representative, Office of United States

Federal Aviation Administration
RULES
Airworthiness directives:
Eurocopter France, 2132–2134
Class E airspace, 2134
PROPOSED RULES
Airworthiness directives:
Bell, 2146–2148
MD Helicopters, Inc., 2145–2146
Class D airspace, 2156–2157
Class D and Class E airspace, 2152–2154
Class E airspace, 2148–2152, 2154–2156
NOTICES
Exemption petitions; summary and disposition, 2272–2274

Federal Energy Regulatory Commission
NOTICES
Electric rate and corporate regulation filings:
Entergy Services, Inc., et al., 2207–2208
Environmental statements; availability, etc.:
Commonwealth Power Co., 2208
Hydroelectric applications, 2208–2209
Meetings:
Electricity market design and structure; conference, 2209
Applications, hearings, determinations, etc.:
Algonquin Gas Transmission Co., 2203–2204
Dominion Transmission, Inc., 2204
Eastern Shore Natural Gas Co., 2205
East Tennessee Natural Gas Co., 2204–2205
Iroquois Gas Transmission System, L.P., 2205
Maritimes & Northeast Pipeline L.L.C., 2205–2206
Tacoma, WA, 2206
Texas Eastern Transmission, LP, 2206–2207
Wyoming Interstate Co., Ltd., 2207

Federal Highway Administration
NOTICES
Grants and cooperative agreements; availability, etc.:
Congestion mitigation and air quality improvement program; high speed rail projects, 2278–2281
Regional multi-modal 511 traveler information system; model deployment, 2274–2278

Federal Railroad Administration
PROPOSED RULES
U.S. rail operations; U.S. locational requirement for dispatching; hearing, 2179

Federal Reserve System
NOTICES
Meetings; Sunshine Act, 2214

Federal Transit Administration
NOTICES
Grants and cooperative agreements; availability, etc.:
Congestion mitigation and air quality improvement program; high speed rail projects, 2278–2281
Regional multi-modal 511 traveler information system; model deployment, 2274–2278

Food and Drug Administration
NOTICES
Prescription drug user fee rates FY 2002, 2222–2226
Reports and guidance documents; availability, etc.:
Creutzfeldt-Jakob disease and variant; preventive measures to reduce possible risk of transmission by blood and blood products, 2226–2227

General Services Administration
NOTICES
Agency information collection activities:
Submission for OMB review; comment request, 2214–2215

Geological Survey
NOTICES
Agency information collection activities:
Submission for OMB review; comment request, 2234–2235

Government Ethics Office
NOTICES
Agency information collection activities:
Submission for OMB review; comment request, 2215–2216

Health and Human Services Department
See Centers for Disease Control and Prevention
See Centers for Medicare & Medicaid Services
See Food and Drug Administration

Housing and Urban Development Department
NOTICES
Agency information collection activities:
Proposed collection; comment request, 2227–2228
Grant and cooperative agreement awards:
Housing Counseling Program, 2228–2234

Interior Department
See Geological Survey
See Land Management Bureau
See Minerals Management Service

Internal Revenue Service
NOTICES
Agency information collection activities:
Proposed collection; comment request, 2283–2284

International Trade Administration
NOTICES
Antidumping:
Circular welded carbon-quality steel pipe from—
China, 2189
Large newspaper printing presses and components, assembled or unassembled, from—
Germany, 2192–2194
Japan, 2190–2192
Stainless steel sheet and strip in coils from—
Korea, 2194–2196
Applications, hearings, determinations, etc.:
Scripps Research Institute, 2196

International Trade Commission
NOTICES
Import investigations:
Ferrovanadium from—
China and South Africa, 2236–2237
Tools, dies, and industrial molds; competitive conditions in U.S. and selected foreign markets; hearing, 2237

Justice Department
NOTICES
Aliens; provision of aviation training to certain alien trainees, 2238–2239
Pollution control; consent judgments:
American Allied Additives, Inc., et al., 2239

American Scrap Co.; republication, 2239–2240
ATOFINA Chemicals, Inc., 2240
Chevron Environmental Management Co. et al., 2240–2241
Greenwich, CT, 2241
Jacksonville, FL, et al., 2241–2242
Knauf Fiber Glass GmbH; republication, 2242
New Albany, IN; republication, 2242–2243
Pemaco, Inc., et al., 2243
S.W. Chemical Co., Inc., 2243–2244
Superfund program:
Bankruptcy settlement agreements—
American Allied Additives Site, OH, 2244

Labor Department
See Employment and Training Administration
See Employment Standards Administration
See Mine Safety and Health Administration

Land Management Bureau
NOTICES
Meetings:
Resource Advisory Councils—
Oregon, 2235

Minerals Management Service
NOTICES
Agency information collection activities:
Proposed collection; comment request, 2235–2236

Mine Safety and Health Administration
NOTICES
Agency information collection activities:
Proposed collection; comment request, 2246–2247

National Aeronautics and Space Administration
NOTICES
Meetings:
Advisory Council
Minority Business Resource Advisory Committee, 2247
Patent licenses; non-exclusive, exclusive, or partially exclusive:
Boundary Layer Research Inc., 2247
Maecker & Co., 2247
Phoenix Systems International, Inc., 2247–2248
Williams Electrical Systems Co., 2248

National Oceanic and Atmospheric Administration
NOTICES
Agency information collection activities:
Proposed collection; comment request, 2196–2197
Meetings:
North Pacific Fishery Management Council, 2198
Permits:
Marine mammals, 2198–2199

National Science Foundation
NOTICES
Agency information collection activities:
Proposed collection; comment request, 2248–2249
Submission for OMB review; comment request, 2249–2250
Meetings; Sunshine Act, 2250

Nuclear Regulatory Commission
NOTICES
Environmental statements; availability, etc.:
Alaron Corp., 2250–2251
BWX Technologies, Inc., 2251–2254
Applications, hearings, determinations, etc.:
Exelon Generation Co., LLC, 2250

Office of United States Trade Representative
See Trade Representative, Office of United States

Postal Service
RULES
Board of Governors bylaws:
Semipostal stamps; price establishment, 2135

Public Health Service
See Centers for Disease Control and Prevention
See Food and Drug Administration

Railroad Retirement Board
PROPOSED RULES
Railroad Unemployment Insurance Act:
Employers' contributions and contribution reports; filing via Internet, 2157–2159

Research and Special Programs Administration
RULES
Pipeline safety:
Hazardous liquid transportation—
Pipeline integrity management in high consequence areas, 2136–2144

Securities and Exchange Commission
NOTICES
Agency information collection activities:
Proposed collection; comment request, 2254–2255
Self-regulatory organizations; proposed rule changes:
American Stock Exchange LLC, 2255–2256
National Association of Securities Dealers, Inc., 2256–2263
New York Stock Exchange, Inc., 2263–2266
Pacific Exchange, Inc., 2266–2267
Stock Clearing Corp. of Philadelphia, 2267–2269

Small Business Administration
NOTICES
Agency information collection activities:
Proposed collection; comment request, 2269
Meetings:
Regulatory Fairness Boards—
Region IV; Public Roundtable, 2269
Meetings; district and regional advisory councils:
Minnesota, 2269–2270

Surface Transportation Board
NOTICES
Railroad operation, acquisition, construction, etc.:
Burlington Northern & Santa Fe Railway Co., 2281
Norfolk Southern Railway Co., 2281

Trade Representative, Office of United States
NOTICES
Meetings:
Industry Sector Advisory Committees—
Small and Minority Business, 2270

Transportation Department
See Coast Guard
See Federal Aviation Administration
See Federal Highway Administration
See Federal Railroad Administration

See Federal Transit Administration
See Research and Special Programs Administration
See Surface Transportation Board
See Transportation Statistics Bureau
NOTICES
Aviation proceedings:
Agreements filed; weekly receipts, 2270
Certificates of public convenience and necessity and foreign air carrier permits; weekly applications, 2270–2271

Transportation Statistics Bureau
NOTICES
Agency information collection activities:
Proposed collection; comment request, 2281–2283

Treasury Department
See Internal Revenue Service
See United States Mint

United States Mint
NOTICES
Agency information collection activities:
Proposed collection; comment request, 2284

Separate Parts In This Issue

Part II
Environmental Protection Agency, 2285–2315

Reader Aids
Consult the Reader Aids section at the end of this issue for phone numbers, online resources, finding aids, reminders, and notice of recently enacted public laws.
To subscribe to the Federal Register Table of Contents LISTSERV electronic mailing list, go to http://listserv.access.gpo.gov and select Online mailing list archives, FEDREGTOC-L, Join or leave the list (or change settings); then follow the instructions.

CFR PARTS AFFECTED IN THIS ISSUE

A cumulative list of the parts affected this month can be found in the Reader Aids section at the end of this issue.

7 CFR
1410.....2131

14 CFR
39.....2132
71.....2134

Proposed Rules:
39 (2 documents) 2145, 2146
71 (8 documents) ...2148, 2149, 2150, 2151, 2152, 2154, 2155, 2156

15 CFR
4a.....2135

20 CFR

Proposed Rules:
345.....2157

39 CFR
3.....2135

40 CFR

Proposed Rules:
63.....2286
86.....2159
180.....2175

49 CFR
195.....2136

Proposed Rules:
241.....2179

Rules and Regulations

Federal Register
Vol. 67, No. 11
Wednesday, January 16, 2002

This section of the FEDERAL REGISTER contains regulatory documents having general applicability and legal effect, most of which are keyed to and codified in the Code of Federal Regulations, which is published under 50 titles pursuant to 44 U.S.C. 1510.

The Code of Federal Regulations is sold by the Superintendent of Documents. Prices of new books are listed in the first FEDERAL REGISTER issue of each week.

DEPARTMENT OF AGRICULTURE

Commodity Credit Corporation

7 CFR Part 1410

RIN 0560–AG37

Conservation Reserve Program—Good Faith Reliance and Excessive Rainfall

AGENCY: Farm Service Agency and Commodity Credit Corporation, USDA.

ACTION: Final rule.

SUMMARY: This rule amends the Conservation Reserve Program (CRP) regulations to provide, under certain conditions, for equitable relief to producers who violated their contract based on a good faith reliance on the action or advice of certain USDA representatives. It also provides that CRP contracts will not be terminated for failure to plant cover when that failure was due to excess rainfall or flooding.

DATES: This regulation is effective January 16, 2002.

FOR FURTHER INFORMATION CONTACT: Mr. James Michaels, (202) 720–8774, or via e-mail at: *crprule@wdc.usda.gov* or on the FSA web page at *http://www.fsa/usda/gov/.*

SUPPLEMENTARY INFORMATION:

Executive Order 12866

This final rule has been determined to be not significant and, therefore, was not reviewed by the Office of Management and Budget (OMB).

Regulatory Flexibility Act

It has been determined that the Regulatory Flexibility Act is not applicable to this rule because the Commodity Credit Corporation (CCC) is not required by 5 U.S.C. 553 or any other provision of law to publish a notice of proposed rulemaking with respect to the subject matter of this rule.

Environmental Evaluation

In accordance with 7 CFR part 799, an environmental assessment was conducted to determine whether the actions included in this final rule would significantly affect the quality of the human environment. A determination was made that the actions of this final rule would have no significant impact on the human environment and the preparation of an Environmental Impact Statement is not necessary.

Executive Order 12988

This final rule has been reviewed in accordance with Executive Order 12988. This final rule is not retroactive and does not pre-empt State laws. Before any judicial action may be taken with respect to the provisions of the final rule, administrative remedies at 7 CFR parts 11 and 780 must be exhausted.

Executive Order 12372

This program is not subject to the provisions of Executive Order 12372, which requires intergovernmental consultation with State and local officials. See the notice related to 7 CFR part 3015, subpart V, published at 48 FR 29115 (June 24, 1983).

Unfunded Mandates

Title II of the Unfunded Mandate Reform Act of 1995 (UMRA), Public Law 104–4, establishes requirements for Federal agencies to assess the effects of their proposed and final rules with ''Federal Mandates'' that may result in expenditures to State, local, or tribal governments, in the aggregate, or the private sector, of $100 million or more in any one year. This rule contains no Federal mandates under the regulatory provisions of Title II of the UMRA for State, local, and tribal government or the private sector. Therefore, this rule is not subject to the requirements of sections 202 and 205 of the UMRA.

Federal Domestic Assistance Program

The title and number of the Federal Domestic Assistance Program, as found in the Catalog of Federal Domestic Assistance, to which this rule applies, is the Conservation Reserve Program—10.069.

Paperwork Reduction Act

The Office of Management and Budget approved the information collection requirements contained in the current regulations at 7 CFR part 1410 under provisions of 44 U.S.C. chapter 33 and OMB control number 0560–0125 was assigned. This rule will have no impact on the burden approved under that control number.

Discussion of Final Rule

The purpose of the Conservation Reserve Program (CRP) is to cost-effectively assist owners and operators in conserving and improving soil, water, and wildlife resources by converting highly erodible and other environmentally sensitive acreage normally devoted to the production of agricultural commodities to a long-term vegetative cover. CRP participants enter into contracts for 10 to 15 years in exchange for annual rental payments and cost-share assistance for installing certain conservation practices. In determining the amount of annual rental payments to be paid, CCC considers, among other things, the amount necessary to encourage owners or operators of eligible cropland to participate in the CRP. Offers are submitted in such a manner as the Secretary prescribes. Acreage is accepted into the CRP based on the eligibility requirements contained in 7 CFR part 1410.

On March 15, 2001, the Agency published a proposed rule, at 66 FR 15048. First, the rule proposed to implement section 755 of the Agriculture, Rural Development, Food and Drug Administration, and Related Agencies Appropriations Act, 2001 (the 2001 Act) (Pub. L. 106–387). The comment period ended on May 14, 2001. This law requires the Secretary to provide equitable relief to someone who violates a CRP contract if they took actions in good faith reliance on the action or advice of an authorized representative of the Secretary. If the Secretary determines that a CRP participant has been injured by such good faith reliance, the Secretary may allow that person some relief from the contract breach, as long as action is taken to correct the violation, and subject to other limitations promulgated in this rule.

The second change that CCC proposed allows the Secretary to not terminate a CRP contract for failure to establish approved vegetative cover or water cover if the failure to establish that cover was due to excessive rainfall or

flooding. Conditions for this waiver were discussed in the proposed rule.

This rule implements these two new statutory amendments by revising the CRP regulations contained in 7 CFR part 1410. These changes will help ensure that the CRP is implemented in a fair and reasonable manner, and that participants are not penalized unjustly.

Summary of Comments

CCC did not receive any comments from the public concerning the proposed rule. Three comments came from one individual who is an FSA employee in Kansas. These comments were of an administrative nature and can be addressed in internal agency procedure.

Substantive Changes From the Proposed Rule

There were no substantive changes compared to the proposed rule.

List of Subjects in 7 CFR Part 1410

Conservation Reserve Program: administrative practices and procedures, agriculture, conservation plan, grazing lands, and natural resources.

For reasons set out in the preamble, 7 CFR part 1410 is amended as follows:

PART 1410—CONSERVATION RESERVE PROGRAM

1. The authority citation for 7 CFR part 1410 continues to reads as follows:

Authority: 15 U.S.C. 714b and 714c; 16 U.S.C. 3801–3847.

2. In § 1410.2, the definition of ''violation'' is added to read as follows:

§ 1410.2 Definitions.

* * * * *

Violation means an act by the participant, either intentional or unintentional, which would cause the participant to no longer be eligible for cost-share or annual contract payments.

* * * * *

3. Section 1410.20(a) is revised to read as follows:

§ 1410.20 Obligations of participant.

* * * * *

(a) * * *

(a)(2) Implement the conservation plan, which is part of such contract, in accordance with the schedule of dates included in such conservation plan unless the Deputy Administrator determines that the participant cannot fully implement the conservation plan for reasons beyond the participant's control and CCC agrees to a modified plan. However, a contract will not be terminated for failure to establish an approved vegetative or water cover on the land if as determined by the Deputy Administrator:

(i) The failure to plant or establish such cover was due to excessive rainfall or flooding;

(ii) The land subject to the contract on which the participant could practicably plant or establish to such cover is planted or established to such cover; and

(iii) The land on which the participant was unable to plant or establish such cover is planted or established to such cover after the wet conditions that prevented the planting or establishment subside.

* * * * *

4. Section 1410.54 is revised to read as follows:

§ 1410.54 Performance based upon advice or action of the Department.

(a) The provisions of § 718.8 of this title relating to performance based upon the action or advice of a representative of the Department shall be applicable to this part, and may be considered as a basis to provide relief to persons subject to sanctions under this part to the extent that relief is not mandated by the other provisions of this section.

(b) Further, except as provided in paragraph (b) (3) of this section, and notwithstanding any other provision of this chapter, the Deputy Administrator may provide equitable relief to a participant who has entered into a contract under this chapter, and who is subsequently determined to be in violation of the contract, if the participant, in attempting to comply with the terms of the contract and enrollment requirements, took actions in good faith reliance upon the action or advice of an authorized USDA representative, as determined by the Deputy Administrator, provided:

(1) The Deputy Administrator determines that a participant has been injured by such good faith reliance, in which case, the participant may be authorized, as determined appropriate by the Deputy Administrator, to do any one or more of the following;

(i) Retain payments received under the contract;

(ii) Continue to receive payments under the contract;

(iii) Keep all or part of the land covered by the contract enrolled in the applicable program under this chapter;

(iv) Re-enroll all or part of the land covered by the contract in the applicable program under this chapter; or

(v) Any other equitable relief the Deputy Administrator deems appropriate.

(2) If relief under this section is authorized by the Deputy Administrator, the participant must take such actions as are determined by the Deputy Administrator to remedy any failure to comply with the contract.

(3) This section shall not apply to a pattern of conduct, as determined by the Deputy Administrator, in which an authorized USDA representative takes actions or provides advice with respect to a participant that the representative and the participant both know, or should have known, are inconsistent with applicable law (including regulations).

(4) Relief under this paragraph shall be available only for contracts in effect on January 1, 2000, or thereafter.

Signed at Washington, DC, on January 9, 2002.

James R. Little,

Executive Vice President, Commodity Credit Corporation.

[FR Doc. 02–1052 Filed 1–15–02; 8:45 am]

BILLING CODE 3410–05–P

DEPARTMENT OF TRANSPORTATION

Federal Aviation Administration

14 CFR Part 39

[Docket No. 2001–SW–11–AD; Amendment 39–12597; AD 2002–01–06]

RIN 2120–AA64

Airworthiness Directives; Eurocopter France Model AS332L2 Helicopters

AGENCY: Federal Aviation Administration, DOT.

ACTION: Final rule; request for comments.

SUMMARY: This amendment adopts a new airworthiness directive (AD) for Eurocopter France Model AS332L2 helicopters. This action requires inspecting the main frame for a crack and repairing any unairworthy frame before further flight. This amendment is prompted by a report of cracks on the right-hand (RH) side of a main frame. This condition, if not corrected, could result in failure of the main frame and subsequent loss of control of the helicopter.

DATES: Effective January 31, 2002.

Comments for inclusion in the Rules Docket must be received on or before March 18, 2002.

ADDRESSES: Submit comments in triplicate to the Federal Aviation

Administration (FAA), Office of the Regional Counsel, Southwest Region, Attention: Rules Docket No. 2001–SW–11–AD, 2601 Meacham Blvd., Room 663, Fort Worth, Texas 76137. You may also send comments electronically to the Rules Docket at the following address: *9-asw-adcomments@faa.gov.*

FOR FURTHER INFORMATION CONTACT: Jim Grigg, Aviation Safety Engineer, FAA, Rotorcraft Directorate, Regulations Group, Fort Worth, Texas 76193–0110, telephone (817) 222–5490, fax (817) 222–5961.

SUPPLEMENTARY INFORMATION: The Direction Generale De L'Aviation Civile (DGAC), the airworthiness authority for France, notified us that an unsafe condition may exist on Eurocopter France Model AS332L2 helicopters. The DGAC advises of cracks on the right-hand (RH) side of main frame 5295.

Eurocopter France has issued Alert Telex No. 53.01.28 R4, dated July 11, 2001 (Telex). This Telex specifies checking main frame 5295 and repairing any unairworthy main frame. The DGAC classified this Telex as mandatory and issued AD No. 2000–463–016(A), R4, dated September 5, 2001, to ensure the continued airworthiness of these helicopters in France.

We have identified an unsafe condition that is likely to exist or develop on other helicopters of the same type design should they become registered in the United States. This AD is being issued to prevent failure of the main frame and subsequent loss of control of the helicopter. This AD requires inspecting main frame 5295 within specified intervals and, before further flight, repairing any unairworthy main frame.

None of the helicopters affected by this action are on the U.S. Register. Non-U.S. operators under foreign registry currently operate all helicopters included in the applicability of this rule and, therefore, are not directly affected by this AD action. However, the FAA considers that this rule is necessary to ensure that the unsafe condition is addressed in the event that any of these subject helicopters are imported and placed on the U.S. Register in the future.

Should an affected helicopter be imported and placed on the U.S. Register in the future, it would require approximately 8 work hours to inspect main frame 5295 at an average labor rate of $60 per work hour. Based on these figures, the cost impact of this AD would be $480 to inspect each helicopter, assuming no crack was found.

Since this AD action does not affect any helicopter that is currently on the U.S. register, it has no adverse economic impact and imposes no additional burden on any person. Therefore, notice and public procedures hereon are unnecessary and the amendment may be made effective in less than 30 days after publication in the **Federal Register**.

Comments Invited

Although this action is in the form of a final rule that involves requirements affecting flight safety and, thus, was not preceded by notice and an opportunity for public comment, comments are invited on this rule. Interested persons are invited to comment on this rule by submitting such written data, views, or arguments as they may desire. Communications should identify the Rules Docket number and be submitted in triplicate to the address specified under the caption **ADDRESSES.** All communications received on or before the closing date for comments will be considered, and this rule may be amended in light of the comments received. Factual information that supports the commenter's ideas and suggestions is extremely helpful in evaluating the effectiveness of the AD action and determining whether additional rulemaking action would be needed.

Comments are specifically invited on the overall regulatory, economic, environmental, and energy aspects of the rule that might suggest a need to modify the rule. All comments submitted will be available in the Rules Docket for examination by interested persons. A report that summarizes each FAA-public contact concerned with the substance of this AD will be filed in the Rules Docket.

The regulations adopted herein will not have a substantial direct effect on the States, on the relationship between the national Government and the States, or on the distribution of power and responsibilities among the various levels of government. Therefore, it is determined that this final rule does not have federalism implications under Executive Order 13132.

The FAA has determined that notice and prior public comment are unnecessary in promulgating this regulation; therefore, it can be issued immediately to correct an unsafe condition in aircraft since none of these model helicopters are registered in the United States. The FAA has also determined that this regulation is not a ''significant regulatory action'' under Executive Order 12866. It has been determined further that this action involves an emergency regulation under DOT Regulatory Policies and Procedures (44 FR 11034, February 26, 1979). If it is determined that this emergency regulation otherwise would be significant under DOT Regulatory Policies and Procedures, a final regulatory evaluation will be prepared and placed in the Rules Docket. A copy of it, if filed, may be obtained from the Rules Docket at the location provided under the caption **ADDRESSES.**

List of Subjects in 14 CFR Part 39

Air transportation, Aircraft, Aviation safety, Safety.

Adoption of the Amendment

Accordingly, pursuant to the authority delegated to me by the Administrator, the Federal Aviation Administration amends part 39 of the Federal Aviation Regulations (14 CFR part 39) as follows:

PART 39—AIRWORTHINESS DIRECTIVES

1. The authority citation for part 39 continues to read as follows:

Authority: 49 U.S.C. 106(g), 40113, 44701.

§ 39.13 [Amended]

2. Section 39.13 is amended by adding a new airworthiness directive to read as follows:

2002–01–06 Eurocopter France: Amendment 39–12597. Docket No. 2001–SW–11–AD.

Applicability: Model AS332L2 helicopters, certificated in any category.

Note 1: This AD applies to each helicopter identified in the preceding applicability provision, regardless of whether it has been otherwise modified, altered, or repaired in the area subject to the requirements of this AD. For helicopters that have been modified, altered, or repaired so that the performance of the requirements of this AD is affected, the owner/operator must request approval for an alternative method of compliance in accordance with paragraph (d) of this AD. The request should include an assessment of the effect of the modification, alteration, or repair on the unsafe condition addressed by this AD; and if the unsafe condition has not been eliminated, the request should include specific proposed actions to address it.

Compliance: Required as indicated, unless accomplished previously. To prevent failure of main frame 5295 and subsequent loss of control of the helicopter, accomplish the following:

(a) Within the next 50 hours time-in-service (TIS) for helicopters with 5000 or more hours TIS and before accumulating 5050 hours TIS for helicopters with less than 5000 hours TIS,

(1) At main frame 5295, remove the trim from the horizontal members at Z1350 on both sides of the helicopter.

(2) Visually inspect for a crack:

(i) Above the horizontal members at Z1350.

(ii) At the blending radii of the attachment ribs of the horizontal members below Z1350.

(b) After accomplishing paragraph (a) of this AD, thereafter, at intervals not to exceed 200 hours TIS, repeat the visual inspection required by paragraph (a) of this AD.

(c) Repair any unairworthy main frame 5295 before further flight.

Note 2: Eurocopter France Alert Telex No. 53.01.28 R4, dated July 11, 2001, pertains to the subject of this AD.

(d) An alternative method of compliance or adjustment of the compliance time that provides an acceptable level of safety may be used if approved by the Manager, Regulations Group, Rotorcraft Directorate, FAA. Operators shall submit their requests through an FAA Principal Maintenance Inspector, who may concur or comment and then send it to the Manager, Regulations Group.

Note 3: Information concerning the existence of approved alternative methods of compliance with this AD, if any, may be obtained from the Regulations Group.

(e) Special flight permits may be issued in accordance with 14 CFR 21.197 and 21.199 to operate the helicopter to a location where the requirements of this AD can be accomplished.

(f) This amendment becomes effective on January 31, 2002.

Note 4: The subject of this AD is addressed in Direction Generale De L'Aviation Civile (France) AD No. 2000–463–016(A), R4, dated September 5, 2001.

Issued in Fort Worth, Texas, on January 4, 2002.

David A. Downey,

Manager, Rotorcraft Directorate, Aircraft Certification Service.

[FR Doc. 02–1056 Filed 1–15–02; 8:45 am]

BILLING CODE 4910–13–P

DEPARTMENT OF TRANSPORTATION

Federal Aviation Administration

14 CFR Part 71

[Airspace Docket No. 01–AEA–23FR]

Establishment of Class E Airspace; Peninsula Regional Medical Center Heliport, Fruitland, MD

AGENCY: Federal Aviation Administration (FAA), DOT.

ACTION: Final rule.

SUMMARY: This action establishes Class E airspace at Peninsula Regional Medical Center Heliport, Fruitland, MD. Development of an Area Navigation (RNAV), Helicopter RNAV331 approach, for the Peninsula Regional Medical Center Heliport, has made this action necessary. Controlled airspace extending upward from 700 feet Above Ground Level (AGL) is needed to contain aircraft executing the approach to the Peninsula Regional Medical Center Heliport.

EFFECTIVE DATE: 0901 UTC December 27, 2001.

FOR FURTHER INFORMATION CONTACT: Mr. Francis Jordan, Airspace Specialist, Airspace Branch, AEA–520, Air Traffic Division, Eastern Region, Federal Aviation Administration, 1 Aviation Plaza, Jamaica, New York 11434–4809, telephone: (718) 553–4521.

SUPPLEMENTARY INFORMATION:

History

On August 28, 2001 a notice proposing to amend part 71 of the Federal Aviation Regulation (14 CFR part 71) by establishing Class E airspace extending upward from 700 feet Above Ground Level (AGL) for an RNAV, Helicopter RNAV331 approach to the Peninsula Regional Medical Center Heliport, MD, was published in the **Federal Register** (66 FR 45199–45200).

Interested parties were invited to participate in this rulemaking proceeding by submitting written comments on the proposal to the FAA on or before September 27, 2001. No comments to the proposal were received. The rule is adopted as proposed. The coordinates for this airspace docket are based on North American Datum 83. Class E airspace areas designations for airspace extending upward from 700 feet or more above the surface of the earth are published in paragraph 6005 of FAA Order 7400.9H, dated September 1, 2000 and effective September 16, 2000, which is incorporated by reference in 14 CFR 71.1. The Class E airspace designation listed in this document will be published in the Order.

The Rule

This amendment to part 71 of the Federal Aviation Regulations (14 CFR part 71) provides controlled Class E airspace extending upward from 700 feet above the surface for aircraft conducting Instrument Flight Rules (IFR) operations at the Peninsula Regional Medical Center Heliport, Fruitland, MD.

The FAA has determined that this regulation only involves an established body of technical regulations for which frequent and routine amendments are necessary to keep them operationally current. Therefore, this regulation: (1) Is not a ''significant regulatory action'' under Executive Order 12866; (2) is not a ''significant rule'' under DOT Regulatory Policies and Procedures (44 FR 11034; February 26, 1979); and (3) does not warrant preparation of a Regulatory Evaluation as the anticipated impact is so minimal. Since this is a routine matter that will only affect air traffic procedures and air navigation it is certified that this rule will not have significant economic impact on a substantial number of small entities under the criteria of the Regulatory Flexibility Act.

List of Subjects in 14 CFR Part 71

Airspace, Incorporation by reference, Navigation (air).

Adoption of the Amendment

In consideration of the foregoing, the Federal Aviation Administration amends 14 CFR part 71 as follows:

PART 71—[AMENDED]

1. The authority citation for 14 CFR part 71 continues to read as follows:

Authority: 49 U.S.C. 106(g), 40103, 40113, 40120; EO 10854, 24 FR 9565, 3 CFR, 1959–1963 Comp., p. 389.

§ 71.1 [AMENDED]

2. The incorporation by reference in 14 CFR 71.1 of Federal Aviation Administration Order 7400.9J, Airspace Designations and Reporting Points, dated September 1, 2001 and effective September 16, 2001, is amended as follows:

Paragraph 6005 Class E airspace areas extending upward from 700 feet or more above the surface of the earth.

* * * * *

AEA MD E5, Peninsula Regional Medical Center, Fruitland, MD [NEW]

Peninsula Regional Medical Center Heliport
(Lat 38°21′26″ N., long. 75°35′34″ W.)
Point in Space Coordinates
(Lat 38°19′22″ N., long. 75°33′24″ W.)

That airspace extending upward from 700 feet above the surface within a 6 miles radius of the point in space for the SIAP to the Peninsula Regional Medical Center Heliport, Fruitland, MD.

* * * * *

Issued in Jamaica, New York on November 7, 2001.

Richard J. Ducharme,

Assistant Manager, Air Traffic Division, Eastern Region.

[FR Doc. 02–1159 Filed 1–15–02; 8:45 am]

BILLING CODE 4910–13–M

DEPARTMENT OF COMMERCE

Office of the Secretary

15 CFR Part 4a

[Docket No. 990723201–1208–02]

RIN: 0605–AA14

Public Information, Freedom of Information and Privacy; Correction

AGENCY: Department of Commerce.

ACTION: Final rule; correction.

SUMMARY: The Department of Commerce (''Department'') published in the **Federal Register** of December 20, 2001, a final rule concerning revisions of the Department's regulations regarding the Freedom of Information Act, Privacy Act, and declassification and public availability of national security information. A typographical error misidentified Part 4a of the regulations. This document corrects that error.

DATES: Effective December 20, 2001.

FOR FURTHER INFORMATION CONTACT: Andrew W. McCready, 202–482–8044

SUPPLEMENTARY INFORMATION: The Department of Commerce (''Department'') published in the **Federal Register** of December 20, 2001 (66 FR 65631), a final rule concerning revisions of the Department's regulations regarding the Freedom of Information Act, Privacy Act, and declassification and public availability of national security information. The revisions implemented the Electronic Freedom of Information Act Amendments of 1996 and Executive Order 12958, included an updated duplication fee, and streamlined, clarified and updated the regulations. At the top of the first column of page 65650 of that **Federal Register** document, it mistakenly reads ''Part 2 is revised to read as follows:'' That language is a typographical error. The revisions of the regulations referred to in that line are to Part 4a. Accordingly, change that language to read ''2. Part 4a is revised to read as follows:''

Dated: January 10, 2002.

Robert F. Kugelman,

Director, Office of Executive Budgeting and Assistance Management.

[FR Doc. 02–1074 Filed 1–15–02; 8:45 am]

BILLING CODE 3510–BW–P

POSTAL SERVICE

39 CFR Part 3

Amendments to Bylaws of the Board of Governors Concerning Establishment of the Price of Semipostal Stamps

AGENCY: Postal Service.

ACTION: Final rule.

SUMMARY: The Board of Governors of the United States Postal Service has approved an amendment to its bylaws. The amendment reserves to the Governors responsibility to set prices for semipostal stamps. A conforming amendment in wording has also been made to the bylaws.

DATES: Effective January 8, 2002.

FOR FURTHER INFORMATION CONTACT: David Hunter, (202) 268–4800.

SUPPLEMENTARY INFORMATION: The Board of Governors of the Postal Service consists of nine Presidentially appointed Governors, the Postmaster General, and the Deputy Postmaster General. 39 U.S.C. 202. The bylaws of the Board list certain matters reserved for action by the Governors alone. 39 CFR 3.4. At its meeting on January 8, 2002, the Board approved an amendment to this bylaw.

The amendment gives effect to 39 U.S.C. 416, as enacted by the Semipostal Authorization Act, Pub. L. 106–253, 114 Stat. 634 (2000). The amendment also applies to the 9/11 Heroes Stamp Act of 2001, Pub. L. 107–67, section 652, 115 Stat. 514 (2001) and the Stamp Out Domestic Violence Act of 2001, Pub. L. 107–67, section 653, 115 Stat. 514 (2001). Section 416 authorizes the Postal Service to sell semipostal stamps. The differential between the price of a semipostal stamp and the First-Class Mail single-piece first-ounce rate, less an offset for the Postal Service's costs, consists of an amount to fund causes that the ''Postal Service determines to be in the national public interest and appropriate.'' Funds are to be transferred to executive agencies as defined in 5 U.S.C. 105. Section 416 vests the Governors of the Postal Service with authority to establish the price for semipostal stamps ''in accordance with such procedures as (the Governors) shall by regulation prescribe.'' The Act prescribes that the price of a semipostal stamp is the ''rate of postage that would otherwise regularly apply,'' presumably, the First-Class single-piece first ounce rate, plus a differential. The differential associated with each semipostal stamp must exceed the postage value by at least 15 percent, and the price of each semipostal must be a multiple of 5. This is modeled on the formula prescribed by the Stamp Out Breast Cancer Act, Pub. L. No. 105–41, 111 Stat. 1119 (1997), as amended by Pub. L. 107–67, section 650, 115 Stat. 514 (2001).

In accordance with section 416, the Board amended § 3.4 of the bylaws to insert a new paragraph (j), reserving to the Governors authority to establish the price of semipostal stamps. Paragraph (i) of § 3.4, which authorizes the Governors to set the price of the breast cancer research stamp under 39 U.S.C. 414, was also amended to conform to the wording of new paragraph (j).

List of Subjects in 39 CFR Part 3

Administrative practice and procedure, Organization and functions (Government agencies), Postal service.

Accordingly, 39 CFR Part 3 is amended as follows:

PART 3—[AMENDED]

1. The authority citation for part 3 is revised to read as follows:

Authority: 39 U.S.C. 202, 203, 205, 401 (2), (10), 402, 414, 416, 1003, 2802–2804, 3013; 5 U.S.C. 552b (g), (j); Inspector General Act, 5 U.S.C. app.; Pub. L. 107–67, 115 Stat. 514 (2001).

2. Section 3.4 is amended by republishing the introductory text, revising paragraph (i), and adding new paragraph (j) to read as follows:

§ 3.4 Matters reserved for decision by the Governors.

The following matters are reserved for decision by the Governors:

* * * * *

(i) Establishment of the price of the breast cancer research semipostal stamp under 39 U.S.C. 414.

(j) Establishment of the price of semipostal stamps under 39 U.S.C. 416.

Stanley F. Mires,

Chief Counsel, Legislative.

[FR Doc. 02–1017 Filed 1–15–02; 8:45 am]

BILLING CODE 7710–12–P

DEPARTMENT OF TRANSPORTATION

Research and Special Programs Administration

49 CFR Part 195

[Docket No. RSPA–00–7408; Amdt. No. 195–76]

RIN 2137–AD49

Pipeline Safety: Pipeline Integrity Management in High Consequence Areas (Hazardous Liquid Operators With Less Than 500 Miles of Pipelines)

AGENCY: Research and Special Programs Administration (RSPA), U.S. Department of Transportation (DOT).

ACTION: Final rule.

SUMMARY: Our regulations for the transportation of hazardous liquids by pipeline require operators with 500 or more miles of regulated pipelines to establish a program for managing the integrity of pipelines that affect high consequence areas. The regulations require continual assessment and evaluation of pipeline integrity through inspection or testing, data integration and analysis, and follow-up remedial, preventive, and mitigative actions. This Final Rule extends those regulations to operators with less than 500 miles of regulated pipelines. We are taking this action because safety recommendations, statutory mandates, and accident analyses indicate that coordinated risk control measures are needed for public safety and environmental protection in addition to compliance with traditional safety standards. Broadening the coverage of the existing regulations will further enhance the protection of high consequence areas against the risk of pipeline failures.

DATES: This Final Rule takes effect February 15, 2002.

FOR FURTHER INFORMATION CONTACT: L. M. Furrow by phone at 202–366–4559, by fax at 202–366–4566, by mail at U.S. Department of Transportation, 400 Seventh Street, SW., Washington, DC 20590, or by e-mail at *buck.furrow@rspa.dot.gov*.

SUPPLEMENTARY INFORMATION:

Background

Last year we amended the regulations in 49 CFR part 195 to require each operator who owns or operates 500 or more miles of pipelines subject to part 195 to establish a program for managing the integrity of pipelines that could affect a high consequence area if a leak or rupture occurs (Docket No. RSPA–99–6355; 65 FR 75377; Dec. 1, 2000). High consequence areas include highly populated areas, areas unusually sensitive to environmental damage, and commercially navigable waterways (§ 195.450). Program standards require continual assessment, evaluation, correction, and validation of pipeline integrity (§ 195.452 and appendix C to part 195). The new standards took effect May 29, 2001 (66 FR 9532; Feb. 8, 2001). In addition, in a further rulemaking action (Docket No. RSPA–99–6355), we are revising the repair provisions of § 195.452(h) and clarifying that § 195.452 applies to carbon dioxide pipelines as well as hazardous liquid pipelines.

We did not apply the new program standards to pipelines of operators with less than 500 miles of regulated pipelines primarily because we needed more information about the potential impact of the standards on these operators. We subsequently learned that these operators include, to a large extent, companies with ample resources and capabilities to carry out the standards.

A wide range of persons who submitted comments to Docket No. RSPA–99–6355 supported the need to apply the new program standards to all operators of regulated pipelines that could affect high consequence areas. Based on these comments and the impact information we had collected, we published a Notice of Proposed Rulemaking (NPRM) to extend the program standards to pipelines of operators with less than 500 miles of regulated pipelines (66 FR 15821; March 21, 2001).

The NPRM did not propose any substantive change to the existing program standards. It merely proposed to establish later deadlines for developing programs under § 195.452(b)(1), identifying pipelines under § 195.452(b)(1)(i), completing baseline assessments under § 195.452(d)(1), accepting prior assessments under § 195.452(b)(2), and applying certain time limits on reviewing assessment results under § 195.452(h)(3). We invited interested persons to submit written comments on the proposed rules until May 21, 2001.

Although the NPRM proposed no substantive change to the program standards, in the earlier proceeding (Docket No. RSPA–99–6355), we invited comments until March 31, 2001, on the substance of the standard for remedial action (§ 195.452(h)). As indicated in the NPRM, if § 195.452(h) is changed in that proceeding, the changes will apply to all operators of pipelines to which the program standards apply, including operators covered by the present Final Rule.

Disposition of Comments

This section of the preamble summarizes written comments we received in response to the NPRM. It also describes how we treated those comments in developing the final rules. However, comments related to costs and benefits and the impact of the proposed rules on small entities are addressed in the ''Regulatory Analyses and Notices'' section of this preamble. If a proposed rule is not mentioned, no significant comments were received on the proposal, and we are adopting the proposed rule as final.

Eight persons submitted comments: a professional organization, the American Society of Safety Engineers (ASSE); a state pipeline safety agency, the Washington Utilities and Transportation Commission (WUTC); a Washington State advisory committee, the Citizens Advisory Committee on Pipeline Safety (CAC); the Small Business Administration (SBA); the Department of Energy (DOE); an engineering firm, Wink, Incorporated (Wink); and two pipeline operators, the Laclede Pipeline Company (Laclede) and the Tosco Corporation (Tosco). ASSE did not comment on specific proposals in the NPRM, but strongly supported our goal of assuring the integrity of pipeline systems. ASSE also said improving pipeline safety would improve the United States' competitive position in the world economy. WUTC, CAC, Tosco, and DOE expressed general support for the NPRM but, along with Wink, suggested changes. DOE also commented on the costs of the proposed rules in their impact on small entities. Laclede opposed the integrity assessment proposal and took issue with our estimate of compliance costs. SBA's comments were limited to the impact of the proposed rules on small entities.

Under proposed §§ 195.452(b)(1) and (b)(1)(i), operators with less than 500 miles of pipelines would have 9 months after the effective date of the final rules to identify all pipeline segments that could affect high consequence areas. They would have 1 year after the effective date to develop a written integrity management program that addresses the risks of those segments. Tosco said the identification of pipeline segments should occur after, not before, integrity management programs are completed, and suggested we allow operators 1 year to complete the identifications. In considering this comment, we noted that operators with 500 or more miles of pipelines have not indicated they expect any significant difficulties in meeting the 9-month identification rule. Tosco's comment

does not give us reason to believe the 9-month rule might be too burdensome for operators with less than 500 miles of pipelines. While Tosco is correct that operators will need to have relevant program elements in place to guide them in identifying pipeline segments, we believe 9 months is enough time to complete those elements and to carry out the identifications. The additional 3 months the existing rule provides for program development gives operators enough time to complete program elements other than those concerning identification. We do not think this additional time is also needed to identify pipeline segments.

CAC suggested we require operators to seek input from potentially affected communities in identifying high consequence areas. CAC believed the input would help operators identify areas of population at risk and areas of economic importance. Although we recognize community input is valuable in many situations involving pipelines, particularly in site selection and emergency response, we do not feel it is necessary to mandate that operators seek the input CAC envisioned for two reasons. First, the definition of ''high consequence area'' in § 195.450 covers CAC's concern about the population-at-risk. That definition refers to areas of high or concentrated population that the U.S. Census Bureau has defined and delineated. Operators should be able to identify these areas quite easily using Census Bureau data. If additional information is needed from community records to complete the identifications, the proposed rule would implicitly obligate operators to seek this information, making an explicit requirement unnecessary. Secondly, the NPRM did not propose to require integrity management of pipelines that could affect areas of economic significance other than commercially navigable waterways. These waterways, which operators also can readily identify without community input, arguably are the nation's foremost economic resources potentially at risk from pipeline spills. Other significant economic resources that may be affected by pipelines are less certain, and we feel the present regulations in Part 195 provide those resources adequate protection against the risk of pipeline spills. Similarly, in directing DOT to require additional inspection of certain pipelines, Congress did not include pipelines that affect economic resources other than commercially navigable waterways (49 U.S.C. 60102(f)(2) and 60109). If in the future there is a need to apply the integrity management rules to pipelines affecting other significant economic resources, we will consider whether operators should seek community input in identifying those resources.

Although we did not adopt CAC's recommendations, it is important to note that in a separate proceeding we are considering the need for regulations on better communication of pipeline information by operators to local officials and the public. We have formed a communications work team, consisting of representatives from environmental and public safety organizations, pipeline companies, and government to aid our own hazardous liquid pipeline safety advisory committee in examining communications issues. Notices of meetings of the work group are published in the **Federal Register**, and minutes of the meetings are posted on this Web site: *http://ops.dot.gov.*

WUTC suggested we require baseline integrity assessments of new pipelines as soon after they are constructed as possible, and for existing pipelines as soon as practicable after the final rules take effect. WUTC stated that early baseline assessment would provide the best basis for comparing subsequent assessment results. The NPRM proposed, in § 195.452(d), that operators with less than 500 miles of pipeline complete baseline assessments within 7 years after the effective date of the final rule, with half the line pipe, selected by risk, assessed within 42 months after the effective date. Alternatively, operators could use as a baseline assessment any qualified integrity assessment completed within the 5 years prior to the effective date. For newly constructed pipelines, hydrostatic testing completed as required by other regulations in Part 195 will fulfill the baseline assessment requirement. Since this testing is normally part of the construction process, it should meet WUTC's objective of early assessment. For existing pipelines, we proposed 7 years to complete baseline assessments because of the volume of assessments, the limited availability of in-line inspection tools, and the time needed to schedule pressure testing to minimize service disruptions. Although we agree with WUTC that earlier baseline assessment would be beneficial, we do not think requiring earlier baseline assessments would be reasonable under present circumstances.

To assure that only qualified persons develop integrity management programs and make program decisions, Wink suggested we require operators to use registered professional engineers with demonstrated technical pipeline expertise and experience. Wink further suggested we require operators to submit their integrity management programs for review by RSPA certified entities. We did not adopt either suggestion because to do so would go beyond the scope of the NPRM. While § 195.452(f)(8) requires operators to use persons qualified to evaluate assessment results and analyze information, the NPRM did not address specific qualifications or program review by certified entities. Based on our experience in other areas of pipeline regulation, we believe operators will use qualified engineers with pipeline experience to assist in developing integrity management programs and recommend critical decisions under the programs. Moreover, persons carrying out regulated assessment and mitigation activities on pipelines are subject to the existing qualification requirements in Subpart G of Part 195. To assure that operators carry out their programs in accordance with the rules, we will use our own engineers and technical specialists to evaluate operators' programs and require changes that may be needed for safety. This type of evaluative process has been satisfactory for other programs and plans required by Part 195. We prefer to continue this approach to assure the quality of integrity management programs rather than establish additional personnel qualifications or a new federal certification program.

Wink asked to what extent operators would have to consider potential terrorist activities in their ongoing assessments of pipeline integrity. Under one of the integrity management program requirements (§ 195.452(e)(1)), operators must schedule integrity assessments based on ''all risk factors that reflect the risk conditions on the pipeline.'' Therefore, if an operator knows or it is reasonable to anticipate that there is a threat to the integrity of the pipeline from terrorist activity, the operator must consider that risk in developing its integrity program. Since the events of September 11, 2001, we are working with DOT, the Department of Energy, the Federal Energy Regulatory Commission, and State agencies, to consider the need for minimum security standards for critical facilities.

Wink postulated that construction permit timing could interfere with an operator's ability to meet remediation deadlines. Section 195.452(h) deals with this potential problem. Under this rule, if justifiable circumstances preclude an operator from meeting specified repair deadlines, the operator may reasonably extend the repair schedule if it

temporarily reduces operating pressure to a safe level or notifies us of the delay in making a permanent repair.

Finally, Wink suggested we establish a program review process in which operators would meet with our technical specialists to examine whether the program meets applicable requirements. In response to Wink's first comment, we mentioned we will use our own engineers and technical specialists to evaluate operators' programs and require changes that may be needed for safety. We expect this review process will involve meeting with operators' representatives.

Laclede, who operates a 28-mile propane pipeline serving a gas distribution system, believed it would be unreasonable to apply the proposed integrity assessment requirement (§ 195.452(c)) to its pipeline. Laclede said the design of 70 percent of its pipeline cannot accommodate internal inspection tools, and difficulties in de-watering the line after hydrostatic testing would cause control valve and instrument freeze-ups during critical cold weather periods. Laclede suggested we exempt from internal inspection or hydrostatic testing requirements all pipelines directly serving gas distribution systems if the pipeline is cathodically protected and inspected according to our standards or is equipped with emergency flow restricting or shutdown devices. We did not adopt this comment because providing adequate cathodic protection and meeting current inspection requirements cannot assure a pipeline is free from all potentially harmful defects that internal inspection or hydrostatic testing can disclose, such as mechanical damage or fatigue cracks. Also, while emergency flow restricting or shutdown devices are useful in mitigating the consequences of a pipeline rupture, these devices do nothing to prevent ruptures, which is the purpose of periodic internal inspection or hydrostatic testing. Laclede's comment did not fully explain the particular difficulties in de-watering, or drying, its pipeline after hydrostatic testing. Drying pipelines is not an uncommon problem in the industry and not one we believe makes the proposed testing rule unreasonable. Many companies are available to provide expert drying services, using techniques that depend on operating conditions. However, if an operator's circumstances are so unusual that hydrostatic testing would result in unavoidable damage to pipeline facilities and internal inspection is not a viable alternative, the operator may apply for a waiver of the testing requirement as permitted by 49 U.S.C. 60118.

DOE was concerned that construction of new pipelines within the next few years to meet the growing demand for fossil fuels could tax available technical expertise and equipment needed to meet various assessment deadlines in the existing and proposed rules. DOE said available resources could be stretched to a point where meeting the deadlines would not be possible, or at least not possible without significantly increased costs. Therefore, DOE suggested we expand the present provisions for extending deadlines (*e.g.,* § 195.452(j)(4)) to include situations in which meeting a deadline would result in supply disruptions. We agree that by shifting resources away from new construction or shutting down vital pipelines for hydrostatic testing or repair, supply disruptions could occur. However, at this stage we believe the impact of such an eventuality is too speculative to warrant changing the rules to add supply disruption as an acceptable reason for extending deadlines. Also, over the next few years new technologies might become available that would enable acceptable integrity assessments with no effect on supply. If in the future a supply problem appears more likely, the operator involved may petition us for necessary relief or latitude under the rules.

DOE also commented on our plan to identify high consequence areas on it's National Pipeline Mapping System (NPMS) and to make the information available to the public via the Internet. DOE recommended that before implementing this plan, we fully evaluate issues of critical infrastructure protection. Indeed, we designed the NPMS with infrastructure protection issues in mind. For example, to avoid creating a tool for intentional misuse of information with tragic results, critical pipeline components and operating data would not be shown on the NPMS. However, the events of September 11, 2001, have caused even greater concern about the security of critical infrastructure systems. As a result, the NPMS no longer provides open access to pipeline-related data. These data are only available to pipeline operators and local, state, and federal government officials. More information on the availability of data and how operators and officials can access it is on the NPMS home page: http://www.npms.rspa.dot.gov.

Editing Changes

In a further rulemaking action (Docket No. RSPA–99–6355), we are revising § 195.452(h)(3) to eliminate the possibility that periods specified for reviewing integrity assessment results could cause confusion. This change to § 195.452(h)(3) eliminates the need to revise that section to cover operators with less than 500 miles of regulated pipelines. Therefore, this Final Rule does not include the NPRM's proposed change to § 195.452(h)(3).

Because this Final Rule extends the coverage of existing § 195.452 to all operators subject to part 195, there is no need to state in final § 195.452 which operators are subject to § 195.452. Therefore, we edited § 195.452(a) to describe which pipelines are covered by § 195.452 by moving relevant provisions in § 195.452(b)(1) to § 195.452(a). Section 195.452(a) now provides that § 195.452 applies to hazardous liquid and carbon dioxide pipelines that could affect a high consequence area, including pipelines located in a high consequence area unless a risk assessment effectively shows the pipeline could not affect the area.

The NPRM proposed certain compliance dates for covered pipelines that depend on whether the operator of the pipeline owns or operates 500 or more miles of regulated pipelines. Although no one commented on this approach to determining compliance dates, we now recognize the approach could have unintended results. Under the proposed approach, if the miles of regulated pipelines an operator owns or operates changes during the compliance period (through transfer, construction, or abandonment of pipelines), the compliance dates applicable to that operator's covered pipelines could also change. For example, if an operator currently subject to § 195.452 were to reduce its miles of regulated pipelines below 500 during a compliance period for covered pipelines, the operator's covered pipelines would then fall under the later compliance date applicable to operators with less than 500 miles of regulated pipelines. Likewise, covered pipelines of operators who increase their miles of regulated pipelines to 500 or more during a compliance period would become subject to earlier compliance dates. The purpose of the proposed approach to determining compliance dates was merely to establish compliance dates for pipelines covered by the NPRM that are later than the existing compliance dates in § 195.452. We did not intend that the existing or proposed compliance dates change with changes in an operator's regulated pipeline mileage. Rather, we intended to apply the existing and proposed compliance dates to covered pipelines existing on May 29, 2001 (the

effective date of existing § 195.452), depending on whether, on that date, the operator owned or operated 500 or more miles of regulated pipelines.

To clarify the application of compliance dates and to eliminate repetitive wording, final § 195.452(a) divides covered pipelines into three categories. The first category includes pipelines existing on May 29, 2001, that were owned or operated by an operator who owned or operated a total of 500 or more miles of pipeline subject to part 195. This category of pipelines is subject to the existing compliance dates in § 195.452, and will remain subject to those dates regardless of how many miles of regulated pipelines the present or future operator of the pipelines owns or operates after May 29, 2001. The second category includes pipelines existing on May 29, 2001, that were owned or operated on that date by an operator who owned or operated less than 500 miles of pipeline subject to part 195. This category of pipelines is subject to the later compliance dates proposed in the NPRM for operators with less than 500 miles of regulated pipelines. Like the first category, the compliance dates applicable to the second category of pipelines do not depend on how many miles of regulated pipelines the present or future operator of the pipelines owns or operates after May 29, 2001. The third category of covered pipelines includes pipelines constructed or converted after May 29, 2001. Because these pipelines are not subject to the existing or proposed compliance dates, we have added appropriate dates to §§ 195.452(b)(1), (b)(2)(i), (d)(1), and (h)(3). The dates in paragraphs (b)(1) and (h)(3) provide compliance periods equivalent to periods allowed for Category 1 or 2 pipelines. In paragraph (b)(2)(i), we set the date as the date the pipeline begins operation, because operators should not need any longer time to identify a new or converted pipeline as a covered pipeline. The date the pipeline begins operation is also the compliance date in paragraph (d)(1), because the hydrostatic test part 195 requires on new and converted pipelines before operation will serve as the baseline assessment.

Advisory Committee Consideration

We presented the NPRM for consideration by the Technical Hazardous Liquid Pipeline Safety Standards Committee (THLPSSC) at a meeting in Washington, DC on August 13, 2001 (66 FR 35505; July 5, 2001). The THLPSSC is RSPA's statutory advisory committee for hazardous liquid pipeline safety. The committee has 15 members, representing industry, government, and the public. Each member is qualified to consider the technical feasibility, reasonableness, cost-effectiveness, and practicability of proposed pipeline safety standards. The committee voted unanimously to approve the rules proposed in the NPRM and the associated evaluation of costs and benefits. A transcript of the August 13 meeting is available in Docket No. RSPA–98–4470.

Regulatory Analyses and Notices

Executive Order 12866 and DOT Regulatory Policies and Procedures

We consider this Final Rule to be a non-significant regulatory action under section 3(f) of Executive Order 12866 (58 FR 51735; October 4,1993). Therefore, the Office of Management and Budget (OMB) has not received a copy of this rulemaking to review. We do not consider this rulemaking to be significant under DOT regulatory policies and procedures (44 FR 11034; Feb. 26, 1979).

This section of the preamble summarizes the findings of the Regulatory Evaluation we prepared for this Final Rule. A copy of the Regulatory Evaluation is in the docket.

Pipeline spills can adversely affect human health and the environment. However, the magnitude of this impact differs from area to area. There are some areas in which the impact of a spill will be more significant than it would be in others due to concentrations of people who could be affected or to the presence of environmental resources that are unusually sensitive to damage. Because of the potential for dire consequences of pipeline failures in certain areas, these areas merit a higher level of protection. We are promulgating this Final Rule to afford the necessary additional protection to these high consequence areas.

Last year we established 49 CFR 195.450 and 195.452, which are new requirements for additional protection of populated areas, commercially navigable waterways, and areas unusually sensitive to environmental damage from pipeline spills (65 FR 75377; Dec.1, 2000). The new requirements apply to pipeline operators who own or operate 500 or more miles of pipeline. This Final Rule extends the same requirements, with modified compliance deadlines, to the remaining operators of regulated pipelines—those that own or operate less than 500 miles of regulated pipeline.

RSPA and the National Transportation Safety Board (NTSB) have conducted many investigations that have highlighted the importance of protecting the public and environmentally sensitive areas from pipeline failures. NTSB has made several recommendations to ensure the integrity of pipelines near populated and environmentally sensitive areas. These recommendations include requiring periodic testing and inspection to identify corrosion and other damage, establishing criteria to determine appropriate intervals for inspections and tests, determining hazards to public safety from electric resistance welded pipe, and requiring installation of automatic or remotely-operated mainline valves on high-pressure lines to provide for rapid shutdown of failed pipelines.

Congress also directed DOT to undertake additional pipeline safety measures in areas of potentially high consequence. These statutory requirements call for new regulations on identifying pipelines in high density population areas, unusually sensitive environmental areas, and commercially navigable waters. They also call for new regulations on periodic inspections of pipelines in these areas with internal inspection devices, and on emergency flow restricting devices.

This Final Rule requires operators to systematically manage pipeline integrity to reduce the potential for failures that could affect high consequence areas (populated areas, unusually sensitive areas, and commercially navigable waterways). Operators must develop and follow an integrity management program to identify pipeline segments that could affect high consequence areas, and continually assess, through internal inspection, pressure testing, or equivalent alternative technology, the integrity of those segments. The program must also evaluate the segments through comprehensive information analysis, remediate integrity problems, and provide additional protection through preventive and mitigative measures, including the use of emergency flow restricting devices.

Existing §§ 195.450 and 195.452 cover an estimated 86.7 percent of the 157,000 miles of regulated hazardous liquid pipeline in the U.S. This Final Rule covers the remaining 13.3 percent. Of this percentage, we estimate this Final Rule will impact approximately 5,440 miles of pipeline. We estimate the cost to operators to develop the necessary programs at approximately $9.94 million, with an additional annual cost for program upkeep and reporting of $1.32 million. An operator's program begins with a baseline assessment plan and a framework that addresses each

required program element. The framework indicates how decisions will be made to implement each element. As decisions are made and operators evaluate the effectiveness of the program in protecting high consequence areas, the program will be updated and improved, as needed.

This Final Rule requires a baseline assessment of covered pipeline segments through internal inspection, pressure test, or use of other technology capable of equivalent performance. The baseline assessment must be completed within 7 years after this Final Rule goes into effect. After this baseline assessment, the rule further requires that operators periodically reassess and evaluate pipeline segments to ensure their integrity within a 5-year interval. We estimate the cost of periodic reassessment will generally not occur until the sixth year, unless the baseline assessment indicates significant defects that would require earlier reassessment. Integrating information related to the pipeline's integrity is a key element of the integrity management program. Costs will be incurred in realigning existing data systems to permit integration and in analysis of the integrated data by knowledgeable pipeline safety professionals. The total costs for the information integration requirements in this Final Rule are $6.6 million in the first year and $3.3 million annually thereafter.

This Final Rule requires operators to identify and take preventive or mitigative actions that would enhance public safety or environmental protection, based on a risk analysis of the pipeline segment. One preventive or mitigative action involves installing an emergency flow restricting device on the pipeline segment, if determined necessary. We could not estimate the total cost of installing emergency flow restricting devices because we do not know how many operators will install them. Another action involves evaluating leak detection capability and modifying that capability, if necessary. We do not know how many operators currently have leak detection systems or how many systems will be installed or upgraded as a result of this Final Rule. Therefore, we are unable to estimate the total costs of the leak detection requirements.

As a result of this Final Rule, we expect operators will assess more line pipe than they otherwise would assess. Integrity assessment consists of a baseline assessment, to be conducted within 7 years after the effective date of the final rule, and subsequent reassessment at intervals not to exceed every 5 years. We estimate the cost of additional baseline assessments at approximately $377,000 a year, and the cost of additional reassessments at approximately $531,000 a year. Cost impact will be greater in the sixth and seventh years after the effective date of the final rule due to an overlap between baseline inspection and the initial subsequent inspection. The additional costs in these two years are estimated at $5.26 million.

We cannot easily quantify the benefits of this Final Rule, but we can describe them qualitatively. Issuance of this Final Rule ensures that all operators will perform at least to a baseline safety level and will contribute to an overall higher level of safety and environmental performance nationwide.

The Final Rule will lead to greater uniformity in how risk is evaluated and addressed. It will also provide more clarity in discussions by government, industry and the public about safety and environmental issues, and how the issues can be resolved.

Section 195.452 is written using a performance-based approach. This approach has several advantages. First, it encourages development and use of new technologies. Secondly, it supports operators' development of more formal, structured risk-based programs. Thirdly, it supports continual evaluation of the programs by RSPA and state inspectors. And lastly, it provides greater opportunity for operators to customize their long-term maintenance programs.

Section 195.452 has stimulated the pipeline industry to develop its own consensus standard using a risk-based approach to integrity management. The rule has further fostered development of industry-wide technical standards, such as repair criteria to use following an internal inspection.

The Final Rule encourages a balanced program, addressing the range of prevention and mitigation needs and avoiding reliance on any single tool or overemphasis on any single cause of failure. A balanced program will lead to addressing the most significant risks in populated areas, unusually sensitive environmental areas, and commercially navigable waterways, thus improving industry performance in these areas.

The Final Rule requires a verification process that gives RSPA and state inspectors an opportunity to influence the methods of assessment and the interpretation of results. Government monitoring of the adequacy and implementation of this process should expedite the operators' rates of remedial action and reduce the public's exposure to risk.

A particularly significant benefit of this Final Rule involves the information that operators will gather to support decisions. Two essential elements of the integrity management program are the continual assessment and evaluation of pipeline integrity using inspection and testing technology, and the integration and analysis of all available information about the pipeline. The processes of planning, assessment, and evaluation will provide operators with better data to use in determining a pipeline's condition and the location of potential problems that must be addressed. Also, government inspectors will be able to focus on potential risks and consequences that require greater scrutiny and the need for more intensive preventive and mitigation measures.

The public has expressed concern about the danger pipelines may pose to their neighborhoods. The integrity management process leads to greater accountability to the public for both operators and DOT. This accountability is enhanced through our choice of a map-based approach to defining the areas most in need of additional protection—a visual depiction of pipelines in relation to populated areas, unusually sensitive environmental areas, and commercially navigable waterways. The system integrity requirements will assure the public that operators are continually inspecting and evaluating the threats to pipelines that pass through or close to populated areas.

We have not estimated quantitative benefits for the continual integrity management evaluation required by this Final Rule. We do not believe, however, that requiring this comprehensive process, including the reassessment of pipelines every 5 years, will be an undue burden on operators. We believe the added security this assessment will provide and the generally expedited rate of strengthening the pipeline system in high consequence areas are benefit enough to promulgate these requirements.

Laclede commented that we grossly underestimated implementation costs. Laclede notes that our estimate of the cost for all affected operators is $9.64 million, whereas Laclede expects itself to incur costs in excess of $1 million to modify its pipeline. Laclede's estimated costs are to replace piping that can not now be inspected with internal inspection devices. The rule does not require such pipe replacement, and costs for such replacement therefore were not included in the implementation cost estimate. The rule allows use of hydrostatic testing as an alternative to internal inspection. Laclede's replacement of piping to allow passage of internal inspection devices, if

undertaken, would be an operational choice based on the company's conclusion that internal inspection would be a better method of assessment than hydrostatic testing. Operators are free to make such operational choices, but they are not required by the rule, and costs associated with pipe replacement are not, therefore, a cost of implementing the rule. We fully considered the costs of hydrostatic testing in the Regulatory Evaluation.

DOE expressed concern that costs associated with shutdown time during assessment or with obtaining permits to conduct repair activities may not have been included in the Regulatory Evaluation. DOE also thought per-mile cost estimates may not be appropriate for operators with only a few miles of pipe. With respect to the impact on small entities, DOE thought the requirements could have an unreasonable impact in some cases.

The values we used to estimate costs for internal inspection and hydrostatic testing were based on detailed studies of both methods that considered all relevant costs. The outcome of those studies are per-mile estimates for conducting assessments. We recognize that costs may be higher for operators that have only a few miles of pipeline, and for whom ''fixed'' costs of assessment would be amortized over just a few miles. However, we are unable to estimate how many operators may be so affected. Many of the operators subject to this Final Rule are parts of larger companies, as described further in response to Small Business Administration comments, and should not be so affected. We will work with operators who may be unusually impacted, each of whom may request a waiver from particular requirements.

While costs for permitting associated with conducting assessments were included, permitting costs associated with repairs were not estimated. No repair costs were included in the Regulatory Evaluation. This rule does impose time limits on the repair of certain types of defects. Generally, however, repair of conditions that could adversely affect the safe operation of a pipeline is already required by 49 CFR 195.401 and so is not a new requirement in this rule.

Regulatory Flexibility Act

Under the Regulatory Flexibility Act (5 U.S.C. 601 *et seq.*), we must consider whether a rulemaking would have a significant impact on a substantial number of small entities. This Final Rule covers only those operators that own or operate less than 500 miles of regulated pipeline. Because of this limitation, only 132 hazardous liquid pipeline operators, covering 13.3 percent of regulated hazardous liquid pipelines, are covered by the Final Rule.

The risks of operating pipelines are similar regardless of the size of the operating company. Accordingly, the need to protect against those risks is also similar, regardless of operator size. We agree with WUTC's comment that ''[t]he integrity of the hazardous liquid infrastructure that runs beneath our nation's cities, and crosses our public and private lands, should not be treated differently depending on the amount of pipeline owned or operated by pipeline companies.''

We established an artificial cutoff criterion of 500 miles specifically so that we could review further the potential impact and safety needs of smaller operators to see if different treatment was needed. We completed our review and concluded that different treatment was not needed. By this Final Rule, we are establishing the same integrity management requirements for operators with less than 500 miles of pipelines as we established previously for operators with more pipeline mileage. Extending the existing requirements to the remaining operators of regulated pipelines is necessary to ensure the integrity of pipelines which could, if damaged or ruptured, cause significant injury to public safety and the environment.

We preliminarily concluded that there is no disproportionate impact on small businesses, principally because the risks are the same. We examined the companies that operate less than 500 miles of pipelines. A few of these operators are ''small businesses'' (less than 1500 employees, the Small Business Administration's criterion for defining a small business in the hazardous liquid pipeline industry.) The majority, however, is not. The majority includes larger companies or divisions or subsidiaries of very large national and multi-national companies.

We estimate that 132 operators are potentially subject to the requirements of this Final Rule, because that is the number of operators who paid user fees on less than 500 miles of pipeline in the last fiscal year. This number is a conservative upper bound. Some of these operators are not, in fact, affected by this rulemaking. As noted above, many are divisions or subsidiaries of larger companies. In many cases, the parent companies have other divisions or subsidiaries that operate pipelines and, when all are considered, own or operate more than 500 miles of such pipeline. Those companies, including all their divisions and subsidiaries which may, themselves, operate less than 500 miles of pipeline, are covered by existing § 195.452 and not by this Final Rule. In addition, this Final Rule only covers pipeline segments that could affect a high consequence area. It is possible that some operators, particularly those with only a few miles of pipe, may not operate any segments that could affect such areas. If so, those operators would not be covered by this Final Rule. Nevertheless, we continue to estimate costs on the basis of 132 covered companies, in order to provide a conservative estimate.

SBA thought the NPRM's discussion of the Regulatory Flexibility Act was inadequate. The discussion did not include background and basis information that was in the previous rulemaking applicable to operators with 500 or more miles of regulated pipeline. However, in the present document we have improved our discussion of Regulatory Flexibility Act issues to describe more clearly the basis for concluding that this Final Rule does not disproportionately affect small businesses. SBA's comments are also discussed in detail in the final Regulatory Evaluation, included in the docket.

Therefore, based on the facts available about the anticipated impacts of this rulemaking, I certify, pursuant to section 605 of the Regulatory Flexibility Act (5 U.S.C. 605), that this Final Rule will not have a significant impact on a substantial number of small entities.

Paperwork Reduction Act

This Final Rule contains information collection requirements. As required by the Paperwork Reduction Act of 1995 (44 U.S.C. 3507(d)), we have submitted a copy of the Paperwork Reduction Act Analysis to the OMB for review. The name of the information collection is ''Pipeline Integrity Management in High Consequence Areas for Operators with less than 500 miles of pipeline.'' The purpose of this information collection is designed to require operators of pipelines to develop a program to provide direct integrity testing and evaluation of pipelines in high consequence areas.

No comment submitted in response to the NPRM addressed the information collection requirements.

One hundred and thirty-two operators of hazardous liquid pipelines will be potentially subject to this Final Rule. We estimate that those operators will have to develop integrity management programs taking approximately 2,800 hours per program. Each of the operators will also have to devote 1,000 hours in the first year to integrate data

into current management information systems.

Additionally, under this Final Rule, operators will have to update their integrity management programs on a continual basis. We estimate updates will take approximately 330 hours per program, annually. An additional 500 hours per operator is estimated for the requirement to annually integrate data into the operator's current management information systems.

Under the Final Rule, operators may use either hydrostatic testing or an internal inspection tool as a method to assess their pipelines. However, operators may use another technology if they can demonstrate it provides an equivalent understanding of the condition of the line pipe as the other two assessment methods. Operators have to provide RSPA 90-days notice (by mail or facsimile) before using the other technology. We believe that few operators will choose this option. If they do choose an alternative technology, notice preparation should take approximately 1 hour. Because we believe few if any operators will elect to use other technologies, the burden was considered minimal and therefore not calculated.

Additionally, the Final Rule allows operators in particular situations to vary from the 5-year continual reassessment interval or repair schedule if they can provide the necessary justification and supporting documentation. Advance notice would have to be provided to RSPA if an operator does so. The advance notification can be in the form of letter or fax. We believe the burden of a letter or fax is minimal and therefore did not add it to the overall burden hours discussed above.

Organizations and individuals desiring to submit comments on the information collection should direct them to: The Office of Management and Budget, Office of Information and Regulatory Affairs, ATTN: RSPA Desk Officer, 727 Jackson Place, NW, Washington, DC 20503. Please provide the docket number of this action. Comments must be sent within 30 days of the publication of this Final Rule.

OMB is specifically interested in the following issues concerning the information collection:

1. Evaluating whether the collection is necessary for the proper performance of the functions of DOT, including whether the information would have a practical use;

2. Evaluating the accuracy of DOT's estimate of the burden of the collection of information, including the validity of assumptions used;

3. Enhancing the quality, usefulness and clarity of the information to be collected; and minimizing the burden of collection of information on those who are to respond, including through the use of appropriate automated electronic, mechanical, or other technological collection techniques or other forms of information technology; *e.g.,* permitting electronic submission of responses.

According to the Paperwork Reduction Act of 1995, no persons are required to respond to a collection of information unless a valid OMB control number is displayed. The OMB control number for this information collection is 2137–0605.

Executive Order 13084

This Final Rule has been analyzed in accordance with the principles and criteria contained in Executive Order 13084 (''Consultation and Coordination with Indian Tribal Governments''). Because this proposed rule does not significantly or uniquely affect the communities of the Indian tribal governments and does not impose substantial direct compliance costs, the funding and consultation requirements of Executive Order 13084 do not apply.

Executive Order 13132

This Final Rule has been analyzed in accordance with the principles and criteria contained in Executive Order 13132 (''Federalism''). This Final Rule does not adopt any regulation that: (1) Has substantial direct effects on the States, the relationship between the national government and the States, or the distribution of power and responsibilities among the various levels of government; (2) imposes substantial direct compliance costs on state and local governments; or (3) preempts state law. Therefore, the consultation and funding requirements of Executive Order 13132 (64 FR 43255, Aug. 10, 1999) do not apply. In a public meeting we held on November 18–19, 1999, we invited the National Association of Pipeline Safety Representatives (NAPSR), which includes State pipeline safety regulators, to participate in a general discussion on pipeline integrity. Again in January, and February 2000, we held conference calls with NAPSR, to receive its input before proposing an integrity management rule.

Impact on Business Processes and Computer Systems

We do not want to impose new requirements that would mandate business process changes when the resources necessary to implement those requirements would otherwise be applied to ''Y2K'' or related computer problems. This Final Rule does not mandate business process changes or require modifications to computer systems. Because the final rules will not affect the ability of organizations to respond to those problems, we are not delaying the effectiveness of the requirements.

Unfunded Mandates Reform Act of 1995

This Final Rule does not impose unfunded mandates under the Unfunded Mandates Reform Act of 1995. It does not result in costs of $100 million or more to either state, local, or tribal governments, in the aggregate, or to the private sector, and is the least burdensome alternative that achieves the objective of the NPRM.

National Environmental Policy Act

We have analyzed the Final Rule in accordance with section 102(2)(c) of the National Environmental Policy Act (42 U.S.C. 4332), the Council on Environmental Quality regulations (40 CFR parts 1500–1508), and DOT Order 5610.1D. We have determined that this action will not significantly affect the quality of the human environment.

The Environmental Assessment (available in the Docket) determined that the combined impacts of the initial baseline assessment (pressure testing or internal inspection), the subsequent periodic assessments, and additional preventive and mitigative measures that may be implemented to protect high consequence areas will result in positive environmental impacts. The number of incidents and the environmental damage from failures in and near high consequence areas are likely to be reduced. However, from a national perspective, the impact is not expected to be significant for the pipeline operators covered by the Final Rule. The following discussion summarizes the analysis provided in the Environmental Assessment.

Many operators covered by the Final Rule (those operating less than 500 miles of regulated pipeline) already have internal inspection and pressure testing programs that cover most, if not all, of their pipeline systems. These operators typically place a high priority on the pipeline's proximity to populated areas, commercially navigable waterways, and environmental resources when making decisions about where and when to inspect and test pipelines. As a result, some high consequence areas have already been recently assessed, and a large fraction of remaining locations would probably have been assessed in the next several years without the Final Rule. The most tangible impact will be to ensure

assessments are performed for those line segments that could affect a high consequence area that are not currently being internally inspected or pressure tested, and ensuring that integrity is maintained through an integrity management program that requires periodic assessments in these locations. Because hazardous liquid pipeline failure rates are low, and because the total pipeline mileage operated by operators with less than 500 miles of pipeline that could affect high consequence areas is small, the Final Rule has only a small effect on the likelihood of pipeline failure in these locations.

The Final Rule will result in more frequent integrity assessments of line segments that could affect high consequence areas than most operators are currently conducting (due to the 5-year interval required for periodic assessment). However, if the operator identifies and repairs significant problems discovered during the baseline inspection, and has in place solid risk controls to prevent corrosion and other threats, as they must, the benefits of assessing every 5 years versus the longer intervals operators more typically employ are not expected to be significant.

The Final Rule requires operators to conduct an integrated evaluation of all potential threats to pipeline integrity, and to consider and take preventive or mitigative risk control measures to provide enhanced protection. If there is a vulnerability to a particular failure cause, like third-party damage, these evaluations should identify additional risk controls to address these threats. Some operators covered by the Final Rule already perform integrity evaluations or formal risk assessments that consider the environmental sensitivity and impacts on population. These evaluations have already led to additional risk controls beyond existing requirements to improve protection for these locations. For these operators, it is expected that additional risk controls will be limited and customized to site-specific conditions that the operator may not have previously recognized.

Finally, an important, although less tangible, benefit of the Final Rule will be to establish requirements for operator integrity management programs that assure a more comprehensive and integrated evaluation of pipeline system integrity in high consequence areas. In effect, this will codify and bring an appropriate level of uniformity to the integrity management programs some operators are currently implementing. It will also require operators who have limited, or no, integrity management programs to raise their level of performance.

We expect this Final Rule to provide a more consistent, and overall, a higher level of protection for high consequence areas across the nation. Even though there is a benefit, we have concluded that it is not significant, and, therefore, have issued a finding of no significant impact.

Executive Order 13211

This rulemaking is not a ''Significant energy action'' under Executive Order 13211. It is not a significant regulatory action under Executive Order 12866 and is not likely to have a significant adverse effect on the supply, distribution, or use of energy. Further, this rulemaking has not been designated by the Administrator of the Office of Information and Regulatory Affairs as a significant energy action.

List of Subjects in 49 CFR Part 195

Carbon dioxide, Petroleum, Pipeline safety, Reporting and recordkeeping requirements.

In consideration of the foregoing, we are amending 49 CFR part 195 as follows:

PART 195—TRANSPORTATION OF HAZARDOUS LIQUIDS BY PIPELINE

1. The authority citation for part 195 continues to read as follows:

Authority: 49 U.S.C. 5103, 60102, 60104, 60108, 60109, 60118; and 49 CFR 1.53.

Subpart F—Operation and Maintenance

2. In § 195.452, paragraphs (a), (b), (d) heading, (d)(1), and (d)(2) are revised and paragraph (d) introductory text is added to read as follows:

§ 195.452 Pipeline integrity management in high consequence areas.

(a) *Which pipelines are covered by this section?* This section applies to each hazardous liquid pipeline and carbon dioxide pipeline that could affect a high consequence area, including any pipeline located in a high consequence area unless the operator effectively demonstrates by risk assessment that the pipeline could not affect the area. (Appendix C of this part provides guidance on determining if a pipeline could affect a high consequence area.) Covered pipelines are categorized as follows:

(1) Category 1 includes pipelines existing on May 29, 2001, that were owned or operated by an operator who owned or operated a total of 500 or more miles of pipeline subject to this part.

(2) Category 2 includes pipelines existing on May 29, 2001, that were owned or operated by an operator who owned or operated less than 500 miles of pipeline subject to this part.

(3) Category 3 includes pipelines constructed or converted after May 29, 2001.

(b) *What program and practices must operators use to manage pipeline integrity?* Each operator of a pipeline covered by this section must:

(1) Develop a written integrity management program that addresses the risks on each segment of pipeline in the first column of the following table not later than the date in the second column:

Pipeline	Date
Category 1	March 31, 2002.
Category 2	February 18, 2003.
Category 3	1 year after the date the pipeline begins operation.

(2) Include in the program an identification of each pipeline or pipeline segment in the first column of the following table not later than the date in the second column:

Pipeline	Date
Category 1	December 31, 2001.
Category 2	November 18, 2002.
Category 3	Date the pipeline begins operation.

(3) Include in the program a plan to carry out baseline assessments of line pipe as required by paragraph (c) of this section.

(4) Include in the program a framework that—

(i) Addresses each element of the integrity management program under paragraph (f) of this section, including continual integrity assessment and evaluation under paragraph (j) of this section; and

(ii) Initially indicates how decisions will be made to implement each element.

(5) Implement and follow the program.

(6) Follow recognized industry practices in carrying out this section, unless—

(i) This section specifies otherwise; or

(ii) The operator demonstrates that an alternative practice is supported by a reliable engineering evaluation and provides an equivalent level of public safety and environmental protection.

* * * * *

(d) *When must operators complete baseline assessments?* Operators must complete baseline assessments as follows:

(1) *Time periods.* Complete assessments before the following deadlines:

If the pipeline is:	Then complete baseline assessments not later than the following date according to a schedule that prioritizes assessments:	And assess at least 50 percent of the line pipe on an expedited basis, beginning with the highest risk pipe, not later than:
Category 1	March 31, 2008	September 30, 2004.
Category 2	February 17, 2009	August 16, 2005.
Category 3	Date the pipeline begins operation	Not applicable.

(2) *Prior assessment.* To satisfy the requirements of paragraph (c)(1)(i) of this section for pipelines in the first column of the following table, operators may use integrity assessments conducted after the date in the second column, if the integrity assessment method complies with this section. However, if an operator uses this prior assessment as its baseline assessment, the operator must reassess the line pipe according to paragraph (j)(3) of this section. The table follows:

Pipeline	Date
Category 1	January 1, 1996.
Category 2	December 18, 2006.

* * * * *

Issued in Washington, DC, on January 8, 2002.

Ellen G. Engleman,

Administrator.

[FR Doc. 02–858 Filed 1–15–02; 8:45 am]

BILLING CODE 4910–60–P

Rules and Regulations

Federal Register
Vol. 67, No. 11
Wednesday, January 16, 2002

This section of the FEDERAL REGISTER contains regulatory documents having general applicability and legal effect, most of which are keyed to and codified in the Code of Federal Regulations, which is published under 50 titles pursuant to 44 U.S.C. 1510.

The Code of Federal Regulations is sold by the Superintendent of Documents. Prices of new books are listed in the first FEDERAL REGISTER issue of each week.

DEPARTMENT OF AGRICULTURE

Commodity Credit Corporation

7 CFR Part 1410

RIN 0560–AG37

Conservation Reserve Program—Good Faith Reliance and Excessive Rainfall

AGENCY: Farm Service Agency and Commodity Credit Corporation, USDA.

ACTION: Final rule.

SUMMARY: This rule amends the Conservation Reserve Program (CRP) regulations to provide, under certain conditions, for equitable relief to producers who violated their contract based on a good faith reliance on the action or advice of certain USDA representatives. It also provides that CRP contracts will not be terminated for failure to plant cover when that failure was due to excess rainfall or flooding.

DATES: This regulation is effective January 16, 2002.

FOR FURTHER INFORMATION CONTACT: Mr. James Michaels, (202) 720–8774, or via e-mail at: *crprule@wdc.usda.gov* or on the FSA web page at *http://www.fsa/usda/gov/.*

SUPPLEMENTARY INFORMATION:

Executive Order 12866

This final rule has been determined to be not significant and, therefore, was not reviewed by the Office of Management and Budget (OMB).

Regulatory Flexibility Act

It has been determined that the Regulatory Flexibility Act is not applicable to this rule because the Commodity Credit Corporation (CCC) is not required by 5 U.S.C. 553 or any other provision of law to publish a notice of proposed rulemaking with respect to the subject matter of this rule.

Environmental Evaluation

In accordance with 7 CFR part 799, an environmental assessment was conducted to determine whether the actions included in this final rule would significantly affect the quality of the human environment. A determination was made that the actions of this final rule would have no significant impact on the human environment and the preparation of an Environmental Impact Statement is not necessary.

Executive Order 12988

This final rule has been reviewed in accordance with Executive Order 12988. This final rule is not retroactive and does not pre-empt State laws. Before any judicial action may be taken with respect to the provisions of the final rule, administrative remedies at 7 CFR parts 11 and 780 must be exhausted.

Executive Order 12372

This program is not subject to the provisions of Executive Order 12372, which requires intergovernmental consultation with State and local officials. See the notice related to 7 CFR part 3015, subpart V, published at 48 FR 29115 (June 24, 1983).

Unfunded Mandates

Title II of the Unfunded Mandate Reform Act of 1995 (UMRA), Public Law 104–4, establishes requirements for Federal agencies to assess the effects of their proposed and final rules with ''Federal Mandates'' that may result in expenditures to State, local, or tribal governments, in the aggregate, or the private sector, of $100 million or more in any one year. This rule contains no Federal mandates under the regulatory provisions of Title II of the UMRA for State, local, and tribal government or the private sector. Therefore, this rule is not subject to the requirements of sections 202 and 205 of the UMRA.

Federal Domestic Assistance Program

The title and number of the Federal Domestic Assistance Program, as found in the Catalog of Federal Domestic Assistance, to which this rule applies, is the Conservation Reserve Program—10.069.

Paperwork Reduction Act

The Office of Management and Budget approved the information collection requirements contained in the current regulations at 7 CFR part 1410 under provisions of 44 U.S.C. chapter 33 and OMB control number 0560–0125 was assigned. This rule will have no impact on the burden approved under that control number.

Discussion of Final Rule

The purpose of the Conservation Reserve Program (CRP) is to cost-effectively assist owners and operators in conserving and improving soil, water, and wildlife resources by converting highly erodible and other environmentally sensitive acreage normally devoted to the production of agricultural commodities to a long-term vegetative cover. CRP participants enter into contracts for 10 to 15 years in exchange for annual rental payments and cost-share assistance for installing certain conservation practices. In determining the amount of annual rental payments to be paid, CCC considers, among other things, the amount necessary to encourage owners or operators of eligible cropland to participate in the CRP. Offers are submitted in such a manner as the Secretary prescribes. Acreage is accepted into the CRP based on the eligibility requirements contained in 7 CFR part 1410.

On March 15, 2001, the Agency published a proposed rule, at 66 FR 15048. First, the rule proposed to implement section 755 of the Agriculture, Rural Development, Food and Drug Administration, and Related Agencies Appropriations Act, 2001 (the 2001 Act) (Pub. L. 106–387). The comment period ended on May 14, 2001. This law requires the Secretary to provide equitable relief to someone who violates a CRP contract if they took actions in good faith reliance on the action or advice of an authorized representative of the Secretary. If the Secretary determines that a CRP participant has been injured by such good faith reliance, the Secretary may allow that person some relief from the contract breach, as long as action is taken to correct the violation, and subject to other limitations promulgated in this rule.

The second change that CCC proposed allows the Secretary to not terminate a CRP contract for failure to establish approved vegetative cover or water cover if the failure to establish that cover was due to excessive rainfall or

flooding. Conditions for this waiver were discussed in the proposed rule.

This rule implements these two new statutory amendments by revising the CRP regulations contained in 7 CFR part 1410. These changes will help ensure that the CRP is implemented in a fair and reasonable manner, and that participants are not penalized unjustly.

Summary of Comments

CCC did not receive any comments from the public concerning the proposed rule. Three comments came from one individual who is an FSA employee in Kansas. These comments were of an administrative nature and can be addressed in internal agency procedure.

Substantive Changes From the Proposed Rule

There were no substantive changes compared to the proposed rule.

List of Subjects in 7 CFR Part 1410

Conservation Reserve Program: administrative practices and procedures, agriculture, conservation plan, grazing lands, and natural resources.

For reasons set out in the preamble, 7 CFR part 1410 is amended as follows:

PART 1410—CONSERVATION RESERVE PROGRAM

1. The authority citation for 7 CFR part 1410 continues to reads as follows:

Authority: 15 U.S.C. 714b and 714c; 16 U.S.C. 3801–3847.

2. In § 1410.2, the definition of ''violation'' is added to read as follows:

§ 1410.2 Definitions.

* * * * *

Violation means an act by the participant, either intentional or unintentional, which would cause the participant to no longer be eligible for cost-share or annual contract payments.

* * * * *

3. Section 1410.20(a) is revised to read as follows:

§ 1410.20 Obligations of participant.

* * * * *

(a) * * *

(a)(2) Implement the conservation plan, which is part of such contract, in accordance with the schedule of dates included in such conservation plan unless the Deputy Administrator determines that the participant cannot fully implement the conservation plan for reasons beyond the participant's control and CCC agrees to a modified plan. However, a contract will not be terminated for failure to establish an approved vegetative or water cover on the land if as determined by the Deputy Administrator:

(i) The failure to plant or establish such cover was due to excessive rainfall or flooding;

(ii) The land subject to the contract on which the participant could practicably plant or establish to such cover is planted or established to such cover; and

(iii) The land on which the participant was unable to plant or establish such cover is planted or established to such cover after the wet conditions that prevented the planting or establishment subside.

* * * * *

4. Section 1410.54 is revised to read as follows:

§ 1410.54 Performance based upon advice or action of the Department.

(a) The provisions of § 718.8 of this title relating to performance based upon the action or advice of a representative of the Department shall be applicable to this part, and may be considered as a basis to provide relief to persons subject to sanctions under this part to the extent that relief is not mandated by the other provisions of this section.

(b) Further, except as provided in paragraph (b) (3) of this section, and notwithstanding any other provision of this chapter, the Deputy Administrator may provide equitable relief to a participant who has entered into a contract under this chapter, and who is subsequently determined to be in violation of the contract, if the participant, in attempting to comply with the terms of the contract and enrollment requirements, took actions in good faith reliance upon the action or advice of an authorized USDA representative, as determined by the Deputy Administrator, provided:

(1) The Deputy Administrator determines that a participant has been injured by such good faith reliance, in which case, the participant may be authorized, as determined appropriate by the Deputy Administrator, to do any one or more of the following;

(i) Retain payments received under the contract;

(ii) Continue to receive payments under the contract;

(iii) Keep all or part of the land covered by the contract enrolled in the applicable program under this chapter;

(iv) Re-enroll all or part of the land covered by the contract in the applicable program under this chapter; or

(v) Any other equitable relief the Deputy Administrator deems appropriate.

(2) If relief under this section is authorized by the Deputy Administrator, the participant must take such actions as are determined by the Deputy Administrator to remedy any failure to comply with the contract.

(3) This section shall not apply to a pattern of conduct, as determined by the Deputy Administrator, in which an authorized USDA representative takes actions or provides advice with respect to a participant that the representative and the participant both know, or should have known, are inconsistent with applicable law (including regulations).

(4) Relief under this paragraph shall be available only for contracts in effect on January 1, 2000, or thereafter.

Signed at Washington, DC, on January 9, 2002.

James R. Little,

Executive Vice President, Commodity Credit Corporation.

[FR Doc. 02–1052 Filed 1–15–02; 8:45 am]

BILLING CODE 3410–05–P

DEPARTMENT OF TRANSPORTATION

Federal Aviation Administration

14 CFR Part 39

[Docket No. 2001–SW–11–AD; Amendment 39–12597; AD 2002–01–06]

RIN 2120–AA64

Airworthiness Directives; Eurocopter France Model AS332L2 Helicopters

AGENCY: Federal Aviation Administration, DOT.

ACTION: Final rule; request for comments.

SUMMARY: This amendment adopts a new airworthiness directive (AD) for Eurocopter France Model AS332L2 helicopters. This action requires inspecting the main frame for a crack and repairing any unairworthy frame before further flight. This amendment is prompted by a report of cracks on the right-hand (RH) side of a main frame. This condition, if not corrected, could result in failure of the main frame and subsequent loss of control of the helicopter.

DATES: Effective January 31, 2002.

Comments for inclusion in the Rules Docket must be received on or before March 18, 2002.

ADDRESSES: Submit comments in triplicate to the Federal Aviation

Administration (FAA), Office of the Regional Counsel, Southwest Region, Attention: Rules Docket No. 2001–SW–11–AD, 2601 Meacham Blvd., Room 663, Fort Worth, Texas 76137. You may also send comments electronically to the Rules Docket at the following address: *9-asw-adcomments@faa.gov.*

FOR FURTHER INFORMATION CONTACT: Jim Grigg, Aviation Safety Engineer, FAA, Rotorcraft Directorate, Regulations Group, Fort Worth, Texas 76193–0110, telephone (817) 222–5490, fax (817) 222–5961.

SUPPLEMENTARY INFORMATION: The Direction Generale De L'Aviation Civile (DGAC), the airworthiness authority for France, notified us that an unsafe condition may exist on Eurocopter France Model AS332L2 helicopters. The DGAC advises of cracks on the right-hand (RH) side of main frame 5295.

Eurocopter France has issued Alert Telex No. 53.01.28 R4, dated July 11, 2001 (Telex). This Telex specifies checking main frame 5295 and repairing any unairworthy main frame. The DGAC classified this Telex as mandatory and issued AD No. 2000–463–016(A), R4, dated September 5, 2001, to ensure the continued airworthiness of these helicopters in France.

We have identified an unsafe condition that is likely to exist or develop on other helicopters of the same type design should they become registered in the United States. This AD is being issued to prevent failure of the main frame and subsequent loss of control of the helicopter. This AD requires inspecting main frame 5295 within specified intervals and, before further flight, repairing any unairworthy main frame.

None of the helicopters affected by this action are on the U.S. Register. Non-U.S. operators under foreign registry currently operate all helicopters included in the applicability of this rule and, therefore, are not directly affected by this AD action. However, the FAA considers that this rule is necessary to ensure that the unsafe condition is addressed in the event that any of these subject helicopters are imported and placed on the U.S. Register in the future.

Should an affected helicopter be imported and placed on the U.S. Register in the future, it would require approximately 8 work hours to inspect main frame 5295 at an average labor rate of $60 per work hour. Based on these figures, the cost impact of this AD would be $480 to inspect each helicopter, assuming no crack was found.

Since this AD action does not affect any helicopter that is currently on the U.S. register, it has no adverse economic impact and imposes no additional burden on any person. Therefore, notice and public procedures hereon are unnecessary and the amendment may be made effective in less than 30 days after publication in the **Federal Register**.

Comments Invited

Although this action is in the form of a final rule that involves requirements affecting flight safety and, thus, was not preceded by notice and an opportunity for public comment, comments are invited on this rule. Interested persons are invited to comment on this rule by submitting such written data, views, or arguments as they may desire. Communications should identify the Rules Docket number and be submitted in triplicate to the address specified under the caption **ADDRESSES.** All communications received on or before the closing date for comments will be considered, and this rule may be amended in light of the comments received. Factual information that supports the commenter's ideas and suggestions is extremely helpful in evaluating the effectiveness of the AD action and determining whether additional rulemaking action would be needed.

Comments are specifically invited on the overall regulatory, economic, environmental, and energy aspects of the rule that might suggest a need to modify the rule. All comments submitted will be available in the Rules Docket for examination by interested persons. A report that summarizes each FAA-public contact concerned with the substance of this AD will be filed in the Rules Docket.

The regulations adopted herein will not have a substantial direct effect on the States, on the relationship between the national Government and the States, or on the distribution of power and responsibilities among the various levels of government. Therefore, it is determined that this final rule does not have federalism implications under Executive Order 13132.

The FAA has determined that notice and prior public comment are unnecessary in promulgating this regulation; therefore, it can be issued immediately to correct an unsafe condition in aircraft since none of these model helicopters are registered in the United States. The FAA has also determined that this regulation is not a ''significant regulatory action'' under Executive Order 12866. It has been determined further that this action involves an emergency regulation under DOT Regulatory Policies and Procedures (44 FR 11034, February 26, 1979). If it is determined that this emergency regulation otherwise would be significant under DOT Regulatory Policies and Procedures, a final regulatory evaluation will be prepared and placed in the Rules Docket. A copy of it, if filed, may be obtained from the Rules Docket at the location provided under the caption **ADDRESSES.**

List of Subjects in 14 CFR Part 39

Air transportation, Aircraft, Aviation safety, Safety.

Adoption of the Amendment

Accordingly, pursuant to the authority delegated to me by the Administrator, the Federal Aviation Administration amends part 39 of the Federal Aviation Regulations (14 CFR part 39) as follows:

PART 39—AIRWORTHINESS DIRECTIVES

1. The authority citation for part 39 continues to read as follows:

Authority: 49 U.S.C. 106(g), 40113, 44701.

§ 39.13 [Amended]

2. Section 39.13 is amended by adding a new airworthiness directive to read as follows:

2002–01–06 Eurocopter France: Amendment 39–12597. Docket No. 2001–SW–11–AD.

Applicability: Model AS332L2 helicopters, certificated in any category.

Note 1: This AD applies to each helicopter identified in the preceding applicability provision, regardless of whether it has been otherwise modified, altered, or repaired in the area subject to the requirements of this AD. For helicopters that have been modified, altered, or repaired so that the performance of the requirements of this AD is affected, the owner/operator must request approval for an alternative method of compliance in accordance with paragraph (d) of this AD. The request should include an assessment of the effect of the modification, alteration, or repair on the unsafe condition addressed by this AD; and if the unsafe condition has not been eliminated, the request should include specific proposed actions to address it.

Compliance: Required as indicated, unless accomplished previously. To prevent failure of main frame 5295 and subsequent loss of control of the helicopter, accomplish the following:

(a) Within the next 50 hours time-in-service (TIS) for helicopters with 5000 or more hours TIS and before accumulating 5050 hours TIS for helicopters with less than 5000 hours TIS,

(1) At main frame 5295, remove the trim from the horizontal members at Z1350 on both sides of the helicopter.

(2) Visually inspect for a crack:

(i) Above the horizontal members at Z1350.

(ii) At the blending radii of the attachment ribs of the horizontal members below Z1350.

(b) After accomplishing paragraph (a) of this AD, thereafter, at intervals not to exceed 200 hours TIS, repeat the visual inspection required by paragraph (a) of this AD.

(c) Repair any unairworthy main frame 5295 before further flight.

Note 2: Eurocopter France Alert Telex No. 53.01.28 R4, dated July 11, 2001, pertains to the subject of this AD.

(d) An alternative method of compliance or adjustment of the compliance time that provides an acceptable level of safety may be used if approved by the Manager, Regulations Group, Rotorcraft Directorate, FAA. Operators shall submit their requests through an FAA Principal Maintenance Inspector, who may concur or comment and then send it to the Manager, Regulations Group.

Note 3: Information concerning the existence of approved alternative methods of compliance with this AD, if any, may be obtained from the Regulations Group.

(e) Special flight permits may be issued in accordance with 14 CFR 21.197 and 21.199 to operate the helicopter to a location where the requirements of this AD can be accomplished.

(f) This amendment becomes effective on January 31, 2002.

Note 4: The subject of this AD is addressed in Direction Generale De L'Aviation Civile (France) AD No. 2000–463–016(A), R4, dated September 5, 2001.

Issued in Fort Worth, Texas, on January 4, 2002.

David A. Downey,

Manager, Rotorcraft Directorate, Aircraft Certification Service.

[FR Doc. 02–1056 Filed 1–15–02; 8:45 am]

BILLING CODE 4910–13–P

DEPARTMENT OF TRANSPORTATION

Federal Aviation Administration

14 CFR Part 71

[Airspace Docket No. 01–AEA–23FR]

Establishment of Class E Airspace; Peninsula Regional Medical Center Heliport, Fruitland, MD

AGENCY: Federal Aviation Administration (FAA), DOT.

ACTION: Final rule.

SUMMARY: This action establishes Class E airspace at Peninsula Regional Medical Center Heliport, Fruitland, MD. Development of an Area Navigation (RNAV), Helicopter RNAV331 approach, for the Peninsula Regional Medical Center Heliport, has made this action necessary. Controlled airspace extending upward from 700 feet Above Ground Level (AGL) is needed to contain aircraft executing the approach to the Peninsula Regional Medical Center Heliport.

EFFECTIVE DATE: 0901 UTC December 27, 2001.

FOR FURTHER INFORMATION CONTACT: Mr. Francis Jordan, Airspace Specialist, Airspace Branch, AEA–520, Air Traffic Division, Eastern Region, Federal Aviation Administration, 1 Aviation Plaza, Jamaica, New York 11434–4809, telephone: (718) 553–4521.

SUPPLEMENTARY INFORMATION:

History

On August 28, 2001 a notice proposing to amend part 71 of the Federal Aviation Regulation (14 CFR part 71) by establishing Class E airspace extending upward from 700 feet Above Ground Level (AGL) for an RNAV, Helicopter RNAV331 approach to the Peninsula Regional Medical Center Heliport, MD, was published in the **Federal Register** (66 FR 45199–45200).

Interested parties were invited to participate in this rulemaking proceeding by submitting written comments on the proposal to the FAA on or before September 27, 2001. No comments to the proposal were received. The rule is adopted as proposed. The coordinates for this airspace docket are based on North American Datum 83. Class E airspace areas designations for airspace extending upward from 700 feet or more above the surface of the earth are published in paragraph 6005 of FAA Order 7400.9H, dated September 1, 2000 and effective September 16, 2000, which is incorporated by reference in 14 CFR 71.1. The Class E airspace designation listed in this document will be published in the Order.

The Rule

This amendment to part 71 of the Federal Aviation Regulations (14 CFR part 71) provides controlled Class E airspace extending upward from 700 feet above the surface for aircraft conducting Instrument Flight Rules (IFR) operations at the Peninsula Regional Medical Center Heliport, Fruitland, MD.

The FAA has determined that this regulation only involves an established body of technical regulations for which frequent and routine amendments are necessary to keep them operationally current. Therefore, this regulation: (1) Is not a ''significant regulatory action'' under Executive Order 12866; (2) is not a ''significant rule'' under DOT Regulatory Policies and Procedures (44 FR 11034; February 26, 1979); and (3) does not warrant preparation of a Regulatory Evaluation as the anticipated impact is so minimal. Since this is a routine matter that will only affect air traffic procedures and air navigation it is certified that this rule will not have significant economic impact on a substantial number of small entities under the criteria of the Regulatory Flexibility Act.

List of Subjects in 14 CFR Part 71

Airspace, Incorporation by reference, Navigation (air).

Adoption of the Amendment

In consideration of the foregoing, the Federal Aviation Administration amends 14 CFR part 71 as follows:

PART 71—[AMENDED]

1. The authority citation for 14 CFR part 71 continues to read as follows:

Authority: 49 U.S.C. 106(g), 40103, 40113, 40120; EO 10854, 24 FR 9565, 3 CFR, 1959–1963 Comp., p. 389.

§ 71.1 [AMENDED]

2. The incorporation by reference in 14 CFR 71.1 of Federal Aviation Administration Order 7400.9J, Airspace Designations and Reporting Points, dated September 1, 2001 and effective September 16, 2001, is amended as follows:

Paragraph 6005 Class E airspace areas extending upward from 700 feet or more above the surface of the earth.

* * * * *

AEA MD E5, Peninsula Regional Medical Center, Fruitland, MD [NEW]

Peninsula Regional Medical Center Heliport
(Lat 38°21′26″ N., long. 75°35′34″ W.)
Point in Space Coordinates
(Lat 38°19′22″ N., long. 75°33′24″ W.)

That airspace extending upward from 700 feet above the surface within a 6 miles radius of the point in space for the SIAP to the Peninsula Regional Medical Center Heliport, Fruitland, MD.

* * * * *

Issued in Jamaica, New York on November 7, 2001.

Richard J. Ducharme,

Assistant Manager, Air Traffic Division, Eastern Region.

[FR Doc. 02–1159 Filed 1–15–02; 8:45 am]

BILLING CODE 4910–13–M

DEPARTMENT OF COMMERCE

Office of the Secretary

15 CFR Part 4a

[Docket No. 990723201–1208–02]

RIN: 0605–AA14

Public Information, Freedom of Information and Privacy; Correction

AGENCY: Department of Commerce.

ACTION: Final rule; correction.

SUMMARY: The Department of Commerce (''Department'') published in the **Federal Register** of December 20, 2001, a final rule concerning revisions of the Department's regulations regarding the Freedom of Information Act, Privacy Act, and declassification and public availability of national security information. A typographical error misidentified Part 4a of the regulations. This document corrects that error.

DATES: Effective December 20, 2001.

FOR FURTHER INFORMATION CONTACT: Andrew W. McCready, 202–482–8044

SUPPLEMENTARY INFORMATION: The Department of Commerce (''Department'') published in the **Federal Register** of December 20, 2001 (66 FR 65631), a final rule concerning revisions of the Department's regulations regarding the Freedom of Information Act, Privacy Act, and declassification and public availability of national security information. The revisions implemented the Electronic Freedom of Information Act Amendments of 1996 and Executive Order 12958, included an updated duplication fee, and streamlined, clarified and updated the regulations. At the top of the first column of page 65650 of that **Federal Register** document, it mistakenly reads ''Part 2 is revised to read as follows:'' That language is a typographical error. The revisions of the regulations referred to in that line are to Part 4a. Accordingly, change that language to read ''2. Part 4a is revised to read as follows:''

Dated: January 10, 2002.

Robert F. Kugelman,

Director, Office of Executive Budgeting and Assistance Management.

[FR Doc. 02–1074 Filed 1–15–02; 8:45 am]

BILLING CODE 3510–BW–P

POSTAL SERVICE

39 CFR Part 3

Amendments to Bylaws of the Board of Governors Concerning Establishment of the Price of Semipostal Stamps

AGENCY: Postal Service.

ACTION: Final rule.

SUMMARY: The Board of Governors of the United States Postal Service has approved an amendment to its bylaws. The amendment reserves to the Governors responsibility to set prices for semipostal stamps. A conforming amendment in wording has also been made to the bylaws.

DATES: Effective January 8, 2002.

FOR FURTHER INFORMATION CONTACT: David Hunter, (202) 268–4800.

SUPPLEMENTARY INFORMATION: The Board of Governors of the Postal Service consists of nine Presidentially appointed Governors, the Postmaster General, and the Deputy Postmaster General. 39 U.S.C. 202. The bylaws of the Board list certain matters reserved for action by the Governors alone. 39 CFR 3.4. At its meeting on January 8, 2002, the Board approved an amendment to this bylaw.

The amendment gives effect to 39 U.S.C. 416, as enacted by the Semipostal Authorization Act, Pub. L. 106–253, 114 Stat. 634 (2000). The amendment also applies to the 9/11 Heroes Stamp Act of 2001, Pub. L. 107–67, section 652, 115 Stat. 514 (2001) and the Stamp Out Domestic Violence Act of 2001, Pub. L. 107–67, section 653, 115 Stat. 514 (2001). Section 416 authorizes the Postal Service to sell semipostal stamps. The differential between the price of a semipostal stamp and the First-Class Mail single-piece first-ounce rate, less an offset for the Postal Service's costs, consists of an amount to fund causes that the ''Postal Service determines to be in the national public interest and appropriate.'' Funds are to be transferred to executive agencies as defined in 5 U.S.C. 105. Section 416 vests the Governors of the Postal Service with authority to establish the price for semipostal stamps ''in accordance with such procedures as (the Governors) shall by regulation prescribe.'' The Act prescribes that the price of a semipostal stamp is the ''rate of postage that would otherwise regularly apply,'' presumably, the First-Class single-piece first ounce rate, plus a differential. The differential associated with each semipostal stamp must exceed the postage value by at least 15 percent, and the price of each semipostal must be a multiple of 5. This is modeled on the formula prescribed by the Stamp Out Breast Cancer Act, Pub. L. No. 105–41, 111 Stat. 1119 (1997), as amended by Pub. L. 107–67, section 650, 115 Stat. 514 (2001).

In accordance with section 416, the Board amended § 3.4 of the bylaws to insert a new paragraph (j), reserving to the Governors authority to establish the price of semipostal stamps. Paragraph (i) of § 3.4, which authorizes the Governors to set the price of the breast cancer research stamp under 39 U.S.C. 414, was also amended to conform to the wording of new paragraph (j).

List of Subjects in 39 CFR Part 3

Administrative practice and procedure, Organization and functions (Government agencies), Postal service.

Accordingly, 39 CFR Part 3 is amended as follows:

PART 3—[AMENDED]

1. The authority citation for part 3 is revised to read as follows:

Authority: 39 U.S.C. 202, 203, 205, 401 (2), (10), 402, 414, 416, 1003, 2802–2804, 3013; 5 U.S.C. 552b (g), (j); Inspector General Act, 5 U.S.C. app.; Pub. L. 107–67, 115 Stat. 514 (2001).

2. Section 3.4 is amended by republishing the introductory text, revising paragraph (i), and adding new paragraph (j) to read as follows:

§ 3.4 Matters reserved for decision by the Governors.

The following matters are reserved for decision by the Governors:

* * * * *

(i) Establishment of the price of the breast cancer research semipostal stamp under 39 U.S.C. 414.

(j) Establishment of the price of semipostal stamps under 39 U.S.C. 416.

Stanley F. Mires,

Chief Counsel, Legislative.

[FR Doc. 02–1017 Filed 1–15–02; 8:45 am]

BILLING CODE 7710–12–P

DEPARTMENT OF TRANSPORTATION

Research and Special Programs Administration

49 CFR Part 195

[Docket No. RSPA–00–7408; Amdt. No. 195–76]

RIN 2137–AD49

Pipeline Safety: Pipeline Integrity Management in High Consequence Areas (Hazardous Liquid Operators With Less Than 500 Miles of Pipelines)

AGENCY: Research and Special Programs Administration (RSPA), U.S. Department of Transportation (DOT).

ACTION: Final rule.

SUMMARY: Our regulations for the transportation of hazardous liquids by pipeline require operators with 500 or more miles of regulated pipelines to establish a program for managing the integrity of pipelines that affect high consequence areas. The regulations require continual assessment and evaluation of pipeline integrity through inspection or testing, data integration and analysis, and follow-up remedial, preventive, and mitigative actions. This Final Rule extends those regulations to operators with less than 500 miles of regulated pipelines. We are taking this action because safety recommendations, statutory mandates, and accident analyses indicate that coordinated risk control measures are needed for public safety and environmental protection in addition to compliance with traditional safety standards. Broadening the coverage of the existing regulations will further enhance the protection of high consequence areas against the risk of pipeline failures.

DATES: This Final Rule takes effect February 15, 2002.

FOR FURTHER INFORMATION CONTACT: L. M. Furrow by phone at 202–366–4559, by fax at 202–366–4566, by mail at U.S. Department of Transportation, 400 Seventh Street, SW., Washington, DC 20590, or by e-mail at *buck.furrow@rspa.dot.gov*.

SUPPLEMENTARY INFORMATION:

Background

Last year we amended the regulations in 49 CFR part 195 to require each operator who owns or operates 500 or more miles of pipelines subject to part 195 to establish a program for managing the integrity of pipelines that could affect a high consequence area if a leak or rupture occurs (Docket No. RSPA–99–6355; 65 FR 75377; Dec. 1, 2000). High consequence areas include highly populated areas, areas unusually sensitive to environmental damage, and commercially navigable waterways (§ 195.450). Program standards require continual assessment, evaluation, correction, and validation of pipeline integrity (§ 195.452 and appendix C to part 195). The new standards took effect May 29, 2001 (66 FR 9532; Feb. 8, 2001). In addition, in a further rulemaking action (Docket No. RSPA–99–6355), we are revising the repair provisions of § 195.452(h) and clarifying that § 195.452 applies to carbon dioxide pipelines as well as hazardous liquid pipelines.

We did not apply the new program standards to pipelines of operators with less than 500 miles of regulated pipelines primarily because we needed more information about the potential impact of the standards on these operators. We subsequently learned that these operators include, to a large extent, companies with ample resources and capabilities to carry out the standards.

A wide range of persons who submitted comments to Docket No. RSPA–99–6355 supported the need to apply the new program standards to all operators of regulated pipelines that could affect high consequence areas. Based on these comments and the impact information we had collected, we published a Notice of Proposed Rulemaking (NPRM) to extend the program standards to pipelines of operators with less than 500 miles of regulated pipelines (66 FR 15821; March 21, 2001).

The NPRM did not propose any substantive change to the existing program standards. It merely proposed to establish later deadlines for developing programs under § 195.452(b)(1), identifying pipelines under § 195.452(b)(1)(i), completing baseline assessments under § 195.452(d)(1), accepting prior assessments under § 195.452(b)(2), and applying certain time limits on reviewing assessment results under § 195.452(h)(3). We invited interested persons to submit written comments on the proposed rules until May 21, 2001.

Although the NPRM proposed no substantive change to the program standards, in the earlier proceeding (Docket No. RSPA–99–6355), we invited comments until March 31, 2001, on the substance of the standard for remedial action (§ 195.452(h)). As indicated in the NPRM, if § 195.452(h) is changed in that proceeding, the changes will apply to all operators of pipelines to which the program standards apply, including operators covered by the present Final Rule.

Disposition of Comments

This section of the preamble summarizes written comments we received in response to the NPRM. It also describes how we treated those comments in developing the final rules. However, comments related to costs and benefits and the impact of the proposed rules on small entities are addressed in the ''Regulatory Analyses and Notices'' section of this preamble. If a proposed rule is not mentioned, no significant comments were received on the proposal, and we are adopting the proposed rule as final.

Eight persons submitted comments: a professional organization, the American Society of Safety Engineers (ASSE); a state pipeline safety agency, the Washington Utilities and Transportation Commission (WUTC); a Washington State advisory committee, the Citizens Advisory Committee on Pipeline Safety (CAC); the Small Business Administration (SBA); the Department of Energy (DOE); an engineering firm, Wink, Incorporated (Wink); and two pipeline operators, the Laclede Pipeline Company (Laclede) and the Tosco Corporation (Tosco). ASSE did not comment on specific proposals in the NPRM, but strongly supported our goal of assuring the integrity of pipeline systems. ASSE also said improving pipeline safety would improve the United States' competitive position in the world economy. WUTC, CAC, Tosco, and DOE expressed general support for the NPRM but, along with Wink, suggested changes. DOE also commented on the costs of the proposed rules in their impact on small entities. Laclede opposed the integrity assessment proposal and took issue with our estimate of compliance costs. SBA's comments were limited to the impact of the proposed rules on small entities.

Under proposed §§ 195.452(b)(1) and (b)(1)(i), operators with less than 500 miles of pipelines would have 9 months after the effective date of the final rules to identify all pipeline segments that could affect high consequence areas. They would have 1 year after the effective date to develop a written integrity management program that addresses the risks of those segments. Tosco said the identification of pipeline segments should occur after, not before, integrity management programs are completed, and suggested we allow operators 1 year to complete the identifications. In considering this comment, we noted that operators with 500 or more miles of pipelines have not indicated they expect any significant difficulties in meeting the 9-month identification rule. Tosco's comment

does not give us reason to believe the 9-month rule might be too burdensome for operators with less than 500 miles of pipelines. While Tosco is correct that operators will need to have relevant program elements in place to guide them in identifying pipeline segments, we believe 9 months is enough time to complete those elements and to carry out the identifications. The additional 3 months the existing rule provides for program development gives operators enough time to complete program elements other than those concerning identification. We do not think this additional time is also needed to identify pipeline segments.

CAC suggested we require operators to seek input from potentially affected communities in identifying high consequence areas. CAC believed the input would help operators identify areas of population at risk and areas of economic importance. Although we recognize community input is valuable in many situations involving pipelines, particularly in site selection and emergency response, we do not feel it is necessary to mandate that operators seek the input CAC envisioned for two reasons. First, the definition of ''high consequence area'' in § 195.450 covers CAC's concern about the population-at-risk. That definition refers to areas of high or concentrated population that the U.S. Census Bureau has defined and delineated. Operators should be able to identify these areas quite easily using Census Bureau data. If additional information is needed from community records to complete the identifications, the proposed rule would implicitly obligate operators to seek this information, making an explicit requirement unnecessary. Secondly, the NPRM did not propose to require integrity management of pipelines that could affect areas of economic significance other than commercially navigable waterways. These waterways, which operators also can readily identify without community input, arguably are the nation's foremost economic resources potentially at risk from pipeline spills. Other significant economic resources that may be affected by pipelines are less certain, and we feel the present regulations in Part 195 provide those resources adequate protection against the risk of pipeline spills. Similarly, in directing DOT to require additional inspection of certain pipelines, Congress did not include pipelines that affect economic resources other than commercially navigable waterways (49 U.S.C. 60102(f)(2) and 60109). If in the future there is a need to apply the integrity management rules to pipelines affecting other significant economic resources, we will consider whether operators should seek community input in identifying those resources.

Although we did not adopt CAC's recommendations, it is important to note that in a separate proceeding we are considering the need for regulations on better communication of pipeline information by operators to local officials and the public. We have formed a communications work team, consisting of representatives from environmental and public safety organizations, pipeline companies, and government to aid our own hazardous liquid pipeline safety advisory committee in examining communications issues. Notices of meetings of the work group are published in the **Federal Register**, and minutes of the meetings are posted on this Web site: *http://ops.dot.gov.*

WUTC suggested we require baseline integrity assessments of new pipelines as soon after they are constructed as possible, and for existing pipelines as soon as practicable after the final rules take effect. WUTC stated that early baseline assessment would provide the best basis for comparing subsequent assessment results. The NPRM proposed, in § 195.452(d), that operators with less than 500 miles of pipeline complete baseline assessments within 7 years after the effective date of the final rule, with half the line pipe, selected by risk, assessed within 42 months after the effective date. Alternatively, operators could use as a baseline assessment any qualified integrity assessment completed within the 5 years prior to the effective date. For newly constructed pipelines, hydrostatic testing completed as required by other regulations in Part 195 will fulfill the baseline assessment requirement. Since this testing is normally part of the construction process, it should meet WUTC's objective of early assessment. For existing pipelines, we proposed 7 years to complete baseline assessments because of the volume of assessments, the limited availability of in-line inspection tools, and the time needed to schedule pressure testing to minimize service disruptions. Although we agree with WUTC that earlier baseline assessment would be beneficial, we do not think requiring earlier baseline assessments would be reasonable under present circumstances.

To assure that only qualified persons develop integrity management programs and make program decisions, Wink suggested we require operators to use registered professional engineers with demonstrated technical pipeline expertise and experience. Wink further suggested we require operators to submit their integrity management programs for review by RSPA certified entities. We did not adopt either suggestion because to do so would go beyond the scope of the NPRM. While § 195.452(f)(8) requires operators to use persons qualified to evaluate assessment results and analyze information, the NPRM did not address specific qualifications or program review by certified entities. Based on our experience in other areas of pipeline regulation, we believe operators will use qualified engineers with pipeline experience to assist in developing integrity management programs and recommend critical decisions under the programs. Moreover, persons carrying out regulated assessment and mitigation activities on pipelines are subject to the existing qualification requirements in Subpart G of Part 195. To assure that operators carry out their programs in accordance with the rules, we will use our own engineers and technical specialists to evaluate operators' programs and require changes that may be needed for safety. This type of evaluative process has been satisfactory for other programs and plans required by Part 195. We prefer to continue this approach to assure the quality of integrity management programs rather than establish additional personnel qualifications or a new federal certification program.

Wink asked to what extent operators would have to consider potential terrorist activities in their ongoing assessments of pipeline integrity. Under one of the integrity management program requirements (§ 195.452(e)(1)), operators must schedule integrity assessments based on ''all risk factors that reflect the risk conditions on the pipeline.'' Therefore, if an operator knows or it is reasonable to anticipate that there is a threat to the integrity of the pipeline from terrorist activity, the operator must consider that risk in developing its integrity program. Since the events of September 11, 2001, we are working with DOT, the Department of Energy, the Federal Energy Regulatory Commission, and State agencies, to consider the need for minimum security standards for critical facilities.

Wink postulated that construction permit timing could interfere with an operator's ability to meet remediation deadlines. Section 195.452(h) deals with this potential problem. Under this rule, if justifiable circumstances preclude an operator from meeting specified repair deadlines, the operator may reasonably extend the repair schedule if it

temporarily reduces operating pressure to a safe level or notifies us of the delay in making a permanent repair.

Finally, Wink suggested we establish a program review process in which operators would meet with our technical specialists to examine whether the program meets applicable requirements. In response to Wink's first comment, we mentioned we will use our own engineers and technical specialists to evaluate operators' programs and require changes that may be needed for safety. We expect this review process will involve meeting with operators' representatives.

Laclede, who operates a 28-mile propane pipeline serving a gas distribution system, believed it would be unreasonable to apply the proposed integrity assessment requirement (§ 195.452(c)) to its pipeline. Laclede said the design of 70 percent of its pipeline cannot accommodate internal inspection tools, and difficulties in de-watering the line after hydrostatic testing would cause control valve and instrument freeze-ups during critical cold weather periods. Laclede suggested we exempt from internal inspection or hydrostatic testing requirements all pipelines directly serving gas distribution systems if the pipeline is cathodically protected and inspected according to our standards or is equipped with emergency flow restricting or shutdown devices. We did not adopt this comment because providing adequate cathodic protection and meeting current inspection requirements cannot assure a pipeline is free from all potentially harmful defects that internal inspection or hydrostatic testing can disclose, such as mechanical damage or fatigue cracks. Also, while emergency flow restricting or shutdown devices are useful in mitigating the consequences of a pipeline rupture, these devices do nothing to prevent ruptures, which is the purpose of periodic internal inspection or hydrostatic testing. Laclede's comment did not fully explain the particular difficulties in de-watering, or drying, its pipeline after hydrostatic testing. Drying pipelines is not an uncommon problem in the industry and not one we believe makes the proposed testing rule unreasonable. Many companies are available to provide expert drying services, using techniques that depend on operating conditions. However, if an operator's circumstances are so unusual that hydrostatic testing would result in unavoidable damage to pipeline facilities and internal inspection is not a viable alternative, the operator may apply for a waiver of the testing requirement as permitted by 49 U.S.C. 60118.

DOE was concerned that construction of new pipelines within the next few years to meet the growing demand for fossil fuels could tax available technical expertise and equipment needed to meet various assessment deadlines in the existing and proposed rules. DOE said available resources could be stretched to a point where meeting the deadlines would not be possible, or at least not possible without significantly increased costs. Therefore, DOE suggested we expand the present provisions for extending deadlines (*e.g.,* § 195.452(j)(4)) to include situations in which meeting a deadline would result in supply disruptions. We agree that by shifting resources away from new construction or shutting down vital pipelines for hydrostatic testing or repair, supply disruptions could occur. However, at this stage we believe the impact of such an eventuality is too speculative to warrant changing the rules to add supply disruption as an acceptable reason for extending deadlines. Also, over the next few years new technologies might become available that would enable acceptable integrity assessments with no effect on supply. If in the future a supply problem appears more likely, the operator involved may petition us for necessary relief or latitude under the rules.

DOE also commented on our plan to identify high consequence areas on it's National Pipeline Mapping System (NPMS) and to make the information available to the public via the Internet. DOE recommended that before implementing this plan, we fully evaluate issues of critical infrastructure protection. Indeed, we designed the NPMS with infrastructure protection issues in mind. For example, to avoid creating a tool for intentional misuse of information with tragic results, critical pipeline components and operating data would not be shown on the NPMS. However, the events of September 11, 2001, have caused even greater concern about the security of critical infrastructure systems. As a result, the NPMS no longer provides open access to pipeline-related data. These data are only available to pipeline operators and local, state, and federal government officials. More information on the availability of data and how operators and officials can access it is on the NPMS home page: http://www.npms.rspa.dot.gov.

Editing Changes

In a further rulemaking action (Docket No. RSPA–99–6355), we are revising § 195.452(h)(3) to eliminate the possibility that periods specified for reviewing integrity assessment results could cause confusion. This change to § 195.452(h)(3) eliminates the need to revise that section to cover operators with less than 500 miles of regulated pipelines. Therefore, this Final Rule does not include the NPRM's proposed change to § 195.452(h)(3).

Because this Final Rule extends the coverage of existing § 195.452 to all operators subject to part 195, there is no need to state in final § 195.452 which operators are subject to § 195.452. Therefore, we edited § 195.452(a) to describe which pipelines are covered by § 195.452 by moving relevant provisions in § 195.452(b)(1) to § 195.452(a). Section 195.452(a) now provides that § 195.452 applies to hazardous liquid and carbon dioxide pipelines that could affect a high consequence area, including pipelines located in a high consequence area unless a risk assessment effectively shows the pipeline could not affect the area.

The NPRM proposed certain compliance dates for covered pipelines that depend on whether the operator of the pipeline owns or operates 500 or more miles of regulated pipelines. Although no one commented on this approach to determining compliance dates, we now recognize the approach could have unintended results. Under the proposed approach, if the miles of regulated pipelines an operator owns or operates changes during the compliance period (through transfer, construction, or abandonment of pipelines), the compliance dates applicable to that operator's covered pipelines could also change. For example, if an operator currently subject to § 195.452 were to reduce its miles of regulated pipelines below 500 during a compliance period for covered pipelines, the operator's covered pipelines would then fall under the later compliance date applicable to operators with less than 500 miles of regulated pipelines. Likewise, covered pipelines of operators who increase their miles of regulated pipelines to 500 or more during a compliance period would become subject to earlier compliance dates. The purpose of the proposed approach to determining compliance dates was merely to establish compliance dates for pipelines covered by the NPRM that are later than the existing compliance dates in § 195.452. We did not intend that the existing or proposed compliance dates change with changes in an operator's regulated pipeline mileage. Rather, we intended to apply the existing and proposed compliance dates to covered pipelines existing on May 29, 2001 (the

effective date of existing § 195.452), depending on whether, on that date, the operator owned or operated 500 or more miles of regulated pipelines.

To clarify the application of compliance dates and to eliminate repetitive wording, final § 195.452(a) divides covered pipelines into three categories. The first category includes pipelines existing on May 29, 2001, that were owned or operated by an operator who owned or operated a total of 500 or more miles of pipeline subject to part 195. This category of pipelines is subject to the existing compliance dates in § 195.452, and will remain subject to those dates regardless of how many miles of regulated pipelines the present or future operator of the pipelines owns or operates after May 29, 2001. The second category includes pipelines existing on May 29, 2001, that were owned or operated on that date by an operator who owned or operated less than 500 miles of pipeline subject to part 195. This category of pipelines is subject to the later compliance dates proposed in the NPRM for operators with less than 500 miles of regulated pipelines. Like the first category, the compliance dates applicable to the second category of pipelines do not depend on how many miles of regulated pipelines the present or future operator of the pipelines owns or operates after May 29, 2001. The third category of covered pipelines includes pipelines constructed or converted after May 29, 2001. Because these pipelines are not subject to the existing or proposed compliance dates, we have added appropriate dates to §§ 195.452(b)(1), (b)(2)(i), (d)(1), and (h)(3). The dates in paragraphs (b)(1) and (h)(3) provide compliance periods equivalent to periods allowed for Category 1 or 2 pipelines. In paragraph (b)(2)(i), we set the date as the date the pipeline begins operation, because operators should not need any longer time to identify a new or converted pipeline as a covered pipeline. The date the pipeline begins operation is also the compliance date in paragraph (d)(1), because the hydrostatic test part 195 requires on new and converted pipelines before operation will serve as the baseline assessment.

Advisory Committee Consideration

We presented the NPRM for consideration by the Technical Hazardous Liquid Pipeline Safety Standards Committee (THLPSSC) at a meeting in Washington, DC on August 13, 2001 (66 FR 35505; July 5, 2001). The THLPSSC is RSPA's statutory advisory committee for hazardous liquid pipeline safety. The committee has 15 members, representing industry, government, and the public. Each member is qualified to consider the technical feasibility, reasonableness, cost-effectiveness, and practicability of proposed pipeline safety standards. The committee voted unanimously to approve the rules proposed in the NPRM and the associated evaluation of costs and benefits. A transcript of the August 13 meeting is available in Docket No. RSPA–98–4470.

Regulatory Analyses and Notices

Executive Order 12866 and DOT Regulatory Policies and Procedures

We consider this Final Rule to be a non-significant regulatory action under section 3(f) of Executive Order 12866 (58 FR 51735; October 4,1993). Therefore, the Office of Management and Budget (OMB) has not received a copy of this rulemaking to review. We do not consider this rulemaking to be significant under DOT regulatory policies and procedures (44 FR 11034; Feb. 26, 1979).

This section of the preamble summarizes the findings of the Regulatory Evaluation we prepared for this Final Rule. A copy of the Regulatory Evaluation is in the docket.

Pipeline spills can adversely affect human health and the environment. However, the magnitude of this impact differs from area to area. There are some areas in which the impact of a spill will be more significant than it would be in others due to concentrations of people who could be affected or to the presence of environmental resources that are unusually sensitive to damage. Because of the potential for dire consequences of pipeline failures in certain areas, these areas merit a higher level of protection. We are promulgating this Final Rule to afford the necessary additional protection to these high consequence areas.

Last year we established 49 CFR 195.450 and 195.452, which are new requirements for additional protection of populated areas, commercially navigable waterways, and areas unusually sensitive to environmental damage from pipeline spills (65 FR 75377; Dec.1, 2000). The new requirements apply to pipeline operators who own or operate 500 or more miles of pipeline. This Final Rule extends the same requirements, with modified compliance deadlines, to the remaining operators of regulated pipelines—those that own or operate less than 500 miles of regulated pipeline.

RSPA and the National Transportation Safety Board (NTSB) have conducted many investigations that have highlighted the importance of protecting the public and environmentally sensitive areas from pipeline failures. NTSB has made several recommendations to ensure the integrity of pipelines near populated and environmentally sensitive areas. These recommendations include requiring periodic testing and inspection to identify corrosion and other damage, establishing criteria to determine appropriate intervals for inspections and tests, determining hazards to public safety from electric resistance welded pipe, and requiring installation of automatic or remotely-operated mainline valves on high-pressure lines to provide for rapid shutdown of failed pipelines.

Congress also directed DOT to undertake additional pipeline safety measures in areas of potentially high consequence. These statutory requirements call for new regulations on identifying pipelines in high density population areas, unusually sensitive environmental areas, and commercially navigable waters. They also call for new regulations on periodic inspections of pipelines in these areas with internal inspection devices, and on emergency flow restricting devices.

This Final Rule requires operators to systematically manage pipeline integrity to reduce the potential for failures that could affect high consequence areas (populated areas, unusually sensitive areas, and commercially navigable waterways). Operators must develop and follow an integrity management program to identify pipeline segments that could affect high consequence areas, and continually assess, through internal inspection, pressure testing, or equivalent alternative technology, the integrity of those segments. The program must also evaluate the segments through comprehensive information analysis, remediate integrity problems, and provide additional protection through preventive and mitigative measures, including the use of emergency flow restricting devices.

Existing §§ 195.450 and 195.452 cover an estimated 86.7 percent of the 157,000 miles of regulated hazardous liquid pipeline in the U.S. This Final Rule covers the remaining 13.3 percent. Of this percentage, we estimate this Final Rule will impact approximately 5,440 miles of pipeline. We estimate the cost to operators to develop the necessary programs at approximately $9.94 million, with an additional annual cost for program upkeep and reporting of $1.32 million. An operator's program begins with a baseline assessment plan and a framework that addresses each

required program element. The framework indicates how decisions will be made to implement each element. As decisions are made and operators evaluate the effectiveness of the program in protecting high consequence areas, the program will be updated and improved, as needed.

This Final Rule requires a baseline assessment of covered pipeline segments through internal inspection, pressure test, or use of other technology capable of equivalent performance. The baseline assessment must be completed within 7 years after this Final Rule goes into effect. After this baseline assessment, the rule further requires that operators periodically reassess and evaluate pipeline segments to ensure their integrity within a 5-year interval. We estimate the cost of periodic reassessment will generally not occur until the sixth year, unless the baseline assessment indicates significant defects that would require earlier reassessment. Integrating information related to the pipeline's integrity is a key element of the integrity management program. Costs will be incurred in realigning existing data systems to permit integration and in analysis of the integrated data by knowledgeable pipeline safety professionals. The total costs for the information integration requirements in this Final Rule are $6.6 million in the first year and $3.3 million annually thereafter.

This Final Rule requires operators to identify and take preventive or mitigative actions that would enhance public safety or environmental protection, based on a risk analysis of the pipeline segment. One preventive or mitigative action involves installing an emergency flow restricting device on the pipeline segment, if determined necessary. We could not estimate the total cost of installing emergency flow restricting devices because we do not know how many operators will install them. Another action involves evaluating leak detection capability and modifying that capability, if necessary. We do not know how many operators currently have leak detection systems or how many systems will be installed or upgraded as a result of this Final Rule. Therefore, we are unable to estimate the total costs of the leak detection requirements.

As a result of this Final Rule, we expect operators will assess more line pipe than they otherwise would assess. Integrity assessment consists of a baseline assessment, to be conducted within 7 years after the effective date of the final rule, and subsequent reassessment at intervals not to exceed every 5 years. We estimate the cost of additional baseline assessments at approximately $377,000 a year, and the cost of additional reassessments at approximately $531,000 a year. Cost impact will be greater in the sixth and seventh years after the effective date of the final rule due to an overlap between baseline inspection and the initial subsequent inspection. The additional costs in these two years are estimated at $5.26 million.

We cannot easily quantify the benefits of this Final Rule, but we can describe them qualitatively. Issuance of this Final Rule ensures that all operators will perform at least to a baseline safety level and will contribute to an overall higher level of safety and environmental performance nationwide.

The Final Rule will lead to greater uniformity in how risk is evaluated and addressed. It will also provide more clarity in discussions by government, industry and the public about safety and environmental issues, and how the issues can be resolved.

Section 195.452 is written using a performance-based approach. This approach has several advantages. First, it encourages development and use of new technologies. Secondly, it supports operators' development of more formal, structured risk-based programs. Thirdly, it supports continual evaluation of the programs by RSPA and state inspectors. And lastly, it provides greater opportunity for operators to customize their long-term maintenance programs.

Section 195.452 has stimulated the pipeline industry to develop its own consensus standard using a risk-based approach to integrity management. The rule has further fostered development of industry-wide technical standards, such as repair criteria to use following an internal inspection.

The Final Rule encourages a balanced program, addressing the range of prevention and mitigation needs and avoiding reliance on any single tool or overemphasis on any single cause of failure. A balanced program will lead to addressing the most significant risks in populated areas, unusually sensitive environmental areas, and commercially navigable waterways, thus improving industry performance in these areas.

The Final Rule requires a verification process that gives RSPA and state inspectors an opportunity to influence the methods of assessment and the interpretation of results. Government monitoring of the adequacy and implementation of this process should expedite the operators' rates of remedial action and reduce the public's exposure to risk.

A particularly significant benefit of this Final Rule involves the information that operators will gather to support decisions. Two essential elements of the integrity management program are the continual assessment and evaluation of pipeline integrity using inspection and testing technology, and the integration and analysis of all available information about the pipeline. The processes of planning, assessment, and evaluation will provide operators with better data to use in determining a pipeline's condition and the location of potential problems that must be addressed. Also, government inspectors will be able to focus on potential risks and consequences that require greater scrutiny and the need for more intensive preventive and mitigation measures.

The public has expressed concern about the danger pipelines may pose to their neighborhoods. The integrity management process leads to greater accountability to the public for both operators and DOT. This accountability is enhanced through our choice of a map-based approach to defining the areas most in need of additional protection—a visual depiction of pipelines in relation to populated areas, unusually sensitive environmental areas, and commercially navigable waterways. The system integrity requirements will assure the public that operators are continually inspecting and evaluating the threats to pipelines that pass through or close to populated areas.

We have not estimated quantitative benefits for the continual integrity management evaluation required by this Final Rule. We do not believe, however, that requiring this comprehensive process, including the reassessment of pipelines every 5 years, will be an undue burden on operators. We believe the added security this assessment will provide and the generally expedited rate of strengthening the pipeline system in high consequence areas are benefit enough to promulgate these requirements.

Laclede commented that we grossly underestimated implementation costs. Laclede notes that our estimate of the cost for all affected operators is $9.64 million, whereas Laclede expects itself to incur costs in excess of $1 million to modify its pipeline. Laclede's estimated costs are to replace piping that can not now be inspected with internal inspection devices. The rule does not require such pipe replacement, and costs for such replacement therefore were not included in the implementation cost estimate. The rule allows use of hydrostatic testing as an alternative to internal inspection. Laclede's replacement of piping to allow passage of internal inspection devices, if

undertaken, would be an operational choice based on the company's conclusion that internal inspection would be a better method of assessment than hydrostatic testing. Operators are free to make such operational choices, but they are not required by the rule, and costs associated with pipe replacement are not, therefore, a cost of implementing the rule. We fully considered the costs of hydrostatic testing in the Regulatory Evaluation.

DOE expressed concern that costs associated with shutdown time during assessment or with obtaining permits to conduct repair activities may not have been included in the Regulatory Evaluation. DOE also thought per-mile cost estimates may not be appropriate for operators with only a few miles of pipe. With respect to the impact on small entities, DOE thought the requirements could have an unreasonable impact in some cases.

The values we used to estimate costs for internal inspection and hydrostatic testing were based on detailed studies of both methods that considered all relevant costs. The outcome of those studies are per-mile estimates for conducting assessments. We recognize that costs may be higher for operators that have only a few miles of pipeline, and for whom ''fixed'' costs of assessment would be amortized over just a few miles. However, we are unable to estimate how many operators may be so affected. Many of the operators subject to this Final Rule are parts of larger companies, as described further in response to Small Business Administration comments, and should not be so affected. We will work with operators who may be unusually impacted, each of whom may request a waiver from particular requirements.

While costs for permitting associated with conducting assessments were included, permitting costs associated with repairs were not estimated. No repair costs were included in the Regulatory Evaluation. This rule does impose time limits on the repair of certain types of defects. Generally, however, repair of conditions that could adversely affect the safe operation of a pipeline is already required by 49 CFR 195.401 and so is not a new requirement in this rule.

Regulatory Flexibility Act

Under the Regulatory Flexibility Act (5 U.S.C. 601 *et seq.*), we must consider whether a rulemaking would have a significant impact on a substantial number of small entities. This Final Rule covers only those operators that own or operate less than 500 miles of regulated pipeline. Because of this limitation, only 132 hazardous liquid pipeline operators, covering 13.3 percent of regulated hazardous liquid pipelines, are covered by the Final Rule.

The risks of operating pipelines are similar regardless of the size of the operating company. Accordingly, the need to protect against those risks is also similar, regardless of operator size. We agree with WUTC's comment that ''[t]he integrity of the hazardous liquid infrastructure that runs beneath our nation's cities, and crosses our public and private lands, should not be treated differently depending on the amount of pipeline owned or operated by pipeline companies.''

We established an artificial cutoff criterion of 500 miles specifically so that we could review further the potential impact and safety needs of smaller operators to see if different treatment was needed. We completed our review and concluded that different treatment was not needed. By this Final Rule, we are establishing the same integrity management requirements for operators with less than 500 miles of pipelines as we established previously for operators with more pipeline mileage. Extending the existing requirements to the remaining operators of regulated pipelines is necessary to ensure the integrity of pipelines which could, if damaged or ruptured, cause significant injury to public safety and the environment.

We preliminarily concluded that there is no disproportionate impact on small businesses, principally because the risks are the same. We examined the companies that operate less than 500 miles of pipelines. A few of these operators are ''small businesses'' (less than 1500 employees, the Small Business Administration's criterion for defining a small business in the hazardous liquid pipeline industry.) The majority, however, is not. The majority includes larger companies or divisions or subsidiaries of very large national and multi-national companies.

We estimate that 132 operators are potentially subject to the requirements of this Final Rule, because that is the number of operators who paid user fees on less than 500 miles of pipeline in the last fiscal year. This number is a conservative upper bound. Some of these operators are not, in fact, affected by this rulemaking. As noted above, many are divisions or subsidiaries of larger companies. In many cases, the parent companies have other divisions or subsidiaries that operate pipelines and, when all are considered, own or operate more than 500 miles of such pipeline. Those companies, including all their divisions and subsidiaries which may, themselves, operate less than 500 miles of pipeline, are covered by existing § 195.452 and not by this Final Rule. In addition, this Final Rule only covers pipeline segments that could affect a high consequence area. It is possible that some operators, particularly those with only a few miles of pipe, may not operate any segments that could affect such areas. If so, those operators would not be covered by this Final Rule. Nevertheless, we continue to estimate costs on the basis of 132 covered companies, in order to provide a conservative estimate.

SBA thought the NPRM's discussion of the Regulatory Flexibility Act was inadequate. The discussion did not include background and basis information that was in the previous rulemaking applicable to operators with 500 or more miles of regulated pipeline. However, in the present document we have improved our discussion of Regulatory Flexibility Act issues to describe more clearly the basis for concluding that this Final Rule does not disproportionately affect small businesses. SBA's comments are also discussed in detail in the final Regulatory Evaluation, included in the docket.

Therefore, based on the facts available about the anticipated impacts of this rulemaking, I certify, pursuant to section 605 of the Regulatory Flexibility Act (5 U.S.C. 605), that this Final Rule will not have a significant impact on a substantial number of small entities.

Paperwork Reduction Act

This Final Rule contains information collection requirements. As required by the Paperwork Reduction Act of 1995 (44 U.S.C. 3507(d)), we have submitted a copy of the Paperwork Reduction Act Analysis to the OMB for review. The name of the information collection is ''Pipeline Integrity Management in High Consequence Areas for Operators with less than 500 miles of pipeline.'' The purpose of this information collection is designed to require operators of pipelines to develop a program to provide direct integrity testing and evaluation of pipelines in high consequence areas.

No comment submitted in response to the NPRM addressed the information collection requirements.

One hundred and thirty-two operators of hazardous liquid pipelines will be potentially subject to this Final Rule. We estimate that those operators will have to develop integrity management programs taking approximately 2,800 hours per program. Each of the operators will also have to devote 1,000 hours in the first year to integrate data

into current management information systems.

Additionally, under this Final Rule, operators will have to update their integrity management programs on a continual basis. We estimate updates will take approximately 330 hours per program, annually. An additional 500 hours per operator is estimated for the requirement to annually integrate data into the operator's current management information systems.

Under the Final Rule, operators may use either hydrostatic testing or an internal inspection tool as a method to assess their pipelines. However, operators may use another technology if they can demonstrate it provides an equivalent understanding of the condition of the line pipe as the other two assessment methods. Operators have to provide RSPA 90-days notice (by mail or facsimile) before using the other technology. We believe that few operators will choose this option. If they do choose an alternative technology, notice preparation should take approximately 1 hour. Because we believe few if any operators will elect to use other technologies, the burden was considered minimal and therefore not calculated.

Additionally, the Final Rule allows operators in particular situations to vary from the 5-year continual reassessment interval or repair schedule if they can provide the necessary justification and supporting documentation. Advance notice would have to be provided to RSPA if an operator does so. The advance notification can be in the form of letter or fax. We believe the burden of a letter or fax is minimal and therefore did not add it to the overall burden hours discussed above.

Organizations and individuals desiring to submit comments on the information collection should direct them to: The Office of Management and Budget, Office of Information and Regulatory Affairs, ATTN: RSPA Desk Officer, 727 Jackson Place, NW, Washington, DC 20503. Please provide the docket number of this action. Comments must be sent within 30 days of the publication of this Final Rule.

OMB is specifically interested in the following issues concerning the information collection:

1. Evaluating whether the collection is necessary for the proper performance of the functions of DOT, including whether the information would have a practical use;

2. Evaluating the accuracy of DOT's estimate of the burden of the collection of information, including the validity of assumptions used;

3. Enhancing the quality, usefulness and clarity of the information to be collected; and minimizing the burden of collection of information on those who are to respond, including through the use of appropriate automated electronic, mechanical, or other technological collection techniques or other forms of information technology; *e.g.,* permitting electronic submission of responses.

According to the Paperwork Reduction Act of 1995, no persons are required to respond to a collection of information unless a valid OMB control number is displayed. The OMB control number for this information collection is 2137–0605.

Executive Order 13084

This Final Rule has been analyzed in accordance with the principles and criteria contained in Executive Order 13084 (''Consultation and Coordination with Indian Tribal Governments''). Because this proposed rule does not significantly or uniquely affect the communities of the Indian tribal governments and does not impose substantial direct compliance costs, the funding and consultation requirements of Executive Order 13084 do not apply.

Executive Order 13132

This Final Rule has been analyzed in accordance with the principles and criteria contained in Executive Order 13132 (''Federalism''). This Final Rule does not adopt any regulation that: (1) Has substantial direct effects on the States, the relationship between the national government and the States, or the distribution of power and responsibilities among the various levels of government; (2) imposes substantial direct compliance costs on state and local governments; or (3) preempts state law. Therefore, the consultation and funding requirements of Executive Order 13132 (64 FR 43255, Aug. 10, 1999) do not apply. In a public meeting we held on November 18–19, 1999, we invited the National Association of Pipeline Safety Representatives (NAPSR), which includes State pipeline safety regulators, to participate in a general discussion on pipeline integrity. Again in January, and February 2000, we held conference calls with NAPSR, to receive its input before proposing an integrity management rule.

Impact on Business Processes and Computer Systems

We do not want to impose new requirements that would mandate business process changes when the resources necessary to implement those requirements would otherwise be applied to ''Y2K'' or related computer problems. This Final Rule does not mandate business process changes or require modifications to computer systems. Because the final rules will not affect the ability of organizations to respond to those problems, we are not delaying the effectiveness of the requirements.

Unfunded Mandates Reform Act of 1995

This Final Rule does not impose unfunded mandates under the Unfunded Mandates Reform Act of 1995. It does not result in costs of $100 million or more to either state, local, or tribal governments, in the aggregate, or to the private sector, and is the least burdensome alternative that achieves the objective of the NPRM.

National Environmental Policy Act

We have analyzed the Final Rule in accordance with section 102(2)(c) of the National Environmental Policy Act (42 U.S.C. 4332), the Council on Environmental Quality regulations (40 CFR parts 1500–1508), and DOT Order 5610.1D. We have determined that this action will not significantly affect the quality of the human environment.

The Environmental Assessment (available in the Docket) determined that the combined impacts of the initial baseline assessment (pressure testing or internal inspection), the subsequent periodic assessments, and additional preventive and mitigative measures that may be implemented to protect high consequence areas will result in positive environmental impacts. The number of incidents and the environmental damage from failures in and near high consequence areas are likely to be reduced. However, from a national perspective, the impact is not expected to be significant for the pipeline operators covered by the Final Rule. The following discussion summarizes the analysis provided in the Environmental Assessment.

Many operators covered by the Final Rule (those operating less than 500 miles of regulated pipeline) already have internal inspection and pressure testing programs that cover most, if not all, of their pipeline systems. These operators typically place a high priority on the pipeline's proximity to populated areas, commercially navigable waterways, and environmental resources when making decisions about where and when to inspect and test pipelines. As a result, some high consequence areas have already been recently assessed, and a large fraction of remaining locations would probably have been assessed in the next several years without the Final Rule. The most tangible impact will be to ensure

assessments are performed for those line segments that could affect a high consequence area that are not currently being internally inspected or pressure tested, and ensuring that integrity is maintained through an integrity management program that requires periodic assessments in these locations. Because hazardous liquid pipeline failure rates are low, and because the total pipeline mileage operated by operators with less than 500 miles of pipeline that could affect high consequence areas is small, the Final Rule has only a small effect on the likelihood of pipeline failure in these locations.

The Final Rule will result in more frequent integrity assessments of line segments that could affect high consequence areas than most operators are currently conducting (due to the 5-year interval required for periodic assessment). However, if the operator identifies and repairs significant problems discovered during the baseline inspection, and has in place solid risk controls to prevent corrosion and other threats, as they must, the benefits of assessing every 5 years versus the longer intervals operators more typically employ are not expected to be significant.

The Final Rule requires operators to conduct an integrated evaluation of all potential threats to pipeline integrity, and to consider and take preventive or mitigative risk control measures to provide enhanced protection. If there is a vulnerability to a particular failure cause, like third-party damage, these evaluations should identify additional risk controls to address these threats. Some operators covered by the Final Rule already perform integrity evaluations or formal risk assessments that consider the environmental sensitivity and impacts on population. These evaluations have already led to additional risk controls beyond existing requirements to improve protection for these locations. For these operators, it is expected that additional risk controls will be limited and customized to site-specific conditions that the operator may not have previously recognized.

Finally, an important, although less tangible, benefit of the Final Rule will be to establish requirements for operator integrity management programs that assure a more comprehensive and integrated evaluation of pipeline system integrity in high consequence areas. In effect, this will codify and bring an appropriate level of uniformity to the integrity management programs some operators are currently implementing. It will also require operators who have limited, or no, integrity management programs to raise their level of performance.

We expect this Final Rule to provide a more consistent, and overall, a higher level of protection for high consequence areas across the nation. Even though there is a benefit, we have concluded that it is not significant, and, therefore, have issued a finding of no significant impact.

Executive Order 13211

This rulemaking is not a ''Significant energy action'' under Executive Order 13211. It is not a significant regulatory action under Executive Order 12866 and is not likely to have a significant adverse effect on the supply, distribution, or use of energy. Further, this rulemaking has not been designated by the Administrator of the Office of Information and Regulatory Affairs as a significant energy action.

List of Subjects in 49 CFR Part 195

Carbon dioxide, Petroleum, Pipeline safety, Reporting and recordkeeping requirements.

In consideration of the foregoing, we are amending 49 CFR part 195 as follows:

PART 195—TRANSPORTATION OF HAZARDOUS LIQUIDS BY PIPELINE

1. The authority citation for part 195 continues to read as follows:

Authority: 49 U.S.C. 5103, 60102, 60104, 60108, 60109, 60118; and 49 CFR 1.53.

Subpart F—Operation and Maintenance

2. In § 195.452, paragraphs (a), (b), (d) heading, (d)(1), and (d)(2) are revised and paragraph (d) introductory text is added to read as follows:

§ 195.452 Pipeline integrity management in high consequence areas.

(a) *Which pipelines are covered by this section?* This section applies to each hazardous liquid pipeline and carbon dioxide pipeline that could affect a high consequence area, including any pipeline located in a high consequence area unless the operator effectively demonstrates by risk assessment that the pipeline could not affect the area. (Appendix C of this part provides guidance on determining if a pipeline could affect a high consequence area.) Covered pipelines are categorized as follows:

(1) Category 1 includes pipelines existing on May 29, 2001, that were owned or operated by an operator who owned or operated a total of 500 or more miles of pipeline subject to this part.

(2) Category 2 includes pipelines existing on May 29, 2001, that were owned or operated by an operator who owned or operated less than 500 miles of pipeline subject to this part.

(3) Category 3 includes pipelines constructed or converted after May 29, 2001.

(b) *What program and practices must operators use to manage pipeline integrity?* Each operator of a pipeline covered by this section must:

(1) Develop a written integrity management program that addresses the risks on each segment of pipeline in the first column of the following table not later than the date in the second column:

Pipeline	Date
Category 1	March 31, 2002.
Category 2	February 18, 2003.
Category 3	1 year after the date the pipeline begins operation.

(2) Include in the program an identification of each pipeline or pipeline segment in the first column of the following table not later than the date in the second column:

Pipeline	Date
Category 1	December 31, 2001.
Category 2	November 18, 2002.
Category 3	Date the pipeline begins operation.

(3) Include in the program a plan to carry out baseline assessments of line pipe as required by paragraph (c) of this section.

(4) Include in the program a framework that—

(i) Addresses each element of the integrity management program under paragraph (f) of this section, including continual integrity assessment and evaluation under paragraph (j) of this section; and

(ii) Initially indicates how decisions will be made to implement each element.

(5) Implement and follow the program.

(6) Follow recognized industry practices in carrying out this section, unless—

(i) This section specifies otherwise; or

(ii) The operator demonstrates that an alternative practice is supported by a reliable engineering evaluation and provides an equivalent level of public safety and environmental protection.

* * * * *

(d) *When must operators complete baseline assessments?* Operators must complete baseline assessments as follows:

(1) *Time periods.* Complete assessments before the following deadlines:

If the pipeline is:	Then complete baseline assessments not later than the following date according to a schedule that prioritizes assessments:	And assess at least 50 percent of the line pipe on an expedited basis, beginning with the highest risk pipe, not later than:
Category 1	March 31, 2008	September 30, 2004.
Category 2	February 17, 2009	August 16, 2005.
Category 3	Date the pipeline begins operation	Not applicable.

(2) *Prior assessment.* To satisfy the requirements of paragraph (c)(1)(i) of this section for pipelines in the first column of the following table, operators may use integrity assessments conducted after the date in the second column, if the integrity assessment method complies with this section. However, if an operator uses this prior assessment as its baseline assessment, the operator must reassess the line pipe according to paragraph (j)(3) of this section. The table follows:

Pipeline	Date
Category 1	January 1, 1996.
Category 2	December 18, 2006.

* * * * *

Issued in Washington, DC, on January 8, 2002.

Ellen G. Engleman,

Administrator.

[FR Doc. 02–858 Filed 1–15–02; 8:45 am]

BILLING CODE 4910–60–P

Proposed Rules

Federal Register
Vol. 67, No. 11
Wednesday, January 16, 2002

This section of the FEDERAL REGISTER contains notices to the public of the proposed issuance of rules and regulations. The purpose of these notices is to give interested persons an opportunity to participate in the rule making prior to the adoption of the final rules.

DEPARTMENT OF TRANSPORTATION

Federal Aviation Administration

14 CFR Part 39

[Docket No. 2001–SW–25–AD]

RIN 2120–AA64

Airworthiness Directives; MD Helicopters, Inc., Model MD900 Helicopters

AGENCY: Federal Aviation Administration, DOT.

ACTION: Notice of proposed rulemaking (NPRM).

SUMMARY: This document proposes adopting a new airworthiness directive (AD) for certain serial numbered MD Helicopters, Inc. (MDHI) Model MD900 helicopters. The AD would require, for the lateral-mixer bellcrank assembly (bellcrank), establishing a life limit, creating a component history card or equivalent record, determining the hours time-in-service (TIS), and applying a serial number (S/N). This proposal is prompted by additional testing, which revealed that the original load test to establish the life limits of the bellcrank did not accurately represent the actual loading. The actions specified by the proposed AD are intended to prevent fatigue failure of the bellcrank and subsequent loss of lateral control of the helicopter.

DATES: Comments must be received on or before March 18, 2002.

ADDRESSES: Submit comments in triplicate to the Federal Aviation Administration (FAA), Office of the Regional Counsel, Southwest Region, Attention: Rules Docket No. 2001–SW–25–AD, 2601 Meacham Blvd., Room 663, Fort Worth, Texas 76137. You may also send comments electronically to the Rules Docket at the following address: *9-asw-adcomments@faa.gov.* Comments may be inspected at the Office of the Regional Counsel between 9 a.m. and 3 p.m., Monday through Friday, except Federal holidays.

FOR FURTHER INFORMATION CONTACT: Jon Mowery, Aviation Safety Engineer, FAA, Los Angeles Aircraft Certification Office, Airframe Branch, 3960 Paramount Blvd., Lakewood, California 90712, telephone (562) 627–5322, fax (562) 627–5210.

SUPPLEMENTARY INFORMATION:

Comments Invited

Interested persons are invited to participate in the making of the proposed rule by submitting such written data, views, or arguments as they may desire. Communications should identify the Rules Docket number and be submitted in triplicate to the address specified above. All communications received on or before the closing date for comments will be considered before taking action on the proposed rule. The proposals contained in this document may be changed in light of the comments received.

Comments are specifically invited on the overall regulatory, economic, environmental, and energy aspects of the proposed rule. All comments submitted will be available, both before and after the closing date for comments, in the Rules Docket for examination by interested persons. A report summarizing each FAA-public contact concerned with the substance of this proposal will be filed in the Rules Docket.

Commenters wishing the FAA to acknowledge receipt of their mailed comments submitted in response to this proposal must submit a self-addressed, stamped postcard on which the following statement is made: ''Comments to Docket No. 2001–SW–25–AD.'' The postcard will be date stamped and returned to the commenter.

Availability of NPRMs

Any person may obtain a copy of this NPRM by submitting a request to the FAA, Office of the Regional Counsel, Southwest Region, Attention: Rules Docket No. 2001–SW–25–AD, 2601 Meacham Blvd., Room 663, Fort Worth, Texas 76137.

Discussion

This amendment proposes adopting a new AD for certain serial numbered MDHI Model MD900 helicopters with a bellcrank, P/N 900C2010203–105, installed that currently has an unlimited life. Additional testing has revealed that the original load test to establish the life limits of the part did not accurately represent the actual loading. Thus, we have determined that the bellcrank should have a serviceable life of 13,300 hours TIS. This creates an unsafe condition. This condition, if not corrected, could result in fatigue failure of the bellcrank and subsequent loss of lateral control of the helicopter.

This unsafe condition is likely to exist or develop on certain other helicopters of the same type design. Therefore, the proposed AD would require, before further flight, the following for the bellcrank on an affected helicopter:

- Create a component history card or equivalent record.
- Determine the hours TIS of the bellcrank.
- Apply a S/N.
- Remove any affected bellcrank that exceeds the life limit.

This AD would revise the Limitations section of the maintenance manual by establishing a life limit of 13,300 hours TIS for the bellcrank, P/N 900C2010203–105.

The FAA estimates that 30 helicopters of U.S. registry would be affected by this proposed AD, that it would take approximately ½ work hour per helicopter to accomplish the required actions for the bellcrank, and that the average labor rate is $60 per work hour. Required parts would cost approximately $10,120 per helicopter. Based on these figures, the total cost impact of the proposed AD on U.S. operators is estimated to be $304,500 assuming replacement of the bellcranks in all 30 helicopters.

The regulations proposed herein would not have a substantial direct effect on the States, on the relationship between the national Government and the States, or on the distribution of power and responsibilities among the various levels of government. Therefore, it is determined that this proposal would not have federalism implications under Executive Order 13132.

For the reasons discussed above, I certify that this proposed regulation (1) is not a ''significant regulatory action'' under Executive Order 12866; (2) is not a ''significant rule'' under the DOT Regulatory Policies and Procedures (44 FR 11034, February 26, 1979); and (3) if promulgated, will not have a significant economic impact, positive or negative, on a substantial number of small entities

under the criteria of the Regulatory Flexibility Act. A copy of the draft regulatory evaluation prepared for this action is contained in the Rules Docket. A copy of it may be obtained by contacting the Rules Docket at the location provided under the caption **ADDRESSES**.

List of Subjects in 14 CFR Part 39

Air transportation, Aircraft, Aviation safety, Safety.

The Proposed Amendment

Accordingly, pursuant to the authority delegated to me by the Administrator, the Federal Aviation Administration proposes to amend part 39 of the Federal Aviation Regulations (14 CFR part 39) as follows:

PART 39—AIRWORTHINESS DIRECTIVES

1. The authority citation for part 39 continues to read as follows:

Authority: 49 U.S.C. 106(g), 40113, 44701.

§ 39.13 [Amended]

2. Section 39.13 is amended by adding a new airworthiness directive to read as follows:

MD Helicopters, Inc.: Docket No. 2001–SW–25–AD.

Applicability: Model MD900 helicopters, Serial Number (S/N) 900–00008, 900–00010 through 900–00098, and 900–00100, with a lateral-mixer bellcrank assembly (bellcrank), part number (P/N) 900C2010203–105, installed, certificated in any category.

Note 1: This AD applies to each helicopter identified in the preceding applicability provision, regardless of whether it has been otherwise modified, altered, or repaired in the area subject to the requirements of this AD. For helicopters that have been modified, altered, or repaired so that the performance of the requirements of this AD is affected, the owner/operator must request approval for an alternative method of compliance in accordance with paragraph (e) of this AD. The request should include an assessment of the effect of the modification, alteration, or repair on the unsafe condition addressed by this AD; and if the unsafe condition has not been eliminated, the request should include specific proposed actions to address it.

Compliance: Before further flight, unless accomplished previously.

To prevent fatigue failure of the bellcrank and subsequent loss of lateral control of the helicopter, accomplish the following:

(a) Create a component history card or equivalent record for each bellcrank and record the hours time-in-service (TIS) of the bellcrank. If the hours TIS of the bellcrank cannot be determined, use the helicopter's total hours TIS as the hours TIS for the bellcrank.

(b) Apply a S/N to the bellcrank in accordance with the Accomplishment Instructions, paragraph (1)(a) and (1)(b), of MD Helicopters, Inc. Service Bulletin SB 900–084, dated December 3, 2001.

(c) Remove any bellcrank that has exceeded 13,300 hours TIS.

(d) This AD revises the Limitations section of the maintenance manual by establishing a life limit of 13,300 hours TIS for bellcrank, P/N 900C2010203–105.

(e) An alternative method of compliance or adjustment of the compliance time that provides an acceptable level of safety may be used if approved by the Manager, Los Angeles Aircraft Certification Office (LAACO), FAA. Operators shall submit their requests through an FAA Principal Maintenance Inspector, who may concur or comment and then send it to the Manager, LAACO.

Note 2: Information concerning the existence of approved alternative methods of compliance with this AD, if any, may be obtained from the LAACO.

(f) Special flight permits may be issued in accordance with 14 CFR 21.197 and 21.199 to operate the helicopter to a location where the requirements of this AD can be accomplished.

Issued in Fort Worth, Texas, on January 4, 2002.

David A. Downey,

Manager, Rotorcraft Directorate, Aircraft Certification Service.

[FR Doc. 02–1058 Filed 1–15–02; 8:45 am]

BILLING CODE 4910–13–P

DEPARTMENT OF TRANSPORTATION

Federal Aviation Administration

14 CFR Part 39

[Docket No. 2001–SW–54–AD]

RIN 2120–AA64

Airworthiness Directives; Bell Helicopter Textron Canada Model 407 Helicopters

AGENCY: Federal Aviation Administration, DOT.

ACTION: Notice of proposed rulemaking (NPRM).

SUMMARY: This document proposes adopting a new airworthiness directive (AD) for Bell Helicopter Textron Canada (BHTC) Model 407 helicopters. This proposal would require visually inspecting the forward hanger bearing bracket (bracket). This proposal is prompted by reports of cracks in the bracket. The actions specified by this proposed AD are intended to detect a crack in the bracket, to prevent loss of tail rotor drive or tail rotor control and subsequent loss of control of the helicopter.

DATES: Comments must be received on or before March 18, 2002.

ADDRESSES: Submit comments in triplicate to the Federal Aviation Administration (FAA), Office of the Regional Counsel, Southwest Region, Attention: Rules Docket No. 2001–SW–54–AD, 2601 Meacham Blvd., Room 663, Fort Worth, Texas 76137. You may also send comments electronically to the Rules Docket at the following address: *9-asw-adcomments@faa.gov.* Comments may be inspected at the Office of the Regional Counsel between 9 a.m. and 3 p.m., Monday through Friday, except Federal holidays.

FOR FURTHER INFORMATION CONTACT: Sharon Miles, Aviation Safety Engineer, FAA, Rotorcraft Directorate, Regulations Group, Fort Worth, Texas 76193–0111, telephone (817) 222–5122, fax (817) 222–5961.

SUPPLEMENTARY INFORMATION:

Comments Invited

Interested persons are invited to participate in the making of the proposed rule by submitting such written data, views, or arguments as they may desire. Communications should identify the Rules Docket number and be submitted in triplicate to the address specified under the caption **ADDRESSES**. All communications received on or before the closing date for comments will be considered before taking action on the proposed rule. The proposals contained in this document may be changed in light of the comments received.

Comments are specifically invited on the overall regulatory, economic, environmental, and energy aspects of the proposed rule. All comments submitted will be available, both before and after the closing date for comments, in the Rules Docket for examination by interested persons. A report summarizing each FAA-public contact concerned with the substance of this proposal will be filed in the Rules Docket.

Commenters wishing the FAA to acknowledge receipt of their mailed comments submitted in response to this proposal must submit a self-addressed, stamped postcard on which the following statement is made: ''Comments to Docket No. 2001–SW–54–AD.'' The postcard will be date stamped and returned to the commenter.

Availability of NPRMs

Any person may obtain a copy of this NPRM by submitting a request to the FAA, Office of the Regional Counsel, Southwest Region, Attention: Rules Docket No. 2001–SW–54–AD, 2601 Meacham Blvd., Room 663, Fort Worth, Texas 76137.

Discussion

Transport Canada, the airworthiness authority for Canada, notified the FAA that an unsafe condition may exist on BHTC Model 407 helicopters. Transport Canada advises of reports of cracks in certain brackets.

BHTC has issued Alert Service Bulletin No. 407–01–39, Revision A, dated May 30, 2001 (ASB). That ASB specifies initial and repetitive inspections for a crack in bracket, part number (P/N) 407–040–321–101 and –103, for helicopters, serial number 53000 through 53442 with flywheel, P/N 407–040–316–101, installed. Transport Canada classified this ASB as mandatory and issued AD No. CF–2001–32, dated August 13, 2001, to ensure the continued airworthiness of these helicopters in Canada.

This helicopter model is manufactured in Canada and is type certificated for operation in the United States under the provisions of 14 CFR 21.29 and the applicable bilateral agreement. Pursuant to the applicable bilateral agreement, Transport Canada has kept the FAA informed of the situation described above. The FAA has examined the findings of Transport Canada, reviewed all available information, and determined that AD action is necessary for products of this type design that are certificated for operation in the United States.

This unsafe condition is likely to exist or develop on other helicopter models of the same type design registered in the United States. Therefore, the proposed AD would require initial and repetitive visual inspections for a crack in certain brackets and if a crack is found, removing the bracket before further flight.

The FAA estimates that 442 helicopters of U.S. registry would be affected by this proposed AD, that it would take approximately 1/4 work hour per helicopter to accomplish the proposed actions, and that the average labor rate is $60 per work hour. Based on these figures, the total cost impact of the proposed AD on U.S. operators is estimated to be $6630 assuming no crack is detected in a bracket.

The regulations proposed herein would not have a substantial direct effect on the States, on the relationship between the national Government and the States, or on the distribution of power and responsibilities among the various levels of government. Therefore, it is determined that this proposal would not have federalism implications under Executive Order 13132.

For the reasons discussed above, I certify that this proposed regulation (1) is not a ''significant regulatory action'' under Executive Order 12866; (2) is not a ''significant rule'' under the DOT Regulatory Policies and Procedures (44 FR 11034, February 26, 1979); and (3) if promulgated, will not have a significant economic impact, positive or negative, on a substantial number of small entities under the criteria of the Regulatory Flexibility Act. A copy of the draft regulatory evaluation prepared for this action is contained in the Rules Docket. A copy of it may be obtained by contacting the Rules Docket at the location provided under the caption **ADDRESSES.**

List of Subjects in 14 CFR Part 39

Air transportation, Aircraft, Aviation safety, Safety.

The Proposed Amendment

Accordingly, pursuant to the authority delegated to me by the Administrator, the Federal Aviation Administration proposes to amend part 39 of the Federal Aviation Regulations (14 CFR part 39) as follows:

PART 39—AIRWORTHINESS DIRECTIVES

1. The authority citation for part 39 continues to read as follows:

Authority: 49 U.S.C. 106(g), 40113, 44701.

§ 39.13 [Amended]

2. Section 39.13 is amended by adding a new airworthiness directive to read as follows:

Bell Helicopter Textron Canada: Docket No. 2001–SW–54–AD.

Applicability: Model 407 helicopters, serial number 53000 through 53442, with flywheel, part number (P/N) 407–040–316–101, installed, certificated in any category.

Note 1: This AD applies to each helicopter identified in the preceding applicability provision, regardless of whether it has been otherwise modified, altered, or repaired in the area subject to the requirements of this AD. For helicopters that have been modified, altered, or repaired so that the performance of the requirements of this AD is affected, the owner/operator must request approval for an alternative method of compliance in accordance with paragraph (b) of this AD. The request should include an assessment of the effect of the modification, alteration, or repair on the unsafe condition addressed by this AD; and if the unsafe condition has not been eliminated, the request should include specific proposed actions to address it.

Compliance: Required as indicated, unless accomplished previously.

To detect a crack in the forward bearing hanger bracket (bracket) and to prevent loss of tail rotor drive or tail rotor control and subsequent loss of control of the helicopter, accomplish the following:

(a) Within 25 hours time-in-service (TIS) and thereafter at intervals not to exceed 25 hours TIS, visually inspect each bracket, P/N 407–040–321–101 or –103, for a crack in the shaded area shown in Figure 1 of this AD. Remove any cracked bracket from service.

Note 2: Dismantling of the bearing hanger and the support is not required to accomplish the requirements of this AD.

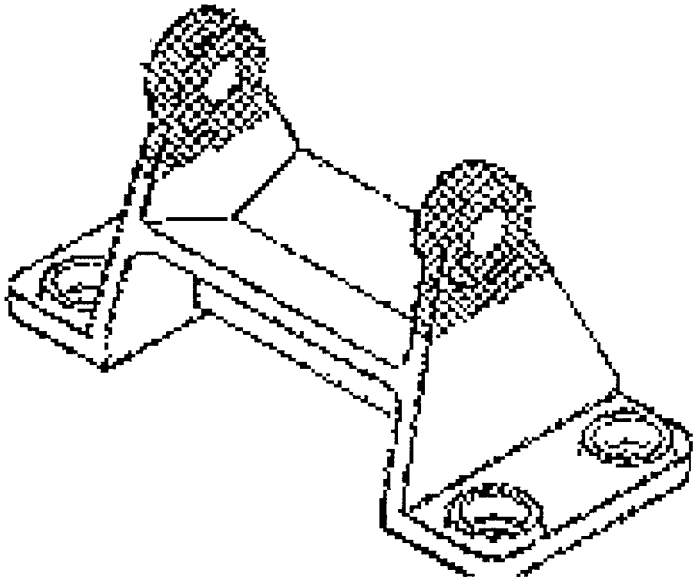

Bracket P/N 407-040-321-101/-103

Figure 1

Note 3: Bell Helicopter Textron Canada Alert Service Bulletin No. 407–01–39, Revision A, dated May 30, 2001, pertains to the subject of this AD.

(b) An alternative method of compliance or adjustment of the compliance time that provides an acceptable level of safety may be used if approved by the Manager, Regulations Group, Rotorcraft Directorate, FAA. Operators shall submit their requests through an FAA Principal Maintenance Inspector, who may concur or comment and then send it to the Manager, Regulations Group.

Note 4: Information concerning the existence of approved alternative methods of compliance with this AD, if any, may be obtained from the Regulations Group.

(c) Special flight permits may be issued in accordance with 14 CFR 21.197 and 21.199 to operate the helicopter to a location where the requirements of this AD can be accomplished.

Note 5: The subject of this AD is addressed in Transport Canada (Canada) AD No. CF–2001–32, dated August 13, 2001.

Issued in Fort Worth, Texas, on January 4, 2002.

David A. Downey,

Manager, Rotorcraft Directorate, Aircraft Certification Service.

[FR Doc. 02–1057 Filed 1–15–02; 8:45 am]

BILLING CODE 4910–13–P

DEPARTMENT OF TRANSPORTATION

Federal Aviation Administration

14 CFR Part 71

[Airspace Docket No. 01–AGL–03]

Proposed Modification of Class E Airspace; Lake Geneva, WI

AGENCY: Federal Aviation Administration (FAA), DOT.

ACTION: Notice of proposed rulemaking.

SUMMARY: This action proposes to modify Class E airspace at Lake Geneva, WI. An Area Navigation (RNAV) Standard Instrument Approach Procedure (SIAP) to Runway 23 has been developed for Grand Geneva Resort Airport. Controlled airspace extending upward from 700 feet or more above the surface of the earth is needed to contain aircraft executing these approaches. This action would increase the radius of the existing controlled airspace for Grand Geneva Resort Airport.

DATES: Comments must be received on or before February 17, 2002.

ADDRESSES: Send comments on the proposal in triplicate to: Federal Aviation Administration, Office of the Regional Counsel, AGL–7, Rules Docket No. 01–AGL–03, 2300 East Devon Avenue, Des Plaines, Illinois 60018.

The official docket may be examined in the Office of the Regional Counsel, Federal Aviation Administration, 2300 East Devon Avenue, Des Plaines, Illinois. An informal docket may also be examined during normal business hours at the Air Traffic Division, Airspace Branch, Federal Aviation Administration, 2300 East Devon Avenue, Des Plaines, Illinois.

FOR FURTHER INFORMATION CONTACT: Denis C. Burke, Air Traffic Division, Airspace Branch, AGL–520, Federal Aviation Administration, 2300 East Devon Avenue, Des Plaines, Illinois 60018, telephone (847) 294–7568.

SUPPLEMENTARY INFORMATION:

Comment Invited

Interested parties are invited to participate in this proposed rulemaking by submitting such written data, views, or agruments as they may desire. Comments that provide the factual basis supporting the views and suggestions presented are particularly helpful in developing reasoned regulatory decisions on the proposal. Comments are specifically invited on the overall regulatory, aeronautical, economic, environmental, and energy-related aspects of the proposal. Communications should identify the airspace docket number and be submitted in triplicate to the address listed above. Commenters wishing the FAA to acknowledge receipt of their comments on this action must submit with those comments a self-addressed, stamped postcard on which the following statement is made:

''Comments to Airspace Docket No. 01–AGL–03.'' The postcard will be date/time stamped and returned to the commenter. All communications received on or before the specified closing date for comments will be considered before taking action on the proposed rule. The proposal contained in this action may be changed in light of comments received. All comments submitted will be available for examination in the Rules Docket, FAA, Great Lakes Region, Office of the Regional Counsel, 2300 East Devon Avenue, Des Plaines, Illinois, both before and after the closing date for comments. A report summarizing each substantive public contact with FAA personnel concerned with this rulemaking will be filed in the docket.

Availability of NPRM's

Any person may obtain a copy of this Notice of Proposed Rulemaking (NPRM) by submitting a request to the Federal Aviation Administration, Office of Public Affairs, Attention: Public Inquiry Center, APA–230, 800 Independence Avenue, SW, Washington, DC 20591, or by calling (202) 267–3484. Communications must identify the docket number of this NPRM. Persons interested in being placed on a mailing list for future NPRM's should also request a copy of Advisory Circular No. 11–2A, which describes the application procedure.

The Proposal

The FAA is considering an amendment to 14 CFR part 71 to modify Class E airspace at Lake Geneva, WI, by increasing the radius of the controlled airspace for Grand Geneva Resort Airport. Controlled airspace extending upward from 700 feet or more above the surface of the earth is needed to contain aircraft executing instrument approach procedures. The area would be depicted on appropriate aeronautical charts. Class E airspace areas extending upward from 700 feet or more above the surface of the earth are published in paragraph 6005 of FAA Order 7400.9J dated August 31, 2001, and effective September 16, 2001, which is incorporated by reference in 14 CFR 71.1. The Class E designations listed in this document would be published subsequently in the Order.

The FAA has determined that this proposed regulation only involves an establishment body of technical regulations for which frequent and routine amendments are necessary to keep them operationally current. Therefore this, proposed regulation—(1) is not a ''significant regulatory action'' under Executive Order 12866; (2) is not a ''signficant rule'' under DOT Regulatory Policies and Procedures (44 FR 11034; February 26, 1979); and (3) does not warrant preparation of a Regulatory Evaluation as the anticipated impact is so minimal. Since this is a routine matter that will only affect air traffic procedures and air navigation, it is certified that this proposed rule will not have a significant economic impact on a substantial number of small entities under the criteria of the Regulatory Flexibility Act.

List of Subjects in 14 CFR Part 71

Airspace, Incorporation by reference, Navigation (air).

The Proposed Amendment

Accordingly, pursuant to the authority delegated to me, the Federal Aviation Administration proposes to amend 14 CFR part 71 as follows:

PART 71—DESIGNATION OF CLASS A, CLASS B, CLASS C, CLASS D, AND CLASS E AIRSPACE AREAS, AIRWAYS; ROUTES; AND REPORTING POINTS

1. The authority citation for part 71 continues to read as follows:

Authority: 49 U.S.C. 106(g), 40103, 40113, 40120; E.O. 10854, 24 FR 9565, 3 CFR, 1959–1963 Comp., p. 389.

§ 71.1 [Amended]

2. The incorporation by reference in 14 CFR 71.1 of the Federal Aviation Administratiaon Order 7400.9J, Airspace Designations and Reporting Points, dated August 31, 2001, and effective September 16, 2001, is amended as follows:

* * * * *

Paragraph 6005 Class E airspace areas extending upward from 700 feet or more above the surface of the earth.

* * * * *

AGL WI ES Lake Geneva, WI [REVISED]

Grand Geneva Resort Airport, WI
(Lat. 42°36′53″ N., long, 88°23′22″ W.)

That airspace extending upward from 700 feet above the surface within a 8.4-mile radius of the Grand Geneva Resort Airport, excluding that airspace within the Chicago, IL, Burlington, WI, Delevan, WI, and East Troy, WI, Class E airspace area.

* * * * *

Issued in Des Plaines, Illinois, on December 5, 2001.

Nancy B. Shelton,

Manager, Air Traffic Division, Great Lakes Region.

[FR Doc. 02–1014 Filed 1–15–02; 8:45 am]

BILLING CODE 4910–13–M

DEPARTMENT OF TRANSPORTATION

Federal Aviation Administration

14 CFR Part 71

[Airspace Docket No. 01–AGL–04]

Proposed Modification of Class E Airspace; Winona, MN

AGENCY: Federal Aviation Administration (FAA), DOT.

ACTION: Notice of proposed rulemaking.

SUMMARY: This action proposes to modify Class E airspace at Winona, MN. An Area Navigation (RNAV) Standard Instrument Approach Procedure (SIAP) to Runway 29 has been developed for Winona Municipal-Max Conrad Airport. Controlled airspace extending upward from 700 feet or more above the surface of the earth is needed to contain aircraft executing these approaches. This action would increase the radius of the existing controlled airspace for Winona Municipal-Max Airport.

DATES: Comments must be received on or before February 17, 2002.

ADDRESSES: Send comments on the proposal in triplicate to: Federal Aviation Administration, Office of the Regional Counsel, AGL–7, Rules Docket No. 01–AGL–04, 2300 East Devon Avenue, Des Plaines, Illinois 60018.

The official docket may be examined in the Office of the Regional Counsel, Federal Aviation Administration, 2300 East Devon Avenue, Des Plaines, Illinois. An informal docket may also be examined during normal business hours at the Air Traffic Division, Airspace Branch, Federal Aviation Administration, 2300 East Devon Avenue, Des Plaines, Illinois.

FOR FURTHER INFORMATION CONTACT: Denis C. Burke, Air Traffic Division, Airspace Branch, AGL–520, Federal Aviation Administration, 2300 East Devon Avenue, Des Plaines, Illinois 60018, telephone (847) 294–7568.

SUPPLEMENTARY INFORMATION:

Comments Invited

Interested parties are invited to participate in this proposed rulemaking by submitting such written data, views, or arguments as they may desire. Comments that provide the factual basis supporting the views and suggestions presented are particularly helpful in developing reasoned regulatory decisions on the proposal. Comments are specifically invited on the overall regulatory, aeronautical, economic, environmental, and energy-related aspects of the proposal. Communications should identify the

airspace docket number and be submitted in triplicate to the address listed above. Commenters wishing the FAA to acknowledge receipt of their comments on this action must submit with those comments a self-addressed, stamped postcard on which the following statement is made: ''Comments to Airspace Docket No. 01–AGL–04.'' The postcard will be date/time stamped and returned to the commenter. All communications received on or before the specified closing date for comments will be considered before taking action on the proposed rule. The proposal contained in this action may be changed in light of comments received. All comments submitted will be available for examination in the Rules Docket, FAA, Great Lakes Region, Office of the Regional Counsel, 2300 East Devon Avenue, Des Plaines, Illinois, both before and after the closing date for comments. A report summarizing each substantive public contact with FAA personnel concerned with this rulemaking will be filed in the docket.

Availability of NPRM's

Any person may obtain a copy of this Notice of Proposed Rulemaking (NPRM) by submitting a request to the Federal Aviation Administration, Office of Public Affairs, Attention: Public Inquiry Center, APA–230, 800 Independence Avenue, S.W., Washington, DC 20591, or by calling (202) 267–3484. Communications must identify the docket number of this NPRM. Persons interested in being placed on a mailing list for future NPRM's should also request a copy of Advisory Circular No. 11–2A, which describes the application procedure.

The Proposal

The FAA is considering an amendment to 14 CFR part 71 to modify Class E airspace at Winona, MN, for Winona Municipal-Max Conrad Airport. Controlled airspace extending upward from 700 feet or more above the surface of the earth is needed to contain aircraft executing instrument approach procedures. The area would be depicted on appropriate aeronautical charts. Class E airspace areas extending upward from 700 feet or more above the surface of the earth are published in paragraph 6005 of FAA Order 7400.9J dated August 31, 2001, and effective September 16, 2001, which is incorporated by reference in 14 CFR 71.1. The Class E designations listed in this document would be published subsequently in the Order.

The FAA has determined that this proposed regulation only involves an establishment body of technical regulations for which frequent and route amendments are necessary to keep them operationally current. Therefore this proposed regulation—(1) is not a ''significant regulatory action'' under Executive Order 12866; (2) is not a ''significant rule'' under DOT Regulatory Policies and Procedures (44 FR 11034; February 26, 1979); and (3) does not warrant preparation of a Regulatory Evaluation as the anticipated impact is so minimal. since this is a routing matter that will only affect air traffic procedures and air navigation, it is certified that this proposed rule will not have a significant economic impact on a substantial number of small entities under the criteria of the Regulatory Flexibility Act.

List of Subjects in 14 CFR Part 71

Airspace, Incorporation by reference, Navigation (air).

The Proposed Amendment

Accordingly, pursuant to the authority delegated to me, the Federal Aviation Administration proposes to amend 14 CFR part 71 as follows:

PART 71—DESIGNATION OF CLASS A, CLASS B, CLASS C, CLASS D, AND CLASS E AIRSPACE AREAS; AIRWAYS; ROUTES; AND REPORTING POINTS

1. The authority citation for part 71 continues to read as follows:

Authority: 49 U.S.C. 106(g), 40103, 40113, 40120; E.O. 10854, 24 FR 9565, 3 CFR, 1959–1963 Comp., p. 389.

§ 71.1 [Amended]

2. The incorporation by reference in 14 CFR 71.1 of the Federal Aviation Administration Order 7400.9J, Airspace Designations and Reporting Points, dated August 31, 2001, and effective September 16, 2001, is amended as follows:

* * * * *

Paragraph 6005 Class E airspace areas extending upward from 700 feet or more above the surface of the earth.

* * * * *

AGL MN E5 Winona, MN [REVISED]

Winona Municipal-Max Conrad Field, MN
(Lat. 44°04′38″ N., long. 91°42′30″ W.)

That airspace extending upward from 700 feet above the surface within a 7-mile radius of the Winona Municipal-Max Conrad Field, and within 2 miles each side of the 108° bearing extending from the 7 mile radius to 9.5 miles southeast of the airport excluding that airspace within the LaCrosse WI, class E airspace area.

* * * * *

Issued in Des Plaines, Illinois, on December 5, 2001.

Nancy B. Shelton,

Manager, Air Traffic Division, Great Lakes Region.

[FR Doc. 02–1013 Filed 1–15–02; 8:45 am]

BILLING CODE 4910–13–M

DEPARTMENT OF TRANSPORTATION

Federal Aviation Administration

14 CFR Part 71

[Airspace Docket No. 01–AGL–07]

Proposed Modification of Class E Airspace; Brainerd, MN

AGENCY: Federal Aviation Administration (FAA), DOT.

ACTION: Notice of proposed rulemaking.

SUMMARY: This action proposes to modify Class E airspace at Brainerd, MN. An Area Navigation (RNAV) Standard Instrument Approach Procedure (SIAP) to Runway (Rwy) 05 has been developed for Brainerd-Crow Wing County Regional Airport. Controlled airspace extending upward from 700 feet or more above the surface of the earth is needed to contain aircraft executing this approach. This action would increase the radius of the existing controlled airspace for Brainerd-Crow Wing County Region Airport.

DATES: Comments must be received on or before February 17, 2002.

ADDRESSES: Send comments on the proposal in triplicate to: Federal Aviation Administration, Office of the Regional Counsel, AGL–7, Rules Docket No. 01–AGL–07, 2300 East Devon Avenue, Des Plaines, Illinois 60018.

The official docket may be examined in the Office of the Regional Counsel, Federal Aviation Administration, 2300 East Devon Avenue, Des Plaines, Illinois. An informal docket may also be examined during normal business hours at the Air Traffic Division, Airspace Branch, Federal Aviation Administration, 2300 East Devon Avenue, Des Plaines, Illinois.

FOR FURTHER INFORMATION CONTACT: Denis C. Burke, Air Traffic Division, Airspace Branch, AGL–520, Federal Aviation Administration, 2300 East Devon Avenue, Des Plaines, Illinois 60018, telephone (847) 294–7568.

SUPPLEMENTARY INFORMATION:

Comments Invited

Interested parties are invited to participate in this proposed rulemaking by submitting such written data, views, or arguments as they may desire.

Comments that provide the factual basis supporting the views and suggestions presented are particularly helpful in developing reasoned regulatory decisions on the proposal. Comments are specifically invited on the overall regulatory, aeronautical, economic, environmental, and energy-related aspects of the proposal. Communications should identify the airspace docket number and be submitted in triplicate to the address listed above. Commenters wishing the FAA to acknowledge receipt of their comments on this action must submit with those comments a self-addressed, stamped postcard on which the following statement is made: ''Comments to Airspace Docket No. 01–AGL–07.'' The postcard will be date/time stamped and returned to the commenter. All communications received on or before the specified closing date for comments will be considered before taking action on the proposed rule. The proposal contained in this action may be changed in light of comments received. All comments submitted will be available for examination in the Rules Docket, FAA, Great Lakes Region, Office of the Regional Counsel, 2300 East Devon Avenue, Des Plaines, Illinois, both before and after the closing date for comments. A report summarizing each substantive public contact with FAA personnel concerned with this rulemaking will be filed in the docket.

Availability of NPRM's

Any person may obtain a copy of this Notice of Proposed Rulemaking (NPRM) by submitting a request to the Federal Aviation Administration, Office of Public Affairs, Attention: Public Inquiry Center, APA–230, 800 Independence Avenue, SW., Washington, DC 20591, or by calling (202) 267–3484. Communications must identify the docket number of this NPRM. Persons interested in being placed on a mailing list for future NPRM's should also request a copy of Advisory Circular No. 11–2A, which describes the application procedure.

The Proposal

The FAA is considering an amendment to 14 CFR part 71 to modify Class E airspace at Brainerd, MN, by increasing the radius of the controlled airspace for Brainerd-Crow Wing County Regional Airport. Controlled airspace extending upward from 700 feet or more above the surface of the earth is needed to contain aircraft executing instrument approach procedures. The area would be depicted on appropriate aeronautical charts. Class E airspace areas extending upward from 700 feet or more above the surface of the earth are published in paragraph 6005 of FAA Order 7400.9J dated August 31, 2001, and effective September 16, 2001, which is incorporated by reference in 14 CFR 71.1. The Class E designations listed in this document would be published subsequently in the Order.

The FAA has determined that this proposed regulation only involves an establishment body of technical regulations for which frequent and routine amendments are necessary to keep them operationally current. Therefore this, proposed regulation—(1) is not a ''significant regulatory action'' under Executive Order 12866; (2) is not a ''significant rule'' under DOT Regulatory Policies and Procedures (44 FR 11034; February 26, 1979); and (3) does not warrant preparation of a Regulatory Evaluation as the anticipated impact is so minimal. Since this is a routine matter that will only affect air traffic procedures and air navigation, it is certified that this proposed rule will not have a significant economic impact on a substantial number of small entities under the criteria of the Regulatory Flexibility Act.

List of Subjects in 14 CFR Part 71

Airspace, Incorporation by reference, Navigation (air).

The Proposed Amendment

Accordingly, pursuant to the authority delegated to me, the Federal Aviation Administration proposes to amend 14 CFR part 71 as follows:

PART 71—DESIGNATION OF CLASS A, CLASS B, CLASS C, CLASS D, AND CLASS E AIRSPACE AREAS; AIRWAYS; ROUTES; AND REPORTING POINTS

1. The authority citation for part 71 continues to read as follows:

Authority: 49 U.S.C. 106(g), 40103, 40113, 40120; E.O. 10854, 24 FR 9565, 3 CFR, 1959–1963 Comp., p. 389.

§ 71.1 [Amended]

2. The incorporation by reference in 14 CFR 71.1 of the Federal Aviation Administration Order 7400.9J, Airspace Designations and Reporting Points, dated August 31, 2001, and effective September 16, 2001, is amended as follows:

* * * * *

Paragraph 6005 Class E airspace areas extending upward from 700 feet or more above the surface of the earth.

* * * * *

AGL WI E5 Brainerd, MN [Revised]

Brainerd-Crow Wing County Regional Airport, MN
(Lat. 46° 23′ 52″N., long. 94° 08′ 14″W.)

That airspace extending upward from 700 feet above the surface within 7.9-mile radius of the Brainerd-Crow Wing County Regional Airport, Brainerd, MN.

* * * * *

Issued in Des Plaines, Illinois, on December 5, 2001.

Nancy B. Shelton,

Manager, Air Traffic Division, Great Lakes Region.

[FR Doc. 02–1010 Filed 1–15–02; 8:45 am]

BILLING CODE 4910–13–M

DEPARTMENT OF TRANSPORTATION

Federal Aviation Administration

14 CFR Part 71

[Airspace Docket No. 01–AGL–09]

Proposed Modification of Class E Airspace; Green Bay, WI

AGENCY: Federal Aviation Administration (FAA), DOT.

ACTION: Notice of proposed rulemaking.

SUMMARY: This action proposes to modify Class E airspace at Green Bay, WI. An Area Navigation (RNAV) Standard Instrument Approach procedure (SIAP) to Runway (Rwy) 06, an RNAV SIAP Rwy 18, an RNAV SIAP Rwy 24, and an RNAV SIAP Rwy 36 has been developed for Austin-Straubel International Airport. Controlled airspace extending upward from 700 feet or more above the surface of the earth is needed to contain aircraft executing this approach. This action would add an extension for Austin-Straubel International Airport.

DATES: Comments must be received on or before February 17, 2002.

ADDRESSES: Send comments on the proposal in triplicate to: Federal Aviation Administration, Office of the Regional Counsel, AGL–7, Rules Docket No. 01–AG–09, 2300 East Devon Avenue, Des Plaines, Illinois 60018. The official docket may be examined in the Office of the Regional Counsel, Federal Aviation Administration, 2300 East Devon Avenue, Des Plaines, Illinois. An informal docket may also be examined during normal business hours at the Air Traffic Division, Airspace Branch, Federal Aviation Administration, 2300 East Devon Avenue, Des Plaines, Illinois.

FOR FURTHER INFORMATION CONTACT: Denis C. Burke, Air Traffic Division, Airspace Branch, AGL–520, Federal

Aviation Administration, 2300 East Devon Avenue, Des Plaines, Illinois 60018, telephone (847) 294–7568.

SUPPLEMENTARY INFORMATION:

Comments Invited

Interested parties are invited to participate in this proposed rulemaking by submitting such written data, views, or arguments as they may desire. Comments that provide the factual basis supporting the views and suggestions presented are particularly helpful in developing reasoned regulatory decisions on the proposal. Comments are specifically invited on the overall regulatory, aeronautical, economic, environmental, and energy-related aspects of the proposal. Communications should identify the airspace docket number and be submitted in triplicate to the address listed above. Commenters wishing the FAA to acknowledge receipt of their comments on this action must submit with those comments a self-addressed, stamped postcard on which the following statement is made: ''Comments to Airspace Docket No. 01–AGL–09.'' The postcard will be date/time stamped and returned to the commenter. All communications received on or before the specified closing date for comments will be considered before taking action on the proposed rule. The proposal contained in this action may be changed in light of comments received. All comments submitted will be available for examination in the Rules Docket, FAA, Great Lakes Region, Office of the Regional Counsel, 2300 east Devon Avenue, Des Plaines, Illinois, both before and after the closing date for comments. A report summarizing each substantive public contact with FAA personnel concerned with this rulemaking will be filed in the docket.

Availability of NPRM's

Any person may obtain a copy of this Notice of Proposed Rulemaking (NPRM) by submitting a request to the Federal Aviation Administration, Office of Public Affairs, Attention: Public Inquiry Center, APA–230, 800 Independence Avenue, SW., Washington, DC 20591, or by calling (202) 267–3484. Communications must identify the docket number of this NPRM. Persons interested in being placed on a mailing list for future NPRM's should also request a copy of Advisory Circular No. 11–2A, which describes the application procedure.

The Proposal

The FAA is considering an amendment to 14 CFR part 71 to modify Class E airspace at Green Bay, WI, by adding an extension of the controlled airspace for Austin-Straubel International Airport. Controlled airspace extending upward from 700 feet or more above the surface of the earth is needed to contain aircraft executing instrument approach procedures. The area would be depicted on appropriate aeronautical charts. Class E airspace areas extending upward from 700 feet or more above the surface of the earth are published in paragraph 6005 of FAA Order 7400.9J dated August 31, 2001, and effective September 16, 2001, which is incorporated by reference in 14 CFR 71.1. The Class E designations listed in this document would be published subsequently in the Order.

The FAA has determined that this proposed regulation only involves an establishment body of technical regulations for which frequent and routine amendments are necessary to keep them operationally current. Therefore this, proposed regulation—(1) is not a ''significant regulatory action'' under Executive Order 12866; (2) is not a ''significant rule'' under DOT Regulatory Policies and Procedures (44 FR 11034; February 26, 1979); and (3) does not warrant preparation of a Regulatory Evaluation as the anticipated impact is so minimal. Since this is a routine matter that will only affect air traffic procedures and air navigation, it is certified that this proposed rule will not have a significant economic impact on a substantial number of small entities under the criteria of the Regulatory Flexibility Act.

List of Subjects in 14 CFR Part 71

Airspace, Incorporation by reference, Navigation (air).

The Proposed Amendment

Accordingly, pursuant to the authority delegated to me, the Federal Aviation Administration proposes to amend 14 CFR part 71 as follows:

PART 71—DESIGNATION OF CLASS A, CLASS B, CLASS C, CLASS D, AND CLASS E AIRSPACE AREAS; AIRWAYS; ROUTES; AND REPORTING POINTS

1. The authority citation for part 71 continues to read as follows:

Authority: 49 U.S.C. 106(g), 40103, 40113, 40120, E.O. 10854, 24 FR 9565, 3 CFR, 1959–1963 Comp., p. 389.

§ 71.1 [Amended]

2. The incorporation by reference in 14 CFR 71.1 of the Federal Aviation Administration Order 7400.9J, Airspace Designations and Reporting Points, dated August 31, 2001, and effective September 16, 2001, is amended as follows:

* * * * *

Paragraph 6005 Class E airspace areas extending upward from 700 feet or more above the surface of the earth.

* * * * *

AGL WI E5 Green Bay, WI [REVISED]

Green Bay, Austin-Straubel International Airport, WI
(Lat. 44°29′06″N., long. 88°97′47″W.)

That airspace extending upward from 700 feet above the surface within 6.9 mile radius of the Austin-Straubel International Airport and within 2 miles each side of the 180° bearing from the Airport extending from the 6.9 mile radius to 12 miles south of the Airport.

* * * * *

Issued in Des Plaines, Illinois, on December 5, 2001.

Nancy B. Shelton,

Manager, Air Traffic Division, Great Lakes Region.

[FR Doc. 02–1009 Filed 1–15–02; 8:45 am]

BILLING CODE 4910–13–M

DEPARTMENT OF TRANSPORTATION

Federal Aviation Administration

14 CFR Part 71

[Airspace Docket No. 01–AGL–10]

Proposed Modification of Class D Airspace; Mosinee, WI; and Modification of Class E Airspace; Mosinee, WI

AGENCY: Federal Aviation Administration (FAA), DOT.

ACTION: Notice of proposed rulemaking.

SUMMARY: This action proposes to modify Class D airspace at Mosinee, WI, and modify Class E airspace at Mosinee, WI. An Area Navigation (RNAV) Standard Instrument Approach Procedure (SIAP) to Runway (Rwy) 08, an RNAV SIAP to Rwy 17, an RNAV SIAP to Rwy 26, and an RNAV SIAP to Rwy 35 have been developed for Central Wisconsin Airport. Controlled airspace extending upward from the surface of the earth is needed to contain aircraft executing this approach. This action would increase the radius of the existing Class D and Class E airspace for Central Wisconsin Airport.

DATES: Comments must be received on or before February 17, 2002.

ADDRESSES: Send comments on the proposal in triplicate to: Federal Aviation Administration, Office of the Regional Counsel, AGL–7, Rules Docket

No. 01–AGL–10, 2300 East Devon Avenue, Des Plaines, Illinois 60018.

The official docket may be examined in the Office of the Regional Counsel, Federal Aviation Administration, 2300 East Devon Avenue, Des Plaines, Illinois. An informal docket may also be examined during normal business hours at the Air Traffic Division, Airspace Branch, Federal Aviation Administration, 2300 East Devon Avenue, Des Plaines, Illinois.

FOR FURTHER INFORMATION CONTACT: Denis C. Burke, Air Traffic Division, Airspace Branch, AGL–520, Federal Aviation Administration, 2300 East Devon Avenue, Des Plaines, Illinois 60018, telephone (847) 294–7568.

SUPPLEMENTARY INFORMATION:

Comments Invited

Interested parties are invited to participate in this proposed rulemaking by submitting such written data, views, or arguments as they may desire. Comments that provide the factual basis supporting the views and suggestions presented are particularly helpful in developing reasoned regulatory decisions on the proposal. Comments are specifically invited on the overall regulatory, aeronautical, economic, environmental, and energy-related aspects of the proposal. Communications should identify the airspace docket number and be submitted in triplicate to the address listed above. Commenters wishing the FAA to acknowledge receipt of their comments on this action must submit with those comments a self-addressed, stamped postcard on which the following statement is made: ''Comments to Airspace Docket No. 01–AGL–10.'' The postcard will be date/time stamped and returned to the commenter. All communications received on or before the specified closing date for comments will be considered before taking action on the proposed rule. The proposal contained in this action may be changed in light of comments received. All comments submitted will be available for examination in the Rules Docket, FAA, Great Lakes Region, Office of the Regional Counsel, 2300 East Devon Avenue, Des Plaines, Illinois, both before and after the closing date for comments. A report summarizing each substantive public contact with FAA personnel concerned with this rulemaking will be filed in the docket.

Availability of NPRM's

Any person may obtain a copy of this Notice of Proposed Rulemaking (NPRM) by submitting a request to the Federal Aviation Administration, Office of Public Affairs, Attention: Public Inquiry Center, APA–230, 800 Independence Avenue, SW., Washington, DC 20591; or by calling (202) 267–3484. Communications must identify the docket number of this NPRM. Persons interested in being placed on a mailing list for future NPRM's should also request a copy of Advisory Circular No. 11–2A, which describes the application procedure.

The Proposal

The FAA is considering an amendment to 14 CFR part 71 to modify Class D airspace and Class E airspace at Mosinee, WI, by increasing the radius of the existing Class D airspace and Class E airspace for Central Wisconsin Airport. Controlled airspace extending upward from the surface of the earth is needed to contain aircraft executing instrument approach procedures. The area would be depicted on appropriate aeronautical charts. Class D airspace designations are published in paragraph 5000, Class E airspace areas extending upward from the surface of the earth are published in paragraph 6002, and Class E airspace areas extending upward from 700 feet or more above the surface of the earth are published in paragraph 6005, of FAA Order 7400.9J dated August 31, 2001, and effective September 16, 2001, which is incorporated by reference in 14 CFR 71.1. The Class D and Class E airspace designations listed in this document would be published subsequently in the Order.

The FAA has determined that this proposed regulation only involves an establishment body of technical regulations for which frequent and routine amendments are necessary to keep them operationally current. Therefore this, proposed regulation—(1) is not a ''significant regulatory action'' under Executive Order 12866; (2) is not a ''significant rule'' under DOT Regulatory Policies and Procedures (44 FR 11034; February 26, 1979); and (3) does not warrant preparation of a Regulatory Evaluation as the anticipated impact is so minimal. Since this is a routine matter that will only affect air traffic procedures and air navigation, it is certified that this proposed rule will not have a significant economic impact on a substantial number of small entities under the criteria of the Regulatory Flexibility Act.

List of Subjects in 14 CFR Part 71

Airspace, Incorporation by reference, Navigation (air).

The Proposed Amendment

Accordingly, pursuant to the authority delegated to me, the Federal Aviation Administration proposes to amend 14 CFR part 71 as follows:

PART 71—DESIGNATION OF CLASS A, CLASS B, CLASS C, CLASS D, AND CLASS E AIRSPACE AREAS; AIRWAYS; ROUTES; AND REPORTING POINTS

1. The authority citation for part 71 continues to read as follows:

Authority: 49 U.S.C. 106(g), 40103, 40113, 40120; E.O. 10854, 24 FR 9565, 3 CFR, 1959–1963 Comp., p. 389.

§ 71.1 [Amended]

2. The incorporation by reference in 14 CFR 71.1 of the Federal Aviation Administration Order 7400.9J, Airspace Designations and Reporting Points, dated August 31, 2001, and effective September 16, 2001, is amended as follows:

* * * * *

Paragraph 5000 Class D airspace.

* * * * *

AGL WI D Mosinee, WI [REVISED]

Central Wisconsin Airport, WI
(Lat. 44° 46′ 39″N., long. 89° 40′ 00″W.)

That airspace extending upward from the surface to and including 3,800 feet MSL within a 4.5-mile radius of the Central Wisconsin Airport. This Class D airspace area is effective during the specific dates and times established in advance by Notice to Airmen. The effective date and time will thereafter be continuously published in the Airport/Facility Directory.

* * * * *

Paragraph 6002 Class E airspace areas extending upward from the surface of the earth.

* * * * *

AGL WI E2 Mosinee, WI [REVISED]

Central Wisconsin Airport, WI
(Lat. 44° 46′ 39″N., long. 89° 40′ 00″W.)

That airspace extending upward from the surface within 4.5-mile radius of the Central Wisconsin Airport. This Class E airspace area is effective during the specific dates and times established in advance by Notice to Airmen. The effective date and time will thereafter be continuously published in the Airport/Facility Directory.

* * * * *

Paragraph 6005 Class E airspace areas extending upward from 700 feet or more above the surface of the earth.

* * * * *

AGL WI E5 Mosinee, WI [REVISED]

Central Wisconsin Airport, WI
(Lat. 44° 46′ 39″N., long. 89° 40′ 00″W.)
Wausau VORTAC
(Lat. 44° 50′ 48″N., long. 89° 35′ 12″W.)

That airspace extending upward from 700 feet above the surface within 7.0-mile radius of the Central Wisconsin Airport, and within 4 miles each side of the Wausau VORTAC 039° radial extending from the 6.9-mile radius to 10.9 miles northeast of the airport, excluding the airspace within the Wausau, WI Class E airspace area.

Issued in Des Plaines, Illinois, on December 5, 2001.

Nancy B. Shelton,

Manager, Air Traffic Division, Great Lakes Region.

[FR Doc. 02–1008 Filed 1–15–02; 8:45 am]

BILLING CODE 4910–13–M

DEPARTMENT OF TRANSPORTATION

Federal Aviation Administration

14 CFR Part 71

[Airspace Docket No. 01–AGL–12]

Proposed Creation of Class E Airspace; Boyceville, WI

AGENCY: Federal Aviation Administration (FAA), DOT.

ACTION: Notice of proposed rulemaking.

SUMMARY: This action proposes to create Class E airspace at Boyceville, WI. An Area Navigation (RNAV) Standard Instrument Approach Procedure (SIAP) to Runway (Rwy) 08, and an RNAV SIAP Rwy 26 have been developed for Boyceville Municipal Airport. Controlled airspace extending upward from 700 feet or more above the surface of the earth is needed to contain aircraft executing this approach. This action would create Class E airspace for Boyceville Municipal Airport .

DATES: Comments must be received on or before February 17, 2002.

ADDRESSES: Send comments on the proposal in triplicate to: Federal Aviation Administration, Office of the Regional Counsel, AGL–7, Rules Docket No. 01–AGL–12, 2300 East Devon Avenue, Des Plaines, Illinois 60018.

The official docket may be examined in the Office of the Regional Counsel, Federal Aviation Administration, 2300 East Devon Avenue, Des Plaines, Illinois. An informal docket may also be examined during normal business hours at the Air Traffic Division, Airspace Branch, Federal Aviation Administration, 2300 East Devon Avenue, Des Plaines, Illinois.

FOR FURTHER INFORMATION CONTACT: Denis C. Burke, Air Traffic Division, Airspace Branch, AGL–520,Federal Aviation Administration, 2300 East Devon Avenue, Des Plaines, Illinois 60018, telephone (847) 294–7568.

SUPPLEMENTARY INFORMATION:

Comments Invited

Interested parties are invited to participate in this proposed rulemaking by submitting such written data, views, or arguments as they may desire. Comments that provide the factual basis supporting the views and suggestions presented are particularly helpful in developing reasoned regulatory decisions on the proposal. Comments are specifically invited on the overall regulatory, aeronautical, economic, environmental, and energy-related aspects of the proposal. Communications should identify the airspace docket number and be submitted in triplicate to the address listed above. Commenters wishing the FAA to acknowledge receipt of their comments on this action must submit with those comments a self-addressed, stamped postcard on which the following statement is made: ''Comments to Airspace Docket No. 01–AGL–12.'' The postcard will be date/time stamped and returned to the commenter. All communications received on or before the specified closing date for comments will be considered before taking action on the proposed rule. The proposal contained in this action may be changed in light of comments received. All comments submitted will be available for examination in the Rules Docket, FAA, Great Lakes Region, Office of the Regional Counsel, 2300 East Devon Avenue, Des Plaines, Illinois, both before and after the closing date for comments. A report summarizing each substantive public contact with FAA personnel concerned with this rulemaking will be filed in the docket.

Availability of NPRM's

Any person may obtain a copy of this Notice of Proposed Rulemaking (NPRM) by submitting a request to the Federal Aviation Administration, Office of Public Affairs, Attention: Public Inquiry Center, APA–230, 800 Independence Avenue, SW, Washington, DC 20591, or by calling (202) 267–3484. Communications must identify the docket number of this NPRM. Persons interested in being placed on a mailing list for future NPRM's should also request a copy of Advisory Circular No. 11–2A, which describes the application procedure.

The Proposal

The FAA is considering an amendment to 14 CFR part 71 to establish Class E airspace at Boyceville, WI, by creating controlled airspace for Boyceville Municipal Airport. Controlled airspace extending upward from 700 feet or more above the surface of the earth is needed to contain aircraft executing instrument approach procedures. The area would be depicted on appropriate aeronautical charts. Class E airspace areas extending upward from 700 feet or more above the surface of the earth are published in paragraph 6005 of FAA Order 7400.9J dated August 31, 2001, and effective September 16, 2001, which is incorporated by reference in 14 CFR 71.1. The Class E designations listed in this document would be published subsequently in the Order.

The FAA has determined that this proposed regulation only involves an establishment body of technical regulations for which frequent and routine amendments are necessary to keep them operationally current. Therefore this, proposed regulation—(1) is not a ''significant regulatory action'' under Executive Order 12866; (2) is not a ''significant rule'' under DOT Regulatory Policies and Procedures (44 FR 11034; February 26, 1979); and (3) does not warrant preparation of a Regulatory Evaluation as the anticipated impact is so minimal. Since this is a routine matter that will only affect air traffic procedures and air navigation, it is certified that this proposed rule will not have a significant economic impact on a substantial number of small entities under the criteria of the Regulatory Flexibility Act.

List of Subjects in 14 CFR Part 71

Airspace, Incorporation by reference, Navigation (air).

The Proposed Amendment

Accordingly, pursuant to the authority delegated to me, the Federal Aviation Administration proposes to amend 14 CFR part 71 as follows:

PART 71—DESIGNATION OF CLASS A, CLASS B, CLASS C, CLASS D, AND CLASS E AIRSPACE AREAS; AIRWAYS; ROUTES; AND REPORTING POINTS

1. The authority citation for part 71 continues to read as follows:

Authority: 49 U.S.C. 106(g), 40103, 40113, 40120; E.O. 10854, 24 FR 9565, 3 CFR, 1959–1963 Comp., p. 389.

§ 71.1 [Amended]

2. The incorporation by reference in 14 CFR 71.1 of the Federal Aviation Administration Order 7400.9J, Airspace Designations and Reporting Points, dated August 31, 2001, and effective September 16, 2001, is amended as follows:

* * * * *

Paragraph 6005 Class E airspace areas extending upward from 700 feet or more above the surface of the earth.

* * * * *

AGL WI E5 Boyceville, WI [NEW]

Boyceville Municipal Airport, WI
Lat. 45°02′39″N., long. 92°01′13″W.)

That airspace extending upward from 700 feet above the surface within an 6.4-mile radius of the Boyceville Municipal Airport, excluding that airspace within the Menomonie, WI, class E–5 airspace area.

* * * * *

Issued in Des Plaines, Illinois, on December 5, 2001.

Nancy B. Shelton,

Manager, Air Traffic Division, Great Lakes Region.

[FR Doc. 02–1015 Filed 1–15–02; 8:45 am]

BILLING CODE 4910–13–M

DEPARTMENT OF TRANSPORTATION

Federal Aviation Administration

14 CFR Part 71

[Airspace Docket No. 01–AGL–13]

Proposed Creation of Class E Airspace; Walhalla, ND

AGENCY: Federal Aviation Administration (FAA), DOT.

ACTION: Notice of proposed rulemaking.

SUMMARY: This action proposes to create Class E airspace at Walhalla, ND. An Area Navigation (RNAV) Standard Instrument Approach Procedure (SIAP) to Runway (Rwy) 33 has been developed for Walhalla Municipal Airport. Controlled airspace extending upward from 700 feet or more above the surface of the earth is needed to contain aircraft executing this approach. This action would create Class E airspace for Walhalla Municipal Airport.

DATES: Comments must be received on or before February 17, 2002.

ADDRESSES: Send comments on the proposal in triplicate to: Federal Aviation Administration, Office of the Regional Counsel, AGL–7, Rules Docket No. 01–AGL–13, 2300 East Devon Avenue, Des Plaines, Illinois 60018.

The official docket may be examined in the Office of the Regional Counsel, Federal Aviation Administration, 2300 East Devon Avenue, Des Plaines, Illinois. An informal docket may also be examined during normal business hours at the Air Traffic Division, Airspace Branch, Federal Aviation Administration, 2300 East Devon Avenue, Des Plaines, Illinois.

FOR FURTHER INFORMATION CONTACT: Denis C. Burke, Air Traffic Division, Airspace Branch, AGL–520, Federal Aviation Administration, 2300 East Devon Avenue, Des Plaines, Illinois 60018, telephone (847) 294–7568.

SUPPLEMENTARY INFORMATION:

Comments Invited

Interested parties are invited to participate in this proposed rulemaking by submitting such written data, views, or arguments as they may desire. Comments that provide the factual basis supporting the views and suggestions presented are particularly helpful in developing reasoned regulatory decisions on the proposal. Comments are specifically invited on the overall regulatory, aeronautical, economic, environmental, and energy-related aspects of the proposal. Communications should identify the airspace docket number and be submitted in triplicate to the address listed above. Commenters wishing the FAA to acknowledge receipt of their comments on this action must submit with those comments a self-addressed, stamped postcard on which the following statement is made: ''Comments to Airspace Docket No. 01–AGL–13.'' The postcard will be date/time stamped and returned to the commenter. All communications received on or before the specified closing date for comments will be considered before taking action on the proposed rule. The proposal contained in this action may be changed in light of comments received. All comments submitted will be available for examination in the Rules Docket, FAA, Great Lakes Region, Office of the Regional Counsel, 2300 East Devon Avenue, Des Plaines, Illinois, both before and after the closing date for comments. A report summarizing each substantive public contact with FAA personnel concerned with this rulemaking will be filed in the docket.

Availability of NPRM's

Any persons may obtain a copy of this Notice of Proposed Rulemaking (NPRM) by submitting a request to the Federal Aviation Administration, Office of Public Affairs, Attention: Public Inquiry Center, APA–230, 800 Independence Avenue, SW., Washington, DC 20591, or by calling (202) 267–3484. Communications must identify the docket number of this NPRM. Persons interested in being placed on a malign list for future NPRM's should also request a copy of Advisory Circular No. 11–2A, which describes the application procedure.

The Proposal

The FAA is considering an amendment to 14 CFR part 71 to establish Class E airspace at Walhalla, ND, by creating controlled airspace for Walhalla Municipal Airport. Controlled airspace extending upward from 700 feet or more above the surface of the earth is needed to contain aircraft executing instrument approach procedures. The area would be depicted on appropriate aeronautical charts. Class E airspace areas extending upward from 700 feet or more above the surface of the earth are published in paragraph 6005 of FAA Order 7400.9J dated August 31, 2001, and effective September 16, 2001, which is incorporated by reference in 14 CFR part 71.1. The Class E designations listed in this document would be published subsequently in the Order.

The FAA has determined that this proposed regulation only involves an establishment body of technical regulations for which frequent and routine amendments are necessary to keep them operationally current. Therefore this, proposed regulation—(1) is not a ''significant regulatory action'' under Executive Order 12866; (2) is not a ''significant rule'' under DOT Regulatory Policies and Procedures (44 FR 11034; February 26, 1979); and (3) does not warrant preparation of a Regulatory Evaluation as the anticipated impact is so minimal. Since this is a routine matter that will only affect air traffic procedures and air navigation, it is certified that this proposed rule will not have a significant economic impact on a substantial number of small entities under the criteria of the Regulatory Flexibility Act.

List of Subjects in 14 CFR Part 71

Airspace, Incorporation by reference, Navigation (air).

The Proposed Amendment

Accordingly, pursuant to the authority delegated to me, the Federal Aviation Administration proposes to amend 14 CFR part 71 as follows:

PART 71—DESIGNATION OF CLASS A, CLASS B, CLASS C, CLASS D, AND CLASS E AIRSPACE AREAS; AIRWAYS; ROUTES; AND REPORTING POINTS

1. The authority citation for part 71 continues to read as follows:

Authority: 49 U.S.C. 106(g), 40103, 40113, 40120; E.O. 10854, 24 FR 9565, 3 CFR, 1959–1963 Comp., p. 389.

§ 71.1 [Amended]

2. The incorporation by references in 14 CFR 71.1 of the Federal Aviation Administration Order 7400.9J, Airspace Designations and Reporting Points, dated August 31, 2001, and effective September 16, 2001, is amended as follows:

* * * * *

Paragraph 6005 Class E airspace areas extending upward from 700 feet or more above the surface of the earth.

* * * * *

AGL ND E5 Walhalla, ND [NEW]

Walhalla Municipal Airport, ND
(Lat. 48°56′26″N., long. 97°54′10″W.)
Devils Lake VOR/DME
(Lat. 48°06′55″N., long. 98°54′45″W.)

That airspace extending upward from 700 feet above the surface within an 6.3-mile radius of the Walhalla Municipal Airport, excluding that airspace north of lat. 49°00′00″N., and that airspace extending upward from 1200 feet above the surface bounded by a line beginning at lat. 49°00′00″N., long. 97°30′00″W., to lat., 48°48′00″N., long. 97°30′00″W., to lat. 48°22′00″N., long. 98°31′00″W., via the Devils Lake VOR/DME 22 mile radius counter clockwise to long. 99°00′00″W., to lat. 49°00′00″N., long. 99°00′00″W., to point of beginning.

* * * * *

Issued in Des Plaines, Illinois, on December 5, 2001.

Nancy B. Shelton,

Manager, Air Traffic Division, Great Lake Region.

[FR Doc. 02–1011 Filed 1–15–02; 8:45 am]

BILLING CODE 4910–13–M

DEPARTMENT OF TRANSPORTATION

Federal Aviation Administration

14 CFR Part 71

[Airspace Docket No. 01–AGL–14]

Proposed Modification of Class D Airspace; Columbus, OH

AGENCY: Federal Aviation Administration (FAA), DOT.

ACTION: Notice of proposed rulemaking.

SUMMARY: This action proposes to modify Class D airspace at Columbus, OH. A cutout in the Bolton Field Class D airspace is currently in place between 060 degrees and 105 degrees, from a 1.3-mile radius of the airport. This cutout exists to protect South Columbus airport which has since been closed. This action would revert the airspace contained in the cutout back to Bolton Field Class D airspace.

DATES: Comments must be received on or before February 17, 2002.

ADDRESSES: Send comments on the proposal in triplicate to: Federal Aviation Administration, Office of the Regional Counsel, AGL–7, Rules Docket No. 01–AGL–14, 2300 East Devon Avenue, Des Plaines, Illinois 60018.

The official docket may be examined in the Office of the Regional Counsel, Federal Aviation Administration, 2300 East Devon Avenue, Des Plaines, Illinois. An informal docket may also be examined during normal business hours at the Air Traffic Division, Airspace Branch, Federal Aviation Administration, 2300 East Devon Avenue, Des Plaines, Illinois.

FOR FURTHER INFORMATION CONTACT: Denis C. Burke, Air Traffic Division, Airspace Branch, AGL–520, Federal Aviation Administration, 2300 East Devon Avenue, Des Plaines, Illinois 60018, telephone (847) 294–7568.

SUPPLEMENTARY INFORMATION:

Comments Invited

Interested parties are invited to participate in this proposed rulemaking by submitting such written data, views, or arguments as they may desire. Comments that provide the factual basis supporting the views and suggestions presented are particularly helpful in developing reasoned regulatory decisions on the proposal. Comments are specifically invited on the overall regulatory, aeronautical, economic, environmental, and energy-related aspects of the proposal. Communications should identify the airspace docket number and be submitted in triplicate to the address listed above. Commenters wishing the FAA to acknowledge receipt of their comments on this action must submit with those comments a self-addressed, stamped postcard on which the following statement is made: ''Comments to Airspace Docket No. 01–AGL–14.'' The postcard will be date/time stamped and returned to the commenter. All communications received on or before the specified closing date for comments will be considered before taking action on the proposed rule. The proposal contained in this action may be changed in light of comments received. All comments submitted will be available for examination in the Rules Docket, FAA, Great Lakes Region, Office of the Regional Counsel, 2300 East Devon Avenue, Des Plaines, Illinois, both before and after the closing date for comments. A report summarizing each substantive public contact with FAA personnel concerned with this rulemaking will be filed in the docket.

Availability of NPRM's

Any person may obtain a copy of this Notice of Proposed rulemaking (NPRM) by submitting a request to the Federal Aviation Administration, Office of Public Affairs, Attention: Public Inquiry Center, APA–230, 800 Independence Avenue, SW., Washington, DC 20591, or by calling (202) 267–3484. Communications must identify the docket number of this NPRM. Persons interested in being placed on a mailing list for future NPRM's should also request a copy of Advisory Circular No. 11–2A, which describes the application procedure.

The Proposal

The FAA is considering an amendment to 14 CFR part 71 to modify Class D airspace at Columbus, OH, by changing the Bolton Field Class D Airspace legal description. The new description would include a former cutout established to protect the South Columbus Airport which has since been closed. Controlled airspace extending upward from the surface is needed to contain aircraft executing instrument approach procedures. The area would be depicted on appropriate aeronautical charts. Class D airspace areas are published in paragraph 500 of FAA Order 7400.9J dated August 31, 2001, and effective September 16, 2001, which is incorporated by reference in 14 CFR part 71.1. The Class D designations listed in this document would be published subsequently in the Order.

The FAA has determined that this proposed regulation only involves an establishment body of technical regulations for which frequent and routine amendments are necessary to keep them operationally current. Therefore, this proposed regulation—(1) is not a ''significant regulatory action'' under Executive Order 12866; (2) is not a ''significant rule'' under DOT Regulatory Policies and Procedures (44 FR 11034; February 26, 1979); and (3) does not warrant preparation of a Regulatory Evaluation as the anticipated impact is so minimal. Since this is a routine matter that will only affect air traffic procedures and air navigation, it is certified that this proposed rule will not have a significant economic impact on a substantial number of small entities under the criteria of the Regulatory Flexibility Act.

List of Subjects in 14 CFR Part 71

Airspace, Incorporation by reference, Navigation (air).

The Proposed Amendment

Accordingly, pursuant to the authority delegated to me, the Federal

Aviation Administration proposes to amend 14 CFR part 71 as follows:

PART 71—DESIGNATION OF CLASS A, CLASS B, CLASS C, CLASS D, AND CLASS E AIRSPACE AREAS; AIRWAYS; ROUTES, AND REPORTING POINTS

1. The authority citation for part 71 continues to read as follows:

Authority: 49 U.S.C. 106(g), 40103, 40113, 40120; E.O. 10854, 24 FR 9565, 3 CFR, 1959–1963 Comp., p. 389.

71.1 [Amended]

2. The incorporation by reference in 14 CFR 71.1 of the Federal Aviation Administration Order 7400.9J, Airspace Designations and Reporting Points, dated August 31, 2001, and effective September 16, 2001, is amended as follows:

* * * * *

Paragraph 5000 Class D airspace areas extending upward from the surface of the earth.

* * * * *

AFGL OH D Columbus, OH [REVISED]

Columbus, Bolton Filed Airport, OH
(Lat. 39°54′03″N., long. 83°08′14″W.)

That airspace extending upward from the surface to and including 3,400 feet MSL within a 3.9-mile radius of Bolton Field Airport, extending that portion beyond a 1.9-mile radius of the Bolton Field Airport bearing 290° to 325°, excluding that airspace within the Port Columbus International Airport, OH Class C airspace area. This Class D airspace area is effective during the specific dates and times established in advance by a Notice to Airman. The effective dates and time will thereafter be continuously published in the Airport/Facility Directory.

* * * * *

Nancy B. Shelton,

Acting Manager, Air Traffic Division, Great Lakes Region.

[FR Doc. 02–1007 Filed 1–15–02; 8:45 am]

BILLING CODE 4910–13–M

RAILROAD RETIREMENT BOARD

20 CFR Part 345

RIN 3220–AB52

Employers' Contributions and Contribution Reports

AGENCY: Railroad Retirement Board.

ACTION: Proposed rule.

SUMMARY: The Railroad Retirement Board (Board) proposes to amend its regulations to permit the filing of contribution reports via the Internet. The Government Paperwork Elimination Act provides that Federal agencies are required by October 21, 2003, to provide ''for the option of the electronic maintenance, submission, or disclosure of information, when practicable as a substitute for paper''. The proposed changes to part 345 will permit the filing of Form DC–1, ''Employer's Quarterly Report of Contributions Under the Railroad Unemployment Insurance Act'' electronically.

DATES: Submit comments on or before March 18, 2002.

ADDRESSES: Address any comments concerning this proposed rule to Beatrice Ezerski, Secretary to the Board, Railroad Retirement Board, 844 North Rush Street, Chicago, Illinois 60611–2092.

FOR FURTHER INFORMATION CONTACT: Marguerite P. Dadabo, Assistant General Counsel, (312) 751–4945, TTD (312) 751–4701.

SUPPLEMENTARY INFORMATION: The amendments would revise sections of part 345 of the Board's regulations (20 CFR part 345) to permit the filing of employer contribution reports via the Internet. The Government Paperwork Elimination Act, Pub. L. 105–277 §§ 1701–1710 (codified as 44 U.S.C. 3504n) provides that Federal agencies are required by October 21, 2003, to provide ''for the option of the electronic maintenance, submission, or disclosure of information, when practicable as a substitute for paper''. The proposed amendments to part 345 will permit the filing of Form DC–1, ''Employer's Quarterly Report of Contributions Under the Railroad Unemployment Insurance Act'' electronically.

The revision of § 345.111 provides that if the DC–1 is filed electronically, no duplicate filing is required. The revision to § 345.113 provides that the DC–1 may be filed electronically through the Board's agent. That section is further amended to provide that if the DC–1 is filed electronically, no further authentication is required. The paper Form DC–1 must be signed. However, with submission of the DC–1 electronically, the Board intends to use a user-ID/PIN/Password system for the submission of the form as a substitute for a required signature.

Employers currently use a user-ID/PIN/password system to access RRBLINK and make electronic tax deposits. Form DC–1 is being added to the existing system. The user-ID/PIN/password system was established under a Memorandum of Understanding between Firstar Bank and the U.S. Department of the Treasury. A PIN/password system is used to access the pay.gov site to which the RRBLINK system will eventually migrate. The pay.gov site is operated by U.S. Department of the Treasury. Such a system also is consistent with the guidance provided by the Department of Justice regarding the use of electronic processes.

The revision to § 345.114 permits the use of an electronic version of the DC–1 that can be accessed from the Board's financial agent. Section 345.115 has been revised to provide that the DC–1, if filed electronically, may be filed with the Board's designee.

Section 345.124 has been revised to clarify that if an employer wishes to appeal the amount of the contribution, interest, or penalty, the procedure in that section is to be followed. Section 345.307 has been revised to clarify that if the employer wishes to protest the contribution rate, the procedure in that section is to be followed. In addition, the title of the person who hears such a protest has been revised due to an agency reorganization from the ''Director of Unemployment and Sickness Insurance'' to the ''Director of Assessment and Training'.

The Board, with the concurrence of the Office of Management and Budget, has determined that this is not a significant regulatory action under Executive Order 12866. Therefore, no regulatory analysis is required. The Office of Management and Budget has approved information collections associated with this rule under control number 3220–0012.

List of Subjects in 20 CFR Part 345

Electronic filing, Paperwork elimination, Railroad unemployment insurance, Reporting and recordkeeping requirements.

For the reasons set out in the preamble, the Railroad Retirement Board proposes to amend title 20, chapter II, Part 345 of the Code of Federal Regulations as follows:

PART 345—EMPLOYERS' CONTRIBUTIONS AND CONTRIBUTION REPORTS

1. The authority citation for part 345 continues to read as follows:

Authority: 45 U.S.C. 362(1).

2. Section 345.111 of Subpart B is revised to read as follows:

§ 345.111 Contribution reports.

(a) *General.* (1) Except as provided in paragraph (a)(2) of this section, every employer shall, for each calendar quarter of each year, prepare a contribution report, in duplicate, on Form DC–1. If the Form DC–1 is filed

electronically, no duplicate submission is required.

(2) Contribution reports of employers who are required by State law to pay compensation on a weekly basis shall include with respect to such compensation all payroll weeks in which all or the major part of the compensation falls within the period for which the reports are required.

(b) *Compensation to be reported on Form DC–1.* Employers shall enter on the employer's quarterly contribution report, prior to any additions or subtractions, the amount of creditable compensation appearing on payrolls or other disbursement documents for the corresponding quarter as the amount of creditable compensation from which the contribution payable for that quarter is to be computed.

(Approved by the Office of Management and Budget under control number 3220–0012)

3. Section 345.113 of Subpart B is revised to read as follows:

§ 345.113 Execution of contribution reports.

(a) Each contribution report on Form DC–1 shall be signed by hand by:

(1) The individual, if the employer is an individual;

(2) The president, vice president, or other duly authorized officer, if the employer is a corporation; or

(3) A responsible and duly authorized member or officer having knowledge of its affairs if the employer is a partnership or other unincorporated organization.

(b) The Form DC–1 may be filed electronically through the Board's authorized agent. If filed electronically, no further authentication is required.

4. Section 345.114 of Subpart B is revised to read as follows:

§ 345.114 Prescribed forms for contribution reports.

Each employer's contribution report, together with any prescribed copies and supporting data, shall be filled out in accordance with the instructions and regulations applicable thereto. The prescribed forms may be obtained from or accessed by contacting the Board. An employer will not be excused from making a contribution report for the reason that no form has been furnished to such employer. Application should be made to the Board for the prescribed forms in ample time to have the contribution report prepared, verified, and filed with the Board on or before the due date. Contribution reports that have not been so prepared will not be accepted and shall not be considered filed for purposes of § 345.115 of this part. In case the prescribed form has not been obtained, a statement made by the employer disclosing the period covered and the amount of compensation with respect to which the contribution is required may be accepted as a tentative contribution report if accompanied by the amount of contribution due. If filed within the prescribed time, the statements so made will relieve the employer from liability for any penalty imposed under this part for the delinquent filing of the contribution report provided that the failure to file a contribution report on the prescribed form was due to reasonable cause and not due to willful neglect, *and provided further*, that within 30 days after receipt of the tentative report, such tentative report is supplemented by a contribution report made on the proper form. (Approved by the Office of Management and Budget under control number 3220–0012)

5. Section 345.115 of Subpart B is revised to read as follows:

§ 345.115 Place and time for filing contribution reports.

Each employer shall file its contribution report with the Chief Financial Officer, Railroad Retirement Board, 844 North Rush Street, Chicago, Illinois, 60611–2092, or the Chief Financial Officer's designee. The employer's contribution report for each quarterly period shall be filed on or before the last day of the calendar month following the period for which it is made. If such last day falls on Saturday, Sunday, or a national legal holiday, the report may be filed on the next following business day. If mailed, reports must be postmarked on or before the date on which the report is required to be filed.

6. Section 345.124 of Subpart B is revised to read as follows:

§ 345.124 Right to appeal the amount of a contribution, interest, or penalty.

(a) Except as otherwise provided, an employer may seek administrative review of any determination with respect to any contribution, interest, or penalty made under this part by filing a request for reconsideration with the Chief Financial Officer within 30 days after the mailing of notice of such determination. An employer shall have a right to appeal to the Board from any reconsideration decision under this section by filing notice of appeal to the Secretary to the Board within 14 days after the mailing of the decision on reconsideration. Upon receipt of a notice of an appeal, the Board may designate one of its officers or employees to receive evidence and report to the Board under the procedures set forth in part 319 of this chapter. An appeal of the contribution rate is made under § 345.307 of this part.

(b) Any appeal filed under this part shall not relieve the employer from filing any reports or paying any contribution required under this part nor stay the collection thereof. Upon the request of an employer, the Board may relieve the employer of any obligation required under this part pending an appeal. Unless specifically provided by the Board, such relief shall not stay the accrual of interest on any disputed amount as provided for in § 345.122 of this part.

7. Section 345.307 of Subpart D is revised to read as follows:

§ 345.307 Rate protest.

(a) *Request for reconsideration.* An employer may appeal a determination of a contribution rate computed under this part by filing a request for reconsideration with the Director of Assessment and Training within 90 days after the date on which the Board notified the employer of its rate of contribution for the next ensuing calendar year. Within 45 days of the receipt of a request for reconsideration, the Director shall issue a decision on the protest.

(b) *Appeal to the Board.* An employer aggrieved by the decision of the Director of Assessment and Training under paragraph (a) of this section may appeal to the Board. Such appeal shall be filed with the Secretary to the Board within 30 days after the date on which the Director notified the employer of the decision on reconsideration. The Board may decide such appeal without a hearing or, in its discretion, may refer the matter to a hearings officer pursuant to part 319 of this chapter.

(c) *Decision of the Board final.* Subject to judicial review provided for in section 5(f) of the RUIA, the decision of the Board under paragraph (b) of this section is final with respect to all issues determined therein.

(d) *Waiver of time limits.* A request for reconsideration or appeal under this section shall be forfeited if the request or appeal is not filed within the time prescribed, unless reasonable cause, as defined in this part, for failure to file timely is shown.

(e) *Rate pending review.* Pending review of the protested rate, the employer shall continue to pay contributions at such rate. Any adjustment in the contributions paid at such rate as the result of an appeal shall be in accordance with § 345.118 of this part.

(f) The amount of a contribution, interest, or penalty may be protested in accord with § 345.124 of this part.

By Authority of the Board.

Dated: January 10, 2002.

Beatrice Ezerski,

Secretary to the Board.

[FR Doc. 02–1095 Filed 1–15–02; 8:45 am]

BILLING CODE 7905–01–P

ENVIRONMENTAL PROTECTION AGENCY

40 CFR Part 86

[AMS–FRL–7129–2]

RIN 2060–AJ73

Control of Air Pollution From New Motor Vehicles and New Motor Vehicle Engines; Proposed Non-Conformance Penalties for 2004 and Later Model Year Emission Standards for Heavy-Duty Diesel Engines and Heavy-Duty Diesel Vehicles

AGENCY: Environmental Protection Agency (EPA).

ACTION: Notice of proposed rulemaking.

SUMMARY: EPA is proposing that nonconformance penalties (NCPs) be made available for the 2004 and later model year non-methane hydrocarbons and nitrogen oxides (NMHC+NO_X) standard for heavy-duty diesel engines and vehicles. In general, the availability of NCPs allows a manufacturer of heavy-duty engines (HDEs) or heavy-duty vehicles (HDVs) (which include heavy light-duty trucks) whose engines or vehicles fail to conform with certain applicable emission standards, but do not exceed a designated upper limit, to be issued a certificate of conformity upon payment of a monetary penalty. The proposed upper limit associated with the 2004 emission standard for NMHC+NO_X is 4.5 grams per brake-horsepower-hour for light and medium heavy-duty engines and urban buses, and 6.0 grams per brake-horsepower-hour for heavy heavy-duty engines.

DATES: *Public comment:* We must receive your comments by March 18, 2002.

Public hearing: We will hold a public hearing regarding this proposed rule on February 15, 2002, beginning at 10:00 a.m.

ADDRESSES: *Comments:* We must receive your comments by the date indicated under **DATES** above. Send paper copies of written comments (in duplicate if possible) to the contact person listed below. In your correspondence, refer to Docket A–2000–30. See Section VI.B for more information on comment procedures.

Public hearing: We will hold a public hearing on February 15, 2002 at the Washington Dulles Airport Marriott, 45020 Aviation Drive, Dulles, Virginia 20166. Phone: (703–471–9500). If you want to testify at the hearing, notify the contact person listed below at least ten days before the date of the hearing. See Section VI.B for more information on the public-hearing procedures.

Public docket: EPA's Air Docket makes materials related to this rulemaking available for review in Docket No. A–2001–30 located at U.S. Environmental Protection Agency (EPA), Air Docket (6102), Room M–1500, 401 M. Street, SW, Washington, DC 20460 (on the ground floor in Waterside Mall) from 8 a.m. to 5:30 p.m., Monday through Friday, except on government holidays. You can reach the Air Docket by telephone at (202) 260–4400. We may charge a reasonable fee for copying docket materials, as provided in 40 CFR part 2.

FOR FURTHER INFORMATION CONTACT: Margaret Borushko, U.S. EPA, National Vehicle and Fuels Emission Laboratory, 2000 Traverwood, Ann Arbor, MI 48105; Telephone (734) 214–4334; Fax: (734) 214–4816; E-mail: borushko.margaret@epa.gov.

SUPPLEMENTARY INFORMATION:

Regulated Entities

This proposed action would affect you if you produce or import new heavy-duty diesel engines which are intended for use in highway vehicles such as trucks and buses or heavy-duty highway vehicles. The table below gives some examples of entities that may have to follow the proposed regulations. But because these are only examples, you should carefully examine the proposed and existing regulations in 40 CFR part 86. If you have questions, call the person listed in the **FOR FURTHER INFORMATION CONTACT** section above.

Category	NAICS [a] Codes	SIC Codes [b]	Examples of potentially regulated entities
Industry	336112 336120	3711	Engine and truck manufacturers

[a] North American Industry Classification System (NAICS).
[b] Standard Industrial Classification (SIC) system code.

Access to Rulemaking Documents Through the Internet

Today's proposal is available electronically on the day of publication from the Environmental Protection Agency Internet Web site listed below. Electronic copies of the preamble, regulatory language, Draft Technical Support Document, and other documents associated with today's proposal are available from the EPA Office of Transportation and Air Quality (formerly the Office of Mobile Sources) Web site listed below shortly after the rule is signed by the Administrator. This service is free of charge, except any cost that you incur for connecting to the Internet.

Environmental Protection Agency Web Site: *http://www.epa.gov/fedrgstr/*

(Either select a desired date or use the Search feature.)

Office of Transportation and Air Quality (OTAQ) Web Site: *http://www.epa.gov/otaq/*

(Look in ''What's New'' or under the ''Heavy Trucks/Buses'' topic.)

Please note that due to differences between the software used to develop the document and the software into which document may be downloaded, changes in format, page length, etc. may occur.

Table of Contents

I. Background and Statutory Authority
A. Background to Nonconformance Penalty Rules
B. Statutory Authority
C. Heavy-duty Diesel Consent Decrees
II. Nonconformance Penalties for 2004 and Later Heavy-Duty Engines and Heavy-Duty Vehicles
A. NCP Eligibility: Emission Standards for Which NCPs are Proposed
1. Heavy-Duty Diesel NMHC+NO_X Standard
B. NCP Eligibility: Emission Standards for Which NCPs are Not Proposed
1. Heavy-Duty Gasoline Standards
2. 2004 Tier 2 Medium-duty Passenger Vehicles & Heavy Light-duty Trucks
III. Penalty Rates
A. Parameters
1. Upper Limit
2. Parameter Values
3. Penalty Curves

B. Issues and Alternatives
1. Adjustment to Reflect Differences in Performance (other than fuel economy)
2. Projected Fuel Price
3. Discount Rates
IV. Economic Impact
V. Environmental Impact
VI. Public Participation
A. How Do I Submit Comments?
B. Will There Be a Public Hearing?
VII. Administrative Requirements
A. Regulatory Planning and Review: Executive Order 12866
B. Regulatory Flexibility Act, as amended by the Small Business Regulatory Enforcement Fairness Act of 1996 (SBREFA), 5 USC 601 et. seq.
C. Paperwork Reduction Act
D. Unfunded Mandates Reform Act
E. Executive Order 13175: Consultation and Coordination with Indian Tribal Governments
F. National Technology Transfer and Advancement Act
G. Executive Order 13045: Children's Health Protection
H. Executive Order 13132: Federalism
I. Executive Order 13211: Energy Effects
J. Plain Language

I. Background and Statutory Authority

A. Background to Nonconformance Penalty Rules

Since the promulgation of the first NCP rule in 1985, NCP rules have generally been described as continuing ''phases'' of the NCP program. The first NCP rule (Phase I), sometimes referred to as the ''generic'' NCP rule, established three basic criteria for determining the eligibility of emission standards for nonconformance penalties in any given model year (50 FR 35374, August 30, 1985). For regulatory language, *see* 40 CFR 86.1103–87. First, the emission standard in question must become more difficult to meet. This can occur in two ways, either by the emission standard itself becoming more stringent, or due to its interaction with another emission standard that has become more stringent. Second, substantial work must be required in order to meet the emission standard. EPA considers ''substantial work'' to mean the application of technology not previously used in that vehicle or engine class/subclass, or a significant modification of existing technology, in order to bring that vehicle/engine into compliance. EPA does not consider minor modifications or calibration changes to be classified as substantial work. Third, a technological laggard must be likely to develop. Prior NCP rules have considered a technological laggard to be a manufacturer who cannot meet a particular emission standard due to technological (not economic) difficulties and who, in the absence of NCPs, might be forced from the marketplace. EPA will make the determination that a technological laggard is likely to develop, based in large part on the above two criteria. However, these criteria are not always sufficient to determine the likelihood of the development of a technological laggard. An emission standard may become more difficult to meet and substantial work may be required for compliance, but if that work merely involves transfer of well-developed technology from another vehicle class, it is unlikely that a technological laggard would develop.

The criteria and methodologies established in the 1985 rule have since been used to determine eligibility and to establish NCPs for a number of heavy-duty emission standards. Phases II, III, IV, and V, published in the period from 1985 to 1996, established NCPs that, in combination, cover the full range of heavy-duty—from heavy light-duty trucks (6,000–8,500 pounds gross vehicle weight) to the largest diesel truck and urban bus engines. NCPs have been established for hydrocarbons (HC), carbon monoxide (CO), nitrogen oxides (NO_X), and particulate matter (PM). The most recent NCP rule (61 FR 6949, February 23, 1996) established NCPs for the 1998 and later model year NO_X standard for heavy-duty diesel engines (HDDEs), the 1996 and later model year for Light-Duty Truck 3 (LDT3) NO_X standard, and the 1996 and later urban bus PM standard. A concurrent but separate final rule (61 FR 6944, February 23, 1996) established NCPs for the 1996 LDT3 PM standard. The NCP rulemaking phases are summarized in greater detail in the Draft Technical Support Document for this proposal.

B. Statutory Authority

Section 206(g) of the Clean Air Act (the Act), 42 U.S.C. 7525(g), requires EPA to issue a certificate of conformity for HDEs or HDVs which exceed a federal emissions standard, but do not exceed an upper limit associated with that standard, if the manufacturer pays an NCP established by rulemaking. Congress adopted section 206(g) in the Clean Air Act Amendments of 1977 as a response to perceived problems with technology-forcing heavy-duty emissions standards. Following *International Harvester* v. *Ruckelshaus*, 478 F.2d 615 (D.C. Cir. 1973), Congress realized the dilemma that technology-forcing standards were likely to cause. If strict standards were maintained, then some manufacturers, ''technological laggards,'' might be unable to comply initially and would be forced out of the marketplace. NCPs were intended to remedy this potential problem. The laggards would have a temporary alternative that would permit them to sell their engines or vehicles by payment of a penalty. At the same time, conforming manufacturers would not suffer an economic disadvantage compared to nonconforming manufacturers, because the NCP would be based, in part, on money saved by the technological laggard and its customer from the nonconforming engine or vehicle.

Under section 206(g)(1), NCPs may be offered for HDVs or HDEs. The penalty may vary by pollutant and by class or category of vehicle or engine. HDVs are defined in section 202(b)(3)(C) of the CAA as vehicles in excess of 6,000 pounds gross vehicle weight rating (GVWR). The light-duty truck (LDT) classification includes trucks that have a GVWR of 8500 lbs or less. Therefore, certain LDTs may be classified as HDVs. Historically, LDTs up through 6000 lbs GVWR have been considered ''light light-duty trucks'' (LLDTs) and LDTs between 6,001 and 8,500 pounds GVWR have been considered ''heavy light-duty trucks'' (HLDTs). Based on various new requirements established by the Clean Air Act Amendments of 1990, each of these two light truck categories has been further subdivided into groups by weight. The LLDTs are classified by weight based on ''loaded vehicle weight,'' or LVW, which maintains its current definition: curb weight plus 300 lbs. The trucks up through 3750 lbs LVW make up a subclass called light-duty-trucks-1, or LDT1. Those greater than 3750 lbs LVW but less than or equal to 6000 lbs GVWR are the subclass light-duty-trucks-2, or LDT2. The HLDTs are divided at 5750 lbs ''adjusted loaded vehicle weight,'' or ALVW. Adjusted loaded vehicle weight is the average of the curb weight and the GVWR. The HLDTs that are up through 5750 lbs ALVW are called light-duty trucks-3, or LDT3. Those above 5750 lbs ALVW but less than or equal to 8500 lbs GVWR are light-duty-trucks-4, or LDT4. The LDT3 and LDT4 subclasses make up the HLDT vehicle class. Since NCPs can only be established for heavy duty vehicles or engines, emission standards for light-duty trucks of the LDT3 and LDT4 categories are the only light-duty truck categories eligible for NCPs.

Section 206(g)(3) requires that NCPs:

- Account for the degree of emission nonconformity;
- Increase periodically to provide incentive for nonconforming manufacturers to achieve the emission standards; and
- Remove the competitive disadvantage to conforming manufacturers.

Section 206(g) authorizes EPA to require testing of production vehicles or engines in order to determine the emission level on which the penalty is based. If the emission level of a vehicle or engine exceeds an upper limit of nonconformity established by EPA through regulation, the vehicle or engine would not qualify for an NCP under section 206(g) and no certificate of conformity could be issued to the manufacturer. If the emission level is below the upper limit but above the standard, that emission level becomes the ''compliance level,'' which is also the benchmark for warranty and recall liability; the manufacturer who elects to pay the NCP is liable for vehicles or engines that exceed the compliance level in-use, unless, for the case of HLDTs, the compliance level is below the in-use standard. The manufacturer does not have in-use warranty or recall liability for emissions levels above the standard but below the compliance level.

C. Heavy-duty Diesel Consent Decrees

On October 22, 1998, the Department of Justice and the Environmental Protection Agency announced settlements with seven major manufacturers of diesel engines that represent a majority of the diesel engine market. The settlements resolved claims that they installed computer software on heavy duty diesel engines that turned off the engine emission control system during highway driving in violation of the CAA's prohibition on defeat devices (42 USC 7522(a)(3)). The settlements were entered by the Court on July 1, 1999. These consent decrees with the Federal Government contained a number of provisions applying to heavy-duty on-road, and in some cases, nonroad, engines. Specific to the engines that would be addressed by the proposed 2004 NCPs, the decrees permit the continued use of non-complying engines for a period of time (although emissions are capped by limits associated with new supplemental test procedures). Other elements of these consent decrees include a program under which the consent decree manufacturers are required to invest considerable resources to evaluate instrumentation and methodologies for on-road testing. Because the Consent Decrees refer to NCPs for the 2004 model year, if published, promulgation of this rule would have an impact on the penalties determined under the Consent Decrees.

II. Nonconformance Penalties for 2004 and Later Heavy-Duty Engines and Heavy-Duty Vehicles

A. NCP Eligibility: Emission Standards for Which NCPs are Proposed

1. Heavy-Duty Diesel NMHC+NO_X Standard

As discussed in section III.A., EPA must determine that three criteria are met in order to determine an NCP should be established in any given model year. For the model year 2004 heavy-duty diesel NMHC+NO_X standard, we believe these criteria have been met and it is therefore appropriate to establish NCPs for the 2004 model year NMHC+NO_X standard.

The first criteria requires that the emission standard in question must become more difficult to meet. This is the case with the 2004 NMHC+NO_X standard. The previous emission standards for this category are 4.0 g/bhp-hr NO_X and 1.3 g/bhp-hr HC. The 2004 standards is a combined NMHC+NO_X standard of 2.4 g/bhp-hr, or optionally a 2.5 g/bhp-hr NMHC+NO_X with a limit of 0.5 g/bhp-hr NMHC.[1] When promulgated, the Agency concluded that the 2004 standard was a technology forcing standard, and therefore it is logical to conclude the standard is more difficult to meet.

The second criteria which must be met in order for EPA to determine that an NCP should be established is substantial work must be required to meet the emission standard. This criteria has also been met. As discussed in both the 1997 final rule (See 62 FR 54694, October 21, 1997) which established the 2004 standards, as well as the 2000 final rule (See 65 FR 59896, October 6, 2000) which reaffirmed those standards, EPA projected that new emission control technologies would be needed to achieve the 2004 standards. In these previous rulemakings EPA pointed to technologies such as cooled exhaust gas recirculation (EGR) and variable geometry turbochargers (VGT) as some of the technologies manufacturers could use to meet the 2004 standards. Such technologies have not previously been used in the on-highway heavy-duty diesel market, and EPA estimated substantial research and development efforts by the engine manufacturers would be undertaken to meet the 2004 standards. We continue to believe such new technologies will be used by a number of engine manufacturers, and in fact several manufacturers have indicated in recent statements they will use new emission control technologies in order to achieve the 2004 standards.[2]

The final criteria for EPA to determine that an NCP should be established is that a technological laggard is likely to develop. EPA has several reasons to believe a technological laggard is likely. First, during our recent discussions with a number of engine manufacturers, several manufacturers have indicated they may not be able to make the necessary technological changes to meet the 2004 emission standards for some of their high horsepower ratings by model year 2004. Manufacturers have indicated that while they are continuing to develop cooled EGR systems and associated technologies (such as advanced turbocharger technologies) and have reached no definitive conclusion, they are concerned regarding their ability to comply in 2004 with these higher horsepower engines. Engines with higher horsepower ratings typically operate at higher boost levels (higher intake manifold pressures), as well as higher fueling rates. This is the case on today's engines. With the addition of cooled EGR, boost levels must be increased even further in order to accommodate EGR while maintaining the same power ratings. This can push both peak cylinder pressures and turbocharger designs to their physical limitations. While manufacturers are exploring a number of technologies to extend the current limitations, they are concerned with their ability to do so with all of the currently available power ratings between now and 2004.

Second, during recent discussions with engine manufacturers, one manufacturer has indicated that some low volume engine families currently available may not be ready by 2004. A low volume engine family may require specific and targeted research and development efforts in order to comply with the 2004 standards, and it is reasonable to expect that manufacturers may focus their efforts on these low volume products later in the development process, and time may be too short to bring the product into compliance for the 2004 model year.

Finally, in the final rule completed in 2000 which reaffirmed the 2004 NMHC+NO_X standard, three engine manufactures as well as the Engine Manufacturers Association (EMA),

[1] NMHC stands for non-methane hydrocarbons, which is a measure of total hydrocarbons with the methane emissions subtracted out. For typical on-highway diesel fueled heavy-duty engines, methane emissions are on the order of 10 percent of the total hydrocarbon emissions.

[2] See press releases from Caterpillar Inc., Cummins, Detroit Diesel Corp. and Mack, available in EPA Air Docket A–2001–30.

commented that EPA should establish NCPs for the 2004 standards.[3] EMA commented the standards ''will be technology-forcing and likely will result in the inability of some engine manufacturers and/or engine families to comply with the standards.'' Detroit Diesel Corp. commented ''Meeting the 2004 standards will require the use of sophisticated new emission control technology and will require emission durability evaluation over a greatly extended useful life period. * * * Any development setbacks or misjudgement regarding the capability or durability of the new emission control technology could, at the last minute, put an engine manufacturer into a laggard position and prevent certification of an engine family. The likelihood of a technological laggard for 2004 is at least as great and probably much greater than for other standards for which NCPs have been provided.'' When we finalized the reaffirmation of the 2004 NO_X+NMHC standard in 2000 we agreed that the standards were technology-forcing and that sophisticated technologies would be required, and thus, that the first two eligibility criteria were likely met. However, we concluded at the time that it was too early to determine the likelihood of a technological laggard, and further, that it was not necessary to attempt to make such a judgement at that time. Now we are a year closer to implementation of the 2004 standards, and manufacturers have not revoked their claims that the likelihood of a technological laggard is high. The fact that several engine manufacturers as well as a major trade organization have indicated they believe a technological laggard is likely to develop is an important indicator for the Agency regarding the technological laggard criteria.

Based on this information, the Agency believes it is reasonable to conclude that a technological laggard is likely to develop for the 2004 NMHC+NO_X standards.

B. NCP Eligibility: Emission Standards for Which NCPs are Not Proposed

1. Heavy-Duty Gasoline Standards

In a final rule published on October 6, 2000 (65 FR 59896), EPA established more stringent emission standards for all heavy-duty gasoline (or ''Otto-cycle'') vehicles and engines. These standards took two forms: A chassis-based set for complete vehicles under 14,000 pounds GVWR (the chassis-based program), and an engine-based set for all other Otto-cycle heavy-duty engines (the engine-based program). Each of the two programs has an associated averaging, banking, and trading (ABT) program. The new standards generally take effect starting with the 2005 model year, but manufacturers are provided with two additional options for early compliance, each of which provides additional flexibility relative to the 2005 model year compliance option.

We have considered the potential need for NCPs to be provided for the new standards applicable to Otto-cycle heavy-duty engines and vehicles, and have concluded at this time that NCPs are not required for any of these standards. We recognize that in general these new standards represent an increase in stringency over the prior federal standards, and thus, that the first criterion for NCP eligibility is satisfied. While some additional work is likely required to meet these new standards, the second and third eligibility criteria are not satisfied.

With respect to the chassis-based standards, manufacturers will largely be using vehicles already certified to California standards to meet the federal requirements. The new federal chassis-based standards effectively extend the current California medium-duty vehicle standards to a nationwide basis. California began requiring some vehicles to meet these standards in 1998, and the phase-in reached completion in the 2001 model year. Thus, manufacturers will be producing a fleet of vehicles for California that meets the new federal chassis-based requirements several years prior to having to introduce the vehicles on a nationwide basis. The technology required to meet the new federal standards has therefore already been successfully demonstrated on this class of vehicles, and manufacturers have up to several additional years to further develop and improve these systems prior to introducing them nationwide. Therefore, for vehicles required to meet the chassis-based standards, we do not believe that substantial work, as described above, will be necessary to meet the new standards. For similar reasons, as well as the fact that manufacturers have not raised the possibility of requiring NCPs, we do not believe that a technological laggard is likely to develop for this class of vehicles.

Vehicles meeting the new engine-based standards will generally be employing more advanced versions of technologies that are currently in use, such as advanced catalytic converters and closed loop electronic control of the air-fuel ratio. All heavy-duty Otto-cycle engines are already equipped with three-way catalysts, and some recently introduced engines featuring precise air/fuel control and superior catalyst designs have been certified at levels below the most stringent standards included under the three optional compliance programs. In fact, the level of the engine-based standard under the optional programs that manufacturers are likely to select (1.5 grams per brake-horsepower-hour) is consistent with the recommendations of two manufacturers providing comment on the rule. Given these factors, we do not believe that a technological laggard is likely to emerge. Thus, for vehicles required to meet the engine-based standards, we do not believe that substantial work, as described above, will be necessary to meet the new standards.

In addition, the three compliance options that we included in the rule were developed through discussions with manufacturers, and based on those discussions we believe that these options are viable options that provide a range of choices and offer manufacturers flexibility to fit the program with their product planning. Due to the availability of these options and the discussions with manufacturers, we do not believe that a technological laggard is likely to develop with respect to any of the new Otto-cycle heavy-duty vehicle or engine standards. The ABT programs also offer considerable additional flexibility to meet the new standards.

In conclusion, based on the factors described above, we do not believe that there is sufficient evidence at this time that either substantial work is required to meet the new standards or that a technological laggard is likely to develop. Therefore, we are not proposing NCPs for any of the Otto-cycle heavy-duty emission standards.

2. 2004 Tier 2 Medium-duty Passenger Vehicles & Heavy Light-duty Trucks

In December 1999, EPA promulgated a new set of emission control requirements for heavy-duty vehicles with a GVWR between 6,001 and 10,000 lbs. (See 65 FR 6698, February 10, 2000). These requirements were implemented as part of EPA's Tier 2 vehicle emission control program. Beginning in 2004, heavy light-duty trucks (HLDTs) and medium-duty passenger vehicles (MDPVs) are combined in an averaging set which must meet a fleet average NO_X emission standard of 0.20 g/mi. The program phases in at 25/50/75/100% of each years sales over the period 2004–2007. Those not included in this fleet average

[3] See EPA Air Docket A–98–32, comments from Navistar (item IV–D–29), Mack Truck (IV–D–06), Detroit Diesel Corp. (IV–D–28), and EMA (IV–D–05).

must meet the current standards. This is referred to as the interim program. Beginning in 2008, the fleet must average 50% at 0.20 g/mi NO_X and the remaining 50% at 0.07 g/mi NO_X on average. And, by 2009 the fleet must average 0.07 g./mi NO_X. This is referred to as the Tier 2 program. This fleet average includes all covered vehicles without regard to fuel-type or combustion cycle. To be considered as part of the average, vehicle families must certify to NO_X, NMOG, CO, HCHO, and PM standards in one of a number of the emission ''bins.'' There are 11 bins available for the interim program and eight for the Tier 2 program. In order for a family to qualify for the program it need only be able to certify in the top bin of each program.

EPA believes that NCPs are not necessary for either the interim or Tier 2 programs applicable to HLDTs and MDPVs. While the standard will be more difficult to meet, it does not involve ''substantial work'' as defined in the regulation and discussed above, nor does EPA expect there to be a ''technological laggard.'' The technology needed to meet these standards is well understood now, and, as discussed in the rulemaking, there are already a number of vehicle families capable of meeting the requirements. To enable this technology further, EPA has promulgated fuel quality requirements for gasoline and diesel fuel aimed at substantially reducing sulfur content and thus enabling highly efficient aftertreatment technology.

Beyond that, these programs are constructed with a phase-in, which means that there is ample opportunity for technological development with the potentially more difficult vehicle configurations deferrable until the final year of each program's phase-in. Furthermore, the programs are based on fleet average standards independent of fuel or combustion cycle and do not limit emission standards to the fleet average. In order to be certified, a vehicle family need only qualify in one of the emission bins. For the interim and Tier 2 programs there are three bins above the average. Generally, the top bin in the interim program was constructed such that current technology vehicles could qualify. The top bin of the Tier 2 program was set at the fleet average value of the interim program.

The program also includes a number of flexibilities designed to enhance compliance. These include a provision to allow the generation of credits through early banking, manufacturer-developed alternative phase-in schedules, deficit carryforward for the fleet average, and a number of technology phase-in flexibilities such as in-use standards and alternative certification test-cycles.

In conclusion, given the significant flexibilities and options contained in the Tier 2 rule, we are not proposing NCPs for 2004 and later model year HLDTs or MDPVs.

III. Penalty Rates

This proposed rule is the most recent in a series of NCP rulemakings. The discussion of penalty rates in the Phase IV rulemaking (58 FR 68532, December 28, 1993), Phase III rulemaking (55 FR 46622, November 5, 1990), the Phase II rulemaking (50 FR 53454, December 31, 1985) as well as the Phase I rulemaking (50 FR 35374, August 30, 1985) are incorporated by reference. This section briefly reviews the penalty rate formula and discusses how EPA arrived at the penalty rates in this proposed rule.

A. Parameters

As in the previous NCP rules, we are specifying the NCP formula for each standard using the following parameters: COC_{50}, COC_{90}, MC_{50}, F, and UL. The NCP formula is the same as that promulgated in the Phase I rule. As was done in previous NCP rules, costs include additional manufacturer costs and additional owner costs, but do not include certification costs because both complying and noncomplying manufacturers must incur certification costs. COC_{50} is an estimate of the industry-wide average incremental cost per engine (references to engines are intended to include vehicles as well) associated with meeting the standard for which an NCP is offered, compared with meeting the upper limit. More precisely, the values of COC_{50} presented here are estimates of the sales weighted mean incremental cost. We request comment regarding whether it would be more appropriate to set COC_{50} equal to the 50th percentile costs of compliance (i.e., median) instead of the mean costs. Commenters supporting the use of the median costs should address whether such an approach would reveal confidential business information.

COC_{90} is EPA's best estimate of the 90th percentile incremental cost per-engine associated with meeting the standard for which an NCP is offered, compared with meeting the associated upper limit. MC_{50} is an estimate of the industry-wide average marginal cost of compliance per unit of reduced pollutant associated with the least cost effective emission control technology installed to meet the new standard. MC_{50} is measured in dollars per g/bhp-hr for HDEs. F is a factor used to derive MC_{90}, the 90th percentile marginal cost of compliance with the NCP standard for engines in the NCP category. MC_{90} defines the slope of the penalty rate curve near the standard and is equal to MC_{50} multiplied by F. UL is the upper limit above which no engine may be certified. UL is specified for each of the four service classes for which NCPs are being proposed.

The derivation of the proposed cost parameters is described in a support document entitled ''Draft Technical Support Document: Nonconformance Penalties for 2004 Highway Heavy-Duty Diesel Engines,'' which is available in the public docket for this rulemaking. All costs are presented in 2001 dollars. Because we are trying to account for cost differences at the point of sale, all costs were converted to net present value (NPV) for calendar year 2004 using a discount rate of 7.0 percent. The upper limits applicable to a pollutant emission standard are described in the following section.

We requested cost information from several of the engine manufacturers for each engine model that they plan to produce for model year 2004. We used these estimates along with all other available information to estimate the average and 90th percentile compliance costs. However, as we have in previous NCP rules, we relied heavily on the manufacturers' projections of their own costs, especially for fixed, hardware, and warranty costs. We request comment on the availability of other data to estimate these costs on a manufacturer-specific basis.

It is important to note that this analysis differs from the analyses for the model year 2004 standard-setting rulemakings in three basic ways:

(1) The goal of this analysis is to estimate manufacturer and operator costs during the first year of the new standards rather than to project the long-term costs.

(2) The baselines for calculation of compliance costs differ significantly due to issues associated with the Consent Decrees.

(3) We now have more detailed information about costs identified in the earlier analysis, as well as cost categories not previously included.

Thus, the costs estimated here are not comparable to the estimates described in the standard-setting rulemakings. These differences are discussed in detail in Chapter 3 of the Draft Technical Support Document for this rulemaking, and only a summary will be presented here.

First, it is necessary for this NCP analysis to focus solely on the compliance costs associated with the first year of production, while standard-

setting analyses require a longer term view. This is most significant with respect to the costs associated with hardware, reliability (warranty, repairs, and associated costs), and fuel consumption. Manufacturers often make significant progress in reducing these costs with additional time.

Second, as is discussed in Section III(A)(1) of this preamble, the engine designs currently produced and sold under the Consent Decrees lead us to propose an Upper Limit value of 6.0 g/bhp-hr NMHC+NO_X, for the heavy-heavy duty service class, which fundamentally changes the cost analysis. The penalty rate factors are based on the compliance costs associated with lowering the emissions from model year 2001 engines to the 2004 standard. For heavy-heavy duty engines the NCPs are therefore based on the compliance costs associated with lowering the emissions from 6.0 g/bhp-hr NMHC+NO_X to the 2004 standard of 2.5g/bhp-hr NMHC+NO_X. This analysis was not performed in the standards-setting rules, and therefore the costs estimates in the standard-setting rule and this NCP proposal are not comparable. For the standard-setting rules, we estimated the compliance costs associated with bringing an engine which meets the current NO_X standard of 4.0 g/bhp-hr into compliance with the 2.5g/bhp-hr NMHC+NO_X. Even for the other service classes, where we have proposed an Upper Limit based directly on the 4.0 g/bhp-hr NO_X standard, the impact on engine designs of the alleged defeat device strategies used by a number of engine manufacturers over the past decade makes comparison between the standard-setting rule cost analysis and this analysis difficult.

Finally, for this NCP proposal we have received new information since the standard-setting FRMs. This included more detailed estimates of actual manufacturer costs, plus data on a few additional cost items which were not part of the standards-setting rulemaking analysis. Specifically, we have included new cost items for vehicle manufacturer costs, post-warranty repairs, and revenue impacts (lost revenue due to the increased weight of the engine and the loss in freight capacity). We did not have this information during the standard-setting rule. As a result of the three factors summarized above, the costs estimated in this NCP proposal are not directly comparable to the estimates described in the standard-setting rulemakings.

The significance of the various cost categories varied with service class. For example, the largest costs for light-heavy duty were hardware costs, while fuel costs were relatively low. However, for heavy-heavy duty, the fuel costs represent about half of the total cost of compliance.

1. Upper Limit

The upper limit is the emission level established by regulation above which NCPs are not available and a heavy duty engine cannot be certified or introduced into commerce. CAA section 206(g)(2) refers to the upper limit as a percentage above the emission standard, set by regulation, that corresponds to an emission level EPA determines to be ''practicable.'' The upper limit is an important aspect of the NCP regulations not only because it establishes an emission level above which no engine can be certified, but it is also a critical component of the cost analysis used to develop the NCP factors. The regulations specify that the relevant NCP costs for determining the COC_{50} and the COC_{90} factors are the difference between an engine at the upper limit and one that meets the new standards (*see* 40 CFR 86.1113–87).

The regulatory approach adopted under the NCP rules sets the Upper Limit (UL) at the prior emission standard when a prior emission standard exists and that standard is changed and becomes more stringent. EPA concluded that the UL should be reasonably achievable by all manufacturers with vehicles in the relevant class. It should be within reach of all manufacturers of HDEs or HDVs that are currently allowed so that they can, if they choose, pay NCPs and continue to sell their engines and vehicles while finishing their development of complying engines. A manufacturer of a previously certified engine or vehicle should not be forced to immediately remove an HDE or HDV from the market when an emission standard becomes more stringent. The prior emissions standard meets these goals, because manufacturers have already certified their vehicles to that standard.

EPA also concluded that the prior emission standard is the appropriate upper limit when an emission standard is tightened by operation of another standard. EPA recognized that the previous standard would not necessarily represent the level that is reasonably achievable by all manufacturers with engines in the relevant class, but in practice the prior standard should be achievable in almost all cases. EPA rejected a suggestion that the upper limit, in such cases, should be more stringent than the prior emission standard, because it would be very difficult to identify a limit that would be within reach of, and could be met by, all manufacturers.

In this case, the new standard is a limit on the combination of NO_X+NMHC, while the prior regulatory standards are separate limits, one for NO_X and one for total HC. For a large portion of the industry, there are also emissions limits set under judicial Consent Decrees, many of which vary from the regulatory standards, in particular for the heavy-heavy service class as discussed latter in this section. In this situation, there is no simple way to determine the appropriate prior emission standard to use as an Upper Limit. One option would be to add the current NO_X and HC standards together, resulting in a 5.3 NO_X+NMHC standard. Another option would recognize that the HC standard has resulted in emissions of NMHC that are generally at 0.5 or below, producing NO_X+NMHC levels consistent with a standard of 4.5 for engines meeting a 4.0 g/bhp-hr NO_X standard. If there were no Consent Decree emissions limits, and the entire industry was already operating at these levels, a 4.5 standard would be more consistent with the policy and purposes of 40 CFR 86.1104–91, the general regulatory provision addressing Upper Limits. A NO_X+NMHC standard of 5.3 would in effect allow for increases in NO_X above the current regulatory emissions standards, because there is no reason to expect NMHC levels would increase above 0.5. The UL is designed to allow continued production of current engines, but not to allow backsliding.

EPA also considered the CD emissions limits in this analysis, as they establish legally binding requirements on the manufacturers that directly affect the way engine manufacturers design their engines. In many cases it is the CD limits, and not the regulatory standards, that are the controlling factor and dictate the level of emissions control required on engines produced during the term of the Decrees. Since the role of an NCP is to address the real world problems associated with a transition from a prior emissions requirement to a new more stringent requirement, it is appropriate to take the CD requirements into account where the levels required under the CD are in fact the controlling factor in establishing the prior level of control.

For light heavy-duty, medium heavy-duty, and urban bus engines, the CD requirements are consistent with the regulatory requirements for FTP standards and the defeat device prohibition. Manufacturers are currently certifying to the emissions levels provided under the CD. An examination

of model year 2001 certification data shows that for both CD and non-CD engine manufacturers, engines are generally being certified with HC emissions below 0.3 g/bhp-hr, and no engines in these service classes certified to the 4.0 g/bhp-hr NO_X standard have a combined NO_X plus HC emission level greater than 4.5 g/bhp-hr.[4] Hence, an UL of 4.5 NO_X+NMHC on the FTP would be most consistent with the policy approach embodied in 40 CFR 86.1104–91.

For heavy heavy-duty engines, however, the CD provides a significantly different approach. For these engines, limits are set for Euro III and NTE levels that allow for significantly higher emissions off the FTP than EPA would expect to allow under the defeat device prohibition. While the FTP standard under the CD is the same as in the regulations, it is the level of off-cycle control that drives the design requirements for the engine manufacturers. They are the legal requirements that drive the level of control embodied in the engine design. Model year 2001 certification data shows that combined HC and NO_X emissions for these engines are at or below 6.0 g/bhp-hr when measured using the Euro III test.[5]

This NCP rulemaking focuses on technological laggards, which would be those heavy-duty engines that need more lead time to comply with the 2004 NO_X+NMHC standard. For heavy heavy-duty engines, the prior actual level of control that they are now achieving and certifying to is driven by the CD levels. As such, an UL at the level of control required under the CD would set a level that is within the reach of all such manufacturers, including the technological laggards. It would be reasonably achievable by all manufacturers in this class, and would avoid forcing the technical laggards to remove an engine from the market when the 2004 emissions standards go into effect. This UL would be consistent with the policy embodied in the NCP regulations.

EPA recognizes that under the CD this group of heavy-duty engines is also required to achieve the 2004 emissions levels by October 2002. However, as discussed before, EPA has determined that there is likely to be a technological laggard for purposes of meeting this standard in 2004. The prior deadline in the CD does not change this determination, and means only that such manufacturers would also be subject to the constraints in the CD, including its compliance and enforcement provisions. EPA also recognizes that the CD calls for compliance with a 4.0 NO_X standard on the FTP with a 6.0 NO_X standard for the Euro III, and the UL we are proposing is for the FTP. Setting the UL at 6.0 NO_X+NMHC for the FTP would be expected to allow continued production of engines with NO_X at their CD levels, as the Euro III levels would not be expected to raise serious concerns about compliance with the defeat device prohibition.

EPA also considered an UL or 4.5 or 5.3 for the heavy heavy-duty engines An UL of 4.5 NO_X +NMHC would significantly reduce the level of off-cycle emissions for these engines, but would do it by requiring significant design changes at the same time design work is underway to meet the 2.5 standard. It is questionable whether there is adequate lead time to accomplish this in time for 2004 model year, and it is not consistent with the policy underlying the NCP regulation concerning ULs. In addition, the majority of the heavy-heavy cost numbers obtained by EPA from industry involved bringing an engine to compliance from the CD levels to the 2004 levels, and not for reducing from some third level to the 2004 levels. EPA does not believe it could readily develop the cost figures for such a development phase. An UL of 5.3 NO_X+NMHC would involve a hybrid of these two options—it would involve some change from the CD levels, but less of a change than going to the 4.5 level.

Of the three possible ULs for heavy heavy-duty engines, EPA believes that 6.0 NO_X+NMHC is most consistent with the policy approach embodied in 40 CFR 86.1104–91. The cost calculation in this proposal are based on this as the UL. However, EPA invites comment on using an UL of either 5.3 or 4.5 NO_X+NMHC, including information on the technology such an engine would use to comply with either 5.3 or 4.5, as well as the costs associated with these options.

2. Parameter Values

We propose that the values in Table 1 (in 2001 dollars) be used in the NCP formula for the 2004 and later model year NMHC+NO_X standard of 2.5 g/bhp-hr for diesel heavy-duty engines and diesel urban bus engines at full useful life. The derivation of these parameters is described in the Draft Technical Support Document for this rulemaking. We request comment on our estimates of these parameters.

[4] EPA Memorandum ''Summary of Model Year 2001 Heavy-duty Diesel Engine HC and NO_X Certification Data'', copy available in the docket for this rulemaking.

[5] EPA Memorandum ''Summary of Model Year 2001 Heavy-duty Diesel Engine HC and NO_X Certification Data'', copy available in the docket for this rulemaking.

TABLE 1.—PROPOSED NCP CALCULATION PARAMETERS

Parameter	Light heavy-duty diesel engines	Medium heavy-duty diesel engines	Heavy-duty diesel engines	Urban bus engines
COC_{50}	$1,080	$3,360	$8,940	$4,400.
COC_{90}	$2,610	$6,870	$14,790	$7,120.
MC_{50}	[1] $2,000	[1] $1,800	[1] $7,200	[1] $4,900
F	1.3	1.3	1.3	1.3
UL	[1] 4.5	[1] 4.5	[1] 6.0	[1] 4.5

[1] Per gram per brake-horsepower-hour.

3. Penalty Curves

The calculation parameters listed in Table 1 are used to calculate the penalty rates for each heavy-duty service class. These parameters are used in the penalty rate formulas which are defined in the existing NCP regulations (See 40 CFR 86.1113(a)(1) and (2)). Using the parameters in Table 1, and the equations in the regulations, we have plotted penalty rates versus compliance levels for each service class in Figures 1–4 below. These penalty curves are for the first year of use of the NCPs, that is, the annual adjustment factors specified in the regulations have been set equal to one.

BILLING CODE 6560–50–P

Figure 1: Light-heavy Penalty Curve

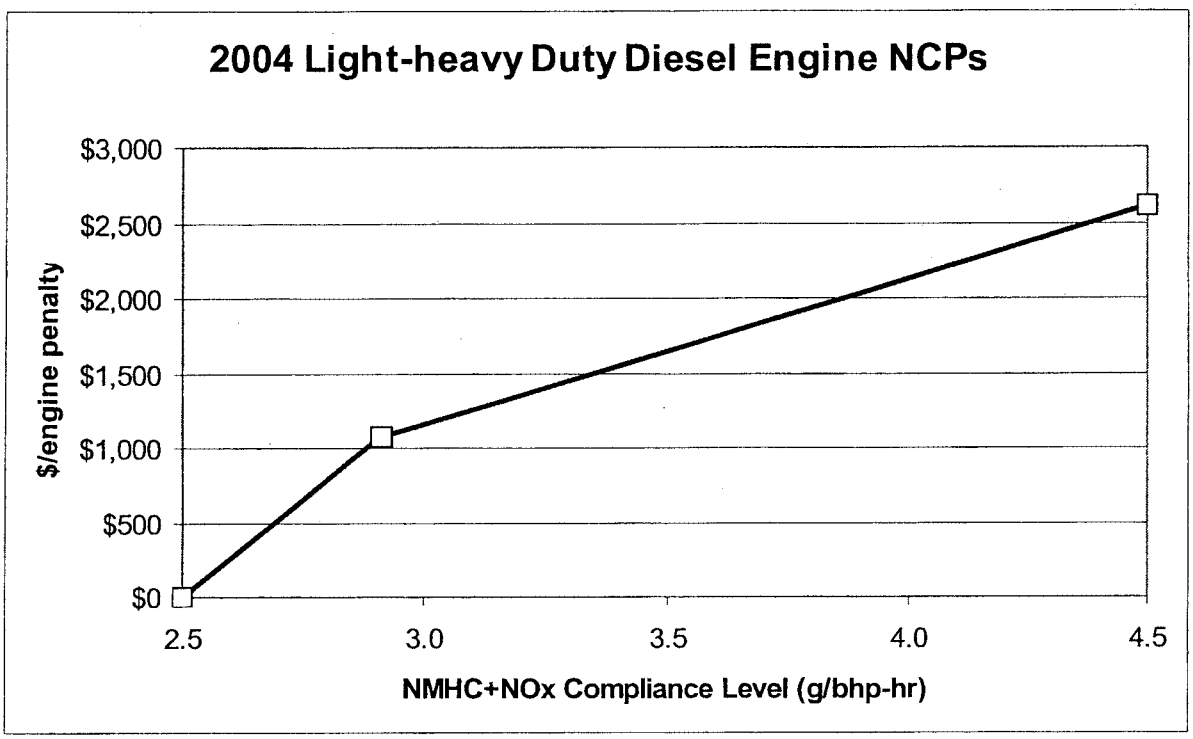

Figure 2: Medium-heavy Penalty Curve

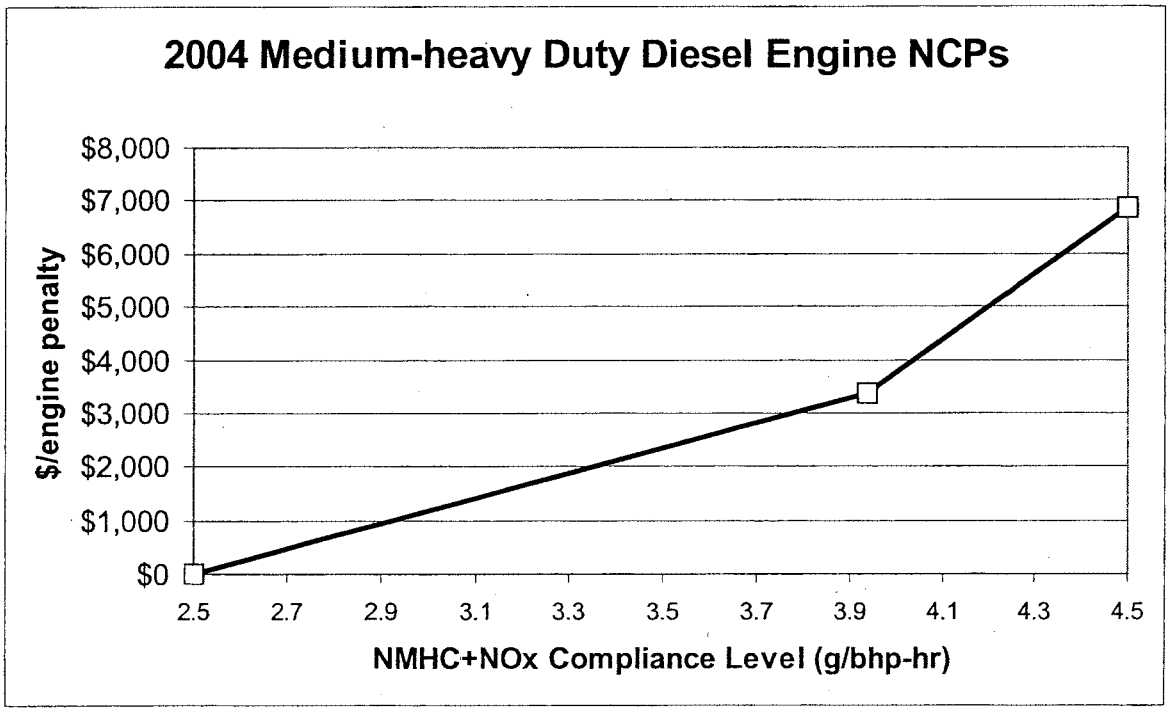

Figure 3: Heavy-heavy Penalty Curve

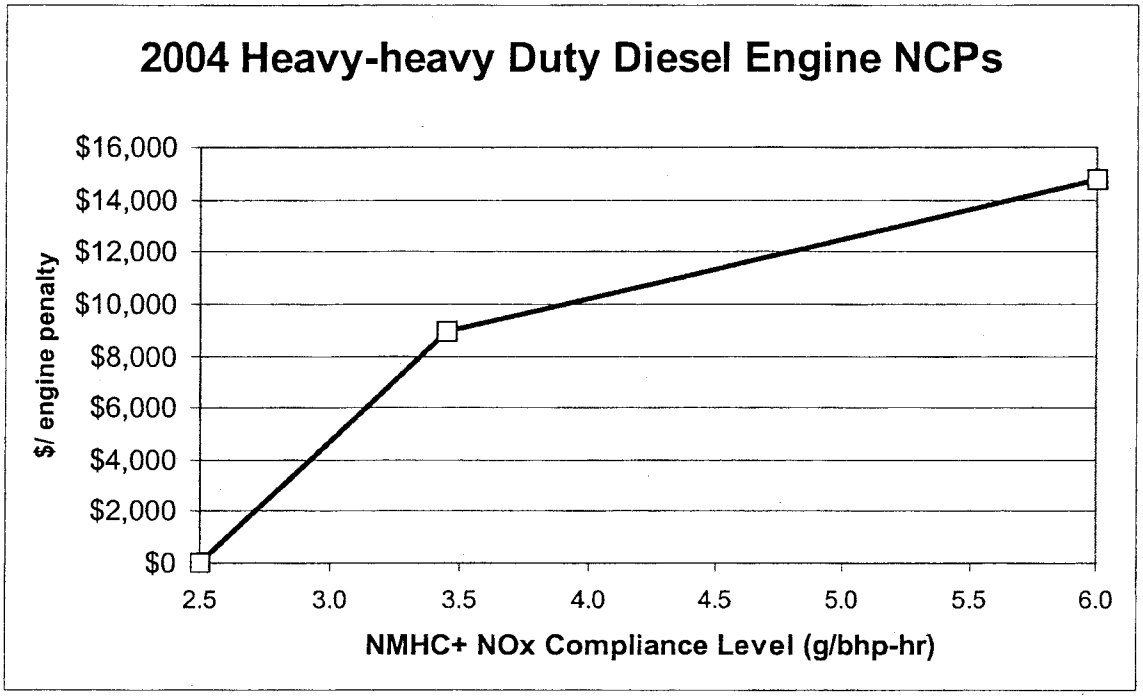

Figure 4: Urban Bus Penalty Curve

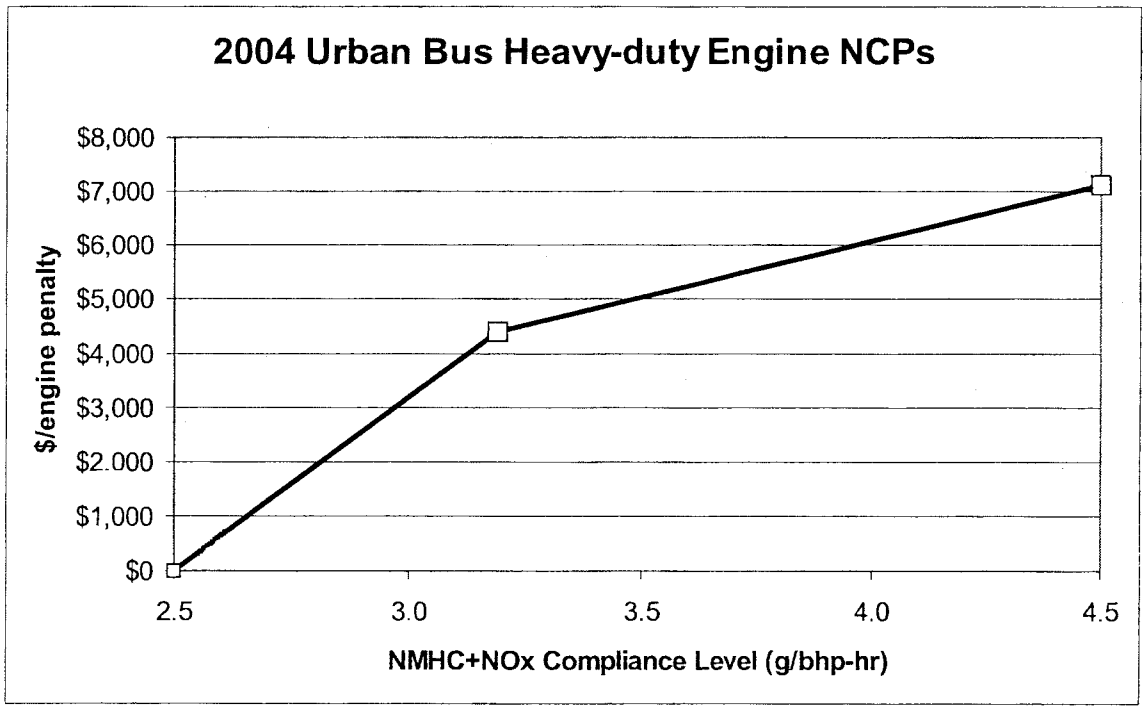

BILLING CODE 6560–50–C

B. Issues and Alternatives

The Clean Air Act requires EPA to set the NCPs ''to remove any competitive disadvantage to manufacturers whose engines or vehicles achieve the required degree of emission reduction''. The analysis presented in detail in the Draft Technical Support Document deals with an assessment of the cost of compliance, using essentially the same methodology that has historically been used to establish NCPs. We believe that our estimates of the costs are appropriate and that the methodology is sound. In establishing prior NCP rules, we have frequently made it clear that satisfying the statutory objective of protecting the complying manufacturer was paramount.

The NCP generic rule establishes an approach which attempts to remove any competitive disadvantage to complying manufacturers by assessing a cost to the manufacturer of a non-complying engine in the form of an NCP, with the expectation that this cost is at least equivalent to or exceeds the value of the competitive benefit gained by building a noncomplying engine. Imposing such a cost is a way to level the playing field without interfering in the actual marketing or pricing of the engines. The problem here is that for some factors it is hard to quantify with certainty the value of this competitive benefit, and EPA is concerned that the calculation may not remove all competitive disadvantages.

1. Purchaser Perception Effects on Competition

A manufacturer of a non-complying engine generally gains a competitive advantage or benefit of two types. The first typically involves production expenses saved by not producing a complying engine, such as fixed costs, hardware costs, and the like. The second category involves, in some cases, the competitive benefits gained by producing an engine that has better performance characteristics compared to a complying engine, including reduced operating expenses for the purchasers of noncomplying engines. In addition, manufacturers may realize a reduced number of warranty claims by producing current technology noncomplying engines.

The first category is easier to quantify, as it involves considering costs directly incurred by the industry, and it is generally easier to get a fuller quantification of amounts in categories such as hardware costs. The second category is much harder to quantify with certainty. For example, as discussed below with respect to fuel economy, the actual amount of savings to the operator will vary based on several factors. An even harder to quantify competitive advantage is the benefit in the marketplace from producing an engine that is, or may be perceived to perform better, such as being more durable or reliable, and thus less prone to malfunction or breakdown. Including the cost of warranty claims and related expenses for the new technology engines in the NCP is one way to take into consideration the expected durability of complying engines. Including this cost helps to level the playing field with respect to this increased cost experienced by manufacturers of complying engines. This cost component of the NCP is therefore like the costs in the first category—out of pocket expenses experienced by complying manufacturers that a non-complying manufacturer might otherwise avoid.

There is significant uncertainty as to whether warranty and related costs in the NCP calculation fully reflect the competitive benefit gained in the marketplace by a non-complying engine. This competitive benefit could readily be greater than the out-of-pocket warranty expenses paid by the manufacturer of a complying engine. For example, non-complying engines may be either perceived or may in fact be more reliable during the early years of the transition to the new technology engines. This difference in performance gives a competitive advantage to producers of noncomplying engines. In order to remove this advantage, the cost of an NCP needs to account for the marketplace value of this difference in performance.

However, it is hard to quantify this value with certainty. For example it is hard to quantify in dollar terms the value purchasers will attribute to a real or perceived difference in durability or reliability. There is little real world experience with the new technology engines; hence it will be hard for a purchaser to judge with certainty the actual difference in reliability and the increased costs associated with it. It is also unlikely that the dollar amount of a warranty claim would fully reflect the loss in value expected from a malfunction or breakdown. The purchaser experiences both the repair expenses as well as down time for their equipment, disruption of their business, and other potential adverse impacts, which may not be fully covered by payment of a warranty claim. Especially where there is little historical evidence to rely on regarding a new technology, there may be significant uncertainty concerning the reliability of new technology engines when they are first introduced, and the value a purchaser places on the proven reliability of an older technology engine may therefore be magnified. While this proposal includes costs related to downtime and demurrage expenses during warranty repairs in the NCP, it is not clear how, as part of a business decision, the engine purchasers will trade-off higher purchase costs for the noncomplying engine versus the uncertainty of the reliability and durability of the new technology.

This is potentially a significant issue in this action because there is reason to believe that manufacturers may choose to make extensive use of NCPs and continue to produce pre-2004 technology engines. As has been the case in past NCP rules, where a noncomplying manufacturer does essentially nothing in terms of new technology (i.e., produces an upper limit engine), it must pay an NCP based on COC_{90}. The noncomplying manufacturer would then raise prices on its engines to levels comparable to those for complying engines in order to be able to capture back at least part of that NCP (the portion related to first price increase). The noncomplying manufacturer may even be able to charge a premium (relative to the first price increase of the complying manufacturer) if the engine purchaser perceives its ''old technology'' engine to be more desirable than the relatively unproven new technology engine.

Thus, in summary, we have three related factors affecting the issue of whether the proposed NCP would remove competitive disadvantage (purchase price, operating cost, purchaser perception). Even with an NCP set at a level which addresses quantifiable cost differences between complying and non-complying engines, in the eyes of the purchaser there still may be an advantage to paying the higher first cost for an engine (including the NCP) with known performance.

It is difficult to establish the degree to which the NCP calculation discussed above will fully remove any competitive advantage for non-compliers attributable to purchaser perception. Therefore, EPA is requesting comment on whether there is an additional factor that should be included in the NCP calculation and on methods to value these potential performance advantages. If engine purchaser perception favors noncomplying engines, this affects market share and thus business viability, per engine amortized fixed costs, and overall profitability. Therefore, we are considering adding a factor to the NCP formula to address

such an advantage if it exists, and there is an appropriate way to quantify it. Conceptually, such a factor would need to be equal to the purchase price difference at which a potential purchaser would be indifferent between purchasing a complying and non-complying engine, after accounting for all of the factors that are currently included in the proposed NCP calculation (e.g., fuel costs, maintenance, warranty, demurrage, and the revenue impact of additional engine weight. These factors are discussed in more detail in the draft Technical Support Document for this proposal. EPA requests comment on whether such an additional factor is needed here and if so what is the appropriate means to implement this adjustment. Commenters who believe that such a factor is appropriately included in the NCP calculation should provide an empirical and quantitative basis for calculating the appropriate level at which to set it.

2. Projected Fuel Price

One of the most significant categories of cost is the impact of the standards on fuel consumption rates. However, this cost element is difficult to estimate because actual fuel costs will vary based on the price of the fuel and on the vehicle operation. We, therefore, are requesting comment on our estimates of the economic impact of increased fuel consumption.

Fuel price varies with time and with location. According to the Energy Information Administration (EIA), the national average highway diesel fuel price in February of 1999 was 95 cents per gallon (with taxes), but in October of 2000 it was $1.67 per gallon (with taxes). That represents a 76 percent increase in the fuel price within a two year period. The average price for diesel fuel over the past five years was $1.25 per gallon. This kind of variation makes it difficult to project future prices. For our analysis, we estimated the fuel price to be $1.50 for 2004 and 2005. This is equal to the national average highway diesel fuel price for last year. We are requesting comment on the use of the five-year average price of $1.25 per gallon. Our analysis projects that fuel costs will be five cents per gallon higher after 2005 to account for the additional cost of the very low sulfur fuel that will be required beginning in 2006. This would also be true if we started with the five-year average price instead of the 2000 price. Given the difficulty in projecting future fuel prices, we are also requesting comments on the concept of adjusting the NCP based on price of diesel fuel. This could be done in two ways. First, we could adjust the NCP by regulation before the beginning of the 2004 model year if we determine that the fuel price used to determine the NCP inputs is no longer appropriate. Second, we could finalize in this rulemaking a regulatory provision that makes COC_{50}, COC_{90} and MC_{50} functions of the national average highway diesel fuel price in the preceding year (or preceding five years). This would be similar to the use of the Consumer Price Index to adjust the penalties for inflation (see 40 CFR 86.113–87(a)(4). The NCP could be adjusted ''automatically'' using the latest EIA estimate of national average highway diesel fuel price, or some other independent estimate.

In addition, at any given time, fuel prices before taxes can vary regionally by as much as ±10 percent from the national average. This is compounded by differences in state taxes, which vary from 8 to 29 cents per gallon. This regional variability is potentially significant for our 90th percentile analysis. Some trucks may operate locally in an area that has fuel prices significantly higher than the national average. However, we believe that the number of these trucks will be relatively small, and thus did not include a regional fuel price component in our 90th percentile analysis. Nevertheless, we request comment on this issue.

Another important factor in estimating fuel cost is how much fuel a model year 2004 vehicle will use over its lifetime. This is most important for heavy-heavy duty engines. Some vehicles may be scrapped after their useful life (435,000 miles) while others may be rebuilt more than once and not be scrapped until after 2 million miles. Thus, the fuel cost could vary by a factor of four from one vehicle to another. The mileage estimates that we used in our analysis are shown in the table below. You should read the Draft Technical Support Document for more information about how we used these mileage estimates.

ESTIMATES OF LIFETIME VEHICLE MILES TRAVELED (VMT) USED IN COST ANALYSIS

	VMT for average vehicle	VMT used for COC_{90} analysis
Light Heavy	209,000	280,000
Medium Heavy	262,000	343,000
Heavy Heavy	767,000	1,000,000

Finally, our methodology for calculating the cost of changes in fuel consumption uses estimates of average miles driven per gallon of fuel used. These estimates are 14.0, 8.0 and 6.0 miles per gallon (MPG) for light-, medium, and heavy-heavy duty, respectively. We used these same estimates for both the COC_{50} and COC_{90} analyses. Using different estimates could significantly change the projected costs. For a typical light-heavy duty vehicle, where we are projecting a decrease in the brake-specific fuel consumption rate, using a higher MPG rate would increase net costs for a given number of miles traveled because the fuel savings would be reduced. The opposite is true for medium- and heavy-heavy duty, where we project increases in brake-specific fuel consumption rates. For these larger engines, using a higher MPG rate would decrease net costs for a given number of miles traveled. We request comment on these MPG estimates.

3. Discount Rates

All of the compliance costs in this analysis are presented in terms of net present value (NPV) for calendar year 2004. This means that costs that occur before 2004 are adjusted upward, and costs that occur after 2004 are adjusted downward to reflect the time or opportunity value of the money involved. (i.e., discounted).

In our analysis, each manufacturer's pre-production investment costs were adjusted upward to reflect the lost opportunity cost or the cost of borrowing the capital for the investment. A manufacturer would typically seek to set its prices to recover this adjusted investment from sales within the first several years of production. We used a seven percent annual discount rate for these costs, as we have done in previous analyses for pre-production costs. EPA also used a seven percent discount rate in

Regulatory Impact Analyses for the 1997 and 2000 FRMs that established the 2004 standards. This rate is based on studies which indicate that this has been a reasonable opportunity cost of diverting private capital to support Federal regulatory objectives (See OMB Circular A–94; available at www.whitehouse.gov/omb/circulars/a094/a094.html). We request comment in whether this rate is appropriate for the opportunity costs for the period of 1998 through 2003, the time period when the 2004 model year investment is being made by the manufacturers.

The NPV analysis also requires that all in-use operating costs be adjusted downward to reflect the time value of money for future costs. More specifically, the stream of operating costs must be discounted to make them equivalent to costs incurred at the time of purchase. Truck purchasers would use this approach before purchase when comparing future operating costs of two or more engines before purchase. We used a seven percent discount rate for these costs as well. However, there is evidence in other contexts that users might apply a different discount rate than seven percent when considering future operating costs during a purchase decision. We request comment on whether there is evidence to support the application of such an alternative discount rate to operating costs in the various segments of the heavy duty engine market. Your comments in support of an alternative discount rate (a higher or lower value) should include a discussion of the supporting economic and business rationale for the alternative rate. We have included an example of the impact on the NCP parameters from using a smaller discount rate (three percent) in the draft Technical Support Document for this proposal.

IV. Economic Impact

Because the use of NCPs is optional, manufacturers have the flexibility and will likely choose whether or not to use NCPs based on their ability to comply with emissions standards. If no HDE manufacturer elects to use NCPs, these manufacturers and the users of their products will not incur any additional costs related to NCPs. NCPs remedy the potential problem of having a manufacturer forced out of the marketplace due to that manufacturer's inability to conform to new, strict emission standards in a timely manner. Without NCPs, a manufacturer which has difficulty certifying HDEs in conformance with emission standards or whose engines fail a SEA has only two alternatives: fix the nonconforming engines, perhaps at a prohibitive cost, or prevent their introduction into commerce. The availability of NCPs provides manufacturers with a third alternative: continue production and introduce into commerce upon payment of a penalty an engine that exceeds the standard until an emission conformance technique is developed. Therefore, NCPs represent a regulatory mechanism that allows affected manufacturers to have increased flexibility. A decision to use NCPs may be a manufacturer's only way to continue to introduce HDEs into commerce.

V. Environmental Impact

When evaluating the environmental impact of this proposed rule, one must keep in mind that, under the Act, NCPs are a consequence of enacting new, more stringent emissions requirements for heavy duty engines. Emission standards are set at a level that most, but not necessarily all, manufacturers can achieve by the model year in which the standard becomes effective. Following *International Harvester* v. *Ruckelshaus*, 478 F. 2d 615 (D.C. Cir. 1973), Congress realized the dilemma that technology-forcing standards were likely to cause, and allowed manufacturers of heavy-duty engines to certify nonconforming vehicles/engines upon the payment of an NCP, under certain conditions. This mechanism would allow manufacturer(s) who cannot meet technology-forcing standards immediately to continue to manufacture these nonconforming engines while they tackle the technological problems associated with meeting new emission standard(s). Thus, as part of the statutory structure to force technological improvements without driving manufacturers out of the market, NCPs provide flexibility that fosters long-term emissions improvement through the setting of lower emission standards at an earlier date than could otherwise be possible. By design, NCPs encourage the technological laggard that is using NCPs to reduce emission levels to the more stringent standard as quickly as possible.

However, we believe that the potential exists for there to be more widespread use of the NCPs proposed in this rule in comparison to prior NCPs, thus indicating the possibility for an environmental impact somewhat greater in magnitude than we have suggested in prior NCP rules. Nevertheless, we believe that any such impacts would be short-term in nature. By including an annual adjustment factor that increases the levels of the penalties, the NCP program is structured such that the incentives to produce engines that meet the standards increase year-by-year. The practical impact of this adjustment factor is that the NCPs will rapidly become an obsolete option for non-complying manufacturers. However, we have no way of predicting at this time how many manufacturers will make use of the proposed NCPs, or how many engine families would be subject to the NCP program. Because of these uncertainties we are unable to accurately quantify the potential impact the proposed NCPs might have on emission inventories, although, as stated above, any impacts are expected to be short-term in nature.

VI. Public Participation

We request comment on all aspects of this proposal. This section describes how you can participate in this process.

A. How Do I Submit Comments?

We are opening a formal comment period by publishing this document. We will accept comments for the period indicated under **DATES** above. If you have an interest in the program described in this document, we encourage you to comment on any aspect of this rulemaking. We request comment on various topics throughout this proposal.

Your comments will be most useful if you include appropriate and detailed supporting rationale, data, and analysis. If you disagree with parts of the proposed program, we encourage you to suggest and analyze alternate approaches to meeting the air quality goals described in this proposal. You should send all comments, except those containing proprietary information, to our Air Docket (see **ADDRESSES**) before the end of the comment period.

If you submit proprietary information for our consideration, you should clearly separate it from other comments by labeling it ''Confidential Business Information.'' You should also send it directly to the contact person listed under **FOR FURTHER INFORMATION CONTACT** instead of the public docket. This will help ensure that no one inadvertently places proprietary information in the docket. If you want us to use your confidential information as part of the basis for the final rule, you should send a non-confidential version of the document summarizing the key data or information. We will disclose information covered by a claim of confidentiality only through the application of procedures described in 40 CFR part 2. If you don't identify information as confidential when we receive it, we may make it available to the public without notifying you.

B. Will There Be a Public Hearing?

We will hold a public hearing in the Washington, DC area on February 15, 2002. The hearings will start at 10:00 am and continue until everyone has had a chance to speak.

If you would like to present testimony at a public hearing, we ask that you notify the contact person listed above at least ten days before the hearing. You should estimate the time you will need for your presentation and identify any needed audio/visual equipment. We suggest that you bring copies of your statement or other material for the EPA panel and the audience. It would also be helpful if you send us a copy of your statement or other materials before the hearing.

We will make a tentative schedule for the order of testimony based on the notifications we receive. This schedule will be available on the morning of each hearing. In addition, we will reserve a block of time for anyone else in the audience who wants to give testimony. We will conduct the hearing informally, and technical rules of evidence won't apply. We will arrange for a written transcript of the hearing and keep the official record of the hearing open for 30 days to allow you to submit supplementary information. You may make arrangements for copies of the transcript directly with the court reporter.

VII. Administrative Requirements

A. Regulatory Planning and Review: Executive Order 12866

Under Executive Order 12866 (58 FR 51735, Oct. 4, 1993), the Agency is required to determine whether this regulatory action would be ''significant'' and therefore subject to review by the Office of Management and Budget (OMB) and the requirements of the Executive Order. The order defines a ''significant regulatory action'' as any regulatory action that is likely to result in a rule that may:

- Have an annual effect on the economy of $100 million or more or adversely affect in a material way the economy, a sector of the economy, productivity, competition, jobs, the environment, public health or safety, or State, local, or tribal governments or communities;
- Create a serious inconsistency or otherwise interfere with an action taken or planned by another agency;
- Materially alter the budgetary impact of entitlements, grants, user fees, or loan programs or the rights and obligations of recipients thereof; or,
- Raise novel legal or policy issues arising out of legal mandates, the President's priorities, or the principles set forth in the Executive Order.

Pursuant to the terms of Executive Order 12866, OMB has notified EPA that it considers this a ''significant regulatory action'' within the meaning of the Executive Order. EPA has submitted this action to OMB for review. Changes made in response to OMB suggestions or recommendations will be documented in the public record. This regulation is intended to assist manufacturers that are having difficulty developing and marketing vehicles which comply with the 2004 NMHC+NO_X standard for diesel heavy-duty engines and heavy-duty vehicles. Without this proposed rule, a manufacturer experiencing difficulty in complying with this new emission standard (after the use of credits) has only two alternatives: fix the non-conforming engines for the associated model years or not sell them at all. NCPs provide manufacturers with additional time to bring their engines into conformity. In addition, NCPs are calculated to deprive non-conforming manufacturers of any cost savings and competitive advantages stemming from marketing a non-conforming engine. Thus, NCPs will not have significant adverse effects on competition, employment, investment, productivity, innovation or on the ability of United States-based enterprises to compete with foreign-based enterprises in domestic or export markets.

B. Regulatory Flexibility Act, as Amended by the Small Business Regulatory Enforcement Fairness Act of 1996 (SBREFA), 5 U.S.C. 601 et. seq.

The Regulatory Flexibility Act (RFA) generally requires an agency to prepare a regulatory flexibility analysis of any rule subject to notice and comment rulemaking requirements under the Administrative Procedure Act or any other statute unless the agency certifies that the rule will not have a significant economic impact on a substantial number of small entities. Small entities include small businesses, small organizations, and small governmental jurisdictions.

For purposes of assessing the impacts of today's rule on small entities, small entity is defined as: (1) A small business that has no more than 1,000 employees; (2) a small governmental jurisdiction that is a government of a city, county, town, school district or special district with a population of less than 50,000; and (3) a small organization that is any not-for-profit enterprise which is independently owned and operated and is not dominant in its field.

After considering the economic impacts of today's proposed rule on small entities, I certify that this action will not have a significant economic impact on a substantial number of small entities. This proposed rule will not impose any requirements on small entities. The non-conformance penalties that would be established by this proposed rule are for emission standards that pertain to heavy-duty diesel engines. When these emission standards were established, the final rulemaking (65 FR 59895, October 6, 2000) noted that only two small entities were known to be affected. Those entities were small businesses that certify alternative fuel engines or vehicles, either newly manufactured or modified from previously certified gasoline engines. The emission standards for heavy-duty diesel engines, for which NCPs are proposed, do not pertain to the engines manufactured by these businesses.

C. Paperwork Reduction Act

The information collection requirements in this proposed rule will be submitted for approval to the Office of Management and Budget (OMB) under the *Paperwork Reduction Act,* 44 U.S.C. 3501 *et seq.* An Information Collection Request (ICR) document will be prepared and its availability for comment will be announced in a separate **Federal Register** document when the ICR is sent to OMB.

The existing regulations in 40 CFR part 86, subpart L require that manufacturers seeking NCPs annually conduct a Production Compliance Audit (PCA) for each engine configuration. This means that they must perform additional emission testing. This testing is necessary to determine more precisely the emission levels for engine configurations that exceed an applicable emission standard. While the use of NCPs is voluntary, manufacturers choosing to use them must submit the additional testing information (40 CFR 86.1106–87). Manufacturers may assert that some or all of the information provided is entitled to confidential treatment as provided by 40 CFR part 2, subpart B.

EPA has previously estimated the annual burden associated with NCPs to 906 hours and $51,786, based on a projection of six respondents per year. We estimated the average burden hours per response to 144 hours for reporting, and 7 hours for recordkeeping. Burden means the total time, effort, or financial resources expended by persons to generate, maintain, retain, or disclose or provide information to or for a Federal agency. This includes the time needed

to review instructions; develop, acquire, install, and utilize technology and systems for the purposes of collecting, validating, and verifying information, processing and maintaining information, and disclosing and providing information; adjust the existing ways to comply with any previously applicable instructions and requirements; train personnel to be able to respond to a collection of information; search data sources; complete and review the collection of information; and transmit or otherwise disclose the information.

An Agency may not conduct or sponsor, and a person is not required to respond to a collection of information unless it displays a currently valid OMB control number. The OMB control numbers for EPA's regulations are listed in 40 CFR part 9 and 48 CFR chapter 15.

D. Unfunded Mandates Reform Act

Title II of the Unfunded Mandates Reform Act of 1995 (UMRA), Public Law 104–4, establishes requirements for Federal agencies to assess the effects of their regulatory actions on State, local, and tribal governments and the private sector. Under section 202 of the UMRA, EPA generally must prepare a written statement, including a cost-benefit analysis, for proposed and final rules with ''Federal mandates'' that may result in expenditures to State, local, and tribal governments, in the aggregate, or to the private sector, of $100 million or more in any one year. Before promulgating an EPA rule for which a written statement is needed, section 205 of the UMRA generally requires EPA to identify and consider a reasonable number of regulatory alternatives and adopt the least costly, most cost-effective or least burdensome alternative that achieves the objectives of the rule. The provisions of section 205 do not apply when they are inconsistent with applicable law. Moreover, section 205 allows EPA to adopt an alternative other than the least costly, most cost-effective or least burdensome alternative if the Administrator publishes with the final rule an explanation why that alternative was not adopted.

Before EPA establishes any regulatory requirements that may significantly or uniquely affect small governments, including tribal governments, it must have developed under section 203 of the UMRA a small government agency plan. The plan must provide for notifying potentially affected small governments, enabling officials of affected small governments to have meaningful and timely input in the development of EPA regulatory proposals with significant Federal intergovernmental mandates, and informing, educating, and advising small governments on compliance with the regulatory requirements.

This proposed rule contains no Federal mandates (under the regulatory provisions of Title II of the UMRA) for State, local, or tribal governments or the private sector. The proposed rule would impose no enforceable duty on any State, local or tribal governments or the private sector.

EPA has determined that this rule does not contain a Federal mandate that may result in expenditures of $100 million or more for State, local, and tribal governments, in the aggregate, or the private sector in any one year. Because the use of NCPs is optional, manufacturers have the flexibility and will likely choose whether or not to use NCPs based on their ability to comply with emissions standards. The availability of NCPs provides manufacturers with a third alternative: continue production and introduce into commerce upon payment of a penalty an engine that exceeds the standard until an emission conformance technique is developed. Therefore, NCPs represent a regulatory mechanism that allows affected manufacturers to have increased flexibility. Thus, today's rule is not subject to the requirements of sections 202 and 205 of the UMRA.

E. Executive Order 13175: Consultation and Coordination With Indian Tribal Governments

Executive Order 13175, entitled ''Consultation and Coordination with Indian Tribal Governments'' (65 FR 67249, November 6, 2000), requires EPA to develop an accountable process to ensure ''meaningful and timely input by tribal officials in the development of regulatory policies that have tribal implications.'' ''Policies that have tribal implications'' is defined in the Executive Order to include regulations that have ''substantial direct effects on one or more Indian tribes, on the relationship between the Federal government and the Indian tribes, or on the distribution of power and responsibilities between the Federal government and Indian tribes.''

This proposed rule does not have tribal implications. It will not have substantial direct effects on tribal governments, on the relationship between the Federal government and Indian tribes, or on the distribution of power and responsibilities between the Federal government and Indian tribes, as specified in Executive Order 13175. The proposed non-conformance penalties and associated requirements for heavy-duty diesel engine manufacturers in this proposal would have national applicability, and thus would not uniquely affect the communities of Indian Tribal Governments. Thus, Executive Order 13175 does not apply to this rule.

In the spirit of Executive Order 13175, and consistent with EPA policy to promote communications between EPA and tribal governments, EPA specifically solicits additional comment on this proposed rule from tribal officials.

F. National Technology Transfer and Advancement Act

Section 12(d) of the National Technology Transfer and Advancement Act of 1995 (NTTAA), Section 12(d) of Public Law 104–113, directs EPA to use voluntary consensus standards in its regulatory activities unless it would be inconsistent with applicable law or otherwise impractical. Voluntary consensus standards are technical standards (*e.g.,* materials specifications, test methods, sampling procedures, and business practices) developed or adopted by voluntary consensus standards bodies. The NTTAA directs EPA to provide Congress, through OMB, explanations when the Agency decides not to use available and applicable voluntary consensus standards.

This proposed rulemaking does not involve technical standards. Therefore, EPA is not considering the use of any voluntary consensus standards.

EPA welcomes comments on this aspect of the proposed rulemaking and, specifically, invites the public to identify potentially-applicable voluntary consensus standards and to explain why such standards should be used in this regulation.

G. Executive Order 13045: Children's Health Protection

Executive Order 13045: ''Protection of Children from Environmental Health Risks and Safety Risks'' (62 FR 19885, April 23, 1997) applies to any rule that: (1) Is determined to be ''economically significant'' as defined under Executive Order 12866, and (2) concerns an environmental health or safety risk that EPA has reason to believe may have a disproportionate effect on children. If the regulatory action meets both criteria, the Agency must evaluate the environmental health or safety effects of the planned rule on children, and explain why the planned regulation is preferable to other potentially effective and reasonably feasible alternatives considered by the Agency.

EPA interprets Executive Order 13045 as applying only to those regulatory actions that are based on health or safety risks, such that the analysis required

under section 5–501 of the Order has the potential to influence the regulation. This proposed rule is not subject to Executive Order 13045 because it does not establish an environmental standard intended to mitigate health or safety risks.

H. Executive Order 13132: Federalism

Executive Order 13132, entitled ''Federalism'' (64 FR 43255, August 10, 1999), requires EPA to develop an accountable process to ensure ''meaningful and timely input by State and local officials in the development of regulatory policies that have federalism implications.'' ''Policies that have federalism implications'' is defined in the Executive Order to include regulations that have ''substantial direct effects on the States, on the relationship between the national government and the States, or on the distribution of power and responsibilities among the various levels of government.''

This proposed rule does not have federalism implications. It will not have substantial direct effects on the States, on the relationship between the national government and the States, or on the distribution of power and responsibilities among the various levels of government, as specified in Executive Order 13132. This proposed rule proposes to adopt non-conformance penalties for national emission standards for certain categories of motor vehicles. The requirements of the proposed rule would be enforced by the federal government at the national level. Thus, Executive Order 13132 does not apply to this rule.

In the spirit of Executive Order 13132, and consistent with EPA policy to promote communications between EPA and State and local governments, EPA specifically solicits comment on this proposed rule from State and local officials.

I. Executive Order 13211: Energy Effects

This proposed rule is not a ''significant energy action'' as defined in Executive Order 13211, ''Actions Concerning Regulations That Significantly Affect Energy Supply, Distribution, or Use'' (66 FR 28355, May 22, 2001) because it is not likely to have a significant adverse effect on the supply, distribution, or use of energy. As described in the 2000 final rule in which we affirmed the 2004 standard (65 FR 59896, Oct. 6, 2000), we have concluded that there would be no net long-term change in the fuel consumption performance of heavy-duty diesel engines as a result of the 2004 model year emission standards. However, there may be the potential for higher fuel consumption rates in the short term as diesel engine manufacturers work to balance the inherent tradeoff between control of NO_X emissions and fuel consumption. The availability of NCPs for the 2004 and later model years provides manufacturers with another option for balancing this tradeoff and working towards optimizing fuel consumption and emissions—they would be able to use NCPs to emit somewhat higher NO_X levels than they would otherwise be allowed, while at the same time avoiding undesirable fuel consumption impacts. Thus, we have concluded that this proposed rule is not likely to have any significant adverse energy effects.

J. Plain Language

This document follows the guidelines of the June 1, 1998 Executive Memorandum on Plain Language in Government Writing. To read the text of the regulations, it is also important to understand the organization of the Code of Federal Regulations (CFR). The CFR uses the following organizational names and conventions.

Title 40—Protection of the Environment

Chapter I—Environmental Protection Agency

Subchapter C—Air Programs. This contains parts 50 to 99, where the Office of Air and Radiation has usually placed emission standards for motor vehicle and nonroad engines.

Subchapter U—Air Programs Supplement. This contains parts 1000 to 1299, where we intend to place regulations for air programs in future rulemakings.

Part 86—Control of Emissions from New and In-use Highway Vehicles and Engines. Provisions of this part apply generally to highway vehicles and engines used in highway vehicles.

Each part in the CFR has several subparts, sections, and paragraphs. The following illustration shows how these fit together.

Part 86

Subpart A

Section 86.1

(a)
(b)
(1)
(2)
(i)
(ii)
(A)
(B)

A cross reference to Sec. 1048.001(b) in this illustration would refer to the parent paragraph (b) and all its subordinate paragraphs. A reference to ''Sec. 1048.001(b) introductory text'' would refer only to the single, parent paragraph (b).

List of Subjects in 40 CFR Part 86

Administrative practice and procedure, Confidential Business Information, Incorporation by reference, Labeling, Motor vehicle pollution, Reporting and recordkeeping requirements.

Dated: January 10, 2002.

Christine Todd Whitman,

Administrator.

For the reasons set forth in the preamble, chapter I, title 40 of the Code of Federal Regulations is proposed to be amended as follows:

PART 86—CONTROL OF EMISSIONS FROM NEW AND IN-USE HIGHWAY VEHICLES AND ENGINES

1. The authority citation for part 86 continues to read as follows:

Authority: 42 U.S.C. 7401–7671q.

2. Section 86.1105–87 is proposed to be amended by revising paragraph (e) and by adding paragraph (i), to read as follows:

§ 86.1105–87 Emission standards for which nonconformance penalties are available.

* * * * *

(e) The values of COC_{50}, COC_{90}, and MC_{50} in paragraphs (a) and (b) of this section are expressed in December 1984 dollars. The values of COC_{50}, COC_{90}, and MC_{50} in paragraphs (c) and (d) of this section are expressed in December 1989 dollars. The values of COC_{50}, COC_{90}, and MC_{50} in paragraph (f) of this section are expressed in December 1991 dollars. The values of COC_{50}, COC_{90}, and MC_{50} in paragraphs (g) and (h) of this section are expressed in December 1994 dollars. The values of COC_{50}, COC_{90}, and MC_{50} in paragraph (i) of this section are expressed in December 2001 dollars. These values shall be adjusted for inflation to dollars as of January of the calendar year preceding the model year in which the NCP is first available by using the change in the overall Consumer Price Index, and rounded to the nearest whole dollar in accordance with ASTM E29–67 (reapproved 1980), Standard Recommended Practice for Indicating Which Places of Figures are to be Considered Significant in Specified Limiting Values. The method was approved by the Director of the Federal Register in accordance with 5 U.S.C. 552(a) and 1 CFR part 51. This document is available from ASTM, 1916 Race Street, Philadelphia, PA 19103, and is also available for inspection as part of Docket A–91–06, located at the

Central Docket Section, EPA, 401 M Street, SW, Washington, DC or at the Office of the Federal Register, 800 North Capitol Street, NW, suite 700, Washington, DC. This incorporation by reference was approved by the Director of the Federal Register on January 13, 1992. These materials are incorporated as they exist on the date of the approval and a notice of any change in these materials will be published in the **Federal Register**.

* * * * *

(i) Effective in the 2004 model year, NCPs will be available for the following emission standard:

(1) Diesel heavy-duty engine non-methane hydrocarbon plus oxides of nitrogen standard of 2.4 grams per brake horsepower-hour (or alternatively, 2.5 grams per brake horsepower-hour with a limit on non-methane hydrocarbon emissions of 0.5 grams per brake horsepower-hour), in § 86.004–11(a)(1)(i).

(i) For light heavy-duty diesel engines:

(A) The following values shall be used to calculate an NCP in accordance with § 86.1113–87(a):

(*1*) COC_{50}: $1080.

(*2*) COC_{90}: $2610.

(*3*) MC_{50}: $2000 per gram per brake horsepower-hour.

(*4*) F: 1.3.

(*5*) UL: 4.5 grams per brake horsepower-hour; notwithstanding § 86.1104–91.

(B) The following factor shall be used to calculate the engineering and development component of the NCP for the standard set forth in § 86.004–11(a)(1)(i) in accordance with § 86.1113–87(h): 0.333.

(ii) For medium heavy-duty diesel engines:

(A) The following values shall be used to calculate an NCP in accordance with § 86.1113–87(a):

(*1*) COC_{50}: $3360.

(*2*) COC_{90}: $6870.

(*3*) MC_{50}: $1800 per gram per brake horsepower-hour.

(*4*) F: 1.3.

(*5*) UL: 4.5 grams per brake horsepower-hour; notwithstanding § 86.1104–91.

(B) The following factor shall be used to calculate the engineering and development component of the NCP for the standard set forth in § 86.004–11(a)(1)(i) in accordance with § 86.1113–87(h): 0.167.

(iii) For heavy heavy-duty diesel engines:

(A) The following values shall be used to calculate an NCP in accordance with § 86.1113–87(a):

(*1*) COC_{50}: $8940.

(*2*) COC_{90}: $14790.

(*3*) MC_{50}: $7200 per gram per brake horsepower-hour.

(*4*) F: 1.3.

(*5*) UL: 6.0 grams per brake horsepower-hour; notwithstanding § 86.1104–91.

(B) The following factor shall be used to calculate the engineering and development component of the NCP for the standard set forth in § 86.004–11(a)(1)(i) in accordance with § 86.1113–87(h): 0.067.

(iv) For diesel urban bus engines:

(A) The following values shall be used to calculate an NCP in accordance with § 86.1113–87(a):

(*1*) COC_{50}: $4400.

(*2*) COC_{90}: $7120.

(*3*) MC_{50}: $4895 per gram per brake horsepower-hour.

(*4*) F: 1.3.

(*5*) UL: 4.5 grams per brake horsepower-hour; notwithstanding § 86.1104–91.

(B) The following factor shall be used to calculate the engineering and development component of the NCP for the standard set forth in § 86.004–11(a)(1)(i) in accordance with § 86.1113–87(h): 0.136.

(2) [Reserved]

[FR Doc. 02–1109 Filed 1–15–02; 8:45 am]

BILLING CODE 6560–50–P

ENVIRONMENTAL PROTECTION AGENCY

40 CFR Part 180

[OPP–301192; FRL–6810–3]

RIN 2070–AB78

Nicotine; Proposed Revocation of Tolerances

AGENCY: Environmental Protection Agency (EPA).

ACTION: Proposed rule.

SUMMARY: This document proposes to revoke specific tolerances forresidues of nicotine-containing compounds used as insecticides and for the insecticide nicotine because nicotine is no longer registered for those uses in the United States. The regulatory actions proposed in this document are part of the Agency's reregistration program under the Federal Insecticide, Fungicide, and Rodenticide Act (FIFRA), and the tolerance reassessment requirements of the Federal Food, Drug, and Cosmetic Act (FFDCA) section 408(q), as amended by the Food Quality Protection Act (FQPA) of 1996. By law, EPA is required by August 2002 to reassess 66% of the tolerances in existence on August 2, 1996, or about 6,400 tolerances. The regulatory actions in this document pertain to the proposed revocation of 66 nicotine tolerances which would be counted among tolerance/exemption reassessments made toward the August, 2002 review deadline.

DATES: Comments, identified by docket control numberOPP–301192, must be received on or before March 18, 2002.

ADDRESSES: Comments may be submitted by mail, electronically, or in person. Please follow the detailed instructions for each method as provided in Unit I. of the **SUPPLEMENTARY INFORMATION.** To ensure proper receipt by EPA, it is imperative that you identify docket control number OPP–301192 in the subject line on the first page of your response.

FOR FURTHER INFORMATION CONTACT: By mail: Joseph Nevola, Special Review and Reregistration Division (7508C), Office of Pesticide Programs, Environmental Protection Agency, 1200 Pennsylvania Ave, NW., Washington, DC 20460; telephone number: (703) 308–8037; e-mail address: nevola.joseph@epa.gov.

SUPPLEMENTARY INFORMATION:

I. General Information

A. Does this Action Apply to Me?

You may be affected by this action if you are an agricultural producer, food manufacturer, or pesticide manufacturer. Potentially affected categories and entities may include, but are not limited to:

Categories	NAICS	Examples of Potentially Affected Entities
Industry	111 112 311 32532	Crop production Animal production Food manufacturing Pesticide manufacturing

This listing is not intended to be exhaustive, but rather provides a guide for readers regarding entities likely to be affected by this action. Other types of entities not listed in the table could also be affected. The North American Industrial Classification System (NAICS) codes have been provided to assist you and others in determining whether or not this action might apply to certain entities. If you have questions regarding the applicability of this action to a particular entity, consult the person listed under **FOR FURTHER INFORMATION CONTACT**.

B. How Can I Get Additional Information, Including Copies of this Document and Other Related Documents?

1. *Electronically.*You may obtain electronic copies of this document, and certain other related documents that might be available electronically, from the EPA Internet Home Page at http://www.epa.gov/. To access this document, on the Home Page select ''Laws and Regulations,'' ''Regulations and Proposed Rules,'' and then look up the entry for this document under the ''**Federal Register**—Environmental Documents.'' You can also go directly to the **Federal Register** listings at http://www.epa.gov/fedrgstr/. A frequently updated electronic version of 40 CFR part 180 is available at http://www.access.gpo.gov/nara/cfr/cfrhtml_180/Title_40/40cfr180_00.html, a beta site currently under development.

2. *In person.* The Agency has established an official record for this action under docket control number OPP–301192. The official record consists of the documents specifically referenced in this action, and other information related to this action, including any information claimed as Confidential Business Information (CBI). This official record includes the documents that are physically located in the docket, as well as the documents that are referenced in those documents. The public version of the official record does not include any information claimed as CBI. The public version of the official record, which includes printed, paper versions of any electronic comments submitted during an applicable comment period is available for inspection in the Public Information and Records Integrity Branch (PIRIB), Rm. 119, Crystal Mall# 2, 1921 Jefferson Davis Hwy., Arlington, VA, from 8:30 a.m. to 4 p.m., Monday through Friday, excluding legal holidays. The PIRIB telephone number is (703) 305–5805.

C. How and to Whom Do I Submit Comments?

You may submit comments through the mail, in person, or electronically. To ensure proper receipt by EPA, it is imperative that you identify docket control number OPP–301192 in the subject line on the first page of your response.

1. *By mail.* Submit your comments to: Public Information and Records Integrity Branch (PIRIB), Information Resources and Services Division (7502C), Office of Pesticide Programs (OPP), Environmental Protection Agency, 1200 Pennsylvania Ave., NW., Washington, DC 20460.

2. *In person or by courier.* Deliver your comments to: Public Information and Records Integrity Branch (PIRIB), Information Resources and Services Division (7502C), Office of Pesticide Programs (OPP), Environmental Protection Agency, Rm. 119, Crystal Mall #2, 1921 Jefferson Davis Hwy., Arlington, VA. The PIRIB is open from 8:30 a.m. to 4 p.m., Monday through Friday, excluding legal holidays. The PIRIB telephone number is (703) 305–5805.

3. *Electronically.* You may submit your comments electronically by e-mail to: opp-docket@epa.gov, or you can submit a computer disk as described in this unit. Do not submit any information electronically that you consider to be CBI. Electronic comments must be submitted as an ASCII file avoiding use of special characters and any form of encryption. Comments and data will also be accepted on standard disks in WordPerfect 6.1/8.0 or ASCII file format. All comments in electronic form must be identified by docket control number OPP–301192. Electronic comments may also be filed online at many Federal Depository Libraries.

D. How Should I Handle CBI that I Want to Submit to the Agency?

Do not submit any information electronically that you consider to be CBI. You may claim information that you submit to EPA in response to this document as CBI by marking any part or all of that information as CBI. Information so marked will not be disclosed except in accordance with procedures set forth in 40 CFR part 2. In addition to one complete version of the comment that includes any information claimed as CBI, a copy of the comment that does not contain the information claimed as CBI must be submitted for inclusion in the public version of the official record. Information not marked confidential will be included in the public version of the official record without prior notice. If you have any questions about CBI or the procedures for claiming CBI, please consult the person listed under **FOR FURTHER INFORMATION CONTACT**.

E. What Should I Consider as I Prepare My Comments for EPA?

You may find the following suggestions helpful for preparing your comments:

1. Explain your views as clearly as possible.

2. Describe any assumptions that you used.

3. Provide copies of any technical information and/or data you used that support your views.

4. If you estimate potential burden or costs, explain how you arrived at the estimate that you provide.

5. Provide specific examples to illustrate your concerns.

6. Offer alternative ways to improve the proposed rule or collection activity.

7. Make sure to submit your comments by the deadline in this document.

8. To ensure proper receipt by EPA, be sure to identify the docket control number assigned to this action in the subject line on the first page of your response. You may also provide the name, date, and **Federal Register** citation.

F. What Can I do if I Wish the Agency to Maintain a Tolerance that the Agency Proposes to Revoke?

This proposed rule provides a comment period of 60 days for any person to state an interest in retaining a tolerance proposed for revocation. If EPA receives a comment within the 60-day period to that effect, EPA will not proceed to revoke the tolerance immediately. However, EPA will take steps to ensure the submission of any needed supporting data and will issue an order in the **Federal Register** under FFDCA section 408(f) if needed. The order would specify data needed and the time frames for its submission, and would require that within 90 days some person or persons notify EPA that they will submit the data. If the data are not submitted as required in the order, EPA will take appropriate action under FFDCA.

EPA issues a final rule after considering comments that are submitted in response to this proposed rule. In addition to submitting comments in response to this proposal, you may also submit an objection at the time of the final rule. If you fail to file an objection to the final rule within the time period specified, you will have waived the right to raise any issues resolved in the final rule. After the specified time, issues resolved in the final rule cannot be raised again in any subsequent proceedings.

II. Background

A. What Action is the Agency Taking?

EPA is proposing to revoke specific tolerances for residues of nicotine-containing compounds used as insecticides and for the insecticide nicotine in or on commodities listed in the regulatory text because nicotine is no longer registered under FIFRA for

use on those commodities. It is EPA's general practice to propose revocation of those tolerances for residues of pesticide active ingredients on crop uses for which there are no active registrations under FIFRA, unless any person in comments on the proposal indicates a need for the tolerance to cover residues in or on imported commodities or domestic commodities legally treated.

Many food uses were removed from nicotine labels in 1992 and in 1994. On April 29, 1992 a FIFRA 6(f)(1) notice of receipt of a request to voluntarily cancel certain nicotine registrations was published in the **Federal Register** (57 FR 18146) (FRL–4056–6), with a use deletion date of July 28, 1992. On October 20, 1993 another 6(f)(1) notice of a receipt of request to voluntarily cancel certain nicotine registrations was published in the **Federal Register** (58 FR 54148) (FRL–4647–1), with a cancellation date of January 28, 1994. No residue data exist to support the tolerances being proposed for revocation. With the exception of cucumber, lettuce, and tomato, there are no other active food use registrations existing for nicotine-containing compounds or nicotine. Therefore, EPA is proposing to revoke a total of 66 tolerances, of which 62 tolerances are found in 40 CFR 180.167 and 4 tolerances are found in § 180.167a.

Specifically, in 40 CFR 180.167 EPA is proposing to revoke tolerances for the following: Apples; apricots; artichokes; asparagus; avocados; beans; beets (with or without tops) or beet greens alone; blackberries; boysenberries; broccoli; Brussels sprouts; cabbage; cauliflower; celery; cherries; citrus fruits; collards; corn; cranberries; currants; dewberries; eggplants; gooseberries; grapes; kale; kohlrabi; loganberries; melons; mushrooms; mustard greens; nectarines; okra; onions; parsley; parsnips (with or without tops) or parsnip greens alone; peaches; pears; peas; peppers; plums (fresh prunes); pumpkins; quinces; radishes (with or without tops) or radish tops; raspberries; rutabagas (with or without tops) or rutabaga tops; spinach; squash; strawberries; summer squash; Swiss chard; turnips (with or without tops) or turnip greens; and youngberries. In 40 CFR 180.167a EPA is proposing to revoke tolerances for eggs; poultry, fat; poultry, meat; and poultry, meat byproducts by removing § 180.167a in its entirety. For counting purposes, the tolerances depicted above as with or without tops are each counted as two tolerances.

In order to conform to current Agency practice, EPA is also proposing to revise the remaining tolerance commodity names in 40 CFR 180.167 for cucumbers to cucumber and tomatoes to tomato.

B. What is the Agency's Authority for Taking this Action?

A tolerance represents the maximum level for residues of pesticide chemicals legally allowed in or on raw agricultural commodities and processed foods. Section 408 of FFDCA, 21 U.S.C. 301 *et seq.*, as amended by the FQPA of 1996, Public Law 104–170, authorizes the establishment of tolerances, exemptions from tolerance requirements, modifications in tolerances, and revocation of tolerances for residues of pesticide chemicals in or on raw agricultural commodities and processed foods (21 U.S.C. 346(a)). Without a tolerance or exemption, food containing pesticide residues is considered to be unsafe and therefore adulterated under section 402(a) of the FFDCA. If food containing pesticide residues is considered to be adulterated, you may not distribute the product in interstate commerce (21 U.S.C. 331(a) and 342(a)). For a fooduse pesticide to be sold and distributed, the pesticide must not only have appropriate tolerances under the FFDCA, but also must be registered under FIFRA (7 U.S.C. *et seq.*). Fooduse pesticides not registered in the United States have tolerances for residues of pesticides in or on commodities imported into the United States.

It is EPA's general practice to propose revocation of tolerances for residues of pesticide active ingredients on crops for which FIFRA registrations no longer exist and on which the pesticide may therefore no longer be used in the United States. EPA has historically been concerned that retention of tolerances that are not necessary to cover residues in or on legally treated foods may encourage misuse of pesticides within the United States. Nonetheless, EPA will establish and maintain tolerances even when corresponding domestic uses are canceled if the tolerances, which EPA refers to as import tolerances, are necessary to allow importation into the United States of food containing such pesticide residues. However, where there are no imported commodities that require these import tolerances, the Agency believes it is appropriate to revoke tolerances for unregistered pesticides in order to prevent potential misuse.

Furthermore, as a general matter, the Agency believes that retention of import tolerances not needed to cover any imported food may result in unnecessary restriction on trade of pesticides and foods. Under section 408 of the FFDCA, a tolerance may only be established or maintained if EPA determines that the tolerance is safe based on a number of factors, including an assessment of the aggregate exposure to the pesticide and of the cumulative effects of such pesticide and other substances that have a common mechanism of toxicity. In doing so, EPA must consider potential contributions to such exposure from all tolerances. If the cumulative risk is such that the tolerances in aggregate are not safe, then every one of these tolerances is potentially vulnerable to revocation. Furthermore, if unneeded tolerances are included in the aggregate and cumulative risk assessments, the estimated exposure to the pesticide would be inflated. Consequently, it may be more difficult for others to obtain needed tolerances or to register needed new uses. To avoid potential trade restrictions, the Agency is proposing to revoke tolerances for residues on crops uses for which FIFRA registrations no longer exist, unless someone expresses a need for such tolerances and commits to the data needed to support them. Through this proposed rule, the Agency is inviting individuals who need these import tolerances to identify themselves and the tolerances that are needed to cover imported commodities.

Parties interested in retention of the tolerances should be aware that additional data may be needed to support retention. These parties should be aware that, under FFDCA section 408(f), if the Agency determines that additional information is reasonably required to support the continuation of a tolerance, EPA may require that parties interested in maintaining the tolerances provide the necessary information. If the requisite information is not submitted, EPA may issue an order revoking the tolerance at issue.

C. When do These Actions Become Effective?

For this rule, the proposed actions will affect uses which have been canceled for many years. EPA is proposing that these actions become effective 90 days following publication of a final rule in the **Federal Register**. EPA is proposing to delay the effectiveness of these revocations for 90 days following publication of a final rule to ensure that all affected parties receive notice of EPA's actions. EPA believes that existing stocks of pesticide products labeled for the uses associated with the tolerances proposed for revocation have been exhausted. However, if EPA is presented with information that existing stocks would still be available and that information is verified, EPA will consider extending the expiration date of the tolerance. If

you have comments regarding existing stocks and whether the effective date accounts for these stocks, please submit comments as described under **SUPPLEMENTARY INFORMATION.**

Any commodities listed in this proposal treated with the pesticides subject to this proposal, and in the channels of trade following the tolerance revocations, shall be subject to FFDCA section 408(1)(5), as established by FQPA. Under this section, any residues of these pesticides in or on such food shall not render the food adulterated so long as it is shown to the satisfaction of FDA that, (1) the residue is present as the result of an application or use of the pesticide at a time and in a manner that was lawful under FIFRA, and (2) the residue does not exceed the level that was authorized at the time of the application or use to be present on the food under a tolerance or exemption from tolerance. Evidence to show that food was lawfully treated may include records that verify the dates that the pesticide was applied to such food.

D. What Is the Contribution to Tolerance Reassessment?

By law, EPA is required by August 2002 to reassess 66% or about 6,400 of the tolerances in existence on August 2, 1996. EPA is also required to assess the remaining tolerances by August, 2006. As of January 3, 2002, EPA has reassessed over 3,830 tolerances. This document proposes to revoke a total of 66 tolerances of which 62 are in 40 CFR 180.167 and 4 are in 40 CFR 180.167a. Therefore, 66 tolerance reassessments would be counted when the final rule is published toward the August, 2002 review deadline of FFDCA section 408(q), as amended by FQPA in 1996.

III. Are the Proposed Actions Consistent with International Obligations?

The tolerance revocations in this proposal are not discriminatory and are designed to ensure that both domesticallyproduced and imported foods meet the food safety standards established by the FFDCA. The same food safety standards apply to domestically produced and imported foods.

EPA is working to ensure that the U.S. tolerance reassessment program under FQPA does not disrupt international trade. EPA considers Codex Maximum Residue Limits (MRLs) in setting U.S. tolerances and in reassessing them. MRLs are established by the Codex Committee on Pesticide Residues, a committee within the Codex Alimentarius Commission, an international organization formed to promote the coordination of international food standards. It is EPA's policy to harmonize U.S. tolerances with Codex MRLs to the extent possible, provided that the MRLs achieve the level of protection required under FFDCA. EPA's effort to harmonize with Codex MRLs is summarized in the tolerance reassessment section of individual Reregistration Eligibility Decision documents. EPA has developed guidance concerning submissions for import tolerance support (65 FR 35069, June 1, 2000) (FRL–6559–3). This guidance will be made available to interested persons. Electronic copies are available on the internet at http://www.epa.gov/. On the Home Page select ''Laws and Regulations,'' then select ''Regulations and Proposed Rules'' and then look up the entry for this document under **Federal Register** Environmental Documents. You can also go directly to the **Federal Register** listings at http://www.epa.gov/fedrgstr/.

IV. Regulatory Assessment Requirements

In this proposed rule, EPA is proposing to revoke specific tolerances established under FFDCA section 408. The Office of Management and Budget (OMB) has exempted this type of action (i.e., a tolerance revocation for which extraordinary circumstances do not exist) from review under Executive Order 12866, entitled *Regulatory Planning and Review* (58 FR 51735, October 4, 1993). Because this proposed rule has been exempted from review under Executive Order 12866 due to its lack of significance, this proposed rule is not subject to Executive Order 13211, *Actions Concerning Regulations That Significantly Affect Energy Supply, Distribution, or Use* (66 FR 28355, May 22, 2001). This proposed rule does not contain any information collections subject to OMB approval under the Paperwork Reduction Act (PRA), 44 U.S.C. 3501 *et seq.*, or impose any enforceable duty or contain any unfunded mandate as described under Title II of the Unfunded Mandates Reform Act of 1995 (UMRA) (Public Law 104–4). Nor does it require any *special considerations as required by Executive Order 12898, entitled Federal Actions to Address Environmental Justice in Minority Populations and Low-Income Populations* (59 FR 7629, February 16, 1994); or OMB review or any other Agency action under Executive Order 13045, entitled *Protection of Children from Environmental Health Risks and Safety Risks* (62 FR 19885, April 23, 1997). This action does not involve any technical standards that would require Agency consideration of voluntary consensus standards pursuant to section 12(d) of the National Technology Transfer and Advancement Act of 1995 (NTTAA), Public Law 104–113, section 12(d) (15 U.S.C. 272 note). Pursuant to the Regulatory Flexibility Act (RFA) (5 U.S.C. 601 *et seq.*), the Agency previously assessed whether revocations of tolerances might significantly impact a substantial number of small entities and concluded that, as a general matter, these actions do not impose a significant economic impact on a substantial number of small entities. This analysis was published on December 17, 1997 (62 FR 66020), and was provided to the Chief Counsel for Advocacy of the Small Business Administration. Taking into account this analysis, and available information concerning the pesticides listed in this rule, I certify that this action will not have a significant economic impact on a substantial number of small entities. Specifically, as per the 1997 notice, EPA has reviewed its available data on imports and foreign pesticide usage and concludes that there is a reasonable international supply of food not treated with canceled pesticides. Furthermore, for the pesticides named in this proposed rule, the Agency knows of no extraordinary circumstances that exist as to the present proposed revocations that would change EPA's previous analysis. Any comments about the Agency's determination should be submitted to EPA along with comments on the proposal, and will be addressed prior to issuing a final rule.

In addition, the Agency has determined that this action will not have a substantial direct effect on States, on the relationship between the national government and the States, or on the distribution of power and responsibilities among the various levels of government, as specified in Executive Order 13132, entitled *Federalism* (64 FR 43255, August 10, 1999). Executive Order 13132 requires EPA to develop an accountable process to ensure ''meaningful and timely input by State and local officials in the development of regulatory policies that have federalism implications.'' ''Policies that have federalism implications'' is defined in the Executive Order to include regulations that have ''substantial direct effects on the States, on the relationship between the national government and the States, or on the distribution of power and responsibilities among the various levels of government.'' This proposed rule directly regulates growers, food

processors, food handlers and food retailers, not States. This action does not alter the relationships or distribution of power and responsibilities established by Congress in the preemption provisions of FFDCA section 408(n)(4). For these same reasons, the Agency has determined that this rule does not have any tribal implications as described in Executive Order 13175, entitled Consultation and Coordination with Indian Tribal Governments (65 FR 67249, November 6, 2000). Executive Order 13175 requires EPA to develop an accountable process to ensure meaningful and timely input by tribal officials in the development of regulatory policies that have tribal implications. Policies that have tribal implications is defined in the Executive Order to include regulations that have substantial direct effects on one or more Indian tribes, on the relationship between the Federal government and the Indian tribes, or on the distribution of power and responsibilities between the Federal government and Indian tribes. This rule will not have substantial direct effects on tribal governments, on the relationship between the Federal government and Indian tribes, or on the distribution of power and responsibilities between the Federal government and Indian tribes, as specified in Executive Order 13175. Thus, Executive Order 13175 does not apply to this rule.

List of Subjects in 40 CFR Part 180

Environmental protection, Administrative practice and procedure, Agricultural commodities,Pesticides and pests, Reporting and recordkeeping requirements.

Dated: December 20, 2001.

Marcia E. Mulkey,

Director, Office of Pesticide Programs.

Therefore, it is proposed that 40 CFR part 180 be amended as follows:

PART 180—[AMENDED]

1. The authority citation for part 180 continues to read as follows:

Authority: 21 U.S.C. 321(q), 346(a) and 371.

2. Section 180.167 is amended by removing entries from the existing paragraph and designating the existing paragraph as paragraph (a), and by adding and reserving paragraphs (b), (c), and (d), to read as follows:

§ 180.167 Nicotine-containing compounds; tolerances for residues.

(a) *General.* Tolerances are established for residues ofnicotine-containing compounds used as insecticides in or on the following raw agricultural commodities:

Commodity	Parts per million
Cucumber	2.0
Lettuce	2.0
Tomato	2.0

(b) *Section 18 emergency exemptions.* [Reserved]

(c) *Tolerances with regional registrations.* [Reserved]

(d) *Indirect or inadvertent residues.* [Reserved]

§ 180.167a [Removed]

3. Section 180.167a is removed.

[FR Doc. 02–628 Filed 1–15–02; 8:45 am]

BILLING CODE 6560–50–S

DEPARTMENT OF TRANSPORTATION

Federal Railroad Administration

49 CFR Part 241

[FRA Docket No. FRA–2001–8728, Notice No. 2]

RIN 2130–AB38

U.S. Locational Requirement for Dispatching of U.S. Rail Operations

AGENCY: Federal Railroad Administration (FRA), Department of Transportation (DOT).

ACTION: Notice of public hearing.

SUMMARY: On December 11, 2001 (66 FR 63942), FRA published an Interim Final Rule (IFR) requiring all dispatching of railroad operations that occur in the United States to be performed in the United States with three minor exceptions. FRA is interested in receiving public comments on possible benefits and costs of this IFR and comments on whether FRA should adopt an alternative regulatory scheme under which extraterritorial dispatching of United States railroad operations would be permitted and, if so, under what conditions. In the IFR, FRA announced that it would schedule a public hearing to allow interested parties the opportunity to comment on these issues. This notice announces the scheduling of the public hearing.

DATES: *Public Hearing:* The date of the public hearing is Tuesday, February 12, 2002, at 10 a.m. in Washington, DC. Any person wishing to participate in the public hearing should notify the Docket Clerk by telephone (202–493–6030) or by mail at the address provided below at least five working days prior to the date of the hearing and submit to the Docket Clerk three copies of the oral statement that he or she intends to make at the hearing. The notification should identify the party the person represents, and the particular subject(s) the person plans to address. The notification should also provide the Docket Clerk with the participant's mailing address.

ADDRESSES: (1) *Docket Clerk:* Written notification should identify the docket number and must be submitted in triplicate to Ms. Ivornette Lynch, Docket Clerk, Office of Chief Counsel, Federal Railroad Administration, RCC–10, 1120 Vermont Ave., NW., Stop 10, Washington, DC 20590.

(2) *Public Hearing:* The public hearing will be held in the Department of Transportation Headquarters Building, 400 7th Street, SW., Rooms 3200–3204, Washington, DC 20590. Attendees should bring an identification card with photograph (such as a current driver's license), report to the security counter in the southwest quadrant of the DOT building for admission, and follow security procedures as provided at that location.

FOR FURTHER INFORMATION CONTACT: Douglas Taylor, Staff Director for Operating Practices, FRA Office of Safety, RRS–11, 1120 Vermont Avenue, NW., Stop 25, Washington, DC 20590 (telephone 202–493–6255); John Winkle, Trial Attorney, FRA Office of the Chief Counsel, RCC–12, 1120 Vermont Avenue, NW., Stop 10, Washington, DC 20590 (telephone 202–493–6067); or Billie Stultz, Deputy Assistant Chief Counsel, FRA Office of Chief Counsel, RCC–12, 1120 Vermont Avenue, NW., Stop 10, Washington, DC 20590 (telephone 202–493–6053 or 202–493–6029).

Issued in Washington, DC, on January 9, 2002.

Allan Rutter,

Federal Railroad Administrator.

[FR Doc. 02–1027 Filed 1–15–02; 8:45 am]

BILLING CODE 4910–06–P

Proposed Rules

Federal Register
Vol. 67, No. 11
Wednesday, January 16, 2002

This section of the FEDERAL REGISTER contains notices to the public of the proposed issuance of rules and regulations. The purpose of these notices is to give interested persons an opportunity to participate in the rule making prior to the adoption of the final rules.

DEPARTMENT OF TRANSPORTATION

Federal Aviation Administration

14 CFR Part 39

[Docket No. 2001–SW–25–AD]

RIN 2120–AA64

Airworthiness Directives; MD Helicopters, Inc., Model MD900 Helicopters

AGENCY: Federal Aviation Administration, DOT.

ACTION: Notice of proposed rulemaking (NPRM).

SUMMARY: This document proposes adopting a new airworthiness directive (AD) for certain serial numbered MD Helicopters, Inc. (MDHI) Model MD900 helicopters. The AD would require, for the lateral-mixer bellcrank assembly (bellcrank), establishing a life limit, creating a component history card or equivalent record, determining the hours time-in-service (TIS), and applying a serial number (S/N). This proposal is prompted by additional testing, which revealed that the original load test to establish the life limits of the bellcrank did not accurately represent the actual loading. The actions specified by the proposed AD are intended to prevent fatigue failure of the bellcrank and subsequent loss of lateral control of the helicopter.

DATES: Comments must be received on or before March 18, 2002.

ADDRESSES: Submit comments in triplicate to the Federal Aviation Administration (FAA), Office of the Regional Counsel, Southwest Region, Attention: Rules Docket No. 2001–SW–25–AD, 2601 Meacham Blvd., Room 663, Fort Worth, Texas 76137. You may also send comments electronically to the Rules Docket at the following address: *9-asw-adcomments@faa.gov.* Comments may be inspected at the Office of the Regional Counsel between 9 a.m. and 3 p.m., Monday through Friday, except Federal holidays.

FOR FURTHER INFORMATION CONTACT: Jon Mowery, Aviation Safety Engineer, FAA, Los Angeles Aircraft Certification Office, Airframe Branch, 3960 Paramount Blvd., Lakewood, California 90712, telephone (562) 627–5322, fax (562) 627–5210.

SUPPLEMENTARY INFORMATION:

Comments Invited

Interested persons are invited to participate in the making of the proposed rule by submitting such written data, views, or arguments as they may desire. Communications should identify the Rules Docket number and be submitted in triplicate to the address specified above. All communications received on or before the closing date for comments will be considered before taking action on the proposed rule. The proposals contained in this document may be changed in light of the comments received.

Comments are specifically invited on the overall regulatory, economic, environmental, and energy aspects of the proposed rule. All comments submitted will be available, both before and after the closing date for comments, in the Rules Docket for examination by interested persons. A report summarizing each FAA-public contact concerned with the substance of this proposal will be filed in the Rules Docket.

Commenters wishing the FAA to acknowledge receipt of their mailed comments submitted in response to this proposal must submit a self-addressed, stamped postcard on which the following statement is made: ''Comments to Docket No. 2001–SW–25–AD.'' The postcard will be date stamped and returned to the commenter.

Availability of NPRMs

Any person may obtain a copy of this NPRM by submitting a request to the FAA, Office of the Regional Counsel, Southwest Region, Attention: Rules Docket No. 2001–SW–25–AD, 2601 Meacham Blvd., Room 663, Fort Worth, Texas 76137.

Discussion

This amendment proposes adopting a new AD for certain serial numbered MDHI Model MD900 helicopters with a bellcrank, P/N 900C2010203–105, installed that currently has an unlimited life. Additional testing has revealed that the original load test to establish the life limits of the part did not accurately represent the actual loading. Thus, we have determined that the bellcrank should have a serviceable life of 13,300 hours TIS. This creates an unsafe condition. This condition, if not corrected, could result in fatigue failure of the bellcrank and subsequent loss of lateral control of the helicopter.

This unsafe condition is likely to exist or develop on certain other helicopters of the same type design. Therefore, the proposed AD would require, before further flight, the following for the bellcrank on an affected helicopter:

- Create a component history card or equivalent record.
- Determine the hours TIS of the bellcrank.
- Apply a S/N.
- Remove any affected bellcrank that exceeds the life limit.

This AD would revise the Limitations section of the maintenance manual by establishing a life limit of 13,300 hours TIS for the bellcrank, P/N 900C2010203–105.

The FAA estimates that 30 helicopters of U.S. registry would be affected by this proposed AD, that it would take approximately ½ work hour per helicopter to accomplish the required actions for the bellcrank, and that the average labor rate is $60 per work hour. Required parts would cost approximately $10,120 per helicopter. Based on these figures, the total cost impact of the proposed AD on U.S. operators is estimated to be $304,500 assuming replacement of the bellcranks in all 30 helicopters.

The regulations proposed herein would not have a substantial direct effect on the States, on the relationship between the national Government and the States, or on the distribution of power and responsibilities among the various levels of government. Therefore, it is determined that this proposal would not have federalism implications under Executive Order 13132.

For the reasons discussed above, I certify that this proposed regulation (1) is not a ''significant regulatory action'' under Executive Order 12866; (2) is not a ''significant rule'' under the DOT Regulatory Policies and Procedures (44 FR 11034, February 26, 1979); and (3) if promulgated, will not have a significant economic impact, positive or negative, on a substantial number of small entities

under the criteria of the Regulatory Flexibility Act. A copy of the draft regulatory evaluation prepared for this action is contained in the Rules Docket. A copy of it may be obtained by contacting the Rules Docket at the location provided under the caption **ADDRESSES**.

List of Subjects in 14 CFR Part 39

Air transportation, Aircraft, Aviation safety, Safety.

The Proposed Amendment

Accordingly, pursuant to the authority delegated to me by the Administrator, the Federal Aviation Administration proposes to amend part 39 of the Federal Aviation Regulations (14 CFR part 39) as follows:

PART 39—AIRWORTHINESS DIRECTIVES

1. The authority citation for part 39 continues to read as follows:

Authority: 49 U.S.C. 106(g), 40113, 44701.

§ 39.13 [Amended]

2. Section 39.13 is amended by adding a new airworthiness directive to read as follows:

MD Helicopters, Inc.: Docket No. 2001–SW–25–AD.

Applicability: Model MD900 helicopters, Serial Number (S/N) 900–00008, 900–00010 through 900–00098, and 900–00100, with a lateral-mixer bellcrank assembly (bellcrank), part number (P/N) 900C2010203–105, installed, certificated in any category.

Note 1: This AD applies to each helicopter identified in the preceding applicability provision, regardless of whether it has been otherwise modified, altered, or repaired in the area subject to the requirements of this AD. For helicopters that have been modified, altered, or repaired so that the performance of the requirements of this AD is affected, the owner/operator must request approval for an alternative method of compliance in accordance with paragraph (e) of this AD. The request should include an assessment of the effect of the modification, alteration, or repair on the unsafe condition addressed by this AD; and if the unsafe condition has not been eliminated, the request should include specific proposed actions to address it.

Compliance: Before further flight, unless accomplished previously.

To prevent fatigue failure of the bellcrank and subsequent loss of lateral control of the helicopter, accomplish the following:

(a) Create a component history card or equivalent record for each bellcrank and record the hours time-in-service (TIS) of the bellcrank. If the hours TIS of the bellcrank cannot be determined, use the helicopter's total hours TIS as the hours TIS for the bellcrank.

(b) Apply a S/N to the bellcrank in accordance with the Accomplishment Instructions, paragraph (1)(a) and (1)(b), of MD Helicopters, Inc. Service Bulletin SB 900–084, dated December 3, 2001.

(c) Remove any bellcrank that has exceeded 13,300 hours TIS.

(d) This AD revises the Limitations section of the maintenance manual by establishing a life limit of 13,300 hours TIS for bellcrank, P/N 900C2010203–105.

(e) An alternative method of compliance or adjustment of the compliance time that provides an acceptable level of safety may be used if approved by the Manager, Los Angeles Aircraft Certification Office (LAACO), FAA. Operators shall submit their requests through an FAA Principal Maintenance Inspector, who may concur or comment and then send it to the Manager, LAACO.

Note 2: Information concerning the existence of approved alternative methods of compliance with this AD, if any, may be obtained from the LAACO.

(f) Special flight permits may be issued in accordance with 14 CFR 21.197 and 21.199 to operate the helicopter to a location where the requirements of this AD can be accomplished.

Issued in Fort Worth, Texas, on January 4, 2002.

David A. Downey,

Manager, Rotorcraft Directorate, Aircraft Certification Service.

[FR Doc. 02–1058 Filed 1–15–02; 8:45 am]

BILLING CODE 4910–13–P

DEPARTMENT OF TRANSPORTATION

Federal Aviation Administration

14 CFR Part 39

[Docket No. 2001–SW–54–AD]

RIN 2120–AA64

Airworthiness Directives; Bell Helicopter Textron Canada Model 407 Helicopters

AGENCY: Federal Aviation Administration, DOT.

ACTION: Notice of proposed rulemaking (NPRM).

SUMMARY: This document proposes adopting a new airworthiness directive (AD) for Bell Helicopter Textron Canada (BHTC) Model 407 helicopters. This proposal would require visually inspecting the forward hanger bearing bracket (bracket). This proposal is prompted by reports of cracks in the bracket. The actions specified by this proposed AD are intended to detect a crack in the bracket, to prevent loss of tail rotor drive or tail rotor control and subsequent loss of control of the helicopter.

DATES: Comments must be received on or before March 18, 2002.

ADDRESSES: Submit comments in triplicate to the Federal Aviation Administration (FAA), Office of the Regional Counsel, Southwest Region, Attention: Rules Docket No. 2001–SW–54–AD, 2601 Meacham Blvd., Room 663, Fort Worth, Texas 76137. You may also send comments electronically to the Rules Docket at the following address: *9-asw-adcomments@faa.gov.* Comments may be inspected at the Office of the Regional Counsel between 9 a.m. and 3 p.m., Monday through Friday, except Federal holidays.

FOR FURTHER INFORMATION CONTACT: Sharon Miles, Aviation Safety Engineer, FAA, Rotorcraft Directorate, Regulations Group, Fort Worth, Texas 76193–0111, telephone (817) 222–5122, fax (817) 222–5961.

SUPPLEMENTARY INFORMATION:

Comments Invited

Interested persons are invited to participate in the making of the proposed rule by submitting such written data, views, or arguments as they may desire. Communications should identify the Rules Docket number and be submitted in triplicate to the address specified under the caption **ADDRESSES**. All communications received on or before the closing date for comments will be considered before taking action on the proposed rule. The proposals contained in this document may be changed in light of the comments received.

Comments are specifically invited on the overall regulatory, economic, environmental, and energy aspects of the proposed rule. All comments submitted will be available, both before and after the closing date for comments, in the Rules Docket for examination by interested persons. A report summarizing each FAA-public contact concerned with the substance of this proposal will be filed in the Rules Docket.

Commenters wishing the FAA to acknowledge receipt of their mailed comments submitted in response to this proposal must submit a self-addressed, stamped postcard on which the following statement is made: ''Comments to Docket No. 2001–SW–54–AD.'' The postcard will be date stamped and returned to the commenter.

Availability of NPRMs

Any person may obtain a copy of this NPRM by submitting a request to the FAA, Office of the Regional Counsel, Southwest Region, Attention: Rules Docket No. 2001–SW–54–AD, 2601 Meacham Blvd., Room 663, Fort Worth, Texas 76137.

Discussion

Transport Canada, the airworthiness authority for Canada, notified the FAA that an unsafe condition may exist on BHTC Model 407 helicopters. Transport Canada advises of reports of cracks in certain brackets.

BHTC has issued Alert Service Bulletin No. 407–01–39, Revision A, dated May 30, 2001 (ASB). That ASB specifies initial and repetitive inspections for a crack in bracket, part number (P/N) 407–040–321–101 and –103, for helicopters, serial number 53000 through 53442 with flywheel, P/N 407–040–316–101, installed. Transport Canada classified this ASB as mandatory and issued AD No. CF–2001–32, dated August 13, 2001, to ensure the continued airworthiness of these helicopters in Canada.

This helicopter model is manufactured in Canada and is type certificated for operation in the United States under the provisions of 14 CFR 21.29 and the applicable bilateral agreement. Pursuant to the applicable bilateral agreement, Transport Canada has kept the FAA informed of the situation described above. The FAA has examined the findings of Transport Canada, reviewed all available information, and determined that AD action is necessary for products of this type design that are certificated for operation in the United States.

This unsafe condition is likely to exist or develop on other helicopter models of the same type design registered in the United States. Therefore, the proposed AD would require initial and repetitive visual inspections for a crack in certain brackets and if a crack is found, removing the bracket before further flight.

The FAA estimates that 442 helicopters of U.S. registry would be affected by this proposed AD, that it would take approximately 1/4 work hour per helicopter to accomplish the proposed actions, and that the average labor rate is $60 per work hour. Based on these figures, the total cost impact of the proposed AD on U.S. operators is estimated to be $6630 assuming no crack is detected in a bracket.

The regulations proposed herein would not have a substantial direct effect on the States, on the relationship between the national Government and the States, or on the distribution of power and responsibilities among the various levels of government. Therefore, it is determined that this proposal would not have federalism implications under Executive Order 13132.

For the reasons discussed above, I certify that this proposed regulation (1) is not a ''significant regulatory action'' under Executive Order 12866; (2) is not a ''significant rule'' under the DOT Regulatory Policies and Procedures (44 FR 11034, February 26, 1979); and (3) if promulgated, will not have a significant economic impact, positive or negative, on a substantial number of small entities under the criteria of the Regulatory Flexibility Act. A copy of the draft regulatory evaluation prepared for this action is contained in the Rules Docket. A copy of it may be obtained by contacting the Rules Docket at the location provided under the caption **ADDRESSES.**

List of Subjects in 14 CFR Part 39

Air transportation, Aircraft, Aviation safety, Safety.

The Proposed Amendment

Accordingly, pursuant to the authority delegated to me by the Administrator, the Federal Aviation Administration proposes to amend part 39 of the Federal Aviation Regulations (14 CFR part 39) as follows:

PART 39—AIRWORTHINESS DIRECTIVES

1. The authority citation for part 39 continues to read as follows:

Authority: 49 U.S.C. 106(g), 40113, 44701.

§ 39.13 [Amended]

2. Section 39.13 is amended by adding a new airworthiness directive to read as follows:

Bell Helicopter Textron Canada: Docket No. 2001–SW–54–AD.

Applicability: Model 407 helicopters, serial number 53000 through 53442, with flywheel, part number (P/N) 407–040–316–101, installed, certificated in any category.

Note 1: This AD applies to each helicopter identified in the preceding applicability provision, regardless of whether it has been otherwise modified, altered, or repaired in the area subject to the requirements of this AD. For helicopters that have been modified, altered, or repaired so that the performance of the requirements of this AD is affected, the owner/operator must request approval for an alternative method of compliance in accordance with paragraph (b) of this AD. The request should include an assessment of the effect of the modification, alteration, or repair on the unsafe condition addressed by this AD; and if the unsafe condition has not been eliminated, the request should include specific proposed actions to address it.

Compliance: Required as indicated, unless accomplished previously.

To detect a crack in the forward bearing hanger bracket (bracket) and to prevent loss of tail rotor drive or tail rotor control and subsequent loss of control of the helicopter, accomplish the following:

(a) Within 25 hours time-in-service (TIS) and thereafter at intervals not to exceed 25 hours TIS, visually inspect each bracket, P/N 407–040–321–101 or –103, for a crack in the shaded area shown in Figure 1 of this AD. Remove any cracked bracket from service.

Note 2: Dismantling of the bearing hanger and the support is not required to accomplish the requirements of this AD.

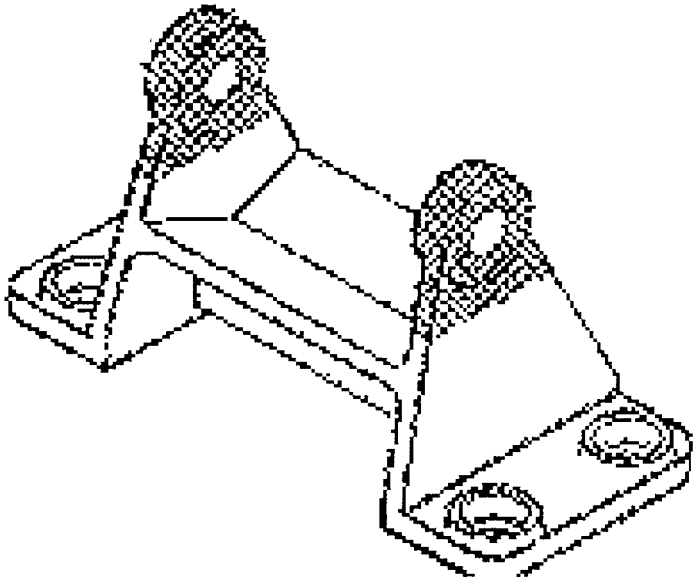

Bracket P/N 407-040-321-101/-103

Figure 1

Note 3: Bell Helicopter Textron Canada Alert Service Bulletin No. 407–01–39, Revision A, dated May 30, 2001, pertains to the subject of this AD.

(b) An alternative method of compliance or adjustment of the compliance time that provides an acceptable level of safety may be used if approved by the Manager, Regulations Group, Rotorcraft Directorate, FAA. Operators shall submit their requests through an FAA Principal Maintenance Inspector, who may concur or comment and then send it to the Manager, Regulations Group.

Note 4: Information concerning the existence of approved alternative methods of compliance with this AD, if any, may be obtained from the Regulations Group.

(c) Special flight permits may be issued in accordance with 14 CFR 21.197 and 21.199 to operate the helicopter to a location where the requirements of this AD can be accomplished.

Note 5: The subject of this AD is addressed in Transport Canada (Canada) AD No. CF–2001–32, dated August 13, 2001.

Issued in Fort Worth, Texas, on January 4, 2002.

David A. Downey,

Manager, Rotorcraft Directorate, Aircraft Certification Service.

[FR Doc. 02–1057 Filed 1–15–02; 8:45 am]

BILLING CODE 4910–13–P

DEPARTMENT OF TRANSPORTATION

Federal Aviation Administration

14 CFR Part 71

[Airspace Docket No. 01–AGL–03]

Proposed Modification of Class E Airspace; Lake Geneva, WI

AGENCY: Federal Aviation Administration (FAA), DOT.

ACTION: Notice of proposed rulemaking.

SUMMARY: This action proposes to modify Class E airspace at Lake Geneva, WI. An Area Navigation (RNAV) Standard Instrument Approach Procedure (SIAP) to Runway 23 has been developed for Grand Geneva Resort Airport. Controlled airspace extending upward from 700 feet or more above the surface of the earth is needed to contain aircraft executing these approaches. This action would increase the radius of the existing controlled airspace for Grand Geneva Resort Airport.

DATES: Comments must be received on or before February 17, 2002.

ADDRESSES: Send comments on the proposal in triplicate to: Federal Aviation Administration, Office of the Regional Counsel, AGL–7, Rules Docket No. 01–AGL–03, 2300 East Devon Avenue, Des Plaines, Illinois 60018.

The official docket may be examined in the Office of the Regional Counsel, Federal Aviation Administration, 2300 East Devon Avenue, Des Plaines, Illinois. An informal docket may also be examined during normal business hours at the Air Traffic Division, Airspace Branch, Federal Aviation Administration, 2300 East Devon Avenue, Des Plaines, Illinois.

FOR FURTHER INFORMATION CONTACT: Denis C. Burke, Air Traffic Division, Airspace Branch, AGL–520, Federal Aviation Administration, 2300 East Devon Avenue, Des Plaines, Illinois 60018, telephone (847) 294–7568.

SUPPLEMENTARY INFORMATION:

Comment Invited

Interested parties are invited to participate in this proposed rulemaking by submitting such written data, views, or agruments as they may desire. Comments that provide the factual basis supporting the views and suggestions presented are particularly helpful in developing reasoned regulatory decisions on the proposal. Comments are specifically invited on the overall regulatory, aeronautical, economic, environmental, and energy-related aspects of the proposal. Communications should identify the airspace docket number and be submitted in triplicate to the address listed above. Commenters wishing the FAA to acknowledge receipt of their comments on this action must submit with those comments a self-addressed, stamped postcard on which the following statement is made:

''Comments to Airspace Docket No. 01–AGL–03.'' The postcard will be date/time stamped and returned to the commenter. All communications received on or before the specified closing date for comments will be considered before taking action on the proposed rule. The proposal contained in this action may be changed in light of comments received. All comments submitted will be available for examination in the Rules Docket, FAA, Great Lakes Region, Office of the Regional Counsel, 2300 East Devon Avenue, Des Plaines, Illinois, both before and after the closing date for comments. A report summarizing each substantive public contact with FAA personnel concerned with this rulemaking will be filed in the docket.

Availability of NPRM's

Any person may obtain a copy of this Notice of Proposed Rulemaking (NPRM) by submitting a request to the Federal Aviation Administration, Office of Public Affairs, Attention: Public Inquiry Center, APA–230, 800 Independence Avenue, SW, Washington, DC 20591, or by calling (202) 267–3484. Communications must identify the docket number of this NPRM. Persons interested in being placed on a mailing list for future NPRM's should also request a copy of Advisory Circular No. 11–2A, which describes the application procedure.

The Proposal

The FAA is considering an amendment to 14 CFR part 71 to modify Class E airspace at Lake Geneva, WI, by increasing the radius of the controlled airspace for Grand Geneva Resort Airport. Controlled airspace extending upward from 700 feet or more above the surface of the earth is needed to contain aircraft executing instrument approach procedures. The area would be depicted on appropriate aeronautical charts. Class E airspace areas extending upward from 700 feet or more above the surface of the earth are published in paragraph 6005 of FAA Order 7400.9J dated August 31, 2001, and effective September 16, 2001, which is incorporated by reference in 14 CFR 71.1. The Class E designations listed in this document would be published subsequently in the Order.

The FAA has determined that this proposed regulation only involves an establishment body of technical regulations for which frequent and routine amendments are necessary to keep them operationally current. Therefore this, proposed regulation—(1) is not a ''significant regulatory action'' under Executive Order 12866; (2) is not a ''signficant rule'' under DOT Regulatory Policies and Procedures (44 FR 11034; February 26, 1979); and (3) does not warrant preparation of a Regulatory Evaluation as the anticipated impact is so minimal. Since this is a routine matter that will only affect air traffic procedures and air navigation, it is certified that this proposed rule will not have a significant economic impact on a substantial number of small entities under the criteria of the Regulatory Flexibility Act.

List of Subjects in 14 CFR Part 71

Airspace, Incorporation by reference, Navigation (air).

The Proposed Amendment

Accordingly, pursuant to the authority delegated to me, the Federal Aviation Administration proposes to amend 14 CFR part 71 as follows:

PART 71—DESIGNATION OF CLASS A, CLASS B, CLASS C, CLASS D, AND CLASS E AIRSPACE AREAS, AIRWAYS; ROUTES; AND REPORTING POINTS

1. The authority citation for part 71 continues to read as follows:

Authority: 49 U.S.C. 106(g), 40103, 40113, 40120; E.O. 10854, 24 FR 9565, 3 CFR, 1959–1963 Comp., p. 389.

§ 71.1 [Amended]

2. The incorporation by reference in 14 CFR 71.1 of the Federal Aviation Administratiaon Order 7400.9J, Airspace Designations and Reporting Points, dated August 31, 2001, and effective September 16, 2001, is amended as follows:

* * * * *

Paragraph 6005 Class E airspace areas extending upward from 700 feet or more above the surface of the earth.

* * * * *

AGL WI ES Lake Geneva, WI [REVISED]

Grand Geneva Resort Airport, WI
(Lat. 42°36′53″ N., long, 88°23′22″ W.)

That airspace extending upward from 700 feet above the surface within a 8.4-mile radius of the Grand Geneva Resort Airport, excluding that airspace within the Chicago, IL, Burlington, WI, Delevan, WI, and East Troy, WI, Class E airspace area.

* * * * *

Issued in Des Plaines, Illinois, on December 5, 2001.

Nancy B. Shelton,

Manager, Air Traffic Division, Great Lakes Region.

[FR Doc. 02–1014 Filed 1–15–02; 8:45 am]

BILLING CODE 4910–13–M

DEPARTMENT OF TRANSPORTATION

Federal Aviation Administration

14 CFR Part 71

[Airspace Docket No. 01–AGL–04]

Proposed Modification of Class E Airspace; Winona, MN

AGENCY: Federal Aviation Administration (FAA), DOT.

ACTION: Notice of proposed rulemaking.

SUMMARY: This action proposes to modify Class E airspace at Winona, MN. An Area Navigation (RNAV) Standard Instrument Approach Procedure (SIAP) to Runway 29 has been developed for Winona Municipal-Max Conrad Airport. Controlled airspace extending upward from 700 feet or more above the surface of the earth is needed to contain aircraft executing these approaches. This action would increase the radius of the existing controlled airspace for Winona Municipal-Max Airport.

DATES: Comments must be received on or before February 17, 2002.

ADDRESSES: Send comments on the proposal in triplicate to: Federal Aviation Administration, Office of the Regional Counsel, AGL–7, Rules Docket No. 01–AGL–04, 2300 East Devon Avenue, Des Plaines, Illinois 60018.

The official docket may be examined in the Office of the Regional Counsel, Federal Aviation Administration, 2300 East Devon Avenue, Des Plaines, Illinois. An informal docket may also be examined during normal business hours at the Air Traffic Division, Airspace Branch, Federal Aviation Administration, 2300 East Devon Avenue, Des Plaines, Illinois.

FOR FURTHER INFORMATION CONTACT: Denis C. Burke, Air Traffic Division, Airspace Branch, AGL–520, Federal Aviation Administration, 2300 East Devon Avenue, Des Plaines, Illinois 60018, telephone (847) 294–7568.

SUPPLEMENTARY INFORMATION:

Comments Invited

Interested parties are invited to participate in this proposed rulemaking by submitting such written data, views, or arguments as they may desire. Comments that provide the factual basis supporting the views and suggestions presented are particularly helpful in developing reasoned regulatory decisions on the proposal. Comments are specifically invited on the overall regulatory, aeronautical, economic, environmental, and energy-related aspects of the proposal. Communications should identify the

airspace docket number and be submitted in triplicate to the address listed above. Commenters wishing the FAA to acknowledge receipt of their comments on this action must submit with those comments a self-addressed, stamped postcard on which the following statement is made: ''Comments to Airspace Docket No. 01–AGL–04.'' The postcard will be date/time stamped and returned to the commenter. All communications received on or before the specified closing date for comments will be considered before taking action on the proposed rule. The proposal contained in this action may be changed in light of comments received. All comments submitted will be available for examination in the Rules Docket, FAA, Great Lakes Region, Office of the Regional Counsel, 2300 East Devon Avenue, Des Plaines, Illinois, both before and after the closing date for comments. A report summarizing each substantive public contact with FAA personnel concerned with this rulemaking will be filed in the docket.

Availability of NPRM's

Any person may obtain a copy of this Notice of Proposed Rulemaking (NPRM) by submitting a request to the Federal Aviation Administration, Office of Public Affairs, Attention: Public Inquiry Center, APA–230, 800 Independence Avenue, S.W., Washington, DC 20591, or by calling (202) 267–3484. Communications must identify the docket number of this NPRM. Persons interested in being placed on a mailing list for future NPRM's should also request a copy of Advisory Circular No. 11–2A, which describes the application procedure.

The Proposal

The FAA is considering an amendment to 14 CFR part 71 to modify Class E airspace at Winona, MN, for Winona Municipal-Max Conrad Airport. Controlled airspace extending upward from 700 feet or more above the surface of the earth is needed to contain aircraft executing instrument approach procedures. The area would be depicted on appropriate aeronautical charts. Class E airspace areas extending upward from 700 feet or more above the surface of the earth are published in paragraph 6005 of FAA Order 7400.9J dated August 31, 2001, and effective September 16, 2001, which is incorporated by reference in 14 CFR 71.1. The Class E designations listed in this document would be published subsequently in the Order.

The FAA has determined that this proposed regulation only involves an establishment body of technical regulations for which frequent and route amendments are necessary to keep them operationally current. Therefore this proposed regulation—(1) is not a ''significant regulatory action'' under Executive Order 12866; (2) is not a ''significant rule'' under DOT Regulatory Policies and Procedures (44 FR 11034; February 26, 1979); and (3) does not warrant preparation of a Regulatory Evaluation as the anticipated impact is so minimal. since this is a routing matter that will only affect air traffic procedures and air navigation, it is certified that this proposed rule will not have a significant economic impact on a substantial number of small entities under the criteria of the Regulatory Flexibility Act.

List of Subjects in 14 CFR Part 71

Airspace, Incorporation by reference, Navigation (air).

The Proposed Amendment

Accordingly, pursuant to the authority delegated to me, the Federal Aviation Administration proposes to amend 14 CFR part 71 as follows:

PART 71—DESIGNATION OF CLASS A, CLASS B, CLASS C, CLASS D, AND CLASS E AIRSPACE AREAS; AIRWAYS; ROUTES; AND REPORTING POINTS

1. The authority citation for part 71 continues to read as follows:

Authority: 49 U.S.C. 106(g), 40103, 40113, 40120; E.O. 10854, 24 FR 9565, 3 CFR, 1959–1963 Comp., p. 389.

§ 71.1 [Amended]

2. The incorporation by reference in 14 CFR 71.1 of the Federal Aviation Administration Order 7400.9J, Airspace Designations and Reporting Points, dated August 31, 2001, and effective September 16, 2001, is amended as follows:

* * * * *

Paragraph 6005 Class E airspace areas extending upward from 700 feet or more above the surface of the earth.

* * * * *

AGL MN E5 Winona, MN [REVISED]

Winona Municipal-Max Conrad Field, MN
(Lat. 44°04′38″ N., long. 91°42′30″ W.)

That airspace extending upward from 700 feet above the surface within a 7-mile radius of the Winona Municipal-Max Conrad Field, and within 2 miles each side of the 108° bearing extending from the 7 mile radius to 9.5 miles southeast of the airport excluding that airspace within the LaCrosse WI, class E airspace area.

* * * * *

Issued in Des Plaines, Illinois, on December 5, 2001.

Nancy B. Shelton,

Manager, Air Traffic Division, Great Lakes Region.

[FR Doc. 02–1013 Filed 1–15–02; 8:45 am]

BILLING CODE 4910–13–M

DEPARTMENT OF TRANSPORTATION

Federal Aviation Administration

14 CFR Part 71

[Airspace Docket No. 01–AGL–07]

Proposed Modification of Class E Airspace; Brainerd, MN

AGENCY: Federal Aviation Administration (FAA), DOT.

ACTION: Notice of proposed rulemaking.

SUMMARY: This action proposes to modify Class E airspace at Brainerd, MN. An Area Navigation (RNAV) Standard Instrument Approach Procedure (SIAP) to Runway (Rwy) 05 has been developed for Brainerd-Crow Wing County Regional Airport. Controlled airspace extending upward from 700 feet or more above the surface of the earth is needed to contain aircraft executing this approach. This action would increase the radius of the existing controlled airspace for Brainerd-Crow Wing County Region Airport.

DATES: Comments must be received on or before February 17, 2002.

ADDRESSES: Send comments on the proposal in triplicate to: Federal Aviation Administration, Office of the Regional Counsel, AGL–7, Rules Docket No. 01–AGL–07, 2300 East Devon Avenue, Des Plaines, Illinois 60018.

The official docket may be examined in the Office of the Regional Counsel, Federal Aviation Administration, 2300 East Devon Avenue, Des Plaines, Illinois. An informal docket may also be examined during normal business hours at the Air Traffic Division, Airspace Branch, Federal Aviation Administration, 2300 East Devon Avenue, Des Plaines, Illinois.

FOR FURTHER INFORMATION CONTACT: Denis C. Burke, Air Traffic Division, Airspace Branch, AGL–520, Federal Aviation Administration, 2300 East Devon Avenue, Des Plaines, Illinois 60018, telephone (847) 294–7568.

SUPPLEMENTARY INFORMATION:

Comments Invited

Interested parties are invited to participate in this proposed rulemaking by submitting such written data, views, or arguments as they may desire.

Comments that provide the factual basis supporting the views and suggestions presented are particularly helpful in developing reasoned regulatory decisions on the proposal. Comments are specifically invited on the overall regulatory, aeronautical, economic, environmental, and energy-related aspects of the proposal. Communications should identify the airspace docket number and be submitted in triplicate to the address listed above. Commenters wishing the FAA to acknowledge receipt of their comments on this action must submit with those comments a self-addressed, stamped postcard on which the following statement is made: ''Comments to Airspace Docket No. 01–AGL–07.'' The postcard will be date/time stamped and returned to the commenter. All communications received on or before the specified closing date for comments will be considered before taking action on the proposed rule. The proposal contained in this action may be changed in light of comments received. All comments submitted will be available for examination in the Rules Docket, FAA, Great Lakes Region, Office of the Regional Counsel, 2300 East Devon Avenue, Des Plaines, Illinois, both before and after the closing date for comments. A report summarizing each substantive public contact with FAA personnel concerned with this rulemaking will be filed in the docket.

Availability of NPRM's

Any person may obtain a copy of this Notice of Proposed Rulemaking (NPRM) by submitting a request to the Federal Aviation Administration, Office of Public Affairs, Attention: Public Inquiry Center, APA–230, 800 Independence Avenue, SW., Washington, DC 20591, or by calling (202) 267–3484. Communications must identify the docket number of this NPRM. Persons interested in being placed on a mailing list for future NPRM's should also request a copy of Advisory Circular No. 11–2A, which describes the application procedure.

The Proposal

The FAA is considering an amendment to 14 CFR part 71 to modify Class E airspace at Brainerd, MN, by increasing the radius of the controlled airspace for Brainerd-Crow Wing County Regional Airport. Controlled airspace extending upward from 700 feet or more above the surface of the earth is needed to contain aircraft executing instrument approach procedures. The area would be depicted on appropriate aeronautical charts. Class E airspace areas extending upward from 700 feet or more above the surface of the earth are published in paragraph 6005 of FAA Order 7400.9J dated August 31, 2001, and effective September 16, 2001, which is incorporated by reference in 14 CFR 71.1. The Class E designations listed in this document would be published subsequently in the Order.

The FAA has determined that this proposed regulation only involves an establishment body of technical regulations for which frequent and routine amendments are necessary to keep them operationally current. Therefore this, proposed regulation—(1) is not a ''significant regulatory action'' under Executive Order 12866; (2) is not a ''significant rule'' under DOT Regulatory Policies and Procedures (44 FR 11034; February 26, 1979); and (3) does not warrant preparation of a Regulatory Evaluation as the anticipated impact is so minimal. Since this is a routine matter that will only affect air traffic procedures and air navigation, it is certified that this proposed rule will not have a significant economic impact on a substantial number of small entities under the criteria of the Regulatory Flexibility Act.

List of Subjects in 14 CFR Part 71

Airspace, Incorporation by reference, Navigation (air).

The Proposed Amendment

Accordingly, pursuant to the authority delegated to me, the Federal Aviation Administration proposes to amend 14 CFR part 71 as follows:

PART 71—DESIGNATION OF CLASS A, CLASS B, CLASS C, CLASS D, AND CLASS E AIRSPACE AREAS; AIRWAYS; ROUTES; AND REPORTING POINTS

1. The authority citation for part 71 continues to read as follows:

Authority: 49 U.S.C. 106(g), 40103, 40113, 40120; E.O. 10854, 24 FR 9565, 3 CFR, 1959–1963 Comp., p. 389.

§ 71.1 [Amended]

2. The incorporation by reference in 14 CFR 71.1 of the Federal Aviation Administration Order 7400.9J, Airspace Designations and Reporting Points, dated August 31, 2001, and effective September 16, 2001, is amended as follows:

* * * * *

Paragraph 6005 Class E airspace areas extending upward from 700 feet or more above the surface of the earth.

* * * * *

AGL WI E5 Brainerd, MN [Revised]

Brainerd-Crow Wing County Regional Airport, MN
(Lat. 46° 23′ 52″N., long. 94° 08′ 14″W.)

That airspace extending upward from 700 feet above the surface within 7.9-mile radius of the Brainerd-Crow Wing County Regional Airport, Brainerd, MN.

* * * * *

Issued in Des Plaines, Illinois, on December 5, 2001.

Nancy B. Shelton,

Manager, Air Traffic Division, Great Lakes Region.

[FR Doc. 02–1010 Filed 1–15–02; 8:45 am]

BILLING CODE 4910–13–M

DEPARTMENT OF TRANSPORTATION

Federal Aviation Administration

14 CFR Part 71

[Airspace Docket No. 01–AGL–09]

Proposed Modification of Class E Airspace; Green Bay, WI

AGENCY: Federal Aviation Administration (FAA), DOT.

ACTION: Notice of proposed rulemaking.

SUMMARY: This action proposes to modify Class E airspace at Green Bay, WI. An Area Navigation (RNAV) Standard Instrument Approach procedure (SIAP) to Runway (Rwy) 06, an RNAV SIAP Rwy 18, an RNAV SIAP Rwy 24, and an RNAV SIAP Rwy 36 has been developed for Austin-Straubel International Airport. Controlled airspace extending upward from 700 feet or more above the surface of the earth is needed to contain aircraft executing this approach. This action would add an extension for Austin-Straubel International Airport.

DATES: Comments must be received on or before February 17, 2002.

ADDRESSES: Send comments on the proposal in triplicate to: Federal Aviation Administration, Office of the Regional Counsel, AGL–7, Rules Docket No. 01–AG–09, 2300 East Devon Avenue, Des Plaines, Illinois 60018. The official docket may be examined in the Office of the Regional Counsel, Federal Aviation Administration, 2300 East Devon Avenue, Des Plaines, Illinois. An informal docket may also be examined during normal business hours at the Air Traffic Division, Airspace Branch, Federal Aviation Administration, 2300 East Devon Avenue, Des Plaines, Illinois.

FOR FURTHER INFORMATION CONTACT: Denis C. Burke, Air Traffic Division, Airspace Branch, AGL–520, Federal

Aviation Administration, 2300 East Devon Avenue, Des Plaines, Illinois 60018, telephone (847) 294–7568.

SUPPLEMENTARY INFORMATION:

Comments Invited

Interested parties are invited to participate in this proposed rulemaking by submitting such written data, views, or arguments as they may desire. Comments that provide the factual basis supporting the views and suggestions presented are particularly helpful in developing reasoned regulatory decisions on the proposal. Comments are specifically invited on the overall regulatory, aeronautical, economic, environmental, and energy-related aspects of the proposal. Communications should identify the airspace docket number and be submitted in triplicate to the address listed above. Commenters wishing the FAA to acknowledge receipt of their comments on this action must submit with those comments a self-addressed, stamped postcard on which the following statement is made: ''Comments to Airspace Docket No. 01–AGL–09.'' The postcard will be date/time stamped and returned to the commenter. All communications received on or before the specified closing date for comments will be considered before taking action on the proposed rule. The proposal contained in this action may be changed in light of comments received. All comments submitted will be available for examination in the Rules Docket, FAA, Great Lakes Region, Office of the Regional Counsel, 2300 east Devon Avenue, Des Plaines, Illinois, both before and after the closing date for comments. A report summarizing each substantive public contact with FAA personnel concerned with this rulemaking will be filed in the docket.

Availability of NPRM's

Any person may obtain a copy of this Notice of Proposed Rulemaking (NPRM) by submitting a request to the Federal Aviation Administration, Office of Public Affairs, Attention: Public Inquiry Center, APA–230, 800 Independence Avenue, SW., Washington, DC 20591, or by calling (202) 267–3484. Communications must identify the docket number of this NPRM. Persons interested in being placed on a mailing list for future NPRM's should also request a copy of Advisory Circular No. 11–2A, which describes the application procedure.

The Proposal

The FAA is considering an amendment to 14 CFR part 71 to modify Class E airspace at Green Bay, WI, by adding an extension of the controlled airspace for Austin-Straubel International Airport. Controlled airspace extending upward from 700 feet or more above the surface of the earth is needed to contain aircraft executing instrument approach procedures. The area would be depicted on appropriate aeronautical charts. Class E airspace areas extending upward from 700 feet or more above the surface of the earth are published in paragraph 6005 of FAA Order 7400.9J dated August 31, 2001, and effective September 16, 2001, which is incorporated by reference in 14 CFR 71.1. The Class E designations listed in this document would be published subsequently in the Order.

The FAA has determined that this proposed regulation only involves an establishment body of technical regulations for which frequent and routine amendments are necessary to keep them operationally current. Therefore this, proposed regulation—(1) is not a ''significant regulatory action'' under Executive Order 12866; (2) is not a ''significant rule'' under DOT Regulatory Policies and Procedures (44 FR 11034; February 26, 1979); and (3) does not warrant preparation of a Regulatory Evaluation as the anticipated impact is so minimal. Since this is a routine matter that will only affect air traffic procedures and air navigation, it is certified that this proposed rule will not have a significant economic impact on a substantial number of small entities under the criteria of the Regulatory Flexibility Act.

List of Subjects in 14 CFR Part 71

Airspace, Incorporation by reference, Navigation (air).

The Proposed Amendment

Accordingly, pursuant to the authority delegated to me, the Federal Aviation Administration proposes to amend 14 CFR part 71 as follows:

PART 71—DESIGNATION OF CLASS A, CLASS B, CLASS C, CLASS D, AND CLASS E AIRSPACE AREAS; AIRWAYS; ROUTES; AND REPORTING POINTS

1. The authority citation for part 71 continues to read as follows:

Authority: 49 U.S.C. 106(g), 40103, 40113, 40120, E.O. 10854, 24 FR 9565, 3 CFR, 1959–1963 Comp., p. 389.

§ 71.1 [Amended]

2. The incorporation by reference in 14 CFR 71.1 of the Federal Aviation Administration Order 7400.9J, Airspace Designations and Reporting Points, dated August 31, 2001, and effective September 16, 2001, is amended as follows:

* * * * *

Paragraph 6005 Class E airspace areas extending upward from 700 feet or more above the surface of the earth.

* * * * *

AGL WI E5 Green Bay, WI [REVISED]

Green Bay, Austin-Straubel International Airport, WI
(Lat. 44°29′06″N., long. 88°97′47″W.)

That airspace extending upward from 700 feet above the surface within 6.9 mile radius of the Austin-Straubel International Airport and within 2 miles each side of the 180° bearing from the Airport extending from the 6.9 mile radius to 12 miles south of the Airport.

* * * * *

Issued in Des Plaines, Illinois, on December 5, 2001.

Nancy B. Shelton,

Manager, Air Traffic Division, Great Lakes Region.

[FR Doc. 02–1009 Filed 1–15–02; 8:45 am]

BILLING CODE 4910–13–M

DEPARTMENT OF TRANSPORTATION

Federal Aviation Administration

14 CFR Part 71

[Airspace Docket No. 01–AGL–10]

Proposed Modification of Class D Airspace; Mosinee, WI; and Modification of Class E Airspace; Mosinee, WI

AGENCY: Federal Aviation Administration (FAA), DOT.

ACTION: Notice of proposed rulemaking.

SUMMARY: This action proposes to modify Class D airspace at Mosinee, WI, and modify Class E airspace at Mosinee, WI. An Area Navigation (RNAV) Standard Instrument Approach Procedure (SIAP) to Runway (Rwy) 08, an RNAV SIAP to Rwy 17, an RNAV SIAP to Rwy 26, and an RNAV SIAP to Rwy 35 have been developed for Central Wisconsin Airport. Controlled airspace extending upward from the surface of the earth is needed to contain aircraft executing this approach. This action would increase the radius of the existing Class D and Class E airspace for Central Wisconsin Airport.

DATES: Comments must be received on or before February 17, 2002.

ADDRESSES: Send comments on the proposal in triplicate to: Federal Aviation Administration, Office of the Regional Counsel, AGL–7, Rules Docket

No. 01–AGL–10, 2300 East Devon Avenue, Des Plaines, Illinois 60018.

The official docket may be examined in the Office of the Regional Counsel, Federal Aviation Administration, 2300 East Devon Avenue, Des Plaines, Illinois. An informal docket may also be examined during normal business hours at the Air Traffic Division, Airspace Branch, Federal Aviation Administration, 2300 East Devon Avenue, Des Plaines, Illinois.

FOR FURTHER INFORMATION CONTACT: Denis C. Burke, Air Traffic Division, Airspace Branch, AGL–520, Federal Aviation Administration, 2300 East Devon Avenue, Des Plaines, Illinois 60018, telephone (847) 294–7568.

SUPPLEMENTARY INFORMATION:

Comments Invited

Interested parties are invited to participate in this proposed rulemaking by submitting such written data, views, or arguments as they may desire. Comments that provide the factual basis supporting the views and suggestions presented are particularly helpful in developing reasoned regulatory decisions on the proposal. Comments are specifically invited on the overall regulatory, aeronautical, economic, environmental, and energy-related aspects of the proposal. Communications should identify the airspace docket number and be submitted in triplicate to the address listed above. Commenters wishing the FAA to acknowledge receipt of their comments on this action must submit with those comments a self-addressed, stamped postcard on which the following statement is made: ''Comments to Airspace Docket No. 01–AGL–10.'' The postcard will be date/time stamped and returned to the commenter. All communications received on or before the specified closing date for comments will be considered before taking action on the proposed rule. The proposal contained in this action may be changed in light of comments received. All comments submitted will be available for examination in the Rules Docket, FAA, Great Lakes Region, Office of the Regional Counsel, 2300 East Devon Avenue, Des Plaines, Illinois, both before and after the closing date for comments. A report summarizing each substantive public contact with FAA personnel concerned with this rulemaking will be filed in the docket.

Availability of NPRM's

Any person may obtain a copy of this Notice of Proposed Rulemaking (NPRM) by submitting a request to the Federal Aviation Administration, Office of Public Affairs, Attention: Public Inquiry Center, APA–230, 800 Independence Avenue, SW., Washington, DC 20591; or by calling (202) 267–3484. Communications must identify the docket number of this NPRM. Persons interested in being placed on a mailing list for future NPRM's should also request a copy of Advisory Circular No. 11–2A, which describes the application procedure.

The Proposal

The FAA is considering an amendment to 14 CFR part 71 to modify Class D airspace and Class E airspace at Mosinee, WI, by increasing the radius of the existing Class D airspace and Class E airspace for Central Wisconsin Airport. Controlled airspace extending upward from the surface of the earth is needed to contain aircraft executing instrument approach procedures. The area would be depicted on appropriate aeronautical charts. Class D airspace designations are published in paragraph 5000, Class E airspace areas extending upward from the surface of the earth are published in paragraph 6002, and Class E airspace areas extending upward from 700 feet or more above the surface of the earth are published in paragraph 6005, of FAA Order 7400.9J dated August 31, 2001, and effective September 16, 2001, which is incorporated by reference in 14 CFR 71.1. The Class D and Class E airspace designations listed in this document would be published subsequently in the Order.

The FAA has determined that this proposed regulation only involves an establishment body of technical regulations for which frequent and routine amendments are necessary to keep them operationally current. Therefore this, proposed regulation—(1) is not a ''significant regulatory action'' under Executive Order 12866; (2) is not a ''significant rule'' under DOT Regulatory Policies and Procedures (44 FR 11034; February 26, 1979); and (3) does not warrant preparation of a Regulatory Evaluation as the anticipated impact is so minimal. Since this is a routine matter that will only affect air traffic procedures and air navigation, it is certified that this proposed rule will not have a significant economic impact on a substantial number of small entities under the criteria of the Regulatory Flexibility Act.

List of Subjects in 14 CFR Part 71

Airspace, Incorporation by reference, Navigation (air).

The Proposed Amendment

Accordingly, pursuant to the authority delegated to me, the Federal Aviation Administration proposes to amend 14 CFR part 71 as follows:

PART 71—DESIGNATION OF CLASS A, CLASS B, CLASS C, CLASS D, AND CLASS E AIRSPACE AREAS; AIRWAYS; ROUTES; AND REPORTING POINTS

1. The authority citation for part 71 continues to read as follows:

Authority: 49 U.S.C. 106(g), 40103, 40113, 40120; E.O. 10854, 24 FR 9565, 3 CFR, 1959–1963 Comp., p. 389.

§ 71.1 [Amended]

2. The incorporation by reference in 14 CFR 71.1 of the Federal Aviation Administration Order 7400.9J, Airspace Designations and Reporting Points, dated August 31, 2001, and effective September 16, 2001, is amended as follows:

* * * * *

Paragraph 5000 Class D airspace.

* * * * *

AGL WI D Mosinee, WI [REVISED]

Central Wisconsin Airport, WI
(Lat. 44° 46′ 39″N., long. 89° 40′ 00″W.)

That airspace extending upward from the surface to and including 3,800 feet MSL within a 4.5-mile radius of the Central Wisconsin Airport. This Class D airspace area is effective during the specific dates and times established in advance by Notice to Airmen. The effective date and time will thereafter be continuously published in the Airport/Facility Directory.

* * * * *

Paragraph 6002 Class E airspace areas extending upward from the surface of the earth.

* * * * *

AGL WI E2 Mosinee, WI [REVISED]

Central Wisconsin Airport, WI
(Lat. 44° 46′ 39″N., long. 89° 40′ 00″W.)

That airspace extending upward from the surface within 4.5-mile radius of the Central Wisconsin Airport. This Class E airspace area is effective during the specific dates and times established in advance by Notice to Airmen. The effective date and time will thereafter be continuously published in the Airport/Facility Directory.

* * * * *

Paragraph 6005 Class E airspace areas extending upward from 700 feet or more above the surface of the earth.

* * * * *

AGL WI E5 Mosinee, WI [REVISED]

Central Wisconsin Airport, WI
(Lat. 44° 46′ 39″N., long. 89° 40′ 00″W.)
Wausau VORTAC
(Lat. 44° 50′ 48″N., long. 89° 35′ 12″W.)

That airspace extending upward from 700 feet above the surface within 7.0-mile radius of the Central Wisconsin Airport, and within 4 miles each side of the Wausau VORTAC 039° radial extending from the 6.9-mile radius to 10.9 miles northeast of the airport, excluding the airspace within the Wausau, WI Class E airspace area.

Issued in Des Plaines, Illinois, on December 5, 2001.

Nancy B. Shelton,

Manager, Air Traffic Division, Great Lakes Region.

[FR Doc. 02–1008 Filed 1–15–02; 8:45 am]

BILLING CODE 4910–13–M

DEPARTMENT OF TRANSPORTATION

Federal Aviation Administration

14 CFR Part 71

[Airspace Docket No. 01–AGL–12]

Proposed Creation of Class E Airspace; Boyceville, WI

AGENCY: Federal Aviation Administration (FAA), DOT.

ACTION: Notice of proposed rulemaking.

SUMMARY: This action proposes to create Class E airspace at Boyceville, WI. An Area Navigation (RNAV) Standard Instrument Approach Procedure (SIAP) to Runway (Rwy) 08, and an RNAV SIAP Rwy 26 have been developed for Boyceville Municipal Airport. Controlled airspace extending upward from 700 feet or more above the surface of the earth is needed to contain aircraft executing this approach. This action would create Class E airspace for Boyceville Municipal Airport .

DATES: Comments must be received on or before February 17, 2002.

ADDRESSES: Send comments on the proposal in triplicate to: Federal Aviation Administration, Office of the Regional Counsel, AGL–7, Rules Docket No. 01–AGL–12, 2300 East Devon Avenue, Des Plaines, Illinois 60018.

The official docket may be examined in the Office of the Regional Counsel, Federal Aviation Administration, 2300 East Devon Avenue, Des Plaines, Illinois. An informal docket may also be examined during normal business hours at the Air Traffic Division, Airspace Branch, Federal Aviation Administration, 2300 East Devon Avenue, Des Plaines, Illinois.

FOR FURTHER INFORMATION CONTACT: Denis C. Burke, Air Traffic Division, Airspace Branch, AGL–520,Federal Aviation Administration, 2300 East Devon Avenue, Des Plaines, Illinois 60018, telephone (847) 294–7568.

SUPPLEMENTARY INFORMATION:

Comments Invited

Interested parties are invited to participate in this proposed rulemaking by submitting such written data, views, or arguments as they may desire. Comments that provide the factual basis supporting the views and suggestions presented are particularly helpful in developing reasoned regulatory decisions on the proposal. Comments are specifically invited on the overall regulatory, aeronautical, economic, environmental, and energy-related aspects of the proposal. Communications should identify the airspace docket number and be submitted in triplicate to the address listed above. Commenters wishing the FAA to acknowledge receipt of their comments on this action must submit with those comments a self-addressed, stamped postcard on which the following statement is made: ''Comments to Airspace Docket No. 01–AGL–12.'' The postcard will be date/time stamped and returned to the commenter. All communications received on or before the specified closing date for comments will be considered before taking action on the proposed rule. The proposal contained in this action may be changed in light of comments received. All comments submitted will be available for examination in the Rules Docket, FAA, Great Lakes Region, Office of the Regional Counsel, 2300 East Devon Avenue, Des Plaines, Illinois, both before and after the closing date for comments. A report summarizing each substantive public contact with FAA personnel concerned with this rulemaking will be filed in the docket.

Availability of NPRM's

Any person may obtain a copy of this Notice of Proposed Rulemaking (NPRM) by submitting a request to the Federal Aviation Administration, Office of Public Affairs, Attention: Public Inquiry Center, APA–230, 800 Independence Avenue, SW, Washington, DC 20591, or by calling (202) 267–3484. Communications must identify the docket number of this NPRM. Persons interested in being placed on a mailing list for future NPRM's should also request a copy of Advisory Circular No. 11–2A, which describes the application procedure.

The Proposal

The FAA is considering an amendment to 14 CFR part 71 to establish Class E airspace at Boyceville, WI, by creating controlled airspace for Boyceville Municipal Airport. Controlled airspace extending upward from 700 feet or more above the surface of the earth is needed to contain aircraft executing instrument approach procedures. The area would be depicted on appropriate aeronautical charts. Class E airspace areas extending upward from 700 feet or more above the surface of the earth are published in paragraph 6005 of FAA Order 7400.9J dated August 31, 2001, and effective September 16, 2001, which is incorporated by reference in 14 CFR 71.1. The Class E designations listed in this document would be published subsequently in the Order.

The FAA has determined that this proposed regulation only involves an establishment body of technical regulations for which frequent and routine amendments are necessary to keep them operationally current. Therefore this, proposed regulation—(1) is not a ''significant regulatory action'' under Executive Order 12866; (2) is not a ''significant rule'' under DOT Regulatory Policies and Procedures (44 FR 11034; February 26, 1979); and (3) does not warrant preparation of a Regulatory Evaluation as the anticipated impact is so minimal. Since this is a routine matter that will only affect air traffic procedures and air navigation, it is certified that this proposed rule will not have a significant economic impact on a substantial number of small entities under the criteria of the Regulatory Flexibility Act.

List of Subjects in 14 CFR Part 71

Airspace, Incorporation by reference, Navigation (air).

The Proposed Amendment

Accordingly, pursuant to the authority delegated to me, the Federal Aviation Administration proposes to amend 14 CFR part 71 as follows:

PART 71—DESIGNATION OF CLASS A, CLASS B, CLASS C, CLASS D, AND CLASS E AIRSPACE AREAS; AIRWAYS; ROUTES; AND REPORTING POINTS

1. The authority citation for part 71 continues to read as follows:

Authority: 49 U.S.C. 106(g), 40103, 40113, 40120; E.O. 10854, 24 FR 9565, 3 CFR, 1959–1963 Comp., p. 389.

§ 71.1 [Amended]

2. The incorporation by reference in 14 CFR 71.1 of the Federal Aviation Administration Order 7400.9J, Airspace Designations and Reporting Points, dated August 31, 2001, and effective September 16, 2001, is amended as follows:

* * * * *

Paragraph 6005 Class E airspace areas extending upward from 700 feet or more above the surface of the earth.

* * * * *

AGL WI E5 Boyceville, WI [NEW]

Boyceville Municipal Airport, WI
Lat. 45°02′39″N., long. 92°01′13″W.)

That airspace extending upward from 700 feet above the surface within an 6.4-mile radius of the Boyceville Municipal Airport, excluding that airspace within the Menomonie, WI, class E–5 airspace area.

* * * * *

Issued in Des Plaines, Illinois, on December 5, 2001.

Nancy B. Shelton,

Manager, Air Traffic Division, Great Lakes Region.

[FR Doc. 02–1015 Filed 1–15–02; 8:45 am]

BILLING CODE 4910–13–M

DEPARTMENT OF TRANSPORTATION

Federal Aviation Administration

14 CFR Part 71

[Airspace Docket No. 01–AGL–13]

Proposed Creation of Class E Airspace; Walhalla, ND

AGENCY: Federal Aviation Administration (FAA), DOT.

ACTION: Notice of proposed rulemaking.

SUMMARY: This action proposes to create Class E airspace at Walhalla, ND. An Area Navigation (RNAV) Standard Instrument Approach Procedure (SIAP) to Runway (Rwy) 33 has been developed for Walhalla Municipal Airport. Controlled airspace extending upward from 700 feet or more above the surface of the earth is needed to contain aircraft executing this approach. This action would create Class E airspace for Walhalla Municipal Airport.

DATES: Comments must be received on or before February 17, 2002.

ADDRESSES: Send comments on the proposal in triplicate to: Federal Aviation Administration, Office of the Regional Counsel, AGL–7, Rules Docket No. 01–AGL–13, 2300 East Devon Avenue, Des Plaines, Illinois 60018.

The official docket may be examined in the Office of the Regional Counsel, Federal Aviation Administration, 2300 East Devon Avenue, Des Plaines, Illinois. An informal docket may also be examined during normal business hours at the Air Traffic Division, Airspace Branch, Federal Aviation Administration, 2300 East Devon Avenue, Des Plaines, Illinois.

FOR FURTHER INFORMATION CONTACT: Denis C. Burke, Air Traffic Division, Airspace Branch, AGL–520, Federal Aviation Administration, 2300 East Devon Avenue, Des Plaines, Illinois 60018, telephone (847) 294–7568.

SUPPLEMENTARY INFORMATION:

Comments Invited

Interested parties are invited to participate in this proposed rulemaking by submitting such written data, views, or arguments as they may desire. Comments that provide the factual basis supporting the views and suggestions presented are particularly helpful in developing reasoned regulatory decisions on the proposal. Comments are specifically invited on the overall regulatory, aeronautical, economic, environmental, and energy-related aspects of the proposal. Communications should identify the airspace docket number and be submitted in triplicate to the address listed above. Commenters wishing the FAA to acknowledge receipt of their comments on this action must submit with those comments a self-addressed, stamped postcard on which the following statement is made: ''Comments to Airspace Docket No. 01–AGL–13.'' The postcard will be date/time stamped and returned to the commenter. All communications received on or before the specified closing date for comments will be considered before taking action on the proposed rule. The proposal contained in this action may be changed in light of comments received. All comments submitted will be available for examination in the Rules Docket, FAA, Great Lakes Region, Office of the Regional Counsel, 2300 East Devon Avenue, Des Plaines, Illinois, both before and after the closing date for comments. A report summarizing each substantive public contact with FAA personnel concerned with this rulemaking will be filed in the docket.

Availability of NPRM's

Any persons may obtain a copy of this Notice of Proposed Rulemaking (NPRM) by submitting a request to the Federal Aviation Administration, Office of Public Affairs, Attention: Public Inquiry Center, APA–230, 800 Independence Avenue, SW., Washington, DC 20591, or by calling (202) 267–3484. Communications must identify the docket number of this NPRM. Persons interested in being placed on a malign list for future NPRM's should also request a copy of Advisory Circular No. 11–2A, which describes the application procedure.

The Proposal

The FAA is considering an amendment to 14 CFR part 71 to establish Class E airspace at Walhalla, ND, by creating controlled airspace for Walhalla Municipal Airport. Controlled airspace extending upward from 700 feet or more above the surface of the earth is needed to contain aircraft executing instrument approach procedures. The area would be depicted on appropriate aeronautical charts. Class E airspace areas extending upward from 700 feet or more above the surface of the earth are published in paragraph 6005 of FAA Order 7400.9J dated August 31, 2001, and effective September 16, 2001, which is incorporated by reference in 14 CFR part 71.1. The Class E designations listed in this document would be published subsequently in the Order.

The FAA has determined that this proposed regulation only involves an establishment body of technical regulations for which frequent and routine amendments are necessary to keep them operationally current. Therefore this, proposed regulation—(1) is not a ''significant regulatory action'' under Executive Order 12866; (2) is not a ''significant rule'' under DOT Regulatory Policies and Procedures (44 FR 11034; February 26, 1979); and (3) does not warrant preparation of a Regulatory Evaluation as the anticipated impact is so minimal. Since this is a routine matter that will only affect air traffic procedures and air navigation, it is certified that this proposed rule will not have a significant economic impact on a substantial number of small entities under the criteria of the Regulatory Flexibility Act.

List of Subjects in 14 CFR Part 71

Airspace, Incorporation by reference, Navigation (air).

The Proposed Amendment

Accordingly, pursuant to the authority delegated to me, the Federal Aviation Administration proposes to amend 14 CFR part 71 as follows:

PART 71—DESIGNATION OF CLASS A, CLASS B, CLASS C, CLASS D, AND CLASS E AIRSPACE AREAS; AIRWAYS; ROUTES; AND REPORTING POINTS

1. The authority citation for part 71 continues to read as follows:

Authority: 49 U.S.C. 106(g), 40103, 40113, 40120; E.O. 10854, 24 FR 9565, 3 CFR, 1959–1963 Comp., p. 389.

§ 71.1 [Amended]

2. The incorporation by references in 14 CFR 71.1 of the Federal Aviation Administration Order 7400.9J, Airspace Designations and Reporting Points, dated August 31, 2001, and effective September 16, 2001, is amended as follows:

* * * * *

Paragraph 6005 Class E airspace areas extending upward from 700 feet or more above the surface of the earth.

* * * * *

AGL ND E5 Walhalla, ND [NEW]

Walhalla Municipal Airport, ND
(Lat. 48°56′26″N., long. 97°54′10″W.)
Devils Lake VOR/DME
(Lat. 48°06′55″N., long. 98°54′45″W.)

That airspace extending upward from 700 feet above the surface within an 6.3-mile radius of the Walhalla Municipal Airport, excluding that airspace north of lat. 49°00′00″N., and that airspace extending upward from 1200 feet above the surface bounded by a line beginning at lat. 49°00′00″N., long. 97°30′00″W., to lat., 48°48′00″N., long. 97°30′00″W., to lat. 48°22′00″N., long. 98°31′00″W., via the Devils Lake VOR/DME 22 mile radius counter clockwise to long. 99°00′00″W., to lat. 49°00′00″N., long. 99°00′00″W., to point of beginning.

* * * * *

Issued in Des Plaines, Illinois, on December 5, 2001.

Nancy B. Shelton,

Manager, Air Traffic Division, Great Lake Region.

[FR Doc. 02–1011 Filed 1–15–02; 8:45 am]

BILLING CODE 4910–13–M

DEPARTMENT OF TRANSPORTATION

Federal Aviation Administration

14 CFR Part 71

[Airspace Docket No. 01–AGL–14]

Proposed Modification of Class D Airspace; Columbus, OH

AGENCY: Federal Aviation Administration (FAA), DOT.

ACTION: Notice of proposed rulemaking.

SUMMARY: This action proposes to modify Class D airspace at Columbus, OH. A cutout in the Bolton Field Class D airspace is currently in place between 060 degrees and 105 degrees, from a 1.3-mile radius of the airport. This cutout exists to protect South Columbus airport which has since been closed. This action would revert the airspace contained in the cutout back to Bolton Field Class D airspace.

DATES: Comments must be received on or before February 17, 2002.

ADDRESSES: Send comments on the proposal in triplicate to: Federal Aviation Administration, Office of the Regional Counsel, AGL–7, Rules Docket No. 01–AGL–14, 2300 East Devon Avenue, Des Plaines, Illinois 60018.

The official docket may be examined in the Office of the Regional Counsel, Federal Aviation Administration, 2300 East Devon Avenue, Des Plaines, Illinois. An informal docket may also be examined during normal business hours at the Air Traffic Division, Airspace Branch, Federal Aviation Administration, 2300 East Devon Avenue, Des Plaines, Illinois.

FOR FURTHER INFORMATION CONTACT: Denis C. Burke, Air Traffic Division, Airspace Branch, AGL–520, Federal Aviation Administration, 2300 East Devon Avenue, Des Plaines, Illinois 60018, telephone (847) 294–7568.

SUPPLEMENTARY INFORMATION:

Comments Invited

Interested parties are invited to participate in this proposed rulemaking by submitting such written data, views, or arguments as they may desire. Comments that provide the factual basis supporting the views and suggestions presented are particularly helpful in developing reasoned regulatory decisions on the proposal. Comments are specifically invited on the overall regulatory, aeronautical, economic, environmental, and energy-related aspects of the proposal. Communications should identify the airspace docket number and be submitted in triplicate to the address listed above. Commenters wishing the FAA to acknowledge receipt of their comments on this action must submit with those comments a self-addressed, stamped postcard on which the following statement is made: ''Comments to Airspace Docket No. 01–AGL–14.'' The postcard will be date/time stamped and returned to the commenter. All communications received on or before the specified closing date for comments will be considered before taking action on the proposed rule. The proposal contained in this action may be changed in light of comments received. All comments submitted will be available for examination in the Rules Docket, FAA, Great Lakes Region, Office of the Regional Counsel, 2300 East Devon Avenue, Des Plaines, Illinois, both before and after the closing date for comments. A report summarizing each substantive public contact with FAA personnel concerned with this rulemaking will be filed in the docket.

Availability of NPRM's

Any person may obtain a copy of this Notice of Proposed rulemaking (NPRM) by submitting a request to the Federal Aviation Administration, Office of Public Affairs, Attention: Public Inquiry Center, APA–230, 800 Independence Avenue, SW., Washington, DC 20591, or by calling (202) 267–3484. Communications must identify the docket number of this NPRM. Persons interested in being placed on a mailing list for future NPRM's should also request a copy of Advisory Circular No. 11–2A, which describes the application procedure.

The Proposal

The FAA is considering an amendment to 14 CFR part 71 to modify Class D airspace at Columbus, OH, by changing the Bolton Field Class D Airspace legal description. The new description would include a former cutout established to protect the South Columbus Airport which has since been closed. Controlled airspace extending upward from the surface is needed to contain aircraft executing instrument approach procedures. The area would be depicted on appropriate aeronautical charts. Class D airspace areas are published in paragraph 500 of FAA Order 7400.9J dated August 31, 2001, and effective September 16, 2001, which is incorporated by reference in 14 CFR part 71.1. The Class D designations listed in this document would be published subsequently in the Order.

The FAA has determined that this proposed regulation only involves an establishment body of technical regulations for which frequent and routine amendments are necessary to keep them operationally current. Therefore, this proposed regulation—(1) is not a ''significant regulatory action'' under Executive Order 12866; (2) is not a ''significant rule'' under DOT Regulatory Policies and Procedures (44 FR 11034; February 26, 1979); and (3) does not warrant preparation of a Regulatory Evaluation as the anticipated impact is so minimal. Since this is a routine matter that will only affect air traffic procedures and air navigation, it is certified that this proposed rule will not have a significant economic impact on a substantial number of small entities under the criteria of the Regulatory Flexibility Act.

List of Subjects in 14 CFR Part 71

Airspace, Incorporation by reference, Navigation (air).

The Proposed Amendment

Accordingly, pursuant to the authority delegated to me, the Federal

Aviation Administration proposes to amend 14 CFR part 71 as follows:

PART 71—DESIGNATION OF CLASS A, CLASS B, CLASS C, CLASS D, AND CLASS E AIRSPACE AREAS; AIRWAYS; ROUTES, AND REPORTING POINTS

1. The authority citation for part 71 continues to read as follows:

Authority: 49 U.S.C. 106(g), 40103, 40113, 40120; E.O. 10854, 24 FR 9565, 3 CFR, 1959–1963 Comp., p. 389.

71.1 [Amended]

2. The incorporation by reference in 14 CFR 71.1 of the Federal Aviation Administration Order 7400.9J, Airspace Designations and Reporting Points, dated August 31, 2001, and effective September 16, 2001, is amended as follows:

* * * * *

Paragraph 5000 Class D airspace areas extending upward from the surface of the earth.

* * * * *

AFGL OH D Columbus, OH [REVISED]

Columbus, Bolton Filed Airport, OH
(Lat. 39°54′03″N., long. 83°08′14″W.)

That airspace extending upward from the surface to and including 3,400 feet MSL within a 3.9-mile radius of Bolton Field Airport, extending that portion beyond a 1.9-mile radius of the Bolton Field Airport bearing 290° to 325°, excluding that airspace within the Port Columbus International Airport, OH Class C airspace area. This Class D airspace area is effective during the specific dates and times established in advance by a Notice to Airman. The effective dates and time will thereafter be continuously published in the Airport/Facility Directory.

* * * * *

Nancy B. Shelton,

Acting Manager, Air Traffic Division, Great Lakes Region.

[FR Doc. 02–1007 Filed 1–15–02; 8:45 am]

BILLING CODE 4910–13–M

RAILROAD RETIREMENT BOARD

20 CFR Part 345

RIN 3220–AB52

Employers' Contributions and Contribution Reports

AGENCY: Railroad Retirement Board.

ACTION: Proposed rule.

SUMMARY: The Railroad Retirement Board (Board) proposes to amend its regulations to permit the filing of contribution reports via the Internet. The Government Paperwork Elimination Act provides that Federal agencies are required by October 21, 2003, to provide ''for the option of the electronic maintenance, submission, or disclosure of information, when practicable as a substitute for paper''. The proposed changes to part 345 will permit the filing of Form DC–1, ''Employer's Quarterly Report of Contributions Under the Railroad Unemployment Insurance Act'' electronically.

DATES: Submit comments on or before March 18, 2002.

ADDRESSES: Address any comments concerning this proposed rule to Beatrice Ezerski, Secretary to the Board, Railroad Retirement Board, 844 North Rush Street, Chicago, Illinois 60611–2092.

FOR FURTHER INFORMATION CONTACT: Marguerite P. Dadabo, Assistant General Counsel, (312) 751–4945, TTD (312) 751–4701.

SUPPLEMENTARY INFORMATION: The amendments would revise sections of part 345 of the Board's regulations (20 CFR part 345) to permit the filing of employer contribution reports via the Internet. The Government Paperwork Elimination Act, Pub. L. 105–277 §§ 1701–1710 (codified as 44 U.S.C. 3504n) provides that Federal agencies are required by October 21, 2003, to provide ''for the option of the electronic maintenance, submission, or disclosure of information, when practicable as a substitute for paper''. The proposed amendments to part 345 will permit the filing of Form DC–1, ''Employer's Quarterly Report of Contributions Under the Railroad Unemployment Insurance Act'' electronically.

The revision of § 345.111 provides that if the DC–1 is filed electronically, no duplicate filing is required. The revision to § 345.113 provides that the DC–1 may be filed electronically through the Board's agent. That section is further amended to provide that if the DC–1 is filed electronically, no further authentication is required. The paper Form DC–1 must be signed. However, with submission of the DC–1 electronically, the Board intends to use a user-ID/PIN/Password system for the submission of the form as a substitute for a required signature.

Employers currently use a user-ID/PIN/password system to access RRBLINK and make electronic tax deposits. Form DC–1 is being added to the existing system. The user-ID/PIN/password system was established under a Memorandum of Understanding between Firstar Bank and the U.S. Department of the Treasury. A PIN/password system is used to access the pay.gov site to which the RRBLINK system will eventually migrate. The pay.gov site is operated by U.S. Department of the Treasury. Such a system also is consistent with the guidance provided by the Department of Justice regarding the use of electronic processes.

The revision to § 345.114 permits the use of an electronic version of the DC–1 that can be accessed from the Board's financial agent. Section 345.115 has been revised to provide that the DC–1, if filed electronically, may be filed with the Board's designee.

Section 345.124 has been revised to clarify that if an employer wishes to appeal the amount of the contribution, interest, or penalty, the procedure in that section is to be followed. Section 345.307 has been revised to clarify that if the employer wishes to protest the contribution rate, the procedure in that section is to be followed. In addition, the title of the person who hears such a protest has been revised due to an agency reorganization from the ''Director of Unemployment and Sickness Insurance'' to the ''Director of Assessment and Training'.

The Board, with the concurrence of the Office of Management and Budget, has determined that this is not a significant regulatory action under Executive Order 12866. Therefore, no regulatory analysis is required. The Office of Management and Budget has approved information collections associated with this rule under control number 3220–0012.

List of Subjects in 20 CFR Part 345

Electronic filing, Paperwork elimination, Railroad unemployment insurance, Reporting and recordkeeping requirements.

For the reasons set out in the preamble, the Railroad Retirement Board proposes to amend title 20, chapter II, Part 345 of the Code of Federal Regulations as follows:

PART 345—EMPLOYERS' CONTRIBUTIONS AND CONTRIBUTION REPORTS

1. The authority citation for part 345 continues to read as follows:

Authority: 45 U.S.C. 362(1).

2. Section 345.111 of Subpart B is revised to read as follows:

§ 345.111 Contribution reports.

(a) *General.* (1) Except as provided in paragraph (a)(2) of this section, every employer shall, for each calendar quarter of each year, prepare a contribution report, in duplicate, on Form DC–1. If the Form DC–1 is filed

electronically, no duplicate submission is required.

(2) Contribution reports of employers who are required by State law to pay compensation on a weekly basis shall include with respect to such compensation all payroll weeks in which all or the major part of the compensation falls within the period for which the reports are required.

(b) *Compensation to be reported on Form DC–1.* Employers shall enter on the employer's quarterly contribution report, prior to any additions or subtractions, the amount of creditable compensation appearing on payrolls or other disbursement documents for the corresponding quarter as the amount of creditable compensation from which the contribution payable for that quarter is to be computed.

(Approved by the Office of Management and Budget under control number 3220–0012)

3. Section 345.113 of Subpart B is revised to read as follows:

§ 345.113 Execution of contribution reports.

(a) Each contribution report on Form DC–1 shall be signed by hand by:

(1) The individual, if the employer is an individual;

(2) The president, vice president, or other duly authorized officer, if the employer is a corporation; or

(3) A responsible and duly authorized member or officer having knowledge of its affairs if the employer is a partnership or other unincorporated organization.

(b) The Form DC–1 may be filed electronically through the Board's authorized agent. If filed electronically, no further authentication is required.

4. Section 345.114 of Subpart B is revised to read as follows:

§ 345.114 Prescribed forms for contribution reports.

Each employer's contribution report, together with any prescribed copies and supporting data, shall be filled out in accordance with the instructions and regulations applicable thereto. The prescribed forms may be obtained from or accessed by contacting the Board. An employer will not be excused from making a contribution report for the reason that no form has been furnished to such employer. Application should be made to the Board for the prescribed forms in ample time to have the contribution report prepared, verified, and filed with the Board on or before the due date. Contribution reports that have not been so prepared will not be accepted and shall not be considered filed for purposes of § 345.115 of this part. In case the prescribed form has not been obtained, a statement made by the employer disclosing the period covered and the amount of compensation with respect to which the contribution is required may be accepted as a tentative contribution report if accompanied by the amount of contribution due. If filed within the prescribed time, the statements so made will relieve the employer from liability for any penalty imposed under this part for the delinquent filing of the contribution report provided that the failure to file a contribution report on the prescribed form was due to reasonable cause and not due to willful neglect, *and provided further*, that within 30 days after receipt of the tentative report, such tentative report is supplemented by a contribution report made on the proper form. (Approved by the Office of Management and Budget under control number 3220–0012)

5. Section 345.115 of Subpart B is revised to read as follows:

§ 345.115 Place and time for filing contribution reports.

Each employer shall file its contribution report with the Chief Financial Officer, Railroad Retirement Board, 844 North Rush Street, Chicago, Illinois, 60611–2092, or the Chief Financial Officer's designee. The employer's contribution report for each quarterly period shall be filed on or before the last day of the calendar month following the period for which it is made. If such last day falls on Saturday, Sunday, or a national legal holiday, the report may be filed on the next following business day. If mailed, reports must be postmarked on or before the date on which the report is required to be filed.

6. Section 345.124 of Subpart B is revised to read as follows:

§ 345.124 Right to appeal the amount of a contribution, interest, or penalty.

(a) Except as otherwise provided, an employer may seek administrative review of any determination with respect to any contribution, interest, or penalty made under this part by filing a request for reconsideration with the Chief Financial Officer within 30 days after the mailing of notice of such determination. An employer shall have a right to appeal to the Board from any reconsideration decision under this section by filing notice of appeal to the Secretary to the Board within 14 days after the mailing of the decision on reconsideration. Upon receipt of a notice of an appeal, the Board may designate one of its officers or employees to receive evidence and report to the Board under the procedures set forth in part 319 of this chapter. An appeal of the contribution rate is made under § 345.307 of this part.

(b) Any appeal filed under this part shall not relieve the employer from filing any reports or paying any contribution required under this part nor stay the collection thereof. Upon the request of an employer, the Board may relieve the employer of any obligation required under this part pending an appeal. Unless specifically provided by the Board, such relief shall not stay the accrual of interest on any disputed amount as provided for in § 345.122 of this part.

7. Section 345.307 of Subpart D is revised to read as follows:

§ 345.307 Rate protest.

(a) *Request for reconsideration.* An employer may appeal a determination of a contribution rate computed under this part by filing a request for reconsideration with the Director of Assessment and Training within 90 days after the date on which the Board notified the employer of its rate of contribution for the next ensuing calendar year. Within 45 days of the receipt of a request for reconsideration, the Director shall issue a decision on the protest.

(b) *Appeal to the Board.* An employer aggrieved by the decision of the Director of Assessment and Training under paragraph (a) of this section may appeal to the Board. Such appeal shall be filed with the Secretary to the Board within 30 days after the date on which the Director notified the employer of the decision on reconsideration. The Board may decide such appeal without a hearing or, in its discretion, may refer the matter to a hearings officer pursuant to part 319 of this chapter.

(c) *Decision of the Board final.* Subject to judicial review provided for in section 5(f) of the RUIA, the decision of the Board under paragraph (b) of this section is final with respect to all issues determined therein.

(d) *Waiver of time limits.* A request for reconsideration or appeal under this section shall be forfeited if the request or appeal is not filed within the time prescribed, unless reasonable cause, as defined in this part, for failure to file timely is shown.

(e) *Rate pending review.* Pending review of the protested rate, the employer shall continue to pay contributions at such rate. Any adjustment in the contributions paid at such rate as the result of an appeal shall be in accordance with § 345.118 of this part.

(f) The amount of a contribution, interest, or penalty may be protested in accord with § 345.124 of this part.

By Authority of the Board.

Dated: January 10, 2002.

Beatrice Ezerski,

Secretary to the Board.

[FR Doc. 02–1095 Filed 1–15–02; 8:45 am]

BILLING CODE 7905–01–P

ENVIRONMENTAL PROTECTION AGENCY

40 CFR Part 86

[AMS–FRL–7129–2]

RIN 2060–AJ73

Control of Air Pollution From New Motor Vehicles and New Motor Vehicle Engines; Proposed Non-Conformance Penalties for 2004 and Later Model Year Emission Standards for Heavy-Duty Diesel Engines and Heavy-Duty Diesel Vehicles

AGENCY: Environmental Protection Agency (EPA).

ACTION: Notice of proposed rulemaking.

SUMMARY: EPA is proposing that nonconformance penalties (NCPs) be made available for the 2004 and later model year non-methane hydrocarbons and nitrogen oxides (NMHC+NO_X) standard for heavy-duty diesel engines and vehicles. In general, the availability of NCPs allows a manufacturer of heavy-duty engines (HDEs) or heavy-duty vehicles (HDVs) (which include heavy light-duty trucks) whose engines or vehicles fail to conform with certain applicable emission standards, but do not exceed a designated upper limit, to be issued a certificate of conformity upon payment of a monetary penalty. The proposed upper limit associated with the 2004 emission standard for NMHC+NO_X is 4.5 grams per brake-horsepower-hour for light and medium heavy-duty engines and urban buses, and 6.0 grams per brake-horsepower-hour for heavy heavy-duty engines.

DATES: *Public comment:* We must receive your comments by March 18, 2002.

Public hearing: We will hold a public hearing regarding this proposed rule on February 15, 2002, beginning at 10:00 a.m.

ADDRESSES: *Comments:* We must receive your comments by the date indicated under **DATES** above. Send paper copies of written comments (in duplicate if possible) to the contact person listed below. In your correspondence, refer to Docket A–2000–30. See Section VI.B for more information on comment procedures.

Public hearing: We will hold a public hearing on February 15, 2002 at the Washington Dulles Airport Marriott, 45020 Aviation Drive, Dulles, Virginia 20166. Phone: (703–471–9500). If you want to testify at the hearing, notify the contact person listed below at least ten days before the date of the hearing. See Section VI.B for more information on the public-hearing procedures.

Public docket: EPA's Air Docket makes materials related to this rulemaking available for review in Docket No. A–2001–30 located at U.S. Environmental Protection Agency (EPA), Air Docket (6102), Room M–1500, 401 M. Street, SW, Washington, DC 20460 (on the ground floor in Waterside Mall) from 8 a.m. to 5:30 p.m., Monday through Friday, except on government holidays. You can reach the Air Docket by telephone at (202) 260–4400. We may charge a reasonable fee for copying docket materials, as provided in 40 CFR part 2.

FOR FURTHER INFORMATION CONTACT: Margaret Borushko, U.S. EPA, National Vehicle and Fuels Emission Laboratory, 2000 Traverwood, Ann Arbor, MI 48105; Telephone (734) 214–4334; Fax: (734) 214–4816; E-mail: borushko.margaret@epa.gov.

SUPPLEMENTARY INFORMATION:

Regulated Entities

This proposed action would affect you if you produce or import new heavy-duty diesel engines which are intended for use in highway vehicles such as trucks and buses or heavy-duty highway vehicles. The table below gives some examples of entities that may have to follow the proposed regulations. But because these are only examples, you should carefully examine the proposed and existing regulations in 40 CFR part 86. If you have questions, call the person listed in the **FOR FURTHER INFORMATION CONTACT** section above.

Category	NAICS [a] Codes	SIC Codes [b]	Examples of potentially regulated entities
Industry	336112 336120	3711	Engine and truck manufacturers

[a] North American Industry Classification System (NAICS).
[b] Standard Industrial Classification (SIC) system code.

Access to Rulemaking Documents Through the Internet

Today's proposal is available electronically on the day of publication from the Environmental Protection Agency Internet Web site listed below. Electronic copies of the preamble, regulatory language, Draft Technical Support Document, and other documents associated with today's proposal are available from the EPA Office of Transportation and Air Quality (formerly the Office of Mobile Sources) Web site listed below shortly after the rule is signed by the Administrator. This service is free of charge, except any cost that you incur for connecting to the Internet.

Environmental Protection Agency Web Site: *http://www.epa.gov/fedrgstr/*

(Either select a desired date or use the Search feature.)

Office of Transportation and Air Quality (OTAQ) Web Site: *http://www.epa.gov/otaq/*

(Look in ''What's New'' or under the ''Heavy Trucks/Buses'' topic.)

Please note that due to differences between the software used to develop the document and the software into which document may be downloaded, changes in format, page length, etc. may occur.

Table of Contents

I. Background and Statutory Authority
A. Background to Nonconformance Penalty Rules
B. Statutory Authority
C. Heavy-duty Diesel Consent Decrees
II. Nonconformance Penalties for 2004 and Later Heavy-Duty Engines and Heavy-Duty Vehicles
A. NCP Eligibility: Emission Standards for Which NCPs are Proposed
1. Heavy-Duty Diesel NMHC+NO_X Standard
B. NCP Eligibility: Emission Standards for Which NCPs are Not Proposed
1. Heavy-Duty Gasoline Standards
2. 2004 Tier 2 Medium-duty Passenger Vehicles & Heavy Light-duty Trucks
III. Penalty Rates
A. Parameters
1. Upper Limit
2. Parameter Values
3. Penalty Curves

B. Issues and Alternatives
1. Adjustment to Reflect Differences in Performance (other than fuel economy)
2. Projected Fuel Price
3. Discount Rates
IV. Economic Impact
V. Environmental Impact
VI. Public Participation
A. How Do I Submit Comments?
B. Will There Be a Public Hearing?
VII. Administrative Requirements
A. Regulatory Planning and Review: Executive Order 12866
B. Regulatory Flexibility Act, as amended by the Small Business Regulatory Enforcement Fairness Act of 1996 (SBREFA), 5 USC 601 et. seq.
C. Paperwork Reduction Act
D. Unfunded Mandates Reform Act
E. Executive Order 13175: Consultation and Coordination with Indian Tribal Governments
F. National Technology Transfer and Advancement Act
G. Executive Order 13045: Children's Health Protection
H. Executive Order 13132: Federalism
I. Executive Order 13211: Energy Effects
J. Plain Language

I. Background and Statutory Authority

A. Background to Nonconformance Penalty Rules

Since the promulgation of the first NCP rule in 1985, NCP rules have generally been described as continuing ''phases'' of the NCP program. The first NCP rule (Phase I), sometimes referred to as the ''generic'' NCP rule, established three basic criteria for determining the eligibility of emission standards for nonconformance penalties in any given model year (50 FR 35374, August 30, 1985). For regulatory language, *see* 40 CFR 86.1103–87. First, the emission standard in question must become more difficult to meet. This can occur in two ways, either by the emission standard itself becoming more stringent, or due to its interaction with another emission standard that has become more stringent. Second, substantial work must be required in order to meet the emission standard. EPA considers ''substantial work'' to mean the application of technology not previously used in that vehicle or engine class/subclass, or a significant modification of existing technology, in order to bring that vehicle/engine into compliance. EPA does not consider minor modifications or calibration changes to be classified as substantial work. Third, a technological laggard must be likely to develop. Prior NCP rules have considered a technological laggard to be a manufacturer who cannot meet a particular emission standard due to technological (not economic) difficulties and who, in the absence of NCPs, might be forced from the marketplace. EPA will make the determination that a technological laggard is likely to develop, based in large part on the above two criteria. However, these criteria are not always sufficient to determine the likelihood of the development of a technological laggard. An emission standard may become more difficult to meet and substantial work may be required for compliance, but if that work merely involves transfer of well-developed technology from another vehicle class, it is unlikely that a technological laggard would develop.

The criteria and methodologies established in the 1985 rule have since been used to determine eligibility and to establish NCPs for a number of heavy-duty emission standards. Phases II, III, IV, and V, published in the period from 1985 to 1996, established NCPs that, in combination, cover the full range of heavy-duty—from heavy light-duty trucks (6,000–8,500 pounds gross vehicle weight) to the largest diesel truck and urban bus engines. NCPs have been established for hydrocarbons (HC), carbon monoxide (CO), nitrogen oxides (NO_X), and particulate matter (PM). The most recent NCP rule (61 FR 6949, February 23, 1996) established NCPs for the 1998 and later model year NO_X standard for heavy-duty diesel engines (HDDEs), the 1996 and later model year for Light-Duty Truck 3 (LDT3) NO_X standard, and the 1996 and later urban bus PM standard. A concurrent but separate final rule (61 FR 6944, February 23, 1996) established NCPs for the 1996 LDT3 PM standard. The NCP rulemaking phases are summarized in greater detail in the Draft Technical Support Document for this proposal.

B. Statutory Authority

Section 206(g) of the Clean Air Act (the Act), 42 U.S.C. 7525(g), requires EPA to issue a certificate of conformity for HDEs or HDVs which exceed a federal emissions standard, but do not exceed an upper limit associated with that standard, if the manufacturer pays an NCP established by rulemaking. Congress adopted section 206(g) in the Clean Air Act Amendments of 1977 as a response to perceived problems with technology-forcing heavy-duty emissions standards. Following *International Harvester* v. *Ruckelshaus*, 478 F.2d 615 (D.C. Cir. 1973), Congress realized the dilemma that technology-forcing standards were likely to cause. If strict standards were maintained, then some manufacturers, ''technological laggards,'' might be unable to comply initially and would be forced out of the marketplace. NCPs were intended to remedy this potential problem. The laggards would have a temporary alternative that would permit them to sell their engines or vehicles by payment of a penalty. At the same time, conforming manufacturers would not suffer an economic disadvantage compared to nonconforming manufacturers, because the NCP would be based, in part, on money saved by the technological laggard and its customer from the nonconforming engine or vehicle.

Under section 206(g)(1), NCPs may be offered for HDVs or HDEs. The penalty may vary by pollutant and by class or category of vehicle or engine. HDVs are defined in section 202(b)(3)(C) of the CAA as vehicles in excess of 6,000 pounds gross vehicle weight rating (GVWR). The light-duty truck (LDT) classification includes trucks that have a GVWR of 8500 lbs or less. Therefore, certain LDTs may be classified as HDVs. Historically, LDTs up through 6000 lbs GVWR have been considered ''light light-duty trucks'' (LLDTs) and LDTs between 6,001 and 8,500 pounds GVWR have been considered ''heavy light-duty trucks'' (HLDTs). Based on various new requirements established by the Clean Air Act Amendments of 1990, each of these two light truck categories has been further subdivided into groups by weight. The LLDTs are classified by weight based on ''loaded vehicle weight,'' or LVW, which maintains its current definition: curb weight plus 300 lbs. The trucks up through 3750 lbs LVW make up a subclass called light-duty-trucks-1, or LDT1. Those greater than 3750 lbs LVW but less than or equal to 6000 lbs GVWR are the subclass light-duty-trucks-2, or LDT2. The HLDTs are divided at 5750 lbs ''adjusted loaded vehicle weight,'' or ALVW. Adjusted loaded vehicle weight is the average of the curb weight and the GVWR. The HLDTs that are up through 5750 lbs ALVW are called light-duty trucks-3, or LDT3. Those above 5750 lbs ALVW but less than or equal to 8500 lbs GVWR are light-duty-trucks-4, or LDT4. The LDT3 and LDT4 subclasses make up the HLDT vehicle class. Since NCPs can only be established for heavy duty vehicles or engines, emission standards for light-duty trucks of the LDT3 and LDT4 categories are the only light-duty truck categories eligible for NCPs.

Section 206(g)(3) requires that NCPs:

- Account for the degree of emission nonconformity;
- Increase periodically to provide incentive for nonconforming manufacturers to achieve the emission standards; and
- Remove the competitive disadvantage to conforming manufacturers.

Section 206(g) authorizes EPA to require testing of production vehicles or engines in order to determine the emission level on which the penalty is based. If the emission level of a vehicle or engine exceeds an upper limit of nonconformity established by EPA through regulation, the vehicle or engine would not qualify for an NCP under section 206(g) and no certificate of conformity could be issued to the manufacturer. If the emission level is below the upper limit but above the standard, that emission level becomes the ''compliance level,'' which is also the benchmark for warranty and recall liability; the manufacturer who elects to pay the NCP is liable for vehicles or engines that exceed the compliance level in-use, unless, for the case of HLDTs, the compliance level is below the in-use standard. The manufacturer does not have in-use warranty or recall liability for emissions levels above the standard but below the compliance level.

C. Heavy-duty Diesel Consent Decrees

On October 22, 1998, the Department of Justice and the Environmental Protection Agency announced settlements with seven major manufacturers of diesel engines that represent a majority of the diesel engine market. The settlements resolved claims that they installed computer software on heavy duty diesel engines that turned off the engine emission control system during highway driving in violation of the CAA's prohibition on defeat devices (42 USC 7522(a)(3)). The settlements were entered by the Court on July 1, 1999. These consent decrees with the Federal Government contained a number of provisions applying to heavy-duty on-road, and in some cases, nonroad, engines. Specific to the engines that would be addressed by the proposed 2004 NCPs, the decrees permit the continued use of non-complying engines for a period of time (although emissions are capped by limits associated with new supplemental test procedures). Other elements of these consent decrees include a program under which the consent decree manufacturers are required to invest considerable resources to evaluate instrumentation and methodologies for on-road testing. Because the Consent Decrees refer to NCPs for the 2004 model year, if published, promulgation of this rule would have an impact on the penalties determined under the Consent Decrees.

II. Nonconformance Penalties for 2004 and Later Heavy-Duty Engines and Heavy-Duty Vehicles

A. NCP Eligibility: Emission Standards for Which NCPs are Proposed

1. Heavy-Duty Diesel NMHC+NO_X Standard

As discussed in section III.A., EPA must determine that three criteria are met in order to determine an NCP should be established in any given model year. For the model year 2004 heavy-duty diesel NMHC+NO_X standard, we believe these criteria have been met and it is therefore appropriate to establish NCPs for the 2004 model year NMHC+NO_X standard.

The first criteria requires that the emission standard in question must become more difficult to meet. This is the case with the 2004 NMHC+NO_X standard. The previous emission standards for this category are 4.0 g/bhp-hr NO_X and 1.3 g/bhp-hr HC. The 2004 standards is a combined NMHC+NO_X standard of 2.4 g/bhp-hr, or optionally a 2.5 g/bhp-hr NMHC+NO_X with a limit of 0.5 g/bhp-hr NMHC.[1] When promulgated, the Agency concluded that the 2004 standard was a technology forcing standard, and therefore it is logical to conclude the standard is more difficult to meet.

The second criteria which must be met in order for EPA to determine that an NCP should be established is substantial work must be required to meet the emission standard. This criteria has also been met. As discussed in both the 1997 final rule (See 62 FR 54694, October 21, 1997) which established the 2004 standards, as well as the 2000 final rule (See 65 FR 59896, October 6, 2000) which reaffirmed those standards, EPA projected that new emission control technologies would be needed to achieve the 2004 standards. In these previous rulemakings EPA pointed to technologies such as cooled exhaust gas recirculation (EGR) and variable geometry turbochargers (VGT) as some of the technologies manufacturers could use to meet the 2004 standards. Such technologies have not previously been used in the on-highway heavy-duty diesel market, and EPA estimated substantial research and development efforts by the engine manufacturers would be undertaken to meet the 2004 standards. We continue to believe such new technologies will be used by a number of engine manufacturers, and in fact several manufacturers have indicated in recent statements they will use new emission control technologies in order to achieve the 2004 standards.[2]

The final criteria for EPA to determine that an NCP should be established is that a technological laggard is likely to develop. EPA has several reasons to believe a technological laggard is likely. First, during our recent discussions with a number of engine manufacturers, several manufacturers have indicated they may not be able to make the necessary technological changes to meet the 2004 emission standards for some of their high horsepower ratings by model year 2004. Manufacturers have indicated that while they are continuing to develop cooled EGR systems and associated technologies (such as advanced turbocharger technologies) and have reached no definitive conclusion, they are concerned regarding their ability to comply in 2004 with these higher horsepower engines. Engines with higher horsepower ratings typically operate at higher boost levels (higher intake manifold pressures), as well as higher fueling rates. This is the case on today's engines. With the addition of cooled EGR, boost levels must be increased even further in order to accommodate EGR while maintaining the same power ratings. This can push both peak cylinder pressures and turbocharger designs to their physical limitations. While manufacturers are exploring a number of technologies to extend the current limitations, they are concerned with their ability to do so with all of the currently available power ratings between now and 2004.

Second, during recent discussions with engine manufacturers, one manufacturer has indicated that some low volume engine families currently available may not be ready by 2004. A low volume engine family may require specific and targeted research and development efforts in order to comply with the 2004 standards, and it is reasonable to expect that manufacturers may focus their efforts on these low volume products later in the development process, and time may be too short to bring the product into compliance for the 2004 model year.

Finally, in the final rule completed in 2000 which reaffirmed the 2004 NMHC+NO_X standard, three engine manufactures as well as the Engine Manufacturers Association (EMA),

[1] NMHC stands for non-methane hydrocarbons, which is a measure of total hydrocarbons with the methane emissions subtracted out. For typical on-highway diesel fueled heavy-duty engines, methane emissions are on the order of 10 percent of the total hydrocarbon emissions.

[2] See press releases from Caterpillar Inc., Cummins, Detroit Diesel Corp. and Mack, available in EPA Air Docket A–2001–30.

commented that EPA should establish NCPs for the 2004 standards.[3] EMA commented the standards ''will be technology-forcing and likely will result in the inability of some engine manufacturers and/or engine families to comply with the standards.'' Detroit Diesel Corp. commented ''Meeting the 2004 standards will require the use of sophisticated new emission control technology and will require emission durability evaluation over a greatly extended useful life period. * * * Any development setbacks or misjudgement regarding the capability or durability of the new emission control technology could, at the last minute, put an engine manufacturer into a laggard position and prevent certification of an engine family. The likelihood of a technological laggard for 2004 is at least as great and probably much greater than for other standards for which NCPs have been provided.'' When we finalized the reaffirmation of the 2004 NO_X+NMHC standard in 2000 we agreed that the standards were technology-forcing and that sophisticated technologies would be required, and thus, that the first two eligibility criteria were likely met. However, we concluded at the time that it was too early to determine the likelihood of a technological laggard, and further, that it was not necessary to attempt to make such a judgement at that time. Now we are a year closer to implementation of the 2004 standards, and manufacturers have not revoked their claims that the likelihood of a technological laggard is high. The fact that several engine manufacturers as well as a major trade organization have indicated they believe a technological laggard is likely to develop is an important indicator for the Agency regarding the technological laggard criteria.

Based on this information, the Agency believes it is reasonable to conclude that a technological laggard is likely to develop for the 2004 NMHC+NO_X standards.

B. NCP Eligibility: Emission Standards for Which NCPs are Not Proposed

1. Heavy-Duty Gasoline Standards

In a final rule published on October 6, 2000 (65 FR 59896), EPA established more stringent emission standards for all heavy-duty gasoline (or ''Otto-cycle'') vehicles and engines. These standards took two forms: A chassis-based set for complete vehicles under 14,000 pounds GVWR (the chassis-based program), and an engine-based set for all other Otto-cycle heavy-duty engines (the engine-based program). Each of the two programs has an associated averaging, banking, and trading (ABT) program. The new standards generally take effect starting with the 2005 model year, but manufacturers are provided with two additional options for early compliance, each of which provides additional flexibility relative to the 2005 model year compliance option.

We have considered the potential need for NCPs to be provided for the new standards applicable to Otto-cycle heavy-duty engines and vehicles, and have concluded at this time that NCPs are not required for any of these standards. We recognize that in general these new standards represent an increase in stringency over the prior federal standards, and thus, that the first criterion for NCP eligibility is satisfied. While some additional work is likely required to meet these new standards, the second and third eligibility criteria are not satisfied.

With respect to the chassis-based standards, manufacturers will largely be using vehicles already certified to California standards to meet the federal requirements. The new federal chassis-based standards effectively extend the current California medium-duty vehicle standards to a nationwide basis. California began requiring some vehicles to meet these standards in 1998, and the phase-in reached completion in the 2001 model year. Thus, manufacturers will be producing a fleet of vehicles for California that meets the new federal chassis-based requirements several years prior to having to introduce the vehicles on a nationwide basis. The technology required to meet the new federal standards has therefore already been successfully demonstrated on this class of vehicles, and manufacturers have up to several additional years to further develop and improve these systems prior to introducing them nationwide. Therefore, for vehicles required to meet the chassis-based standards, we do not believe that substantial work, as described above, will be necessary to meet the new standards. For similar reasons, as well as the fact that manufacturers have not raised the possibility of requiring NCPs, we do not believe that a technological laggard is likely to develop for this class of vehicles.

Vehicles meeting the new engine-based standards will generally be employing more advanced versions of technologies that are currently in use, such as advanced catalytic converters and closed loop electronic control of the air-fuel ratio. All heavy-duty Otto-cycle engines are already equipped with three-way catalysts, and some recently introduced engines featuring precise air/fuel control and superior catalyst designs have been certified at levels below the most stringent standards included under the three optional compliance programs. In fact, the level of the engine-based standard under the optional programs that manufacturers are likely to select (1.5 grams per brake-horsepower-hour) is consistent with the recommendations of two manufacturers providing comment on the rule. Given these factors, we do not believe that a technological laggard is likely to emerge. Thus, for vehicles required to meet the engine-based standards, we do not believe that substantial work, as described above, will be necessary to meet the new standards.

In addition, the three compliance options that we included in the rule were developed through discussions with manufacturers, and based on those discussions we believe that these options are viable options that provide a range of choices and offer manufacturers flexibility to fit the program with their product planning. Due to the availability of these options and the discussions with manufacturers, we do not believe that a technological laggard is likely to develop with respect to any of the new Otto-cycle heavy-duty vehicle or engine standards. The ABT programs also offer considerable additional flexibility to meet the new standards.

In conclusion, based on the factors described above, we do not believe that there is sufficient evidence at this time that either substantial work is required to meet the new standards or that a technological laggard is likely to develop. Therefore, we are not proposing NCPs for any of the Otto-cycle heavy-duty emission standards.

2. 2004 Tier 2 Medium-duty Passenger Vehicles & Heavy Light-duty Trucks

In December 1999, EPA promulgated a new set of emission control requirements for heavy-duty vehicles with a GVWR between 6,001 and 10,000 lbs. (See 65 FR 6698, February 10, 2000). These requirements were implemented as part of EPA's Tier 2 vehicle emission control program. Beginning in 2004, heavy light-duty trucks (HLDTs) and medium-duty passenger vehicles (MDPVs) are combined in an averaging set which must meet a fleet average NO_X emission standard of 0.20 g/mi. The program phases in at 25/50/75/100% of each years sales over the period 2004–2007. Those not included in this fleet average

[3] See EPA Air Docket A–98–32, comments from Navistar (item IV–D–29), Mack Truck (IV–D–06), Detroit Diesel Corp. (IV–D–28), and EMA (IV–D–05).

must meet the current standards. This is referred to as the interim program. Beginning in 2008, the fleet must average 50% at 0.20 g/mi NO_X and the remaining 50% at 0.07 g/mi NO_X on average. And, by 2009 the fleet must average 0.07 g./mi NO_X. This is referred to as the Tier 2 program. This fleet average includes all covered vehicles without regard to fuel-type or combustion cycle. To be considered as part of the average, vehicle families must certify to NO_X, NMOG, CO, HCHO, and PM standards in one of a number of the emission ''bins.'' There are 11 bins available for the interim program and eight for the Tier 2 program. In order for a family to qualify for the program it need only be able to certify in the top bin of each program.

EPA believes that NCPs are not necessary for either the interim or Tier 2 programs applicable to HLDTs and MDPVs. While the standard will be more difficult to meet, it does not involve ''substantial work'' as defined in the regulation and discussed above, nor does EPA expect there to be a ''technological laggard.'' The technology needed to meet these standards is well understood now, and, as discussed in the rulemaking, there are already a number of vehicle families capable of meeting the requirements. To enable this technology further, EPA has promulgated fuel quality requirements for gasoline and diesel fuel aimed at substantially reducing sulfur content and thus enabling highly efficient aftertreatment technology.

Beyond that, these programs are constructed with a phase-in, which means that there is ample opportunity for technological development with the potentially more difficult vehicle configurations deferrable until the final year of each program's phase-in. Furthermore, the programs are based on fleet average standards independent of fuel or combustion cycle and do not limit emission standards to the fleet average. In order to be certified, a vehicle family need only qualify in one of the emission bins. For the interim and Tier 2 programs there are three bins above the average. Generally, the top bin in the interim program was constructed such that current technology vehicles could qualify. The top bin of the Tier 2 program was set at the fleet average value of the interim program.

The program also includes a number of flexibilities designed to enhance compliance. These include a provision to allow the generation of credits through early banking, manufacturer-developed alternative phase-in schedules, deficit carryforward for the fleet average, and a number of technology phase-in flexibilities such as in-use standards and alternative certification test-cycles.

In conclusion, given the significant flexibilities and options contained in the Tier 2 rule, we are not proposing NCPs for 2004 and later model year HLDTs or MDPVs.

III. Penalty Rates

This proposed rule is the most recent in a series of NCP rulemakings. The discussion of penalty rates in the Phase IV rulemaking (58 FR 68532, December 28, 1993), Phase III rulemaking (55 FR 46622, November 5, 1990), the Phase II rulemaking (50 FR 53454, December 31, 1985) as well as the Phase I rulemaking (50 FR 35374, August 30, 1985) are incorporated by reference. This section briefly reviews the penalty rate formula and discusses how EPA arrived at the penalty rates in this proposed rule.

A. Parameters

As in the previous NCP rules, we are specifying the NCP formula for each standard using the following parameters: COC_{50}, COC_{90}, MC_{50}, F, and UL. The NCP formula is the same as that promulgated in the Phase I rule. As was done in previous NCP rules, costs include additional manufacturer costs and additional owner costs, but do not include certification costs because both complying and noncomplying manufacturers must incur certification costs. COC_{50} is an estimate of the industry-wide average incremental cost per engine (references to engines are intended to include vehicles as well) associated with meeting the standard for which an NCP is offered, compared with meeting the upper limit. More precisely, the values of COC_{50} presented here are estimates of the sales weighted mean incremental cost. We request comment regarding whether it would be more appropriate to set COC_{50} equal to the 50th percentile costs of compliance (i.e., median) instead of the mean costs. Commenters supporting the use of the median costs should address whether such an approach would reveal confidential business information.

COC_{90} is EPA's best estimate of the 90th percentile incremental cost per-engine associated with meeting the standard for which an NCP is offered, compared with meeting the associated upper limit. MC_{50} is an estimate of the industry-wide average marginal cost of compliance per unit of reduced pollutant associated with the least cost effective emission control technology installed to meet the new standard. MC_{50} is measured in dollars per g/bhp-hr for HDEs. F is a factor used to derive MC_{90}, the 90th percentile marginal cost of compliance with the NCP standard for engines in the NCP category. MC_{90} defines the slope of the penalty rate curve near the standard and is equal to MC_{50} multiplied by F. UL is the upper limit above which no engine may be certified. UL is specified for each of the four service classes for which NCPs are being proposed.

The derivation of the proposed cost parameters is described in a support document entitled ''Draft Technical Support Document: Nonconformance Penalties for 2004 Highway Heavy-Duty Diesel Engines,'' which is available in the public docket for this rulemaking. All costs are presented in 2001 dollars. Because we are trying to account for cost differences at the point of sale, all costs were converted to net present value (NPV) for calendar year 2004 using a discount rate of 7.0 percent. The upper limits applicable to a pollutant emission standard are described in the following section.

We requested cost information from several of the engine manufacturers for each engine model that they plan to produce for model year 2004. We used these estimates along with all other available information to estimate the average and 90th percentile compliance costs. However, as we have in previous NCP rules, we relied heavily on the manufacturers' projections of their own costs, especially for fixed, hardware, and warranty costs. We request comment on the availability of other data to estimate these costs on a manufacturer-specific basis.

It is important to note that this analysis differs from the analyses for the model year 2004 standard-setting rulemakings in three basic ways:

(1) The goal of this analysis is to estimate manufacturer and operator costs during the first year of the new standards rather than to project the long-term costs.

(2) The baselines for calculation of compliance costs differ significantly due to issues associated with the Consent Decrees.

(3) We now have more detailed information about costs identified in the earlier analysis, as well as cost categories not previously included.

Thus, the costs estimated here are not comparable to the estimates described in the standard-setting rulemakings. These differences are discussed in detail in Chapter 3 of the Draft Technical Support Document for this rulemaking, and only a summary will be presented here.

First, it is necessary for this NCP analysis to focus solely on the compliance costs associated with the first year of production, while standard-

setting analyses require a longer term view. This is most significant with respect to the costs associated with hardware, reliability (warranty, repairs, and associated costs), and fuel consumption. Manufacturers often make significant progress in reducing these costs with additional time.

Second, as is discussed in Section III(A)(1) of this preamble, the engine designs currently produced and sold under the Consent Decrees lead us to propose an Upper Limit value of 6.0 g/bhp-hr NMHC+NO_X, for the heavy-heavy duty service class, which fundamentally changes the cost analysis. The penalty rate factors are based on the compliance costs associated with lowering the emissions from model year 2001 engines to the 2004 standard. For heavy-heavy duty engines the NCPs are therefore based on the compliance costs associated with lowering the emissions from 6.0 g/bhp-hr NMHC+NO_X to the 2004 standard of 2.5g/bhp-hr NMHC+NO_X. This analysis was not performed in the standards-setting rules, and therefore the costs estimates in the standard-setting rule and this NCP proposal are not comparable. For the standard-setting rules, we estimated the compliance costs associated with bringing an engine which meets the current NO_X standard of 4.0 g/bhp-hr into compliance with the 2.5g/bhp-hr NMHC+NO_X. Even for the other service classes, where we have proposed an Upper Limit based directly on the 4.0 g/bhp-hr NO_X standard, the impact on engine designs of the alleged defeat device strategies used by a number of engine manufacturers over the past decade makes comparison between the standard-setting rule cost analysis and this analysis difficult.

Finally, for this NCP proposal we have received new information since the standard-setting FRMs. This included more detailed estimates of actual manufacturer costs, plus data on a few additional cost items which were not part of the standards-setting rulemaking analysis. Specifically, we have included new cost items for vehicle manufacturer costs, post-warranty repairs, and revenue impacts (lost revenue due to the increased weight of the engine and the loss in freight capacity). We did not have this information during the standard-setting rule. As a result of the three factors summarized above, the costs estimated in this NCP proposal are not directly comparable to the estimates described in the standard-setting rulemakings.

The significance of the various cost categories varied with service class. For example, the largest costs for light-heavy duty were hardware costs, while fuel costs were relatively low. However, for heavy-heavy duty, the fuel costs represent about half of the total cost of compliance.

1. Upper Limit

The upper limit is the emission level established by regulation above which NCPs are not available and a heavy duty engine cannot be certified or introduced into commerce. CAA section 206(g)(2) refers to the upper limit as a percentage above the emission standard, set by regulation, that corresponds to an emission level EPA determines to be ''practicable.'' The upper limit is an important aspect of the NCP regulations not only because it establishes an emission level above which no engine can be certified, but it is also a critical component of the cost analysis used to develop the NCP factors. The regulations specify that the relevant NCP costs for determining the COC_{50} and the COC_{90} factors are the difference between an engine at the upper limit and one that meets the new standards (*see* 40 CFR 86.1113–87).

The regulatory approach adopted under the NCP rules sets the Upper Limit (UL) at the prior emission standard when a prior emission standard exists and that standard is changed and becomes more stringent. EPA concluded that the UL should be reasonably achievable by all manufacturers with vehicles in the relevant class. It should be within reach of all manufacturers of HDEs or HDVs that are currently allowed so that they can, if they choose, pay NCPs and continue to sell their engines and vehicles while finishing their development of complying engines. A manufacturer of a previously certified engine or vehicle should not be forced to immediately remove an HDE or HDV from the market when an emission standard becomes more stringent. The prior emissions standard meets these goals, because manufacturers have already certified their vehicles to that standard.

EPA also concluded that the prior emission standard is the appropriate upper limit when an emission standard is tightened by operation of another standard. EPA recognized that the previous standard would not necessarily represent the level that is reasonably achievable by all manufacturers with engines in the relevant class, but in practice the prior standard should be achievable in almost all cases. EPA rejected a suggestion that the upper limit, in such cases, should be more stringent than the prior emission standard, because it would be very difficult to identify a limit that would be within reach of, and could be met by, all manufacturers.

In this case, the new standard is a limit on the combination of NO_X+NMHC, while the prior regulatory standards are separate limits, one for NO_X and one for total HC. For a large portion of the industry, there are also emissions limits set under judicial Consent Decrees, many of which vary from the regulatory standards, in particular for the heavy-heavy service class as discussed latter in this section. In this situation, there is no simple way to determine the appropriate prior emission standard to use as an Upper Limit. One option would be to add the current NO_X and HC standards together, resulting in a 5.3 NO_X+NMHC standard. Another option would recognize that the HC standard has resulted in emissions of NMHC that are generally at 0.5 or below, producing NO_X+NMHC levels consistent with a standard of 4.5 for engines meeting a 4.0 g/bhp-hr NO_X standard. If there were no Consent Decree emissions limits, and the entire industry was already operating at these levels, a 4.5 standard would be more consistent with the policy and purposes of 40 CFR 86.1104–91, the general regulatory provision addressing Upper Limits. A NO_X+NMHC standard of 5.3 would in effect allow for increases in NO_X above the current regulatory emissions standards, because there is no reason to expect NMHC levels would increase above 0.5. The UL is designed to allow continued production of current engines, but not to allow backsliding.

EPA also considered the CD emissions limits in this analysis, as they establish legally binding requirements on the manufacturers that directly affect the way engine manufacturers design their engines. In many cases it is the CD limits, and not the regulatory standards, that are the controlling factor and dictate the level of emissions control required on engines produced during the term of the Decrees. Since the role of an NCP is to address the real world problems associated with a transition from a prior emissions requirement to a new more stringent requirement, it is appropriate to take the CD requirements into account where the levels required under the CD are in fact the controlling factor in establishing the prior level of control.

For light heavy-duty, medium heavy-duty, and urban bus engines, the CD requirements are consistent with the regulatory requirements for FTP standards and the defeat device prohibition. Manufacturers are currently certifying to the emissions levels provided under the CD. An examination

of model year 2001 certification data shows that for both CD and non-CD engine manufacturers, engines are generally being certified with HC emissions below 0.3 g/bhp-hr, and no engines in these service classes certified to the 4.0 g/bhp-hr NO_X standard have a combined NO_X plus HC emission level greater than 4.5 g/bhp-hr.[4] Hence, an UL of 4.5 NO_X+NMHC on the FTP would be most consistent with the policy approach embodied in 40 CFR 86.1104–91.

For heavy heavy-duty engines, however, the CD provides a significantly different approach. For these engines, limits are set for Euro III and NTE levels that allow for significantly higher emissions off the FTP than EPA would expect to allow under the defeat device prohibition. While the FTP standard under the CD is the same as in the regulations, it is the level of off-cycle control that drives the design requirements for the engine manufacturers. They are the legal requirements that drive the level of control embodied in the engine design. Model year 2001 certification data shows that combined HC and NO_X emissions for these engines are at or below 6.0 g/bhp-hr when measured using the Euro III test.[5]

This NCP rulemaking focuses on technological laggards, which would be those heavy-duty engines that need more lead time to comply with the 2004 NO_X+NMHC standard. For heavy heavy-duty engines, the prior actual level of control that they are now achieving and certifying to is driven by the CD levels. As such, an UL at the level of control required under the CD would set a level that is within the reach of all such manufacturers, including the technological laggards. It would be reasonably achievable by all manufacturers in this class, and would avoid forcing the technical laggards to remove an engine from the market when the 2004 emissions standards go into effect. This UL would be consistent with the policy embodied in the NCP regulations.

EPA recognizes that under the CD this group of heavy-duty engines is also required to achieve the 2004 emissions levels by October 2002. However, as discussed before, EPA has determined that there is likely to be a technological laggard for purposes of meeting this standard in 2004. The prior deadline in the CD does not change this determination, and means only that such manufacturers would also be subject to the constraints in the CD, including its compliance and enforcement provisions. EPA also recognizes that the CD calls for compliance with a 4.0 NO_X standard on the FTP with a 6.0 NO_X standard for the Euro III, and the UL we are proposing is for the FTP. Setting the UL at 6.0 NO_X+NMHC for the FTP would be expected to allow continued production of engines with NO_X at their CD levels, as the Euro III levels would not be expected to raise serious concerns about compliance with the defeat device prohibition.

EPA also considered an UL or 4.5 or 5.3 for the heavy heavy-duty engines An UL of 4.5 NO_X +NMHC would significantly reduce the level of off-cycle emissions for these engines, but would do it by requiring significant design changes at the same time design work is underway to meet the 2.5 standard. It is questionable whether there is adequate lead time to accomplish this in time for 2004 model year, and it is not consistent with the policy underlying the NCP regulation concerning ULs. In addition, the majority of the heavy-heavy cost numbers obtained by EPA from industry involved bringing an engine to compliance from the CD levels to the 2004 levels, and not for reducing from some third level to the 2004 levels. EPA does not believe it could readily develop the cost figures for such a development phase. An UL of 5.3 NO_X+NMHC would involve a hybrid of these two options—it would involve some change from the CD levels, but less of a change than going to the 4.5 level.

Of the three possible ULs for heavy heavy-duty engines, EPA believes that 6.0 NO_X+NMHC is most consistent with the policy approach embodied in 40 CFR 86.1104–91. The cost calculation in this proposal are based on this as the UL. However, EPA invites comment on using an UL of either 5.3 or 4.5 NO_X+NMHC, including information on the technology such an engine would use to comply with either 5.3 or 4.5, as well as the costs associated with these options.

2. Parameter Values

We propose that the values in Table 1 (in 2001 dollars) be used in the NCP formula for the 2004 and later model year NMHC+NO_X standard of 2.5 g/bhp-hr for diesel heavy-duty engines and diesel urban bus engines at full useful life. The derivation of these parameters is described in the Draft Technical Support Document for this rulemaking. We request comment on our estimates of these parameters.

[4] EPA Memorandum ''Summary of Model Year 2001 Heavy-duty Diesel Engine HC and NO_X Certification Data'', copy available in the docket for this rulemaking.

[5] EPA Memorandum ''Summary of Model Year 2001 Heavy-duty Diesel Engine HC and NO_X Certification Data'', copy available in the docket for this rulemaking.

TABLE 1.—PROPOSED NCP CALCULATION PARAMETERS

Parameter	Light heavy-duty diesel engines	Medium heavy-duty diesel engines	Heavy-duty diesel engines	Urban bus engines
COC_{50}	$1,080	$3,360	$8,940	$4,400.
COC_{90}	$2,610	$6,870	$14,790	$7,120.
MC_{50}	[1] $2,000	[1] $1,800	[1] $7,200	[1] $4,900
F	1.3	1.3	1.3	1.3
UL	[1] 4.5	[1] 4.5	[1] 6.0	[1] 4.5

[1] Per gram per brake-horsepower-hour.

3. Penalty Curves

The calculation parameters listed in Table 1 are used to calculate the penalty rates for each heavy-duty service class. These parameters are used in the penalty rate formulas which are defined in the existing NCP regulations (See 40 CFR 86.1113(a)(1) and (2)). Using the parameters in Table 1, and the equations in the regulations, we have plotted penalty rates versus compliance levels for each service class in Figures 1–4 below. These penalty curves are for the first year of use of the NCPs, that is, the annual adjustment factors specified in the regulations have been set equal to one.

BILLING CODE 6560–50–P

Figure 1: Light-heavy Penalty Curve

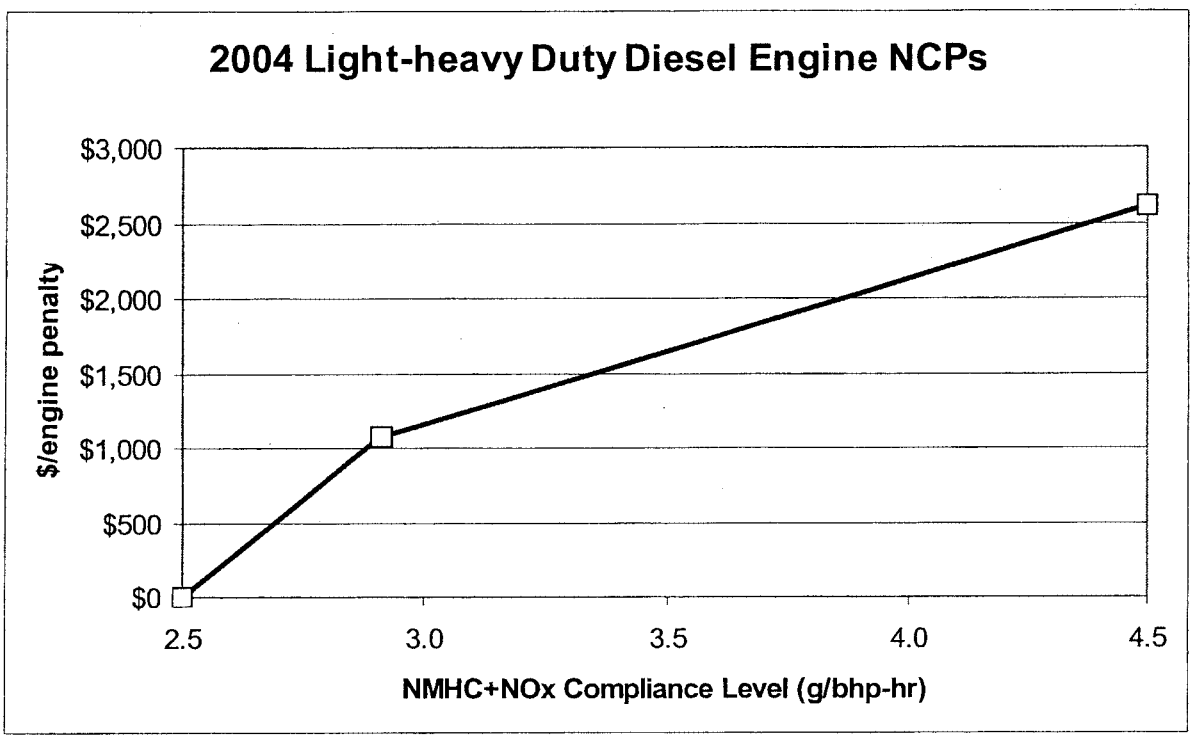

Figure 2: Medium-heavy Penalty Curve

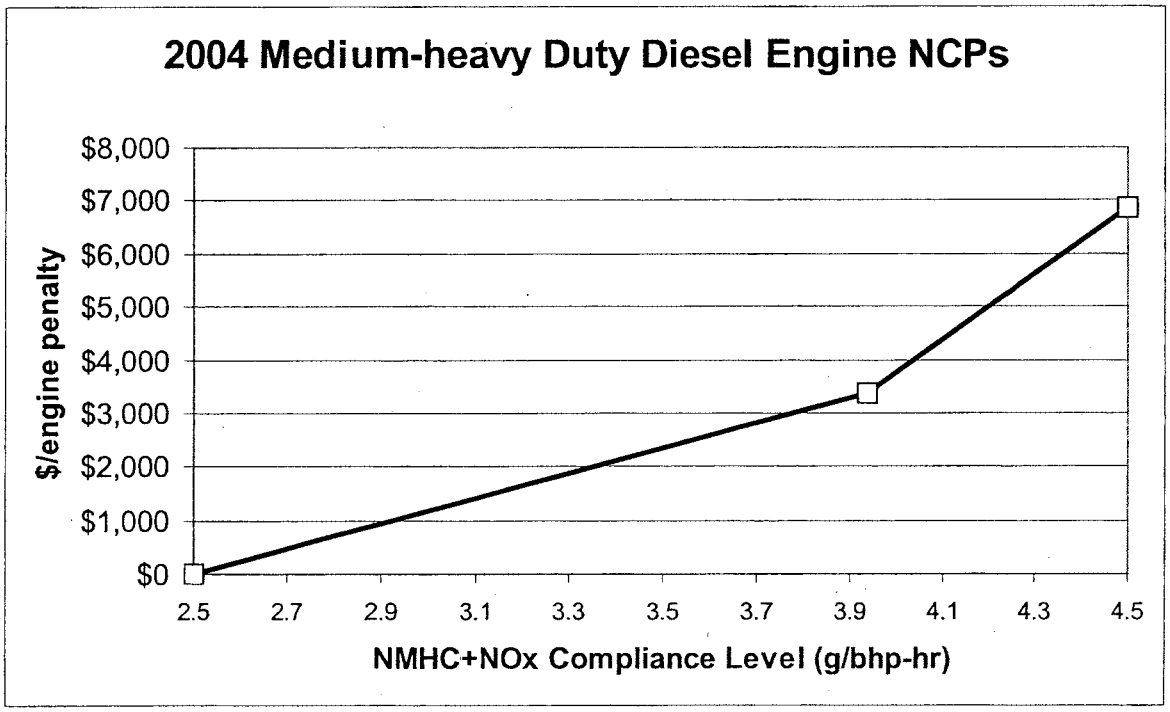

Figure 3: Heavy-heavy Penalty Curve

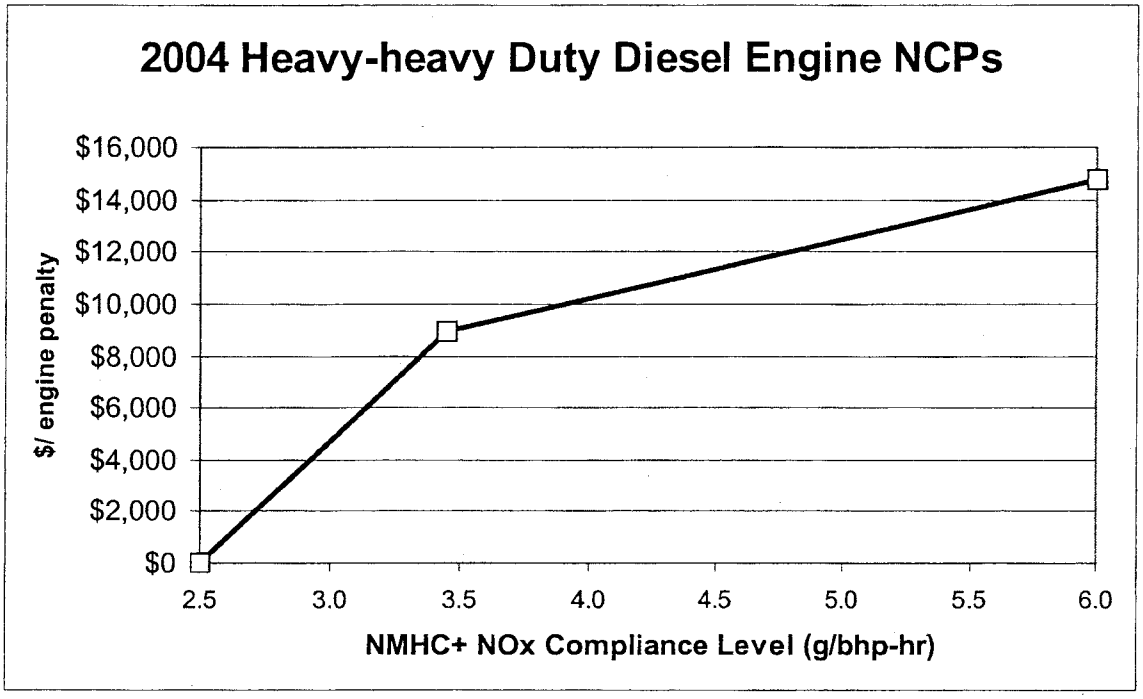

Figure 4: Urban Bus Penalty Curve

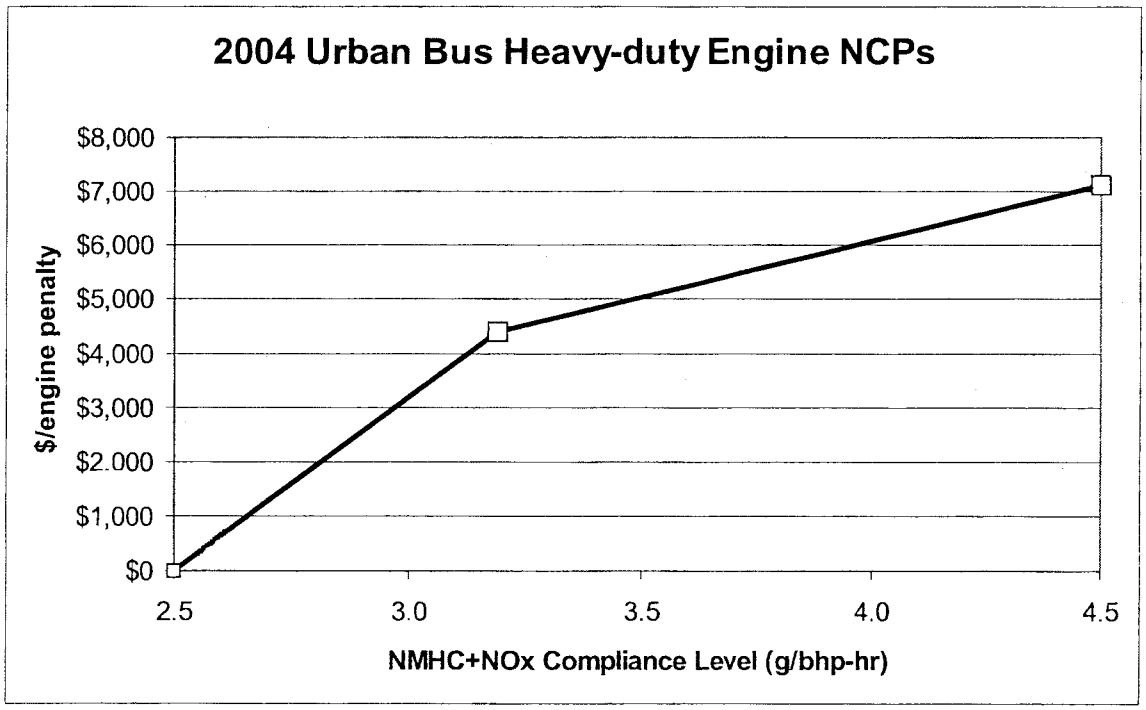

BILLING CODE 6560–50–C

B. Issues and Alternatives

The Clean Air Act requires EPA to set the NCPs ''to remove any competitive disadvantage to manufacturers whose engines or vehicles achieve the required degree of emission reduction''. The analysis presented in detail in the Draft Technical Support Document deals with an assessment of the cost of compliance, using essentially the same methodology that has historically been used to establish NCPs. We believe that our estimates of the costs are appropriate and that the methodology is sound. In establishing prior NCP rules, we have frequently made it clear that satisfying the statutory objective of protecting the complying manufacturer was paramount.

The NCP generic rule establishes an approach which attempts to remove any competitive disadvantage to complying manufacturers by assessing a cost to the manufacturer of a non-complying engine in the form of an NCP, with the expectation that this cost is at least equivalent to or exceeds the value of the competitive benefit gained by building a noncomplying engine. Imposing such a cost is a way to level the playing field without interfering in the actual marketing or pricing of the engines. The problem here is that for some factors it is hard to quantify with certainty the value of this competitive benefit, and EPA is concerned that the calculation may not remove all competitive disadvantages.

1. Purchaser Perception Effects on Competition

A manufacturer of a non-complying engine generally gains a competitive advantage or benefit of two types. The first typically involves production expenses saved by not producing a complying engine, such as fixed costs, hardware costs, and the like. The second category involves, in some cases, the competitive benefits gained by producing an engine that has better performance characteristics compared to a complying engine, including reduced operating expenses for the purchasers of noncomplying engines. In addition, manufacturers may realize a reduced number of warranty claims by producing current technology noncomplying engines.

The first category is easier to quantify, as it involves considering costs directly incurred by the industry, and it is generally easier to get a fuller quantification of amounts in categories such as hardware costs. The second category is much harder to quantify with certainty. For example, as discussed below with respect to fuel economy, the actual amount of savings to the operator will vary based on several factors. An even harder to quantify competitive advantage is the benefit in the marketplace from producing an engine that is, or may be perceived to perform better, such as being more durable or reliable, and thus less prone to malfunction or breakdown. Including the cost of warranty claims and related expenses for the new technology engines in the NCP is one way to take into consideration the expected durability of complying engines. Including this cost helps to level the playing field with respect to this increased cost experienced by manufacturers of complying engines. This cost component of the NCP is therefore like the costs in the first category—out of pocket expenses experienced by complying manufacturers that a non-complying manufacturer might otherwise avoid.

There is significant uncertainty as to whether warranty and related costs in the NCP calculation fully reflect the competitive benefit gained in the marketplace by a non-complying engine. This competitive benefit could readily be greater than the out-of-pocket warranty expenses paid by the manufacturer of a complying engine. For example, non-complying engines may be either perceived or may in fact be more reliable during the early years of the transition to the new technology engines. This difference in performance gives a competitive advantage to producers of noncomplying engines. In order to remove this advantage, the cost of an NCP needs to account for the marketplace value of this difference in performance.

However, it is hard to quantify this value with certainty. For example it is hard to quantify in dollar terms the value purchasers will attribute to a real or perceived difference in durability or reliability. There is little real world experience with the new technology engines; hence it will be hard for a purchaser to judge with certainty the actual difference in reliability and the increased costs associated with it. It is also unlikely that the dollar amount of a warranty claim would fully reflect the loss in value expected from a malfunction or breakdown. The purchaser experiences both the repair expenses as well as down time for their equipment, disruption of their business, and other potential adverse impacts, which may not be fully covered by payment of a warranty claim. Especially where there is little historical evidence to rely on regarding a new technology, there may be significant uncertainty concerning the reliability of new technology engines when they are first introduced, and the value a purchaser places on the proven reliability of an older technology engine may therefore be magnified. While this proposal includes costs related to downtime and demurrage expenses during warranty repairs in the NCP, it is not clear how, as part of a business decision, the engine purchasers will trade-off higher purchase costs for the noncomplying engine versus the uncertainty of the reliability and durability of the new technology.

This is potentially a significant issue in this action because there is reason to believe that manufacturers may choose to make extensive use of NCPs and continue to produce pre-2004 technology engines. As has been the case in past NCP rules, where a noncomplying manufacturer does essentially nothing in terms of new technology (i.e., produces an upper limit engine), it must pay an NCP based on COC_{90}. The noncomplying manufacturer would then raise prices on its engines to levels comparable to those for complying engines in order to be able to capture back at least part of that NCP (the portion related to first price increase). The noncomplying manufacturer may even be able to charge a premium (relative to the first price increase of the complying manufacturer) if the engine purchaser perceives its ''old technology'' engine to be more desirable than the relatively unproven new technology engine.

Thus, in summary, we have three related factors affecting the issue of whether the proposed NCP would remove competitive disadvantage (purchase price, operating cost, purchaser perception). Even with an NCP set at a level which addresses quantifiable cost differences between complying and non-complying engines, in the eyes of the purchaser there still may be an advantage to paying the higher first cost for an engine (including the NCP) with known performance.

It is difficult to establish the degree to which the NCP calculation discussed above will fully remove any competitive advantage for non-compliers attributable to purchaser perception. Therefore, EPA is requesting comment on whether there is an additional factor that should be included in the NCP calculation and on methods to value these potential performance advantages. If engine purchaser perception favors noncomplying engines, this affects market share and thus business viability, per engine amortized fixed costs, and overall profitability. Therefore, we are considering adding a factor to the NCP formula to address

such an advantage if it exists, and there is an appropriate way to quantify it. Conceptually, such a factor would need to be equal to the purchase price difference at which a potential purchaser would be indifferent between purchasing a complying and non-complying engine, after accounting for all of the factors that are currently included in the proposed NCP calculation (e.g., fuel costs, maintenance, warranty, demurrage, and the revenue impact of additional engine weight. These factors are discussed in more detail in the draft Technical Support Document for this proposal. EPA requests comment on whether such an additional factor is needed here and if so what is the appropriate means to implement this adjustment. Commenters who believe that such a factor is appropriately included in the NCP calculation should provide an empirical and quantitative basis for calculating the appropriate level at which to set it.

2. Projected Fuel Price

One of the most significant categories of cost is the impact of the standards on fuel consumption rates. However, this cost element is difficult to estimate because actual fuel costs will vary based on the price of the fuel and on the vehicle operation. We, therefore, are requesting comment on our estimates of the economic impact of increased fuel consumption.

Fuel price varies with time and with location. According to the Energy Information Administration (EIA), the national average highway diesel fuel price in February of 1999 was 95 cents per gallon (with taxes), but in October of 2000 it was $1.67 per gallon (with taxes). That represents a 76 percent increase in the fuel price within a two year period. The average price for diesel fuel over the past five years was $1.25 per gallon. This kind of variation makes it difficult to project future prices. For our analysis, we estimated the fuel price to be $1.50 for 2004 and 2005. This is equal to the national average highway diesel fuel price for last year. We are requesting comment on the use of the five-year average price of $1.25 per gallon. Our analysis projects that fuel costs will be five cents per gallon higher after 2005 to account for the additional cost of the very low sulfur fuel that will be required beginning in 2006. This would also be true if we started with the five-year average price instead of the 2000 price. Given the difficulty in projecting future fuel prices, we are also requesting comments on the concept of adjusting the NCP based on price of diesel fuel. This could be done in two ways. First, we could adjust the NCP by regulation before the beginning of the 2004 model year if we determine that the fuel price used to determine the NCP inputs is no longer appropriate. Second, we could finalize in this rulemaking a regulatory provision that makes COC_{50}, COC_{90} and MC_{50} functions of the national average highway diesel fuel price in the preceding year (or preceding five years). This would be similar to the use of the Consumer Price Index to adjust the penalties for inflation (see 40 CFR 86.113–87(a)(4). The NCP could be adjusted ''automatically'' using the latest EIA estimate of national average highway diesel fuel price, or some other independent estimate.

In addition, at any given time, fuel prices before taxes can vary regionally by as much as ±10 percent from the national average. This is compounded by differences in state taxes, which vary from 8 to 29 cents per gallon. This regional variability is potentially significant for our 90th percentile analysis. Some trucks may operate locally in an area that has fuel prices significantly higher than the national average. However, we believe that the number of these trucks will be relatively small, and thus did not include a regional fuel price component in our 90th percentile analysis. Nevertheless, we request comment on this issue.

Another important factor in estimating fuel cost is how much fuel a model year 2004 vehicle will use over its lifetime. This is most important for heavy-heavy duty engines. Some vehicles may be scrapped after their useful life (435,000 miles) while others may be rebuilt more than once and not be scrapped until after 2 million miles. Thus, the fuel cost could vary by a factor of four from one vehicle to another. The mileage estimates that we used in our analysis are shown in the table below. You should read the Draft Technical Support Document for more information about how we used these mileage estimates.

ESTIMATES OF LIFETIME VEHICLE MILES TRAVELED (VMT) USED IN COST ANALYSIS

	VMT for average vehicle	VMT used for COC_{90} analysis
Light Heavy	209,000	280,000
Medium Heavy	262,000	343,000
Heavy Heavy	767,000	1,000,000

Finally, our methodology for calculating the cost of changes in fuel consumption uses estimates of average miles driven per gallon of fuel used. These estimates are 14.0, 8.0 and 6.0 miles per gallon (MPG) for light-, medium, and heavy-heavy duty, respectively. We used these same estimates for both the COC_{50} and COC_{90} analyses. Using different estimates could significantly change the projected costs. For a typical light-heavy duty vehicle, where we are projecting a decrease in the brake-specific fuel consumption rate, using a higher MPG rate would increase net costs for a given number of miles traveled because the fuel savings would be reduced. The opposite is true for medium- and heavy-heavy duty, where we project increases in brake-specific fuel consumption rates. For these larger engines, using a higher MPG rate would decrease net costs for a given number of miles traveled. We request comment on these MPG estimates.

3. Discount Rates

All of the compliance costs in this analysis are presented in terms of net present value (NPV) for calendar year 2004. This means that costs that occur before 2004 are adjusted upward, and costs that occur after 2004 are adjusted downward to reflect the time or opportunity value of the money involved. (i.e., discounted).

In our analysis, each manufacturer's pre-production investment costs were adjusted upward to reflect the lost opportunity cost or the cost of borrowing the capital for the investment. A manufacturer would typically seek to set its prices to recover this adjusted investment from sales within the first several years of production. We used a seven percent annual discount rate for these costs, as we have done in previous analyses for pre-production costs. EPA also used a seven percent discount rate in

Regulatory Impact Analyses for the 1997 and 2000 FRMs that established the 2004 standards. This rate is based on studies which indicate that this has been a reasonable opportunity cost of diverting private capital to support Federal regulatory objectives (See OMB Circular A–94; available at www.whitehouse.gov/omb/circulars/a094/a094.html). We request comment in whether this rate is appropriate for the opportunity costs for the period of 1998 through 2003, the time period when the 2004 model year investment is being made by the manufacturers.

The NPV analysis also requires that all in-use operating costs be adjusted downward to reflect the time value of money for future costs. More specifically, the stream of operating costs must be discounted to make them equivalent to costs incurred at the time of purchase. Truck purchasers would use this approach before purchase when comparing future operating costs of two or more engines before purchase. We used a seven percent discount rate for these costs as well. However, there is evidence in other contexts that users might apply a different discount rate than seven percent when considering future operating costs during a purchase decision. We request comment on whether there is evidence to support the application of such an alternative discount rate to operating costs in the various segments of the heavy duty engine market. Your comments in support of an alternative discount rate (a higher or lower value) should include a discussion of the supporting economic and business rationale for the alternative rate. We have included an example of the impact on the NCP parameters from using a smaller discount rate (three percent) in the draft Technical Support Document for this proposal.

IV. Economic Impact

Because the use of NCPs is optional, manufacturers have the flexibility and will likely choose whether or not to use NCPs based on their ability to comply with emissions standards. If no HDE manufacturer elects to use NCPs, these manufacturers and the users of their products will not incur any additional costs related to NCPs. NCPs remedy the potential problem of having a manufacturer forced out of the marketplace due to that manufacturer's inability to conform to new, strict emission standards in a timely manner. Without NCPs, a manufacturer which has difficulty certifying HDEs in conformance with emission standards or whose engines fail a SEA has only two alternatives: fix the nonconforming engines, perhaps at a prohibitive cost, or prevent their introduction into commerce. The availability of NCPs provides manufacturers with a third alternative: continue production and introduce into commerce upon payment of a penalty an engine that exceeds the standard until an emission conformance technique is developed. Therefore, NCPs represent a regulatory mechanism that allows affected manufacturers to have increased flexibility. A decision to use NCPs may be a manufacturer's only way to continue to introduce HDEs into commerce.

V. Environmental Impact

When evaluating the environmental impact of this proposed rule, one must keep in mind that, under the Act, NCPs are a consequence of enacting new, more stringent emissions requirements for heavy duty engines. Emission standards are set at a level that most, but not necessarily all, manufacturers can achieve by the model year in which the standard becomes effective. Following *International Harvester* v. *Ruckelshaus*, 478 F. 2d 615 (D.C. Cir. 1973), Congress realized the dilemma that technology-forcing standards were likely to cause, and allowed manufacturers of heavy-duty engines to certify nonconforming vehicles/engines upon the payment of an NCP, under certain conditions. This mechanism would allow manufacturer(s) who cannot meet technology-forcing standards immediately to continue to manufacture these nonconforming engines while they tackle the technological problems associated with meeting new emission standard(s). Thus, as part of the statutory structure to force technological improvements without driving manufacturers out of the market, NCPs provide flexibility that fosters long-term emissions improvement through the setting of lower emission standards at an earlier date than could otherwise be possible. By design, NCPs encourage the technological laggard that is using NCPs to reduce emission levels to the more stringent standard as quickly as possible.

However, we believe that the potential exists for there to be more widespread use of the NCPs proposed in this rule in comparison to prior NCPs, thus indicating the possibility for an environmental impact somewhat greater in magnitude than we have suggested in prior NCP rules. Nevertheless, we believe that any such impacts would be short-term in nature. By including an annual adjustment factor that increases the levels of the penalties, the NCP program is structured such that the incentives to produce engines that meet the standards increase year-by-year. The practical impact of this adjustment factor is that the NCPs will rapidly become an obsolete option for non-complying manufacturers. However, we have no way of predicting at this time how many manufacturers will make use of the proposed NCPs, or how many engine families would be subject to the NCP program. Because of these uncertainties we are unable to accurately quantify the potential impact the proposed NCPs might have on emission inventories, although, as stated above, any impacts are expected to be short-term in nature.

VI. Public Participation

We request comment on all aspects of this proposal. This section describes how you can participate in this process.

A. How Do I Submit Comments?

We are opening a formal comment period by publishing this document. We will accept comments for the period indicated under **DATES** above. If you have an interest in the program described in this document, we encourage you to comment on any aspect of this rulemaking. We request comment on various topics throughout this proposal.

Your comments will be most useful if you include appropriate and detailed supporting rationale, data, and analysis. If you disagree with parts of the proposed program, we encourage you to suggest and analyze alternate approaches to meeting the air quality goals described in this proposal. You should send all comments, except those containing proprietary information, to our Air Docket (see **ADDRESSES**) before the end of the comment period.

If you submit proprietary information for our consideration, you should clearly separate it from other comments by labeling it ''Confidential Business Information.'' You should also send it directly to the contact person listed under **FOR FURTHER INFORMATION CONTACT** instead of the public docket. This will help ensure that no one inadvertently places proprietary information in the docket. If you want us to use your confidential information as part of the basis for the final rule, you should send a non-confidential version of the document summarizing the key data or information. We will disclose information covered by a claim of confidentiality only through the application of procedures described in 40 CFR part 2. If you don't identify information as confidential when we receive it, we may make it available to the public without notifying you.

B. Will There Be a Public Hearing?

We will hold a public hearing in the Washington, DC area on February 15, 2002. The hearings will start at 10:00 am and continue until everyone has had a chance to speak.

If you would like to present testimony at a public hearing, we ask that you notify the contact person listed above at least ten days before the hearing. You should estimate the time you will need for your presentation and identify any needed audio/visual equipment. We suggest that you bring copies of your statement or other material for the EPA panel and the audience. It would also be helpful if you send us a copy of your statement or other materials before the hearing.

We will make a tentative schedule for the order of testimony based on the notifications we receive. This schedule will be available on the morning of each hearing. In addition, we will reserve a block of time for anyone else in the audience who wants to give testimony. We will conduct the hearing informally, and technical rules of evidence won't apply. We will arrange for a written transcript of the hearing and keep the official record of the hearing open for 30 days to allow you to submit supplementary information. You may make arrangements for copies of the transcript directly with the court reporter.

VII. Administrative Requirements

A. Regulatory Planning and Review: Executive Order 12866

Under Executive Order 12866 (58 FR 51735, Oct. 4, 1993), the Agency is required to determine whether this regulatory action would be ''significant'' and therefore subject to review by the Office of Management and Budget (OMB) and the requirements of the Executive Order. The order defines a ''significant regulatory action'' as any regulatory action that is likely to result in a rule that may:

- Have an annual effect on the economy of $100 million or more or adversely affect in a material way the economy, a sector of the economy, productivity, competition, jobs, the environment, public health or safety, or State, local, or tribal governments or communities;
- Create a serious inconsistency or otherwise interfere with an action taken or planned by another agency;
- Materially alter the budgetary impact of entitlements, grants, user fees, or loan programs or the rights and obligations of recipients thereof; or,
- Raise novel legal or policy issues arising out of legal mandates, the President's priorities, or the principles set forth in the Executive Order.

Pursuant to the terms of Executive Order 12866, OMB has notified EPA that it considers this a ''significant regulatory action'' within the meaning of the Executive Order. EPA has submitted this action to OMB for review. Changes made in response to OMB suggestions or recommendations will be documented in the public record. This regulation is intended to assist manufacturers that are having difficulty developing and marketing vehicles which comply with the 2004 NMHC+NO_X standard for diesel heavy-duty engines and heavy-duty vehicles. Without this proposed rule, a manufacturer experiencing difficulty in complying with this new emission standard (after the use of credits) has only two alternatives: fix the non-conforming engines for the associated model years or not sell them at all. NCPs provide manufacturers with additional time to bring their engines into conformity. In addition, NCPs are calculated to deprive non-conforming manufacturers of any cost savings and competitive advantages stemming from marketing a non-conforming engine. Thus, NCPs will not have significant adverse effects on competition, employment, investment, productivity, innovation or on the ability of United States-based enterprises to compete with foreign-based enterprises in domestic or export markets.

B. Regulatory Flexibility Act, as Amended by the Small Business Regulatory Enforcement Fairness Act of 1996 (SBREFA), 5 U.S.C. 601 et. seq.

The Regulatory Flexibility Act (RFA) generally requires an agency to prepare a regulatory flexibility analysis of any rule subject to notice and comment rulemaking requirements under the Administrative Procedure Act or any other statute unless the agency certifies that the rule will not have a significant economic impact on a substantial number of small entities. Small entities include small businesses, small organizations, and small governmental jurisdictions.

For purposes of assessing the impacts of today's rule on small entities, small entity is defined as: (1) A small business that has no more than 1,000 employees; (2) a small governmental jurisdiction that is a government of a city, county, town, school district or special district with a population of less than 50,000; and (3) a small organization that is any not-for-profit enterprise which is independently owned and operated and is not dominant in its field.

After considering the economic impacts of today's proposed rule on small entities, I certify that this action will not have a significant economic impact on a substantial number of small entities. This proposed rule will not impose any requirements on small entities. The non-conformance penalties that would be established by this proposed rule are for emission standards that pertain to heavy-duty diesel engines. When these emission standards were established, the final rulemaking (65 FR 59895, October 6, 2000) noted that only two small entities were known to be affected. Those entities were small businesses that certify alternative fuel engines or vehicles, either newly manufactured or modified from previously certified gasoline engines. The emission standards for heavy-duty diesel engines, for which NCPs are proposed, do not pertain to the engines manufactured by these businesses.

C. Paperwork Reduction Act

The information collection requirements in this proposed rule will be submitted for approval to the Office of Management and Budget (OMB) under the *Paperwork Reduction Act,* 44 U.S.C. 3501 *et seq.* An Information Collection Request (ICR) document will be prepared and its availability for comment will be announced in a separate **Federal Register** document when the ICR is sent to OMB.

The existing regulations in 40 CFR part 86, subpart L require that manufacturers seeking NCPs annually conduct a Production Compliance Audit (PCA) for each engine configuration. This means that they must perform additional emission testing. This testing is necessary to determine more precisely the emission levels for engine configurations that exceed an applicable emission standard. While the use of NCPs is voluntary, manufacturers choosing to use them must submit the additional testing information (40 CFR 86.1106–87). Manufacturers may assert that some or all of the information provided is entitled to confidential treatment as provided by 40 CFR part 2, subpart B.

EPA has previously estimated the annual burden associated with NCPs to 906 hours and $51,786, based on a projection of six respondents per year. We estimated the average burden hours per response to 144 hours for reporting, and 7 hours for recordkeeping. Burden means the total time, effort, or financial resources expended by persons to generate, maintain, retain, or disclose or provide information to or for a Federal agency. This includes the time needed

to review instructions; develop, acquire, install, and utilize technology and systems for the purposes of collecting, validating, and verifying information, processing and maintaining information, and disclosing and providing information; adjust the existing ways to comply with any previously applicable instructions and requirements; train personnel to be able to respond to a collection of information; search data sources; complete and review the collection of information; and transmit or otherwise disclose the information.

An Agency may not conduct or sponsor, and a person is not required to respond to a collection of information unless it displays a currently valid OMB control number. The OMB control numbers for EPA's regulations are listed in 40 CFR part 9 and 48 CFR chapter 15.

D. Unfunded Mandates Reform Act

Title II of the Unfunded Mandates Reform Act of 1995 (UMRA), Public Law 104–4, establishes requirements for Federal agencies to assess the effects of their regulatory actions on State, local, and tribal governments and the private sector. Under section 202 of the UMRA, EPA generally must prepare a written statement, including a cost-benefit analysis, for proposed and final rules with ''Federal mandates'' that may result in expenditures to State, local, and tribal governments, in the aggregate, or to the private sector, of $100 million or more in any one year. Before promulgating an EPA rule for which a written statement is needed, section 205 of the UMRA generally requires EPA to identify and consider a reasonable number of regulatory alternatives and adopt the least costly, most cost-effective or least burdensome alternative that achieves the objectives of the rule. The provisions of section 205 do not apply when they are inconsistent with applicable law. Moreover, section 205 allows EPA to adopt an alternative other than the least costly, most cost-effective or least burdensome alternative if the Administrator publishes with the final rule an explanation why that alternative was not adopted.

Before EPA establishes any regulatory requirements that may significantly or uniquely affect small governments, including tribal governments, it must have developed under section 203 of the UMRA a small government agency plan. The plan must provide for notifying potentially affected small governments, enabling officials of affected small governments to have meaningful and timely input in the development of EPA regulatory proposals with significant Federal intergovernmental mandates, and informing, educating, and advising small governments on compliance with the regulatory requirements.

This proposed rule contains no Federal mandates (under the regulatory provisions of Title II of the UMRA) for State, local, or tribal governments or the private sector. The proposed rule would impose no enforceable duty on any State, local or tribal governments or the private sector.

EPA has determined that this rule does not contain a Federal mandate that may result in expenditures of $100 million or more for State, local, and tribal governments, in the aggregate, or the private sector in any one year. Because the use of NCPs is optional, manufacturers have the flexibility and will likely choose whether or not to use NCPs based on their ability to comply with emissions standards. The availability of NCPs provides manufacturers with a third alternative: continue production and introduce into commerce upon payment of a penalty an engine that exceeds the standard until an emission conformance technique is developed. Therefore, NCPs represent a regulatory mechanism that allows affected manufacturers to have increased flexibility. Thus, today's rule is not subject to the requirements of sections 202 and 205 of the UMRA.

E. Executive Order 13175: Consultation and Coordination With Indian Tribal Governments

Executive Order 13175, entitled ''Consultation and Coordination with Indian Tribal Governments'' (65 FR 67249, November 6, 2000), requires EPA to develop an accountable process to ensure ''meaningful and timely input by tribal officials in the development of regulatory policies that have tribal implications.'' ''Policies that have tribal implications'' is defined in the Executive Order to include regulations that have ''substantial direct effects on one or more Indian tribes, on the relationship between the Federal government and the Indian tribes, or on the distribution of power and responsibilities between the Federal government and Indian tribes.''

This proposed rule does not have tribal implications. It will not have substantial direct effects on tribal governments, on the relationship between the Federal government and Indian tribes, or on the distribution of power and responsibilities between the Federal government and Indian tribes, as specified in Executive Order 13175. The proposed non-conformance penalties and associated requirements for heavy-duty diesel engine manufacturers in this proposal would have national applicability, and thus would not uniquely affect the communities of Indian Tribal Governments. Thus, Executive Order 13175 does not apply to this rule.

In the spirit of Executive Order 13175, and consistent with EPA policy to promote communications between EPA and tribal governments, EPA specifically solicits additional comment on this proposed rule from tribal officials.

F. National Technology Transfer and Advancement Act

Section 12(d) of the National Technology Transfer and Advancement Act of 1995 (NTTAA), Section 12(d) of Public Law 104–113, directs EPA to use voluntary consensus standards in its regulatory activities unless it would be inconsistent with applicable law or otherwise impractical. Voluntary consensus standards are technical standards (*e.g.,* materials specifications, test methods, sampling procedures, and business practices) developed or adopted by voluntary consensus standards bodies. The NTTAA directs EPA to provide Congress, through OMB, explanations when the Agency decides not to use available and applicable voluntary consensus standards.

This proposed rulemaking does not involve technical standards. Therefore, EPA is not considering the use of any voluntary consensus standards.

EPA welcomes comments on this aspect of the proposed rulemaking and, specifically, invites the public to identify potentially-applicable voluntary consensus standards and to explain why such standards should be used in this regulation.

G. Executive Order 13045: Children's Health Protection

Executive Order 13045: ''Protection of Children from Environmental Health Risks and Safety Risks'' (62 FR 19885, April 23, 1997) applies to any rule that: (1) Is determined to be ''economically significant'' as defined under Executive Order 12866, and (2) concerns an environmental health or safety risk that EPA has reason to believe may have a disproportionate effect on children. If the regulatory action meets both criteria, the Agency must evaluate the environmental health or safety effects of the planned rule on children, and explain why the planned regulation is preferable to other potentially effective and reasonably feasible alternatives considered by the Agency.

EPA interprets Executive Order 13045 as applying only to those regulatory actions that are based on health or safety risks, such that the analysis required

under section 5–501 of the Order has the potential to influence the regulation. This proposed rule is not subject to Executive Order 13045 because it does not establish an environmental standard intended to mitigate health or safety risks.

H. Executive Order 13132: Federalism

Executive Order 13132, entitled ''Federalism'' (64 FR 43255, August 10, 1999), requires EPA to develop an accountable process to ensure ''meaningful and timely input by State and local officials in the development of regulatory policies that have federalism implications.'' ''Policies that have federalism implications'' is defined in the Executive Order to include regulations that have ''substantial direct effects on the States, on the relationship between the national government and the States, or on the distribution of power and responsibilities among the various levels of government.''

This proposed rule does not have federalism implications. It will not have substantial direct effects on the States, on the relationship between the national government and the States, or on the distribution of power and responsibilities among the various levels of government, as specified in Executive Order 13132. This proposed rule proposes to adopt non-conformance penalties for national emission standards for certain categories of motor vehicles. The requirements of the proposed rule would be enforced by the federal government at the national level. Thus, Executive Order 13132 does not apply to this rule.

In the spirit of Executive Order 13132, and consistent with EPA policy to promote communications between EPA and State and local governments, EPA specifically solicits comment on this proposed rule from State and local officials.

I. Executive Order 13211: Energy Effects

This proposed rule is not a ''significant energy action'' as defined in Executive Order 13211, ''Actions Concerning Regulations That Significantly Affect Energy Supply, Distribution, or Use'' (66 FR 28355, May 22, 2001) because it is not likely to have a significant adverse effect on the supply, distribution, or use of energy. As described in the 2000 final rule in which we affirmed the 2004 standard (65 FR 59896, Oct. 6, 2000), we have concluded that there would be no net long-term change in the fuel consumption performance of heavy-duty diesel engines as a result of the 2004 model year emission standards. However, there may be the potential for higher fuel consumption rates in the short term as diesel engine manufacturers work to balance the inherent tradeoff between control of NO_X emissions and fuel consumption. The availability of NCPs for the 2004 and later model years provides manufacturers with another option for balancing this tradeoff and working towards optimizing fuel consumption and emissions—they would be able to use NCPs to emit somewhat higher NO_X levels than they would otherwise be allowed, while at the same time avoiding undesirable fuel consumption impacts. Thus, we have concluded that this proposed rule is not likely to have any significant adverse energy effects.

J. Plain Language

This document follows the guidelines of the June 1, 1998 Executive Memorandum on Plain Language in Government Writing. To read the text of the regulations, it is also important to understand the organization of the Code of Federal Regulations (CFR). The CFR uses the following organizational names and conventions.

Title 40—Protection of the Environment

Chapter I—Environmental Protection Agency

Subchapter C—Air Programs. This contains parts 50 to 99, where the Office of Air and Radiation has usually placed emission standards for motor vehicle and nonroad engines.

Subchapter U—Air Programs Supplement. This contains parts 1000 to 1299, where we intend to place regulations for air programs in future rulemakings.

Part 86—Control of Emissions from New and In-use Highway Vehicles and Engines. Provisions of this part apply generally to highway vehicles and engines used in highway vehicles.

Each part in the CFR has several subparts, sections, and paragraphs. The following illustration shows how these fit together.

Part 86

Subpart A

Section 86.1

(a)
(b)
(1)
(2)
(i)
(ii)
(A)
(B)

A cross reference to Sec. 1048.001(b) in this illustration would refer to the parent paragraph (b) and all its subordinate paragraphs. A reference to ''Sec. 1048.001(b) introductory text'' would refer only to the single, parent paragraph (b).

List of Subjects in 40 CFR Part 86

Administrative practice and procedure, Confidential Business Information, Incorporation by reference, Labeling, Motor vehicle pollution, Reporting and recordkeeping requirements.

Dated: January 10, 2002.

Christine Todd Whitman,

Administrator.

For the reasons set forth in the preamble, chapter I, title 40 of the Code of Federal Regulations is proposed to be amended as follows:

PART 86—CONTROL OF EMISSIONS FROM NEW AND IN-USE HIGHWAY VEHICLES AND ENGINES

1. The authority citation for part 86 continues to read as follows:

Authority: 42 U.S.C. 7401–7671q.

2. Section 86.1105–87 is proposed to be amended by revising paragraph (e) and by adding paragraph (i), to read as follows:

§ 86.1105–87 Emission standards for which nonconformance penalties are available.

* * * * *

(e) The values of COC_{50}, COC_{90}, and MC_{50} in paragraphs (a) and (b) of this section are expressed in December 1984 dollars. The values of COC_{50}, COC_{90}, and MC_{50} in paragraphs (c) and (d) of this section are expressed in December 1989 dollars. The values of COC_{50}, COC_{90}, and MC_{50} in paragraph (f) of this section are expressed in December 1991 dollars. The values of COC_{50}, COC_{90}, and MC_{50} in paragraphs (g) and (h) of this section are expressed in December 1994 dollars. The values of COC_{50}, COC_{90}, and MC_{50} in paragraph (i) of this section are expressed in December 2001 dollars. These values shall be adjusted for inflation to dollars as of January of the calendar year preceding the model year in which the NCP is first available by using the change in the overall Consumer Price Index, and rounded to the nearest whole dollar in accordance with ASTM E29–67 (reapproved 1980), Standard Recommended Practice for Indicating Which Places of Figures are to be Considered Significant in Specified Limiting Values. The method was approved by the Director of the Federal Register in accordance with 5 U.S.C. 552(a) and 1 CFR part 51. This document is available from ASTM, 1916 Race Street, Philadelphia, PA 19103, and is also available for inspection as part of Docket A–91–06, located at the

Central Docket Section, EPA, 401 M Street, SW, Washington, DC or at the Office of the Federal Register, 800 North Capitol Street, NW, suite 700, Washington, DC. This incorporation by reference was approved by the Director of the Federal Register on January 13, 1992. These materials are incorporated as they exist on the date of the approval and a notice of any change in these materials will be published in the **Federal Register**.

* * * * *

(i) Effective in the 2004 model year, NCPs will be available for the following emission standard:

(1) Diesel heavy-duty engine non-methane hydrocarbon plus oxides of nitrogen standard of 2.4 grams per brake horsepower-hour (or alternatively, 2.5 grams per brake horsepower-hour with a limit on non-methane hydrocarbon emissions of 0.5 grams per brake horsepower-hour), in § 86.004–11(a)(1)(i).

(i) For light heavy-duty diesel engines:

(A) The following values shall be used to calculate an NCP in accordance with § 86.1113–87(a):

(*1*) COC_{50}: $1080.

(*2*) COC_{90}: $2610.

(*3*) MC_{50}: $2000 per gram per brake horsepower-hour.

(*4*) F: 1.3.

(*5*) UL: 4.5 grams per brake horsepower-hour; notwithstanding § 86.1104–91.

(B) The following factor shall be used to calculate the engineering and development component of the NCP for the standard set forth in § 86.004–11(a)(1)(i) in accordance with § 86.1113–87(h): 0.333.

(ii) For medium heavy-duty diesel engines:

(A) The following values shall be used to calculate an NCP in accordance with § 86.1113–87(a):

(*1*) COC_{50}: $3360.

(*2*) COC_{90}: $6870.

(*3*) MC_{50}: $1800 per gram per brake horsepower-hour.

(*4*) F: 1.3.

(*5*) UL: 4.5 grams per brake horsepower-hour; notwithstanding § 86.1104–91.

(B) The following factor shall be used to calculate the engineering and development component of the NCP for the standard set forth in § 86.004–11(a)(1)(i) in accordance with § 86.1113–87(h): 0.167.

(iii) For heavy heavy-duty diesel engines:

(A) The following values shall be used to calculate an NCP in accordance with § 86.1113–87(a):

(*1*) COC_{50}: $8940.

(*2*) COC_{90}: $14790.

(*3*) MC_{50}: $7200 per gram per brake horsepower-hour.

(*4*) F: 1.3.

(*5*) UL: 6.0 grams per brake horsepower-hour; notwithstanding § 86.1104–91.

(B) The following factor shall be used to calculate the engineering and development component of the NCP for the standard set forth in § 86.004–11(a)(1)(i) in accordance with § 86.1113–87(h): 0.067.

(iv) For diesel urban bus engines:

(A) The following values shall be used to calculate an NCP in accordance with § 86.1113–87(a):

(*1*) COC_{50}: $4400.

(*2*) COC_{90}: $7120.

(*3*) MC_{50}: $4895 per gram per brake horsepower-hour.

(*4*) F: 1.3.

(*5*) UL: 4.5 grams per brake horsepower-hour; notwithstanding § 86.1104–91.

(B) The following factor shall be used to calculate the engineering and development component of the NCP for the standard set forth in § 86.004–11(a)(1)(i) in accordance with § 86.1113–87(h): 0.136.

(2) [Reserved]

[FR Doc. 02–1109 Filed 1–15–02; 8:45 am]

BILLING CODE 6560–50–P

ENVIRONMENTAL PROTECTION AGENCY

40 CFR Part 180

[OPP–301192; FRL–6810–3]

RIN 2070–AB78

Nicotine; Proposed Revocation of Tolerances

AGENCY: Environmental Protection Agency (EPA).

ACTION: Proposed rule.

SUMMARY: This document proposes to revoke specific tolerances forresidues of nicotine-containing compounds used as insecticides and for the insecticide nicotine because nicotine is no longer registered for those uses in the United States. The regulatory actions proposed in this document are part of the Agency's reregistration program under the Federal Insecticide, Fungicide, and Rodenticide Act (FIFRA), and the tolerance reassessment requirements of the Federal Food, Drug, and Cosmetic Act (FFDCA) section 408(q), as amended by the Food Quality Protection Act (FQPA) of 1996. By law, EPA is required by August 2002 to reassess 66% of the tolerances in existence on August 2, 1996, or about 6,400 tolerances. The regulatory actions in this document pertain to the proposed revocation of 66 nicotine tolerances which would be counted among tolerance/exemption reassessments made toward the August, 2002 review deadline.

DATES: Comments, identified by docket control numberOPP–301192, must be received on or before March 18, 2002.

ADDRESSES: Comments may be submitted by mail, electronically, or in person. Please follow the detailed instructions for each method as provided in Unit I. of the **SUPPLEMENTARY INFORMATION.** To ensure proper receipt by EPA, it is imperative that you identify docket control number OPP–301192 in the subject line on the first page of your response.

FOR FURTHER INFORMATION CONTACT: By mail: Joseph Nevola, Special Review and Reregistration Division (7508C), Office of Pesticide Programs, Environmental Protection Agency, 1200 Pennsylvania Ave, NW., Washington, DC 20460; telephone number: (703) 308–8037; e-mail address: nevola.joseph@epa.gov.

SUPPLEMENTARY INFORMATION:

I. General Information

A. Does this Action Apply to Me?

You may be affected by this action if you are an agricultural producer, food manufacturer, or pesticide manufacturer. Potentially affected categories and entities may include, but are not limited to:

Categories	NAICS	Examples of Potentially Affected Entities
Industry	111 112 311 32532	Crop production Animal production Food manufacturing Pesticide manufacturing

This listing is not intended to be exhaustive, but rather provides a guide for readers regarding entities likely to be affected by this action. Other types of entities not listed in the table could also be affected. The North American Industrial Classification System (NAICS) codes have been provided to assist you and others in determining whether or not this action might apply to certain entities. If you have questions regarding the applicability of this action to a particular entity, consult the person listed under **FOR FURTHER INFORMATION CONTACT**.

B. How Can I Get Additional Information, Including Copies of this Document and Other Related Documents?

1. *Electronically.*You may obtain electronic copies of this document, and certain other related documents that might be available electronically, from the EPA Internet Home Page at http://www.epa.gov/. To access this document, on the Home Page select ''Laws and Regulations,'' ''Regulations and Proposed Rules,'' and then look up the entry for this document under the ''**Federal Register**—Environmental Documents.'' You can also go directly to the **Federal Register** listings at http://www.epa.gov/fedrgstr/. A frequently updated electronic version of 40 CFR part 180 is available at http://www.access.gpo.gov/nara/cfr/cfrhtml_180/Title_40/40cfr180_00.html, a beta site currently under development.

2. *In person.* The Agency has established an official record for this action under docket control number OPP–301192. The official record consists of the documents specifically referenced in this action, and other information related to this action, including any information claimed as Confidential Business Information (CBI). This official record includes the documents that are physically located in the docket, as well as the documents that are referenced in those documents. The public version of the official record does not include any information claimed as CBI. The public version of the official record, which includes printed, paper versions of any electronic comments submitted during an applicable comment period is available for inspection in the Public Information and Records Integrity Branch (PIRIB), Rm. 119, Crystal Mall# 2, 1921 Jefferson Davis Hwy., Arlington, VA, from 8:30 a.m. to 4 p.m., Monday through Friday, excluding legal holidays. The PIRIB telephone number is (703) 305–5805.

C. How and to Whom Do I Submit Comments?

You may submit comments through the mail, in person, or electronically. To ensure proper receipt by EPA, it is imperative that you identify docket control number OPP–301192 in the subject line on the first page of your response.

1. *By mail.* Submit your comments to: Public Information and Records Integrity Branch (PIRIB), Information Resources and Services Division (7502C), Office of Pesticide Programs (OPP), Environmental Protection Agency, 1200 Pennsylvania Ave., NW., Washington, DC 20460.

2. *In person or by courier.* Deliver your comments to: Public Information and Records Integrity Branch (PIRIB), Information Resources and Services Division (7502C), Office of Pesticide Programs (OPP), Environmental Protection Agency, Rm. 119, Crystal Mall #2, 1921 Jefferson Davis Hwy., Arlington, VA. The PIRIB is open from 8:30 a.m. to 4 p.m., Monday through Friday, excluding legal holidays. The PIRIB telephone number is (703) 305–5805.

3. *Electronically.* You may submit your comments electronically by e-mail to: opp-docket@epa.gov, or you can submit a computer disk as described in this unit. Do not submit any information electronically that you consider to be CBI. Electronic comments must be submitted as an ASCII file avoiding use of special characters and any form of encryption. Comments and data will also be accepted on standard disks in WordPerfect 6.1/8.0 or ASCII file format. All comments in electronic form must be identified by docket control number OPP–301192. Electronic comments may also be filed online at many Federal Depository Libraries.

D. How Should I Handle CBI that I Want to Submit to the Agency?

Do not submit any information electronically that you consider to be CBI. You may claim information that you submit to EPA in response to this document as CBI by marking any part or all of that information as CBI. Information so marked will not be disclosed except in accordance with procedures set forth in 40 CFR part 2. In addition to one complete version of the comment that includes any information claimed as CBI, a copy of the comment that does not contain the information claimed as CBI must be submitted for inclusion in the public version of the official record. Information not marked confidential will be included in the public version of the official record without prior notice. If you have any questions about CBI or the procedures for claiming CBI, please consult the person listed under **FOR FURTHER INFORMATION CONTACT**.

E. What Should I Consider as I Prepare My Comments for EPA?

You may find the following suggestions helpful for preparing your comments:

1. Explain your views as clearly as possible.

2. Describe any assumptions that you used.

3. Provide copies of any technical information and/or data you used that support your views.

4. If you estimate potential burden or costs, explain how you arrived at the estimate that you provide.

5. Provide specific examples to illustrate your concerns.

6. Offer alternative ways to improve the proposed rule or collection activity.

7. Make sure to submit your comments by the deadline in this document.

8. To ensure proper receipt by EPA, be sure to identify the docket control number assigned to this action in the subject line on the first page of your response. You may also provide the name, date, and **Federal Register** citation.

F. What Can I do if I Wish the Agency to Maintain a Tolerance that the Agency Proposes to Revoke?

This proposed rule provides a comment period of 60 days for any person to state an interest in retaining a tolerance proposed for revocation. If EPA receives a comment within the 60-day period to that effect, EPA will not proceed to revoke the tolerance immediately. However, EPA will take steps to ensure the submission of any needed supporting data and will issue an order in the **Federal Register** under FFDCA section 408(f) if needed. The order would specify data needed and the time frames for its submission, and would require that within 90 days some person or persons notify EPA that they will submit the data. If the data are not submitted as required in the order, EPA will take appropriate action under FFDCA.

EPA issues a final rule after considering comments that are submitted in response to this proposed rule. In addition to submitting comments in response to this proposal, you may also submit an objection at the time of the final rule. If you fail to file an objection to the final rule within the time period specified, you will have waived the right to raise any issues resolved in the final rule. After the specified time, issues resolved in the final rule cannot be raised again in any subsequent proceedings.

II. Background

A. What Action is the Agency Taking?

EPA is proposing to revoke specific tolerances for residues of nicotine-containing compounds used as insecticides and for the insecticide nicotine in or on commodities listed in the regulatory text because nicotine is no longer registered under FIFRA for

use on those commodities. It is EPA's general practice to propose revocation of those tolerances for residues of pesticide active ingredients on crop uses for which there are no active registrations under FIFRA, unless any person in comments on the proposal indicates a need for the tolerance to cover residues in or on imported commodities or domestic commodities legally treated.

Many food uses were removed from nicotine labels in 1992 and in 1994. On April 29, 1992 a FIFRA 6(f)(1) notice of receipt of a request to voluntarily cancel certain nicotine registrations was published in the **Federal Register** (57 FR 18146) (FRL–4056–6), with a use deletion date of July 28, 1992. On October 20, 1993 another 6(f)(1) notice of a receipt of request to voluntarily cancel certain nicotine registrations was published in the **Federal Register** (58 FR 54148) (FRL–4647–1), with a cancellation date of January 28, 1994. No residue data exist to support the tolerances being proposed for revocation. With the exception of cucumber, lettuce, and tomato, there are no other active food use registrations existing for nicotine-containing compounds or nicotine. Therefore, EPA is proposing to revoke a total of 66 tolerances, of which 62 tolerances are found in 40 CFR 180.167 and 4 tolerances are found in § 180.167a.

Specifically, in 40 CFR 180.167 EPA is proposing to revoke tolerances for the following: Apples; apricots; artichokes; asparagus; avocados; beans; beets (with or without tops) or beet greens alone; blackberries; boysenberries; broccoli; Brussels sprouts; cabbage; cauliflower; celery; cherries; citrus fruits; collards; corn; cranberries; currants; dewberries; eggplants; gooseberries; grapes; kale; kohlrabi; loganberries; melons; mushrooms; mustard greens; nectarines; okra; onions; parsley; parsnips (with or without tops) or parsnip greens alone; peaches; pears; peas; peppers; plums (fresh prunes); pumpkins; quinces; radishes (with or without tops) or radish tops; raspberries; rutabagas (with or without tops) or rutabaga tops; spinach; squash; strawberries; summer squash; Swiss chard; turnips (with or without tops) or turnip greens; and youngberries. In 40 CFR 180.167a EPA is proposing to revoke tolerances for eggs; poultry, fat; poultry, meat; and poultry, meat byproducts by removing § 180.167a in its entirety. For counting purposes, the tolerances depicted above as with or without tops are each counted as two tolerances.

In order to conform to current Agency practice, EPA is also proposing to revise the remaining tolerance commodity names in 40 CFR 180.167 for cucumbers to cucumber and tomatoes to tomato.

B. What is the Agency's Authority for Taking this Action?

A tolerance represents the maximum level for residues of pesticide chemicals legally allowed in or on raw agricultural commodities and processed foods. Section 408 of FFDCA, 21 U.S.C. 301 *et seq.*, as amended by the FQPA of 1996, Public Law 104–170, authorizes the establishment of tolerances, exemptions from tolerance requirements, modifications in tolerances, and revocation of tolerances for residues of pesticide chemicals in or on raw agricultural commodities and processed foods (21 U.S.C. 346(a)). Without a tolerance or exemption, food containing pesticide residues is considered to be unsafe and therefore adulterated under section 402(a) of the FFDCA. If food containing pesticide residues is considered to be adulterated, you may not distribute the product in interstate commerce (21 U.S.C. 331(a) and 342(a)). For a fooduse pesticide to be sold and distributed, the pesticide must not only have appropriate tolerances under the FFDCA, but also must be registered under FIFRA (7 U.S.C. *et seq.*). Fooduse pesticides not registered in the United States have tolerances for residues of pesticides in or on commodities imported into the United States.

It is EPA's general practice to propose revocation of tolerances for residues of pesticide active ingredients on crops for which FIFRA registrations no longer exist and on which the pesticide may therefore no longer be used in the United States. EPA has historically been concerned that retention of tolerances that are not necessary to cover residues in or on legally treated foods may encourage misuse of pesticides within the United States. Nonetheless, EPA will establish and maintain tolerances even when corresponding domestic uses are canceled if the tolerances, which EPA refers to as import tolerances, are necessary to allow importation into the United States of food containing such pesticide residues. However, where there are no imported commodities that require these import tolerances, the Agency believes it is appropriate to revoke tolerances for unregistered pesticides in order to prevent potential misuse.

Furthermore, as a general matter, the Agency believes that retention of import tolerances not needed to cover any imported food may result in unnecessary restriction on trade of pesticides and foods. Under section 408 of the FFDCA, a tolerance may only be established or maintained if EPA determines that the tolerance is safe based on a number of factors, including an assessment of the aggregate exposure to the pesticide and of the cumulative effects of such pesticide and other substances that have a common mechanism of toxicity. In doing so, EPA must consider potential contributions to such exposure from all tolerances. If the cumulative risk is such that the tolerances in aggregate are not safe, then every one of these tolerances is potentially vulnerable to revocation. Furthermore, if unneeded tolerances are included in the aggregate and cumulative risk assessments, the estimated exposure to the pesticide would be inflated. Consequently, it may be more difficult for others to obtain needed tolerances or to register needed new uses. To avoid potential trade restrictions, the Agency is proposing to revoke tolerances for residues on crops uses for which FIFRA registrations no longer exist, unless someone expresses a need for such tolerances and commits to the data needed to support them. Through this proposed rule, the Agency is inviting individuals who need these import tolerances to identify themselves and the tolerances that are needed to cover imported commodities.

Parties interested in retention of the tolerances should be aware that additional data may be needed to support retention. These parties should be aware that, under FFDCA section 408(f), if the Agency determines that additional information is reasonably required to support the continuation of a tolerance, EPA may require that parties interested in maintaining the tolerances provide the necessary information. If the requisite information is not submitted, EPA may issue an order revoking the tolerance at issue.

C. When do These Actions Become Effective?

For this rule, the proposed actions will affect uses which have been canceled for many years. EPA is proposing that these actions become effective 90 days following publication of a final rule in the **Federal Register**. EPA is proposing to delay the effectiveness of these revocations for 90 days following publication of a final rule to ensure that all affected parties receive notice of EPA's actions. EPA believes that existing stocks of pesticide products labeled for the uses associated with the tolerances proposed for revocation have been exhausted. However, if EPA is presented with information that existing stocks would still be available and that information is verified, EPA will consider extending the expiration date of the tolerance. If

you have comments regarding existing stocks and whether the effective date accounts for these stocks, please submit comments as described under **SUPPLEMENTARY INFORMATION.**

Any commodities listed in this proposal treated with the pesticides subject to this proposal, and in the channels of trade following the tolerance revocations, shall be subject to FFDCA section 408(1)(5), as established by FQPA. Under this section, any residues of these pesticides in or on such food shall not render the food adulterated so long as it is shown to the satisfaction of FDA that, (1) the residue is present as the result of an application or use of the pesticide at a time and in a manner that was lawful under FIFRA, and (2) the residue does not exceed the level that was authorized at the time of the application or use to be present on the food under a tolerance or exemption from tolerance. Evidence to show that food was lawfully treated may include records that verify the dates that the pesticide was applied to such food.

D. What Is the Contribution to Tolerance Reassessment?

By law, EPA is required by August 2002 to reassess 66% or about 6,400 of the tolerances in existence on August 2, 1996. EPA is also required to assess the remaining tolerances by August, 2006. As of January 3, 2002, EPA has reassessed over 3,830 tolerances. This document proposes to revoke a total of 66 tolerances of which 62 are in 40 CFR 180.167 and 4 are in 40 CFR 180.167a. Therefore, 66 tolerance reassessments would be counted when the final rule is published toward the August, 2002 review deadline of FFDCA section 408(q), as amended by FQPA in 1996.

III. Are the Proposed Actions Consistent with International Obligations?

The tolerance revocations in this proposal are not discriminatory and are designed to ensure that both domesticallyproduced and imported foods meet the food safety standards established by the FFDCA. The same food safety standards apply to domestically produced and imported foods.

EPA is working to ensure that the U.S. tolerance reassessment program under FQPA does not disrupt international trade. EPA considers Codex Maximum Residue Limits (MRLs) in setting U.S. tolerances and in reassessing them. MRLs are established by the Codex Committee on Pesticide Residues, a committee within the Codex Alimentarius Commission, an international organization formed to promote the coordination of international food standards. It is EPA's policy to harmonize U.S. tolerances with Codex MRLs to the extent possible, provided that the MRLs achieve the level of protection required under FFDCA. EPA's effort to harmonize with Codex MRLs is summarized in the tolerance reassessment section of individual Reregistration Eligibility Decision documents. EPA has developed guidance concerning submissions for import tolerance support (65 FR 35069, June 1, 2000) (FRL–6559–3). This guidance will be made available to interested persons. Electronic copies are available on the internet at http://www.epa.gov/. On the Home Page select ''Laws and Regulations,'' then select ''Regulations and Proposed Rules'' and then look up the entry for this document under **Federal Register** Environmental Documents. You can also go directly to the **Federal Register** listings at http://www.epa.gov/fedrgstr/.

IV. Regulatory Assessment Requirements

In this proposed rule, EPA is proposing to revoke specific tolerances established under FFDCA section 408. The Office of Management and Budget (OMB) has exempted this type of action (i.e., a tolerance revocation for which extraordinary circumstances do not exist) from review under Executive Order 12866, entitled *Regulatory Planning and Review* (58 FR 51735, October 4, 1993). Because this proposed rule has been exempted from review under Executive Order 12866 due to its lack of significance, this proposed rule is not subject to Executive Order 13211, *Actions Concerning Regulations That Significantly Affect Energy Supply, Distribution, or Use* (66 FR 28355, May 22, 2001). This proposed rule does not contain any information collections subject to OMB approval under the Paperwork Reduction Act (PRA), 44 U.S.C. 3501 *et seq.*, or impose any enforceable duty or contain any unfunded mandate as described under Title II of the Unfunded Mandates Reform Act of 1995 (UMRA) (Public Law 104–4). Nor does it require any *special considerations as required by Executive Order 12898, entitled Federal Actions to Address Environmental Justice in Minority Populations and Low-Income Populations* (59 FR 7629, February 16, 1994); or OMB review or any other Agency action under Executive Order 13045, entitled *Protection of Children from Environmental Health Risks and Safety Risks* (62 FR 19885, April 23, 1997). This action does not involve any technical standards that would require Agency consideration of voluntary consensus standards pursuant to section 12(d) of the National Technology Transfer and Advancement Act of 1995 (NTTAA), Public Law 104–113, section 12(d) (15 U.S.C. 272 note). Pursuant to the Regulatory Flexibility Act (RFA) (5 U.S.C. 601 *et seq.*), the Agency previously assessed whether revocations of tolerances might significantly impact a substantial number of small entities and concluded that, as a general matter, these actions do not impose a significant economic impact on a substantial number of small entities. This analysis was published on December 17, 1997 (62 FR 66020), and was provided to the Chief Counsel for Advocacy of the Small Business Administration. Taking into account this analysis, and available information concerning the pesticides listed in this rule, I certify that this action will not have a significant economic impact on a substantial number of small entities. Specifically, as per the 1997 notice, EPA has reviewed its available data on imports and foreign pesticide usage and concludes that there is a reasonable international supply of food not treated with canceled pesticides. Furthermore, for the pesticides named in this proposed rule, the Agency knows of no extraordinary circumstances that exist as to the present proposed revocations that would change EPA's previous analysis. Any comments about the Agency's determination should be submitted to EPA along with comments on the proposal, and will be addressed prior to issuing a final rule.

In addition, the Agency has determined that this action will not have a substantial direct effect on States, on the relationship between the national government and the States, or on the distribution of power and responsibilities among the various levels of government, as specified in Executive Order 13132, entitled *Federalism* (64 FR 43255, August 10, 1999). Executive Order 13132 requires EPA to develop an accountable process to ensure ''meaningful and timely input by State and local officials in the development of regulatory policies that have federalism implications.'' ''Policies that have federalism implications'' is defined in the Executive Order to include regulations that have ''substantial direct effects on the States, on the relationship between the national government and the States, or on the distribution of power and responsibilities among the various levels of government.'' This proposed rule directly regulates growers, food

processors, food handlers and food retailers, not States. This action does not alter the relationships or distribution of power and responsibilities established by Congress in the preemption provisions of FFDCA section 408(n)(4). For these same reasons, the Agency has determined that this rule does not have any tribal implications as described in Executive Order 13175, entitled Consultation and Coordination with Indian Tribal Governments (65 FR 67249, November 6, 2000). Executive Order 13175 requires EPA to develop an accountable process to ensure meaningful and timely input by tribal officials in the development of regulatory policies that have tribal implications. Policies that have tribal implications is defined in the Executive Order to include regulations that have substantial direct effects on one or more Indian tribes, on the relationship between the Federal government and the Indian tribes, or on the distribution of power and responsibilities between the Federal government and Indian tribes. This rule will not have substantial direct effects on tribal governments, on the relationship between the Federal government and Indian tribes, or on the distribution of power and responsibilities between the Federal government and Indian tribes, as specified in Executive Order 13175. Thus, Executive Order 13175 does not apply to this rule.

List of Subjects in 40 CFR Part 180

Environmental protection, Administrative practice and procedure, Agricultural commodities,Pesticides and pests, Reporting and recordkeeping requirements.

Dated: December 20, 2001.

Marcia E. Mulkey,

Director, Office of Pesticide Programs.

Therefore, it is proposed that 40 CFR part 180 be amended as follows:

PART 180—[AMENDED]

1. The authority citation for part 180 continues to read as follows:

Authority: 21 U.S.C. 321(q), 346(a) and 371.

2. Section 180.167 is amended by removing entries from the existing paragraph and designating the existing paragraph as paragraph (a), and by adding and reserving paragraphs (b), (c), and (d), to read as follows:

§ 180.167 Nicotine-containing compounds; tolerances for residues.

(a) *General.* Tolerances are established for residues ofnicotine-containing compounds used as insecticides in or on the following raw agricultural commodities:

Commodity	Parts per million
Cucumber	2.0
Lettuce	2.0
Tomato	2.0

(b) *Section 18 emergency exemptions.* [Reserved]

(c) *Tolerances with regional registrations.* [Reserved]

(d) *Indirect or inadvertent residues.* [Reserved]

§ 180.167a [Removed]

3. Section 180.167a is removed.

[FR Doc. 02–628 Filed 1–15–02; 8:45 am]

BILLING CODE 6560–50–S

DEPARTMENT OF TRANSPORTATION

Federal Railroad Administration

49 CFR Part 241

[FRA Docket No. FRA–2001–8728, Notice No. 2]

RIN 2130–AB38

U.S. Locational Requirement for Dispatching of U.S. Rail Operations

AGENCY: Federal Railroad Administration (FRA), Department of Transportation (DOT).

ACTION: Notice of public hearing.

SUMMARY: On December 11, 2001 (66 FR 63942), FRA published an Interim Final Rule (IFR) requiring all dispatching of railroad operations that occur in the United States to be performed in the United States with three minor exceptions. FRA is interested in receiving public comments on possible benefits and costs of this IFR and comments on whether FRA should adopt an alternative regulatory scheme under which extraterritorial dispatching of United States railroad operations would be permitted and, if so, under what conditions. In the IFR, FRA announced that it would schedule a public hearing to allow interested parties the opportunity to comment on these issues. This notice announces the scheduling of the public hearing.

DATES: *Public Hearing:* The date of the public hearing is Tuesday, February 12, 2002, at 10 a.m. in Washington, DC. Any person wishing to participate in the public hearing should notify the Docket Clerk by telephone (202–493–6030) or by mail at the address provided below at least five working days prior to the date of the hearing and submit to the Docket Clerk three copies of the oral statement that he or she intends to make at the hearing. The notification should identify the party the person represents, and the particular subject(s) the person plans to address. The notification should also provide the Docket Clerk with the participant's mailing address.

ADDRESSES: (1) *Docket Clerk:* Written notification should identify the docket number and must be submitted in triplicate to Ms. Ivornette Lynch, Docket Clerk, Office of Chief Counsel, Federal Railroad Administration, RCC–10, 1120 Vermont Ave., NW., Stop 10, Washington, DC 20590.

(2) *Public Hearing:* The public hearing will be held in the Department of Transportation Headquarters Building, 400 7th Street, SW., Rooms 3200–3204, Washington, DC 20590. Attendees should bring an identification card with photograph (such as a current driver's license), report to the security counter in the southwest quadrant of the DOT building for admission, and follow security procedures as provided at that location.

FOR FURTHER INFORMATION CONTACT: Douglas Taylor, Staff Director for Operating Practices, FRA Office of Safety, RRS–11, 1120 Vermont Avenue, NW., Stop 25, Washington, DC 20590 (telephone 202–493–6255); John Winkle, Trial Attorney, FRA Office of the Chief Counsel, RCC–12, 1120 Vermont Avenue, NW., Stop 10, Washington, DC 20590 (telephone 202–493–6067); or Billie Stultz, Deputy Assistant Chief Counsel, FRA Office of Chief Counsel, RCC–12, 1120 Vermont Avenue, NW., Stop 10, Washington, DC 20590 (telephone 202–493–6053 or 202–493–6029).

Issued in Washington, DC, on January 9, 2002.

Allan Rutter,

Federal Railroad Administrator.

[FR Doc. 02–1027 Filed 1–15–02; 8:45 am]

BILLING CODE 4910–06–P

Notices

Federal Register
Vol. 67, No. 11
Wednesday, January 16, 2002

This section of the FEDERAL REGISTER contains documents other than rules or proposed rules that are applicable to the public. Notices of hearings and investigations, committee meetings, agency decisions and rulings, delegations of authority, filing of petitions and applications and agency statements of organization and functions are examples of documents appearing in this section.

AFRICAN DEVELOPMENT FOUNDATION

Sunshine Act Meeting; Board of Directors

TIME: 11:00 am–2:30 pm.

PLACE: ADF Headquarters.

DATE: Tuesday, January 29, 2002.

STATUS: Open.

Agenda

11:00 am–11:30 am—Chairman's Report
11:30 am–12:30 pm—President's Report
12:30 pm–1:00 pm—Lunch
1:00 pm–2:30 pm—Executive Session (Closed)
2:30 pm—Adjournment

If you have any questions or comments, please direct them to Doris Martin, General Counsel, who can be reached at (202) 673–3916.

Nathaniel Fields,
President.

[FR Doc. 02–1281 Filed 1–14–02; 3:50 pm]

BILLING CODE 6117–01–P

DEPARTMENT OF COMMERCE

Submission for OMB Review; Comment Request

The Department of Commerce has submitted to the Office of Management and Budget (OMB) for clearance the following proposal for collection of information under the provisions of the Paperwork Reduction Act (44 U.S.C. chapter 35).

Agency: National Telecommunications and Information Administration (NTIA).

Title: Performance Reporting System (PRS) for the Technology Opportunities Program (TOP).

Form Number(s): None.

OMB Approval Number: 0660–0015.

Type of Request: Regular Submission.

Burden Hours: 1492.

Number of Respondents: 50.

Average Hours Per Response: Start-Up Documentation—20 hours; Progress Reports—16 hours; Annual Report—0.5 hours; Final Closeout Report—20 hours.

Needs and Uses: The purpose of the Technology Opportunities Program (TOP), formerly the Telecommunications and Information Infrastructure Assistance Program (TIIAP), is to promote the widespread and efficient use of advanced telecommunications services in the public and non-profit sectors to serve America's communities through the award of matching grants.

Affected Public: State, local, or tribal government, and not-for-profit institutions.

Frequency: Quarterly, annually, and final report.

Respondent's Obligation: Required to obtain or retain benefits.

OMB Desk Officer: David Rostker, (202) 395–3897.

Copies of the above information collection proposal can be obtained by calling or writing Madeleine Clayton, Departmental Paperwork Clearance Officer, (202) 482–3129, Department of Commerce, Room 6086, 14th and Constitution Avenue, NW, Washington, DC 20230 (or via the Internet at MClayton@doc.gov.

Written comments and recommendations for the proposed information collection should be sent within 30 days of publication of this notice to David Rostker, OMB Desk Officer, Room 10202, New Executive Office Building, Washington, DC 20503.

Dated: January 10, 2002.

Madeleine Clayton,
Departmental Paperwork Clearance Officer, Office of the Chief Information Officer.

[FR Doc. 02–1032 Filed 1–15–02; 8:45 am]

BILLING CODE 3510–60–P

DEPARTMENT OF COMMERCE

Submission for OMB Review; Comment Request

DOC has submitted to the Office of Management and Budget (OMB) for clearance the following proposal for collection of information under the provisions of the Paperwork Reduction Act (44 U.S.C. chapter 35).

Agency: U.S. Census Bureau.

Title: 2002 Vehicle Inventory and Use Survey (VIUS).

Form Number(s): TC–9501, TC–9502.

Agency Approval Number: None.

Type of Request: New collection.

Burden: 85,170.

Number of Respondents: 135,300.

Avg Hours Per Response: 38 minutes.

Needs and Uses: The Census Bureau requests clearance of the forms it will use to conduct the 2002 Vehicle Inventory and Use Survey (VIUS) as part of the 2002 Economic Census. The 2002 VIUS will collect data to measure the physical and operational characteristics of trucks from a sample of approximately 135,300 trucks. These trucks are selected from more than 76 million private and commercial trucks registered on file with motor vehicle departments in the 50 states and the District of Columbia. The Census Bureau will collect the data for the sampled trucks from a questionnaire mailed to truck owners. We will publish physical and operational vehicular characteristics estimates for each state, the District of Columbia, and the United States.

The VIUS is the only comprehensive source of information on the physical and operational characteristics of the Nation's truck population. The need for truck industry data continues to be increasingly important with the passage of the Motor Carrier Act of 1980, the Clean Air Act amendments of 1990, and the Hours-of-Service Regulations proposal of 2000. The VIUS provides unique, essential information for government, business, and academia. The U.S. Department of Transportation, State Departments of Transportation, and transportation consultants compliment VIUS microdata as extremely useful and flexible to meet constantly changing requests that cannot be met with predetermined tabular publications. The microdata file enables them to cross-tabulate data to meet their needs. Federal, state, and local transportation agencies use information from the VIUS for the analysis of safety issues, proposed investments in new roads and technology, truck size and weight issues, user fees, cost allocation, energy and environmental constraints, hazardous materials transport, and other aspects of the Federal-aid highway program. The Federal government uses information from the VIUS as an important part of the framework for: (1) The national investment and personal consumption expenditures component

of the gross domestic product (GDP), (2) input-output tables, (3) economic development evaluation, (4) maintenance of vital statistics for prediction of future economic and transportation trends, (5) logistical requirements, (6) Metropolitan Planning Organization (MPO) transportation development requirements, and (7) regulatory impact analysis. Business and academia use information from the VIUS to assess intermodal use, conduct market studies and evaluate market strategies, assess the utility and cost of certain types of equipment, and calculate the longevity of products. VIUS information also is used to determine fuel demands and needs for fuel efficiency, to produce trade publication articles and special data arrays, and to assess the effects of deregulation on the restructuring of the transportation industries.

Affected Public: Individuals or households; Businesses or other for profit; Not-for-profit institutions; Farms.

Frequency: One time.

Respondent's Obligation: Mandatory.

Legal Authority: Title 13 U.S.C., section 131.

OMB Desk Officer: Susan Schechter, (202) 395–5103.

Copies of the above information collection proposal can be obtained by calling or writing Madeleine Clayton, Departmental Paperwork Clearance Officer, (202) 482–3129, Department of Commerce, room 6086, 14th and Constitution Avenue, NW., Washington, DC 20230 (or via the Internet at *mclayton@doc.gov*).

Written comments and recommendations for the proposed information collection should be sent within 30 days of publication of this notice to Susan Schechter, OMB Desk Officer, room 10201, New Executive Office Building, Washington, DC 20503.

Dated: January 10, 2002.

Madeleine Clayton,

Departmental Paperwork Clearance Officer, Office of the Chief Information Officer.

[FR Doc. 02–1035 Filed 1–15–02; 8:45 am]

BILLING CODE 3510–07–P

DEPARTMENT OF COMMERCE

Submission for OMB Review; Comment Request

DOC has submitted to the Office of Management and Budget (OMB) for clearance the following proposal for collection of information under the provisions of the Paperwork Reduction Act (44 U.S.C. chapter 35).

Agency: U.S. Census Bureau.

Title: 2002 Survey of Program Dynamics.

Form Number(s): SPD–22005, SPD–222105(L), SPD–22107(L), SPD–22103(L), SPD–22113(L).

Agency Approval Number: 0607–0838.

Type of Request: Revision of a currently approved collection.

Burden: 25,138 hours.

Number of Respondents: 41,990.

Avg Hours Per Response: 36 minutes.

Needs and Uses: The Census Bureau seeks OMB approval to conduct the 2002 Survey of Program Dynamics (SPD), the final data collection for this annual survey which began in 1997. The SPD provides the basis for an overall evaluation of how well welfare reforms are achieving the aims of the Administration and the Congress and meeting the needs of the American people. This survey simultaneously measures the important features of the full range of welfare programs, including programs that are being reformed and those that are unchanged, and the full range of other important social, economic, demographic, and family changes that will facilitate or limit the effectiveness of the reforms.

The SPD is a longitudinal study that follows a subset of the respondents from the 1992 and 1993 panels of the Survey of Income and Program Participation (SIPP). The SPD was first implemented in the spring of 1997 with a bridge survey that provided a link to baseline data for the period prior to the implementation of welfare reforms. The first full-scale SPD was conducted in 1998. The data gathered for the 10-year period (1992–2002) will aid in assessing short- to medium-term consequences of outcomes of the welfare legislation.

The 2002 SPD will exclude the self-administered questionnaire (SAQ) which we administered to 12- to 17-year-olds during the 2001 SPD, and will include questions on the extended measures of child well-being, last asked during the 1999 data collection. Due to cost constraints, the sample for the 2002 SPD will be reduced by approximately 30 percent to 20,000 households.

The 2002 SPD will be conducted by our interviewing staff using a computer-assisted interviewing instrument on laptops during personal and telephone interviews. As in previous years, we will offer monetary incentives to select groups of respondents in order to maintain and improve response rates.

Affected Public: Individuals or households.

Frequency: Annually.

Respondent's Obligation: Voluntary.

Legal Authority: Title 42 U.S.C., section 614.

OMB Desk Officer: Susan Schechter, (202) 395–5103.

Copies of the above information collection proposal can be obtained by calling or writing Madeleine Clayton, Departmental Paperwork Clearance Officer, (202) 482–3129, Department of Commerce, room 6086, 14th and Constitution Avenue, NW, Washington, DC 20230 (or via the Internet at *mclayton@doc.gov*).

Written comments and recommendations for the proposed information collection should be sent within 30 days of publication of this notice to Susan Schechter, OMB Desk Officer, room 10201, New Executive Office Building, Washington, DC 20503.

Dated: January 10, 2002.

Madeleine Clayton,

Departmental Paperwork Clearance Officer, Office of the Chief Information Officer.

[FR Doc. 02–1036 Filed 1–15–02; 8:45 am]

BILLING CODE 3510–07–P

DEPARTMENT OF COMMERCE

Submission for OMB Review; Comment Request

DOC has submitted to the Office of Management and Budget (OMB) for clearance the following proposal for collection of information under the provisions of the Paperwork Reduction Act (44 U.S.C. chapter 35).

Agency: U.S. Census Bureau.

Title: Survey of Building and Zoning Permit Systems.

Form Number(s): C–411.

Agency Approval Number: 0607–0350.

Type of Request: Reinstatement, with change, of an expired collection.

Burden: 500 hours.

Number of Respondents: 2,000.

Avg Hours Per Response: 15 minutes.

Needs and Uses: The Census Bureau produces statistics used to monitor activity in the large and dynamic construction industry. These statistics help state and local governments and the Federal Government, as well as private industry, to analyze this important sector of the economy. The accuracy of the Census Bureau statistics regarding the amount of construction authorized depends on data supplied by building and zoning officials throughout the country. The Census Bureau uses Form C–411, ''Survey of Building and Zoning Permits,'' to obtain information from state and local building permit officials needed for updating the universe of permit-issuing places from which samples for the Report of Privately-Owned Residential Building or Zoning Permits Issued (also known as

the Building Permits Survey (BPS)), and the Survey of Housing Starts, Sales, and Completions (also known as Survey of Construction (SOC)) are selected. The questions pertain to the legal requirements for issuing building or zoning permits in the local jurisdictions. Information is obtained on such items as geographic coverage and types of construction for which permits are issued. The form is sent to jurisdictions when the Census Bureau has reason to believe that a new permit system has been established or an existing one has changed.

We are requesting a reinstatement of the Form C–411 which has remained unused since its expiration earlier this year. We are requesting revisions to the form to streamline the collection and because of changing data needs.

Affected Public: State, local, or Tribal government.

Frequency: On occasion.

Respondent's Obligation: Voluntary.

Legal Authority: Title 13 U.S.C., sections 8(b), 9(b), 161, and 182; Title 15 U.S.C., section 1525.

OMB Desk Officer: Susan Schechter, (202) 395–5103.

Copies of the above information collection proposal can be obtained by calling or writing Madeleine Clayton, Departmental Paperwork Clearance Officer, (202) 482–3129, Department of Commerce, room 6086, 14th and Constitution Avenue, NW, Washington, DC 20230 (or via the Internet at *mclayton@doc.gov*).

Written comments and recommendations for the proposed information collection should be sent within 30 days of publication of this notice to Susan Schechter, OMB Desk Officer, room 10201, New Executive Office Building, Washington, DC 20503.

Dated: January 10, 2002.

Madeleine Clayton,

Departmental Paperwork Clearance Officer, Office of the Chief Information Officer.

[FR Doc. 02–1037 Filed 1–15–02; 8:45 am]

BILLING CODE 3510–07–P

DEPARTMENT OF COMMERCE

Submission for OMB Review; Comment Request

DOC has submitted to the Office of Management and Budget (OMB) for clearance the following proposal for collection of information under the provisions of the Paperwork Reduction Act of 1995, Public Law 104–13.

Bureau: International Trade Administration.

Title: Overseas Business Interest Questionnaire.

Agency Form Number: 471P.

OMB Number: 0625–0039.

Type of Request: Regular Submission.

Burden: 490 hours.

Number of Respondents: 1,000.

Avg. Hours Per Response: 30 minutes.

Needs and Uses: This collection allows U.S. firms participating in overseas trade events sponsored by the U.S. Department of Commerce's International Trade Administration (ITA) an opportunity to specifically identify their marketing objective for a specific event as well as current marketing activities and status in the specific foreign markets where the event will take place. The U.S. and Foreign Commercial Service/ITA overseas posts use the information to schedule business appointments during the trade event, arrange ''blue ribbon'' calls on key agents or distributors identified by participants prior to an event, and to issue specific show invitations appropriate prospective overseas business partners. It is critical to prearrange business appointments thus providing U.S. participants with a program of high caliber business appointments.

Affected Public: Businesses or other for-profits.

Frequency: Once.

Respondent's Obligation: Voluntary.

OMB Desk Officer: David Rostker, (202) 395–3897.

Copies of the above information collection proposal can be obtained by calling or writing Madeleine Clayton, Departmental Paperwork Clearance Officer, (202) 482–3129, Department of Commerce, Room 6086, 14th and Constitution, N.W., Washington, DC 20230 or via internet at *MClayton@doc.gov*.

Written comments and recommendations for the proposed information collection should be sent to David Rostker, OMB Desk Officer, Room 10202, New Executive Office Building, Washington, DC 20503 within 30 days of the publication of this notice in the **Federal Register**.

Dated: January 10, 2002.

Madeleine Clayton,

Departmental Paperwork Clearance Officer, Office of the Chief Information Officer.

[FR Doc. 02–1038 Filed 1–15–02; 8:45 am]

BILLING CODE 3510–DR–P

DEPARTMENT OF COMMERCE

Submission for OMB Review; Comment Request

DOC has submitted to the Office of Management and Budget (OMB) for clearance the following proposal for collection of information under the provisions of the Paperwork Reduction Act of 1995, Public Law 104–13.

Bureau: International Trade Administration.

Title: Advocacy Questionnaire.

Agency Form Number: ITA–4133P.

OMB Number: 0625–0220.

Type of Request: Regular Submission.

Burden: 205.

Number of Respondents: 200.

Avg. Hours Per Response: 30 minutes.

Needs and Uses: The U.S. Department of Commerce invites the general public and other Federal agencies to comment on the proposed extension of the use of the advocacy questionnaire by the Trade Promotion Coordination Committee's (TPCC) Advocacy Network. The questionnaire is used to evaluate requests for United States' Government (USG) commercial advocacy in connection with overseas bids and proposals. The International Trade Administration's Advocacy Center marshals federal resources to assist U.S. business interests competing for foreign government procurements worldwide. The mission of the Advocacy Center is to coordinate USG commercial advocacy in order to promote U.S. exports and create U.S. jobs. The Advocacy Center is under the umbrella of the TPCC, which is chaired by the Secretary of Commerce and includes 19 federal agencies involved in export promotion. The purpose of the advocacy questionnaire is to collect the information necessary to make an evaluation about a company's eligibility for USG advocacy assistance. There are clear, well established USG advocacy guidelines that describe the various situations in which the USG can provide advocacy support for a firm. The questionnaire was developed to collect only the information necessary to determine if the firm meets the eligibility requirements set forth in these guidelines. The Advocacy Center, appropriate ITA officials, our U.S. Embassies worldwide, and other federal government agencies (the Advocacy Network) that provide advocacy support, will require firms seeking USG advocacy support to complete the questionnaire. Without this information, the USG would be unable to make eligibility determinations.

Affected Public: Businesses or other for-profits.

Frequency: Occasionally.

Respondent's Obligation: Voluntary.

OMB Desk Officer: David Rostker, (202) 395–3897.

Copies of the above information collection proposal can be obtained by calling or writing Madeleine Clayton, Departmental Paperwork Clearance Officer, (202) 482–3129, Department of

Commerce, Room 6086, 14th and Constitution, NW, Washington, DC 20230 or via internet at *MClayton@doc.gov*.

Written comments and recommendations for the proposed information collection should be sent to David Rostker, OMB Desk Officer, Room 10202, New Executive Office Building, Washington, DC 20503 within 30 days of the publication of this notice in the **Federal Register**.

Dated: January 10, 2002.

Madeleine Clayton,

Departmental Paperwork Clearance Officer, Office of the Chief Information Officer.

[FR Doc. 02–1039 Filed 1–15–02; 8:45 am]

BILLING CODE 3510–DR–P

DEPARTMENT OF COMMERCE

Submission for OMB Review; Comment Request

The Department of Commerce (DOC) has submitted to the Office of Management and Budget (OMB) for clearance the following proposal for collection of information under provisions of the Paperwork Reduction Act (44 U.S.C. Chapter 35).

Agency: Bureau of Export Administration (BXA).

Title: National Defense Authorization Act (NDAA).

Agency Form Number: BXA–742R, BXA–742S.

OMB Approval Number: 0694–0107.

Type of Request: Extension of a currently approved collection of information.

Burden: 35 hours.

Average Time Per Response: 15 minutes per response.

Number of Respondents: 140 respondents.

Needs and Uses: This collection of information is required as the result of the amending of the Export Administration Regulations (15 CFR parts 730–799) (EAR) by revising the (EAR) requirements for exports and reexports contained in sections 1211–1215 of the National Defense Authorization Act (NDAA) for fiscal year 1998 (Pub. L. 105–85, 111 Stat. 1629), signed by the President on November 18, 1997. The Bureau of Export Administration (BXA) needs the information in this collection to fulfill two requirements of the National Defense Authorization Act for Fiscal Year 1998 (NDAA). Those requirements are: (1) Proposed exports and reexports of high performance computers to specific countries must be reviewed by enumerated government agencies prior to the export and (2) that the government conduct a ''post shipment verification'' of each high performance computer exported to those countries after November 17, 1997. Both of these requirements are new and were imposed by the Congress with the passage of the NDAA. To simplify the latter, BXA has developed a new form that will incorporate the relevant data elements and replace the written report, thereby standardizing the data format for the applicant, and enabling the use of information technology in the processing of the data.

Affected Public: Individuals, businesses or other for-profit institutions.

Respondent's Obligation: Mandatory.

OMB Desk Officer: David Rostker.

Copies of the above information collection proposal can be obtained by calling or writing Madeleine Clayton, DOC Paperwork Clearance Officer, (202) 482–3129, Department of Commerce, Room 6086, 14th and Constitution Avenue, NW., Washington, DC 20230.

Written comments and recommendations for the proposed information collection should be sent within 30 days of publication of this notice to David Rostker, OMB Desk Officer, Room 10202, New Executive Office Building, Washington, DC 20230.

Dated: January 10, 2002.

Madeleine Clayton,

Departmental Paperwork Clearance Officer, Office of the Chief Information Officer.

[FR Doc. 02–1040 Filed 1–15–02; 8:45 am]

BILLING CODE 3510–DT–P

DEPARTMENT OF COMMERCE

Submission for OMB Review; Comment Request

The Department of Commerce (DOC) has submitted to the Office of Management and Budget (OMB) for clearance the following proposal for collection of information under provisions of the Paperwork Reduction Act (44 U.S.C. Chapter 35).

Agency: Bureau of Export Administration (BXA).

Title: Prior Notification of Exports Under License Exception AGR.

Agency Form Number: BXA–748P.

OMB Approval Number: 0694–0123.

Type of Request: Emergency approval requested.

Burden: 93 hours.

Average Time Per Response: 52–57 minutes per response.

Number of Respondents: 25 respondents.

Needs and Uses: Section 906 of the TSRA requires that exports of agricultural commodities, medicine or medical devices to Cuba or to the government of a country that has been determined by the Secretary of State to have repeatedly provide support for acts of international terrorism, or to any other entity in such a country, are made pursuant to one-year licenses issued by the U.S. Government, while further providing that the requirements of one-year licenses shall be no more restrictive than license exceptions administered by the Department of Commerce, except that procedures shall be in place to deny licenses for exports to any entity within such country promoting international terrorism.

Affected Public: Individuals, businesses or other for-profit institutions.

Respondent's Obligation: Required to obtain or retain a benefit.

OMB Desk Officer: David Rostker.

Copies of the above information collection proposal can be obtained by calling or writing Madeleine Clayton, DOC Paperwork Clearance Officer, (202) 482–3129, Department of Commerce, Room 6086, 14th and Constitution Avenue, NW, Washington, DC 20230.

Written comments and recommendations for the proposed information collection should be sent within 30 days of publication of this notice to David Rostker, OMB Desk Officer, Room 10202, New Executive Office Building, Washington, DC 20230.

Dated: January 10, 2002.

Madeleine Clayton,

Departmental Paperwork Clearance Officer, Office of the Chief Information Officer.

[FR Doc. 02–1042 Filed 1–15–02; 8:45 am]

BILLING CODE 3510–33–P

DEPARTMENT OF COMMERCE

Submission for OMB Review; Comment Request

The Department of Commerce (DOC) has submitted to the Office of Management and Budget (OMB) for clearance the following proposal for collection of information under provisions of the Paperwork Reduction Act (44 U.S.C. chapter 35).

Agency: Bureau of Export Administration (BXA).

Title: Technology Letter of Explanation.

Agency Form Number: N/A.

OMB Approval Number: 0694–0047.

Type of Request: Extension of a currently approved collection of information.

Burden: 3,602 hours.

Average Time Per Response: ½ to 2 hours.

Number of Respondents: 2,896 respondents.

Needs and Uses: The information contained in these letters will assure BXA that no unauthorized technical data will be exported for unauthorized end-uses or to unauthorized destinations and thus provide assurance that U.S. national security and foreign policy programs are followed.

Affected Public: Individuals, businesses or other for-profit institutions.

Respondent's Obligation: Required to obtain or retain benefits.

OMB Desk Officer: David Rostker.

Copies of the above information collection proposal can be obtained by calling or writing Madeleine Clayton, DOC Paperwork Clearance Officer, (202) 482–3129, Department of Commerce, Room 6066, 14th and Constitution Avenue, NW, Washington, DC 20230.

Written comments and recommendations for the proposed information collection should be sent within 30 days of publication of this notice to Dave Rostker, OMB Desk Officer, Room 10202, New Executive Office Building, Washington, DC 20230.

Dated: January 10, 2002.

Madeleine Clayton,

Departmental Paperwork Clearance Officer, Office of the Chief Information Officer.

[FR Doc. 02–1043 Filed 1–15–02; 8:45 am]

BILLING CODE 3510–33–P

DEPARTMENT OF COMMERCE

Submission for OMB Review; Comment Request

The Department of Commerce (DOC) has submitted to the Office of Management and Budget (OMB) for clearance the following proposal for collection of information under provisions of the Paperwork Reduction Act (44 U.S.C. chapter 35).

Agency: Bureau of Export Administration (BXA).

Title: Computers and Related Equipment.

Agency Form Number: N/A.

OMB Approval Number: 0694–0013.

Type of Request: Extension of a currently approved collection of information.

Burden: 43.

Average Hours Per Response: 32 minutes.

Number of Respondents: 80.

Needs and Uses: The advances in U.S. computer technology have created products that have a broad range of end-uses that include military applications and other uses that may be contrary to our national security, foreign policy, and proliferation concerns. In order to continue our profitable international trade position and at the same time protect our national security, it has become necessary to establish a system for precise and detailed evaluations of computer systems.

Affected Public: Businesses or other for-profit institutions.

Respondent's Obligation: Required to obtain or retain benefits.

OMB Desk Officer: David Rostker.

Copies of the above information collection proposal can be obtained by calling or writing Madeleine Clayton, DOC Paperwork Clearance Officer, (202) 482–3129, Department of Commerce, Room 6066, 14th and Constitution Avenue, NW, Washington, DC 20230.

Written comments and recommendations for the proposed information collection should be sent within 30 days of publication of this notice to David Rostker, OMB Desk Officer, Room 10202, New Executive Office Building, Washington, DC 20230.

Dated: January 10, 2001.

Madeleine Clayton,

Departmental Paperwork Clearance Officer, Office of the Chief Information Officer.

[FR Doc. 02–1044 Filed 1–15–02; 8:45 am]

BILLING CODE 3510–33–P

DEPARTMENT OF COMMERCE

[I.D. 011102A]

Submission for OMB Review; Comment Request

The Department of Commerce has submitted to the Office of Management and Budget (OMB) for clearance the following proposal for collection of information under the provisions of the Paperwork Reduction Act (44 U.S.C. Chapter 35).

Agency: National Oceanic and Atmospheric Administration (NOAA).

Title: Permits for Incidental Taking of Endangered or Threatened Species.

Form Number(s): None.

OMB Approval Number: 0648–0230.

Type of Request: Regular submission.

Burden Hours: 1,048.

Number of Respondents: 13.

Average Hours Per Response: 80 hours for a permit application; 30 minutes for an application for a Certificate of Inclusion; 8 hours for a permit report; 10 hours for a watershed plan; and 40 hours for a transfer of an Incidental Take permit.

Needs and Uses: The Endangered Species Act (ESA) prohibits the taking of endangered species. Section 10 of the ESA allows for certain exceptions to the prohibitions, such as a taking that would be incidental to an otherwise lawful activity. The corresponding regulations provide application and reporting requirements for such exceptions. The required information is used to evaluate the proposed activity (application) and ongoing activities (reports) and is necessary for National Marine Fisheries Service to ensure the conservation of the species under the ESA.

Affected Public: Individuals or households, business or other for-profit organizations, not-for-profit institutions, and state, local, or tribal government.

Frequency: On occasion; annually.

Respondent's Obligation: Required to obtain or retain a benefit.

OMB Desk Officer: David Rostker, (202) 395–3897.

Copies of the above information collection proposal can be obtained by calling or writing Madeleine Clayton, Departmental Paperwork Clearance Officer, (202) 482–3129, Department of Commerce, Room 6086, 14th and Constitution Avenue, NW, Washington, DC 20230 (or via the Internet at MClayton@doc.gov).

Written comments and recommendations for the proposed information collection should be sent within 30 days of publication of this notice to David Rostker, OMB Desk Officer, Room 10202, New Executive Office Building, Washington, DC 20503.

Dated: January 10, 2002.

Madeleine Clayton,

Departmental Paperwork Clearance Officer, Office of the Chief Information Officer.

[FR Doc. 02–1138 Filed 1–15–02; 8:45 am]

BILLING CODE 3510–22–S

DEPARTMENT OF COMMERCE

[I.D. 011102B]

Submission for OMB Review; Comment Request

The Department of Commerce has submitted to the Office of Management and Budget (OMB) for clearance the following proposal for collection of information under the provisions of the Paperwork Reduction Act (44 U.S.C. Chapter 35).

Agency: National Oceanic and Atmospheric Administration (NOAA).

Title: Billfish Tagging Report.

Form Number(s): NOAA Form 88–162.

OMB Approval Number: 0648–0009.

Type of Request: Regular submission.

Burden Hours: 62.

Number of Respondents: 750.

Average Hours Per Response: 5 minutes.

Needs and Uses: The National Oceanic and Atmospheric

Administration's Southwest Fishery Science Center operates an angler-based billfish tagging program. Tagging supplies are provided to volunteers. When they catch and tag fish, they submit a brief report on the fish tagged and the location of tagging. The information obtained is used in conjunction with tag returns to determine billfish migration patterns, mortality rates, and similar information useful in the management of the fishery.

Affected Public: Individuals or households.

Frequency: On occasion.

Respondent's Obligation: Voluntary.

OMB Desk Officer: David Rostker, (202) 395–3897.

Copies of the above information collection proposal can be obtained by calling or writing Madeleine Clayton, Departmental Paperwork Clearance Officer, (202) 482–3129, Department of Commerce, Room 6086, 14th and Constitution Avenue, NW, Washington, DC 20230 (or via the Internet at MClayton@doc.gov).

Written comments and recommendations for the proposed information collection should be sent within 30 days of publication of this notice to David Rostker, OMB Desk Officer, Room 10202, New Executive Office Building, Washington, DC 20503.

Dated: January 10, 2002.

Madeleine Clayton,

Departmental Paperwork Clearance Officer, Office of the Chief Information Officer.

[FR Doc. 02–1139 Filed 1–15–02; 8:45 am]

BILLING CODE 3510–22–S

DEPARTMENT OF COMMERCE

[I.D. 011102C]

Submission for OMB Review; Comment Request

The Department of Commerce has submitted to the Office of Management and Budget (OMB) for clearance the following proposal for collection of information under the provisions of the Paperwork Reduction Act (44 U.S.C. chapter 35).

Agency: National Oceanic and Atmospheric Administration (NOAA).

Title: Statement of Financial Interests, Regional Fishery Management Councils.

Form Number(s): NOAA Form 88–195.

OMB Approval Number: 0648–0192.

Type of Request: Regular submission.

Burden Hours: 110.

Number of Respondents: 188.

Average Hours Per Response: 35 minutes.

Needs and Uses: The Magnuson-Stevens Fishery Conservation and Management Act authorizes the establishment of Regional Fishery Management Councils to exercise sound judgement in the stewardship of fishery resources through the preparation, monitoring, and revision of such plans under circumstances (a) which will enable the States, the fishing industry, consumer and environmental organizations, and other interested persons to participate in, and advise on, the establishment and administration of such plans, and (b) which take into account the social and economic needs of the States. Section 302 (j) of the Act, requires that Council members and Executive Directors disclose their financial interests in any harvesting, processing, or marketing activity that is being, or will be, undertaken within any fishery over which the Council concerned has jurisdiction.

The Act further provides that a member shall not vote on a Council decision which would have a significant and predictable effect on such financial interest. A Council decision shall be considered to have a significant and predictable effect on a financial interest if there is a close, causal link between the Council decision and an expected and substantially disproportionate benefit to the financial interest of the affected individual relative to the financial interest of other participants in the same gear type or sector of the fishery. However, an affected individual who is declared ineligible to vote on a Council action may participate in Council deliberations relating to the decision after notifying the Council of his/her recusal and identifying the financial interest that would be affected.

Affected Public: Individuals or households.

Frequency: On occasion; annually.

Respondent's Obligation: Mandatory.

OMB Desk Officer: David Rostker, (202) 395–3897.

Copies of the above information collection proposal can be obtained by calling or writing Madeleine Clayton, Departmental Paperwork Clearance Officer, (202) 482–3129, Department of Commerce, Room 6086, 14th and Constitution Avenue, NW, Washington, DC 20230 (or via the Internet at MClayton@doc.gov).

Written comments and recommendations for the proposed information collection should be sent within 30 days of publication of this notice to David Rostker, OMB Desk Officer, Room 10202, New Executive Office Building, Washington, DC 20503.

Dated: January 10, 2002.

Madeleine Clayton,

Departmental Paperwork Clearance Officer, Office of the Chief Information Officer.

[FR Doc. 02–1140 Filed 1–15–02; 8:45 am]

BILLING CODE 3510–22–S

DEPARTMENT OF COMMERCE

[I.D. 011102D]

Submission for OMB Review; Comment Request

The Department of Commerce has submitted to the Office of Management and Budget (OMB) for clearance the following proposal for collection of information under the provisions of the Paperwork Reduction Act (44 U.S.C. chapter 35).

Agency: National Oceanic and Atmospheric Administration (NOAA).

Title: Southeast Region Bycatch Reduction Device Certification Family of Forms.

Form Number(s): None.

OMB Approval Number: 0648–0345.

Type of Request: Regular submission.

Burden Hours: 7,500.

Number of Respondents: 31.

Average Hours Per Response: Submissions for certification in the Gulf of Mexico, 140 minutes for pre-certification; 180 minutes for pre-certification data; 140 minutes for a certification application; 20 minutes each for a vessel identification form, a gear specification form, a station sheet form, a turtle excluder device/bycatch reduction device specification form, a length frequency form, and a condition and fate form; 5 hours for a species characterization form; 4 hours for a final report; 1 hour for an observer certification or observer reference; 4 hours for testing; and 30 minutes for a submission of independent tests. Submissions for certification in the South Atlantic, 30 minutes each for a vessel identification form or a gear form; 2 hours for a station sheet bycatch reduction device evaluation form; 50 minutes for a length frequency form; 100 hours for testing; and 30 minutes for a submission of independent tests.

Needs and Uses: Persons seeking to obtain certification for bycatch reduction devices to be used on shrimp vessels in the Gulf of Mexico or South Atlantic must apply for authorization to conduct tests and submit the test results. Persons seeking certification to be observers for such tests in the Gulf of Mexico must file an application and provide two references. The information is needed for NOAA to determine if equipment meets the standards that

would allow its use in commercial fisheries.

Affected Public: Business or other for-profit organizations, individuals or households.

Frequency: On occasion.

Respondent's Obligation: Required to obtain or retain a benefit.

OMB Desk Officer: David Rostker, (202) 395–3897.

Copies of the above information collection proposal can be obtained by calling or writing Madeleine Clayton, Departmental Paperwork Clearance Officer, (202) 482–3129, Department of Commerce, Room 6086, 14th and Constitution Avenue, NW, Washington, DC 20230 (or via the Internet at MClayton@doc.gov).

Written comments and recommendations for the proposed information collection should be sent within 30 days of publication of this notice to David Rostker, OMB Desk Officer, Room 10202, New Executive Office Building, Washington, DC 20503.

Dated: January 10, 2002.

Madeleine Clayton,

Departmental Paperwork Clearance Officer, Office of the Chief Information Officer.

[FR Doc. 02–1141 Filed 1–15–02; 8:45 am]

BILLING CODE 3510–22–S

DEPARTMENT OF COMMERCE

[I.D. 011102E]

Submission for OMB Review; Comment Request

The Department of Commerce has submitted to the Office of Management and Budget (OMB) for clearance the following proposal for collection of information under the provisions of the Paperwork Reduction Act (44 U.S.C. chapter 35).

Agency: National Oceanic and Atmospheric Administration (NOAA).

Title: Alaska Marine Sport Fishing Economics Survey.

Form Number(s): None.

OMB Approval Number: None.

Type of Request: Regular submission.

Burden Hours: 1.048.

Number of Respondents: 3,740.

Average Hours Per Response: 20 minutes to respond to a mail survey; 5 minutes to respond to a follow-up phone survey.

Needs and Uses: The survey data is necessary to conduct required economic analyses of marine sport fisheries off Alaska. This data is currently not available for many areas and fisheries in Alaska. The survey data will be used to estimate the economic value of fishing to anglers, and how catch rates and fishery regulations affect that value. The respondents will be drawn from a random sample of U.S. residents who purchased an Alaska State sport fishing license in 2001. Follow-up calls will be made to people not responding to a mail survey.

Affected Public: Individuals or households.

Frequency: One-time.

Respondent's Obligation: Voluntary.

OMB Desk Officer: David Rostker, (202) 395–3897.

Copies of the above information collection proposal can be obtained by calling or writing Madeleine Clayton, Departmental Paperwork Clearance Officer, (202) 482–3129, Department of Commerce, Room 6086, 14th and Constitution Avenue, NW, Washington, DC 20230 (or via the Internet at MClayton@doc.gov).

Written comments and recommendations for the proposed information collection should be sent within 30 days of publication of this notice to David Rostker, OMB Desk Officer, Room 10202, New Executive Office Building, Washington, DC 20503.

Dated: January 10, 2002.

Madeleine Clayton,

Departmental Paperwork Clearance Officer, Office of the Chief Information Officer.

[FR Doc. 02–1142 Filed 1–15–02; 8:45 am]

BILLING CODE 3510–22–S

DEPARTMENT OF COMMERCE

Census Bureau

The American Community Survey; Proposed Collection; Comment Request

ACTION: Proposed collection; comment request.

SUMMARY: The Department of Commerce, as part of its continuing effort to reduce paper work and respondent burden, invites the general public and other federal agencies to take this opportunity to comment on proposed or continuing information collections, as required by the Paperwork Reduction Act of 1995, Public Law 104–13 (44 U.S.C. 3506(c)(2)(A)).

DATES: Written comments must be submitted on or before March 18, 2002.

ADDRESSES: Direct all written comments to Madeleine Clayton, Departmental Paperwork Clearance Officer, Department of Commerce, Room 6086, 14th and Constitution Avenue, NW, Washington, DC 20230 (or via the Internet at *mclayton@doc.gov*).

FOR FURTHER INFORMATION CONTACT: Requests for additional information or copies of the information collection instrument(s) and instructions should be directed to Lawrence McGinn, U.S. Census Bureau, Demographic Surveys Division, Washington, DC 20233. Phone: (301) 457–8050.

SUPPLEMENTARY INFORMATION:

I. Abstract

Given the rapid demographic changes experienced in recent years and the strong expectation that such changes will continue and accelerate, the once-a-decade data collection approach of a decennial census is no longer acceptable. To meet the needs and expectations of the country, the Census Bureau developed the American Community Survey. This survey will collect long-form data every month and provide tabulations of these data on a yearly basis. In the past, the long-form data were collected only at the time of each decennial census. The American Community Survey will allow the Census Bureau to remove the long form from the 2010 Census, thus reducing operational risks, improving accuracy, and providing more relevant data. After years of development and testing, the American Community Survey is ready for full implementation in FY 2003.

The American Community Survey will provide more timely information for critical economic planning by governments and the private sector. In the current information-based economy, federal, state, tribal, and local decisionmakers, as well as private business and nongovernmental organizations, need current, reliable, and comparable socioeconomic data to chart the future. The American Community Survey will provide up-to-date profiles of American communities every year beginning in 2004, providing policymakers, planners, and service providers in the public and private sectors with information every year—not just every ten years.

The American Community Survey must begin full implementation in 2003 to provide comparable data at the census tract level by July 2008. These data are needed by federal agencies and others to provide assurance of long-form type data availability before eliminating the long form from the 2010 Census.

The American Community Survey demonstration period began in 1996 in four sites. In 1999, the number of sites was increased to 31 comparison sites. The comparison with Census 2000 was designed to collect several kinds of information necessary to understand the differences between data from the 1999–2002 American Community Survey and

data from the 2000 long form. The purpose of the comparison sites was to give a good tract-by-tract comparison between the 1999–2002 American Community Survey cumulated estimates and the Census 2000 long-form estimates and to use these comparisons to identify both the causes of differences and diagnostic variables that tend to predict a certain kind of difference.

In 2000–2002, the Census Bureau conducted the Census 2000 Supplementary Survey, the 2001 Supplementary Survey, and the 2002 Supplementary Survey using the American Community Survey methodology. Each of these surveys had a sample of approximately 700,000 residential addresses per year. These surveys were conducted to study the operational feasibility of collecting long-form type data in a different methodology from the decennial census, demonstrate the reliability and stability of state and large area estimates over time, and demonstrate the usability of multiyear estimates.

For 2003–2005, the Census Bureau plans to conduct the American Community Survey in every part of the United States and also in Puerto Rico. In November 2002, the Census Bureau will begin full implementation of the American Community Survey by increasing the sample to a total of 250,000 residential addresses per month in the 50 states and the District of Columbia and 3,000 residential addresses per month in Puerto Rico. Data will be collected by mail and Census Bureau staff will follow up with households that do not respond using computer-assisted telephone interviewing (CATI) and computer-assisted personal interviewing (CAPI).

In addition to selecting a sample of residential addresses, the Census Bureau plans to select a sample of group quarters (GQs) and conduct the American Community Survey with a sample of persons within the GQs starting in January 2004. The Census Bureau will also conduct a reinterview operation with a small sample of households to monitor the quality of data collected during the CAPI.

II. Method of Collection

The Census Bureau will mail questionnaires to households selected for the American Community Survey. For households that do not return a questionnaire, Census Bureau staff will attempt to conduct interviews via CATI. We will also conduct CAPI interviews for a subsample of nonrespondents.

For most types of GQs, Census Bureau field representatives (FRs) will either help respondents complete questionnaires or leave questionnaires and ask respondents to return them by mail. For a few GQs, the FRs will attempt to conduct interviews by telephone.

The Census Bureau staff will provide Telephone Questionnaire Assistance (TQA).

The Census Bureau staff will conduct reinterviews using CAPI.

III. Data

OMB Number: 0607–0810.

Form Number(s): ACS–1, ACS–1 (GQ), ACS–3 (GQ), ACS–4(GQ), ACS–290.

Type of Review: Regular.

Affected Public: Individuals and households.

Estimated Number of Respondents: During the period of November 2002 through October 2005, we plan to contact 9,105,000 households, 40,000 persons in group quarters, and 81,000 households for reinterview.

Estimated Time Per Response: Estimates are 38 minutes per household, 15 minutes per person in group quarters, and 10 minutes per household in the reinterview sample.

Estimated Total Annual Burden Hours: 1,930,000 hours.

Estimated Total Annual Cost: Except for their time, there is no cost to respondents.

Respondent Obligation: Mandatory.

Authority: Title 13, United States Code, Section 182.

IV. Request for Comments

Comments are invited on: (a) Whether the proposed collection of information is necessary for the proper performance of the functions of the agency, including whether the information shall have practical utility; (b) the accuracy of the agency's estimate of the burden (including hours and cost) of the proposed collection of information; (c) ways to enhance the quality, utility, and clarity of the information to be collected; and (d) ways to minimize the burden of the collection of information on respondents, including through the use of automated collections techniques or other forms of information technology.

Comments submitted in response to this notice will be summarized and included in the request for the OMB approval of this information collection; they also will become a matter of public record.

Dated: January 10, 2002.

Madeleine Clayton,

Departmental Paperwork Clearance Officer, Office of the Chief Information Officer.

[FR Doc. 02–1033 Filed 1–15–02; 8:45 am]

BILLING CODE 3510–07–P

DEPARTMENT OF COMMERCE

Census Bureau

2002 Economic Census Covering the Manufacturing Sector; Proposed Collection; Comment Request

ACTION: Proposed collection; comment request.

SUMMARY: The Department of Commerce, as part of its continuing effort to reduce paperwork and respondent burden, invites the general public and other Federal agencies to take this opportunity to comment on proposed and/or continuing information collections, as required by the Paperwork Reduction Act of 1995, Public Law 104–13 (44 U.S.C. 3506(c)(2)(A)).

DATES: Written comments must be submitted on or before March 18, 2002.

ADDRESSES: Direct all written comments to Madeleine Clayton, Departmental Paperwork Clearance Officer, Department of Commerce, Room 6086, 14th and Constitution Avenue, NW., Washington, DC 20230 (or via the Internet at *MClayton@doc.gov*).

FOR FURTHER INFORMATION CONTACT: Requests for additional information or copies of the information collection instrument(s) and instructions should be directed to Mendel D. Gayle, U.S. Census Bureau, Manufacturing and Construction Division, Room 2108, Building 4, Washington, DC 20233, (301) 457–4769, (or via the Internet at *mendel.d.gayle@census.gov*).

SUPPLEMENTARY INFORMATION:

I. Abstract

The Census Bureau is the preeminent collector and provider of timely, relevant and quality data about the people and economy of the United States. Economic data are the Census Bureau's primary program commitment during nondecennial census years. The economic census, conducted under authority of Title 13, United States Code, is the primary source of facts about the structure and functioning of the Nation's economy and features unique industry and geographic detail. Economic census statistics serve as part of the framework for the national accounts and provide essential information for government, business and the general public. The 2002 Economic Census Covering the Manufacturing Sector will measure the economic activity for more than 400,000 manufacturing establishments.

The information collected from companies in the manufacturing sector

of the economic census will produce basic statistics by industry for number of establishments, payroll, employment, value of shipments, value added, capital expenditures, depreciation, materials consumed, selected purchased services, electric energy used and inventories held. Primary strategies for reducing burden in the Census Bureau economic data collections are to increase electronic reporting through broader use of computerized self-administered census questionnaires, electronic data interchange, and other electronic data collection methods.

II. Method of Collection

Establishments included in this collection will be selected from a frame provided by the Census Bureau's Business Register. To be eligible for selection, an establishment will be required to satisfy the following conditions: (i) It must be classified in the manufacturing sector; (ii) it must be an active operating establishment of a multi-establishment company, or it must be an operating single-establishment company with payroll; and (iii) it must be located in one of the 50 states or the District of Columbia. Most establishments will be included in the mail portion of the collection. Forms tailored for the particular kind of business will be mailed to the establishment to be filled out and returned. Establishments not meeting certain cutoffs for payroll will be included in the non-mail portion of the collection. We will use administrative data in lieu of collecting data directly from these establishments.

Mail selection procedures will distinguish several groups of establishments. Establishment selection to a particular group is based on a number of factors. The more important considerations are the size of the company and whether it is included in the intercensal Annual Survey of Manufactures (ASM) sample panel. The ASM panel is representative of both large and small establishments from the mail component of the manufacturing census. The ASM sample panel includes approximately 55,000 establishments. The various groups of establishments that will constitute the 2002 Economic Census are outlined below.

A. Establishments of Multi-Establishment Companies

Selection procedures will assign eligible establishments of multi-establishment companies to the mail components of the potential respondent universe.

We estimate that the census mail canvass for 2002 will include the following:

1. *ASM sample establishments:* 32,000.
2. *Non-ASM:* 50,000.

B. Single-Establishment Companies Engaged in Manufacturing Activity With Payroll

As an initial step in the selection process, we will conduct a study of the potential respondent universe for manufacturing. The study of potential respondents will produce a set of industry-specific payroll cutoffs that we will use to distinguish large versus small-establishment companies within each industry. This payroll size distinction will affect selection as follows:

1. Large Single-Establishment Companies

Single-establishment companies having annualized payroll (from Federal administrative records) that equals or exceeds the cutoff for their industry will be assigned to the mail component of the potential respondent universe.

We estimate that the census mail canvass for 2002 will include the following:

a. *ASM sample establishments:* 23,000.
b. *Non-ASM:* 101,000.

2. Small Single-Establishment Companies

In selected industries, small single-establishment companies that satisfy a particular criteria (administrative record payroll cutoff) will receive a manufacturing short form, which will collect a reduced amount of basic statistics and other essential information that is not available from administrative records.

We estimate that the census mail canvass for 2002 will include approximately 54,000 companies in this category. This category does not contain ASM establishments.

3. All remaining single-establishment companies with payroll will be represented in the census by data estimated from Federal administrative records. Generally, we do not include these small employers in the census mail canvass.

We estimate that this category for 2002 will include approximately 140,000 manufacturing companies.

III. Data

OMB Number: Not available.

Form Number: The forms used to collect information from businesses in these sectors of the economic census are tailored to specific business practices and are too numerous to list separately in this notice. You can obtain information on the proposed content of the forms by calling Mendel D. Gayle on (301) 457–4769 (or via the Internet at *mendel.d.gayle@census.gov*).

Type of Review: Regular review.

Affected Public: Business or Other for Profit, Non-profit Institutions, Small Businesses or Organizations, and State or Local Governments.

Estimated Number of Respondents:

ASM—55,000
Non-ASM (Long Form)—151,000
Non-ASM (Short Form)—54,000
Total—260,000

Estimated Time Per Response:

ASM—5.6 hrs.
Non-ASM (Long Form)—3.4 hrs.
Non-ASM (Short Form)—2.2 hrs.

Estimated Total Annual Burden Hours:

ASM—308,000
Non-ASM (Long Form)—513,400
Non-ASM (Short Form)—118,800
Total—940,200

Estimated Total Annual Cost: $14,403,864.

Respondent's Obligation: Mandatory.

Legal Authority: Title 13, United States Code, Sections 131 and 224.

IV. Request for Comments

Comments are invited on: (a) Whether the proposed collection of information is necessary for the proper performance of the functions of the agency, including whether the information shall have practical utility; (b) the accuracy of the agency's estimate of the burden (including hours and cost) of the proposed collection of information; (c) ways to enhance the quality, utility, and clarity of the information to be collected; and (d) ways to minimize the burden of the collection of information on respondents, including through the use of automated collection techniques or other forms of information technology.

Comments submitted in response to this notice will be summarized and/or included in the request for OMB approval of this information collection; they also will become a matter of public record.

Dated: January 10, 2002.

Madeleine Clayton,

Departmental Paperwork Clearance Officer, Office of the Chief Information Officer.

[FR Doc. 02–1034 Filed 1–15–02; 8:45 am]

BILLING CODE 3510–07–P

DEPARTMENT OF COMMERCE

Economic Development Administration

Petition by a Firm for Certification of Eligibility To Apply for Trade Adjustment Assistance

ACTION: Extension of a currently approved collection, comment request.

The Department of Commerce (DoC) has submitted to the Office of Management and Budget (OMB) for clearance the following proposal for collection of information under provisions of the Paperwork Reduction Act (44 U.S.C. Chapter 5).

Agency: Economic Development Administration (EDA).

Title: Petition by a Firm for Certification of Eligibility to Apply for Trade Adjustment Assistance.

Agency Form Number: ED–840.

OMB Approval Number: 0610–0091.

Type of Request: Extension of a currently approved collection.

Burden: 1,544 hours.

Average Hours Per Response: 8 hours.

Number of Respondents: 193 respondents.

Needs and Uses: The information collection is needed to determine whether a firm is eligible to apply for trade adjustment assistance. This assistance helps U.S. manufacturing firms injured by imports to develop strategies for competing in the global market place. The information submitted is a major phase in obtaining a firm's history, including sales, production and employment data (the firm provides quarterly unemployment security forms submitted to the state, a description of the products produced by such firm, tax returns and/or financial statements, a firm's decline in sales accounts, and brochures of such firm's production). The information collection provides an essential tool for firms to use in submitting the information required to demonstrate that they qualify for certification of eligibility. The information is required under section 251 of the Trade Act of 1974, as amended.

Affected Public: Businesses, farms or other for-profit organizations.

Frequency: One time.

Respondent's Obligation: Required to obtain or retain benefits.

OMB Desk Officer: David Rostker, (202) 395–7340.

Copies of the above information collection proposal can be obtained by calling or writing Madeleine G. Clayton, DoC Forms Clearance Officer, (202) 482–3129, U.S. Department of Commerce, Room 6086, 14th and Constitution Avenue, NW., Washington, DC 20230. Written comments and recommendations for the proposed information collection should be sent within 30 days of publication of this notice to David Rostker, OMB Desk Officer, Room 10202, New Executive Office Building, Washington, DC 20503.

Dated: January 10, 2002.

Madeleine G. Clayton,

Departmental Forms Clearance Officer, Office of the Chief Information Officer.

[FR Doc. 02–1041 Filed 1–15–02; 8:45 am]

BILLING CODE 3510–34–P

DEPARTMENT OF COMMERCE

International Trade Administration

[A–570–870]

Notice of Postponement of Final Determination of Antidumping Duty Investigation: Certain Circular Welded Carbon-Quality Steel Pipe From the People's Republic of China

AGENCY: Import Administration, International Trade Administration, Department of Commerce.

ACTION: Notice of postponement of final determination of antidumping duty investigation.

EFFECTIVE DATE: January 16, 2002.

FOR FURTHER INFORMATION CONTACT: Alex Villanueva or Bob Bolling, Office IX, DAS Group III, Import Administration, International Trade Administration, U.S. Department of Commerce, 14th Street and Constitution Avenue NW., Washington, DC 20230; telephone (202) 482–6412 and (202) 482–3434, respectively.

The Applicable Statute and Regulations

Unless otherwise indicated, all citations to the statute are references to the provisions effective January 1, 1995, the effective date of the amendments made to the Tariff Act of 1930 (the Act) by the Uruguay Round Agreements Act (URAA). In addition, unless otherwise indicated, all citations to Department of Commerce (the Department) regulations refer to the regulations codified at 19 CFR part 351 (2001).

Background

This investigation was initiated on June 13, 2001. *See Notice of Initiation of Antidumping Duty Investigation: Certain Circular Welded Carbon-Quality Steel Pipe from the People's Republic of China,* 66 FR 33227 (June 21, 2001). The period of investigation (POI) is October 1, 2000 through March 31, 2001. On December 31, 2001, the Department published the notice of preliminary determination. *See Notice of Preliminary Determination of Sales at Less Than Fair Value: Certain Circular Welded Carbon-Quality Steel Pipe from the People's Republic of China,* 66 FR 67500 (December 31, 2001).

Postponement of Final Determination and Extension of Provisional Measures

Section 735(a)(2) of the Act provides that a final determination may be postponed until not later than 135 days after the date of the publication of the preliminary determination if, in the event of an affirmative preliminary determination, a request for such postponement is made by exporters who account for a significant proportion of exports of the subject merchandise, or in the event of a negative preliminary determination, a request for such postponement is made by petitioner. The Department's regulations, at 19 CFR 351.210(e)(2), require that requests by respondents for postponement of a final determination be accompanied by a request for extension of provisional measures from a four-month period to not more than six months.

On December 17, 2001 Tianjin Shuang Jie Steel Pipe Co., Ltd (Shuang Jie) requested that the Department postpone its final determination until no later than 135 days after the date of the publication of the preliminary determination in the **Federal Register** and requested an extension of the provisional measures pursuant to 19 CFR 351.210(e)(2). In accordance with section 735(a)(2) of the Act and 19 CFR 351.210(b), because (1) our preliminary determination was affirmative, (2) Shuang Jie accounts for a significant proportion of exports of the subject merchandise, and (3) no compelling reasons for denial exist, we are granting Shuang Jie's request and are postponing the final determination until no later than 135 days after the publication of preliminary determination in the **Federal Register**. We are also extending the provisional measures, from four months to six months, in accordance with 19 CFR 351.210(e)(2). Suspension of liquidation will be extended accordingly.

Therefore, the final results are now due on May 15, 2002. This notice is published in accordance with section 735(a)(2) of the Act.

Dated: January 9, 2002.

Faryar Shirzad,

Assistant Secretary for Import Administration.

[FR Doc. 02–1129 Filed 1–15–02; 8:45 am]

BILLING CODE 3510–DS–P

DEPARTMENT OF COMMERCE

International Trade Administration

[A–588–837]

Large Newspaper Printing Presses and Components Thereof, Whether Assembled or Unassembled, From Japan: Final Results of Antidumping Duty Administrative Review and Revocation in Part

AGENCY: Import Administration, International Trade Administration, Department of Commerce.

ACTION: Notice of final results of antidumping duty administrative review and revocation in part.

SUMMARY: On October 9, 2001, the Department of Commerce published the preliminary determination to rescind the administrative review, in part, and to revoke the order, in part, and the preliminary results of the administrative review of the antidumping duty order on large newspaper printing presses and components thereof, whether assembled or unassembled, from Japan. The review covers Tokyo Kikai Seisakusho, Ltd., a manufacturer/exporter of the subject merchandise to the United States. The period of review is September 1, 1999, through August 31, 2000.

No interested party submitted comments on our preliminary results. We have made no changes to the margin calculation. Therefore, the final results do not differ from the preliminary results. The final weighted-average dumping margin for Tokyo Kikai Seisakusho, Ltd. is listed below in the ''Final Results of Review'' section of this notice.

In addition, we have made a final determination to rescind the administrative review with respect to Mitsubishi Heavy Industries, Ltd., and to revoke the antidumping duty order with respect to Tokyo Kikai Seisakusho, Ltd.

EFFECTIVE DATE: January 16, 2002.

FOR FURTHER INFORMATION CONTACT: David J. Goldberger, or Kate Johnson, Office 2, AD/CVD Enforcement Group I, Import Administration—Room B099, International Trade Administration, U.S. Department of Commerce, 14th Street and Constitution Avenue, NW., Washington, DC 20230; telephone: (202) 482–4136, or 482–4929, respectively.

SUPPLEMENTARY INFORMATION:

The Applicable Statute

Unless otherwise indicated, all citations to the Tariff Act of 1930, as amended (the Act), are references to the provisions effective January 1, 1995, the effective date of the amendments made to the Act by the Uruguay Round Agreements Act. In addition, unless otherwise indicated, all citations to the Department of Commerce's (the Department's) regulations are to 19 CFR part 351 (April 2000).

Background

This review covers one manufacturer/exporter, Tokyo Kikai Seisakusho, Ltd. (TKS).

On October 9, 2001, the Department of Commerce published in the **Federal Register** the preliminary results of administrative review of the antidumping duty order on large newspaper printing presses (LNPP) and components thereof, whether assembled or unassembled, from Japan (66 FR 51379) (*Preliminary Results*).

We invited parties to comment on the preliminary results of the review. TKS submitted a case brief on November 8, 2001. On December 4, 2001, TKS withdrew its case brief from the record of this review. No other interested party submitted comments. The Department has conducted this administrative review in accordance with section 751 of the Act.

Scope of the Order

The products covered by the order are large newspaper printing presses, including press systems, press additions and press components, whether assembled or unassembled, whether complete or incomplete, that are capable of printing or otherwise manipulating a roll of paper more than two pages across. A page is defined as a newspaper broadsheet page in which the lines of type are printed perpendicular to the running of the direction of the paper or a newspaper tabloid page with lines of type parallel to the running of the direction of the paper.

In addition to press systems, the scope of the order includes the five press system components. They are: (1) A printing unit, which is any component that prints in monocolor, spot color and/or process (full) color; (2) a reel tension paster (RTP), which is any component that feeds a roll of paper more than two newspaper broadsheet pages in width into a subject printing unit; (3) a folder, which is a module or combination of modules capable of cutting, folding, and/or delivering the paper from a roll or rolls of newspaper broadsheet paper more than two pages in width into a newspaper format; (4) conveyance and access apparatus capable of manipulating a roll of paper more than two newspaper broadsheet pages across through the production process and which provides structural support and access; and (5) a computerized control system, which is any computer equipment and/or software designed specifically to control, monitor, adjust, and coordinate the functions and operations of large newspaper printing presses or press components.

A press addition is comprised of a union of one or more of the press components defined above and the equipment necessary to integrate such components into an existing press system.

Because of their size, large newspaper printing press systems, press additions, and press components are typically shipped either partially assembled or unassembled, complete or incomplete, and are assembled and/or completed prior to and/or during the installation process in the United States. Any of the five components, or collection of components, the use of which is to fulfill a contract for large newspaper printing press systems, press additions, or press components, regardless of degree of assembly and/or degree of combination with non-subject elements before or after importation, is included in the scope of this order. Also included in the scope are elements of a LNPP system, addition or component, which taken altogether, constitute at least 50 percent of the cost of manufacture of any of the five major LNPP components of which they are a part.

For purposes of the order, the following definitions apply irrespective of any different definition that may be found in Customs rulings, U.S. Customs law or the *Harmonized Tariff Schedule of the United States* (HTSUS): (1) The term ''unassembled'' means fully or partially unassembled or disassembled; and (2) the term ''incomplete'' means lacking one or more elements with which the LNPP is intended to be equipped in order to fulfill a contract for a LNPP system, addition or component.

This scope does not cover spare or replacement parts. Spare or replacement parts imported pursuant to a LNPP contract, which are not integral to the original start-up and operation of the LNPP, and are separately identified and valued in a LNPP contract, whether or not shipped in combination with covered merchandise, are excluded from the scope of this order. Used presses are also not subject to this scope. Used presses are those that have been previously sold in an arm's-length transaction to a purchaser that used them to produce newspapers in the ordinary course of business.

Also excluded from the scope, in accordance with the Department's determination in a changed-

circumstances antidumping duty administrative review of the order which resulted in the partial revocation of the order with respect to certain merchandise, are elements and components of LNPP systems, and additions thereto, which feature a 22 inch cut-off, 50 inch web width and a rated speed no greater than 75,000 copies per hour. *See Large Newspaper Printing Presses Components Thereof, Whether Assembled or Unassembled, from Japan: Final Results of Changed Circumstances Antidumping Duty Administrative Review and Intent to Revoke Antidumping Duty Order, In Part,* 64 FR 72315 (Dec. 27, 1999). In addition to the specifications set out in this paragraph, all of which must be met in order for the product to be excluded from the scope of the order, the product must also meet all of the specifications detailed in the five numbered sections following this paragraph. If one or more of these criteria is not fulfilled, the product is not excluded from the scope of the order.

1. *Printing Unit:* A printing unit which is a color keyless blanket-to-blanket tower unit with a fixed gain infeed and fixed gain outfeed, with a rated speed no greater than 75,000 copies per hour, which includes the following features:

- Each tower consisting of four levels, one or more of which must be populated.
- Plate cylinders which contain slot lock-ups and blanket cylinders which contain reel rod lock-ups both of which are of solid carbon steel with nickel plating and with bearers at both ends which are configured in-line with bearers of other cylinders.
- Keyless inking system which consists of a passive feed ink delivery system, an eight roller ink train, and a non-anilox and non-porous metering roller.
- The dampener system which consists of a two nozzle per page spraybar and two roller dampener with one chrome drum and one form roller.
- The equipment contained in the color keyless ink delivery system is designed to achieve a constant, uniform feed of ink film across the cylinder without ink keys. This system requires use of keyless ink which accepts greater water content.

2. *Folder:* A module which is a double 3:2 rotary folder with 160 pages collect capability and double (over and under) delivery, with a cut-off length of 22 inches. The upper section consists of three-high double formers (total of 6) with six sets of nipping rollers.

3. *RTP:* A component which is of the two-arm design with core drives and core brakes, designed for 50 inch diameter rolls; and arranged in the press line in the back-to-back configuration (left and right hand load pairs).

4. *Conveyance and Access Apparatus:* Conveyance and access apparatus capable of manipulating a roll of paper more than two newspaper broadsheets across through the production process, and a drive system which is of conventional shafted design.

5. *Computerized Control System:* A computerized control system, which is any computer equipment and/or software designed specifically to control, monitor, adjust, and coordinate the functions and operations of large newspaper printing presses or press components.

Further, this order covers all current and future printing technologies capable of printing newspapers, including, but not limited to, lithographic (offset or direct), flexographic, and letterpress systems. The products covered by this order are imported into the United States under subheadings 8443.11.10, 8443.11.50, 8443.30.00, 8443.59.50, 8443.60.00, and 8443.90.50 of the HTSUS. Large newspaper printing presses may also enter under HTSUS subheadings 8443.21.00 and 8443.40.00. Large newspaper printing press computerized control systems may enter under HTSUS subheadings 8471.49.10, 8471.49.21, 8471.49.26, 8471.50.40, 8471.50.80, and 8537.10.90. Although the HTSUS subheadings are provided for convenience and customs purposes, our written description of the scope of the order is dispositive.

Duty Absorption

On September 29, 2000, the petitioner requested that the Department determine whether antidumping duties had been absorbed during the period of review (POR). Section 751(a)(4) of the Act provides for the Department, if requested, to determine during an administrative review initiated two or four years after the publication of the order, whether antidumping duties have been absorbed by a foreign producer or exporter, if the subject merchandise is sold in the United States through an affiliated importer. In this case, TKS sold to the United States through an importer that is affiliated within the meaning of section 771(33) of the Act.

Because this review was initiated four years after the publication of the antidumping duty order, we will make a duty absorption determination in this segment of the proceeding. As we have found that there is no dumping margin for TKS with respect to its U.S. sales, we have also found that there is no duty absorption for purposes of the final results.

Rescission of Administrative Review

Mitsubishi Heavy Industries, Ltd. (MHI) notified the Department that it had not made any U.S. sales or entries of subject merchandise during the POR. Accordingly, in the preliminary results, we made a preliminary determination to rescind this review with respect to MHI. As we have not received any comments on this determination, we are rescinding this review with respect to MHI.

Determination To Revoke Order in Part

The Department ''may revoke, in whole or in part,'' an antidumping duty order upon completion of a review under section 751 of the Act. While Congress has not specified the procedures that the Department must follow in revoking an order, the Department has developed a procedure for revocation that is described in 19 CFR 351.222. This regulation requires, *inter alia*, that a company requesting revocation must submit the following: (1) A certification that the company has sold the subject merchandise at not less than normal value (NV) in the current review period and that the company will not sell at less than NV in the future; (2) a certification that the company sold the subject merchandise in each of the three years forming the basis of the request in commercial quantities; and (3) an agreement to reinstatement of the order if the Department concludes that the company, subsequent to the revocation, sold subject merchandise at less than NV. *See* 19 CFR 351.222(e)(1). Upon receipt of such a request, the Department will revoke an order, in part, if it concludes that: (1) The company in question has sold subject merchandise at not less than NV for a period of at least three consecutive years; (2) the continued application of the antidumping order is not otherwise necessary to offset dumping; and (3) the company has agreed in writing to immediate reinstatement of the order if the Department concludes that the company, subsequent to the revocation, sold subject merchandise at less than NV. *See* 19 CFR part 351.222(b)(2).

In the preliminary results, we found that TKS met the requirements for revocation (*see Preliminary Results*). We received no comments on this determination. Accordingly, we have determined that the Department's requirements for revocation have been met. Based on the final results in this review and the final results of the two preceding reviews, TKS has demonstrated three consecutive years of

sales at not less than NV. Furthermore, we find that TKS's aggregate sales to the United States have been made in commercial quantities during each of those years. In the particular situation of LNPPs, one sale, which may be worth millions of dollars, constitutes a commercial quantity. TKS had at least one sale in each of the three reviews. Finally, based on our review of the record, there is no basis to find continued application of the order is necessary to offset dumping.

Therefore, for the reasons discussed above, we find that TKS qualifies for revocation of the order on LNPPs which it produces and exports to the United States under 19 CFR 351.222(b)(2)(ii).

Final Results of the Review

Our final results remain unchanged from the preliminary results. The following weighted-average margin percentage applies to TKS for the period September 1, 1999, through August 31, 2000:

Manufacturer/exporter	Percent margin
Tokyo Kikai Seisakusho, Ltd	0.00

Effective Date of Revocation

This revocation applies to all entries of subject merchandise that are produced by TKS and that are also exported by TKS, entered, or withdrawn from warehouse, for consumption on or after September 1, 2000. The Department will order the suspension of liquidation ended for all such entries and will instruct the Customs Service to release any cash deposits or bonds. The Department will further instruct the Customs Service to refund with interest any cash deposits on entries made after August 31, 2000.

Assessment Rates

The Department shall determine, and the Customs Service shall assess, antidumping duties on all appropriate entries. The Department will issue appraisement instructions directly to the Customs Service. In accordance with 19 CFR part 351.106(c)(2), we will instruct the Customs Service to liquidate without regard to antidumping duties all entries of the subject merchandise for which the importer-specific assessment rate is zero or *de minimis* (*i.e.*, less than 0.50 percent).

This notice serves as a final reminder to importers of their responsibility under 19 CFR 351.402(f)(2) to file a certificate regarding the reimbursement of antidumping duties prior to liquidation of the relevant entries during this review period. Failure to comply with this requirement could result in the Secretary's presumption that reimbursement of antidumping duties occurred and the subsequent assessment of double antidumping duties.

Cash Deposit Requirements

The following deposit requirements shall be effective for all shipments of the subject merchandise from Japan that are entered, or withdrawn from warehouse, for consumption on or after the publication date of the final results of this administrative review, as provided for by section 751(a)(1) of the Act: (1) Cash deposits for TKS will no longer be required and the suspension of liquidation will cease for entries made on or after September 1, 2000; (2) for previously investigated companies not listed above, the cash deposit rate will continue to be the company-specific rate published for the most recent period; (3) if the exporter is not a firm covered in this review, or the original investigation, but the manufacturer is, the cash deposit rate will be the rate established for the most recent period for the manufacturer of the merchandise; and (4) the cash deposit rate for all other manufacturers or exporters of this merchandise will continue to be 58.69 percent, the all others rate made effective by the less-than-fair-value investigation. These requirements, when imposed, shall remain in effect until publication of the final results of the next administrative review.

This notice serves as the only reminder to parties subject to administrative protective order (APO) of their responsibility concerning the disposition of proprietary information disclosed under APO in accordance with 19 CFR part 351.305(a)(3). Timely written notification of return/destruction of APO materials or conversion to judicial protective order is hereby requested. Failure to comply with the regulation and the terms of an APO is a sanctionable violation.

This administrative review and notice are issued and published in accordance with sections 751(a)(1) and 777(i)(1) of the Act and 19 CFR part 351.221.

Dated: January 9, 2002.

Faryar Shirzad,

Assistant Secretary for Import Administration.

[FR Doc. 02–1130 Filed 1–15–02; 8:45 am]

BILLING CODE 3510–DS–P

DEPARTMENT OF COMMERCE

International Trade Administration

[A–428–821]

Large Newspaper Printing Presses and Components Thereof, Whether Assembled or Unassembled, From Germany: Final Results of Antidumping Duty Administrative Review

AGENCY: Import Administration, International Trade Administration, Department of Commerce.

ACTION: Notice of final results of antidumping duty administrative review.

SUMMARY: On October 9, 2001, the Department of Commerce published the preliminary results of the administrative review of the antidumping duty order on large newspaper printing presses and components thereof, whether assembled or unassembled, from Germany. The review covers MAN Roland Druckmaschinen AG, a manufacturer/exporter of the subject merchandise to the United States. The period of review is September 1, 1999, through August 31, 2000.

No interested party submitted comments on our preliminary results. We have made no changes to the margin calculation. Therefore, the final results do not differ from the preliminary results. The final weighted-average dumping margin for MAN Roland Druckmaschinen AG is listed below in the ''Final Results of Review'' section of this notice.

EFFECTIVE DATE: January 16, 2002.

FOR FURTHER INFORMATION CONTACT: David J. Goldberger, or Kate Johnson, Office 2, AD/CVD Enforcement Group I, Import Administration-Room B099, International Trade Administration, U.S. Department of Commerce, 14th Street and Constitution Avenue, NW., Washington, DC 20230; telephone: (202) 482–4136, or 482–4929, respectively.

SUPPLEMENTARY INFORMATION:

The Applicable Statute

Unless otherwise indicated, all citations to the Tariff Act of 1930, as amended (the Act), are references to the provisions effective January 1, 1995, the effective date of the amendments made to the Act by the Uruguay Round Agreements Act (URAA). In addition, unless otherwise indicated, all citations to the Department of Commerce's (the Department's) regulations are to 19 CFR part 351 (April 2000).

Background

This review covers one manufacturer/exporter, MAN Roland Druckmaschinen AG (MAN Roland).

On October 9, 2001, the Department of Commerce published in the **Federal Register** the preliminary results of administrative review of the antidumping duty order on large newspaper printing presses (LNPP) and components thereof, whether assembled or unassembled, from Germany (66 FR 51375) (*Preliminary Results*).

We invited parties to comment on the preliminary results of the review. MAN Roland submitted a case brief on November 8, 2001. On November 29, 2001, MAN Roland withdrew its case brief from the record of this review. No other interested party submitted comments. The Department has conducted this administrative review in accordance with section 751 of the Act.

Scope of the Order

The products covered by the order are large newspaper printing presses, including press systems, press additions and press components, whether assembled or unassembled, whether complete or incomplete, that are capable of printing or otherwise manipulating a roll of paper more than two pages across. A page is defined as a newspaper broadsheet page in which the lines of type are printed perpendicular to the running of the direction of the paper or a newspaper tabloid page with lines of type parallel to the running of the direction of the paper.

In addition to press systems, the scope of the order includes the five press system components. They are: (1) A printing unit, which is any component that prints in monocolor, spot color and/or process (full) color; (2) a reel tension paster (RTP), which is any component that feeds a roll of paper more than two newspaper broadsheet pages in width into a subject printing unit; (3) a folder, which is a module or combination of modules capable of cutting, folding, and/or delivering the paper from a roll or rolls of newspaper broadsheet paper more than two pages in width into a newspaper format; (4) conveyance and access apparatus capable of manipulating a roll of paper more than two newspaper broadsheet pages across through the production process and which provides structural support and access; and (5) a computerized control system, which is any computer equipment and/or software designed specifically to control, monitor, adjust, and coordinate the functions and operations of large newspaper printing presses or press components.

A press addition is comprised of a union of one or more of the press components defined above and the equipment necessary to integrate such components into an existing press system.

Because of their size, large newspaper printing press systems, press additions, and press components are typically shipped either partially assembled or unassembled, complete or incomplete, and are assembled and/or completed prior to and/or during the installation process in the United States. Any of the five components, or collection of components, the use of which is to fulfill a contract for large newspaper printing press systems, press additions, or press components, regardless of degree of assembly and/or degree of combination with non-subject elements before or after importation, is included in the scope of this order. Also included in the scope are elements of a LNPP system, addition or component, which taken altogether, constitute at least 50 percent of the cost of manufacture of any of the five major LNPP components of which they are a part.

For purposes of the order, the following definitions apply irrespective of any different definition that may be found in Customs rulings, U.S. Customs law or the *Harmonized Tariff Schedule of the United States* (HTSUS): (1) The term ''unassembled'' means fully or partially unassembled or disassembled; and (2) the term ''incomplete'' means lacking one or more elements with which the LNPP is intended to be equipped in order to fulfill a contract for a LNPP system, addition or component.

This scope does not cover spare or replacement parts. Spare or replacement parts imported pursuant to a LNPP contract, which are not integral to the original start-up and operation of the LNPP, and are separately identified and valued in a LNPP contract, whether or not shipped in combination with covered merchandise, are excluded from the scope of this order. Used presses are also not subject to this scope. Used presses are those that have been previously sold in an arm's-length transaction to a purchaser that used them to produce newspapers in the ordinary course of business.

Further, this order covers all current and future printing technologies capable of printing newspapers, including, but not limited to, lithographic (offset or direct), flexographic, and letterpress systems. The products covered by this order are imported into the United States under subheadings 8443.11.10, 8443.11.50, 8443.30.00, 8443.59.50, 8443.60.00, and 8443.90.50 of the HTSUS. Large newspaper printing presses may also enter under HTSUS subheadings 8443.21.00 and 8443.40.00. Large newspaper printing press computerized control systems may enter under HTSUS subheadings 8471.49.10, 8471.49.21, 8471.49.26, 8471.50.40, 8471.50.80, and 8537.10.90. Although the HTSUS subheadings are provided for convenience and customs purposes, our written description of the scope of the order is dispositive.

Duty Absorption

On September 29, 2000, the petitioner requested that the Department determine whether antidumping duties had been absorbed during the period of review. Section 751(a)(4) of the Act provides for the Department, if requested, to determine during an administrative review initiated two or four years after the publication of the order, whether antidumping duties have been absorbed by a foreign producer or exporter, if the subject merchandise is sold in the United States through an affiliated importer. In this case, MAN Roland sold to the United States through an importer that is affiliated within the meaning of section 771(33) of the Act.

Because this review was initiated four years after the publication of the antidumping duty order, we will make a duty absorption determination in this segment of the proceeding. As we have found that there is no dumping margin for MAN Roland with respect to its U.S. sales, we have also found that there is no duty absorption for purposes of the final results.

Final Results of the Review

Our final results remain unchanged from the preliminary results. The following weighted-average margin percentage applies to MAN Roland for the period September 1, 1999, through August 31, 2000:

Manufacturer/Exporter	Period	Margin (percent)
MAN Roland Druckmaschinen AG.	9/1/99–8/31/00	0.00

Assessment Rates

The Department shall determine, and the Customs Service shall assess, antidumping duties on all appropriate entries. The Department will issue appraisement instructions directly to the Customs Service. In accordance with 19 CFR 351.106(c)(2), we will instruct the Customs Service to liquidate without regard to antidumping duties all entries of the subject merchandise for which the importer-specific assessment rate is zero or *de minimis* (*i.e.*, less than 0.50 percent).

This notice serves as a final reminder to importers of their responsibility under 19 CFR 351.402(f)(2) to file a certificate regarding the reimbursement of antidumping duties prior to liquidation of the relevant entries during this review period. Failure to comply with this requirement could result in the Secretary's presumption that reimbursement of antidumping duties occurred and the subsequent assessment of double antidumping duties.

Cash Deposit Requirements

The following deposit requirements shall be effective for all shipments of the subject merchandise from Germany that are entered, or withdrawn from warehouse, for consumption on or after the publication date of the final results of this administrative review, as provided for by section 751(a)(1) of the Act: (1) The cash deposit rate for MAN Roland will be the rate established above in the ''Final Results of the Review'' section; (2) for previously investigated companies not listed above, the cash deposit rate will continue to be the company-specific rate published for the most recent period; (3) if the exporter is not a firm covered in this review, or the original investigation, but the manufacturer is, the cash deposit rate will be the rate established for the most recent period for the manufacturer of the merchandise; and (4) the cash deposit rate for all other manufacturers or exporters of this merchandise will continue to be 30.72 percent, the all others rate made effective by the less-than-fair-value investigation. These requirements, when imposed, shall remain in effect until publication of the final results of the next administrative review.

This notice serves as the only reminder to parties subject to administrative protective order (APO) of their responsibility concerning the disposition of proprietary information disclosed under APO in accordance with 19 CFR 351.305(a)(3). Timely written notification of return/destruction of APO materials or conversion to judicial protective order is hereby requested. Failure to comply with the regulation and the terms of an APO is a sanctionable violation.

This administrative review and notice are issued and published in accordance with sections 751(a)(1) and 777(i)(1) of the Act and 19 CFR 351.221.

Dated: January 9, 2002.

Faryar Shirzad,

Assistant Secretary for Import Administration.

[FR Doc. 02–1131 Filed 1–15–02; 8:45 am]

BILLING CODE 3510–DS–P

DEPARTMENT OF COMMERCE

International Trade Administration

[A–580–834]

Notice of Amended Final Antidumping Duty Administrative Review: Stainless Steel Sheet and Strip in Coils From the Republic of Korea

AGENCY: Import Administration, International Trade Administration, Department of Commerce.

ACTION: Notice of amended final results of antidumping duty administrative review of stainless steel sheet and strip in coils from the Republic of Korea.

EFFECTIVE DATE: January 16, 2002.

FOR FURTHER INFORMATION CONTACT: Brandon Farlander and Laurel LaCivita, AD/CVD Enforcement Group III, Office 9, Import Administration, International Trade Administration, U.S. Department of Commerce, 14th Street and Constitution Avenue, NW., Washington, DC 20230; telephone: (202) 482–0182 and (202) 482–4243, respectively.

The Applicable Statute and Regulations

Unless otherwise indicated, all citations to the Tariff Act of 1930, as amended (''the Act''), are references to the provisions effective January 1, 1995, the effective date of the amendments made to the Act by the Uruguay Round Agreements Act (''URAA''). In addition, unless otherwise indicated, all citations to the Department's regulations are to the regulations codified at 19 CFR part 351 (2001).

Scope of the Review

For purposes of this administrative review, the products covered are certain stainless steel sheet and strip in coils. Stainless steel is an alloy steel containing, by weight, 1.2 percent or less of carbon and 10.5 percent or more of chromium, with or without other elements. The subject sheet and strip is a flat-rolled product in coils that is greater than 9.5 mm in width and less than 4.75 mm in thickness, and that is annealed or otherwise heat treated and pickled or otherwise descaled. The subject sheet and strip may also be further processed (*e.g.,* cold-rolled, polished, aluminized, coated, *etc.*) provided that it maintains the specific dimensions of sheet and strip following such processing.

The merchandise subject to this review is classified in the Harmonized Tariff Schedule of the United States (HTS) at subheadings: 7219.13.0031, 7219.13.0051, 7219.13.0071, 7219.1300.81,[1] 7219.14.0030, 7219.14.0065, 7219.14.0090, 7219.32.0005, 7219.32.0020, 7219.32.0025, 7219.32.0035, 7219.32.0036, 7219.32.0038, 7219.32.0042, 7219.32.0044, 7219.33.0005, 7219.33.0020, 7219.33.0025, 7219.33.0035, 7219.33.0036, 7219.33.0038, 7219.33.0042, 7219.33.0044, 7219.34.0005, 7219.34.0020, 7219.34.0025, 7219.34.0030, 7219.34.0035, 7219.35.0005, 7219.35.0015, 7219.35.0030, 7219.35.0035, 7219.90.0010, 7219.90.0020, 7219.90.0025, 7219.90.0060, 7219.90.0080, 7220.12.1000, 7220.12.5000, 7220.20.1010, 7220.20.1015, 7220.20.1060, 7220.20.1080, 7220.20.6005, 7220.20.6010, 7220.20.6015, 7220.20.6060, 7220.20.6080, 7220.20.7005, 7220.20.7010, 7220.20.7015, 7220.20.7060, 7220.20.7080, 7220.20.8000, 7220.20.9030, 7220.20.9060, 7220.90.0010, 7220.90.0015, 7220.90.0060, and 7220.90.0080. Although the HTS subheadings are provided for convenience and Customs purposes, the Department's written description of the merchandise under review is dispositive.

Excluded from the scope of this review are the following: (1) Sheet and strip that is not annealed or otherwise heat treated and pickled or otherwise descaled, (2) sheet and strip that is cut to length, (3) plate (i.e., flat-rolled stainless steel products of a thickness of 4.75 mm or more), (4) flat wire (i.e., cold-rolled sections, with a prepared edge, rectangular in shape, of a width of not more than 9.5 mm), and (5) razor blade steel. Razor blade steel is a flat-rolled product of stainless steel, not further worked than cold-rolled (cold-

[1] Due to changes to the HTS numbers in 2001, 7219.13.0030, 7219.13.0050, 7219.13.0070, and 7219.13.0080 are now 7219.13.0031, 7219.13.0051, 7219.13.0071, and 7219.13.0081, respectively.

reduced), in coils, of a width of not more than 23 mm and a thickness of 0.266 mm or less, containing, by weight, 12.5 to 14.5 percent chromium, and certified at the time of entry to be used in the manufacture of razor blades. *See* Chapter 72 of the HTS, ''Additional U.S. Note'' 1(d).

In response to comments by interested parties, the Department has determined that certain specialty stainless steel products are also excluded from the scope of this review. These excluded products are described below.

Flapper valve steel is defined as stainless steel strip in coils containing, by weight, between 0.37 and 0.43 percent carbon, between 1.15 and 1.35 percent molybdenum, and between 0.20 and 0.80 percent manganese. This steel also contains, by weight, phosphorus of 0.025 percent or less, silicon of between 0.20 and 0.50 percent, and sulfur of 0.020 percent or less. The product is manufactured by means of vacuum arc remelting, with inclusion controls for sulphide of no more than 0.04 percent and for oxide of no more than 0.05 percent. Flapper valve steel has a tensile strength of between 210 and 300 ksi, yield strength of between 170 and 270 ksi, plus or minus 8 ksi, and a hardness (Hv) of between 460 and 590. Flapper valve steel is most commonly used to produce specialty flapper valves in compressors.

Also excluded is a product referred to as suspension foil, a specialty steel product used in the manufacture of suspension assemblies for computer disk drives. Suspension foil is described as 302/304 grade or 202 grade stainless steel of a thickness between 14 and 127 microns, with a thickness tolerance of plus-or-minus 2.01 microns, and surface glossiness of 200 to 700 percent Gs. Suspension foil must be supplied in coil widths of not more than 407 mm, and with a mass of 225 kg or less. Roll marks may only be visible on one side, with no scratches of measurable depth. The material must exhibit residual stresses of 2 mm maximum deflection, and flatness of 1.6 mm over 685 mm length.

Certain stainless steel foil for automotive catalytic converters is also excluded from the scope of this review. This stainless steel strip in coils is a specialty foil with a thickness of between 20 and 110 microns used to produce a metallic substrate with a honeycomb structure for use in automotive catalytic converters. The steel contains, by weight, carbon of no more than 0.030 percent, silicon of no more than 1.0 percent, manganese of no more than 1.0 percent, chromium of between 19 and 22 percent, aluminum of no less than 5.0 percent, phosphorus of no more than 0.045 percent, sulfur of no more than 0.03 percent, lanthanum of less than 0.002 or greater than 0.05 percent, and total rare earth elements of more than 0.06 percent, with the balance iron.

Permanent magnet iron-chromium-cobalt alloy stainless strip is also excluded from the scope of this review. This ductile stainless steel strip contains, by weight, 26 to 30 percent chromium, and 7 to 10 percent cobalt, with the remainder of iron, in widths 228.6 mm or less, and a thickness between 0.127 and 1.270 mm. It exhibits magnetic remanence between 9,000 and 12,000 gauss, and a coercivity of between 50 and 300 oersteds. This product is most commonly used in electronic sensors and is currently available under proprietary trade names such as ''Arnokrome III.''[2]

Certain electrical resistance alloy steel is also excluded from the scope of this review. This product is defined as a non-magnetic stainless steel manufactured to American Society of Testing and Materials (''ASTM'') specification B344 and containing, by weight, 36 percent nickel, 18 percent chromium, and 46 percent iron, and is most notable for its resistance to high temperature corrosion. It has a melting point of 1390 degrees Celsius and displays a creep rupture limit of 4 kilograms per square millimeter at 1000 degrees Celsius. This steel is most commonly used in the production of heating ribbons for circuit breakers and industrial furnaces, and in rheostats for railway locomotives. The product is currently available under proprietary trade names such as ''Gilphy 36.''[3]

Certain martensitic precipitation-hardenable stainless steel is also excluded from the scope of this review. This high-strength, ductile stainless steel product is designated under the Unified Numbering System (''UNS'') as S45500-grade steel, and contains, by weight, 11 to 13 percent chromium, and 7 to 10 percent nickel. Carbon, manganese, silicon and molybdenum each comprise, by weight, 0.05 percent or less, with phosphorus and sulfur each comprising, by weight, 0.03 percent or less. This steel has copper, niobium, and titanium added to achieve aging, and will exhibit yield strengths as high as 1700 Mpa and ultimate tensile strengths as high as 1750 Mpa after aging, with elongation percentages of 3 percent or less in 50 mm. It is generally provided in thicknesses between 0.635 and 0.787 mm, and in widths of 25.4 mm. This product is most commonly used in the manufacture of television tubes and is currently available under proprietary trade names such as ''Durphynox 17.''[4]

Finally, three specialty stainless steels typically used in certain industrial blades and surgical and medical instruments are also excluded from the scope of this review. These include stainless steel strip in coils used in the production of textile cutting tools (e.g., carpet knives).[5] This steel is similar to AISI grade 420 but containing, by weight, 0.5 to 0.7 percent of molybdenum. The steel also contains, by weight, carbon of between 1.0 and 1.1 percent, sulfur of 0.020 percent or less, and includes between 0.20 and 0.30 percent copper and between 0.20 and 0.50 percent cobalt. This steel is sold under proprietary names such as ''GIN4 Mo.'' The second excluded stainless steel strip in coils is similar to AISI 420–J2 and contains, by weight, carbon of between 0.62 and 0.70 percent, silicon of between 0.20 and 0.50 percent, manganese of between 0.45 and 0.80 percent, phosphorus of no more than 0.025 percent and sulfur of no more than 0.020 percent. This steel has a carbide density on average of 100 carbide particles per 100 square microns. An example of this product is ''GIN5'' steel. The third specialty steel has a chemical composition similar to AISI 420 F, with carbon of between 0.37 and 0.43 percent, molybdenum of between 1.15 and 1.35 percent, but lower manganese of between 0.20 and 0.80 percent, phosphorus of no more than 0.025 percent, silicon of between 0.20 and 0.50 percent, and sulfur of no more than 0.020 percent. This product is supplied with a hardness of more than Hv 500 guaranteed after customer processing, and is supplied as, for example, ''GIN6''.[6]

Amendment of Final Results

On December 6, 2001, the Department of Commerce (''the Department'') issued its final results and partial rescission for stainless steel sheet and strip in coils from the Republic of Korea for the January 4, 1999 through June 30, 2000 period of review. *See Stainless Steel Sheet and Strip From the Republic of Korea; Final Results and Partial Rescission of Antidumping Duty Administrative Review (''Final Results'')*, 66 FR 64950 (December 17, 2001).

[2] ''Arnokrome III'' is a trademark of the Arnold Engineering Company.

[3] ''Gilphy 36'' is a trademark of Imphy, S.A.

[4] ''Durphynox 17'' is a trademark of Imphy, S.A.

[5] This list of uses is illustrative and provided for descriptive purposes only.

[6] ''GIN4 Mo,'' ''GIN5'' and ''GIN6'' are the proprietary grades of Hitachi Metals America, Ltd.

On December 13, 2001, respondent Sammi Steel Co., Ltd. (''Sammi'') timely filed an allegation that the Department made a ministerial error in the final results. Petitioners did not submit any comments in reply to this ministerial error allegation.

The Department is revising the all others rate applied to Sammi in the final results in this administrative review of stainless steel sheet and strip in coils from the Republic of Korea. Because Sammi did not participate in the original investigation and because Sammi had no shipments during the period of review, its cash deposit rate is the all others rate assigned to this case.

Sammi's Allegation of a Ministerial Error by the Department

Sammi contends that the Department, in its *Final Results*, erroneously applied the all others rate determined in the original investigation to Sammi, a no shipper during the period of review. Sammi notes that the Department amended its final determination on August 28, 2001, revising the all others rate from 12.12 percent to 2.49 percent. *See Notice of Amendment of Final Determinations of Sales at Less Than Fair Value: Stainless Steel Plate in Coils From the Republic of Korea; and Stainless Steel Sheet and Strip in Coils From the Republic of Korea (''Amended Final Determination'')*, 66 FR 45279 (August 28, 2001). Sammi contends that the Department should amend its *Final Results* to apply the all others rate of 2.49 percent determined in the *Amended Final Determination* to Sammi.

Sammi notes that the Department's regulations defines a ministerial error as an ''error in addition, subtraction, or other arithmetic function, clerical error resulting from inaccurate copying, duplication, or the like, and any other similar type of unintentional error which the Secretary considers ministerial,'' citing 19 CFR 351.224(f). Therefore, Sammi requests that the Department correct this ministerial error by revising Sammi's cash deposit rate and the all others rate to 2.49 percent in this administrative review, in accordance with the *Amended Final Determination.*

Department's Position: We agree with Sammi. Our *Final Results* erroneously stated that the ''all others rate'' applicable to exporters or manufacturers who have not been covered in this or any previous review conducted by the Department is 12.12 percent rather than the 2.49 percent established in the *Amended Final Determination.* The correct all others rate applicable to Sammi is the all others rate established in the *Amended Final Determination.* Since Sammi did not participate in the original investigation and because Sammi had no shipments in the current period of review, its cash deposit rate is the all others rate determined in the *Amended Final Determination.*

Therefore, we are amending the final results of the antidumping duty administrative review of stainless steel sheet and strip in coils from the Republic of Korea to reflect the correction of the above-cited ministerial error.

We are issuing and publishing this determination and notice in accordance with sections 751(a)(1) and 777(i) of the Act.

Dated: January 9, 2002.

Faryar Shirzad,

Assistant Secretary for Import Administration.

[FR Doc. 02–1128 Filed 1–15–02; 8:45 am]

BILLING CODE 3510–DS–P

DEPARTMENT OF COMMERCE

International Trade Administration

Application for Duty-Free Entry of Scientific Instrument

Pursuant to section 6(c) of the Educational, Scientific and Cultural Materials Importation Act of 1966 (Pub. L. 89–651; 80 Stat. 897; 15 CFR part 301), we invite comments on the question of whether an instrument of equivalent scientific value, for the purposes for which the instrument shown below is intended to be used, is being manufactured in the United States.

Comments must comply with 15 CFR 301.5(a)(3) and (4) of the regulations and be filed within 20 days with the Statutory Import Programs Staff, U.S. Department of Commerce, Washington, DC 20230. Applications may be examined between 8:30 A.M. and 5 P.M. in Suite 4100W, U.S. Department of Commerce, Franklin Court Building, 1099 14th Street, NW., Washington, DC.

Docket Number: 01–022. *Applicant:* The Scripps Research Institute, 10550 North Torrey Pines Road, La Jolla, CA 92037. *Instrument:* Electron Microscope, Model Tecnai F20T. *Manufacturer:* FEI Company, The Netherlands. *Intended Use:* The instrument is intended to be used in the study of the following:

(1) Cowpea Mosaic Virus isolated from infected plants.

(2) NwV Mosaic Virus isolated from insect cells.

(3) Muscle Proteins isolated from vertebrate striated and smooth muscle fibers.

(4) Microtubules and associated proteins isolated from bovine brain or from bacterial expression systems.

(5) CHIP28 Water Channels isolated from human erythrocytes.

(6) Aqua Porins isolated from plants.

(7) Acetylcholine Receptors isolated from the electric organ of Torpedo californica and T.marmorata.

(8) Gap Junctions isolated from rat hearts and liver as well as from tissue culture expression systems.

(9) Rotavirus and Reovirus isolated from infected tissue culture cells.

(10) Transcription Complexes from bacterial and yeast expression systems.

(11) A number of enzyme complexes: fatty acid synthane, gylceraldehyde-3-phosphate dehydrogenase, hemocyanin, GroEL, isolated from various tissues of animal and plant origin.

(12) Tobacco Mosaic Virus isolated from infected plants.

The goals of the investigations are in general to understand the structural basis for how the subcellular organelles function and to elucidate the role that they play in the life of the cell.

Application accepted by Commissioner of Customs: October 14, 2001.

Gerald A. Zerdy,

Program Manager, Statutory Import Programs Staff.

[FR Doc. 02–1132 Filed 1–15–02; 8:45 am]

BILLING CODE 3510–DS–P

DEPARTMENT OF COMMERCE

National Oceanic and Atmospheric Administration

[I.D. 011102G]

Proposed Information Collection; Comment Request; Economic Performance Data for the West Coast (California-Alaska) Commercial Fisheries

AGENCY: National Oceanic and Atmospheric Administration (NOAA).

ACTION: Notice.

SUMMARY: The Department of Commerce, as part of its continuing effort to reduce paperwork and respondent burden, invites the general public and other Federal agencies to take this opportunity to comment on proposed and/or continuing information collections, as required by the Paperwork Reduction Act of 1995, Pub. L. 104–13 (44 U.S.C. 3506 (c)(2)(A)).

DATES: Written comments must be submitted on or before March 18, 2002.

ADDRESSES: Direct all written comments to Madeleine Clayton, Departmental

Paperwork Clearance Officer, Department of Commerce, Room 6086, 14th and Constitution Avenue NW, Washington DC 20230 (or via Internet at MClayton@doc.gov).

FOR FURTHER INFORMATION CONTACT: Requests for additional information or copies of the information collection instrument(s) and instructions should be directed to Dave Colpo, Pacific States Marine Fisheries Commission, 7600 Sand Point Way N.E., Seattle, WA 98115, phone 206–526–4251, dave—colpo@psmfc.org; Steve Freese, Alaska Fisheries Science Center, 7600 Sand Point Way N.E., Seattle, WA 98115, phone 206–526–6113, Steve.Freese@noaa.gov; or Joe Terry, Alaska Fisheries Science Center, 7600 Sand Point Way N.E., Seattle, WA 98115, phone 206–526–4253, Joe.Terry@noaa.gov.

SUPPLEMENTARY INFORMATION:

I. Abstract

Economic performance data for selected West Coast (California-Alaska) commercial fisheries will be collected for each of the following groups of operations: (1) processors, including on-shore plants, mothership vessels and at-sea catcher/processor vessels; (2) catcher vessels; and (3) charter vessels. Companies associated with these groups will be surveyed for expenditure, earnings and employment data. In general, questions will be asked concerning ex-vessel and wholesale prices and revenue, variable and fixed costs, expenditures, dependence on the fisheries, and fishery employment. The data collection efforts will be coordinated to reduce the additional burden for those who participate in multiple fisheries. Each year the principal focus of this data collection program will be on a different set of fisheries or on a different set of participants in these fisheries. The data will be used for the following three purposes: (1) to monitor the economic performance of these fisheries and various components of these fisheries through primary processing; (2) to analyze the economic performance effects of current management measures; and (3) to analyze the economic performance effects of alternative management measures. The measures of economic performance to be supported by this data collection program include the following: (1) contribution to net National benefit; (2) contribution to income of groups of participants in the fisheries (i.e., fishermen, vessel owners, processing plant employees, and processing plant owners) (3) employment; (4) regional economic impacts (income and employment); and (5) factor utilization rates. As required by law, the confidentiality of the data will be protected.

In each year, the data collection effort will focus on different components of the West Coast fisheries and more limited data will be collected for the previously surveyed components of these fisheries. The latter will be done to update the models that will be used to track economic performance and to evaluate the economic effects of alternative management actions. This cycle of data collection will result in economic performance data being available and updated for all the components of the West Coast fisheries identified above.

The large scale of most of the processing operations involved in these fisheries and of many of the harvesting operations and the concentration of ownership in many of these fisheries, particularly off Alaska, means that improved economic data for the management of these fisheries is a high priority for the individuals who will provide data for these fisheries. This is demonstrated by the fact that associations representing many of the Alaskan participants in these fisheries support this data collection effort and have volunteered to assist in verifying the data.

II. Method of Collection

Data will be collected from a sample of the owners and operators of catcher vessels, catcher/processors, on-shore processing plants, motherships and charter vessels that participate in these fisheries. The data are expected to be collected principally by NMFS and Pacific States Marine Fisheries Commission economists. Questionnaires will be mailed to the selected members of each of the different survey groups and in many cases those individuals will be interviewed to ensure the clarity of their responses. To the extent practicable, the data collected will consist of data that the respondents maintain for their own business purposes. Therefore, the collection burden will consist principally of transcribing data from their internal records to the survey instrument and participating in personal interviews. In addition, current data reporting requirements will be evaluated to determine if they can be modified to provide improved economic data at a lower cost to respondents and the Agency. Similarly, it will be determined if some of these data can be collected more effectively and efficiently from the firms that provide bookkeeping and accounting services to participants in West Cost commercial marine fisheries. This data collection method would be used only after obtaining permission to do so from participants in the fisheries.

The surveys described in this Federal Register Notice will be voluntary. The North Pacific Fishery Management Council is considering the development of additional mandatory reporting requirements for economic data. If such requirements are implemented, the data collected with voluntary surveys in Alaska would be decreased.

III. Data

OMB Number: 0648–0369.

Form Number: None.

Type of Review: Regular submission.

Affected Public: Business and other for-profit organizations.

Estimated Number of Respondents: 2,278.

Estimated Time Per Response: 2 hours for a response from a catcher vessel; 1 hour for a response from a charter boat operator; and 8 hours for a response from a processor.

Estimated Total Annual Burden Hours: 7,074.

Estimated Total Annual Cost to Public: $0.

IV. Request for Comments

Comments are invited on: (a) whether the proposed collection of information is necessary for the proper performance of the functions of the agency, including whether the information shall have practical utility; (b) the accuracy of the agency's estimate of the burden (including hours and cost) of the proposed collection of information; (c) ways to enhance the quality, utility, and clarity of the information to be collected; and (d) ways to minimize the burden of the collection of information on respondents, including through the use of automated collection techniques or other forms of information technology.

Comments submitted in response to this notice will be summarized and/or included in the request for OMB approval of this information collection; they also will become a matter of public record.

Dated: January 10, 2002.

Madeleine Clayton,

Departmental Paperwork Clearance Officer, Office of the Chief Information Officer.

[FR Doc. 02–1143 Filed 1–15–02; 8:45 am]

BILLING CODE 3510–22–S

DEPARTMENT OF COMMERCE

National Oceanic and Atmospheric Administration

[I.D. 011102F]

North Pacific Fishery Management Council; Public Meeting

AGENCY: National Marine Fisheries Service (NMFS), National Oceanic and Atmospheric Administration (NOAA), Commerce.

ACTION: Notice of Committee Meeting.

SUMMARY: The North Pacific Fishery Management Council's (Council) Essential Fish Habitat (EFH) Committee will meet in Juneau, AK.

DATES: The meeting will be held on January 29–30, 2002.

ADDRESSES: The meeting will be held at the Alaska Fisheries Science Center, 7600 Sand Point Way NE, Seattle, WA.

Council address: North Pacific Fishery Management Council, 605 W. 4th Ave., Suite 306, Anchorage, AK 99501–2252.

FOR FURTHER INFORMATION CONTACT: Cathy Coon, North Pacific Fishery Management Council; 907–271–2809.

SUPPLEMENTARY INFORMATION: The meeting will begin at 10:30 a.m. on Tuesday, January 29, continue through Wednesday, January 30. The committee's agenda includes the following issues:

1. Review of alternatives for EFH and habitat areas of particular concern (HAPC).
2. Discussion of HAPC site designation/proposal process.
3. Develop final recommendation on EFH and HAPC alternatives.
4. Review draft Groundfish Programmatic Groundfish Supplementary Environmental Impact Statement schedule, table of contents, and purpose and need statements.
5. Presentation and discussion of white paper on mitigation alternatives and gear impact analysis.
6. Discussion of format for NMFS workshop on gear effects.

Although non-emergency issues not contained in this agenda may come before this group for discussion, those issues may not be the subject of formal action during this meeting. Action will be restricted to those issues specifically identified in this notice and any issues arising after publication of this notice that require emergency action under section 305(c) of the Magnuson-Stevens Fishery Conservation and Management Act, provided the public has been notified of the Council's intent to take final action to address the emergency.

Special Accommodations

These meetings are physically accessible to people with disabilities. Requests for sign language interpretation or other auxiliary aids should be directed to Helen Allen, 907–271–2809, at least 5 working days prior to the meeting date.

Dated: January 11, 2002.

Richard W. Surdi,

Acting Director, Office of Sustainable Fisheries, National Marine Fisheries Service.

[FR Doc. 02–1134 Filed 1–15–02; 8:45 am]

BILLING CODE 3510–22–S

DEPARTMENT OF COMMERCE

National Oceanic and Atmospheric Administration

[I.D. 010902B]

Marine Mammals; File No. 775–1600–01

AGENCY: National Marine Fisheries Service (NMFS), National Oceanic and Atmospheric Administration (NOAA), Commerce.

ACTION: Receipt of application for amendment.

SUMMARY: Notice is hereby given that Michael Sissenwine, Northeast Fisheries Science Center, National Marine Fisheries Service, Room 312, 166 Water Street, Woods Hole, MA 02543, has requested an amendment to scientific research Permit No. 775–1600–01.

DATES: Written or telefaxed comments must be received on or before February 15, 2002.

ADDRESSES: The amendment request and related documents are available for review upon written request or by appointment in the following office(s):

Permits, Conservation and Education Division, Office of Protected Resources, NMFS, 1315 East-West Highway, Room 13705, Silver Spring, MD 20910; phone (301) 713–2289; fax (301) 713–0376; and

Northeast Region, NMFS, One Blackburn Drive, Gloucester, MA 01930–2298; phone (508) 281–9250; fax (508) 281–9371.

Written comments or requests for a public hearing on this request should be submitted to the Chief, Permits, Conservation and Education Division, F/PR1, Office of Protected Resources, NMFS, 1315 East-West Highway, Room 13705, Silver Spring, MD 20910. Those individuals requesting a hearing should set forth the specific reasons why a hearing on this particular amendment request would be appropriate.

Comments may also be submitted by facsimile at (301) 713–0376, provided the facsimile is confirmed by hard copy submitted by mail and postmarked no later than the closing date of the comment period. Please note that comments will not be accepted by e-mail or other electronic media.

FOR FURTHER INFORMATION CONTACT: Amy Sloan or Ruth Johnson, (301) 713–2289.

SUPPLEMENTARY INFORMATION: The subject amendment to Permit No. 775–1600–01, issued on March 6, 2001 (66 FR 32793) is requested under the authority of the Marine Mammal Protection Act of 1972, as amended (16 U.S.C. 1361 *et seq.*), and the Regulations Governing the Taking and Importing of Marine Mammals (50 CFR part 216).

Permit No. 775–1600–01 authorizes the permit holder to conduct research on 28 species of cetacean in the North Atlantic Ocean, and on harbor seals (*Phoca vitulina*), gray seals (*Halichoerus grypus*), harp seals (*Phoca groenlandica*), and hooded seals (*Cystophora cristata*) in coastal Maine, Massachusetts, New Hampshire, and Delaware. The principal purpose of the research, for all species, relates to stock assessment, an activity for which NMFS has primary responsibility under the MMPA. Types of take for cetaceans include potential harassment by shipboard and aerial approach, photo-ID, biopsy sampling, acoustic sampling, and tagging. Types of take for the 4 species of pinnipeds include potential harassment by shipboard and aerial approach; type of takes for harbor and gray seals include photo-ID and incidental harassment during scat and carcass collections; harbor seals may also be captured, biopsy and blood sampled, VHF tagged, ''hat tagged'', and flipper tagged. The Permit also authorizes import and export of marine mammal parts (including soft and hard tissue, blood, extracted DNA, and whole dead animals or parts thereof) to and from any country.

The permit holder requests authorization to capture, examine, measure, flipper tag (retain tissue from tagging), apply a ''seal hat'', and photograph up to 200 gray seal pups; blood sample 50 of the 200 pups captured; and VHF tag 30 of the 200 pups captured. These activities would occur in coastal Maine and Massachusetts for purposes of stock assessment.

In compliance with the National Environmental Policy Act of 1969 (42 U.S.C. 4321 *et seq.*), an initial determination has been made that the activity proposed is categorically excluded from the requirement to prepare an environmental assessment or environmental impact statement.

Concurrent with the publication of this notice in the **Federal Register**, NMFS is forwarding copies of this application to the Marine Mammal Commission and its Committee of Scientific Advisors.

Dated: January 9, 2002.

Ann D. Terbush,

Chief, Permits, Conservation and Education Division, Office of Protected Resources, National Marine Fisheries Service.

[FR Doc. 02–1135 Filed 1–15–02; 8:45 am]

BILLING CODE 3510–22–S

CONSUMER PRODUCT SAFETY COMMISSION

Sunshine Act Meeting

AGENCY: Consumer Product Safety Commission, Washington, DC 20207.

TIME AND DATE: Thursday, January 24, 2002, 2 p.m.

LOCATION: Room 410, East West Towers, 4330 East West Highway, Bethesda, Maryland.

STATUS: Closed to the Public—Pursuant to 5 U.S.C. 552b(f)(1) and 16 CFR 1013.4(b)(3), (7), (9) and (10) and submitted to the **Federal Register** pursuant to 5 U.S.C. 552b(e)(3).

MATTER TO BE CONSIDERED:

Compliance Status Report

The staff will brief the Commission on the status of various compliance matters.

For a recorded message containing the latest agenda information, call (301) 504–0709.

CONTACT PERSON FOR ADDITIONAL INFORMATION: Todd A. Stevenson, Office of the Secretary, 4330 East West Highway, Bethesda, MD 20207, (301) 504–0800.

Dated: January 14, 2002.

Todd A. Stevenson,

Secretary.

[FR Doc. 02–1277 Filed 1–14–02; 2:15 pm]

BILLING CODE 6355–01–M

DEPARTMENT OF DEFENSE

Office of the Secretary

Defense Science Board

AGENCY: Department of Defense.

ACTION: Notice of advisory committee meeting.

SUMMARY: The Defense Science Board (DSB) Task Force on Missile Defense will meet in closed session on January 23, 2002, at the Institute for Defense Analyses, 1801 N. Beauregard Street, Alexandria, VA. This Task Force will develop recommendations that help guide the ballistic missile defense system (BMDS) toward a fully integrated, layered defense capable of defeating ballistic missiles in any phase of their flight.

The mission of the Defense Science Board is to advise the Secretary of Defense and the Under Secretary of Defense for Acquisition, Technology & Logistics on scientific and technical matters as they affect the perceived needs of the Department of Defense. At this meeting, the Defense Science Board Task Force will examine five areas: counter-countermeasures; boost phase technology; battle management and command, control, and communications; international cooperation; and the evolution of ballistic missile threats.

In accordance with section 10(d) of the Federal Advisory Committee Act, Pub. L. 92–463, as amended (5 U.S.C. App. II), it has been determined that this Defense Science Board Task Force meeting concerns matters listed in 5 U.S.C. 552b(c)(1) and that, accordingly, the meeting will be closed to the public.

Due to critical mission requirements and the short timeframe to accomplish this review, there is insufficient time to provide timely notice required by section 10(a)(2) of the Federal Advisory Committee Act and Subsection 101–6.1015(b) of the GSA Final Rule on Federal Advisory Committee Management, 41 CFR part 101–6, which further requires publication at least 15 calendar days prior to the first meeting of the Task Force on Missile Defense.

Dated: January 9, 2002.

Patricia L. Toppings,

Alternate OSD Federal Register Liaison Officer, Department of Defense.

[FR Doc. 02–1051 Filed 1–15–02; 8:45 am]

BILLING CODE 5001–08–M

DEPARTMENT OF DEFENSE

Department of the Army; Corps of Engineers

Availability of the Record of Decision on Arthur Kill Channel—Howland Hook Marine Terminal, New York and New Jersey

AGENCY: U.S. Army Corps of Engineers, DoD.

ACTION: Notice of availability.

SUMMARY: The Record of Decision (ROD) on the Arthur Kill Channel—Howland Hook Marine Terminal, New York and New Jersey, was signed by Robert H. Griffin, Brigadier General, U.S. Army, Director of Civil Works and transmitted to the New York District of the U.S. Army Corps of Engineers by memo dated 4 September, 2001. The ROD closes the administrative record for the Final Supplemental Environmental Impact Statement on the above referenced project.

DATES: There is no closing date for the availability of the ROD.

ADDRESSES: The ROD may be obtained from the Army Corps of Engineers Planning Division, 26 Federal Plaza, New York, NY 10278–0090.

FOR FURTHER INFORMATION CONTACT: Ms. Therese Fretwell, Environmental Technical Coordinator, CENAN–PL–EA, Corps of Engineers, New York District, 26 Plaza, NY, NY 10278–0090, Tel. 212–264–5736.

Luz D. Ortiz,

Army Federal Register Liaison Officer.

[FR Doc. 02–1148 Filed 1–15–02; 8:45 am]

BILLING CODE 3710–06–M

DEPARTMENT OF DEFENSE

Department of the Army, Corps of Engineers

Intent To Prepare a Draft Environmental Impact Statement (DEIS) for a Proposed Hurricane and Storm Damage Reduction Project at the Village of Asharoken, Suffolk County, NY

AGENCY: U.S. Army Corps of Engineers, DoD.

NOTICE: Notice of intent.

SUMMARY: U.S. Army Corps of Engineers (USACE), New York District, announces its intent to prepare a DEIS pursuant to the National Environmental Policy Act (NEPA), in accordance with the Council on Environmental Quality (CEQ) Regulations for Implementing the Procedural Provisions of NEPA and the Department of the Army, USACE Procedures for Implementing NEPA, to assess the environmental impacts of a proposed hurricane and storm damage reduction project for the north shore of Long Island in the Village of Asharoken, NY. In accordance with USACE policies, the USACE will conduct a feasibility study to evaluate a range of structural and non-structural project alternatives. The following improvement measures would be considered: beach fill only, beach fill in combination with structures such as floodwalls, buried rubble-mound seawalls, dunes, stone revetments, interior drainage features, modifications to existing shore structures, sand by-passing; and non-structural measures

such as relocations, buyouts, and flood proofing of threatened properties. Offshore sand borrow areas, as well as upland areas, will be investigated as potential sources of beach fill material.

FOR FURTHER INFORMATION CONTACT: Questions about the proposed action and the DEIS can be answered by: Ms. Megan B. Grubb, (212) 264–5759, U.S. Army Engineer District, New York Planning Division, ATTN: CENA–PL–EA, 26 Federal Plaza, New York, NY 10278–0090.

SUPPLEMENTARY INFORMATION:

Project Location: This notice announces the initiation of the feasibility phase study for beach erosion control, storm damage reduction and related purposes along the north shore of Long Island at Asharoken, NY. The study area extends from Long Island Sound on the north, Duck Island Harbor and Northport Bay on the south, the North Power Station on the East and Eatons Neck on the west.

Project Authorization and History: The North Shore of Long Island, village of Asharoken, New York, Hurricane and Storm Damage Reduction Study was authorized by a resolution of the U.S. House of Representatives Committee on Public Works and Transportation, adopted May 13, 1993. In response to the study resolution and a State request, following the devastating coastal storm of December 1992, the USACE performed a Reconnaissance Study and issued a Reconnaissance Report in September 1995 that demonstrated a potential Federal interest and the need for a more detailed feasibility study.

Project Need; The Long Island northern shoreline has historically experienced coastal erosion and related storm damage, most recently from the two storms of September 1996 and October 1996, and from previous storms including the Christmas Eve 1994 storm, and March 1993 Blizzard of the Century, the December 1992 northeaster, Hurricane Danielle of September 1992 and Halloween Storm of 1991. These Storms caused evacuations in several north shore communities as well as damage from flooding and loss of structures from erosion. The December 1992 storm alone inundated hundreds of residential and business properties and caused damages estimated at $12,000,000. The loss of beachfront in some areas now leaves the site increasingly vulnerable to severe damages even from moderate storms. The length of Asharoken Beach is approximately 2.5 miles, while the width varies from 100 feet at the northwestern end to 1,000 feet at the southeastern end. Asharoken Avenue, which generally runs parallel to the Long Island Sound shoreline, provides only vehicular access to the Village and the Eatons Neck community. While the most critically threatened location of Asharoken Avenue is protected by a small temporary shore protection project, the feasibility study will consider long-term protection throughout the Village.

DEIS Scope: The intended DEIS will evaluate the potential environmental and cultural impacts associated with the proposed hurricane and storm damage reduction alternatives for the Village of Asharoken, NY.

Public Involvement: The USACE intends to schedule an interagency meeting and public scoping meeting in the spring/summer 2002 to discuss the scope of the DEIS and data gaps. The public scoping meeting place, date, and time will be advertised in advance in local newspapers, and meeting announcement letters will be sent to interested parties. A scoping document will be made available at least one month before scheduled public scoping meeting date at the following locations:

(1) Northport Public Library, 151 Laurel Avenue, Northport, NY 11768.

(2) East Northport Public Library, 185 Larkfield Road, East Northport, NY 11731.

(3) Huntington Main Library, 338 Main Street, Huntington, NY 11743.

The public will have an opportunity to provide written and oral comments at the public scoping meeting. Written comments may also be submitted via mail and should be directed to Ms. Megan B. Grubb at the address listed above under **FOR FURTHER INFORMATION CONTACT** heading. The USACE plans to issue the DEIS in Spring 2003. The USACE will announce availability of the draft in the **Federal Register** and other media, and will provide the public, organizations, and agencies with the opportunity to submit comments, which will be addressed in the final Environmental Impact Statement.

Luz D. Ortiz,

Army Federal Register Liaison Officer.

[FR Doc. 02–1147 Filed 1–15–02; 8:45 am]

BILLING CODE 3710–06–M

DEPARTMENT OF DEFENSE

Department of the Army, Corps of Engineers

Intent To Prepare a Draft Environmental Impact Statement (DEIS) for a Proposed Hurricane and Storm Damage Reduction Project at the Village of Bayville, Nassau County, New York

AGENCY: U.S. Army Corps of Engineers, DoD.

ACTION: Notice of intent.

SUMMARY: The U.S. Army Corps of Engineers (USACE), New York District, announces its intent to prepare a DEIS pursuant to the National Environment Policy Act (NEPA), in accordance with the Council on Environmental Quality (CEO) Regulations for Implementing the Procedural Provisions of NEPA and the Department of the Army, USACE Procedures for Implementing NEPA, to assess the environmental impacts of a proposed hurricane and storm damage reduction project for the north shore of Long Island in the Village of Bayville, NY. In accordance with USACE policies, the USACE will conduct a feasibility study to evaluate a range of structural and non-structural project alternatives. The following improvement measures would be considered: beach fill only, beach fill in combination with structures such as floodwalls, buried rubble-mound seawalls, dunes, stone revetments, interior drainage features, pump stations; and nonstructural measures such as relocations, buyouts, and flood proofing of threatened properties.

FOR FURTHER INFORMATION CONTACT: Questions about the proposed action and the DEIS can be answered by Ms. Megan B. Grubb, (212) 264–5759, U.S. Army Engineer District, New York Planning Division, ATTN: CENAN–PL–EA, 26 Federal Plaza, New York, NY 10278–0090.

SUPPLEMENTARY INFORMATION:

Project Location: This notice announces of the feasibility phase study for beach erosion control, storm damage reduction and related purposes along the north shore of Long Island at Bayville, NY. The study area extends from Long Island Sound on the north, Mill Neck Creek and Oyster Bay on the South, Centre Island on the east and the western boundary of the Village of Bayville on the west.

Project Authorization and History: The North Shore of Long Island, Village of Bayville, New York, Hurricane and Storm Damage Reduction Study was authorized by a resolution of the U.S.

House of Representatives Committee on Public Works and Transportation, adopted May 13, 1993. In response to the study resolution and a State request following the devastating coastal storm of December 1992, the USACE performed a Reconnaissance Study and issued a Reconnaissance Report in September 1995 that demonstrated potential Federal interest and the need for a more detailed feasibility study.

Project Need: The Long Island northern shoreline has historically experienced coastal erosion and related storm damage, most recently from the two storms of September 1996 and October 1996, and also from previous storms including the Christmas Eve 1994 storm, the March 1993 Blizzard of the Century, the December 1992 northeaster, Hurricane Danielle of September 1992 and the Halloween Storm of 1991. These storms caused evacuations in several north shore communities as well as damage from flooding and loss of structures from erosion. The December 1992 storm alone inundated hundreds of residential and business properties and caused damages estimated at $12,000,000. Approximately 300 families were evacuated and several sections of Bayville Avenue were impassable for days. The loss of beachfront in some areas now leaves the site increasingly vulnerable to severe damages even from moderate storms.

DEIS Scope: The intended DEIS will evaluate the potential environmental and cultural impacts associated with the purposed hurricane and storm damage reduction alternatives for the Village of Bayville, NY.

Public Involvement: The USACE intends to schedule an interagency meeting and public scoping meeting in spring/summer 2002 to discuss the scope of the DEIS and data gaps. The public scoping meeting place, date, and time will be advertised in advanced in local newspapers, and meeting announcement letters will be sent to interested parties. A scoping document will be made available at least one month before scheduled public scoping meeting date at the following locations:

(1) Bayville Free Library, 34 School Street, Nayville, NY 11709.

(2) Oyster Bay-East Norwich Public Library, 89 E. Main St., Oyster Bay, NY 11771.

The public will have an opportunity to provide written and oral comments at the public scoping meeting. Written comments may also be submitted via mail and should be directed to Ms. Megan B. Grubb at the address listed above under **FOR FURTHER INFORMATION CONTACT** heading. The USACE plans to issue the DEIS in Spring 2003. The USACE will announce availability of the draft in the **Federal Register** and other media, and will provide the public, organization, and agencies with the opportunity to submit comments, which will be addressed in the Final Environmental Impact Statement.

Luz D. Ortiz,

Army Federal Register Liaison Officer.

[FR Doc. 02–1146 Filed 1–15–02; 8:45 am]

BILLING CODE 3710–06–M

DEPARTMENT OF DEFENSE

Department of the Army; Corps of Engineers

Public Scoping Meeting for Va Shly'ay Akimel Salt River Restoration Project, Maricopa County, Arizona (Revised Date)

AGENCY: U.S. Army Corps of Engineers, DoD.

ACTION: Notice of meeting.

SUMMARY: The Los Angeles District intends to prepare an Environmental Impact Statement (EIS) to support the proposed study for the Salt River Pima-Maricopa Indian Community and the City of Mesa. A notice of ''Intent to Prepare a Draft Environmental Impact Statement for Va Shly'ay Akimel Salt River Restoration Project, Maricopa County, Arizona'' was previously published in the **Federal Register** (66 FR 55644, November 2, 2001). In that notice the Corps indicated that a public scoping meeting would be held some time in November 2001. Because of logistical considerations, the meeting was not held at that time. This notice provides information on the rescheduled meeting.

ADDRESSES: Commander, U.S. Army Corps of Engineers, Attn: Stephen Dibble, CESPL–PD–RN, Los Angeles District, Ecosystem Planning Section, P.O. Box 532711, Los Angeles, CA 90053–2325.

DATES: January 24, 2002, 6:00 PM, Scottsdale, AZ 85256.

FOR FURTHER INFORMATION CONTACT: Mr. Stephen Dibble, Environmental Manager, at (213) 452–3849. He can also be reached by e-mail at *ddibble@spl.usace.army.mil.*

SUPPLEMENTARY INFORMATION:

1. *Scoping Process:* The Corps will conduct a scoping meeting prior to preparing the Environmental Impact Statement to aid in determining the significant environmental issues associated with the proposed action. The public, as well as Federal, State, and local agencies are encouraged to participate in the scoping process by submitting data, information, and comments identifying relevant environmental and socioeconomic issues to be addressed in the environmental analysis. Useful information includes other environmental studies, published and unpublished data, alternatives that should be addressed in the analysis, and potential mitigation measures associated with the proposed action.

A public scoping meeting will be held in conjunction with the local sponsor to discuss the project scope and invite public participation in developing alternatives for the project. Individuals and agencies may offer information or data relevant to the environmental or socioeconomic impacts by attending the public scoping meeting, or by mailing the information to the above address.

2. *Public Scoping Meeting:* A public scoping meeting will be held on January 24, 2002 at 6:00 PM.

Location: Salt River Pima Maricopa Indian Community, Multi-purpose Building, 1880 N Longmore, Scottsdale, AZ 85256.

Luz D. Ortiz,

Army Federal Register Liaison Officer.

[FR Doc. 02–1149 Filed 1–15–02; 8:45 am]

BILLING CODE 3710–KF–M

DEPARTMENT OF EDUCATION

Submission for OMB Review; Comment Request

AGENCY: Department of Education.

SUMMARY: The Leader, Regulatory Information Management Group, Office of the Chief Information Officer invites comments on the submission for OMB review as required by the Paperwork Reduction Act of 1995.

DATES: Interested persons are invited to submit comments on or before February 15, 2002.

ADDRESSES: Written comments should be addressed to the Office of Information and Regulatory Affairs, Attention: Karen Lee, Desk Officer, Department of Education, Office of Management and Budget, 725 17th Street, NW., Room 10202, New Executive Office Building, Washington, DC 20503 or should be electronically mailed to the internet address *Karen_F._Lee@omb.eop.gov.*

SUPPLEMENTARY INFORMATION: Section 3506 of the Paperwork Reduction Act of 1995 (44 U.S.C. Chapter 35) requires that the Office of Management and Budget (OMB) provide interested

Federal agencies and the public an early opportunity to comment on information collection requests. OMB may amend or waive the requirement for public consultation to the extent that public participation in the approval process would defeat the purpose of the information collection, violate State or Federal law, or substantially interfere with any agency's ability to perform its statutory obligations. The Leader, Regulatory Information Management Group, Office of the Chief Information Officer, publishes that notice containing proposed information collection requests prior to submission of these requests to OMB. Each proposed information collection, grouped by office, contains the following: (1) Type of review requested, e.g. new, revision, extension, existing or reinstatement; (2) Title; (3) Summary of the collection; (4) Description of the need for, and proposed use of, the information; (5) Respondents and frequency of collection; and (6) Reporting and/or Recordkeeping burden. OMB invites public comment.

Dated: January 10, 2002.

John Tressler,

Leader, Regulatory Information Management, Office of the Chief Information Officer.

Office of the Undersecretary

Type of Review: Revision.

Title: Safe and Drug-Free Schools and Communities Act of the Governor's Report Forms.

Frequency: Annually.

Affected Public: State, Local, or Tribal Gov't, SEAs or LEAs.

Reporting and Recordkeeping Hour Burden: Responses: 56.

Burden Hours: 2,240.

Abstract: Section 4117 of the Safe and Drug-Free Schools and Communities Act (SDFSCA) requires state chief executive officers to submit to the Secretary on a triennial basis a report on the implementation and outcomes of Governor's SDFSCA programs. ED must report to the President and Congress regarding the national impact of SDFSCA programs.

Requests for copies of the proposed information collection request may be accessed from *http://edicsweb.ed.gov,* or should be addressed to Vivian Reese, Department of Education, 400 Maryland Avenue, SW., Room 4050, Regional Office Building 3, Washington, DC 20202–4651 or to the e-mail address *vivian.reese@ed.gov.* Requests may also be electronically mailed to the internet address *OCIO_RIMG@ed.gov* or faxed to 202–708–9346. Please specify the complete title of the information collection when making your request.

Comments regarding burden and/or the collection activity requirements should be directed to Kathy Axt at her internet address *Kathy.Axt@ed.gov.* Individuals who use a telecommunications device for the deaf (TDD) may call the Federal Information Relay Service (FIRS) at 1–800–877–8339.

[FR Doc. 02–1061 Filed 1–15–02; 8:45 am]

BILLING CODE 4000–01–P

DEPARTMENT OF EDUCATION

[CFDA Nos. 84.038, 84.033, and 84.007]

Student Financial Assistance; Federal Perkins Loan, Federal Work-Study, and Federal Supplemental Educational Opportunity Grant Programs

AGENCY: Department of Education.

ACTION: Notice of the closing date for institutions to file an Application for Approval to Participate in Federal Student Financial Aid Programs (ED Form E40–34P, OMB #1845–0012) to participate in the Federal Perkins Loan, Federal Work-Study, and Federal Supplemental Educational Opportunity Grant programs (known collectively as the campus-based programs) for the 2002–2003 award year.

SUMMARY: We invite currently non-participating institutions of higher education who filed a Fiscal Operations Report and Application to Participate (FISAP) (ED Form 646–1), to submit to the U.S. Department of Education (Department) an Application for Approval to Participate in Federal Student Financial Aid Programs. In order to participate in one or more of the campus-based programs for the 2002–2003 award year, non-participating institutions must submit an Application for Approval to Participate in Federal Student Financial Aid Programs and all required supporting documents for an eligibility and certification determination by the Department.

The campus-based programs are authorized by title IV of the Higher Education Act of 1965, as amended (HEA). The 2002–2003 award year is July 1, 2002, through June 30, 2003.

CLOSING DATE: To participate in the campus-based programs in the 2002–2003 award year, a currently non-participating institution must electronically submit its Application for Approval to Participate in Federal Student Financial Aid Programs on or before February 15, 2002. The application, along with all required supporting documents for an eligibility and certification determination, must be submitted to Case Management and Oversight at one of the addresses indicated below.

ADDRESSES: *Applications.* Paper applications are no longer being accepted. Electronic applications must be submitted through the ED website www.eligcert.ed.gov. Required supporting documents delivered by mail must be addressed to the U.S. Department of Education, Case Management and Oversight, Data Management and Analysis, Document Receipt and Control Center, P.O. Box 44805, L'Enfant Plaza Station, Washington DC 20026–4805.

Required Supporting Documents Delivered by Mail. An applicant must show proof of mailing consisting of one of the following: (1) A legibly dated U.S. Postal Service postmark; (2) a legible mail receipt with the date of mailing stamped by the U.S. Postal service; (3) a dated shipping label, invoice, or receipt from a commercial carrier; or (4) any other proof of mailing acceptable to us.

If documents are sent through the U.S. Postal Service, we do not accept either of the following as proof of mailing: (1) A private metered postmark, or (2) a mail receipt that is not dated by the U.S. Postal Service.

An applicant should note that the U.S. Postal Service does not uniformly provide a dated postmark. Before relying on this method, an applicant should check with its local post office.

An applicant is encouraged to use certified or at least first class mail. Institutions that submit an Application for Approval to Participate in Federal Student Financial Aid Programs and required supporting documents after the closing date of February 15, 2002, will not be considered for funding under the campus-based programs for award year 2002–2003.

Required Supporting Documents Delivered by Hand. An Application for Approval to Participate in Federal Student Financial Aid Programs must be submitted electronically through the ED website *www.eligcert.ed.gov.* Supporting documents delivered by hand must be taken to the U.S. Department of Education, Case Management and Oversight, Data Management and Analysis, Document Receipt and Control Center, 7th and D Streets, SW, Regional Office Building 3, (GSA Building), Room 5643, Washington, DC 20407. We will accept hand-delivered documents between 8:00 a.m. and 4:30 p.m. (Eastern time) daily, except Saturdays, Sundays, and Federal holidays. An Application for Approval

to Participate in Federal Student Financial Aid Programs for the 2002–2003 award year will not be accepted after 4:30 p.m. on February 15, 2002.

SUPPLEMENTARY INFORMATION: We allocate funds to eligible higher education institutions in each of the campus-based programs. We will not allocate funds under the campus-based programs for award year 2002–2003 to any currently non-participating institution unless the institution files its Application for Approval to Participate in Federal Student Financial Aid Programs and required supporting documents by the closing date. If the institution submits its Application for Approval to Participate in Federal Student Financial Aid Programs or other required supporting documents after the February 15, 2002 closing date, we will use this application in determining the institution's eligibility to participate in the campus-based programs beginning with the 2003–2004 award year.

For purposes of this notice, ineligible institutions include only:

(1) An institution that has not been designated as an eligible institution by the Department, but has previously filed a FISAP; or

(2) An additional location of an eligible institution that is currently not included in the Department's eligibility certification for that eligible institution, but has been included in the institution's 2002–2003 FISAP.

Applicable Regulations

The following regulations apply to the campus-based programs:

(1) Student Assistance General Provisions, 34 CFR part 668.

(2) General Provisions for the Federal Perkins Loan Program, Federal Work-Study Program, and Federal Supplemental Educational Opportunity Grant Program, 34 CFR part 673.

(3) Federal Perkins Loan Program, 34 CFR part 674.

(4) Federal Work-Study Program, 34 CFR part 675.

(5) Federal Supplemental Opportunity Grant Program, 34 CFR part 676.

(6) Institutional Eligibility Under the Higher Education Act of 1965, as amended, 34 CFR part 600.

(7) New Restrictions on Lobbying, 34 CFR part 82.

(8) Governmentwide Debarment and Suspension (Nonprocurement) and Governmentwide Requirements for Drug-Free Workplace (Grants), 34 CFR part 85.

(9) Drug-Free Schools and Campuses, 34 CFR part 86.

FOR FURTHER INFORMATION CONTACT: For information concerning designation of eligibility, contact the appropriate ED Case Management and Oversight (CMO) case management team by telephone, fax, or the Internet. The case management teams are listed with telephone and fax numbers and Internet addresses in the Application for Approval to Participate in Federal Student Financial Aid Programs on pages 5, 6, and 7 of the Introduction. For technical assistance concerning the FISAP or other operational procedures of the campus-based programs, contact: Sandra K. Donelson, Campus-Based Operations, telephone: (202) 377–3183, fax: (202) 275–3476 or via Internet: *Sandra.Donelson@ed.gov.*

If you use a telecommunications device for the deaf (TDD) you may call the Federal Information Relay Service (FIRS) at 1–800–877–8339.

Individuals with disabilities may obtain this document in an alternative format (*e.g.,* Braille, large print, audiotape, or computer diskette) by contacting the Alternate Format Center at (202) 260–9895 between 8:30 a.m. and 4:30 p.m., Eastern time, Monday through Friday.

Electronic Access to This Document

You may view this document, as well as all other Department of Education documents published in the **Federal Register**, in text or Adobe Portable Document Format (PDF) on the Internet at the following site: *www.ed.gov/legislation/FedRegister.*

To use PDF you must have the Adobe Acrobat Reader, which is available free at this site. If you have questions about using PDF, call the U.S. Government Printing Office (GPO), toll free at 1–888–293–6498; or in the Washington, DC, area at (202) 512–1530.

Note: The official version of this document is the document published in the **Federal Register**. Free Internet access to the official edition of the **Federal Register** and the Code of Federal Regulations is available on GPO Access at: *http://www.access.gpo.gov/nara/index.html.*

Program Authority: 20 U.S.C. 1087aa *et seq.*; 42 U.S.C. 2751 *et seq.*; and 20 U.S.C. 1070b *et seq.*

Dated: January 10, 2002.

Greg Woods,

Chief Operating Officer, Office of Student Financial Assistance.

[FR Doc. 02–1096 Filed 1–15–02; 8:45 am]

BILLING CODE 4000–01–P

DEPARTMENT OF ENERGY

Federal Energy Regulatory Commission

[Docket No. RP02–141–000]

Algonquin Gas Transmission Company; Notice of Proposed Changes in FERC Gas Tariff

January 10, 2002.

Take notice that on January 8, 2002, Algonquin Gas Transmission Company (Algonquin) tendered for filing as part of its FERC Gas Tariff, Fourth Revised Volume No. 1, the following tariff sheets proposed to be effective on February 7, 2002:

Second Revised Sheet No. 930
First Revised Sheet No. 931
First Revised Sheet No. 932
First Revised Sheet No. 933
First Revised Sheet No. 934
Second Revised Sheet No. 935

Algonquin states that the purpose of this filing is to modify the LINKr System Agreement contained in its tariff to: (1) Remove certain outdated provisions related to software needed to access Algonquin's LINKr Customer Interface System; (2) remove Algonquin LNG, Inc. as a party to the agreement; (3) add Egan Hub Partners, L.P. and Moss Bluff Hub Partners, L.P. as parties to the agreement; (4) add language that was inadvertently omitted from the agreement originally submitted for inclusion in the tariff; (5) provide that notices can be sent to any specified address instead of only to a post office address; and (6) reflect certain non-substantive changes.

Algonquin states that copies of its filing have been mailed to all affected customers and interested state commissions.

Any person desiring to be heard or to protest said filing should file a motion to intervene or a protest with the Federal Energy Regulatory Commission, 888 First Street, NE., Washington, DC 20426, in accordance with sections 385.214 or 385.211 of the Commission's rules and regulations. All such motions or protests must be filed in accordance with section 154.210 of the Commission's regulations. Protests will be considered by the Commission in determining the appropriate action to be taken, but will not serve to make protestants parties to the proceedings. Any person wishing to become a party must file a motion to intervene. Copies of this filing are on file with the Commission and are available for public inspection. This filing may also be viewed on the web at *http://www.ferc.gov* using the ''RIMS'' link,

select ''Docket#'' and follow the instructions (call 202–208–2222 for assistance). Comments, protests and interventions may be filed electronically via the Internet in lieu of paper. See, 18 CFR 385.2001(a)(1)(iii) and the instructions on the Commission's web site under the ''e-Filing'' link.

C.B. Spencer,

Acting Secretary.

[FR Doc. 02–1083 Filed 1–15–02; 8:45 am]

BILLING CODE 6717–01–P

DEPARTMENT OF ENERGY

Federal Energy Regulatory Commission

[Docket No. RP01–602–001]

Dominion Transmission, Inc.; Notice of Compliance Filing and Cancellation of Part 157 Service Agreements

January 10, 2002.

Take notice that on January 4, 2002, Dominion Transmission, Inc. (DTI) tendered for filing to be part of its FERC Gas Tariff, the revised tariff sheets listed below, with an effective date of January 1, 2002:

Third Revised Volume No. 1

Second Revised Sheet No. 8
Seventh Revised Sheet No. 1300

First Revised Volume No. 2

First Revised Sheet No. 7
First Revised Sheet No. 414–427
First Revised Sheet No. 469–483

DTI states that the filing is being filed in compliance with the letter order issued in the captioned proceedings on October 30, 2001.

In the letter order, the Commission approved the conversion of the individually certificated services that DTI has historically provided to Doswell Limited Partnership (Doswell) and Virginia Power Services Energy Corporation, Inc. (Virginia Power) to open access services under part 284 of the Commission's regulations. DTI explains that the Commission required DTI to advise the Commission of the effective date of the conversion and to file a tariff sheet listing the non-conforming agreements and notice of the cancellation of the individually certificated service agreements at that time.

DTI explains in its filing that the conversion of its services to Doswell and Virginia Power to part 284 service became effective on January 1, 2002.

DTI states that copies of its letter of transmittal and enclosures have been served upon DTI's customers and interested state commissions.

Any person desiring to protest said filing should file a protest with the Federal Energy Regulatory Commission, 888 First Street, NE., Washington, DC. 20426, in accordance with Section 385.211 of the Commission's Rules and Regulations. All such protests must be filed in accordance with section 154.210 of the Commission's Regulations. Protests will be considered by the Commission in determining the appropriate action to be taken, but will not serve to make protestants parties to the proceedings. Copies of this filing are on file with the Commission and are available for public inspection. This filing may also be viewed on the web at *http://www.ferc.gov* using the ''RIMS'' link, select ''Docket#'' and follow the instructions (call 202–208–2222 for assistance). Comments, protests and interventions may be filed electronically via the Internet in lieu of paper. See, 18 CFR 385.2001(a)(1)(iii) and the instructions on the Commission's web site under the ''e-Filing'' link.

C.B. Spencer,

Acting Secretary.

[FR Doc. 02–1077 Filed 1–15–02; 8:45 am]

BILLING CODE 6717–01–P

DEPARTMENT OF ENERGY

Federal Energy Regulatory Commission

[Docket No. CP01–80–002]

East Tennessee Natural Gas Company; Notice of Compliance Filing

January 10, 2002.

Take notice that on January 4, 2002, East Tennessee Natural Gas Company (East Tennessee) tendered for filing as part of its FERC Gas Tariff, Second Revised Volume No. 1, the following tariff sheets proposed to be effective February 1, 2002:

Twenty-third Revised Sheet No. 4
Second Revised Sheet No. 4A

East Tennessee states that the purpose of this filing is to comply with the Commission's October 11, 2001 Order that authorized East Tennessee to construct, own, operate and maintain certain pipeline facilities to provide firm transportation service to the Murray Project shippers at the proposed initial incremental FT–A recourse rate of $7.646 or, on a daily demand basis, $0.2514.

Any person desiring to protest said filing should file a protest with the Federal Energy Regulatory Commission, 888 First Street, NE., Washington, DC 20426, in accordance with Section 385.211 of the Commission's Rules and Regulations. All such protests must be filed in accordance with Section 154.210 of the Commission's Regulations. Protests will be considered by the Commission in determining the appropriate action to be taken, but will not serve to make protestants parties to the proceedings. Copies of this filing are on file with the Commission and are available for public inspection. This filing may also be viewed on the web at *http://www.ferc.gov* using the ''RIMS'' link, select ''Docket#'' and follow the instructions (call 202–208–2222 for assistance). Comments, protests and interventions may be filed electronically via the Internet in lieu of paper. See, 18 CFR 385.2001(a)(1)(iii) and the instructions on the Commission's web site under the ''e-Filing'' link.

C.B. Spencer,

Acting Secretary.

[FR Doc. 02–1076 Filed 1–15–02; 8:45 am]

BILLING CODE 6717–01–P

DEPARTMENT OF ENERGY

Federal Energy Regulatory Commission

[Docket No. RP02–138–000]

East Tennessee Natural Gas Company; Notice of Proposed Changes in FERC Gas Tariff

January 10, 2002.

Take notice that on January 8, 2002, East Tennessee Natural Gas Company (East Tennessee) tendered for filing as part of its FERC Gas Tariff, Second Revised Volume No. 1, the following tariff sheets, proposed to be effective on February 7, 2002:

Fourth Revised Sheet No. 266
Fourth Revised Sheet No. 267
Third Revised Sheet No. 269
Fourth Revised Sheet No. 270

East Tennessee states that the purpose of this filing is to modify the LINKr System Agreement contained in its tariff to: (1) Remove certain outdated provisions related to software needed to access East Tennessee's LINKr Customer Interface System; (2) add Egan Hub Partners, L.P. and Moss Bluff Hub Partners, L.P. as parties to the agreement; (3) provide that notices can be sent to any specified address instead of only to a post office address; and (4) reflect certain non-substantive changes.

East Tennessee states that copies of its filing have been mailed to all affected customers and interested state commissions.

Any person desiring to be heard or to protest said filing should file a motion to intervene or a protest with the

Federal Energy Regulatory Commission, 888 First Street, NE., Washington, DC 20426, in accordance with sections 385.214 or 385.211 of the Commission's Rules and Regulations. All such motions or protests must be filed in accordance with section 154.210 of the Commission's Regulations. Protests will be considered by the Commission in determining the appropriate action to be taken, but will not serve to make protestants parties to the proceedings. Any person wishing to become a party must file a motion to intervene. Copies of this filing are on file with the Commission and are available for public inspection. This filing may also be viewed on the Web at *http://www.ferc.gov* using the ''RIMS'' link, select ''Docket#'' and follow the instructions (call 202–208–2222 for assistance). Comments, protests and interventions may be filed electronically via the Internet in lieu of paper. *See*, 18 CFR 385.2001(a)(1)(iii) and the instructions on the Commission's Web site under the ''e-Filing'' link.

C.B. Spencer,

Acting Secretary.

[FR Doc. 02–1080 Filed 1–15–02; 8:45 am]

BILLING CODE 6717–01–P

DEPARTMENT OF ENERGY

Federal Energy Regulatory Commission

[Docket No. RP02–142–000]

Eastern Shore Natural Gas Company; Notice of Proposed Changes in FERC Gas Tariff

January 10, 2002.

Take notice that on January 8, 2002, Eastern Shore Natural Gas Company (ESNG) tendered for filing as part of its FERC Gas Tariff, Second Revised Volume No. 1, certain revised tariff sheets in the above captioned docket, bear a proposed effective date of February 1, 2002.

ESNG states that the purpose of this instant filing is to track rate changes attributable to storage services purchased from Columbia Gas Transmission Corporation (Columbia) under its Rate Schedules FSS and SST. The costs of the above referenced storage services comprise the rates and charges payable under ESNG's respective Rate Schedule CFSS. This tracking filing is being made pursuant to Section 3 of ESNG's Rate Schedule CFSS.

ESNG states that copies of the filing have been served upon its jurisdictional customers and interested State Commissions.

Any person desiring to be heard or to protest said filing should file a motion to intervene or a protest with the Federal Energy Regulatory Commission, 888 First Street, NE., Washington, DC 20426, in accordance with sections 385.214 or 385.211 of the Commission's rules and regulations. All such motions or protests must be filed in accordance with section 154.210 of the Commission's regulations. Protests will be considered by the Commission in determining the appropriate action to be taken, but will not serve to make protestants parties to the proceedings. Any person wishing to become a party must file a motion to intervene. Copies of this filing are on file with the Commission and are available for public inspection. This filing may also be viewed on the web at *http://www.ferc.gov* using the ''RIMS'' link, select ''Docket#'' and follow the instructions (call 202–208–2222 for assistance). Comments, protests and interventions may be filed electronically via the Internet in lieu of paper. See, 18 CFR 385.2001(a)(1)(iii) and the instructions on the Commission's web site under the ''e-Filing'' link.

C.B. Spencer,

Acting Secretary.

[FR Doc. 02–1084 Filed 1–15–02; 8:45 am]

BILLING CODE 6717–01–P

DEPARTMENT OF ENERGY

Federal Energy Regulatory Commission

[Docket No. RP02–135–000]

Iroquois Gas Transmission System, L.P.; Notice of Fuel Calculations

January 10, 2002.

Take notice that on December 31, 2001, Iroquois Gas Transmission System, L.P. (Iroquois) tendered for filing its schedules which reflect calculations supporting the Measurement Variance/Fuel Use Factors utilized by Iroquois during the period July 1, 2001 through December 31, 2001.

Iroquois states that data from the data base during this period had to be verified to ensure accurate and complete information. Iroquois states that the schedules attached to the filing include calculations supporting each of the following three components of Iroquois' composite Measurement Variance/Fuel Use Factor:

(1) Lost and unaccounted—for gas (Measurement Variance Factor);

(2) Fuel use associated with the transportation of gas by others on behalf of Iroquois (Account 858 Fuel Use Factor); and

(3) Fuel use associated with the transportation of gas on Iroquois' pipeline system (Account 854 Fuel Use Factor).

Any person desiring to be heard or to protest said filing should file a motion to intervene or a protest with the Federal Energy Regulatory Commission, 888 First Street, N.E., Washington, DC 20426, in accordance with sections 385.214 or 385.211 of the Commission's Rules and Regulations. All such motions or protests must be filed on or before January 17, 2002. Protests will be considered by the Commission in determining the appropriate action to be taken, but will not serve to make protestants parties to the proceedings. Any person wishing to become a party must file a motion to intervene. Copies of this filing are on file with the Commission and are available for public inspection in the Public Reference Room. This filing may also be viewed on the web at *http://www.ferc.gov* using the ''RIMS'' link, select ''Docket#'' and follow the instructions (call 202–208–2222 for assistance). Comments, protests and interventions may be filed electronically via the Internet in lieu of paper. See, 18 CFR 385.2001(a)(1)(iii) and the instructions on the Commission's web site under the ''e-Filing'' link.

C.B. Spencer,

Acting Secretary.

[FR Doc. 02–1079 Filed 1–15–02; 8:45 am]

BILLING CODE 6717–01–P

DEPARTMENT OF ENERGY

Federal Energy Regulatory Commission

[Docket No. RP02–140–000]

Maritimes & Northeast Pipeline, L.L.C.; Notice of Proposed Changes in FERC Gas Tariff

January 10, 2002.

Take notice that on January 8, 2002, Maritimes & Northeast Pipeline, L.L.C. (Maritimes) tendered for filing as part of its FERC Gas Tariff, First Revised Volume No. 1, the following tariff sheets proposed to be effective on February 7, 2002:

First Revised Sheet No. 480
First Revised Sheet No. 481
First Revised Sheet No. 482
First Revised Sheet No. 483
First Revised Sheet No. 484

Maritimes states that the purpose of this filing is to modify the LINKr System Agreement contained in its tariff to: (1) Remove certain outdated provisions related to software needed to access Maritimes' LINKr Customer Interface System; (2) add language that was inadvertently omitted from the agreement originally submitted for inclusion in the tariff; (3) provide that notices can be sent to any specified address instead of only to a post office address; and (4) reflect certain minor editorial changes.

Maritimes states that copies of its filing have been mailed to all affected customers and interested state commissions.

Any person desiring to be heard or to protest said filing should file a motion to intervene or a protest with the Federal Energy Regulatory Commission, 888 First Street, NE., Washington, DC 20426, in accordance with Sections 385.214 or 385.211 of the Commission's Rules and Regulations. All such motions or protests must be filed in accordance with Section 154.210 of the Commission's Regulations. Protests will be considered by the Commission in determining the appropriate action to be taken, but will not serve to make protestants parties to the proceedings. Any person wishing to become a party must file a motion to intervene. Copies of this filing are on file with the Commission and are available for public inspection. This filing may also be viewed on the Web at *http://www.ferc.gov* using the ''RIMS'' link, select ''Docket#'' and follow the instructions (call 202–208–2222 for assistance). Comments, protests and interventions may be filed electronically via the Internet in lieu of paper. *See*, 18 CFR 385.2001(a)(1)(iii) and the instructions on the Commission's Web site under the ''e-Filing'' link.

C.B. Spencer,

Acting Secretary.

[FR Doc. 02–1082 Filed 1–15–02; 8:45 am]

BILLING CODE 6717–01–P

DEPARTMENT OF ENERGY

Federal Energy Regulatory Commission

[Project No. 2016]

City of Tacoma; Notice of Authorization for Continued Project Operation

January 10, 2002.

On December 27, 1999, the City of Tacoma, licensee for the Cowlitz River Project No. 2016, filed an application for a new or subsequent license pursuant to the Federal Power Act (FPA) and the Commission's regulations thereunder. Project No. 2016 is located on the Cowlitz River in Lewis County, Washington.

The license for Project No. 2016 was issued for a period ending December 31, 2001. Section 15(a)(1) of the FPA, 16 U.S.C. 808(a)(1), requires the Commission, at the expiration of a license term, to issue from year to year an annual license to the then licensee under the terms and conditions of the prior license until a new license is issued, or the project is otherwise disposed of as provided in Section 15 or any other applicable section of the FPA. If the project's prior license waived the applicability of section 15 of the FPA, then, based on section 9(b) of the Administrative Procedure Act, 5 U.S.C. 558(c), and as set forth at 18 CFR 16.21(a), if the licensee of such project has filed an application for a subsequent license, the licensee may continue to operate the project in accordance with the terms and conditions of the license after the minor or minor part license expires, until the Commission acts on its application. If the licensee of such a project has not filed an application for a subsequent license, then it may be required, pursuant to 18 CFR 16.21(b), to continue project operations until the Commission issues someone else a license for the project or otherwise orders disposition of the project.

If the project is subject to section 15 of the FPA, notice is hereby given that an annual license for Project No. 2016 is issued to the City of Tacoma for a period effective January 1, 2002, through December 31, 2002, or until the issuance of a new license for the project or other disposition under the FPA, whichever comes first. If issuance of a new license (or other disposition) does not take place on or before January 1, 2003, notice is hereby given that, pursuant to 18 CFR 16.18(c), an annual license under section 15(a)(1) of the FPA is renewed automatically without further order or notice by the Commission, unless the Commission orders otherwise.

If the project is not subject to section 15 of the FPA, notice is hereby given that the City of Tacoma is authorized to continue operation of the Cowlitz River Project No. 2016 until such time as the Commission acts on its application for subsequent license.

C.B. Spencer,

Acting Secretary.

[FR Doc. 02–1086 Filed 1–15–02; 8:45 am]

BILLING CODE 6717–01–P

DEPARTMENT OF ENERGY

Federal Energy Regulatory Commission

[Docket No. RP02–139–000]

Texas Eastern Transmission, LP; Notice of Proposed Changes in FERC Gas Tariff

January 10, 2002.

Take notice that on January 8, 2002, Texas Eastern Transmission, LP (Texas Eastern) tendered for filing as part of its FERC Gas Tariff, Seventh Revised Volume No. 1, the following tariff sheets proposed to be effective on February 7, 2002:

First Revised Sheet No. 1071
First Revised Sheet No. 1072
First Revised Sheet No. 1074
First Revised Sheet No. 1075

Texas Eastern states that the purpose of this filing is to modify the LINKr System Agreement contained in its tariff to: (1) Remove certain outdated provisions related to software needed to access Texas Eastern's LINKr Customer Interface System; (2) add Egan Hub Partners, L.P. and Moss Bluff Hub Partners, L.P. as parties to the agreement; and (3) provide that notices can be sent to any specified address instead of only to a post office address.

Texas Eastern states that copies of its filing have been mailed to all affected customers and interested state commissions.

Any person desiring to be heard or to protest said filing should file a motion to intervene or a protest with the Federal Energy Regulatory Commission, 888 First Street, NE., Washington, DC 20426, in accordance with sections 385.214 or 385.211 of the Commission's Rules and Regulations. All such motions or protests must be filed in accordance with section 154.210 of the Commission's Regulations. Protests will be considered by the Commission in determining the appropriate action to be taken, but will not serve to make protestants parties to the proceedings. Any person wishing to become a party must file a motion to intervene. Copies of this filing are on file with the Commission and are available for public inspection. This filing may also be viewed on the Web at *http://www.ferc.gov* using the ''RIMS'' link, select ''Docket#'' and follow the instructions (call 202–208–2222 for assistance). Comments, protests and interventions may be filed electronically via the Internet in lieu of paper. *See,* 18 CFR 385.2001(a)(1)(iii) and the

instructions on the Commission's Web site under the ''e-Filing'' link.

C.B. Spencer,

Acting Secretary.

[FR Doc. 02–1081 Filed 1–15–02; 8:45 am]

BILLING CODE 6717–01–P

DEPARTMENT OF ENERGY

Federal Energy Regulatory Commission

[Docket No. RP02–33–001]

Wyoming Interstate Company, Ltd.; Notice of Compliance Filing

January 10, 2002.

Take notice that on January 4, 2002, Wyoming Interstate Company, Ltd. (WIC), tendered for filing as part of its FERC Gas Tariff, Second Revised Volume No. 2, Ninth Revised Sheet No. 4B, to become effective February 1, 2002.

WIC states that the tendered tariff sheet revises the fuel charges applicable to transportation service on WIC's system. The tariff sheet is proposed to become effective February 1, 2002.

Any person desiring to protest said filing should file a protest with the Federal Energy Regulatory Commission, 888 First Street, NE., Washington, DC 20426, in accordance with section 385.211 of the Commission's Rules and Regulations. All such protests must be filed in accordance with Section 154.210 of the Commission's Regulations. Protests will be considered by the Commission in determining the appropriate action to be taken, but will not serve to make protestants parties to the proceedings. Copies of this filing are on file with the Commission and are available for public inspection. This filing may also be viewed on the web at *http://www.ferc.gov* using the ''RIMS'' link, select ''Docket#'' and follow the instructions (call 202–208–2222 for assistance). Comments, protests and interventions may be filed electronically via the Internet in lieu of paper. See, 18 CFR 385.2001(a)(1)(iii) and the instructions on the Commission's web site under the ''e-Filing'' link.

C.B. Spencer,

Acting Secretary.

[FR Doc. 02–1078 Filed 1–15–02; 8:45 am]

BILLING CODE 6717–01–P

DEPARTMENT OF ENERGY

Federal Energy Regulatory Commission

[Docket No. ER91–569–019, et al.]

Entergy Services, Inc., et al.; Electric Rate and Corporate Regulation Filings

January 9, 2002.

Take notice that the following filings have been made with the Commission. Any comments should be submitted in accordance with Standard Paragraph E at the end of this notice.

1. Entergy Services, Inc.

[Docket No. ER91–569–019]

Take notice that on January 4, 2002, Entergy Services, Inc., on behalf of the five Entergy Operating Companies: Entergy Arkansas, Inc., Entergy Gulf States, Inc., Entergy Louisiana, Inc., Entergy Mississippi, Inc., and Entergy New Orleans, Inc. (together Entergy), submits this compliance filing in response to the Commission's November 20, 2001 Order in the above-captioned docket. A copy of this filing has been served upon the state regulators of the Entergy operating companies.

Comment Date: January 25, 2002.

2. Southern Company Energy Marketing L.P.

[Docket No. ER97–4166–011]

Take notice that on January 4, 2002, Southern Company Services, Inc. acting as agent for Alabama Power Company, Georgia Power Company, Gulf Power Company, Mississippi Power Company, and Savannah Electric and Power Company, submitted a compliance filing with the Federal Energy Regulatory Commission (Commission) in response to the Commission's directions in the above referenced docket.

Comment Date: January 25, 2002.

3. AEP Power Marketing, Inc., AEP Service Corporation, CSW Power Marketing, Inc., CSW Energy Services, Inc., Central and South West Services, Inc.

[Docket Nos. ER96–2495–017; ER97–4143–005; ER97–1238–012; ER98–2075–011; ER98–542–007]

Take notice that on January 4, 2002, American Electric Power Service Corporation (AEPSC), on behalf of itself and its affiliated power marketers, submits a report of its compliance in connection with the Commission's November 20, 2001 Order and December 20, 2001 Notice Delaying Effective Date of Mitigation and Announcing Technical Conference issued in the above-referenced dockets.

Comment Date: January 25, 2002.

4. Frederickson Power L.P.

[Docket No. ER01–2262–001]

Take notice that on January 4, 2002, Frederickson Power L.P. filed with the Federal Energy Regulatory Commission (Commission) an amendment to the application for authority to sell electric energy and capacity at market-based rates filed by it on June 8, 2001.

Comment Date: January 25, 2002.

5. Select Energy New York, Inc.

[Docket No. ER02–556–000]

Take notice that on December 13, 2001, Niagara Mohawk Energy Marketing, Inc., changed it name to Select Energy New York, Inc. Accordingly, Select Energy New York, Inc. is filing a Notice of Succession, with the Federal Energy Regulatory Commission's regulations 18 CFR parts 35.16 and 131.51.

Comment Date: January 22, 2002.

6. Florida Power & Light Company

[Docket No. ER02–696–000]

Take notice that on January 4, 2002 Florida Power & Light Company (FPL) tendered for filing a proposed service agreement with Georgia Transmission Corporation for Long-Term Firm transmission service under FPL's Open Access Transmission Tariff.

FPL requests that the proposed service agreement become effective on January 1, 2002.

Comment Date: January 25, 2002.

7. Ameren Energy, Inc. on behalf of Union Electric Company d/b/a AmerenUE and Ameren Energy Generating Company

[Docket No. ER02–697–000]

Take notice that on January 4, 2002, Ameren Energy, Inc. (Ameren Energy), on behalf of Union Electric Company d/b/a AmerenUE and Ameren Energy Generating Company (collectively, the Ameren Parties), pursuant to section 205 of the Federal Power Act, 16 U.S.C. 824d, and the market rate authority granted to the Ameren Parties, submitted for filing umbrella power sales service agreements under the Ameren Parties' market rate authorizations entered into with *Duke Energy Trading and Marketing, L.L.C.* Ameren Energy seeks Commission acceptance of these service agreements effective November 20, 2001.

Copies of this filing were served on the public utilities commissions of Illinois and Missouri and the respective counterparty.

Comment Date: January 25, 2002.

8. Pleasants Energy, LLC

[Docket No. ER02–698–000]

Take notice that on January 4, 2002, Pleasants Energy, LLC tendered for filing with the Federal Energy Regulatory Commission (Commission) a Power Purchase Agreement between Pleasants Energy, LLC and Dominion Nuclear Marketing I, Inc. and Dominion Nuclear Marketing II, Inc. The agreement is filed pursuant to Pleasants Energy's market based rate tariff, FERC Electric Tariff, Original Volume No. 1 (the Tariff) granted by the Commission by letter order dated December 6, 2001. Pleasants Energy, LLC requests an effective date for the agreement of December 5, 2001.

Copies of the filing were served upon the the Public Service Commission of West Virginia, the Virginia State Corporation Commission, and the North Carolina Utilities Commission.

Comment Date: January 25, 2002.

9. Constellation Power Source Maine, LLC

[Docket No. ER02–699–000]

Take notice that on January 4, 2002, Constellation Power Source Maine, LLC submitted for filing, pursuant to section 205 of the Federal Power Act, and part 35 of the Federal Energy Regulatory Commission's (Commission) regulations, a Petition for authorization to make sales of capacity, energy, and certain Ancillary Services at market-based rates, to reassign transmission capacity, to resell Firm Transmission Rights, and for certain waivers and blanket authorizations of the Commission's regulations typically granted to entities with market-based rate authorizations.

Comment Date: January 25, 2002.

10. Florida Power & Light Company

[Docket Nos. ER02–700–000]

Take notice that on January 4, 2002, Florida Power & Light Company (FPL) filed with the Federal Energy Regulatory Commission (Commission) an unexecuted Interconnection and Operation Agreement between FPL and PG&E Okeechobee Generating Company, LLC (PG&E Okeechobee) that sets forth the terms and conditions governing the interconnection between PG&E Okeechobee's generating project and FPL's transmission system. A copy of this filing has been served on PG&E Okeechobee and the Florida Public Service Commission.

Comment Date: January 25, 2002.

Standard Paragraph

E. Any person desiring to be heard or to protest such filing should file a motion to intervene or protest with the Federal Energy Regulatory Commission, 888 First Street, NE., Washington, DC 20426, in accordance with rules 211 and 214 of the Commission's rules of practice and procedure (18 CFR parts 385.211 and 385.214). All such motions or protests should be filed on or before the comment date. Protests will be considered by the Commission in determining the appropriate action to be taken, but will not serve to make protestants parties to the proceeding. Any person wishing to become a party must file a motion to intervene. Copies of this filing are on file with the Commission and are available for public inspection. This filing may also be viewed on the web at *http://www.ferc.gov* using the ''RIMS'' link, select ''Docket#'' and follow the instructions (call 202–208–2222 for assistance). Comments, protests and interventions may be filed electronically via the Internet in lieu of paper. See, 18 CFR part 385.2001(a)(1)(iii) and the instructions on the Commission's web site under the ''e-Filing'' link.

C.B. Spencer,

Acting Secretary.

[FR Doc. 02–1062 Filed 1–15–02; 8:45 am]

BILLING CODE 6717–01–P

DEPARTMENT OF ENERGY

Federal Energy Regulatory Commission

[Project Nos. 11516–000, 11120–002, and 11300–000—Michigan]

Commonwealth Power Company; Notice of Availability of Final Environmental Assessment

January 10, 2002.

In accordance with the National Environmental Policy Act of 1969 and the Federal Energy Regulatory Commission's (Commission) regulations, 18 CFR part 380 (Order No. 486, 52 FR 47897), the Office of Energy Projects has reviewed the application for license for the Irving, Middleville and LaBarge Hydroelectric Projects, located on the Thornapple River in Barry and Kent Counties, Michigan, and has prepared a Final Environmental Assessment (FEA) for the projects. No federal lands are occupied by the projects.

On March 29, 2001, the Commission staff issued a draft Environmental Assessment (EA) for the Irving, Middleville and LaBarge Hydroelectric Projects and requested that any comments be filed within 45 days. Comments were filed by three entities and are addressed in the final EA.

The FEA contains the staff's analysis of the potential environmental effects of the project and concludes that licensing the project, with appropriate environmental protective measures, would not constitute a major federal action that would significantly affect the quality of the human environment.

A copy of the FEA is on file with the Commission and is available for public inspection. The FEA may also be viewed on the web at *http://www.ferc.gov* using the ''RIMS'' link—select ''Docket#'' and follow the instructions (call 202–208–2222 for assistance).

For further information, contact Mark Pawlowski at (202) 219–2795.

C.B. Spencer,

Acting Secretary.

[FR Doc. 02–1085 Filed 1–15–02; 8:45 am]

BILLING CODE 6717–01–P

DEPARTMENT OF ENERGY

Federal Energy Regulatory Commission

Notice of Application Tendered for Filing With the Commission, Soliciting Additional Study Requests, and Establishing Procedures for Relicensing and a Deadline for Submission of Final Amendments

January 10, 2002.

Take notice that the following hydroelectric application has been filed with the Commission and is available for public inspection.

a. *Type of Application:* New Major License.

b. *Project No.:* 5334.

c. *Date Filed:* October 2, 2001.

d. *Applicant:* Charter Township of Ypsilanti.

e. *Name of Project:* Ford Lake Hydroelectric Station.

f. *Location:* On the Huron River, Washtenaw County, within the township of Ypsilanti, MI. The project does not affect Federal lands.

g. *Filed Pursuant to:* Federal Power Act 16 U.S.C. 791 (a)–825(r).

h. *Applicant Contact:* Ms. Joann Brinker, Administrative Services/Human Resources Director, Charter Township of Ypsilanti, 7200 South Huron River Drive, Ypsilanti, MI 48197, (734) 484–0065.

i. *FERC Contact:* Monte TerHaar, (202) 219–2768 or *monte.terhaar@ferc.fed.us.*

j. *Deadline for filing additional study requests:* 60 days from issuance date of this notice.

All documents (original and eight copies) should be filed with: Secretary,

Federal Energy Regulatory Commission, 888 First Street, NE, Washington, DC 20426.

The Commission's Rules of Practice require all intervenors filing documents with the Commission to serve a copy of that document on each person on the official service list for the project. Further, if an intervenor files comments or documents with the Commission relating to the merits of an issue that may affect the responsibilities of a particular resource agency, they must also serve a copy of the document on that resource agency.

k. This application is not ready for environmental analysis at this time. We are not requesting intervenors to this project at this time.

l. The existing Ford Lake Hydroelectric Project consists of: (1) A 1,050 acre reservoir; (2) a 110-foot-long earth embankment dam; (3) a 46.5-foot powerhouse with 2 hydroelectric turbines; (4) a 172-foot-long spillway with six bays, each with a 6-foot by 8-foot sluice gate; (5) a 380-foot-long earth embankment; (6) a 175-foot-long emergency spillway; (7) two vertical shaft turbine/generator units with an installed capacity of 1,920 kilowatts at normal pool elevation; and (8) appurtenant facilities. The project operates run-of-river with a normal reservoir elevation maintained between 684.4 and 684.9 feet M.S.L. Average annual generation between 1995 and 2000 has been 8,664 megawatthours. Generated power is sold to Detroit Power. No new facilities are proposed.

m. A copy of the application is available for inspection and reproduction at the Commission's Public Reference Room, located at 888 First Street, NE, Room 2–A, Washington, DC 20426, or by calling (202) 208–1371. The application may be viewed on http://www.ferc.fed.us/online/rims.htm (call (202) 208–2222 for assistance). A copy is also available for inspection and reproduction at the address in item h above.

n. With this notice, we are initiating consultation with the *Michigan State Historic Preservation Officer (SHPO)*, as required by § 106, National Historic Preservation Act, and the regulations of the Advisory Council on Historic Preservation, 36, CFR, at § 800.4.

o. Procedural schedule and final amendments: The application will be processed according to the following milestones, some of which may be combined to expedite processing:

Notice of application has been accepted for filing
Notice of NEPA Scoping
Notice of application is ready for environmental analysis
Notice soliciting final terms and conditions
Notice of the availability of the draft NEPA document (draft EA)
Notice of the availability of the final NEPA document (final EA)
Order issuing the Commission's decision on the application

Final amendments to the application must be filed with the Commission no later than 30 days from the issuance date of the notice of ready for environmental analysis.

C.B. Spencer,

Acting Secretary.

[FR Doc. 02–1087 Filed 1–15–02; 8:45 am]

BILLING CODE 6717–01–P

DEPARTMENT OF ENERGY

Federal Energy Regulatory Commission

Notice of Technical Conference

January 9, 2002.

In the matter of: Docket Nos. RM01–12–000, RT01–2–001, RT01–10–000, RT01–15–000, RT01–34–000, RT01–35–000, RT01–67–000, RT01–74–000, RT01–75–000, RT01–77–000, RT01–85–000, RT01–86–000, RT01–87–000, RT01–88–000, RT01–94–000, RT01–95–000, RT01–98–000, RT01–99–000, RT01–100–000, RT02–1–000, EL02–9–000; Electricity Market Design and Structure, PJM Interconnection, L.L.C., Allegheny Electric Cooperative, Inc., Atlantic City Electric Company, Baltimore Gas & Electric Company, Delmarva Power & Light Company, Jersey Central Power & Light Company, Metropolitan Edison Company, PECO Energy Company, Pennsylvania Electric Company, PPL Electric Utilities Corporation, Potomac Electric Power Company, Public Service Electric & Gas Company, UGI Utilities Inc., Allegheny Power, Avista Corporation, Montana Power Company, Nevada Power Company, Portland General Electric Company, Puget Sound Energy, Inc., Sierra Pacific Power Company, Southwest Power Pool, Inc., Avista Corporation, Bonneville Power Administration, Idaho Power Company, Montana Power Company, Nevada Power Company, PacifiCorp, Portland General Electric Company, Puget Sound Energy, Inc., Sierra Pacific Power Company, GridFlorida LLC, Florida Power & Light Company, Florida Power Corporation, Tampa Electric Company, Carolina Power & Light Company, Duke Energy Corporation, South Carolina Electric & Gas Company, GridSouth Transco, LLC, Entergy Services, Inc., Southern Company Services, Inc., California Independent System Operator Corporation, Bangor Hydro-Electric Company, Central Maine Power Company, National Grid USA, Northeast Utilities Service Company, The United Illuminating Company, Vermont Electric Power Company, ISO New England Inc., Midwest Independent System Operator, Alliance Companies, NSTAR Services Company, New York Independent System Operator, Inc., Central Hudson Gas & Electric Corporation, Consolidated Edison Company of New York, Inc. Niagara Mohawk Power Corporation, New York State Electric & Gas Corporation, Orange & Rockland Utilities, Inc., Rochester Gas & Electric Corporation, PJM Interconnection, L.L.C., Regional Transmission Organizations, Regional Transmission Organizations, Arizona Public Service Company, El Paso Electric Company, Public Service Company of New Mexico, Tucson Electric Power Company, WestConnect RTO, LLC.

Take notice that a technical conference will be held on January 22–23, 2002, from approximately 9:30 a.m. to 4:30 p.m., in a room to be designated at the offices of the Federal Energy Regulatory Commission, 888 First Street, NE., Washington, DC. The goals of the conference will be to gain a mutual understanding of similarities and differences between various market designs and to allow participants to provide further detail on market operations. Members of the Commission will attend the conference and participate in the discussions. All interested persons may attend.

The Commission is inviting selected panelists on these topics to participate in these workshops; it is not at this time entertaining requests to make presentations. There will be ample opportunity for non-panelists to submit comments in the above dockets. Additional details about the workshops will be provided in a subsequent notice, and will be posted on the Commission's web site under RTO Activities. For additional information about the conference, please contact Saida Shaalan at (202) 208–0278.

C.B. Spencer,

Acting Secretary.

[FR Doc. 02–1075 Filed 1–15–02; 8:45 am]

BILLING CODE 6717–01–P

ENVIRONMENTAL PROTECTION AGENCY

[OPP–341399D; FRL–6814–7]

Organophosphate Pesticides; Availability of Terbufos Interim Risk Management Decision Documents

AGENCY: Environmental Protection Agency (EPA).

ACTION: Notice.

SUMMARY: This notices announces the availability of the interim risk management decision document for terbufos. In addition, this notice starts a 60–day public participation period during which the public is encouraged to submit comments on the terbufos

interim risk management decision document. This decision document has been developed as part of the public participation process that EPA and the U.S. Department of Agriculture (USDA) are now using for involving the public in the reassessment of pesticide tolerances under the Food Quality Protection Act (FQPA), and the reregistration of individual organophosphate pesticides under the Federal Insecticide, Fungicide, and Rodenticide Act (FIFRA).

DATES: The interim risk management decision documents are available under docket control number OPP–341399D.

FOR FURTHER INFORMATION CONTACT: Eric Olson, Special Review and Reregistration Division (7508C), Office of Pesticide Programs, Environmental Protection Agency, 1200 Pennsylvania Ave., NW., Washington, DC 20460; telephone number: (703) 308–8067; e-mail address: olson.eric@gov.

SUPPLEMENTARY INFORMATION:

I. General Information

A. Does this Action Apply to Me?

This action is directed to the public in general, nevertheless, a wide range of stakeholders will be interested in obtaining the interim risk management decision documents for terbufos, including environmental, human health, and agricultural advocates; the chemical industry; pesticide users; and members of the public interested in the use of pesticides on food. Since other entities also may be interested, the Agency has not attempted to describe all the specific entities that may be affected by this action. If you have any questions regarding the applicability of this action to a particular entity, consult the person listed under **FOR FURTHER INFORMATION CONTACT**.

B. How Can I Get Additional Information, Including Copies of this Document and Other Related Documents?

1. *Electronically*. You may obtain electronic copies of this document, and certain other related documents that might be available electronically, from the EPA Internet Home Page at http://www.epa.gov/. On the Home Page select ''Laws and Regulations,'' ''Regulations and Proposed Rules,'' and then look up the entry for this document under the ''**Federal Register**—Environmental Documents.'' You can also go directly to the **Federal Register** listings at http://www.epa.gov/fedrgstr/. In addition, copies of the pesticide interim risk management decision documents released to the public may also be accessed at http://www.epa.gov/pesticides/reregistration/status.htm.

2. *In person*. The Agency has established an official record for this action under docket control number OPP–341399D. The official record consists of the documents specifically referenced in this action, and other information related to this action, including any information claimed as Confidential Business Information (CBI). This official record includes the documents that are physically located in the docket, as well as the documents that are referenced in those documents. The public version of the official record does not include any information claimed as CBI. The public version of the official record, which includes printed, paper versions of any electronic comments submitted during an applicable comment period is available for inspection in the Public Information and Records Integrity Branch (PIRIB), Rm. 119, Crystal Mall #2, 1921 Jefferson Davis Hwy., Arlington, VA, from 8:30 a.m. to 4 p.m., Monday through Friday, excluding legal holidays. The PIRIB telephone number is (703) 305–5805.

II. What Action is the Agency Taking?

EPA has assessed the risks of terbufos and reached an Interim Reregistration Eligibility Decision (IRED) for this organophosphate pesticide. Provided that risk mitigation measures are adopted, terbufos fits into its own risk cup its individual, aggregate risks are within acceptable levels. Used on corn, sorghum, and sugar beets, terbufos residues in food and drinking water do not pose risk concerns with the implementation of certain risk mitigation measures. Terbufos has no residential uses. With other risk reduction measures, worker and ecological risks also will be substantially reduced.

The interim risk management decision documents for terbufos were made through the organophosphate pesticide pilot public participation process, which increases transparency and maximizes stakeholder involvement in EPA's development of risk assessments and risk management decisions. The pilot public participation process was developed as part of the EPA-USDA Tolerance Reassessment Advisory Committee (TRAC), which was established in April 1998, as a subcommittee under the auspices of EPA's National Advisory Council for Environmental Policy and Technology. A goal of the pilot public participation process is to find a more effective way for the public to participate at critical junctures in the Agency's development of organophosphate pesticide risk assessments and risk management decisions. EPA and USDA began implementing this pilot process in August 1998, to increase transparency and opportunities for stakeholder consultation.

EPA worked extensively with affected parties to reach the decisions presented in the interim risk management decision documents, which conclude the pilot public participation process for terbufos. As part of the pilot public participation process, numerous opportunities for public comment were offered as these interim risk management decision documents were being developed. There will also be a 60–day comment period on the interim reregistration eligibility decision and the docket will remain open after this period for any comments submitted to the Agency.

The risk assessments for terbufos were released to the public through a notice published in the **Federal Register** of August 12, 1998 (63 FR 43175) (FRL–6024–5), and September 1, 1999 (64 FR 34195) (FRL–6099–9).

EPA's next step under FQPA is to complete a cumulative risk assessment and risk management decision for the organophosphate pesticides, which share a common mechanism of toxicity. The interim risk management decision documents on terbufos cannot be considered final until this cumulative assessment is complete. When the cumulative risk assessment for the organophosphate pesticides has been completed, EPA will issue its final tolerance reassessment decision(s) for terbufos and further risk mitigation measures may be needed.

List of Subjects

Environmental protection, Chemicals, Pesticides and pests.

Dated: January 4, 2002.

Lois A. Rossi,

Director, Special Review and Reregistration Division, Office of Pesticide Programs.

[FR Doc. 02–1121 Filed 1–15–02; 8:45 am]

BILLING CODE 6560–50–S

ENVIRONMENTAL PROTECTION AGENCY

[OPP–00658B; FRL–6814–3]

Pesticides; Guidance on Cumulative Risk Assessment of Pesticide Chemicals That Have a Common Mechanism of Toxicity

AGENCY: Environmental Protection Agency (EPA).

ACTION: Notice of availability.

SUMMARY: EPA announces the availability of the revised version of the pesticide science policy document entitled ''Guidance on Cumulative Risk Assessment of Pesticide Chemicals That Have a Common Mechanism of Toxicity.'' This notice is one in a series of science policy documents related to the implementation of the Federal Food, Drug, and Cosmetic Act (FFDCA), as amended by the Food Quality Protection Act of 1996 (FQPA).

FOR FURTHER INFORMATION CONTACT: Beth Doyle, Environmental Protection Agency (7503C), 1200 Pennsylvania Ave., NW., Washington, DC 20460; telephone number: (703) 305–2722; fax number: (703) 305–0871; e-mail address: doyle.elizabeth@epa.gov.

SUPPLEMENTARY INFORMATION:

I. General Information

A. Does this Action Apply to Me?

You may be potentially affected by this action if you manufacture or formulate pesticides. Potentially affected categories and entities may include, but are not limited to:

Categories	NAICS	Examples of potentially affected entities
Pesticide Producers	32532	Pesticide manufacturers Pesticide formulators

This listing is not intended to be exhaustive, but rather provides a guide for readers regarding entities likely to be affected by this action. Other types of entities not listed could also be affected. The North American Industrial Classification System (NAICS) codes have been provided to assist you and others in determining whether or not this notice affects certain entities. If you have any questions regarding the applicability of this action to a particular entity, consult the person listed under **FOR FURTHER INFORMATION CONTACT**.

B. How Can I Get Additional Information, Including Copies of this Document or Other Related Documents?

1. *Electronically*. You may obtain electronic copies of this document, the science policy documents, and certain other related documents that might be available from the Office of Pesticide Programs' Home Page at http://www.epa.gov/pesticides. On the Office of Pesticide Programs' Home Page select ''FQPA'' and then look up the entry for this document under ''Science Policies.'' You can also go directly to the listings at the EPA Home page at http://www.epa.gov. On the Home Page select ''Laws and Regulations,'' ''Regulations and Proposed Rules,'' and then look up the entry to this document under ''**Federal Register**—Environmental Documents.'' You can go directly to the **Federal Register** listings at http://www.epa.gov/fedrgstr.

2. *In person*. The Agency has established an official record for this action under docket control number OPP–00658B. In addition, the documents referenced in the framework notice, which published in the **Federal Register** on October 29, 1998 (63 FR 58038) (FRL–6041–5) under docket control number OPP–00557, are considered as part of the official record for this action under docket control number OPP–00658B even though not placed in the official record. The official record consists of the documents specifically referenced in this action, and other information related to this action, including any information claimed as Confidential Business Information (CBI). This official record includes the documents that are physically located in the docket, as well as the documents that are referenced in those documents. The public version of the official record does not include any information claimed as CBI. The public version of the official record, which includes printed, paper versions of any electronic comments submitted during an applicable comment period is available for inspection in the Public Information and Records Integrity Branch (PIRIB), Rm. 119, Crystal Mall #2, 1921 Jefferson Davis Hwy., Arlington, VA, from 8:30 a.m. to 4 p.m., Monday through Friday, excluding legal holidays. The PIRIB telephone number is (703) 305–5805.

II. Background Information

On August 3, 1996, FQPA was signed into law. The FQPA significantly amended the Federal Insecticide, Fungicide, and Rodenticide Act (FIFRA) and FFDCA. Among other changes, FQPA established a stringent health-based standard (''a reasonable certainty of no harm'') for pesticide residues in foods to assure protection from unacceptable pesticide exposure and strengthened health protections for infants and children from pesticide risks.

Thereafter, the Agency established the Food Safety Advisory Committee (FSAC) as a subcommittee of the National Advisory Council for Environmental Policy and Technology (NACEPT) to assist in soliciting input from stakeholders and to provide input to EPA on the broad policy choices facing the Agency and on strategic direction for the Office of Pesticide Programs (OPP). The Agency has used the interim approaches developed through discussions with FSAC to make regulatory decisions that meet the new FFDCA standard, but that could be revisited if additional information became available or as the science evolved. In addition, the Agency seeks independent review and public participation, generally through presentation of the science policy issues to the FIFRA Scientific Advisory Panel (SAP), a group of independent, outside experts who provide peer review and scientific advice to OPP.

During 1998 and 1999, EPA and the U.S. Department of Agriculture (USDA) established a second subcommittee of NACEPT, the Tolerance Reassessment Advisory Committee (TRAC) to address FFDCA issues and implementation. TRAC comprised more than 50 representatives of affected user, producer, consumer, public health, environmental, states, and other interested groups. The TRAC met from May 27, 1998, through April 29, 1999.

In order to continue the constructive discussions about FFDCA, EPA and USDA have established, under the auspices of NACEPT, the Committee to Advise on Reassessment and Transition (CARAT). The CARAT provides a forum for a broad spectrum of stakeholders to consult with and advise the Agency and the Secretary of Agriculture on pest and pesticide management transition issues related to the tolerance reassessment process. The CARAT is intended to further the valuable work initiated by the FSAC and TRAC toward the use of sound science and greater transparency in regulatory decisionmaking, increased stakeholder participation, and reasonable transition strategies that reduce risks without jeopardizing American agriculture and farm communities.

As a result of the 1998 and 1999 TRAC process, EPA decided that the implementation process and related policies would benefit from providing notice and comment on major science policy issues. The TRAC identified nine science policy areas it believed were key to implementation of tolerance reassessment. EPA agreed to provide one or more documents for comment on each of the nine issues by announcing their availability in the **Federal Register**. In a notice published in the **Federal Register** of October 29, 1998 (63 FR 58038) (FRL–6041–5), EPA described its intended approach. Since then, EPA has been issuing a series of draft documents concerning the nine science policy issues. This notice announces the availability of the revised science policy

document concerning cumulative risk assessment.

III. Summary of ''Guidance on Cumulative Risk Assessment of Pesticide Chemicals That Have a Common Mechanism of Toxicity''

In assessing the potential health risks associated with exposure to pesticides, attention has historically focused on single pathways of exposure (e.g., from pesticide residues in food, water, or residential/nonoccupational uses) for individual chemicals, and not on the potential for individuals to be exposed to multiple pesticides by all pathways concurrently. In 1996, FQPA modified FFDCA to require OPP to consider potential human health risks from all pathways of dietary and nondietary exposures to more than one pesticide acting through a common mechanism of toxicity. This document provides guidance to OPP scientists for evaluating and estimating the potential human risks associated with such multichemical and multipathway exposures to pesticides. This process is referred to as cumulative risk assessment.

The current guidance has been revised in light of review and comment offered by the public on an earlier draft version during the public comment period of June through September 2000 (USEPA, 2000a) (65 FR 40644, June 30, 2000 (FRL–6556–4) and 65 FR 50526, August 18, 2000 (FRL–6739–3)), by the SAP in September and December 1999, and by comments offered by other external parties at the SAP meetings. Furthermore, OPP has gained experience in applying the principles of the draft guidance itself with actual datasets on pesticides that share a common mechanism of toxicity. A pilot analysis was presented to the SAP on 24 organophosphorus pesticides illustrating the hazard and dose-response guidance in September 2000, and on the exposure assessment and risk characterization process in December 2000. The SAP comments on this pilot analysis have also led to refinements in the process of conducting cumulative risk assessments.

Cumulative risk assessments will play a significant role in the evaluation of risks posed by pesticides, and will enable OPP to make regulatory decisions that more fully protect public health and sensitive subpopulations, including infants and children. The cumulative assessment of risks posed by exposure to multiple chemicals by multiple pathways (including food, drinking water, and residential/nonoccupational exposure to air, soil, grass, and indoor surfaces) presents a formidable challenge for OPP. This guidance takes into account the knowledge and methods available now for assessing cumulative risk, and provides flexibility for addressing a variety of data situations. Because methods and knowledge are expected to continue to evolve in this area, OPP will update specific procedures with peer-reviewed supplementary technical documentation as needed. Further revision of the guidance itself will take place when extensive changes are necessary.

Before undertaking a cumulative risk assessment on pesticides sharing a common mechanism of toxicity, OPP will typically perform an aggregate risk assessment for each chemical in the common-mechanism group. When conducting aggregate assessments, OPP will follow the guidance described in the document entitled ''Guidance for Performing Aggregate Exposure and Risk Assessments'' (USEPA, 1999b), dated November 16, 2001 (66 FR 59428, November 28, 2001) (FRL–6792–8). Using this guidance, OPP will simultaneously consider the exposures from food, drinking water, and residential/non-occupational uses of each pesticide. When the aggregate risk assessments are completed for individual chemicals that share a common mechanism of toxicity, OPP will perform the cumulative risk assessment in the steps summarized below.

A cumulative risk assessment begins with the identification of a group of chemicals, a common mechanism group (CMG), that induce a common toxic effect by a common mechanism of toxicity. OPP will follow the framework for identifying the chemicals that belong in that group (see ''Guidance for Identifying Pesticide Chemicals and Other Substances That Have a Common Mechanism of Toxicity,'' USEPA, 1999a (64 FR 5796, February 5, 1999) (FRL–6060–7)). Once a CMG has been established, the next step is to evaluate registered and proposed uses for each CMG member in order to identify potential exposure pathways (i.e., food, drinking water, residential) and routes (i.e., oral, inhalation, dermal). During the hazard characterization phase, the various endpoints associated with the common mechanism of toxicity are identified, as well as the test species/sex that might serve as a uniform basis for determining relative potencies among the chemicals of interest. The common effect is also evaluated to determine if it is expressed across all exposure routes and durations of interest for each CMG member. The temporal aspects (e.g., time to peak effects, time to recovery) of the common mechanism toxicity are characterized to determine the critical window of its expression.

Not all cumulative assessments need to be of the same depth and scope. Thus, early in the cumulative assessment process, it is important to determine the need for, or the capability to perform, a comprehensive risk assessment. This is done by considering the number and types of possible exposure scenarios in conjunction with the associated residue values available. Initial toxicological and exposure information is collected. A screening-level assessment may be conducted that applies more conservative approaches than would a comprehensive and refined cumulative risk assessment. For example, margins of exposure may be based on no-observed adverse-effect-levels (NOAELs) for the common toxic effect rather than modeling dose-response curves of each chemical member to derive more refined relative potencies and points of departures. For dietary food risk, treatment of 100% of crops is assumed for each CMG chemical registered for use on a crop. Tolerance-level residues for the exposure component of the assessment may be assumed, rather than producing a refined estimate of actual residue levels from monitoring. If a screening-level analysis including such overestimates of exposure indicates that there is no risk concern, then no further detailed assessment may be necessary. But if this conservative approach indicates a potential for unacceptable risk, then a refined assessment should be conducted. This may engender the need for additional data.

As the risk assessor proceeds with the cumulative assessment, it is important to determine candidate chemicals and uses, routes, and pathways from the CMG that may cause cumulative effects. Cumulative assessments should not attempt to quantify risk resulting from those common-mechanism chemicals that will have a minimal toxic contribution to the cumulative hazard, or from minor exposure pathways, routes, or uses.

Exposures from minor pathways should be considered qualitatively. Thus, a subset of common-mechanism chemicals to be included in the quantification of cumulative risk needs to be identified from the CMG. This subgroup is called the cumulative assessment group (CAG). The identification of the CAG is done throughout the process as a detailed understanding of each group member's hazard and exposure potential emerges from the analysis. Although a

chemical(s) may be removed from the quantification of risk, the rationale for such decisions will be explained. Thus, all chemicals that were grouped by a common mechanism of toxicity will be accounted for (qualitatively or quantitatively) in the final assessment.

OPP will use dose addition for determining the combined risk of the CAG. This approach is consistent with the Agency's approach to multichemical assessments that involve chemicals that are toxicologically similar and share a common toxic effect. OPP will depart from the dose-addition approach if there are data available to support an alternative method. A dose-response analysis is performed on each CAG member to determine its toxic potency for the common toxic effect. The determination of toxic potency should, to the extent feasible with available data, be conducted on a uniform basis (i.e., same measure of potency, for the same effect, from the same test species/sex using studies of comparable methodology).

Once the toxic potency of each common-mechanism chemical is determined, the relative potencies of the CAG members are established. To determine relative potency, a chemical from the CAG is selected to serve as the index chemical. The index chemical is used as the point of reference for standardizing the common toxicity of the other chemical members of the CAG. Once the index chemical is selected, relative potency factors (RPFs) are calculated (i.e., the ratio of the toxic potency of a given chemical relative to that of the index chemical). RPFs are used to convert exposures of all chemicals in the CAG into exposure equivalents of the index chemical. Given that the RPF method portrays risk as exposure equivalents to one chemical (the index compound), it is preferred that index chemical (1) have high-quality dose-response data, (2) have a toxicological/biological profile for the common toxicity that is representative of the common toxic effect(s), and (3) be well characterized for the common mechanism of toxicity. The last step in the dose-response assessment is to calculate a point of departure(s) for the index chemical so that the risk of the CAG can be extrapolated to anticipated human exposures.

Detailed exposure scenarios for all of the uses remaining for each pesticide in the CAG must be developed. This includes determination of potential human exposures by all relevant pathways, durations, and routes that may allow simultaneous exposures, or any sequential exposures among the CAG members that could contribute to the same joint risk of the common toxic effect (i.e., either by overlapping internal doses or by overlapping toxic effects). The framework for estimating combined exposures is based on exposure to individuals, representing differing attributes of the population (e.g., human activity patterns, place of residence, age) that link pathways/route of exposure through scenario building. Cumulative risk values for a given common toxic effect are calculated separately for each exposure route and duration and then combined. To the extent data permit, the temporal and spatial linkages should be maintained for the many factors defining a possible individual exposure. A decision must be made on the relative importance of scenarios and the need for their inclusion in a quantitative assessment, as well as on the populations of interest and locations for evaluation in the assessment. The potential for co-occurrence of possible exposure scenarios is evaluated. Spatial, temporal, and demographic considerations are major factors in determining whether a concurrent exposure is likely to occur. In other words, all exposure events need to occur over a specific interval of time; events need to agree in time, place, and demographic characteristics; and an individual's dose needs to be matched with relevant toxicological values in terms of route and duration.

Exposure input parameters must be established. The magnitude, frequency, and duration for all pertinent exposure pathway/route combinations are determined, and appropriate sources of use/usage information, residues in all appropriate media, and any modifying factors necessary for inclusion in the assessment are identified. Where necessary, any appropriate surrogate datasets from other chemical-specific data, published literature, or generic datasets are identified. A trial run of a quantitative cumulative risk is conducted by assigning route-specific and duration-specific risk metrics. The outputs of this trial run are evaluated and a sensitivity analysis is conducted. Subpopulations of concern are assessed.

The last step of the assessment process is to characterize the risk. The results and conclusions of the cumulative risk analysis are clearly described, including the relative confidence in toxicity and exposure data sources and model inputs. The risk characterization also includes a description of the variability. Major areas of uncertainty are described both qualitatively and quantitatively. The magnitude and direction of likely bias and the impact on the final assessment are discussed. Risk contributors are identified with regard to pesticide(s), pathway, source, time of year, and impacted subpopulation (with particular attention to children). The basis for group uncertainty and FQPA safety factors is explained.

In the event that a cumulative risk assessment indicates that there may be risks of concern, OPP would need to develop risk mitigation measures and take appropriate regulatory actions. OPP notes that the Cumulative Risk Assessment Guidance document does not address the process used to decide on the need for or the choice of risk mitigation measures. It may be possible to address risk concerns through mitigation measures that do not significantly change the use of a pesticide (e.g. reducing application rates or changing the timing or manner of application). In other cases, however, OPP acknowledges that regulatory measures, that reduce or eliminate pesticide uses, may be necessary and may result in the use of other pesticides or alternative pest control practices, which may have their own risks and benefits. While beyond the scope of this science policy document, OPP also recognizes that it is important to consider potential risks and benefits of such substitutes and alternatives to ensure that decisions do not increase net risk, transfer risk unreasonably, and fail to preserve important benefits wherever possible. Such consideration would be an important part in designing mitigation options for aggregate risk assessments for individual chemicals and for cumulative risk assessments for chemicals sharing a common mechanism of toxicity. The consideration of the risks and benefits of alternatives would contribute to an understanding of whether adoption of a possible risk mitigation measure might actually result in increased risks. When alternative means of reducing risk exist, OPP intends that the risk management decisions appropriately take into account which of the mitigation measures achieves the necessary reduction in risk in the most efficient manner, i.e., the manner that has the highest societal benefits. Accordingly, OPP will produce an analysis of alternatives when developing risk reduction options so that the net societal risk and net societal benefits for the options can be estimated. This analysis will enable risk managers to assure that there are not significant risk transfers and uses with important benefits are maintained, to the extent possible.

OPP is interested in understanding the views of the public on these issues—

both in the context of making regulatory decisions on specific pesticides and more broadly. OPP's ongoing process of public participation in individual pesticide tolerance reassessment decisions affords ample opportunity for interested stakeholders to comment on these issues as they may affect individual chemicals, classes of chemicals, and the transfer of risks and benefits. In addition, OPP intends to seek public input on broader methodological aspects of these issues through its existing federal advisory committee, the Committee to Advise on Reassessment and Transition, and/or through other avenues that give the public an opportunity to comment. OPP intends to make publicly available the comments received, and to use an open and participatory process to discuss the analysis, methods, and scientific considerations the Agency may use when characterizing changes in net risk, and effects of any transfer of risk and benefits associated with mitigation options.

IV. Policies Not Rules

The policy document discussed in this notice is intended to provide guidance to EPA personnel and decision-makers, and to the public. As a guidance document and not a rule, the policy in this guidance is not binding on either EPA or any outside parties. Although this guidance provides a starting point for EPA risk assessments, EPA will depart from its policy where the facts or circumstances warrant. In such cases, EPA will explain why a different course was taken. Similarly, outside parties remain free to assert that a policy is not appropriate for a specific pesticide or that the circumstances surrounding a specific risk assessment demonstrate that a policy should not be applied.

List of Subjects

Environmental protection, Administrative practice and procedure, Agricultural commodities, Pesticides and pests.

Dated: January 8, 2002.

Stephen Johnson,

Assistant Administrator for Prevention, Pesticides and Toxic Substances.

[FR Doc. 02–959 Filed 1–15–02; 8:45 am]

BILLING CODE 6580–50–S

FEDERAL RESERVE SYSTEM

Sunshine Act Meeting

AGENCY HOLDING THE MEETING: Board of Governors of the Federal Reserve System.

TIME AND DATE: 11 a.m., Tuesday, January 22, 2002.

PLACE: Marriner S. Eccles Federal Reserve Board Building, 20th and C Streets, NW., Washington, DC 20551.

STATUS: Closed.

MATTERS TO BE CONSIDERED:

1.Personnel actions (appointments, promotions, assignments, reassignments, and salary actions) involving individual Federal Reserve System employees.

2. Any items carried forward from a previously announced meeting.

CONTACT PERSON FOR MORE INFORMATION: Michelle A. Smith, Senior Advisor to the Board; 202–452–3204.

SUPPLEMENTARY INFORMATION: You may call 202–452–3206 beginning at approximately 5 p.m. two business days before the meeting for a recorded announcement of bank and bank holding company applications scheduled for the meeting; or you may contact the Board's Web site at http://www.federalreserve.gov for an electronic announcement that not only lists applications, but also indicates procedural and other information about the meeting.

Dated: January 14, 2002.

Robert deV. Frierson,

Deputy Secretary of the Board.

[FR Doc. 02–1279 Filed 1–14–02; 2:54 pm]

BILLING CODE 6210–01–P

GENERAL SERVICES ADMINISTRATION

[OMB Control No. 3090–0086]

Submission for OMB Review and Extension GSA Form 1364, Proposal To Lease Space (Not Required by Regulation)

AGENCY: General Services Administration (GSA).

ACTION: Notice of a request for an extension to an existing OMB clearance.

SUMMARY: Under the provisions of the Paperwork Reduction Act of 1995 (44 U.S.C. chapter 35), the General Services Administration (GSA) Regulatory Secretariat requested in August 2001 that the Office of Management and Budget (OMB) reinstate an information collection that pertains to GSA Form 1364, Proposal to Lease Space (not Required by Regulation). OMB reinstated the collection on August 24, 2001. Information collected under this authority is not otherwise required by regulation.

Public comments are particularly invited on: Whether the GSA Form 1364, Proposal to Lease space, is necessary to conduct a proper analysis of leasing proposals prior to awarding leasing contracts, and whether it will have practical utility; whether our estimate of the public burden of this collection of information is accurate, and based on valid assumptions and methodology; ways to enhance the quality, utility, and clarity of the information to be collected; and ways in which we can minimize the burden of the collection of information on those who are to respond, through the use of appropriate technological collection techniques or other forms of information technology. A request for public comments was published at 66 FR 52769, October 17, 2001. No comments were received.

DATES: Submit comments on or before February 15, 2002.

FOR FURTHER INFORMATION CONTACT: Julia Wise, Acquisition Policy Division, GSA (202) 208–1168.

ADDRESSES: Comments regarding this burden estimate or any other aspect of this collection of information, including suggestions for reducing this burden, should be submitted to: Ed springer, GSA Desk Officer, OMB, Room 10236, NEOB, Washington, DC 20503, and a copy to Stephanie Morris General services Administration, Regulatory Secretariat, 1800 F Street, NW., Room 4035, Washington, DC 20405.

SUPPLEMENTARY INFORMATION:

A. Purpose

The General Services Administration (GSA) has various mission responsibilities related to the acquisition and provision of real property management, and disposal of real and personal property. These mission responsibilities generate requirements that are realized through the solicitation and award of leasing contracts. Individual solicitations and resulting contracts may impose unique information collection/reporting requirements on contractors, not required by regulation, but necessary to evaluate particular program accomplishments and measure success in meeting program objectives.

B. Annual Reporting Burden

Respondents: 5016.
Responses Per Respondent: 1.
Total Responses: 5,016.

Total Burden Hours: 25,183.

Obtaining Copies of Proposals

Requester may obtain a copy of the proposal from the General Services Administration, Regulatory Secretariat (MVP), 1800 F Street, NW., Room 4035, Washington, DC 20405, telephone (202) 501–4744. Please cite OMB Control No. 3090–0086, GSA Form 1364, Proposal to Lease Space (Not Required by Regulation), in all correspondence.

Dated: January 10, 2002.

Michael W. Carleton,

Chief Information Officer (I).

[FR Doc. 02–1107 Filed 1–15–02; 8:45 am]

BILLING CODE 6820–34–M

OFFICE OF GOVERNMENT ETHICS

Submission for OMB Review; Comment Request: Updated Qualified Trust Model Certificates and Model Trust Documents

AGENCY: Office of Government Ethics (OGE).

ACTION: Notice.

SUMMARY: The Office of Government Ethics has submitted the proposed updated executive branch qualified trust model certificates and draft documents to the Office of Management and Budget (OMB) for for review and three-year extension of approval under the Paperwork Reduction Act. A total of twelve OGE model certificates and documents are involved.

DATES: Comments by the public and agencies on this information collection as proposed for revision should be received by February 15, 2002.

ADDRESSES: Comments should be sent to Joseph F. Lackey, Jr., Office of Information and Regulatory Affairs, Office of Management and Budget, New Executive Office Building, Room 10235, Washington, DC 20503; Telephone: 202–395–7316.

FOR FURTHER INFORMATION CONTACT: Mary T. Donovan at the U.S. Office of Government Ethics; Telephone: 202–208–8000, ext. 1185; TDD 202–208–8025; FAX 202–208–8038. Copies of the executive branch qualified trust model certificates and documents may be obtained, without charge, by contacting Ms. Donovan.

SUPPLEMENTARY INFORMATION: The Office of Government Ethics is the supervising ethics office for the executive branch of the Federal Presidential nominees to executive branch positions subject to Senate confirmation and any other executive branch officials may seek OGE approval for Ethics Act qualified blind or diversified trusts to be used to avoid conflicts of interest.

The Office of Government Ethics is the sponsoring agency for the model certificates and model trust documents for qualified blind and diversified trusts of executive branch officials set up under section 102(f) of the Ethics Act, 5 U.S.C. app. § 102(f), and OGE's implementing financial disclosure regulations at subpart D of 5 CFR part 2634. The various model certificates and model trust documents are utilized by OGE and settlors, trustees and other fiduciaries in establishing and administering these qualified trusts.

On July 3, 2001, OGE issued its first round **Federal Register** notice to announce its forthcoming request to OMB for paperwork renewal of the updated qualified trust model certificates and model trust documents. See 66 FR 35243–35244, with comments due by September 17, 2001. (OGE did not receive any comments or requests for copies of the updated qualified trust model certificates and model trust documents.) In that notice, and this one, OGE has proposed a minor change to the qualified trust model documents. The Office of Government Ethics has proposed to substitute the words ''mailing address'' for the words ''home address'' where they appear within the model trust documents. The proposed change is a minor improvement that will enhance privacy with respect to trust instruments once executed. No change is needed for the model certificates of independence and compliance as codified at appendices A–C to 5 CFR part 2634.

The Office of Government Ethics has submitted updated versions of all twelve qualified trust certificates and model documents described below (all of which are included under OMB paperwork control number 3209–0007, currently cleared through the end of January 2002) for a three-year extension of approval by OMB under the Paperwork Reduction Act (44 U.S.C. chapter 35).

There are two categories of information collection requirements, each with its own related reporting model certificates or model trust documents which are subject to paperwork review and approval by OMB. The OGE regulatory citations for these two categories, together with identification of the forms used for their implementation, are as follows:

i. Qualified trust certifications—5 CFR 2634.401(d)(2), 2634.403(b)(11), 2634.404(c)(11), 2634.406(a)(3) & (b), 2634.408, 2634.409 and appendixes A & B to part 2634 (the two implementing forms, the Certificate of Independence and Certificate of Compliance, are codified respectively in the cited appendixes; see also the Privacy Act and Paperwork Reduction Act notices thereto in appendix C); and

ii. Qualified trust communications and model provisions and agreements—5 CFR 2634.401(c)(1)(i) & (d)(2), 2634.403(b), 2634.404(c), 2634.408 and 2634.409 (the ten implementing forms are the: (A) Blind Trust Communications (Expedited Procedure for Securing Approval of Proposed Communications); (B) Model Qualified Blind Trust Provisions; (C) Model Qualified Diversified Trust Provisions; (D) Model Qualified Blind Trust Provisions (For Use in the Case of Multiple Fiduciaries); (E) Model Qualified Blind Trust Provisions (For Use in the Case of an Irrevocable Pre-Existing Trust); (F) Model Qualified Diversified Trust Provisions (Hybrid Version); (G) Model Qualified Diversified Trust Provisions (For Use in the Case of Multiple Fiduciaries); (H) Model Qualified Diversified Trust Provisions (For Use in the Case of an Irrevocable Pre-Existing Trust); (I) Model Confidentiality Agreement Provisions (For Use in the Case of a Privately Owned Business); and (J) Model Confidentiality Agreement Provisions (For Use in the Case of Investment Management Activities)).

The various model trust certificates and model trust documents as proposed to be modified are available without charge to the public upon request as indicated in the ''For Further Information Contact'' section above.

The communications formats and the confidentiality agreements (items ii (A), (I) and (J) above) would not be available to the public because they contain sensitive, confidential information. All the other completed model trust certificates and model trust documents (except for any trust provisions that relate to the testamentary disposition of trust assets) are publicly available based upon a proper Ethics Act request (by filling out an OGE Form 201 access form).

The total annual public reporting burden represents the time involved for completing qualified trust certificates and model trust documents which are processed by OGE. The burden is based on the amount of time imposed on private citizens. Virtually all filers/document users are private trust administrators and other private representatives who help to set up and maintain the qualified blind and diversified trusts. The detailed paperwork estimates below for the various trust certificates and model trust documents, which remain the same as

for the last paperwork clearance three years ago, are based primarily on OGE's experience with administration of the qualified trust program.

i. Trust Certificates

A. *Certificate of Independence:* Total filers (executive branch): 10; Private citizen filers (100%): 10; OGE-processed certificates (private citizens): 10; OGE burden hours (20 minutes/certificate): 3.

B. *Certificate of Compliance:* Total filers (executive branch): 35; Private citizen filers (100%): 35; OGE-processed certificates (private citizens): 35; OGE burden hours (20 minutes/certificate): 12; and

ii. Model Qualified Trust Documents

A. *Blind Trust Communications:* Total Users (executive branch): 35; Private citizen users (100%): 35; OGE-processed documents (private citizens): 210 (based on an average of six communications per user, per year); OGE burden hours (20 minutes/communication): 70.

B. *Model Qualified Blind Trust:* Total Users (executive branch): 10; Private citizen users (100%): 10; OGE-processed models (private citizens): 10; OGE burden hours (100 hours/model): 1,000.

C. *Model Qualified Diversified Trust:* Total users (executive branch): 15; Private citizen users (100%): 15; OGE-processed models (private citizens): 15; OGE burden hours (100 hours/model): 1,500.

D.–H. *Each of the five remaining model qualified trust documents:* Total users (executive branch): 2; Private citizen users (100%): 2; OGE-processed models (private citizens): 2, multiplied by 5 (five different models) = 10; OGE burden hours (100 hours/model): 200, multiplied by 5 (five different models) = 1,000.

I.–J. *Each of the two model confidentiality agreements:* Total users (executive branch): 2; Private citizens users (100%): 2; OGE-processed agreements (private citizens): 2, multiplied by 2 (two different models) = 4; OGE burden hours (50 hours/agreement): 100, multiplied by 2 (two different models) = 200.

Based on these estimates, the total number of forms expected annually at OGE remains unchanged at 294 with a cumulative total of 3,785 burden hours.

In this second round notice, public comment is again invited on all aspects of OGE's qualified trust model certificates and model trust documents as proposed for renewal with minor revision, including specifically views on: the accuracy of OGE's public burden estimate; the potential for enhancement of quality, utility, and clarity of the information to be collected; and the minimization of burden (including the possibility of use of information technology). The Office of Government Ethics, in consultation with OMB, will consider all comments received, which will become a matter of public record.

Approved: January 10, 2002.

Amy L. Comstock,

Director, Office of Government Ethics.

[FR Doc. 02–1144 Filed 1–15–02; 8:45 am]

BILLING CODE 6345–01–P

DEPARTMENT OF HEALTH AND HUMAN SERVICES

Centers for Disease Control and Prevention

[30DAY–13–02]

Agency Forms Undergoing Paperwork Reduction Act Review

The Centers for Disease Control and Prevention (CDC) publishes a list of information collection requests under review by the Office of Management and Budget (OMB) in compliance with the Paperwork Reduction Act (44 U.S.C. chapter 35). To request a copy of these requests, call the CDC Reports Clearance Officer at (404) 639–7090. Send written comments to CDC, Desk Officer, Human Resources and Housing Branch, New Executive Office Building, Room 10235, Washington, DC 20503. Written comments should be received within 30 days of this notice.

Proposed Project

Evaluation of Effectiveness of NIOSH Publications—NEW—National Institute for Occupational Safety and Health (NIOSH), Centers for Disease Control and Prevention (CDC). Through the development, organization, and dissemination of information, NIOSH promotes awareness about occupational hazards and their control, and improves the quality of American working life. Although NIOSH uses a variety of media and delivery mechanisms to communicate with its constituents, one of the primary vehicles is through the distribution of NIOSH-numbered publications. The extent to which these publications successfully meet the information needs of their intended audience is not currently known. In a period of diminishing resources and increasing accountability, it is important that NIOSH be able to demonstrate that communications about its research and service programs are both effective and efficient in influencing workplace change. This requires a social marketing evaluation of NIOSH products to measure the degree of customer satisfaction and their adoption of recommended actions.

The present project proposes to do this by conducting a mail survey of a primary segment of NIOSH's customer base, the community of occupational safety and health professionals. In collaboration with the American Association of Occupational Health Nurses (13,000 members), the American Industrial Hygiene Association (12,400 members), the American College of Occupational and Environmental Medicine (6,500 members), and the American Society of Safety Engineers (33,000 members), NIOSH will survey a sample of their memberships to ascertain, among other things: (1) Their perceptions and attitudes toward NIOSH as a general information resource; (2) their perceptions and attitudes about specific types of NIOSH publications (*e.g.*, criteria documents, technical reports, alerts); (3) the frequency and nature of referral to NIOSH in affecting occupational safety and health practices and policies; (4) the extent to which they have implemented NIOSH recommendations; and (5) their recommendations for improving NIOSH products and delivery systems. The results of this survey will provide an empirical assessment of the impact of NIOSH publications on occupational safety and health practice and policy in the United States as well as provide direction for shaping future NIOSH communication efforts. The annual burden for this data collection is 400 hours.

Respondents	No. of responses/ respondents	Average burden per response
1,200	1	20/60

Dated: January 8, 2002.

Nancy E. Cheal,

Acting Associate Director for Policy, Planning and Evaluation, Centers for Disease Control and Prevention.

[FR Doc. 02–1053 Filed 1–15–02; 8:45 am]

BILLING CODE 4163–18–P

DEPARTMENT OF HEALTH AND HUMAN SERVICES

Centers for Medicare & Medicaid Services

Privacy Act of 1974; Report of New System

AGENCY: Department of Health and Human Services (HHS), Centers for Medicare & Medicaid Services (CMS) (formerly the Health Care Financing Administration).

ACTION: Notice of new system of records (SOR).

SUMMARY: In accordance with the requirements of the Privacy Act of 1974, we are proposing to establish a new system of records (SOR), called the ''Evaluations of The Medicaid Reform Demonstrations (EMRD),'' HHS/CMS/OSP No. 09–70–0068. The primary purpose of this SOR is to collect and provide data necessary to evaluate a series of Medicaid Reform Demonstrations that rely on waivers of section 1115 of the Social Security Act. This system will allow measurement of the effects of the demonstration on beneficiaries eligibility, access to care, utilization, health care costs, satisfaction with care, quality of care and health status. The information retrieved from this SOR will be used: (1) To support program administration, reporting, and regulatory, reimbursement, and policy functions performed within the CMS or by a contractor or consultant; (2) to enable another Federal or State Agency to contribute to the accuracy of the CMS's proper payment of Medicaid, State Children's Health Insurance Program and Medicare benefits; (3) to enable CMS to administer a Federal health benefits program or to enable CMS to fulfill a requirement of a Federal statute or regulation that implements a health benefits program funded in whole or in part with Federal funds; (4) to support constituent requests made by a Congressional representative; (5) to support litigation involving the Agency; (6) to support program administration, reporting, research, evaluation, and related issues; (7) and to disclose individual-specific information for the purpose of combating fraud and abuse in health benefits programs administered by CMS. We have provided background information about the proposed system in the **SUPPLEMENTARY INFORMATION** section below. Although the Privacy Act requires only that the ''routine use'' portion of the system be published for comment, CMS invites comments on all portions of this notice. *See* **EFFECTIVE DATES** section for comment period.

EFFECTIVE DATES: CMS filed a new system report with the Chair of the House Committee on Government Reform and Oversight, the Chair of the Senate Committee on Governmental Affairs, and the Administrator, Office of Information and Regulatory Affairs, Office of Management and Budget (OMB) on January 4, 2002. In any event, we will not disclose any information under a routine use until 40 days after publication. We may defer implementation of this system of records or one or more of the routine use statements listed below if we receive comments that persuade us to defer implementation.

ADDRESSES: The public should address comments to: Director, Division of Data Liaison and Distribution (DDLD), CMS, Room N2–04–27, 7500 Security Boulevard, Baltimore, Maryland 21244–1850. Comments received will be available for review at this location, by appointment, during regular business hours, Monday through Friday from 9 a.m.–3 p.m., eastern time zone.

FOR FURTHER INFORMATION CONTACT: Sydney Galloway, Office of Strategic Planning, Centers for Medicare & Medicaid Services, 7500 Security Boulevard, Baltimore, Maryland 21244–1850. The telephone number is 410–786–6645.

SUPPLEMENTARY INFORMATION:

I. Description of the New System of Records

A. Statutory and Regulatory Basis for System of Records

CMS proposes to initiate a new SORs collecting data under the authority of section 1875(a) (42 U.S.C. 1395ll) and section 1115 (42 U.S.C. 1315) of the Social Security Act. The EMRD SOR will provide data necessary to evaluate CMS's Evaluations of the Medicaid Reform Demonstrations. As part of this effort, individually identifiable data will be used to analyze the effects of the demonstration on beneficiary eligibility, access to care, utilization, health care costs, satisfaction with care, quality of care, and health status. The information retrieved from this SOR will be used: (1) To support program administration, reporting, and regulatory, reimbursement, and policy functions performed within the Centers for Medicare & Medicaid Services (CMS) or by a contractor or consultant; (2) to enable another Federal or State agency to contribute to the accuracy of the CMS's proper payment of Medicaid, State Children's Health Insurance Program and Medicare benefits; (3) to enable CMS to administer a Federal health benefits program or to enable CMS to fulfill a requirement of a Federal statute or regulation that implements a health benefits program funded in whole or in part with Federal funds; (4) to support constituent requests made by a Congressional representative; (5) to support litigation involving the Agency; (6) to support program administration, reporting, research, evaluation, and related issues; (7) and to disclose individual-specific information for the purpose of combating fraud and abuse in health benefits programs administered by CMS.

B. Background

As of September 1, 1999, 21 section 1115 waivers for demonstrations in the following States have been approved and implemented: Alabama (Mobile County only), Arizona, Arkansas, California (Los Angeles County only), Delaware, District of Columbia, Florida, Hawaii, Kentucky, Maryland, Massachusetts, Minnesota, New Jersey, New York, Ohio, Oklahoma, Oregon, Rhode Island, Tennessee, Vermont and Wisconsin.

CMS has awarded a number of contracts to independent evaluators to assess the demonstrations thus far. These evaluations include:

Evaluation of the State Health Reform Demonstrations (Contract Number 500–94–0047)—Awarded to prime contractor Mathematica Policy Research, Inc. and subcontractors.

Examines the impact of five State Medicaid reform demonstrations (Hawaii, Maryland, Oklahoma, Rhode Island, and Tennessee).

Evaluation of the Medicaid Health Reform Demonstrations (Contract Number 500–95–0040) Awarded to Urban Institute and its subcontractors.

Examines five health reform demonstrations (California (Los Angeles County only), Kentucky, Minnesota, New York, and Vermont).

Evaluation of the Oregon Medicaid Reform Demonstration (Contract Number 500–94–0056)—Awarded to Health Economics Research, Inc. and subcontractors.

Examines the impacts of the Oregon Medicaid Reform Demonstration.

Evaluation of Delaware's Diamond State Health Plan (500–92–0033 Delivery Order Nos. 1 and 4)—Awarded to Research Triangle Institute and subcontractors.

Examines the impacts of the Delaware demonstration, with particular emphasis on children, including children with special health care needs.

Evaluation of Mass Health Quality Improvement Plan and Insurance Reimbursement Program (Contract Number 500–95–0058/T.O. #9)—Awarded to Health Economics Research, Inc. and subcontractors.

The evaluation will consist of two parts: (1) A case study of the quality improvement process in Medicaid MCOs and PCCs; (2) A case study of the implementation of the Insurance Reimbursement Program for low-income families.

Evaluation of the District of Columbia's Demonstration Project, ''Managed Care System for Disabled and

Special Needs Children'' (Contract Number 500–96–0003)—Awarded to Abt Associates, Inc. and subcontractors.

The goal of this project is to document and analyze the experiences of the District of Columbia's managed care system for children and adolescents under the age of 22 who are eligible for Medicaid and who are considered disabled according to Supplemental Security Income (SSI) Program guidelines.

Focused Evaluation of Ohio Section 1115 State Health Reform Demonstration: Behavioral Health (Contract Number 500–97–0022)—Awarded to Heath Economics Research, Inc. and subcontractors.

This evaluation will consist of the following two components: (1) A focused evaluation of the behavioral health component of OhioCare, Ohio's section 1115 State health reform demonstration; and (2) A case study of the implementation of OhioCare.

Additional contracts will be awarded to evaluate other demonstrations as they are approved.

1. Each evaluation conducts analyses to answer the following broad questions for participants, individuals, employers or other relevant parties; or nonparticipant comparison populations from the pre-demonstration period, during the demonstration, and post-demonstration period.

2. How were the demonstrations implemented, and what processes were put in place to administer them. Are these processes effective?

3. What are the impacts of the demonstrations on eligibility and access to care?

4. What are the demonstrations' impacts on quality, including health status impacts, the process of care delivered, and satisfaction with care received?

5. What are the impacts of the demonstrations on the utilization of services?

6. What are the impacts of the demonstrations on cost, from Federal, State, provider, employer, and beneficiary perspectives?

As part of these efforts, the contractors will use individually identifiable data from state administrative data bases (including, but not, limited to, Medicaid eligibility, claims and encounter data), CMS data bases, data from other Federal and State agencies (including, but not limited to, the Social Security Administration), and other relevant data bases, surveys and vital records to analyze the effects of the demonstration on beneficiary eligibility, access to care, health care costs, satisfaction with care, and health status. CMS and the contractor will collect only that information necessary to perform the system's function.

II. Collection and Maintenance of Data in the System

A. Scope of the Data Collected

The SOR is expected to include data on the number and type of services used by demonstration participants and comparison group members and their experiences in accessing health care before, during, and after the demonstration period. Sources of information contained in this records system are expected to include: State Medicaid Management Information Systems, managed care organizations (i.e., encounter data), fee-for-service providers, surveys of demonstration participants or providers and comparison group members, medical records, Social Security Administration data bases, vital statistics, and other relevant data systems.

B. Agency Policies, Procedures, and Restrictions on the Routine Use

The Privacy Act permits us to disclose information without an individual's consent if the information is to be used for a purpose that is compatible with the purpose(s) for which the information was collected. Any such disclosure of data is known as a ''routine use.'' The government will only release EMRD information that can be associated with an individual patient as provided for under ''Section III. Entities Who May Receive Disclosures Under Routine Use.'' Both identifiable and non-identifiable data may be disclosed under a routine use. Identifiable data includes individual records with EMRD information and identifiers. Non-identifiable data includes individual records with EMRD information and masked identifiers or EMRD information with identifiers stripped out of the file.

We will only disclose the minimum personal data necessary to achieve the purpose of the EMRD. CMS has the following policies and procedures concerning disclosures of information that will be maintained in the system. In general, disclosure of information from the SOR will be approved only for the minimum information necessary to accomplish the purpose of the disclosure after CMS:

1. Determines that the use or disclosure is consistent with the reason that the data is being collected; *e.g.,* to evaluate the effects of the demonstration on beneficiaries eligibility, access to care, utilization, health care costs, satisfaction with care; quality of care, and health status.

1. Determines that:

a. The purpose for which the disclosure is to be made can only be accomplished if the record is provided in individually identifiable form;

b. The purpose for which the disclosure is to be made is of sufficient importance to warrant the effect and/or risk on the privacy of the individual that additional exposure of the record might bring; and

c. There is a strong probability that the proposed use of the data would in fact accomplish the stated purpose(s).

3. Requires the information recipient to:

a. Establish administrative, technical, and physical safeguards to prevent

b. Unauthorized use of disclosure of the record;

c. Remove or destroy at the earliest time all patient-identifiable information; and

d. Agree to not use or disclose the information for any purpose other than the stated purpose under which the information was disclosed.

4. Determines that the data are valid and reliable.

III. Proposed Routine Use Disclosures of Data in the System

A. Entities Who May Receive Disclosures Under Routine Use

These routine uses specify circumstances, in addition to those provided by statute in the Privacy Act of 1974, under which CMS may release information from the EMRD without the consent of the individual to whom such information pertains. Each proposed disclosure of information under these routine uses will be evaluated to ensure that the disclosure is legally permissible, including but not limited to ensuring that the purpose of the disclosure is compatible with the purpose for which the information was collected.

We are proposing to establish the following routine use disclosures of information maintained in the system:

1. To agency contractors or consultants who have been contracted by the agency to assist in the performance of a service related to this system of records and who need to have access to the records in order to perform the activity.

We contemplate disclosing information under this routine use only in situations in which CMS may enter into a contractual or similar agreement with a third party to assist in accomplishing agency business functions relating to purposes for this system of records.

CMS occasionally contracts out certain of its functions when doing so

would contribute to effective and efficient operations. CMS must be able to give a contractor whatever information is necessary for the contractor to fulfill its duties. In these situations, safeguards are provided in the contract prohibiting the contractor from using or disclosing the information for any purpose other than that described in the contract and requires the contractor to return or destroy all information at the completion of the contract.

2. To the Agency of a state or local government, or established by state law, for purposes of ensuring that no payments are made with respect to any item or service furnished by an individual or entity during the period when such individual or entity is excluded from participation in Medicaid, SCHIP, Medicare or other Federal and State health care programs. Data will be released to the State only on those individuals who are either individuals or entities excluded from participation in Medicaid, SCHIP, Medicare, or other Federal and State health care programs, or employers of excluded individuals or entities, or are legal residents of the State, irrespective of the location of a provider or supplier furnishing items or services.

Program evaluation relies, in large part, on program integrity and the integrity of collected data, the routine use proposed in this paragraph is a necessary requirement for this database, and is therefore, compatible with the purpose for which the information is being collected.

3. To another Federal or state agency:

a. To contribute to the accuracy of CMS's proper payment of Medicaid, SCHIP, or Medicare benefits,

b. To enable such agency to administer a Federal health benefits program, or as necessary to enable such agency to fulfill a requirement of a Federal statute or regulation that implements a health benefits program funded in whole or in part with Federal funds, or

c. To fulfill reporting requirements, research, evaluation, or other policy or epidemiological considerations.

CMS, and other Federal or state and local agencies, all contribute data to the databases included in this SOR, and (both separately and jointly) have an interest in performing program evaluation, conducting research and maintaining program integrity. Therefore, the routine uses described herein are compatible with the purpose for which the data are being collected.

4. To an individual or other private or public entity for research, evaluation or epidemiological projects related to the prevention of disease or disability, the restoration or maintenance of health, or for projects designed to increase the efficiency and economy of care provision.

The EMRD data will provide an opportunity for comprehensive research, evaluation and epidemiological projects regarding EMRD patients. CMS anticipates that many researchers will have legitimate requests to use these data in projects that could ultimately improve the care provided to Medicaid, SCHIP and Medicare beneficiaries and the policy that governs the care.

5. To a Member of Congress or to a congressional staff member in response to an inquiry of the Congressional Office made at the written request of the constituent about whom the record is maintained.

Beneficiaries sometimes request the help of a Member of Congress in resolving some issue relating to a matter before CMS. The Member of Congress then writes CMS, and CMS must be able to give sufficient information to be responsive to the inquiry.

6. To the Department of Justice (DOJ), court or adjudicatory body when:

a. The agency or any component thereof, or

b. Any employee of the agency in his or her official capacity; or

c. Any employee of the agency in his or her individual capacity where the DOJ has agreed to represent the employee, or

d. The United States Government;

is a party to litigation or has an interest in such litigation, and by careful review, CMS determines that the records are both relevant and necessary to the litigation.

Whenever CMS is involved in litigation, or occasionally when another party is involved in litigation and CMS's policies or operations could be affected by the outcome of the litigation, CMS would be able to disclose information to the DOJ, court or adjudicatory body involved. A determination would be made in each instance that, under the circumstances involved, the purposes served by the use of the information in the particular litigation is compatible with a purpose for which CMS collects the information.

7. To CMS or State contractors, to administer some aspect of the health benefits programs, or to a CMS grantee or program which is or could be affected by fraud and abuse, for the purpose of preventing, deterring, discovering, detecting, investigating, examining, prosecuting, suing with respect to, defending against, correcting, remedying, or otherwise combating such fraud and abuse in such programs.

CMS contemplates disclosing information under this routine use only in situations in which CMS may enter into a contractual or similar agreement with a third party to assist in accomplishing CMS functions relating to purposes for this SORs.

CMS occasionally contracts out certain of its functions when this would contribute to effective and efficient operations. CMS must be able to give a contractor whatever information is necessary for the contractor to fulfill its duties. In these situations, safeguards (like ensuring that the purpose for which the disclosure is to be made is of sufficient importance to warrant the effect and/or risk on the privacy of the individual that additional exposure of the record might bring and those stated in II.B above), are provided in the contract prohibiting the contractor from using or disclosing the information for any purpose other than that described in the contract and to return or destroy all information.

Program evaluation relies, in large part, on program integrity and the integrity of collected data, the routine use proposed in this paragraph is a necessary requirement for this database, and is therefore, compatible with the purpose for which the information is being collected.

8. To another Federal agency or to an instrumentality of any governmental jurisdiction within or under the control of the United States, including any State or Local government agency, for the purpose of preventing, deterring, discovering, detecting, investigating, examining, prosecuting, suing with respect to, defending against, correcting, remedying, or otherwise combating such fraud and abuse in health benefits program funded in whole or in part by Federal funds.

Other State or local agencies in their administration of a Federal health program may require EMRD information for the purpose of preventing, deterring, discovering, detecting, investigating, examining, prosecuting, suing with respect to, defending against, correcting, remedying, or otherwise combating such fraud and abuse in such programs. Releases of information would be allowed if the proposed use(s) for the information proved compatible with the purpose for which CMS collects the information.

Program evaluation relies, in large part, on program integrity and the integrity of collected data, the routine use proposed in this paragraph is a necessary requirement for this database, and is therefore, compatible with the

purpose for which the information is being collected.

B. Additional Provisions Affecting Routine Use Disclosures

In addition, our policy will be to prohibit release even of non-identifiable data, except pursuant to one of the routine uses, if there is a possibility that an individual can be identified through implicit deduction based on small cell sizes (instances where the patient population is so small that individuals who are familiar with the enrollees could, because of the small size, use this information to deduce the identity of the beneficiary).

This System of Records contains Protected Health Information as defined by the Department of Health and Human Services' regulation ''Standards for Privacy of Individually Identifiable Health Information'' (45 CFR parts 160 and 164, 65 FR 82462 as amended by 66 FR 12434). Disclosures of Protected Health Information authorized by these routine uses may only be made if, and as, permitted or required by the ''Standards for Privacy of Individually Identifiable Health Information.''

IV. Safeguards

The HHS EMRD system will conform to applicable law and policy governing the privacy and security of Federal automated information systems. These include but are not limited to: the Privacy Act of 1984, Computer Security Act of 1987, the Paperwork Reduction Act of 1995, the Clinger-Cohen Act of 1996, and OMB Circular A–130, Appendix III, ''Security of Federal Automated Information Resources.'' CMS has prepared a comprehensive system security plan as required by OMB Circular A–130, Appendix III. This plan conforms fully to guidance issued by the National Institute for Standards and Technology (NIST) in NIST Special Publication 800–18, ''Guide for Developing Security Plans for Information Technology Systems.'' Paragraphs A–C of this section highlight some of the specific methods that CMS is using to ensure the security of this system and the information within it.

A. Authorized Users

Personnel having access to the system have been trained in Privacy Act requirements. Employees who maintain records in the system are instructed not to release any data until the intended recipient agrees to implement appropriate administrative, technical, procedural, and physical safeguards sufficient to protect the confidentiality of the data and to prevent unauthorized access to the data. Records are used in a designated work area and system location is attended at all times during working hours.

To ensure security of the data, the proper level of class user is assigned for each individual user level. This prevents unauthorized users from accessing and modifying critical data. The system database configuration includes five classes of database users:

- Database Administrator class owns the database objects (e.g., tables, triggers, indexes, stored procedures, packages) and has database administration privileges to these objects.
- Quality Control Administrator class has read and write access to key fields in the database;
- Quality Index Report Generator class has read-only access to all fields and tables;
- Policy Research class has query access to tables, but are not allowed to access confidential patient identification information; and
- Submitter class has read and write access to database objects, but no database administration privileges.

A. Physical Safeguards

All server sites will implement the following minimum requirements to assist in reducing the exposure of computer equipment and thus achieve an optimum level of protection and security for the CMS system:

Access to all servers is to be controlled, with access limited to only those support personnel with a demonstrated need for access. Servers are to be kept in a locked room accessible only by specified management and system support personnel. Each server is to require a specific log-on process. All entrance doors are identified and marked. A log is kept of all personnel who were issued a security card, key and/or combination, which grants access to the room housing the server, and all visitors are escorted while in this room. All servers are housed in an area where appropriate environmental security controls are implemented, which include measures implemented to mitigate damage to Automated Information Systems (AIS) resources caused by fire, electricity, water and inadequate climate controls.

Protection applied to the workstations, servers and databases include:

- User Log-on—Authentication is to be performed by the Primary Domain Controller/Backup Domain Controller of the log-on domain.
- Workstation Names—Workstation naming conventions may be defined and implemented at the agency level.
- Hours of Operation—May be restricted by Windows NT. When activated all applicable processes will automatically shut down at a specific time and not be permitted to resume until the predetermined time. The appropriate hours of operation are to be determined and implemented at the agency level.
- Inactivity Lockout—Access to the NT workstation is to be automatically locked after a specified period of inactivity.
- Warnings—Legal notices and security warnings are to be displayed on all servers and workstations.
- Remote Access Security—Windows NT Remote Access Service (RAS) security handles resource access control. Access to NT resources is to be controlled for remote users in the same manner as local users, by utilizing Windows NT file and sharing permissions. Dial-in access can be granted or restricted on a user-by-user basis through the Windows NT RAS administration tool.

A. Procedural Safeguards

All automated systems must comply with Federal laws, guidance, and policies for information systems security. These include, but are not limited to: the Privacy Act of 1974; the Computer Security Act of 1987; OMB Circular A–130, revised; Information Resource Management (IRM) Circular #10; HHS Automated Information Systems Security Program; the CMS Information Systems Security Policy, Standards, and Guidelines Handbook; and other CMS systems security policies. Each automated information system should ensure a level of security commensurate with the level of sensitivity of the data, risk, and magnitude of the harm that may result from the loss, misuse, disclosure, or modification of the information contained in the system.

II. Effects of the New System On Individual Rights

CMS proposes to establish this system in accordance with the principles and requirements of the Privacy Act and will collect, use, and disseminate information only as prescribed therein. Data in this system will be subject to the authorized releases in accordance with the routine uses identified in this system of records.

CMS will monitor the collection and reporting of EMRD data. EMRD information on patients is submitted to CMS through standard systems. Accuracy of the data is important since incorrect information could result in the wrong payment for services and a less

effective process for assuring quality of services. CMS will utilize a variety of onsite and offsite edits and audits to increase the accuracy of EMRD data.

CMS will take precautionary measures (see item IV. above) to minimize the risks of unauthorized access to the records and the potential harm to individual privacy or other personal or property rights of patients whose data is maintained in the system. CMS will collect only that information necessary to perform the system's functions. In addition, CMS will make disclosure from the proposed system only with consent of the subject individual, or his/her legal representative, or in accordance with an applicable exception provision of the Privacy Act.

CMS, therefore, does not anticipate an unfavorable effect on individual privacy as a result of maintaining this system of records.

Dated: January 4, 2002.

Thomas A. Scully,

Administrator, Centers for Medicare & Medicaid Services.

09–70–0068

SYSTEM NAME:

''Evaluations of the Medicaid Reform Demonstrations,'' (EMRD).

SECURITY CLASSIFICATION:

Level 3, Privacy Act Sensitive.

SYSTEM LOCATION:

CMS Data Center, 7500 Security Boulevard, North Building, First Floor, Baltimore, Maryland 21244–1850 and CMS contractors and agents at various locations.

CATEGORIES OF INDIVIDUALS COVERED BY THE SYSTEM:

Individuals eligible for Medicaid under the demonstrations (eligibility requirements vary by State) and individuals selected as comparison group members for the evaluations.

CATEGORIES OF RECORDS IN THE SYSTEM:

The system will contain information concerning individual identifiers, demographics, employment, health care coverage, diagnostic and health status information, utilization and cost of health care services, and responses to survey or, other types of data collection methods.

AUTHORITY FOR MAINTENANCE OF THE SYSTEM:

Section 1875(a) (42 U.S.C. 1395ll) and section 1115 (42 U.S.C. 1315) of the Social Security Act.

PURPOSE(S) OF THE SYSTEM:

The primary purpose of this system of records (SOR) is to collect and provide data necessary to evaluate a series of Medicaid Reform Demonstrations that rely on waivers of section 1115 of the Social Security Act. This system will allow measurement of the effects of the demonstration on beneficiaries eligibility, access to care, utilization, health care costs, satisfaction with care, quality of care and health status. The information retrieved from this SOR will be used: (1) To support program administration, reporting, and regulatory, reimbursement, and policy functions performed within the Health Care Financing Administration (CMS) or by a contractor or consultant; (2) to enable another Federal or State agency to contribute to the accuracy of the CMS's proper payment of Medicaid, State Children's Health Insurance Program and Medicare benefits; (3) to enable CMS to administer a Federal health benefits program or to enable CMS to fulfill a requirement of a Federal statute or regulation that implements a health benefits program funded in whole or in part with Federal funds; (4) to support constituent requests made by a Congressional representative; (5) to support litigation involving the agency; (6) to support program administration, reporting, research, evaluation, and related issues; (7) and to disclose individual-specific information for the purpose of combating fraud and abuse in health benefits programs administered by CMS.

ROUTINE USES OF RECORDS MAINTAINED IN THE SYSTEM, INCLUDING CATEGORIES OR USERS AND THE PURPOSES OF SUCH USES:

These routine uses specify circumstances, in addition to those provided by statute in the Privacy Act of 1974, under which CMS may release information from the EMRD without the consent of the individual to whom such information pertains. Each proposed disclosure of information under these routine uses will be evaluated to ensure that the disclosure is legally permissible, including but not limited to ensuring that the purpose of the disclosure is compatible with the purpose for which the information was collected. In addition, our policy will be to prohibit release even of non-identifiable data, except pursuant to one of the routine uses, if there is a possibility that an individual can be identified through implicit deduction based on small cell sizes (instances where the patient population is so small that individuals who are familiar with the enrollees could, because of the small size, use this information to deduce the identity of the beneficiary). Be advised, this System of Records contains Protected Health Information as defined by the Department of Health and Human Services' regulation ''Standards for Privacy of Individually Identifiable Health Information'' (45 CFR parts 160 and 164, 65 FR 8462 as amended by 66 FR 12434). Disclosures of Protected Health Information authorized by these routine uses may only be made if, and as, permitted or required by the ''Standards for Privacy of Individually Identifiable Health Information.''

1. To agency contractors or consultants who have been contracted by the agency to assist in the performance of a service related to this system of records and who need to have access to the records in order to perform the activity.

2. To the Agency of a state or local government, or established by state law, for purposes of ensuring that no payments are made with respect to any item or service furnished by an individual or entity during the period when such individual or entity is excluded from participation in Medicaid, SCHIP, Medicare or other Federal and state health care programs. Data will be released to the State only on those individuals who are either individuals or entities excluded from participation in Medicaid, SCHIP, Medicare, or other Federal and state health care programs, or employers of excluded individuals or entities, or are legal residents of the State, irrespective of the location of a provider or supplier furnishing items or services.

3. To another Federal or state agency:

a. To contribute to the accuracy of CMS's proper payment of Medicaid, SCHIP, or Medicare benefits,

b. To enable such agency to administer a Federal health benefits program, or as necessary to enable such agency to fulfill a requirement of a Federal statute or regulation that implements a health benefits program funded in whole or in part with Federal funds, or

c. To fulfill reporting requirements, research, evaluation, or other policy or epidemiological considerations.

4. To an individual or other private or public entity for research, evaluation or epidemiological projects related to the prevention of disease or disability, the restoration or maintenance of health, or for projects designed to increase the efficiency and economy of care provision.

5. To a member of Congress or to a congressional staff member in response to an inquiry of the Congressional Office made at the written request of the constituent about whom the record is maintained.

6. To the Department of Justice (DOJ), court or adjudicatory body when:

a. The agency or any component thereof; or

b. Any employee of the agency in his or her official capacity; or

c. Any employee of the agency in his or her individual capacity where the DOJ has agreed to represent the employee; or

d. The United States Government; is a party to litigation or has an interest in such litigation, and by careful review, CMS determines that the records are both relevant and necessary to the litigation and the use of such records by the DOJ, court or adjudicatory body is compatible with the purpose for which the agency collected the records.

7. To CMS or state contractors, to administer some aspect of the health benefits programs, or to a CMS grantee or program which is or could be affected by fraud and abuse, for the purpose of preventing, deterring, discovering, detecting, investigating, examining, prosecuting, suing with respect to, defending against, correcting, remedying, or otherwise combating such fraud and abuse in such programs.

8. To another Federal agency or to an instrumentality of any governmental jurisdiction within or under the control of the United States, including any State or Local government agency, for the purpose of preventing, deterring, discovering, detecting, investigating, examining, prosecuting, suing with respect to, defending against, correcting, remedying, or otherwise combating such fraud and abuse in health benefits program funded in whole or in part by Federal funds.

POLICIES AND PRACTICES FOR STORING, RETRIEVING, ACCESSING, RETAINING, AND DISPOSING OF RECORDS IN THE SYSTEM:

STORAGE:

All records are stored on paper or electronic media.

RETRIEVABILITY:

Beneficiary's name, Medicaid identification number, Health Insurance Claim Number, Social Security Number or other identifying variables retrieve the records.

SAFEGUARDS:

CMS has safeguards for authorized users and monitors such users to ensure against excessive or unauthorized use. Personnel having access to the system have been trained in the Privacy Act and systems security requirements. Employees who maintain records in the system are instructed not to release any data until the intended recipient agrees to implement appropriate administrative, technical, procedural, and physical safeguards sufficient to protect the confidentiality of the data and to prevent unauthorized access to the data.

In addition, CMS has physical safeguards in place to reduce the exposure of computer equipment and thus achieve an optimum level of protection and security for the CMS system. For computerized records, safeguards have been established in accordance with HHS standards and National Institute of Standards and Technology guidelines; e.g., security codes will be used, limiting access to authorized personnel. System securities are established in accordance with HHS, Information Resource Management (IRM) Circular #10, Automated Information Systems Security Program; CMS Information Systems Security, Standards Guidelines Handbook and OMB Circular No. A–130 (revised) Appendix III.

RETENTION AND DISPOSAL:

CMS and the repository of the National Archive and Records Administration (NARA) will retain identifiable EMRD data permanently, or as an indefinite retention.

SYSTEM MANAGER AND ADDRESS:

CMS, Director, Office of Strategic Planning, Health Care Financing Administration, 7500 Security Boulevard, Baltimore, Maryland 21244–1850.

NOTIFICATION PROCEDURE:

For purpose of access, the subject individual should write to the system manager who will require the system name, health insurance claim number, and for verification purposes, the subject individual's name (woman's maiden name, if applicable), address, age, and sex, and social security number (SSN) (furnishing the SSN is voluntary, but it may make searching for a record easier and prevent delay).

RECORD ACCESS PROCEDURE:

For purpose of access, use the same procedures outlined in Notification Procedures above. Requestors should also reasonably specify the record contents being sought. (These procedures are in accordance with Department regulation 45 CFR part 5b.5(a)(2).)

CONTESTING RECORD PROCEDURES:

The subject individual should contact the system manager named above, and reasonably identify the record and specify the information to be contested. State the corrective action sought and the reasons for the correction with supporting justification. (These procedures are in accordance with Department regulation 45 CFR part 5b.7.)

RECORD SOURCE CATEGORIES:

Sources of information contained in this records system are expected to include: State Medicaid Management Information Systems, managed care organizations (i.e., encounter data), fee-for-service providers, surveys of demonstration participants or providers and comparison group members, medical records, Social Security Administration data bases, vital statistics and other relevant data systems.

SYSTEMS EXEMPTED FROM CERTAIN PROVISIONS OF THE ACT:

None.

[FR Doc. 02–1063 Filed 1–15–02; 8:45 am]

BILLING CODE 4120–03–P

DEPARTMENT OF HEALTH AND HUMAN SERVICES

Food and Drug Administration

Establishment of Prescription Drug User Fee Rates for Fiscal Year 2002

AGENCY: Food and Drug Administration, HHS.

ACTION: Notice.

SUMMARY: The Food and Drug Administration (FDA) is announcing the rates for prescription drug user fees for fiscal year (FY) 2002. The Prescription Drug User Fee Act of 1992 (PDUFA), as amended by the Food and Drug Administration Modernization Act of 1997 (FDAMA), authorizes FDA to collect user fees for certain applications for approval of drug and biological products, on establishments where the products are made, and on such products. Fees for applications for FY 2002 were set by PDUFA, as amended, subject to adjustment for inflation. Total application fee revenues fluctuate with the number of fee-paying applications FDA receives. Fees for establishments and products are calculated so that total revenues from each category will approximate FDA's estimate of the revenues to be derived from applications.

FOR FURTHER INFORMATION CONTACT: Frank Claunts, Office of Management and Systems (HFA–300), Food and Drug Administration, 5600 Fishers Lane, Rockville, MD 20857, 301–827–4427.

SUPPLEMENTARY INFORMATION:

I. Background

PDUFA (Public Law 102–571), as amended by FDAMA (Public Law 105–

115), referred to as PDUFA II in this document, establishes three different kinds of user fees. Fees are assessed on: (1) Certain types of applications and supplements for approval of drug and biological products, (2) certain establishments where such products are made, and (3) certain products (21 U.S.C. 379h(a)). When certain conditions are met, FDA may waive or reduce fees (21 U.S.C. 379h(d)).

For FY 1998 through 2002, under PDUFA II, the application fee rates are set in the statute, but are to be adjusted annually for cumulative inflation since FY 1997. Total application fee revenues are structured to increase or decrease each year as the number of fee-paying applications submitted to FDA increases or decreases.

Each year from FY 1998 through 2002, FDA is required to set establishment fees and product fees so that the estimated total fee revenue from each of these two categories will equal the total revenue FDA expects to collect from application fees that year. This procedure continues the arrangement under which one-third of the total user fee revenue is projected to come from each of the three types of fees: Application fees, establishment fees, and product fees.

This notice establishes fee rates for FY 2002 for application, establishment, and product fees. These fees are retroactive to October 1, 2001, and will remain in effect through September 30, 2002. For fees already paid on applications and supplements submitted on or after October 1, 2001, FDA will bill applicants for the difference between fees paid and fees due under the new fee schedule. For applications and supplements submitted after January 16, 2002, the new fee schedule must be used. Invoices for establishment and product fees for FY 2002 will be issued in January 2002, using the new fee schedule.

II. Inflation and Workload Adjustment Process

PDUFA II provides that fee rates for each FY shall be adjusted by notice in the **Federal Register**. The adjustment must reflect the greater of : (1) The total percentage change that occurred during the preceding FY in the Consumer Price Index (CPI) (all items; U.S. city average), or (2) the total percentage pay change for that FY for Federal employees stationed in the Washington, DC metropolitan area. PDUFA II provides for this annual adjustment to be cumulative and compounded annually after 1997 (see 21 U.S.C. 379h(c)(1)).

PDUFA II also structures the total application fee revenue to increase or decrease each year as the number of fee-paying applications submitted to FDA increases or decreases. This provision allows revenues to rise or fall as this portion of FDA's workload rises or falls. To implement this provision, each year FDA will estimate the number of fee-paying applications it anticipates receiving. The number of applications estimated will then be multiplied by the inflation-adjusted statutory application fee. This calculation will produce the FDA estimate of total application fee revenues to be received.

PDUFA II also provides that FDA shall adjust the rates for establishment and product fees so that the total revenues from each of these categories is projected to equal the revenues FDA expects to collect from application fees that year. PDUFA II provides that the new fee rates based on these calculations be adjusted within 60 days after the end of each FY (21 U.S.C. 379h(c)(2)).

III. Inflation Adjustment and Estimate of Total Application Fee Revenue

PDUFA II provides that the application fee rates set out in the statute be adjusted each year for cumulative inflation since 1997. It also provides for total application fee revenues to increase or decrease based on increases or decreases in the number of fee-paying applications submitted.

A. Inflation Adjustment to Application Fees

Application fees are assessed at different rates for qualifying applications depending on whether the applications require clinical data for safety or effectiveness (other than bioavailability or bioequivalence studies) (21 U.S.C. 379h(a)(1)(A) and 379h(b)). Applications that require clinical data are subject to the full application fee. Applications that do not require clinical data and supplements that require clinical data are assessed one-half the fee of applications that require clinical data. If FDA refuses to file an application or supplement, 75 percent of the application fee is refunded to the applicant (21 U.S.C. 379h(a)(1)(D)).

The application fees described above are set out in PDUFA II for FY 2002 ($258,451 for applications requiring clinical data, and $129,226 for applications not requiring clinical data or supplements requiring clinical data) (21 U.S.C. 379h(b)(1)), but must be adjusted for cumulative inflation since 1997. That adjustment each year is to be the greater of: (1) The total percentage change that occurred during the preceding FY in the CPI, or (2) the total percentage pay change for that FY for Federal employees stationed in the Washington, DC metropolitan area, as adjusted for any locality-based payment. PDUFA II provides for this annual adjustment to be cumulative and compounded annually after 1997 (see 21 U.S.C. 379h(c)).

The adjustment for FY 1998 was 2.45 percent (62 FR 64849, December 9, 1997). This was the greater of the CPI increase for FY 1997 (2.15 percent) or the increase in applicable Federal salaries (2.45 percent).

The adjustment for FY 1999 was 3.68 percent. (63 FR 70777 at 70778, December 22, 1998). This was the greater of the CPI increase for FY 1998 (1.49 percent) or the increase in applicable Federal salaries (3.68 percent).

The adjustment for FY 2000 was 4.94 percent (64 FR 72669 at 72670, December 28, 1999). This was the greater of the CPI increase for FY 1999 (2.62 percent) or the increase in applicable Federal salaries (4.94 percent).

The adjustment for FY 2001 was 3.81 percent (65 FR 79107 at 79108, December 18, 2000). This was the greater of the CPI increase for FY 2000 (2.62 percent) or the increase in applicable Federal salaries (3.81 percent).

The adjustment for FY 2002 is 4.77 percent. This is the greater of the CPI increase for FY 2001 (2.65 percent) or the increase in applicable Federal salaries (4.77 percent).

Compounding these amounts (1.0245 times 1.0368 times 1.0494 times 1.0381 times 1.0477) yields a total compounded inflation increase of 21.23 percent for FY 2002. The adjusted application fee rates are computed by adding one to the decimal equivalent of this percent (0.2123) and multiplying this amount (1.2123) by the FY 2002 statutory application fee rates stated above ($258,451 for applications requiring clinical data, and $129,226 for applications not requiring clinical data or supplements requiring clinical data). For FY 2002 the adjusted application fee rates are $313,320 for applications requiring clinical data, and $156,660 for applications not requiring clinical data or supplements requiring clinical data. These amounts must be submitted with all applications during FY 2002.

B. Estimate of Total Application Fee Revenue

Total application fee revenues for FY 2002 will be estimated by multiplying the number of fee-paying applications FDA expects to receive in FY 2002 (from October 1, 2001, through September 30,

2002) by the fee rates calculated in the preceding paragraph. Before fees can be set for establishment and product fee categories, each of which are projected to be equal to total revenues FDA collects from application fees, FDA must first estimate its total FY 2002 application fee revenues. To do this FDA first determines its FY 2001 fee-paying full application equivalents, and uses that number in a linear regression analysis to predict the number of fee-paying full application equivalents expected in FY 2002. This is the same technique applied in each of the previous 3 fiscal years.

In FY 2001, FDA received and filed 95 human drug applications that require clinical data for approval, 16 that did not require clinical data for approval, and 126 supplements to human drug applications that required clinical data for approval. Because applications that do not require clinical data and supplements that require clinical data are assessed only one-half the full fee, the equivalent number of these applications subject to the full fee is determined by summing these categories and dividing by 2. This amount is then added to the number of applications that require clinical data to arrive at the equivalent number of applications that may be subject to full application fees.

In addition, as of September 30, 2000, FDA refused to file, or firms withdrew before filing, 2 applications that required clinical data, and 5 applications that either did not require clinical data or that were supplements requiring clinical data. The full applications refused for filing or withdrawn before filing pay one-fourth the full application fee and are counted as one-fourth of an application; the applications that do not require clinical data and the supplements refused for filing or withdrawn before filing pay one-eighth of the full application fee and are each counted as one-eighth of an application.

Using this methodology, the number of full application equivalent (FAE) submissions that were received for review in FY 2001 was 167.125, before any exemptions, waivers or reductions. Under PDUFA II, FDA waives application fees for certain small businesses submitting their first application and for certain orphan products. Certain application supplements for pediatric indications are also exempt from fees. In addition, PDUFA II provides a number of other grounds for waivers (public health necessity, preventing significant barriers to innovation, and fees exceed the cost). In FY 2001 waivers or exemptions were applied to 59 FAE submissions (14.5 for orphan products, 12 for small businesses, 19 for pediatric supplements, and 13.5 miscellaneous exemptions/waivers). Therefore, for FY 2001, FDA estimates that it received 108.125 (167.125 minus 59) FAE submissions that will pay fees, after allowing for exemptions, waivers and reductions.

Next a linear regression line based on the adjusted number of fee-paying FAE submissions since 1993, and including our FY 2001 total of FAEs, must be drawn to project the number of FAEs in FY 2002.

In FY 2002, however, additional applications will have to pay fees. All pediatric supplements will be required to pay fees effective January 4, 2002 (for three-fourths of FY 2002). This is the result of section 5 of the Best Pharmaceuticals for Children Act. It repealed the fee exemption for pediatric supplements effective January 4, 2002. Thus, the regression line projecting FY 2002 fee-paying receipts must be drawn to reflect this change. In FY 1998, 8 full fees were exempted for pediatric supplements; the numbers for FY 1999, FY 2000, and FY 2001 respectively were 5.25, 12.5, and 19. Since fees on these supplements will only be paid for three-fourths of FY 2002 (January 1 through September 30, 2002), three-fourths of the number of pediatric supplements waived each year from FY 1998 through FY 2001 (the only years when fees were waived) will be added to the total of fee-paying FAEs received each year.

A linear regression line based on this adjusted number of fee-paying FAE submissions since 1993, and including our adjusted FY 2001 total of 122.375 FAEs (108.125 fee-paying FAEs and three-fourths of the 19 pediatric supplements that were exempted in FY 2001), projects the receipt of 158.3 fee-paying FAEs in FY 2002, as reflected in table 1 of this document and the graph below.

TABLE 1.

Fiscal Year	1993	1994	1995	1996	1997	1998	1999	2000	2001	2002
Fee-paying FAEs	101.0	108.9	112.5	136.3	161.5	124.5	154.6	162.9	122.4	
Regression Line	110.3	115.6	121.0	126.3	131.6	137.0	142.3	147.6	152.9	158.3

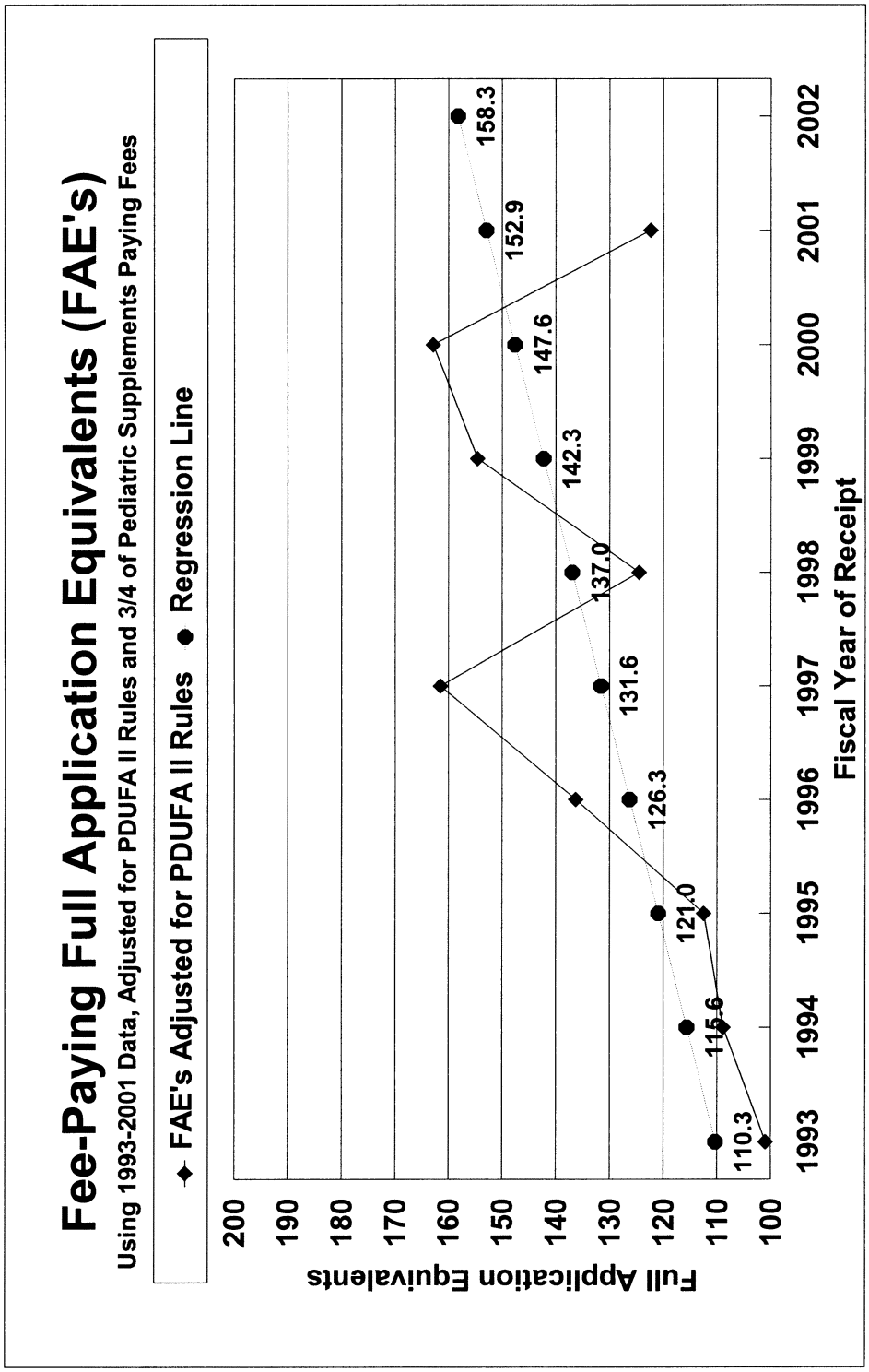

The total FY 2002 application fee revenue is estimated by multiplying the adjusted application fee rate ($313,320) by the number of applications projected to qualify for fees in FY 2002 (158.3), for a total estimated application fee revenue in FY 2001 of $49,598,556. This is the amount of revenue that FDA is also expected to derive both from establishment fees and from product fees.

IV. Adjustment for Excess Collections in Previous Years

Under the provisions of PDUFA II, if the agency collects more fees than were provided for in appropriations in any year after 1997, FDA is required to reduce its anticipated fee collections in a subsequent year by that amount (21 U.S.C. 379h(g)(4)).

In FY 1998, Congress appropriated a total of $117,122,000 to FDA in PDUFA II fee revenue. To date, collections for FY 1998 total $117,737,470---a total of $615,470 in excess of the appropriation limit. This is the only fiscal year since 1997 in which FDA has collected more

in PDUFA II fees than Congress appropriated.

FDA also has requests for waivers or reductions of FY 1998 fees pending. For this reason FDA is not reducing its FY 2002 fees to offset excess collections at this time. An offset will be considered in a future year, if FDA still has collections in excess of appropriations for FY 1998 after the pending requests for FY 1998 waivers and reductions have been resolved.

V. Fee Calculations for Establishment and Product Fees

A. Establishment Fees

At the beginning of FY 2001, the establishment fee was based on an estimate of 347 establishments subject to fees. For FY 2001, 379 establishments qualified for and were billed for establishment fees, before all decisions on requests for waivers or reductions were made. FDA estimates that a total of 25 establishment fee waivers or reductions will be made for FY 2001, for a net of 354 fee-paying establishments, and will use this number for its FY 2002 estimate of establishments paying fees, after taking waivers and reductions into account. The fee per establishment is determined by dividing the adjusted total fee revenue to be derived from establishments ($49,598,556), by the estimated 354 establishments, for an establishment fee rate for FY 2002 of $140,109 (rounded to the nearest dollar).

B. Product Fees

At the beginning of FY 2001, the product fee was based on an estimate that 2,314 products would be subject to product fees. By the end of FY 2001, 2,348 products qualified and were billed for product fees before all decisions on requests for waivers or reductions were made. Assuming that there will be about 55 waivers and reductions made, FDA estimates that 2,293 products will qualify for product fees in FY 2002, after allowing for waivers and reductions, and will use this number for its FY 2002 estimate. Accordingly, the FY 2002 product fee rate is determined by dividing the adjusted total fee revenue to be derived from product fees ($49,598,556) by the estimated 2,293 products for a product fee rate of $21,630 (rounded to the nearest dollar).

VI. Adjusted Fee Schedule for FY 2002

The fee rates for FY 2002 are set out in table 2 of this document:

TABLE 2.

Fee Category	Fee Rates for FY 2002
Applications	
Requiring clinical data	$313,320
Not requiring clinical data	$156,660
Supplements requiring clinical data	$156,660
Establishments	$140,109
Products	$21,630

VII. Implementation of Adjusted Fee Schedule

A. Application Fees

Any application or supplement subject to fees under PDUFA II that is submitted after January 16, 2002, must be accompanied by the appropriate application fee established in the new fee schedule. Payment must be made in U.S. currency by check, bank draft, or U.S. postal money order payable to the order of the Food and Drug Administration. Please include the user fee ID number on your check. Your check can be mailed to: Food and Drug Administration, P.O. Box 360909, Pittsburgh, PA 15251–6909.

If checks are to be sent by a courier that requests a street address, the courier can deliver the checks to: Food and Drug Administration (360909), Mellon Client Service Center, rm. 670, 500 Ross St., Pittsburgh, PA 15262–0001. (Note: This Mellon Bank Address is for courier delivery only.)

Please make sure that the FDA P.O. Box number (P.O. Box 360909) is on the enclosed check.

FDA will bill applicants who submitted lower application fees from October 1 to January 16, 2002, for the difference between the amount they submitted and the amount specified in the Adjusted Fee Schedule for FY 2002.

B. Establishment and Product Fees

By [*insert date of publication in the* **Federal Register**], FDA will issue invoices for establishment and product fees for FY 2002 under the new Adjusted Fee Schedule. Payment will be due by January 31, 2002. FDA will issue invoices for any products and establishments subject to fees for FY 2002 that qualify for fees after the January 2002 billing.

Dated: January 10, 2002.

Margaret M. Dotzel,

Associate Commissioner for Policy.

[FR Doc. 02–1068 Filed 1–11–02; 2:57 pm]

BILLING CODE 4160–01–S

DEPARTMENT OF HEALTH AND HUMAN SERVICES

Food and Drug Administration

[Docket No. 97D–0318]

''Guidance for Industry: Revised Preventive Measures to Reduce the Possible Risk of Transmission of Creutzfeldt-Jakob Disease (CJD) and Variant Creutzfeldt-Jakob Disease (vCJD) by Blood and Blood Products;'' Availability

AGENCY: Food and Drug Administration, HHS.

ACTION: Notice.

SUMMARY: The Food and Drug Administration (FDA) is announcing the availability of a document entitled ''Guidance for Industry: Revised Preventive Measures to Reduce the Possible Risk of Transmission of Creutzfeldt-Jakob Disease (CJD) and Variant Creutzfeldt-Jakob Disease (vCJD) by Blood and Blood Products'' dated January 2002. The new recommendations are intended to minimize the possible risk of CJD and vCJD transmission from blood and blood products. The guidance document provides comprehensive current recommendations to all registered blood and plasma establishments for deferral of donors with possible exposure to the agent of vCJD. The guidance document announced in this notice finalizes the draft guidance of the same title, dated August 2001, and supersedes the guidance document entitled ''Revised Preventive Measures to Reduce the Possible Risk of Transmission of Creutzfeldt-Jakob Disease (CJD) and New Variant Creutzfeldt-Jakob Disease (nvCJD) by Blood and Blood Products'' dated November 1999.

DATES: Submit written or electronic comments on agency guidance documents at any time.

ADDRESSES: Submit written requests for single copies of this guidance to the Office of Communication, Training, and Manufacturers Assistance (HFM–40), Center for Biologics Evaluation and Research (CBER), Food and Drug Administration, 1401 Rockville Pike, Rockville, MD 20852–1448. Send one self-addressed adhesive label to assist the office in processing your requests. The document may also be obtained by mail by calling the CBER Voice Information System at 1–800–835–4709 or 301–827–1800, or by fax by calling the FAX Information System at 1–888–CBER–FAX or 301–827–3844. See the **SUPPLEMENTARY INFORMATION** section for electronic access to the guidance document.

Submit written comments on the guidance document to the Dockets Management Branch (HFA–305), Food and Drug Administration, 5630 Fishers Lane, rm. 1061, Rockville, MD 20852. Submit electronic comments to http://www.fda.gov/dockets/ecomments.

FOR FURTHER INFORMATION CONTACT: Valerie A. Butler, Center for Biologics Evaluation and Research (HFM–17), Food and Drug Administration, 1401 Rockville Pike, Rockville, MD 20852–1448, 301–827–6210.

SUPPLEMENTARY INFORMATION:

I. Background

FDA is announcing the availability of a document entitled ''Guidance for Industry: Revised Preventive Measures to Reduce the Possible Risk of Transmission of Creutzfeldt-Jakob Disease (CJD) and Variant Creutzfeldt-Jakob Disease (vCJD) by Blood and Blood Products'' dated January 2002. This guidance document contains comprehensive revised recommendations based upon advisory committee discussions, internal Public Health Service and FDA deliberations, and public comments. FDA has developed recommendations for donor deferral, and product retrieval, quarantine, and disposition based upon consideration of risk in the donor and product, and the effect that withdrawals and deferrals might have on the supply of life- and health-sustaining blood components and plasma derivatives. The new recommendations are intended to minimize the possible risk of CJD and vCJD transmission from blood products while maintaining their availability. The guidance document announced in this notice finalizes the draft guidance of the same title, dated August 2001, announced in the **Federal Register** of August 29, 2001 (66 FR 45683). The guidance document also supersedes the guidance document entitled ''Revised Preventive Measures to Reduce the Possible Risk of Transmission of Creutzfeldt-Jakob Disease (CJD) and New Variant Creutzfeldt-Jakob Disease (nvCJD) by Blood and Blood Products'' dated November 1999 (64 FR 65715, November 23, 1999).

This guidance is being issued consistent with FDA's good guidance practices regulation (21 CFR 10.115). This guidance document represents the agency's current thinking on this topic. It does not create or confer any rights for or on any person and does not operate to bind FDA or the public. An alternative approach may be used if such approach satisfies the requirement of the applicable statutes and regulations.

II. Comments

Interested persons may, at any time, submit written comments to the Dockets Management Branch (address above) regarding this guidance document. Two copies of any comments are to be submitted, except individuals may submit one copy. Comments should be identified with the docket number found in the brackets in the heading of this document. A copy of the document and received comments are available for public examination in the Dockets Management Branch between 9 a.m. and 4 p.m., Monday through Friday.

III. Electronic Access

Persons with access to the Internet may obtain the document at either http://www.fda.gov/cber/guidelines.htm or http://www.fda.gov/ohrms/dockets/default.htm.

Dated: January 7, 2002.

Margaret M. Dotzel,

Associate Commissioner for Policy.

[FR Doc. 02–1026 Filed 1–15–02; 8:45 am]

BILLING CODE 4160–01–S

DEPARTMENT OF HOUSING AND URBAN DEVELOPMENT

[Docket No. FR–4739–N–01]

Notice of Proposed Information Collection: Comment Request; Land Sales Registration, Purchaser's Revocation Rights, Sales Practices and Standards, and Formal Procedures and Rules of Practice

AGENCY: Office of the Assistant Secretary for Housing—Federal Housing Commissioner, HUD.

ACTION: Notice.

SUMMARY: The proposed information collection requirement described below will be submitted to the Office of Management and Budget (OMB) for review, as required by the Paperwork Reduction Act. The Department is soliciting public comments on the subject proposal.

DATES: *Comments Due Date:* March 18, 2002.

ADDRESSES: Interested persons are invited to submit comments regarding this proposal. Comments should refer to the proposal by name and/or OMB Control Number and should be sent to: Wayne Eddins, Reports Management Officer, Department of Housing and Urban Development, 451 7th Street, SW., L'Enfant Plaza Building, Room 8001, Washington, DC 20410.

FOR FURTHER INFORMATION CONTACT: Ivy Jackson, Acting Director, Interstate Land Sales/RESPA Division, Office of Consumer and Regulatory Affairs, Department of Housing and Urban Development, 451 7th Street, SW, Washington, DC 20410, telephone (202) 708–0502 (this is not a toll free number) for copies of the proposed forms and other available information.

SUPPLEMENTARY INFORMATION: The Department is submitting the proposed information collection to OMB for review, as required by the Paperwork Reduction Act of 1995 (44 U.S.C. chapter 35, as amended).

This notice is soliciting comments from members of the public and affected agencies concerning the proposed collection of information to: (1) Evaluate whether the proposed collection is necessary for the proper performance of the functions of the agency, including whether the information will have practical utility; (2) Evaluate the accuracy of the agency's estimate of the burden of the proposed collection of information; (3) Enhance the quality, utility, and clarity of the information to be collected; and (4) Minimize the burden of the collection of information on those who are to respond; including the use of appropriate automated collection techniques or other forms of information technology, *e.g.*, permitting electronic submission of responses.

This Notice also lists the following information:

Title of Proposal: Land Registration, Purchaser's Revocation Rights, Sales Practices and Standards, and Formal Procedures and Rules of Practice.

OMB Control Number, if applicable: 2502–0243.

Description of the need for the information and proposed use: The Interstate Land Sales Full Disclosure Act protects consumers from fraud in the sale of land by requiring developers of non-exempt subdivisions to register with HUD and give purchasers a

property report. The property report discloses facts about the land so the purchaser can make an informed lot purchase and tells them of their revocation rights. Developers are required to register subdivisions of 100 or more non-exempt lots with HUD.

Agency form numbers, if applicable: None.

Estimation of the total numbers of hours needed to prepare the information collection including number of respondents, frequency of response, and hours of response: There is a total of 19,579 annual burden hours estimated for a total of approximately 5,270 respondents. The frequency of response is on occasion, annually, and third-party disclosure totaling 117,958 total annual responses.

Status of the proposed information collection: Extension of a currently approved information collection.

Authority: The Paperwork Reduction Act of 1995, 44 U.S.C., Chapter 35, as amended.

Dated: January 6, 2002.

John C. Weicher,

Assistant Secretary for Housing—Federal Housing Commissioner.

[FR Doc. 02–1031 Filed 1–15–02; 8:45 am]

BILLING CODE 4210–27–M

DEPARTMENT OF HOUSING AND URBAN DEVELOPMENT

[Docket No. FR–4630–FA–31]

Housing Counseling Program Announcement of Funding Awards for Fiscal Year 2001

AGENCY: Office of the Assistant Secretary for Housing-Federal Housing Commissioner, HUD.

ACTION: Announcement of funding awards.

SUMMARY: In accordance with section 102(a)(4)(C) of the Department of Housing and Urban Development Reform Act of 1989, this announcement notifies the public of funding decisions made by the Department in a SuperNOFA competition for funding of HUD-approved counseling agencies to provide counseling services. This announcement contains the names and addresses of the agencies selected for funding and the amount. Additionally, this announcement outlines various noncompetitive housing counseling awards made by the Department.

FOR FURTHER INFORMATION CONTACT: Margaret Burns, Director, Program Support Division, Room 9166, Office of Single Family Housing, Department of Housing and Urban Development, 451 Seventh Street, SW., Washington, DC 20410, telephone (202) 708–2121. Hearing- or speech-impaired individuals may access this number by calling the Federal Information Relay Service on 1–800–877–8339 or (202) 708–9300. (With the exception of the ''800'' number, these are not toll free numbers.)

SUPPLEMENTARY INFORMATION: The Housing Counseling Program is authorized by section 106 of the Housing and Urban Development Act of 1968 (12 U.S.C. 1701x). HUD enters into agreement with qualified public or private nonprofit organizations to provide housing counseling services to low- and moderate-income individuals and families nationwide. The services include providing information, advice and assistance to renters, first-time homebuyers, homeowners, and senior citizens in areas such as pre-purchase counseling, financial management, property maintenance and other forms of housing assistance to improve the clients' housing conditions and meet the responsibilities of tenancy and homeownership.

The purpose of the grant is to assist HUD-approved housing counseling agencies in providing housing counseling services to HUD-related and other clients. HUD funding of approved housing counseling agencies is not guaranteed and when funds are awarded, a HUD grant does not cover all expenses incurred by an agency to deliver housing counseling services. Counseling agencies must actively seek additional funds from other sources such as city, county, state and federal agencies and from private entities to ensure that they have sufficient operating funds. The availability of housing counseling program grants depends upon whether the U.S. Congress appropriates funds for this purpose, the amount of those funds, and the outcome of the competitions for award.

The 2001 grantees announced in Appendix A of this Notice were selected for funding through a competition announced in a **Federal Register** notice published on February 26, 2001 (66 FR 11841) for the housing counseling program. Applications submitted for each competition were scored and selected for funding on the basis of selection criteria contained in the Notice. HUD awarded $17.548 million in housing counseling grants to 369 housing counseling agencies nationwide: 340 local agencies, 11 intermediaries, and 18 State housing finance agencies.

Additionally, HUD distributed $734,500 in noncompetitive housing counseling grants. Specifically, $584,500 was awarded to the American Association of Retired Persons (AARP) to provide housing counseling services related to the Home Equity Conversion Program (HECM). HUD also awarded 7 housing counseling grants, totaling $150,000, to provide Native Americans with quality homeownership education and counseling services, and to build the capacity of organizations in Indian Country to provide housing counseling. Noncompetitive awards are announced in Appendix B of this notice.

In accordance with section 102(a)(4)(C) of the Department of Housing and Urban Development Reform Act of 1989 (103 Stat. 1987, 42 U.S.C. 3545), the Department is publishing the names, addresses, and award amounts as provided in Appendix A.

The Catalog of Federal Domestic Assistance number for this program is 14.169.

Dated: December 27, 2001.

John C. Weicher,

Assistant Secretary for Housing-Federal Housing Commissioner.

Appendix A

Competitive/SuperNOFA Grants

Intermediary Organizations (11)

ACORN HOUSING CORPORATION, 846 N. Broad Street, Philadelphia, PA 19130, *Amount Awarded:* $1,032,192.00.

Catholic Charities USA, 1731 King Street, Suite 200, Alexandria, VA 22314, *Amount Awarded:* $971,280.00.

Citizens' Housing and Planning Association, 18 Tremont Street, Suite 401, Boston, MA 02108, *Amount Awarded:* $250,000.00.

Housing Opportunities, Inc., 133 Seventh Avenue, P.O. Box 9, McKeesport, PA 15132, *Amount Awarded:* $1,056,768.00.

National Council of La Raza, 1111 19th Street, NW, Suite 1000, Washington, DC 20036, *Amount Awarded:* $1,081,344.00.

National Foundation for Credit Counseling, 801 Roeder Road, Suite 900, Silver Spring, MD 20910, *Amount Awarded:* $1,155,072.00.

National Urban League, 120 Wall Street, New York, NY 10005, *Amount Awarded: Amount Awarded:* $1,155,072.00.

Neighborhood Reinvestment Corporation, 1325 G Street, NW, Suite 800, Washington, DC 20005–3100, *Amount Awarded:* $1,155,072.00.

The Congress of National Black Churches, Inc., 1225 Eye Street, NW, Suite 750, Washington, DC 20005–3914, *Amount Awarded:* $712,704.00.

The Housing Partnership Network, Inc., 160 State Street, 5th Floor, Boston, MA 02109, *Amount Awarded:* $1,130,496.00.

West Tennessee Legal Services, Inc., 210 West Main Street, P.O. Box 2066, Jackson, TN 38302–2066, *Amount Awarded:* $250,000.00.

State Housing Finance Agencies (18)

Atlanta (SHFA)

Georgia Housing & Finance Authority, 60 Executive Park South, Atlanta, GA 30329–2231, *Amount Awarded:* $64,672.00.
Kentucky Housing Corporation, 1231 Louisville Road, Frankfort, KY 40601, *Amount Awarded:* $49,420.00.
Mississippi Home Corporation, 735 Riverside Drive, P.O. Box 23369, Jackson, MS 39225–3369, *Amount Awarded:* $61,621.00.
South Carolina State Housing Finance & Development Auth., 919 Bluff Road, Columbia, SC 29201, *Amount Awarded:* $58,572.00.
Virgin Islands Housing Finance Authority, 210–3A Altona (Frostco Building, Ste 101, St. Thomas, VQ 00802, *Amount Awarded:* $20,000.00.

Denver (SHFA)

New Mexico Mortgage Finance Authority, 344 4th Street SW, Albuquerque, NM 87102, *Amount Awarded:* $115,000.00.
North Dakota Housing Finance Agency, P.O. Box 1535, Bismarck, ND 58502–1535, *Amount Awarded:* $50,000.00.
South Dakota Housing Development Authority, PO Box 1237, Pierre, SD 57501–1237, *Amount Awarded:* $65,000.00.

Philadelphia (SHFA)

Delaware State Housing Authority, Carvel State Building, 801 North French Street—10th Floor, Wilmington, DE 19801, *Amount Awarded:* $25,722.00.
Maine State Housing Authority, 353 Water Street, Augusta, ME 04330–4633, *Amount Awarded:* $43,967.00.
Maryland Department of Housing and Community Development, 100 Community Place, Crownsville, MD 21032, *Amount Awarded:* $24,063.00.
New Hampshire Housing Finance Authority, P.O. Box 5087, Manchester, NH 03108, *Amount Awarded:* $26,551.00.
Pennsylvania Housing Finance Agency, 2101 North Front St., Harrisburg, PA 17105, *Amount Awarded:* $41,479.00.
Rhode Island Housing & Mortgage Finance Corporation, 44 Washington St., Providence, RI 02903, *Amount Awarded:* $43,967.00.
State of Michigan, 401 S. Washington Square, P.O. Box 30044—MSHDA, Lansing, MI 48909, *Amount Awarded:* $32,357.00.
Virginia Housing Development Authority, 601 S. Belvidere St., Richmond, VA 23220, *Amount Awarded:* $29,039.00.

Santa Ana (SHFA)

Idaho Housing and Finance Association, P.O. BOX 7899, 565 Myrtle, Boise, ID 83707–1899, *Amount Awarded:* $94,191.00.
Washington State Housing Finance Commission, 1000 Second Avenue, Suite 2700, Seattle, WA 98104–1046, *Amount Awarded:* $130,094.00.

Local Organizations (340)

Atlanta (HOC)

Access Living of Metropolitan Chicago, 614 West Roosevelt Road, Chicago, IL 60607, *Amount Awarded:* $26,757.00.
Affordable Housing Coalition, 34 Wall Street, Suite 607, Asheville, NC 28801, *Amount Awarded:* $20,000.00.
Agency Metropolitan Program Services, 3210 W. Arthington Street, Chicago, IL 60624, *Amount Awarded:* $4,146.00.
Alabama Council on Human Relations, P.O. Drawer 1632, 319 West Glenn Avenue, Auburn, AL 36831–1632, *Amount Awarded:* $15,146.00.
Anderson Housing Authority, 528 West 11th Street, Anderson, IN 46016, *Amount Awarded:* $24,312.00.
Appalachian Housing & Redevelopment (Rome Housing Authority, 800 North Fifth Avenue, Rome, GA 30162, *Amount Awarded:* $19,423.00.
Birmingham Urban League, Inc., 1717 4th Avenue North, P.O. Box 11269, Birmingham, AL 35202–1269, *Amount Awarded:* $29,812.00.
C.C.C.S. of Middle Tennessee, Inc., P.O. Box 160328, Nashville, TN 37216–0328, *Amount Awarded:* $4,146.00.
Campbellsville Housing and Redevelopment Authority, P.O. Box 597, 400 Ingram Ave., Campbellsville, KY 42719, *Amount Awarded:* $10,870.00.
Carolina Regional Legal Services, Inc., P.O. Box 479, 279 West Evans Street, Florence, SC 29503–0479, *Amount Awarded:* $32,868.00.
CEFS Economic Opportunity Corporation, 1805 S. Banker Street, P.O. Box 928, Effingham, IL 62401, *Amount Awarded:* $16,979.00.
CEIBA Housing & Economic Development Corporation, Ave. Lauro Pinero #252, P.O. Box 203, Ceiba, PR 00735, *Amount Awarded:* $18,201.00.
Central Florida Community Development Corp., P.O. Box 15065, Daytona Beach, FL 32115, *Amount Awarded:* $12,090.00.
Chicago Commons, 3645 West Chicago Avenue, Chicago, IL 60651, *Amount Awarded:* $19,145.00.
Citizens for Affordable Housing, Inc., 1719 West End Avenue, Suite 607W, Nashville, TN 37203, *Amount Awarded:* $15,757.00.
City of Albany, Georgia, 230 S. Jackson St., Suite 315, Albany, GA 31701, *Amount Awarded:* $5,368.00.
City of Bloomington, P.O. Box 100, 401 North Morton, Bloomington, IN 47402, *Amount Awarded:* $24,925.00.
Cobb Housing, Inc., 700 Sandy Plains Road, Suite B–8, Marietta, GA 30066, *Amount Awarded:* $23,701.00.
Community Action & Community Development Agency, P.O. Box 1788, 207 Commerce Circle, SW, Decatur, AL 35602, *Amount Awarded:* $31,034.00.
Community Action Agency Huntsville/Madison & Limestone, 3516 Stringfield Road, P.O. Box 3975, Huntsville, AL 35810–0975, *Amount Awarded:* $27,979.00.
Community Action Agency of Northwest Al, 745 Thompson Street, Florence, AL 35630, *Amount Awarded:* $9,000.00.
Community Action of Greater Indianapolis, Inc., 2445 North Meridian Street, Indianapolis, IN 46208, *Amount Awarded:* $12,701.00.
Community and Economic Development Assoc. of Cook County, 208 South LaSalle, Suite 1900, Chicago, IL 60604–1001, *Amount Awarded:* $22,479.00.
Community Equity Investments, Inc. (CEII), 302 North Barcelona Street, Pensacola, FL 32501, *Amount Awarded:* $19,000.00.
Consumer Credit Counseling Service of Western NC, 50 South French Broad Ave., Suite 227, Ashville, NC 28801, *Amount Awarded:* $33,479.00.
Consumer Credit Counseling of NWI, Inc., 3637 Grant Street, Gary, IN 46408–1439, *Amount Awarded:* $20,500.00.
Consumer Credit Counseling Service of Family Counseling CEN, 220 Coral Sands Drive, Rockledge, FL 32955, *Amount Awarded:* $18,812.00.
Consumer Credit Counseling Service of FL. Gulf Coast, Inc., 5201 W. Kennedy Blvd., Suite 110, Tampa, FL 33609, *Amount Awarded:* $26,146.00.
Consumer Credit Counseling Service of Forsyth County, Inc., 8064 North Point Boulevard, Suite 204, Winston-Salem, NC 27106, *Amount Awarded:* $31,034.00.
Consumer Credit Counseling Service of South FL, 11645 Biscayne Blvd. #205, No. Miami, FL 33181, *Amount Awarded:* $18,812.00.
Consumer Credit Counseling Service of West Florida, 14 Palafox Place, Pensacola, FL 32501, *Amount Awarded:* $24,312.00.
Cumberland Community Action Program, Inc., P.O. Box 2009, 316 Green Street, Fayetteville, NC 28302, *Amount Awarded:* $30,000.00.
Davidson County Community Action, Inc., P.O. Box 389, 701 South Salisbury Street, Lexington, NC 27293–0389, *Amount Awarded:* $4,146.00.
Dekalb Fulton Housing Counseling Center, Inc., 4151 Memorial Drive, Suite 107–E, Decatur, GA 30032, *Amount Awarded:* $27,979.00.
Dupage Homeownership Center, Inc., 1333 North Main Street, Wheaton, IL 60187, *Amount Awarded:* $28,000.00.
Economic Opportunity for Savannah-Chatham County Area, Inc., 618 West Anderson Street, Savannah, GA 31401, *Amount Awarded:* $22,479.00.
Elizabeth City State University, 1704 Weeksville Road, Campus Box 761, Elizabeth City, NC 27909, *Amount Awarded:* $26,145.00.
Family and Children's Services of Chattanooga, Inc., Osborne Office Park, 6000 Building, Suite 2300, Chattanooga, TN 37411, *Amount Awarded:* $10,868.00.
Family Service Center, 1800 Main Street, Columbia, SC 29201, *Amount Awarded:* $33,479.00.
Fulton-Atlanta Community Action Authority, Inc., 1690 Chantilly Drive, Atlanta, GA 30324, *Amount Awarded:* $18,812.00.
Gainesville/Hall County Neighborhood Revitalization, P.O. Box 642, Gainesville, GA 30503, *Amount Awarded:* $18,812.00.
Gulf Coast Community Action Agency, Inc., 443 Security Square, P.O. Box 519, Gulfport, MS 39502–0519, *Amount Awarded:* $10,868.00.
Gwinnett Housing Resource Partnership, Inc., 3453 Holcomb Bridge Road, Suite 140, Norcross, GA 30092, *Amount Awarded:* $25,534.00.
Hammond Housing Authority, 7329 Columbia Circle—West, Hammond, IN 46324, *Amount Awarded:* $27,979.00.

Homes in Partnership, Inc., 235 E. Fifth Street, P. O. Box 761, Apopka, FL 32704–0761, *Amount Awarded:* $23,701.00.
Hoosier Uplands Economic Development Corporation, 521 West Main Street, Mitchell, IN 47446, *Amount Awarded:* $15,000.00.
Hope of Evansville, Inc., 608 Cherry Street, Evansville, IN 47713, *Amount Awarded:* $25,534.00.
Housing and Economic Leadership Partners, Inc., 485 Huntington Road, Suite 200, Athens, GA 30606, *Amount Awarded:* $21,868.00.
Housing and Neighborhood Dev. Serv of Central Florida, 990 North Bennett Avenue, Winter Park, FL 32789, *Amount Awarded:* $20,034.00.
Housing Authority of the Birmingham District, 1826 3rd Avenue South, Birmingham, AL 35233, *Amount Awarded:* $24,312.00.
Housing Authority of the City of Fort Wayne, P.O. Box 13489, 2013 South Anthony Blvd., Fort Wayne, IN 46869–3489, *Amount Awarded:* $27,979.00.
Housing Authority of the City of High Point, 500 East Russell Avenue, Post Office Box 1779, High Point, NC 27260, *Amount Awarded:* $24,923.00.
Housing Authority of the County of Lake, IL, 33928 North Route 45, Grayslake, IL 60030, *Amount Awarded:* $5,979.00.
Housing Development Corporation of St. Joseph County, 1200 County City Building, South Bend, IN 46601, *Amount Awarded:* $20,672.00.
Housing Education and Economic Development, 3405 Medgar Evers Blvd., Jackson, MS 39213, *Amount Awarded:* $10,868.00.
Johnston-Lee Community Action, Inc., P.O. Drawer 711, 1102 Massey Street, Smithfield, NC 27577, *Amount Awarded:* $20,000.00.
Knoxville Legal Aid Society, Inc., 502 S. Gay Street, Suite 404, Knoxville, TN 37902, *Amount Awarded:* $16,979.00.
Lake County, 2293 North Main Street, Crown Point, IN 46307, *Amount Awarded:* $18,201.00.
Latin American Association, 2665 Buford Highway, Atlanta, GA 30324, *Amount Awarded:* $22,479.00.
Latin United Community Housing Association, 3541 W. North Avenue, Chicago, IL 60647, *Amount Awarded:* $31,646.00.
Legal Assistance Foundation of Chicago, 111 West Jackson Blvd., Chicago, IL 60604, *Amount Awarded:* $27,368.00.
Legal Services of Upper East TN, Inc., 311 West Walnut Street, P.O. Drawer 360, Johnson City, TN 37605–0360, *Amount Awarded:* $24,312.00.
Lincoln Hills Development Corporation, 302 Main Street, P.O. Box 336, Tell City, IN 47586, *Amount Awarded:* $10,000.00.
Louisville Urban League, 1535 West Broadway, Louisville, KY 40203, Amount Awarded: $25,534.00.
Manatee Coalition for Affordable Housing, Inc., 319 6th Avenue West, Bradenton, FL 34205, *Amount Awarded:* $17,590.00.
Manatee Opportunity Council, Inc., 369 6th Avenue West, Bradenton, FL 34205, *Amount Awarded:* $13,312.00.
Memphis Area Legal Services, 109 N. Main, 2 Floor, Memphis, TN 38103–5013, *Amount Awarded:* $20,034.00.
Miami Beach Community Development Corporation, 1205 Drexel Avenue, Miami Beach, FL 33139, *Amount Awarded:* $18,812.00.
Mid-Florida Housing Partnership, Inc., P.O. Box 1345, 330 North Street, Daytona Beach, FL 32115, *Amount Awarded:* $18,812.00.
Mobile Housing Board, 151 South Claiborne Street, P. O. Box 1345, Mobile, AL 36633–1345, *Amount Awarded:* $31,646.00.
Muncie Homeownership and Development Center, 407 South Walnut Street, Muncie, IN 47305, *Amount Awarded:* $14,750.00.
Northeastern Community Development Corp., P.O. Box 367, Camden, NC 27921, *Amount Awarded:* $14,534.00.
Northwestern Regional Housing Authority, P.O. Box 2510, Hwy. 105 Ext., Boone, NC 28607, *Amount Awarded:* $31,646.00.
Ocala Housing Authority, 233 S.W. 3RD Street, Ocala, FL 34474, *Amount Awarded:* $25,000.00.
Palmetto Legal Services, 2109 Bull Street, P.O. Box 2267, Columbia, SC 29202, *Amount Awarded:* $5,368.00.
Purchase Area Housing Corporation, P.O. Box 588, Mayfield, KY 42066, *Amount Awarded:* $15,000.00.
Realtor-Community Housing Foundation, 2250 Regency Road, Lexington, KY 40503, *Amount Awarded:* $8,423.00.
Residential Resources, Inc., 602 Gallatin Road, Suite 102, Nashville, TN 37206, *Amount Awarded:* $18,201.00.
Rogers Park Community Council, 1530 W. Morse Avenue, Chicago, IL 60626, *Amount Awarded:* $14,534.00.
Sacred Heart Southern Missions Housing Corp., 6144 Highway 161 North, P.O. Box 365, Walls, MS 38680, *Amount Awarded:* $21,257.00.
Sandhills Community Action Program, Inc., P.O. Box 937, 103 Saunders Street, Carthage, NC 28327–0000, *Amount Awarded:* $20,646.00.
South Suburban Housing Center, 18220 Harwood Avenue, Suite 1, Homewood, IL 60430, *Amount Awarded:* $19,423.00.
Spanish Coalition for Housing, 4035 West North Avenue, Chicago, IL 60639, *Amount Awarded:* $31,646.00.
Tallahassee Urban League, Inc., 923 Old Bainbridge Road, Tallahassee, FL 32303, *Amount Awarded:* $7,812.00.
Tenant Services & Housing Counseling, Inc., 136 North Martin Luther King Blvd., Lexington, KY 40507, *Amount Awarded:* $30,000.00.
The Agricultural & Labor Program, Inc., P.O. Box 3126, Winter Haven, FL 33885, *Amount Awarded:* $3,535.00.
The Housing Authority of the City of Montgomery, 1020 Bell Street, Montgomery, AL 36104, *Amount Awarded:* $33,479.00.
Trident United Way, 6296 Rivers Avenue, P. O. Box 63305, North Charleston, SC 29419, *Amount Awarded:* $18,812.00.
Twin Rivers Opportunities, Inc., P.O. Box 1482, New Bern, NC 28563, *Amount Awarded:* $9,600.00.
Unified Government of Athens-Clarke County, 155 E. Washington St., P.O. Box 1868, Athens, GA 30603, *Amount Awarded:* $18,812.00.
Urban League of Greater Columbus, 802 First Avenue, Columbus, GA 31901, *Amount Awarded:* $27,979.00.
Wateree Community Action, Inc., Post Office Box 1838, 13 South Main Street, Sumter, SC 29150, *Amount Awarded:* $10,000.00.
West Perrine Community Development Corporation, 17623 Homestead Avenue, Miami, FL 33157, *Amount Awarded:* $19,423.00.
Willow Nonprofit Housing, Inc., P. O. Box 383, 200 A Commerce Street, Hayneville, AL 36040, *Amount Awarded:* $30,000.00.
Wilson Community Improvement Association, Inc., 504 E. Green Street, Wilson, NC 27893, *Amount Awarded:* $15,146.00.
Woodbine Community Organization, 222 Oriel Avenue, Nashville, TN 37210, *Amount Awarded:* $16,368.00.

Denver (HOC)

Adams County Housing Authority, 7190 Colorado Blvd., Commerce City, CO 80022, *Amount Awarded:* $29,692.00.
Anoka County Community Action Programs, Inc., 1201 89th Avenue NE, Suite 345, Anoka County, Blaine, MN 55343, *Amount Awarded:* $4,203.00.
Avenida Guadalupe Association, 1327 Guadalupe Street, San Antonio, TX 78207, *Amount Awarded:* $18,579.00.
Better Family Life, Inc., 724 North Union, Suite 301, St. Louis, MO 63108, *Amount Awarded:* $20,061.00.
Black Hills Legal Services, Inc., P.O. Box 1500, Rapid City, SD 57709–1500, *Amount Awarded:* $20,000.00.
Boulder County Housing Authority, P.O. Box 471, Boulder, CO 80306, *Amount Awarded:* $28,950.00.
Brothers Redevelopment, Inc., 2250 Eaton St., Garden Level, Suite B, Denver, CO 80214, *Amount Awarded:* $19,541.00.
Carver County Housing & Redevelopment Authority, 705 Walnut Street, Chaska, MN 55318, *Amount Awarded:* $7,687.00.
CCCS of Central Oklahoma, Inc., 3230 N. Rockwell Avenue, Bethany, OK 73008, *Amount Awarded:* $32,359.00.
CCCS of Greater Dallas, Inc., 8737 King George Dr., Suite 200, Dallas, TX 75235, *Amount Awarded:* $38,805.00.
CCCS of Greater San Antonio, 6851 Citizens Parkway, Suite 100, San Antonio, TX 78229, *Amount Awarded:* $7,687.00.
CCCS of Salina, 1201 West Walnut, Salina, KS 67401, *Amount Awarded:* $19,541.00.
Cedar City Housing Authority, 364 South 100 East, Cedar City, UT 84720, *Amount Awarded:* $3,172.00.
Center for A.I.D./CCCS of Greater Siouxland, 715 Douglas Street, Sioux City, IA 51101, *Amount Awarded:* $16,578.00.
Central City Housing Development Corp., 2020 Jackson Avenue, New Orleans, LA 70113, *Amount Awarded:* $7,687.00.
Chickasaw Nation, Division of Housing, P.O. Box 788, Ada, OK 74821–0788, *Amount Awarded:* $12,873.00.
City of Aurora—Home Ownership Assistance Program, 9801 E. Colfax Ave., Aurora, CO 80010, *Amount Awarded:* $19,205.00.
City of Des Moines (Services for Homeowner's Program (Shop)),

Department of Community Development, 602 East 1st Street, Des Moines, IA 50309–1881, *Amount Awarded:* $4,723.00.
City of Fort Worth, Housing Department, 1000 Throckmorton Street, Fort Worth, TX 76102, *Amount Awarded:* $30,655.00.
City of San Antonio, 115 Plaza de Armas, Suite 230, San Antonio, TX 78205, *Amount Awarded:* $30,433.00.
City Vision Ministries, Inc., 1321 N. 7th Street, Kansas City, KS 66101, *Amount Awarded:* $3,241.00.
Colorado Housing Enterprises/Colorado Rural Housing Dev Corp, 3621 West 73rd Avenue, Suite C, Westminster, CO 80030, *Amount Awarded:* $3,241.00.
Community Action Agency of Oklahoma City and OK/CN Counties, 1900 NW 10th Street, Oklahoma City, OK 73106, *Amount Awarded:* $18,466.00.
Community Aaction for Suburban Hennepin, 33 10th Avenue South, Suite 150, Hopkins, MN 55343, *Amount Awarded:* $27,691.00.
Community Action Project of Tulsa County, 717 S. Houston Ave, Suite 200, Tulsa, OK 74127, *Amount Awarded:* $22,283.00.
Community Action Services, 257 East Center Street, Provo, UT 84606, *Amount Awarded:* $26,500.00.
Community Action, Inc. of Rock and Walworth Counties, 2300 Kellog Avenue, Janesville, WI 53546, *Amount Awarded:* $12,000.00.
Community Development Authority of the City of Madison, 215 Martin Luther King Jr Blvd, Ste 318, P.O. Box 1785, Madison, WI 53701–1785, *Amount Awarded:* $31,618.00.
Community Development Corporation of Brownsville, 1150 E. Adams St., Second Floor, Brownsville, TX 78520, *Amount Awarded:* $33,841.00.
Community Development Support Association (CDSA), 2615 E. Randolph, Enid, OK 73701, *Amount Awarded:* $17,540.00.
Community Services League, 300 W. Maple, P.O. Box 4178, Independence, MO 64051, *Amount Awarded:* $25,690.00.
Crawford-Sebastian Community Development Council, Inc., 4831 Armour, P.O. Box 4069, Fort Smith, AR 72914, *Amount Awarded:* $16,876.00.
Crowley's Ridge Development Council, Inc., 249 S. Main, P.O. Box 1497, Jonesboro, AR 72401, *Amount Awarded:* $13,836.00.
Dallas Urban League, 4315 South Lancaster Road, Dallas, TX 75216, *Amount Awarded:* $9,688.00.
District 7 Human Resources Development Council 7 North 31st Street, P.O. Box 2016, Billings, MT 59103 *Amount Awarded:* $16,800.00.
E'TRAD (Education, Training, Research and Development) 608 E. Cherry Street, Suite 101, P.O. Box 10298, Columbia, MO 65201 *Amount Awarded:* $14,874.00.
East Arkansas Legal Services, 2126 E. Broadway, P.O. Box 1149, West Memphis, AR 72303, *Amount Awarded:* $17,540.00.
Family Housing Advisory Services, Inc., 2416 Lake Street, Omaha, NE 68111, *Amount Awarded:* $38,805.00.
Family Life Center/Utah State University, 493 North 700 East, Logan, UT 84321, *Amount Awarded:* $11,391.00.
Family Management Credit Counselors, Inc. (FMCCI), 1409 W. 4th Street, Waterloo, IA 50702, *Amount Awarded:* $10,000.00.
Family Service Agency, 4504 Burrow Drive, P.O. Box 16615, North Little Rock, AR 72231–6615, *Amount Awarded:* $26,951.00.
Greater Kansas City Housing Information Center, 3810 Paseo, Kansas City, MO 65109–2721, *Amount Awarded:* $38,583.00.
Gulf Coast Community Services Association, 5000 Gulf Freeway Building #1, Houston, TX 77023, *Amount Awarded:* $3,760.00.
Hawkeye Area Community Action Program, Inc., 1515 Hawkeye Drive, P.O. Box 490, Hiawatha, IA 52233–0490, *Amount Awarded:* $23,987.00.
High Plains Community Development Corp. Inc., 130 East Second Street, Chadron, NE 69337, *Amount Awarded:* $27,173.00.
Housing and Credit Counseling, Inc., 1195 SW Buchanan, Suite 101, Topeka, KS 66604–1183, *Amount Awarded:* $24,209.00.
Housing Authority of the City of Lawton, OK, 609 Southwest F Avenue, Lawton, OK 73501, *Amount Awarded:* $3,241.00.
Housing Authority of the City of Muskogee 220 North 40th Street, Muskogee, OK 74401, *Amount Awarded:* $30,655.00.
Housing Authority of the City of Stillwater, 807 S. Lowry, Stillwater, OK 74074, *Amount Awarded:* $2,500.00.
Housing Options Provided for the Elderly, 4265 Shaw Avenue, St. Louis, MO 63110, *Amount Awarded:* $10,000.00.
Housing Partners of Tulsa, Inc., P.O. Box 6369, Tulsa, OK 74148, *Amount Awarded:* $32,137.00.
In Affordable Housing, Inc., 1200 John Barrow Rd., Ste 109, Little Rock, AR 72205, *Amount Awarded:* $13,836.00.
Interfaith of Natrona County, Inc., 1514 East #12th Street, #303, Casper, WY 82601, *Amount Awarded:* $10,000.00.
Justine Petersen Housing & Reinvestment Corp., 5031 Northrup, St. Louis, MO 63110, *Amount Awarded:* $24,950.00.
Lafayette Consolidated Government, P.O. Box 4017–C, Lafayette, LA 70502–4017, *Amount Awarded:* $15,837.00
Legal Aid of Central Texas, 2201 Post Road, Suite 104, Austin, TX 78704, *Amount Awarded:* $37,102.00.
Legal Aid Society of Albuquerque, Inc., 121 Tijeras NE, Suite 3100, Albuquerque, NM 87125–5486, *Amount Awarded:* $27,173.00.
Legal Services of Eastern Missouri, Inc., 4232 Forest Park Avenue, St. Louis, MO 63108, *Amount Awarded:* $17,540.00.
Lincoln Action Program, Inc., 210 O Street, Lincoln, NE 68508, *Amount Awarded:* $29,174.00.
Marshall Housing Authority, 1401 Poplar Street, P.O. Box 609, Marshall, TX 75671, *Amount Awarded:* $3,463.00.
Neighbor to Neighbor, Inc., 424 Pine Street, Suite 203, Fort Collins, CO 80524, *Amount Awarded:* $22,505.00.
Norman Housing Authority, 700 N. Berry Rd., Norman, OK 73069, *Amount Awarded:* $20,282.00.
North Louisiana Legal Assistance Corporation, 200 Washington Street, P.O. Box 3325, Monroe, LA 71201, *Amount Awarded:* $26,210.00.
Northeast Denver Housing Center, 1735 Gaylord St., Denver, CO 80206, *Amount Awarded:* $5,242.00.
Northeast Kansas Community Action Program (NEK-CAP, Inc.), Community Services Department, P.O. Box 380, Hiawatha, KS 66434, *Amount Awarded:* $9,168.00.
Northwest Montana Human Resources, Inc., 214 Main, P.O. Box 8300, Kalispell, MT 59904–1300, *Amount Awarded:* $3,241.00.
Oglala Sioux Tribe Partnership for Housing, Inc., P.O. Box 3001, Pine Ridge, SD 57770, *Amount Awarded:* $11,613.00.
Our Casas Resident Council, Inc., 3006 Guadalupe Street, San Antonio, TX 78207, *Amount Awarded:* $3,463.00.
Parish of Jefferson, Community Action Programs (JEFFCAP), 1221 Elmwood Park Blvd., Suite 402, Jefferson, LA 70123, *Amount Awarded:* $19,541.00.
Senior Housing, Inc., 2021 East Hennipin, Minneapolis, MN 55413, *Amount Awarded:* $24,950.00.
Southeastern North Dakota Community Action Agency, 3233 South University Drive, P.O. Box 2683, Fargo, ND 58104, *Amount Awarded:* $14,000.00.
Southern Minnesota Regional Legal Service, 700 Minnesota Building, 46 East Fourth Street, St. Paul, MN 55101, *Amount Awarded:* $19,319.00.
Southwest Community Resources, 295 Girard Street, Durango, CO 81301, *Amount Awarded:* $5,686.00.
St. Martin, Iberia, Lafayette Community Action Agency, Inc., 501 St. John Street, P.O. Box 3343, Lafayette, LA 70502, *Amount Awarded:* $20,802.00.
St. Mary Community Action Committee Assoc., Inc., P.O. Box 271, Franklin, LA 70538, *Amount Awarded:* $5,983.00.
St. Paul Housing Information Office, 25 West Fourth Street, Room 150, St. Paul, MN 55102, *Amount Awarded:* $21,764.00.
St. Paul Urban League, 401 Selby Avenue, St. Paul, MN 55102, *Amount Awarded:* $26,431.00.
Summit Housing Authority, 106 N. Ridge Street, P.O. Box 188, Breckenridge, CO 80424, *Amount Awarded:* $3,241.00.
Tarrant County Housing Partnership, Inc., 603 West Magnolia Ave, Suite 207, Ft. Worth, TX 76104, *Amount Awarded:* $3,241.00.
Universal Housing Development Corp., P.O. Box 846, Russellville, AR 72811, *Amount Awarded:* $24,728.00.
Urban League of Wichita, Inc., 1802 East 13th Street N., Wichita, KS 67214, *Amount Awarded:* $4,501.00.
Walker's Point Development Corp, 914 S. 5th Street, Milwaukee, WI 53204, *Amount Awarded:* $8,947.00.
West Central Missouri Community Action Agency, 106 W. 4th, P.O. Box 125, Appleton City, MO 64724, *Amount Awarded:* $35,620.00.
Women's Opportunity & Resource Development, 127 N. Higgins, Missoula, MT 59802, *Amount Awarded:* $6,426.00.

Philadelphia (HOC)

Affordable Homes of Millville Ecumenical (AHOME), Inc., P.O. Box 241, Millville, NJ 08332, *Amount Awarded:* $17,340.00.

Albany County Rural Housing Alliance, Inc., P.O. Box 407, 24 Martin Road, Voorheesville, NY 12186, *Amount Awarded:* $18,376.00.

Anne Arundel Co. Economic Opportunity Committee, Inc., 251 West Street, Annapolis, Anne Arundel, MD 21401, *Amount Awarded:* $10,779.00.

Arundel Community Development Services, Inc., 2660 Riva Road, Suite 210, Annapolis, MD 21401, *Amount Awarded:* $19,800.00.

Asian Americans for Equality, Inc., 111 Division Street, New York, NY 10002, *Amount Awarded:* $18,721.00.

Bayfront Nato, Inc., 312 Chestnut Street, Erie, PA 16507, *Amount Awarded:* $3,078.00.

Belmont Shelter Corporation, 1195 Main Street, Buffalo, NY 14209–2196, *Amount Awarded:* $19,425.00.

Berks Community Action Program/Budget Counceling Center, Post Office Box 22, Berks County, Reading, PA 19603–0022, *Amount Awarded:* $19,425.00.

Better Housing League of Greater Cinti, 2400 Reading Road, Cincinnati, OH 45202, *Amount Awarded:* $18,376.00.

Better Neighborhoods Incorporated, 986 Albany Street, Schenectady, NY 12307, *Amount Awarded:* $20,500.00.

Bishop Sheen Ecumenical Housing Foundation, Inc., 935 East Avenue, Suite 300, Rochester, NY 14607, *Amount Awarded:* $15,268.00.

Burlington County Community Action Program, 718 Route 130 South, Burlington, NJ 08016, *Amount Awarded:* $14,578.00.

Catholic Charities, Diocese of Metuchen, 540–550 Route 22 East, Brigewater, Somerset, NJ 08807, *Amount Awarded:* $14,923.00.

Center City Neighborhood Development Corporation, 1824 Main Street, Niagara Falls, NY 14305, *Amount Awarded:* $20,500.00.

Chautauqua Opportunities, Inc., 17 West Courtney Street, Dunkirk, NY 14048, *Amount Awarded:* $20,500.00.

Chester Community Improvement Project, 412 Avenue of the States, Chester, PA 19016, *Amount Awarded:* $20,150.00.

Citizen Action of New Jersey, 400 Main Street, Hackensack, NJ 07601, *Amount Awarded:* $19,425.00.

City of Frederick, 100 South Market Street, Frederick County, Frederick, MD 21701, *Amount Awarded:* $8,000.00.

Coastal Enterprises, Inc., 36 Water Street, P.O. Box 268, Wiscasset, ME 04578, *Amount Awarded:* $20,150.00.

Commission on Economic Opportunity, 165 Amber Lane, Wilkes-Barre, PA 18703, *Amount Awarded:* $19,067.00.

Communities Organized to Improve Life: CEDC, 11 South Carrollton Avenue, Baltimore, MD 21223, *Amount Awarded:* $4,909.00.

Community Access Unlimited, Inc., 80 West Grand Street, Elizabeth, NJ 07202, *Amount Awarded:* $8,016.00.

Community Action Commission of Belmont CTY, 410 Fox-Shannon Place, St. Clairsville, OH 43950, *Amount Awarded:* $4,563.00.

Community Action Commission of Fayette County, Inc., 324 East Court Street, Fayette County, OH 43160, *Amount Awarded:* $12,851.00.

Community Action Committee of the Lehigh Valley, Inc., 651 East Broad Street, Bethlehem, PA 18018, *Amount Awarded:* $16,649.00.

Community Action Program Madison County, 3 East Main Street, P.O. Box 249, Morrisville, NY 13408, *Amount Awarded:* $18,721.00.

Community Action Southwest, 315 East Hallam Avenue, Washington, PA 15301, *Amount Awarded:* $17,000.00.

Community Assistance Network, Inc., 7701 Dunmanway, Baltimore, MD 21222, *Amount Awarded:* $18,721.00.

Community Development Corporation of Long Island, 2100 Middle Country Road, Centereach, NY 11720, *Amount Awarded:* $19,067.00.

Community Housing, Inc., 613 Washington Street, Wilmington, DE 19801, *Amount Awarded:* $14,578.00.

Consumer Credit Counseling Service of Greater Washington, 15847 Crabbs Branch Way, Rockville, MD 20855, *Amount Awarded:* $12,506.00.

Cortland Housing Assistance Council, Inc., 159 Main Street, Cortland, NY 13045, *Amount Awarded:* $12,000.00.

County Commissioners of Carroll County, 10 Distillery Drive, Suite 101, Westminster, MD 21157–5194, *Amount Awarded:* $18,721.00.

Credit Counseling Centers, Inc., 111 Westcott Road, South Portland, ME 04106, *Amount Awarded*: $19,800.00.

Cypress Hills Local Development Corp., 625 Jamaica Avenue, Kings County, Brooklyn, NY 11208, *Amount Awarded*: $19,425.00.

Detroit Non-Profit Housing Corporation, 1200 Sixth Street Suite 404, Detroit, MI 48226, *Amount Awarded*: $15,268.00.

Druid Heights Community Development Corporation, 1821 Mc Culloh Street, Baltimore, MD 21217, *Amount Awarded*: $10,434.00.

Fair Housing Contact Service, 333 South Main Street—Suite 300, Akron, OH 44308, *Amount Awarded*: $6,290.00.

Family Service—Upper Ohio Valley, 51 Eleventh Street, Wheeling, WV 26003, *Amount Awarded*: $12,160.00.

Fayette County Community Action Agency, Inc., 137 N. Beeson Avenue, Uniontown, PA 15401, *Amount Awarded*: $15,000.00.

First State Community Action Agency, Inc., 308 North Railroad Avenue, P.O. Box 877, Georgetown, DE 19947, *Amount Awarded*: $15,268.00.

Garfield Jubilee Association, Inc., 5138 Penn Avenue, Pittsburgh, PA 15224, *Amount Awarded*: $15,000.00.

Greater Boston Leagal Services, Inc., 197 Friend Street, Boston, MA 02114, *Amount Awarded*: $20,150.00.

Greater Erie Community Action Committee, 18 West 9th Street, Erie, PA 16501, *Amount Awarded*: $2,500.00.

Hampton Redevelopment & Housing Authority, P.O. Box 280, 22 Lincoln Street, Hampton, VA 23669, *Amount Awarded*: $8,016.00.

Harford County, 15 South Main Street—Suite 106, Harford County, Bel Air, MD 21014, *Amount Awarded*: $15,959.00.

Harlem Park Revitalization Corporation, 1017 Edmondson Avenue, Baltimore, MD 21223, *Amount Awarded*: $12,160.00.

Hispanic American Organization, 136 S. 4th Street, Allentown, PA 18102, *Amount Awarded*: $14,232.00.

Home Partnership, Inc., 1221 B Brass Mill Road, Belcamp, MD 21017, *Amount Awarded*: $11,470.00.

Housing Association of Delaware Valley, 1500 Walnut Street, Suite 601, Philadelphia, PA 19102, *Amount Awarded*: $10,434.00.

Housing Authority of the County of Butler, 114 Woody Drive, Butler, PA 16001, *Amount Awarded*: $16,649.00.

Housing Coalition of Central Jersey, 78 New Street, New Brunswick, NJ 08901, *Amount Awarded*: $14,923.00.

Housing Consortium for Disabled Individuals, 4040 Market Street, Philadelphia, PA 19104, *Amount Awarded*: $16,995.00.

Housing Council Of York, Inc., 116 North George Street, York County, York, PA 17401, *Amount Awarded*: $19,425.00.

Housing Counseling Services, Inc., 2430 Ontario Road N.W., Washington, DC 20009, *Amount Awarded:* $14,232.00.

Housing Initiative Partnership, Inc., 4310 Gallatin Street, 3rd Floor, Hyattsville, MD 20781, *Amount Awarded*: $17,685.00.

Housing Opportunity Made Equal, 2201 West Broad St—Suite 200, Richmond, VA 23220, *Amount Awarded*: $20,500.00.

Housing Partnership for Morris County, Inc., 22 East Blackwell Street, Dover, NJ 07801, *Amount Awarded*: $20,150.00.

Isles Inc., 10 Wood Street, Trenton, NJ 08618, *Amount Awarded*: $16,304.00.

Jamaica Housing Improvement, Inc 161–10 Jamaica Avenue, Suite 601, Jamaica, NY 11432, *Amount Awarded*: $19,067.00.

Jersey Counseling and Housing Development, Inc., 1840 South Broadway, Camden City, NJ 08104, *Amount Awarded*: $8,362.00.

Kanawha Institute for Social Research and Action, 124 Marshall Avenue, Dunbar, WV 25064, *Amount Awarded*: $20,500.00.

Long Island Housing Services, Inc., 3900 Veterans Memorial Highway-Suite 251, Bohemia, NY 11716, *Amount Awarded*: $20,500.00.

Lutheran Housing Corporation, 13944 Euclid Avenue, Suite 208, East Cleveland, OH 44112, *Amount Awarded*: $10,779.00.

Lynchburg Community Action Group, Inc, 926 Commerce Street, Lynchburg, VA 24504, *Amount Awarded*: $16,649.00.

Margert Community Corporation, 1931 Mott Avenue, Room 412, Far Rockaway, NY 11691, *Amount Awarded:* $19,067.00.

Marshall Heights Community Dev., Org, 3939 Benning Road NE, Washington, DC 20019, *Amount Awarded*: $19,067.00.

Maryland Rural Development Corporation, P.O. Box 4848, Annapolis, MD 21403, *Amount Awarded*: $15,613.00.

Metro Interfaith Services, Inc, 21 New Street, Binghamton, NY 13903, *Amount Awarded*: $10,000.00.

Michigan Housing Counselors, Inc., 237 S.B. Gratiot Avenue, Mt. Clemens, MI 48043, *Amount Awarded*: $15,959.00.

Middle East Community Development Corp., 730 North Collington Avenue, Baltimore, MD 21205, *Amount Awarded*: $13,196.00.
Monmouth County Board of Chosen Freeholders, P.O. Box 1255, Freehold, NJ 07728, *Amount Awarded*: $14,578.00.
NCALL Research, Inc., 20 East Division Street, P.O. Box 1092, Dover, DE 19903–1092, *Amount Awarded*: $19,425.00.
Near Northeast Community Improvement Corporation, 1326 Florida Avenue—N.E., Washington, DC 20002, *Amount Awarded*: $17,685.00 .
Neighborhood House, Inc., 1218 B Street, New Castle County, Wilmington, DE 19801, *Amount Awarded*: $14,578.00.
Neighborhood Housing Services of New Britain, Inc, 223 Broad Street, New Britian, CT 06053, *Amount Awarded*: $17,340.00.
Neighborhood Housing Services of NYC, 121 W. 27th Street, 4th Floor, New York, NY 10001, *Amount Awarded*: $19,067.00.
Neighbors Helping Neighbors, Inc., 443 39th Street, Brooklyn, NY 11232, *Amount Awarded*: $19,425.00.
Northfield Community LDC of SI, Inc., 160 Heberton Avenue, Staten Island, NY 10302, *Amount Awarded*: $19,425.00.
Northwest Counseling Service, Inc., 5001 North Broad Street, Philadelphia, PA 19141, *Amount Awarded*: $17,685.00.
Oakland County Michigan, 1200 North Telegraph Road Oakland County, Pontiac, MI 48341–9901, *Amount Awarded*: $13,542.00.
Office of Human Affairs, 6060 Jefferson Avenue, Suite 12C, P.O. Box 37, Newport News, VA 23607, *Amount Awarded*: $11,470.00.
Open Housing Center, Inc., 45 John Street, Suite #308, New York, NY 10038, *Amount Awarded*: $17,340.00.
Opportunities for Chenango, Inc., P.O. Box 470, 44 West Main Street, Norwich, NY 13815–0470, *Amount Awarded*: $11,280.00.
People Incorporated of Southwest Virginia, 1173 West Main Street, Abington, VA 24210,*Amount Awarded*: $10,000.00.
Philadelphia Council for Community Advancement, 100 North 17th Street, Suite 700, Philadelphia, PA 19107, *Amount Awarded*: $19,425.00.
Phoenix Non-Profit Housing Corp., 1640 Porter Street, Detroit, MI 48216, *Amount Awarded*: $5,599.00.
Piedmont Housing Alliance, 515 Park Street, Charlottesville, VA 22902, *Amount Awarded*: $14,578.00.
Plymouth Redevelopment Authority, 11 Lincoln Street, Plymouth, MA 02360, *Amount Awarded*: $20,500.00.
Prince William County, 8033 Ashton Avenue, Suite 105, Manassas, VA 20109, *Amount Awarded*: $18,721.00.
Putnam County Housing Corporation, 11 Seminary Hill Road, Carmel, NY 10512, *Amount Awarded*: $20,500.00.
Quincy Community Action Programs, Inc., 1509 Hancock Street, Norfolk County, Quincy, MA 02169, *Amount Awarded*: $10,500.00.
Rockland Housing Action Coalition, Inc, 747 Chestnut Street, Chestnut Ridge, NY 10977, *Amount Awarded*: $19,425.00.
Rural Sullivan County Housing Opp., Inc, P.O. Box 1497, Monticello, NY 12701, *Amount Awarded*: $15,000.00.
Rural Ulster Preservation Company, Inc., 289 Fair Street, Ulster County, Kingston, NY 12401, *Amount Awarded*: $18,000.00.
Schuylkill Community Action, 225 North Centre Street, Pottsville, PA 17901, *Amount Awarded:* $18,000.00.
Senior Citizens United Community Services of CC, Inc, 146 Black Horse Pike, Mt. Ephraim, NJ 08059, *Amount Awarded:* $15,268.00.
Shore Up!, Inc., 520 Snow Hill Road, P.O. Box 430, Salisbury, MD 21803, *Amount Awarded:* $15,613.00.
Skyline Cap, Inc, P.O. Box 588, Madison, VA 22727, *Amount Awarded:* $8,362.00.
Somerset County Coalition on Affordable Housing, One West Main Street, 2nd Floor, Somerville, NJ 08876, *Amount Awarded:* $18,376.00.
Southern Maryland Tri-County Community Action Committee, Inc, P.O. Box 280, Hughesville, MD 20637, *Amount Awarded:* $11,124.00.
Southside Community Development & Housing Corp., 1624 Hull Street, Richmond, VA 23224, *Amount Awarded:* $10,088.00.
St. Ambrose Housing Aid Center, 321 East 25th Street, Baltimore, MD 21218, *Amount Awarded:* $20,500.00.
St. James Community Development Corporation, 260 Broadway, Suite 300, Newark, NJ 07104, *Amount Awarded:* $10,088.00.
Tabor Community Services Inc, 439 East King St., Lancaster, PA 17602, *Amount Awarded:* $19,425.00.
Telamon Corporation, 4913 Fithzhugh Avenue, Suite 202, Richmond, VA 23230, *Amount Awarded:* $13,887.00.
The Housing Council in the Monroe County Area., 183 East Main Street, Suite 1100, Rochester, NY 14604, *Amount Awarded:* $20,150.00.
The Southeastern Tidewater Opportunity Project, Inc., 2551 Almeda Avenue, Norfolk, VA 23513, *Amount Awarded:* $8,016.00.
The Trehab Center, 10 Public Avenue, P.O. Box 366, Montrose, PA 18801, *Amount Awarded:* $19,425.00.
Total Action Against Poverty (TAP), 145 Campbell Avenue, S.W., Roanoke, VA 24001–2868, *Amount Awarded:* $17,340.00.
Trcil Services, Inc., 900 Rebecca Avenue, Wilkinsburg, PA 15221, *Amount Awarded:* $8,362.00.
Tri-Churches Housing, Inc., 815 Scott Street, Baltimore, MD 21230, *Amount Awarded:* $15,000.00.
Tri-County Community Action Agency, Inc., 110 Cohansey Street, Bridgeton, NJ 08302, *Amount Awarded:* $8,707.00.
United Neighborhood Centers of Lackawanna County, Inc., 410 Olive Street, Scranton, PA 18509, *Amount Awarded:* $14,923.00.
Universal Credit Consulting Services, Inc., 531 Market Street, Zanesville, OH 43701–3610, *Amount Awarded:* $8,016.00.
University Legal Services, 300 I Street, NE, Suite 202, Washington, DC 20002, *Amount Awarded:* $18,376.00.
Urban League of Rhode Island, Inc., 246 Prairie Avenue, Providence County, Providence, RI 02905, *Amount Awarded:* $19,425.00.
Urban League of Union County, Inc., 272 North Broad St., Elizabeth, NJ 07207, *Amount Awarded:* $12,506.00.
Washington County Community Action Council, Inc., 101 Summit Avenue, Hagerstown, MD 21740, *Amount Awarded:* $15,954.00.
Washtenaw Homebuyers Program, 2301 Platt Road, Ann Arbor, MI 48014, *Amount Awarded:* $3,873.00.
Westchester Residential Opportunities, Inc, 470 Mamaroneck Avenue, Suite 410, White Plains, NY 10605, *Amount Awarded:* $20,500.00.
YWCA of New Castle County, 233 King Street, Wilmington, DE 19801, *Amount Awarded:* $19,425.00.

Santa Ana (HOC)

Administration of Resources and Choices, 209 South Tucson Blvd., P.O. Box 86802, Tucson, AZ 85754, *Amount Awarded:* $22,655.00.
CCCS of Alaska, 208 East 4th Avenue, Anchorage, AK 99501, *Amount Awarded:* $46,422.00.
CCCS of Central Valley Inc., 4969 E. McKinley, Suite #107, Fresno, CA 93727, *Amount Awarded:* $41,260.00.
CCCS of East Bay, 333 Hegenberger Rd, Suite 710, Oakland, CA 94621, *Amount Awarded:* $62,965.00.
CCCS of Los Angeles, 500 Citadel Drive, Suite 300, Los Angeles, CA 90040, *Amount Awarded:* $18,004.00.
CCCS of Mid Counties, 2575 Grand Canal Blvd., Suite 100, Stockton, CA 95207, *Amount Awarded:* $19,043.00.
CCCS of Orange County, P.O. Box 11330, 1920 Old Tustin Avenue, Santa Ana, CA 92711–1330, *Amount Awarded:* $55,725.00.
CCCS of San Diego and Imperial Counties, 1550 Hotel Circle N. Suite 110, San Diego, CA 92108–2907, *Amount Awarded:* $20,593.00.
CCCS of South Nevada, 3650 S. Decatur, Suite 30, Las Vegas, NV 89103, *Amount Awarded:* $42,810.00.
Central Oregon Comm Action Agency Network, 2303 SW First Street, Redmond, OR 97756, *Amount Awarded:* $35,000.00.
Chicanos Por La Causa, Inc., 1112 East Buckeye Road, Phoenix, AZ 85034, *Amount Awarded:* $43,849.00.
City of Anaheim Housing Authority, 201 S. Anaheim Blvd., Ste. 203, Anaheim, CA 92805, *Amount Awarded:* $13,864.00.
City of Vacaville, Office of Housing and Redevelopment, 40 Eldridge Avenue, Suite 2, Vacaville, CA 95688, *Amount Awarded:* $39,198.00.
Community Action Agency, 124 New 6th Street, Lewiston, ID 83501, *Amount Awarded:* $19,554.00.
Community Housing & Credit Counseling Center (CHCCC), 1001 Willow St., Chico, CA 95928, *Amount Awarded:* $35,058.00.
Community Housing & Shelter Services, PO Box 881, Modesto, CA 95353, *Amount Awarded:* $33,507.00.
Community Housing Resource Center, 5212 NE St. John Road, Suite B, Vancouver, WA

98668–6248, *Amount Awarded:* $58,826.00.
County of Santa Cruz Housing Authority, 2160 41st Avenue, Capitola, CA 95010–2060, *Amount Awarded:* $16,965.00.
Eden Council for Hope and Opportunity, 770 A Street, Hayward, CA 94541, *Amount Awarded:* $25,500.00.
Fair Housing Council of Orange County, 201 So Broadway, Santa Ana, CA 92701, *Amount Awarded:* $44,872.00.
Family Housing Resources, Inc., 3777 East Broadway, Suite 100, Tucson, AZ 85716, *Amount Awarded:* $25,000.00.
Fremont Public Association, P.O. Box 31151, Seattle, WA 98103, *Amount Awarded:* $50,000.00.
Inland Fair Housing and Mediation Board, 1005 Begonia Avenue, Ontario, CA 91762, *Amount Awarded:* $61,415.00.
Legal Aid Society of Hawaii, 924 Bethel Street, Honolulu, HI 96813, *Amount Awarded:* $11,802.00.
Neighborhood House Association, 5660 Copley Drive, San Diego, CA 92111, *Amount Awarded:* $47,973.00.
Open Door Counseling Social Service, 34420 SW Tualatin Valley Highway, Hillsboro, OR 97123, *Amount Awarded:* $44,872.00.
Pacific Community Services, Inc., 329 Railroad Avenue, Pittsburg, CA 94566, *Amount Awarded:* $67,105.00.
Pierce County Department of Community Services, 8811 South Tacoma, Lakewood, WA 98499, *Amount Awarded:* $30,000.00.
Project Sentinel, 430 Sherman Avenue, Ste 308, Palo Alto, CA 94306, *Amount Awarded:* $41,771.00.
Sacramento Neighborhood Housing Services, Inc., 3453 5th Avenue, Sacramento, CA 95817, *Amount Awarded:* $43,849.00.
San Diego Home Loan Counseling Service, 3180 University Avenue, Ste 430, San Diego, CA 92104, *Amount Awarded:* $44,872.00.
Southeastern Arizona Government Organization, 118 Arizona Street, Bisbee, AZ 85603, *Amount Awarded:* $5,601.00.
Spokane Neighborhood Action Program, 2116 East First Avenue, Spokane, WA 99202, *Amount Awarded:* $64,004.00.
Springboard, Non-Profit Consumer Credit Mgmt., 6370 Magnolia Avenue, Suite 200, Riverside, CA 92506, *Amount Awarded:* $3,539.00.
Umpqua Community Action Network, 2448 West Harvard, Roseburg, OR 97470, *Amount Awarded:* $20,000.00.
Washoe County Department of Senior Services, 1155 East Ninth Street, Reno, NV 89512, *Amount Awarded:* $18,515.00.
Washoe Legal Services, 650 Tahoe Street, Reno, NV 89509, *Amount Awarded:* $34,546.00.
Women's Development Center, 953 E. Sahara Suite #201, Las Vegas, NV 89104, *Amount Awarded:* $34,019.00.

Appendix B

NonCompetitive Awards

Home Equity Conversion (HECM) Counseling

American Association of Retired Persons (AARP), 601 E Street, NW, Washington, DC 20049, *Amount Awarded:* $584,500.

Native American Grants

Navajo Partnership for Housing, Inc., P.O. Box 1370, St. Michaels, AZ 86511, *Amount Awarded:* $20,800.
Native American Housing Services, Inc., 132 E. Broadway, Suite 1, Anadarko, OK 73005, *Amount Awarded:* $20,800.
Nez Perce Tribal Housing Authority, P.O. Box 188, Lapwai, ID 83540, *Amount Awarded:* $20,800.
Sault Tribe Housing Authority, Homeownership Opportunities Program, 2218 Shunk Road, Sault Ste. Marie, MI 49783, *Amount Awarded:* $20,800.
Sicangu Enterprise Center, P.O. Box 205, Sicangu Lakota Nation, Mission, SD 57555, *Amount Awarded:* $20,800.
Neighborhood Reinvestment Corporation, 1325 G Street, NW, Suite 800, Washington, DC 20005, *Amount Awarded:* $25,000.

[FR Doc. 02–1029 Filed 1–15–02; 8:45 am]

BILLING CODE 4210–27–P

DEPARTMENT OF THE INTERIOR

U.S. Geological Survey

Request for Public Comments on Information Collection Submitted to OMB for Review Under the Paperwork Reduction Act

The proposal for the information collection described below has been submitted to the Office of Management and Budget for approval under the provisions of the Paperwork Reduction Act (44 U.S.C. chapter 35). Copies of the proposed collection of information may be obtained by contacting the Bureau's clearance officer at the phone number listed below. OMB has up to 60 days to approve or disapprove the information collection, but may respond after 30 days; therefore comments on the proposal should be made directly to the Desk Officer for the Interior Department, Office of Regulatory Affairs, Office of Management and Budget, Washington, DC 20503; and to the Bureau Clearance Officer, U.S. Geological Survey, 807 National Center, 12201 Sunrise Valley Drive, Reston, Virginia 20192, telephone (703) 648–7313.

As required by OMB regulations at 5 CFR 1320.8(d)(1), the U.S. Geological Survey solicits specific public comments as to:

1. Whether the collection of information is necessary for the proper performance of the functions on the bureaus, including whether the information will have practical utility;

2. The accuracy of the bureau's estimate of the burden of the collection of information, including the validity of the methodology and assumptions used;

3. The quality, utility, and clarity of the information to be collected; and

4. How to minimize the burden of the collection of information on those who are to respond, including the use of appropriate automated, electronic, mechanical, or other forms of information technology.

Title: Visitor knowledge and economic impact at Arapaho, Arrowwood and Sand Lake National Wildlife Refuges.

OMB Approval No.: New collection.

Abstract: The National Wildlife Refuge System Improvement Act of 1997 requires that all refuges will be managed in accordance with an approved Comprehensive Conservation Plan (CCP) which, when implemented, will achieve refuge purposes; help fulfill the Refuge System mission; maintain and, where appropriate, restore the ecological integrity of each refuge and the Refuge System; help achieve the goals of the Wilderness Preservation System; and meet other mandates. An underlying component of these plans is a strong scientific foundation for establishment for refuge objectives, implementation of management actions, and quantitative monitoring of progress towards these objectives. Few studies have been conducted that evaluate public knowledge, perception, or economic value associated with National Wildlife Refuges. Information about the existing community, economic, and public relations status is a precursor to many of the habitat and visitor management decisions. The primary objective of this study is to gain sufficient knowledge about refuge visitors. Our second objective is to develop and test a set of tools that can be used/repeated at other refuges around the country. Understanding public knowledge, perception, and values is a vital component of natural resource management. Improved understanding will guide future management practices.

Bureau Form No.: None.

Frequency: One time.

Description of Respondents: A sample of visitors to Arapaho, Arrowwood, and Sand Lake National Wildlife Refuges.

Estimated Completion Time: 15 minutes per respondent (approximate).

Number of Respondents: 600 (200 per refuge).

Burden Hours: 150 hours (The burden estimates are based on 15 minutes to complete each questionnaire and an 70% return rate.)

For Further Information Contact: Phadrea Ponds (970) 226–9445, *phadrea ponds@usgs.gov.*

Dated: September 24, 2001.

Dennis B. Fenn,

Associate Director for Biology.

[FR Doc. 02–1071 Filed 1–15–02; 8:45 am]

BILLING CODE 4310–Y7–M

DEPARTMENT OF THE INTERIOR

Bureau of Land Management

[OR–912–6320–AA; GP2–0062]

Meeting for the Five Western Oregon BLM Resource Advisory Committee

AGENCY: Bureau of Land Management, Interior.

ACTION: Meeting notice for the five western Oregon Bureau of Land Management (BLM) Resource Advisory Committees under Section 205 of the Secure Rural Schools and Community Self Determination Act of 2000 (Pub. L. 106–393).

SUMMARY: This notice is published in accordance with Section 10(a)(2) of the Federal Advisory Committee Act. Meeting notice is hereby given for the five western Oregon BLM Resource Advisory Committees including the Coos Bay, Eugene, Medford, Roseburg and Salem Districts pursuant to Section 205 of the Secure Rural Schools and Community Self Determination Act of 2000, Public Law 106–393 (the Act). Topics to be discussed by the BLM Resource Advisory Committees include operating procedures, establishing roles and responsibilities, selection of a chairperson, Federal travel regulations, facilitation needs, as well as future meeting dates. Follow-up meetings will address projects to proposed for funding under Title II of the Act.

DATES: The BLM Resource Advisory Committees will meet on the following dates: The Coos Bay Resource Advisory Committee will meet at the BLM Coos Bay District Office, 1300 Airport Lane, North Bend, Oregon 97459, 9 a.m. to 3 p.m., on February 22, 2002 and 9 a.m. to 3 p.m., on March 7, 2002.

The Eugene Resource Advisory Committee will meet at the BLM Eugene District Office, 2890 Chad Drive, Eugene, Oregon 97440, 9 a.m. to 3 p.m., on February 28, 2002 and 9 a.m. to 3 p.m., on March 14, 2002.

The Medford Resource Advisory Committee will meet at the BLM Medford District Office, 3040 Biddle Road, Medford, Oregon 97504, 10 a.m. to 4 p.m., on February 14, 2002 and 10 a.m. to 4 p.m. March 27, 2002.

The Salem Resource Advisory Committee will meet at the BLM Salem District Office, 1717 Fabry Road, Salem, Oregon 97306, 9 a.m. to 3 p.m., on February 1, 2002 and 9 a.m. to 3 p.m., on March 1, 2002

The Roseburg Resource Advisory Committee will meet at the BLM Roseburg District Office, 777 N.W. Garden Valley Boulevard, Roseburg, Oregon 97470, 9 a.m. to 4 p.m., on February 11, 2002 and 9 a.m. to 4 p.m., on February 25, 2002.

SUPPLEMENTARY INFORMATION: Pursuant to the Act, five Resource Advisory Committees have been formed for western Oregon BLM districts that contain Oregon & California (O&C) Grant Lands and Coos Bay Wagon Road lands. The Act establishes a six-year payment schedule to local counties in lieu of funds derived from the harvest of timber on federal lands, which have dropped dramatically over the past 10 years.

The Act creates a new mechanism for local community collaboration with federal land management activities in the selection of projects to be conducted on federal lands or that will benefit resources on federal lands using funds under Title II of the Act. The BLM Resource Advisory Committees consist of 15 local citizens (plus 6 alternates) representing a wide array of interests.

FOR FURTHER INFORMATION CONTACT: Additional information concerning the BLM Resource Advisory Committees may be obtained from Maya Fuller, Public Affairs, Oregon State Office, P.O. Box 2965, Portland, Oregon 97208, (503) 952–6437, or *maya_fuller@or.blm.gov,* or on the Web at *www.or.blm.gov.*

Dated: December 21, 2001.

Chuck Wassinger,

Associate State Director.

[FR Doc. 02–984 Filed 1–15–02; 8:45 am]

BILLING CODE 4310–33–P

DEPARTMENT OF THE INTERIOR

Minerals Management Service

Agency Information Collection Activities: Proposed Collection, Comment Request

AGENCY: Minerals Management Service (MMS), Interior.

ACTION: Notice of a revision of a currently approved information collection (OMB Control Number 1010–0107).

SUMMARY: To comply with the Paperwork Reduction Act (PRA) of 1995, we are inviting comments on a collection of information that we will submit to the Office of Management and Budget (OMB) for review and approval. The information collection request (ICR) is titled ''Designation of Royalty Payment Responsibility.''

DATES: Submit written comments on or before March 18, 2002.

ADDRESSES: Submit written comments to Carol P. Shelby, Regulatory Specialist, Minerals Management Service, Minerals Revenue Management, P.O. Box 25165, MS 320B2, Denver, Colorado 80225. If you use an overnight courier service, our courier address is Building 85, Room A–614, Denver Federal Center, Denver, Colorado 80225.

FOR FURTHER INFORMATION CONTACT: Carol P. Shelby, telephone (303) 231–3151, FAX (303) 231–3385, email *Carol.Shelby@mms.gov.*

SUPPLEMENTARY INFORMATION:

Title: Designation of Royalty Payment Responsibility.

OMB Control Number: 1010–0107.

Bureau Form Number: MMS–4425.

Abstract: The Department of the Interior (DOI) is responsible for matters relevant to mineral resource development on Federal and Indian lands and the Outer Continental Shelf (OCS). The Secretary of the Interior (Secretary) is responsible for managing the production of minerals from Federal and Indian lands and the OCS, collecting royalties from lessees who produce minerals, and distributing the funds collected in accordance with applicable laws. The Secretary also has an Indian trust responsibility to manage Indian lands and seek advice and information from Indian beneficiaries. MMS performs the royalty management functions and assists the Secretary in carrying out DOI's Indian trust responsibility.

The Federal Oil and Gas Royalty Simplification and Fairness Act of 1996 (RSFA), Public Law 104–185, as corrected by Public Law 104–200, established that owners of operating rights or lease record title (referred to as ''lessees'') are responsible for making royalty and related payments on Federal oil and gas leases. It is common, however, for a payor rather than a lessee to make these payments. When a payor makes payments on behalf of a lessee, RSFA requires that the lessee designate the payor as its designee and notify MMS of this arrangement in writing. These RSFA requirements are codifed in 30 CFR 218.52.

MMS designed Form MMS–4425, Designation Form, to contain all the information necessary for lessees to comply with these RSFA requirements. We are proposing a minor revision to Form MMS–4425 to remove the field for revenue source code. This revision is necessary to make Form MMS–4425 compatible with other recently revised

forms such as the Form MMS–2014, Report of Sales and Royalty Remittance. These revisions are the result of a major reengineering of MMS's financial and compliance processes and the procurement of a new computer system.

Submission of the information in this collection is necessary to comply with RSFA requirements to notify MMS in writing when a lessee wishes to designate a designee. Proprietary information that is submitted is protected, and there are no questions of a sensitive nature included in this information collection.

Frequency: On occasion.

Estimated Number and Description of Respondents: 1,600 oil and gas lessees.

Estimated Annual Reporting and Recordkeeping ''Hour'' Burden: 1,200 hours.

Estimated Annual Reporting and Recordkeeping ''Non-hour Cost'' Burden: We have identified no ''non-hour cost'' burdens.

Comments: The PRA (44 U.S.C. 3501, *et seq.*) provides that an agency may not conduct or sponsor, and a person is not required to respond to, a collection of information unless it displays a currently valid OMB control number. Before submitting an ICR to OMB, PRA section 3506(c)(2)(A) requires each agency ''* * * to provide notice * * * and otherwise consult with members of the public and affected agencies concerning each proposed collection of information * * *.'' Agencies must specifically solicit comments to: (a) Evaluate whether the proposed collection of information is necessary for the agency to perform its duties, including whether the information is useful; (b) evaluate the accuracy of the agency's estimate of the burden of the proposed collection of information; (c) enhance the quality, usefulness, and clarity of the information to be collected; and (d) minimize the burden on the respondents, including the use of automated collection techniques or other forms of information technology.

The PRA also requires agencies to estimate the total annual reporting ''non-hour cost'' burden to respondents or recordkeepers resulting from the collection of information. We have not identified non-hour cost burdens for this information collection. If you have costs to generate, maintain, and disclose this information, you should comment and provide your total capital and startup cost components or annual operation, maintenance, and purchase of service components. You should describe the methods you use to estimate major cost factors, including system and technology acquisition, expected useful life of capital equipment, discount rate(s), and the period over which you incur costs. Capital and startup costs include, among other items, computers and software you purchase to prepare for collecting information; monitoring, sampling, testing equipment; and record storage facilities. Generally, your estimates should not include equipment or services purchased: (i) Before October 1, 1995; (ii) to comply with requirements not associated with the information collection; (iii) for reasons other than to provide information or keep records for the Government; or (iv) as part of customary and usual business or private practices.

We will summarize written responses to this notice and address them in our ICR submission for OMB approval, including appropriate adjustments to the estimated burden. We will provide a copy of the ICR to you without charge upon request.

Public Comment Policy. We will also make copies of the comments available for public review, including names and addresses of respondents, during regular business hours at our offices in Lakewood, Colorado. Individual respondents may request that we withhold their home address from the public record, which we will honor to the extent allowable by law. There also may be circumstances in which we would withhold from the rulemaking record a respondent's identity, as allowable by law. If you request that we withhold your name and/or address, state this prominently at the beginning of your comment. However, we will not consider anonymous comments. We will make all submissions from organizations or businesses, and from individuals identifying themselves as representatives or officials of organizations or businesses, available for public inspection in their entirety.

MMS Information Collection Clearance Officer: Jo Ann Lauterbach, (202) 208–7744.

Dated: November 16, 2001.

Lucy Querques Denett,

Associate Director for Minerals Revenue Management.

[FR Doc. 02–1060 Filed 1–15–02; 8:45 am]

BILLING CODE 4310–MR–W

INTERNATIONAL TRADE COMMISSION

[Investigations Nos. 731–TA–986 and 987 (Preliminary)]

Ferrovanadium From China and South Africa

Determinations

On the basis of the record [1] developed in the subject investigations, the United States International Trade Commission determines, pursuant to section 733(a) of the Tariff Act of 1930 (19 U.S.C. 1673b(a)) (the Act), that there is a reasonable indication that an industry in the United States is materially injured by reason of imports from China and South Africa of ferrovanadium, provided for in subheading 7202.92.00 of the Harmonized Tariff Schedule of the United States, that are alleged to be sold in the United States at less than fair value (LTFV).

Commencement of Final Phase Investigations

Pursuant to § 207.18 of the Commission's rules, the Commission also gives notice of the commencement of the final phase of its investigations. The Commission will issue a final phase notice of scheduling, which will be published in the **Federal Register** as provided in § 207.21 of the Commission's rules, upon notice from the Department of Commerce of an affirmative preliminary determination in these investigations under section 733(b) of the Act, or, if the preliminary determinations are negative, upon notice of affirmative final determinations in those investigations under section 735(a) of the Act. Parties that filed entries of appearance in the preliminary phase of the investigations need not enter a separate appearance for the final phase of the investigations. Industrial users, and, if the merchandise under investigation is sold at the retail level, representative consumer organizations have the right to appear as parties in Commission antidumping and countervailing duty investigations. The Secretary will prepare a public service list containing the names and addresses of all persons, or their representatives, who are parties to the investigations.

Background

These investigations are being instituted in response to a petition filed on November 26, 2001, by the Ferroalloys Association Vanadium Committee and its members Bear

[1] The record is defined in § 207.2(f) of the Commission's rules of practice and procedure (19 CFR 207.2(f)).

Metallurgical Co., Butler, PA, Shieldalloy Metallurgical Corp., Cambridge, OH, Gulf Chemical & Metallurgical Corp., Freeport, TX, U.S. Vanadium Corp., Danbury, CT, and CS Metals of Louisiana LLC, Convent, LA.

Notice of the institution of the Commission's investigations and of a public conference to be held in connection therewith was given by posting copies of the notice in the Office of the Secretary, U.S. International Trade Commission, Washington, DC, and by publishing the notice in the **Federal Register** of November 30, 2001 (66 FR 59815). The conference was held in Washington, DC, on December 17, 2001, and all persons who requested the opportunity were permitted to appear in person or by counsel.

The Commission transmitted its determinations in these investigations to the Secretary of Commerce on January 10, 2002. The views of the Commission are contained in USITC Publication 3484 (January 2002), entitled Ferrovanadium from China and South Africa: Investigations Nos. 731–TA–989 and 987 (Preliminary).

Issued: January 10, 2002.

By order of the Commission.

Marilyn R. Abbott,

Acting Secretary.

[FR Doc. 02–1124 Filed 1–15–02; 8:45 am]

BILLING CODE 7020–02–P

INTERNATIONAL TRADE COMMISSION

[Investigation 332–435]

Tools, Dies, and Industrial Molds: Competitive Conditions in the United States and Selected Foreign Markets

AGENCY: United States International Trade Commission.

ACTION: Institution of investigation and scheduling of public hearing.

EFFECTIVE DATE: January 10, 2002.

SUMMARY: Following receipt of a request on December 21, 2001, from the Committee on Ways and Means of the U.S. House of Representatives, the Commission instituted investigation No. 332–435, Tools, Dies, and Industrial Molds: Competitive Conditions in the United States and Selected Foreign Markets, under section 332(g) of the Tariff Act of 1930 (19 U.S.C. 1332(g)).

FOR FURTHER INFORMATION CONTACT: Information specific to this investigation may be obtained from Dennis Fravel, Project Leader (202–205–3404; *fravel@usitc.gov*) or Harry Lenchitz, Deputy Project Leader (202–205–2737; *lenchitz@usitc.gov*), Office of Industries, U.S. International Trade Commission, Washington, DC, 20436. For information on the legal aspects of this investigation, contact William Gearhart of the Office of the General Counsel (202–205–3091; *wgearhart@usitc.gov*). Hearing impaired individuals are advised that information on this matter can be obtained by contacting the TDD terminal on (202) 205–1810.

Background

As requested by the Committee, the Commission will provide information, to the extent possible, for the most recent five-year period regarding the following:

1. A profile of the U.S. tool, die, and industrial mold industries.
2. Changes in marketing and manufacturing processes, and trends in U.S. production, consumption, and trade.
3. A global market overview and assessment of foreign markets and significant foreign industries, including those in China, Taiwan, Japan, Canada, Mexico, and European Union member countries.
4. A comparison of the strengths and weaknesses of U.S. and foreign producers regarding factors of competition such as production costs, labor costs, availability of skilled/experienced labor force, level of technology in the design and manufacturing process, availability of capital, transportation costs, pricing, product quality and after-sales service, and government programs assisting these industries.
5. The principal challenges and potential implications for the industries over the near term. As requested by the Committee, the Commission plans to submit its report to the Committee by October 21, 2002.

Public Hearing

A public hearing in connection with the investigation will be held at the U.S. International Trade Commission Building, 500 E Street SW., Washington, DC, beginning at 9:30 a.m. on May 21, 2002. All persons shall have the right to appear, by counsel or in person, to present information, and to be heard. Requests to appear at the public hearing should be filed with the Secretary, United States International Trade Commission, 500 E Street SW., Washington, DC 20436, no later than 5:15 p.m., May 7, 2002. Any prehearing briefs (original and 14 copies) should be filed not later than 5:15 p.m., May 9, 2002; the deadline for filing post-hearing briefs or statements is 5:15 p.m., May 30, 2002. In the event that, as of the close of business on May 7, 2002, no witnesses are scheduled to appear at the hearing, the hearing will be canceled. Any person interested in attending the hearing as an observer or non-participant may call the Secretary to the Commission (202–205–1806) after May 7, 2002, to determine whether the hearing will be held.

Written Submissions

In lieu of or in addition to participating in the hearing, interested parties are invited to submit written statements (original and 14 copies) concerning the matters to be addressed by the Commission in its report on this investigation. Commercial or financial information that a submitter desires the Commission to treat as confidential must be submitted on separate sheets of paper, each clearly marked ''Confidential Business Information'' at the top. All submissions requesting confidential treatment must conform with the requirements of § 201.6 of the Commission's rules of practice and procedure (19 CFR 201.6). All written submissions, except for confidential business information, will be made available in the Office of the Secretary to the Commission for inspection by interested parties. To be assured of consideration by the Commission, written statements relating to the Commission's report should be submitted to the Commission at the earliest practical date and should be received no later than the close of business on May 30, 2002. All submissions should be addressed to the Secretary, United States International Trade Commission, 500 E Street SW., Washington, DC 20436. The Commission's rules do not authorize filing submissions with the Secretary by facsimile or electronic means.

Persons with mobility impairments who will need special assistance in gaining access to the Commission should contact the Office of the Secretary at 202–205–2000. General information concerning the Commission may also be obtained by accessing its Internet server (*http://www.usitc.gov*).

List of Subjects

Tools, dies, industrial molds, competitiveness, and imports.

Issued: January 11, 2002.

By order of the Commission.

Marilyn R. Abbott,

Acting Secretary.

[FR Doc. 02–1123 Filed 1–15–02; 8:45 am]

BILLING CODE 7020–02–P

DEPARTMENT OF JUSTICE

Provision of Aviation Training to Certain Alien Trainees

AGENCY: Department of Justice.

ACTION: Notice of advance consent for providing aviation training to certain alien trainees.

SUMMARY: Under section 113 of the Aviation and Transportation Security Act (ATSA), training providers subject to regulation by the Federal Aviation Administration (FAA) are prohibited from providing training to aliens in the operation of aircraft with a maximum certificated takeoff weight of 12,500 pounds or more, unless they provide prior notification to the Attorney General. This notice temporarily grants advance consent for the training of certain categories of aliens, without requiring that they provide identifying information to the Attorney General, based on a provisional finding that they do not constitute a risk to aviation or national security at this time.

DATES: This notice is effective January 15, 2002 and remains in effect until further notice.

FOR FURTHER INFORMATION CONTACT: Steven C. McCraw, Director, Foreign Terrorist Tracking Task Force, U.S. Department of Justice, 950 Pennsylvania Avenue, NW, Washington, DC 20530, Telephone (703) 414–9535.

SUPPLEMENTARY INFORMATION: On November 19, 2001, Congress enacted the Aviation and Transportation Security Act (ATSA), Pub. L. 107–71. Upon enactment, section 113 of the ATSA imposed new constrictions on persons subject to regulation under Title 49 subtitle VII part A, United States Code, with respect to providing aviation training to aliens. Persons subject to regulation under Title 49 subtitle VII Part A, United States Code, include individual training providers, certificated carriers, and flight schools (hereinafter collectively referred to as ''training providers''). Pursuant to section 113, training providers must provide the Attorney General with the alien's identification in such form as the Attorney General may require in order to initiate a security risk assessment by the Department of Justice. After notification, the Attorney General then has 45 days to inform the training provider that the alien should not be given the requested training because he or she presents a risk to aviation or national security. If the Attorney General does not indicate that the person is a risk within this 45-day review period, then the training provider may proceed with training. The ATSA, however, permits the Attorney General to interrupt training if he later determines that the alien poses a risk to aviation or national security. The Attorney General has delegated his authority under Section 113 to the Director of the Foreign Terrorist Tracking Task Force.

The Department recognizes that section 113 of the ATSA became immediately effective, and that training providers have been forced to suspend the training of aliens covered by the ATSA pending the implementation of the process for notification to the Attorney General. The Department plans to issue any necessary implementing regulations as soon as possible. However, because the suspension of training imposes a substantial economic burden on regulated training providers, the Department is granting provisional advance consent, effective immediately, for training providers to resume aviation training for certain categories of aliens who appear to pose a risk to aviation and national security which is sufficiently minimal that the Department would not deny them training. In addition, section 113 also permits the Under Secretary of Transportation for Security to specify other individuals for whom the Department should conduct security risk assessments. At this time, however, no other individuals have been specified. The Department plans to publish implementation procedures shortly to provide a means by which training providers may notify the Attorney General with respect to covered individuals seeking aviation instruction who are not eligible for advance consent in order to initiate the Department of Justice's 45-day review period.

Provisional Advance Consent for the Training of Certain Aliens

The Department believes that the primary intent of Congress regarding the enactment of this statute was to prevent potentially dangerous aliens from being taught how to pilot aircraft with a maximum certificated takeoff weight of 12,500 pounds or more. Based on that standard, it appears that certain categories of aliens pose little such risk. For example, currently licensed pilots who seek recurrent training already know how to fly the aircraft for which they wish to maintain proficiency. Denying such retraining would appear to offer no benefit to aviation or national security. Indeed, the purpose behind recurrent training is to make flying safer for the public. The Department has identified several similar classes of aliens who appear not to pose the risk to aviation or national security contemplated by Congress in section 113 of the ATSA. The Department will revisit this provisional advance consent when it promulgates any necessary implementing regulations to determine whether these pilots should continue to be granted advance consent.

Accordingly, effective immediately and until further notice, the Department is granting a provisional advance consent for the training of the following three categories of aliens, based on an initial determination that they do not appear to pose a risk to aviation or national security:

(1) Foreign nationals who are currently employed by U.S. air carriers as pilots on aircraft with a maximum certificated takeoff weight of 12,500 pounds or more;

(2) Foreign nationals employed by foreign air carriers as pilots on aircraft with a maximum certificated takeoff weight of 12,500 pounds or more who are current and qualified as pilot in command, second in command, or flight engineer with respective certificates and ratings recognized by the United States; and

(3) Commercial, corporate, or military pilots of aircraft with a maximum certificated takeoff weight of 12,500 pounds or more who must receive familiarization training on a particular aircraft in order to transport it to the purchaser.

Determination of Status as a U.S. Citizen or National or as an Alien

Section 113 of the ATSA applies to all aliens as defined in section 101(a)(3) of the Immigration and Nationality Act, but does not currently apply to citizens or nationals of the United States. Accordingly, training providers must make a determination as to whether or not a prospective trainee is an alien. If the prospective trainee establishes that he or she is a citizen or national of the United States, the restrictions of section 113 do not apply.

Training providers should require appropriate proof of citizenship or nationality from all trainees who claim to be citizens or nationals of the United States, before commencing aviation training on aircraft with a maximum certificated takeoff weight of 12,500 pounds or more. This requirement is necessary to prevent aliens from falsely claiming to be United States citizens or nationals in order to evade the Department's security risk assessment.

The Department believes that the following documents are sufficient to establish proof of citizenship or nationality:

(1) A valid, unexpired United States passport;

(2) An original birth certificate with raised sea documenting birth in the United States or one of its territories;

(3) An original U.S. naturalization certificate with raised seal, Form N–550 or Form N–570;

(4) An original certification of birth abroad, Form FS–545 or Form DS–1350; or

(5) An original certificate of U.S. citizenship, Form N–560 or Form N–561.

If a training provider has questions about the documents above or any other documentation presented by a person who claims to be a citizen or national of the United States, the training provider may seek further guidance from the Department or the Immigration and Naturalization Service.

Commencement of Aviation Training for Aliens Granted Advance Consent

After a training provider reasonably determines that a prospective alien trainee falls within one of the three advance consent categories, the training provider may proceed with training the alien immediately and does not have to submit any identifying information to the Department. The training provider, however, should retain records to document how the training provider made the determination that the alien was eligible for advance consent. Appropriate measures will be taken by the Department with respect to any alien who is determined to pose a risk to aviation or national security. Available civil and/or criminal penalties will be pursued with respect to any training provider who knowingly or negligently provides training to aliens not covered by this notice.

Dated: January 14, 2002.

Steven C. McCraw,

Director, Foreign Terrorist Tracking Task Force.

[FR Doc. 02–1250 Filed 1–14–02; 2:51 pm]

BILLING CODE 4410–19–M

DEPARTMENT OF JUSTICE

Notice of Lodging of Consent Decree Pursuant to the Comprehensive Environmental Response, Compensation and Liability Act

In accordance with Department of Justice policy codified at 28 CFR 50.7 and Section 122 of the Comprehensive Environmental Response, Compensation and Liability Act of 1980, as amended (''CERCLA''), 42 U.S.C. 9622, notice is hereby given that on January 3, 2002, a proposed consent decree in *United States* v. *American Allied Additives, Inc., et al.*, No. 00–01014, was lodged with the United States District Court for the Northern District of Ohio. The proposed consent decree would resolve the United States' claims against defendant Advanced Chemical Design, Inc. under CERCLA Sections 106 and 107, 42 U.S.C. 9606 and 9607, in connection with the American Allied Additives Superfund Site (''Site'') in Cleveland, Ohio. The proposed consent decree would also resolve Advanced Chemical Design's counterclaim against the United States alleging a taking of private property in violation of the Fifth Amendment to the United States Constitution.

The U.S. Environmental Protection Agency (''EPA'') incurred unreimbursed costs of approximately $148,000 in responding to the release or threatened release of hazardous substances at the Site. Advanced Chemical Design is liable for response costs at the Site as a generator of waste disposed there and is subject to civil penalties as a result of noncompliance with a Unilateral Administrative Order issued by EPA for the performance of an emergency removal at the Site.

Under the proposed consent decree, Advanced Chemical Design agrees to pay a total of $1,000 ($300 for the claim under CERCLA Section 106, and $700 for the claim under CERCLA Section 107) within thirty (30) days of entry of the consent decree. Advanced Chemical Design also agrees to dismiss with prejudice its counterclaim against the United States. In exchange, Advanced Chemical Design will receive a covenant not to sue for Site response costs, and for civil penalties for the violations alleged in the complaint. Advanced Chemical Design will also receive contribution protection for Site response costs.

For a period of thirty (30) days from the date of this publication, the Department of Justice will receive comments related to the proposed consent decree. Comments should be addressed to the Assistant Attorney General, Environment and Natural Resources Division, U.S. Department of Justice, 950 Pennsylvania Avenue, NW., Washington, DC 20530, and should refer to *United States* v. *American Allied Additives, Inc., et al.*, Civil Action No. 00–01014; D.J. Ref. No. 90–11–2–1318.

The consent decree may be examined at the Office of the United States Attorney, 1800 Bank One Center, 600 Superior Avenue, Cleveland, Ohio 44114, and at the U.S. Environmental Protection Agency, Region V, 77 West Jackson Boulevard, Chicago, Illinois 60604. A copy of the consent decree may also be obtained by mail from the Consent Decree Library, P.O. Box 7611, U.S. Department of Justice, Washington, DC 20044. In requesting a copy, please enclose a check in the amount of $5.75 (23 pages at 25 cents per page reproduction cost), and please refer to *United States* v. *American Allied Additives, Inc., et al.*, Civil Action No. 00–01014; D.J. Ref. No. 90–11–2–1318.

William Brighton,

Assistant Chief, Environmental Enforcement Section, Environment and Natural Resources Division.

[FR Doc. 02–1150 Filed 1–15–02; 8:45 am]

BILLING CODE 4410–15–M

DEPARTMENT OF JUSTICE

Notice of Lodging of Consent Decree Under Comprehensive Environmental Response, Compensation and Liability Act

Notice is hereby given that a partial consent decree in *United States* v. *American Scrap Company,* Civil Action No. 1:99–CV–2047, was lodged with the United States District Court for the Middle District of Pennsylvania on October 1, 2001. This notice was previously published in the **Federal Register** on October 15, 2001 and the public was given 30 days to comment. No comments were received. However, because of severe disruption in mail service to the Department of Justice, the United States is unable to conclude with certainty that any comments mailed in response to that notice would have been delivered to the Department of Justice. As a result, the United States is providing this opportunity for any persons who previously submitted comments to resubmit their comments as directed below.

The Partial Consent Decree resolves the United States' claims against Chemung Supply Corporation (''Settling Defendant'') under section 107(a) of the Comprehensive Environmental Response, Compensation and Liability Act (''CERCLA''), 42 U.S.C. 9607(a), for response costs incurred at the Jack's Creek/Sitkin Smelting Superfund Site in Mifflin County, Pennsylvania. The Partial Consent Decree requires the Settling Defendant to pay $210,000.00 in past response costs.

The Department of Justice will receive, for a period of twenty (20) days from the date of this publication, comments relating to the proposed consent decree that were previously submitted during the original comment period. Any persons who previously submitted comments should resubmit those comments by facsimile (at 202–

616–6583) to the Assistant Attorney General for the Environment and Natural Resources Division, Department of Justice, Washington, DC 20530. The comments should refer to *United States* v. *American Scrap Company,* DOJ #90–11–2–911/1.

Alternatively, the comments may be mailed to the Office of the United States Attorney, ATTN: Anne Fiorenza, 228 Walnut Street, Harrisburg, PA 17108.

Copies of the proposed Partial Consent Decree may be examined at the Office of the United States Attorney, Middle District of Pennsylvania, 228 Walnut Street, Harrisburg, PA 17108, and at EPA Region III, 1650 Arch Street, Philadelphia, PA 19103–2029. A copy of the proposed Partial Consent Decree may be obtained by mail from the U.S. Department of Justice, Consent Decree Library, P.O. Box 7611, Washington, DC 20044–7611. When requesting a copy of the proposed Partial Consent Decree, please enclose a check to cover the twenty-five cents per page reproduction costs payable to the ''Consent Decree Library'' in the amount of $6.00, and reference *United States* v. *American Scrap Company,* DOJ # 90–11–2–911/1.

Robert D. Brook,

Assistant Chief, Environmental Enforcement Section, Environment and Natural Resources Division.

[FR Doc. 02–1152 Filed 1–15–02; 8:45 am]

BILLING CODE 4410–15–M

DEPARTMENT OF JUSTICE

Notice of Lodging of Consent Decree Under the Clean Air Act, Clean Water Act, RCRA, CERCLA and EPCRA

Under 28 CFR 50.7, notice is hereby given that on December 28, 2001, a Consent Decree in *United States of America* v. *ATOFINA Chemicals, Inc.*, Civil Action No. 01–7807, was lodged with the United States District Court for the Eastern District of Pennsylvania.

In the Complaint, the United States seeks injunctive relief and civil penalties against ATOFINA Chemicals, Inc. (hereinafter, ''ATOFINA''), pursuant to section 113(b) of the Clean Air Act (''CAA''), 42 U.S.C. 7413(b) (1983), *amended by*, 42 U.S.C. 7413(b) (Supp. 1991), section 309 of the Clean Water Act, 33 U.S.C. 1319, and the Resource Conservation and Recovery Act, (''RCRA''), 42 U.S.C. 6901 *et seq.* for alleged violations at ATOFINA's chemical product manufacturing facilities in Axis, Alabama, Calvert City and Carrollton, Kentucky, Beaumont and Houston, Texas, and Piffard, New York.

Under the settlement, ATOFINA will install pollution control technologies to reduce emissions of volatile organic compounds (''VOCs'') from process units at its Calvert City and Carrollton Kentucky facilities. In addition, ATOFINA will undertake various remedial measures to ensure compliance with the Clean Water Act. The settlement requires ATOFINA to pay a civil penalty of $1.9 million, and perform supplemental environmental projects totaling approximately $300,000.

The Department of Justice will receive comments relating to the Consent Decree for a period of thirty (30) days from the date of this publication. Comments should be addressed to the Assistant Attorney General, Environment and Natural Resources Division, P.O. Box 7611, U.S. Department of Justice, Washington, DC 20044–7611, and should refer to *United States, et al.,* v. *ATOFINA Chemicals, Inc.*, D.J. Ref. 90–7–1–06426.

The Consent Decree may be examined at the Office of the United States Attorney for the Eastern District of Pennsylvania, 615 Chestnut Street, Suite 1250, Philadelphia, PA 19106. A copy of the Consent Decree may also be obtained by mail from the Consent Decree Library, PO Box 7611, U.S. Department of Justice, Washington, DC 20044–7611. In requesting a copy, please enclose a check in the amount of $12.50 (25 cents per page reproduction cost) payable to the Consent Library.

Robert D. Brook,

Assistant Section Chief, Environmental Enforcement Section, Environment and Natural Resources Division.

[FR Doc. 02–1113 Filed 1–15–02; 8:45 am]

BILLING CODE 4410–15–M

DEPARTMENT OF JUSTICE

Notice of Lodging of Consent Decree Pursuant to the Comprehensive Environmental Response, Compensation, and Liability Act

Pursuant to Section 122(d)(2) of the Comprehensive Environental Response, Compensation, and Liability Act (''CERCLA''), 42 U.S.C. 9622(d)(2), and 28 CFR 50.7, notice is hereby given that a proposed consent decree embodying a settlement in *United States* v. *Chevron Environmental Management Co., et al.,* No. CV 01–11162 MMM (JWJx), was lodged on December 28, 2001, with the United States District Court for the Central District of California, Western Division.

In a complaint filed concurrently with the lodging of the consent decree, the United States, the State of California, and the California Hazardous Substance Account, seek injunctive relief for performance of response actions and reimbursement of response costs incurred by the United States Environmental Protection Agency (''EPA'') and by the California Department of Toxic Substances Control (''DTSC''), pursuant to sections 106 and 107 of CERCLA, 42 U.S.C. 96060, 9607, in response to releases of hazardous substances at the Operating Industries, Inc. (''OII'') Superfund site in Monterey Park, California. Under the proposed consent decree, the settling defendants have agreed to pay response costs and fund and perform future response actions at the OII Site.

Overall this consent decree has a combined value of approximately $340 million, contributed by the respective parties in cash, or work commitments and reimbursement of past response costs. The settlement addresses the full implementation of the final remedy at the Site. Under this settlement, Work Defendants will perform the Work required by the consent decree, valued at approximately $297 million ($262 million in work plus $25 million in future oversight costs), which will be funded through Work Defendant contributions, payments by Cash Defendants and escrow accounts established under prior settlements or to be established under this settlement. EPA will receive approximately $10 million to be placed in a Special Account, which is available to pay for Excluded Work. The settlement also includes an agreement by the United States Navy to pay approximately $1 million to resolve the Navy's potential liability at the OII site.

The Department of Justice will receive, for a period of thirty (30) days from the date of this publication, comments relating to the proposed consent decree. Comments should be addressed to the Assistant Attorney General for the Environment and Natural Resources Division, U.S. Department of Justice, Box 7611 Ben Franklin Station, Washington, D.C. 20044–7611, and should refer to *United States* v. *Chevron Environmental Management Co. et al.,* DOJ Ref.#90–11–2–156/4. Commenters may request a public hearing in the affected area, pursuant to Section 7003(d) of RCRA, 42 U.S.C. 6973(d).

The proposed consent decree may be examined at the EPA Region 9 Superfund Records Center, 75 Hawthorne Street, Fourth Floor, San Francisco, California 94015, and at the Office of the United States Attorney for the Central District of California,

Federal Building, Room 7516, 300 North Los Angeles Street, Los Angeles, California 90012. A copy of the proposed consent decree may be also be obtained by mail from the Department of Justice Consent Decree Library, Box 7611, Ben Franklin Station, Washington, DC 20044–7611. In requesting a copy, please refer to the referenced case and enclose a check in the amount of $250.50 (25 cents per page reproduction costs), payable to the Consent Decree Library. A copy of the decree, exclusive of the defendants' signature pages and the attachments, may be obtained for $54.50.

Catherine McCabe,

Deputy Section Chief, Environmental Enforcement Section, Environment and Natural Resources Division.

[FR Doc. 02–1114 Filed 1–15–02; 8:45 am]

BILLING CODE 4410–15–M

DEPARTMENT OF JUSTICE

Notice of Lodging of Consent Decree Pursuant to the Clean Water Act

In accordance with 28 CFR 50.7, the Department of Justice gives notice that a proposed consent decree in *United States* v. *Town of Greenwich*, No. 01–CV–2424 (D. Conn.), was lodged with the United States District Court for the District of Connecticut on December 27, 2001, pertaining to the payment of a civil penalty and injunctive relief, in connection with the Town of Greenwich's (Town) violations of the Clean Water Act (CWA), 33 U.S.C. 1251 *et seq.*, and National Pollution Discharge Elimination System (NPDES) permit, issued to the Town under the CWA.

Under the proposed consent decree, the Town will pay a civil penalty of $285,000, to be shared equally between the United States and the State of Connecticut, a co-plaintiff in the case, and will perform injunctive relief to evaluate and rehabilitate its wastewater collection, storage, and transmission system. The Consent Decree includes a release of claims alleged in the complaint.

The Department of Justice will receive, for a period of thirty (30) days from the date of this publication, comments relating to the proposed consent decree. Comments should be addressed to the Assistant Attorney General, Environment and Natural Resource Division, United States Department of Justice, Washington, DC 20530, and should refer to *United States* v. *Town of Greenwich*, No. 01–CV–2424 (D. Conn.), and DOJ Reference No. 90–5–1–1–06717.

The proposed consent decree may be examined at: (1) the Office of the United States Attorney for the District of Connecticut, 157 Church St., 23rd floor, New Haven, Connecticut 06510, (203) 821–3700; and (2) the United States Environmental Protection Agency (Region 1), One Congress Street, Boston, MA 02114 (contact Karen McGuire in the Office of Regional Counsel). A copy of the proposed consent decree may be obtained by mail from the Consent Decree Library, PO Box 7611, Washington, DC 20044. In requesting a copy, please refer to the referenced case and DOJ Reference Number and enclose a check in the amount of $20.75 (with attachments) or $8.50 (without attachments) (83 pages with attachments or 34 pages without attachments at 25 cents per page reproduction costs), made payable to the Consent Decree Library.

Ronald G. Gluck,

Assistant Chief, Environmental Enforcement Section, Environment and Natural Resources Division.

[FR Doc. 02–1115 Filed 1–15–02; 8:45 am]

BILLING CODE 4410–15–M

DEPARTMENT OF JUSTICE

Notice of Lodging of a Consent Decree Under the Comprehensive Environmental Response, Compensation and Liability Act of 1980, as Amended

Under 42 U.S.C. 9622, notice is hereby given that on December 17, 2001, a proposed Consent Decree in *United States* v. *City of Jacksonville, et al.,* Civil Action No. 3:01cv1424J 21TEM was lodged with the United States District Court for the Middle District of Florida, Jacksonville Division.

In this action, the United States seeks reimbursement of response costs, performance of injunctive relief, and payment of natural resource damages pertaining to the Whitehouse Oil Pits Site in Whitehouse, Florida. The United States alleges that the defendants are liable under section 107(a) of the Comprehensive Environmental Response, Compensation and Liability Act of 1980 (CERCLA), as amended, because they operated the site at the time of a disposal of hazardous substances, or they sent hazardous substances to the site for disposal. The defendants in this action are: City of Jacksonville, Florida, Anchor Glass Container Corp., BP America, Inc., Chevron Environmental Management Co., Chevron USA, Inc., City of Starke, Florida, CSX Transportation, Inc., David J. Joseph Company, Exxon Mobil Corporation, Florida East Coast Railway, Norfolk Southern Railway, Ryder Truck Rental, Inc., USA Petroleum Corporation, Viacom, Inc., Western Auto Supply Company.

In settlement of the claims raised in the Complaint, a group of defendants will perform remedial work at the site. This work generally requires the installation of a vertical barrier to isolate contaminated soil, sludge, and groundwater; installation of a lime ''curtain'' inside the barrier to adjust groundwater pH; a cap over portions of the site; and realignment of McGirts Creek so that it runs farther away from the site. The work is expected to cost approximately $14,067,054, including operation, maintenance, and oversight by the United States Environmental Protection Agency. Other defendants will contribute to the cost of the remedy, as will the United States government and parties who are settling their liability under a separate administrative settlement. The defendants are also paying $77,000 to settle the claim for natural resource damages.

The Department of Justice will receive comments relating to the proposed Consent Decree for a period of thirty (30) days from the date of this publication. As a result of the discovery of anthrax contamination at the District of Columbia mail processing center in mid-October, 2001, the delivery of regular first-class mail sent through the U.S. Postal Service has been disrupted. Consequently, public comments which are addressed to the Department of Justice in Washington, DC and sent by regular, first-class mail through the U.S. Postal Service are not expected to be received in timely manner. Therefore, comments should be addressed to the Assistant Attorney General, Environment and Natural Resources Division, Department of Justice, and sent: (1) c/o Michael Stephenson, U.S. EPA Region 4, Atlanta Federal Center, 61 Forsyth Street, SW., Atlanta, Georgia 30303; and/or (2) by facsimile to (202) 353–0296; and/or (3) by overnight delivery, other than through the U.S. Postal Service, to Chief, Environmental Enforcement Section, 1425 New York Avenue, NW., 13th Floor, Washington, DC 20005. Each communication should refer on its face to *United States* v. *City of Jacksonville, et al.,* DOJ No. 90–11–3–1588. Commenters may request an opportunity for a public meeting in the affected area, in accordance with Section 7003(d) of RCRA, 42 U.S.C. 6973(d).

The proposed Consent Decree may be examined at the office of the United States Attorney for the Middle District

of Florida, 200 West Forsyth Street, Suite 700, Jacksonville, Florida, and at the Region 4 office of the Environmental Protection Agency, 61 Forsyth Street, SW., Atlanta, Georgia. A copy of the proposed Consent Decree may also be obtained by faxing a request to Tonia Fleetwood, Department of Justice Consent Decree Library, fax no. (202) 616–6584; phone confirmation no. (202) 514–1547. There is a charge for the copy (25 cent per page reproduction cost). Upon requesting a copy, please mail a check payable to the ''U.S. Treasury'', in the amount of $55.00 to: Consent Decree Library, U.S. Department of Justice, PO Box 7611, Washington, DC 20044–7611. The check should refer to *United States* v. *City of Jacksonville, et al.,* DOJ No. 90–11–3–1588. In requesting a copy exclusive of exhibits and defendants' signatures, please enclose a check in the amount of $13.75 (25 cents per page reproduction cost) payable to the Consent Decree Library.

Ellen Mahan,

Assistant Chief, Environmental Enforcement Section, Environment and Natural Resources Division.

[FR Doc. 02–1116 Filed 1–15–02; 8:45 am]

BILLING CODE 4410–15–M

DEPARTMENT OF JUSTICE

Republication of Notice of Lodging of Proposed Consent Decree Under the Clean Air Act

Under 28 CFR 50.7 notice is hereby given that on September 27, 2001, a proposed Consent Decree (''Consent Decree'') in *United States of America* v. *Knauf Fiber Glass GmbH*, Civil Cause No.: IP–01–1445–CV–B/S was lodged with the United States District Court for the Southern District of Indiana, Indianapolis Division.

Notice of the lodging of this Amended Consent Decree was first published by the Department of Justice in the **Federal Register** of October 15, 2001 (66 FR 52449–52450). The Department of Justice is republishing the Notice of Lodging because mail delivery problems associated with anthrax mailings to government offices have precluded the Department of Justice's receipt of public comments. To avoid additional delays related to such problems, the Department of Justice is requesting that any comments that were submitted under the original Notice of Lodging be resubmitted, this time to the U.S. Environmental Protection Agency, which will forward the comments to the Department of Justice. In this action the United States sought enforcement of the Clean Air Act and the State Implementation Plan (''Indiana SIP''), duly promulgated by the State of Indiana, for emission violations at the Knauf fiber glass manufacturing facilities located in Shelbyville, Indiana. The proposed Consent Decree resolves claims of the United States concerning Knauf's past violations of the emission standards, as established in the Indiana SIP, and the Clean Air Act, 42 U.S.C. 7413(b), including, *inter alia*, emissions of particulate matter from the Line 205 furnace stack at the Shelbyville facility. Pursuant to the proposed Consent Decree, Knauf Fiber Glass GmbH will, among other requirements, develop and implement a Supplemental Environmental Project (''SEP'') providing for the installation and operation of equipment (approximately one year earlier than would otherwise be required by EPA regulations) that will decrease particulate matter, carbon monoxide, and NO_X emissions. Also, under the proposed Consent Decree, Knauf Fiber Glass GmbH will pay $70,000 in civil penalties for violations of the Indiana SIP and the Clean Air Act.

The Department of Justice will receive for a period of thirty (30) days from the date of this publication comments relating to the proposed Consent Decree. Comments should be addressed to the U.S. Environmental Protection Agency, Region 5, 14th Floor, 77 West Jackson Boulevard, Chicago, Illinois 60604–3590 (Attn: Assistant Regional Counsel Padmavati Klejwa), and should refer to *United States* v. *Knauf Fiber Glass GmbH*, Civil Cause No. IP–01–1445–CV–B/S, D.J. Ref. 90–5–2–1–06368.

The proposed Consent Decree may be examined at the Office of the United States Attorney, 10 West Market Street, Suite 2100, Indianapolis, Indiana 46204–3048 (contact Assistant United States Attorney Thomas Kieper at (317) 229–2400), and at U.S. EPA Region 5, 14th Floor, 77 West Jackson Boulevard, Chicago, Illinois 60604–3590 (contact Assistant Regional Counsel Padmavati Klejwa at (312) 353–8917).

A copy of the proposed Consent Decree may also be obtained by mail from the Consent Decree Library, P.O. Box 7611, U.S. Department of Justice, Washington, DC 20044–7611. In requesting a copy, please enclose a check in the amount of $5.75 ($.25 cents per page reproduction cost) payable to the Consent Decree Library.

William D. Brighton,

Assistant Chief, Environmental Enforcement Section, Environment and Natural Resources Division.

[FR Doc. 02–1153 Filed 1–15–02; 8:45 am]

BILLING CODE 4410–15–M

DEPARTMENT OF JUSTICE

Republication of Notice of Lodging of First Amended Consent Decree Under the Clean Water Act

Under 28 CFR 50.7 notice is hereby given that on September 27, 2001, a proposed First Amended Consent Decree (''Amended Consent Decree'') in *United States of America and State of Indiana* v. *City of New Albany,* Civil No. NA–90–46–C–B/G was lodged with the United States District Court for the Southern District of Indiana, New Albany Division.

Notice of the lodging of the Amended Consent Decree was first published by the Department of Justice in the **Federal Register** of October 15, 2001 (66 FR 52451). The Department of Justice is republishing the Notice of Lodging because mail delivery problems associated with anthrax mailings to government offices have precluded the Department of Justice's receipt of public comments. To avoid additional delays related to such problems, the Department of Justice is requesting that any comments that were submitted under the original Notice of Lodging be resubmitted, this time to the U.S. Environmental Protection Agency, which will forward the comments to the Department of Justice.

In this action, the United States sought enforcement of a Consent Decree entered into in 1993 for Clean Water Act violations at New Albany's wastewater treatment plant. The First Amended Consent Decree resolves claims of the United States concerning New Albany's wastewater treatment facility and sewer collection system for violations of the 1993 Consent Decree and the Clean Water Act, 33 U.S.C. 1251, *et seq.,* including, *inter alia*, bypasses and sanitary sewer overflow events. Pursuant to the Amended Consent Decree, New Albany will, among other requirements, develop and implement a capacity assurance plan to address the bypasses and sanitary sewer overflows at its wastewater treatment plant and in the sewer collection system. Also, under the Amended Consent Decree, New Albany will pay $180,000 in civil penalties for violations of the 1993 Consent Decree.

The United States will receive for a period of thirty (30) days from the date of this publication comments relating to the Amended Consent Decree. Comments should be addressed to the U.S. Environmental Protection Agency, 14th Floor, 77 West Jackson Boulevard, Chicago, Illinois 60604–3590 (Att.: Asst. Regional Counsel Deborah A. Carlson) and should refer to *United States and*

State of Indiana v. *City of New Albany,* Civil Cause No. NA–90–46–C–B/G, D.J. Ref. 90–5–1–1–3448/A.

The Amended Consent Decree may be examined at the Office of the United States Attorney, 10 West Market Street, Suite 2100, Indianapolis, Indiana 46204–3048 (contact Assistant United States Attorney Thomas Kieper at (317) 226–6333), and at U.S. EPA Region 5, 14th Floor, 77 West Jackson Boulevard, Chicago, Illinois 60604–3590 (contact Asst. Regional Counsel Deborah A. Carlson at (312) 353–6121). A copy of the Amended Consent Decree may also be obtained by mail from the Consent Decree Library, P.O. Box 7611, U.S. Department of Justice, Washington, DC 20044–7611. In requesting a copy, please enclose a check in the amount of $15.00 ($.25 cents per page reproduction cost) payable to the Consent Decree Library.

William D. Brighton,

Assistant Chief, Environmental Enforcement Section, Environment and Natural Resources Division.

[FR Doc. 02–1154 Filed 1–15–02; 8:45 am]

BILLING CODE 4410–15–M

DEPARTMENT OF JUSTICE

Notice of Lodging of Consent Decree Under the Comprehensive Environmental Response, Compensation, and Liability Act

In accordance with 42 U.S.C. 9622, notice is hereby given that on January 3, 2002 a proposed consent decree in *United States* v. *Pemaco, Inc. and Lawrence Sze,* Civil No. 00–6199DDDP(CTx), was lodged with the United States District Court for the Central District of California.

This consent decree represents a settlement of claims brought against Lawrence Sze, under section 107 of the Comprehensive Environmental Response, Compensation, and Liability Act, (''CERCLA'') (''the Act''), 42 U.S.C. 9607(a), for recovery of past and future response costs incurred by the United States in connection with the release or threat of release of hazardous substances at the Pemaco Superfund Site located in the City of Maywood, Los Angeles County, California (''the Site''). The Site is located at 5050 Slauson Avenue, in the City of Maywood, Los Angeles County, California, and consists of approximately 4 acres of land adjacent to the Los Angeles River. Lawrence Sze operated the facility from 1986 through 1991. Pemaco, Inc's operation included the purchase of chlorinated solvents, aromatic solvents, flammable liquids, and industrial oils. These chemicals were brought to the facility by rail and tanker truck, where they were repackaged for resale to industrial companies.

The Department of Justice has determined that Mr. Sze has a limited ability to pay and therefore entered into this proposed settlement, whereby Lawrence Sze will pay $50,000 in settlement of the government's claims.

The Department of Justice will receive for a period of thirty (30) days from the date of this publication comments relating to the Consent Decree. Comments should be addressed to the Assistant Attorney General, Environment and Natural Resources Division, care of Angels O'Connell, U.S. Department of Justice, Environment and Natural Resources Division, Environmental Enforcement Section, 301 Howard Street, Suite 1050, San Francisco, CA 94105 and should refer to *United States* v. *Pemaco, Inc. and Lawrence Sze,* DOJ Ref. 90–11–3–06958.

The Consent Decree may be examined at the Office of the United States Attorney for the Central District of California, 312 North Spring Street, G–8 U.S. Courthouse, Los Angeles, California 90012, and at the Region 9 office of the U.S. EPA, 75 Hawthorne Street, San Francisco, California. A copy of the Consent Decree may also be obtained by faxing a request to Tonia Fleetwood, Department of Justice Consent Decree Library, fax number (202) 616–6584; phone confirmation number (202) 514–1547. There is a charge for the copy (25 cent per page reproduction cost). Upon requesting a copy, please mail a check payable to the ''U.S. Treasury'', in the amount of $4.25, to: Consent Decree Library, U.S. Department of Justice, PO Box 7611, Washington, DC 20044–7611. The check should refer to *United States* v. *Pemaco, Inc., and Lawrence Sze,* Civil No. 00–6199–DDDP(CTx), DOJ Ref. 90–11–3–06958.

Ellen M. Mahan,

Assistant Section Chief, Environmental Enforcement Section, Environment and Natural Resources Division.

[FR Doc. 02–1117 Filed 1–15–02; 8:45 am]

BILLING CODE 4410–15–M

DEPARTMENT OF JUSTICE

Notice of Lodging of Consent Decree Under the Comprehensive Environmental Response, Compensation, and Liability Act

Notice is hereby given that on December 12, 2001 a proposed Consent Decree (''Decree'') in *United States et al.* v. *The S.W. Chemical Company, Inc.* Civil Action No. 01–2404, was lodged with the United States District Court for the District of Colorado. The action was filed pursuant to section 107(a)(1) and (4) of the Comprehensive Environmental Response, Compensation, and Liability Act (''CERCLA''), 42 U.S.C. 9607(a)(1) and (4). The action concerns EPA's costs of responding to the release or threatened release of hazardous substances at or from the Denver Radium Superfund Site, Operable Unit VIII, in the City and County of Denver, Colorado, also known as the Shattuck Superfund Site (the ''Site''), and possible damages for injury to or destruction of, or loss of natural resources resulting from the release of hazardous substances from the Site.

Under the terms of the Decree The S.W. Shattuck Chemical Company, Inc. (the ''Defendant''), will: (a) Pay the United States $5.45 million to be deposited into an EPA special account to offset EPA's response costs at the Site; (b) pay $250,000 to the United States Department of the Interior to settle a potential natural resource damages claim; and (c) establish a trust and convey the 5.9 acre parcel which is the subject of the environmental clean-up to the trust for sale and distribution of net sale proceeds to EPA's special account for the Site. The decree also includes proposed settlement terms between the State of Colorado and the Defendant.

The Department of Justice will receive comments relating to the proposed Consent Decree for a period of forty-five (45) days from the date of this publication. As a result of the discovery of anthrax contamination at the District of Columbia mail processing center in mid-October, 2001, the delivery of regular first-class mail sent through the U.S. Postal Service has been disrupted. Consequently, public comments which are addressed to the Department of Justice in Washington, DC and sent by regular, first-class mail through the U.S. Postal Service are not expected to be received in a timely manner. Therefore, comments should be addressed to the Assistant Attorney General, Environment and Natural Resources Division, Department of Justice, and sent to (1) Denver Field Office, 999 18th Street, Suite 945NT, Denver, CO 80202; and/or (2) by facsimile to (202) 353–0296; and/or (3) by overnight delivery, other than through the U.S. Postal Service, to Chief, Environmental Enforcement Section, 1425 New York Avenue NW., 13th Floor, Washington, DC 20005. Each communication should refer to *United States et al.* v. *The S.W. Shattuck Chemical Company, Inc.,* D.J. Ref. 90–11–2–741/1.

The proposed Consent Decree may be examined at the offices of the EPA Superfund Records Center, EPA Region VIII, located at 999 18th Street (check in at Suite 300), Denver, Colorado 80202. A copy of the proposed Consent Decree may also be obtained by faxing a request to Tonia Fleetwood, Department of Justice Consent Decree Library, fax no. (202) 616–6584; telephone confirmation no (202) 514–1547. There is a charge for the copy (25 cents per page reproduction cost). Upon requesting a copy, please mail a check payable to the ''U.S. Treasury'', in the amount of $17.75, to: Consent Decree Library, U.S. Department of Justice, PO Box 7611, Washington, DC 20044–7611. The check should refer to *United States et al.* v. *The S.W. Shattuck Chemical Company, Inc.,* D.J. Ref. 90–11–2–741/1.

Robert Brook,

Assistant Section Chief, Environmental Enforcement Section, Environment and Natural Resources Division.

[FR Doc. 02–1118 Filed 1–15–02; 8:45 am]

BILLING CODE 4410–15–M

DEPARTMENT OF JUSTICE

Notice of Lodging of Settlement Agreement Pursuant to the Comprehensive Environmental Response, Compensation and Liability Act and Chapter 11 of Title 11 of the United States Bankruptcy Code

In accordance with the policy of the Department of Justice, notice is hereby given that on December 10, 2001, a proposed settlement agreement in United States v. American Allied Additives, Inc., et al., Civil Action No. 00–01014, was lodged with the United States District Court for the Northern District of Ohio. The proposed settlement agreement would resolve the United States' claim against defendant Gibson-Homans Company pursuant to section 107 of the Comprehensive Environmental Response, Compensation and Liability Act of 1980, as amended (''CERCLA''), 42 U.S.C. 9607, in connection with the American Allied Additives Superfund Site in Cleveland, Ohio. Under the proposed settlement agreement, the United States' claim would be allowed as a pre-petition general unsecured claim for $24,050 in Gibson-Homans' bankruptcy proceeding, In Re: The Gibson-Homans Company, No. 00–50369 (Bankr. N.D. Ohio), pursuant to Chapter 11 of Title 11 of the United States Code, 11 U.S.C. 101, et seq.

For a period of thirty (30) days from the date of this publication, the Department of Justice will receive comments related to the proposed settlement agreement. Comments should be addressed to the Assistant Attorney General, Environment and Natural Resources Division, U.S. Department of Justice, 950 Pennsylvania Avenue, NW., Washington, DC 20530, and should refer to United States v. American Allied Additives, Inc., et al., Civil Action No. 1:00CV1014; D.J. Ref. No. 90–11–2–1318.

The settlement agreement may be examined at the Office of the United States Attorney, 1800 Bank One Center, 600 Superior Avenue, Cleveland, Ohio 44114, and at the U.S. Environmental Protection Agency, Region V, 77 West Jackson Boulevard, Chicago, Illinois 60604. A copy of the settlement agreement may also be obtained by mail from the Consent Decree Library, P.O. Box 7611, U.S. Department of Justice, Washington, DC 20044. In requesting a copy, please enclose a check in the amount of $2.00 (8 pages at 25 cents per page reproduction cost), and please refer to United States v. American Allied Additives, Inc., et al., Civil Action No. 00–01014; D.J. Ref. No. 90–11–2–1318.

William Brighton,

Assistant Chief, Environmental Enforcement Section, Environment and Natural Resources Division.

[FR Doc. 02–1151 Filed 1–15–02; 8:45 am]

BILLING CODE 4410–15–M

DEPARTMENT OF LABOR

Employment and Training Administration

Proposed Collection; Comment Request

ACTION: Notice.

SUMMARY: The Department of Labor, as part of its continuing effort to reduce paperwork and respondent burden conducts a preclearance consultation program to provide the general public and Federal agencies with an opportunity to comment on proposed and/or continuing collections of information in accordance with the Paperwork Reduction Act of 1995 (PRA95) (44 U.S.C. 3506(c)(2)(A)). This program helps to ensure that requested data can be provided in the desired format, reporting burden (time and financial resources) is minimized, collection instruments are clearly understood, and the impact of collection requirements on respondents can be properly assessed. Currently, the Employment and Training Administration is soliciting comments concerning the proposed new collection of data on the costs and usage of Workforce Investment Act (WIA) and Wagner Peyser services that do not require registration.

A copy of the proposed information collection request (ICR) can be obtained by contacting the office listed below in the **ADDRESSES** section of this notice.

DATES: Written comments must be submitted to the office listed in the addressee's section below on or before March 18, 2002.

ADDRESSES: James Aaron, Chief, Division of Performance and Results, Office of Financial and Administrative Management, Employment and Training Administration, U.S. Department of Labor, 200 Constitution Avenue, NW, Room N–4702, Washington, DC 20210, Telephone: (202) 693–2814 this is not a toll-free number), E-mail: jaaron@doleta.gov.

SUPPLEMENTARY INFORMATION:

1. Background

The Department of Labor seeks to collect data regarding the costs and usage of Workforce Investment Act (WIA) and Wagner Peyser services that do not require participant registration. Current reporting systems do not capture this information because self and informational services do not require registration and are not part of the performance accountability provisions of the respective statutes. This fact has complicated the budget process by limiting DOL's capacity to develop unit cost projections. In addition, DOL does not have complete information on WIA service design. The information that is developed will be used to inform budget decisions and the WIA reauthorization process.

The data will consist of information already collected by state and local workforce development staff for their own management purposes and data collected from a probability sample of persons using self-service facilities. The principal goal of the data collection is to develop a national estimate of the number of job seekers who use informational, self, or staff facilitated services that do not require registration in primary One-Stop programs and related costs.

II. Review Focus

The Department of Labor is particularly interested in comments which:

- Evaluate whether the proposed collection of information is necessary for the proper performance of the functions of the agency, including whether the information will have practical utility;

• Evaluate the accuracy of the agency's estimate of the burden of the proposed collection of information, including the validity of the methodology and assumptions used;

• Enhance the quality, utility, and clarify of the information to be collected; and

• Minimize the burden of the collection of information on those who are to respond, including through the use of appropriate automated, electronic, mechanical, or other technological collection techniques or other forms of information technology, *e.g.*, permitting electronic submissions of responses.

III. Current Actions

DOL is seeking Office of Management and Budget (OMB) approval to collect data on the costs and usage of Workforce Investment Act (WIA) and Wagner Peyser services that do not require registration. The data are necessary to inform budget decisions and for the WIA reauthorization process. The data will consist of information already collected by state and local workforce development staff for their own management purposes and data collected from a probability sample of persons using self-service facilities. The principal goal of the data collection is to develop a national estimate of the number of job seekers who use informational, self, or staff facilitated services that do not require registration in primary One-Stop programs.

Type of Review: New.

Agency: Employment and Training Administration.

Title: Estimation of ETA Non-Registrant Service Usage and Costs.

OMB Number: 1205–ONEW.

Affected Public: Individuals or households; State, Local or Tribal Government.

Total Respondents: 12,554.

Frequency: On occasion.

Total Responses: 12,554.

Average Time per Response: 12.37 hours for state survey; 2 minutes for participant survey.

Estimated Total Burden Hours: 1,085 for state and participant surveys; 2,760 local staff burden for participant survey.

TABLE 1.—RESPONDENT BURDEN FOR STATE AND PARTICIPANT SURVEYS

Data form	Total respondents	Frequency	Total responses	Average time per response	Total burden hours
State survey	54	1	54	12.37	668
Participant survey	12,500	1	12,500	2 minutes	417
Totals	12,554	1	12,554	NA	1,085

TABLE 2.—LOCAL STAFF BURDEN FOR PARTICIPANT SURVEY

Tasks conducted by local staff	Staff hours per sampled office	Staff hours for 120 sampled offices
Orientation and Training	2	240
Data Collection	20	2,400
Maintenance and Delivery of Data Collection Forms	1	120
Total Burden Hours	23	2,760

Total Burden Hours for all surveys: 3,845.

Total Burden Cost (capital/startup): $0.

Total Burden Cost (operating/maintaining): $0.

Comments submitted in response to this comment request will be summarized and/or included in the request for Office of Management and Budget approval of the information collection request; they will also become a matter of public record.

Bryan T. Keilty,

Administrator, Office of Financial and Administrative Management, Employment and Training Administration.

[FR Doc. 02–1111 Filed 1–15–02; 8:45 am]

BILLING CODE 4510–30–M

DEPARTMENT OF LABOR

Employment Standards Administration

Proposed Collection; Comment Request

ACTION: Notice.

SUMMARY: The Department of Labor, as part of its continuing effort to reduce paperwork and respondent burden, conducts a preclearance consultation program to provide the general public and Federal agencies with an opportunity to comment on proposed and/or continuing collections of information in accordance with the Paperwork Reduction Act of 1995 (PRA95) (44 U.S.C. 3506(c)(2)(A)). This program helps to ensure that requested data can be provided in the desired format, reporting burden (time and financial resources) is minimized, collection instruments are clearly understood, and the impact of collection requirements on respondents can be properly assessed. Currently, the Employment Standards Administration is soliciting comments concerning the following information collection: Housing Occupancy Certificate—Migrant and Seasonal Agricultural Worker Protection Act.

DATES: Written comments must be submitted to the office listed in the addressee section below within March 18, 2002.

ADDRESSES: Ms. Patricia A. Forkel, U.S. Department of Labor, 200 Constitution Ave., NW, Room S–3201, Washington, DC 20210, telephone (202) 693–0339 (this is not a toll-free number), fax (202) 693–1451, EMail pforkel@fenix2.dol-esa.gov.

SUPPLEMENTARY INFORMATION:

Background

Section 203(b)(1) of the Migrant and Seasonal Agricultural Worker Protection

Act (MSPA), and § 500.135(b) of Regulations, 29 CFR part 500, provide that any person who owns or controls a facility or real property to be used for housing migrant agricultural workers must obtain and post on site, a certificate of occupancy from the State, local, or Federal agency which conducted the housing safety and health inspection. The WH–520 is a form used to gather information to determine whether or not the facility meets the applicable safety and health standards, and also serves as the certificate of occupancy.

II. Review Focus

The Department of Labor is particularly interested in comments which:

• Evaluate whether the proposed collection of information is necessary for the proper performance of the functions of the agency, including whether the information will have practical utility;

• Evaluate the accuracy of the agency's estimate of the burden of the proposed collection of information, including the validity of the methodology and assumptions used;

• Enhance the quality, utility and clarity of the information to be collected; and

• Minimize the burden of the collection of information on those who are to respond, including through the use of appropriate automated, electronic, mechanical, or other technological collection techniques or other forms of information technology, *e.g.*, permitting electronic submissions of responses.

III. Current Actions

The Department of Labor seeks approval for the extension of this information collection in order to inspect and certify a migrant housing facility as meeting applicable safety and health standards under the law.

Type of Review: Extension.

Agency: Employment Standards Administration.

Title: Housing Occupancy Certificate—Migrant and Seasonal Agricultural Worker Protection Act.

OMB Number: 1215–0158.

Agency Number: WH–520.

Affected Public: Individuals or households; Businesses or other for-profit; Farms.

Frequency: On occasion.

Total Respondents/Responses: 60.

Time per Response 3 minutes (Reporting): 1 minute (Recordkeeping and Posting).

Estimated Total Burden Hours: 4.

Total Burden Cost (capital/startup): $0.

Total Burden Cost (operating/maintenance): $0.

Comments submitted in response to this notice will be summarized and/or included in the request for Office of Management and Budget approval of the information collection request; they will also become a matter of public record.

Dated: January 10, 2002.

Margaret J. Sherrill,

Chief, Branch of Management, Review, and Internal Control, Chief, Division of Financial Management, Office of Management, Administration and Planning, Employment Standards Administration.

[FR Doc. 02–1110 Filed 1–15–02; 8:45 am]

BILLING CODE 4510–27–P

DEPARTMENT OF LABOR

Mine Safety and Health Administration

Proposed Information Collection Request Submitted for Public Comment and Recommendations; Applications for Approval of Sanitary Toilet Facilities

ACTION: Notice.

SUMMARY: The Department of Labor, as part of its continuing effort to reduce paperwork and respondent burden, conducts a preclearance consultation program to provide the general public and Federal agencies with an opportunity to comment on proposed and/or continuing collections of information in accordance with the Paperwork Reduction Act of 1995 (PRA95) [44 U.S.C. 3506(c)(2)(A)]. This program helps to ensure that requested data can be provided in the desired format, reporting burden (time and financial resources) is minimized, collection instruments are clearly understood, and the impact of collection requirements on respondents can be properly assessed.

DATES: Submit comments on or before March 18, 2002.

ADDRESSES: Send comments to David L. Meyer, Director, Office of Administration and Management, 4015 Wilson Boulevard, Room 615, 4015, Arlington, VA 22203–1984. Commenters are encouraged to send their comments on a computer disk, or via Internet E-mail to *Meyer-David@msha.gov*, along with an original printed copy. Mr. Meyer can be reached at (703) 235–1383 (voice), or (703) 235–1563 (facsimile).

FOR FURTHER INFORMATION CONTACT: Charlene N. Barnard, Regulatory Specialist, Records Management Division, U.S. Department of Labor, Mine Safety and Health Administration, Room 725, 4015 Wilson Boulevard, Arlington, VA 22203–1984. Ms. Barnard can be reached at *barnard-charlene@msha.gov* (Internet E-mail), (703) 235–1470 (voice), or (703) 235–1563 (facsimile).

I. Background

The purpose of the collection of this information is to evaluate the sanitary features of manufactured toilets for use at coal mines. Protecting the health of miners is a vital function of the agency. Proper environmental sanitation is necessary to protect coal miners from illnesses that can be transported by human waste and also needed to maintain equalization of working conditions with other occupational groups.

II. Desired Focus of Comments

Currently, the Mine Safety and Health Administration (MSHA) is soliciting comments concerning the proposed reinstatement of the information collection related to the Approval of Sanitary Facilities at Coal Mines. MSHA is particularly interested in comments which:

• Evaluate whether the proposed collection of information is necessary for the proper performance of the functions of the agency, including

• Evaluate the accuracy of the agency's estimate of the burden of the proposed collection of information, including the validity of the methodology and assumptions used;

• Enhance the quality, utility, and clarity of the information to be collected; and

• Minimize the burden of the collection of information on those who are to respond, including through the use of appropriate automated, electronic, mechanical, or other technological collection techniques or other forms of information technology, e.g., permitting electronic submissions of responses.

A copy of the proposed information collection request may be viewed on the Internet by accessing the MSHA Home Page (*http://www.msha.gov*) and selecting ''Statutory and Regulatory Information'' then ''Paperwork Reduction Act submission (*http://www.msha.gov/regspwork.htm*)'', or by contacting the employee listed above in the **FOR FURTHER INFORMATION CONTACT** section of this notice of a hard copy.

III. Current Action

The agency feels that the information is necessary for the continuing evaluation of applications under the standards. No revisions or new proposals are included.

Type of Review: Reinstatement.

Agency: Mine Safety and Health Administration.

Title: Applications for Approval of Sanitary Toilet Facilities.

OMB Number: 1219–0101.

Affected Public: Business or other for profit.

Cite/Reference	Total respondents	Frequency	Total responses	Average time per response	Burden (in hours)
71.500	1	1	1	8	8
75.1712–6	1	1	1	8	8
Totals	2	2	2	16	16

Total Annualized Capital/Startup Costs: $0.

Total Operating and Maintenance Costs: $0.

Comments submitted in response to this notice will be summarized and/or included in the request for Office of Management and Budget approval of the information collection request; they will also become a matter of public record.

David L. Meyer,

Director, Office of Administration and Management.

[FR Doc. 02–1112 Filed 1–15–02; 8:45 am]

BILLING CODE 4510–43–M

NATIONAL AERONAUTICS AND SPACE ADMINISTRATION

[Notice 02–007]

NASA Advisory Council, Minority Business Resource Advisory Committee Meeting

AGENCY: National Aeronautics and Space Administration.

ACTION: Notice of meeting.

SUMMARY: In accordance with the Federal Advisory Committee Act, Public Law 92–463, as amended, the National Aeronautics and Space Administration announce a forthcoming meeting of the NASA Advisory Council, Minority Business Resource Advisory Committee.

DATES: Wednesday, January 30, 2002, 9 a.m. to 4 p.m., and Thursday, January 31, 2002, 9 a.m. to 12 noon.

ADDRESSES: NASA Ames Research Center, Center Directors Conference Room, Moffett Field, CA 94035–1000.

FOR FURTHER INFORMATION CONTACT: Mr. Ralph C. Thomas III, Code K, National Aeronautics and Space Administration, (202) 358–2088.

SUPPLEMENTARY INFORMATION: The meeting will be open to the public up to the seating capacity of the room. The agenda for the meeting is as follows:

- Review of Previous Meeting
- OSDBU Update of Activities
- NAC Meeting Report
- Overview of NASA Ames
- Overview of Small Business Program
- Public Comment
- Panel Discussion and Review
- Committee Panel Reports
- Status of Open Committee Recommendations
- New Business

It is imperative that the meeting be held on these dates to accommodate the scheduling priorities of the key participants. Visitors will be requested to sign a visitor's register.

Sylvia K. Kraemer,

Advisory Committee Management Officer, National Aeronautics and Space Administration.

[FR Doc. 02–1024 Filed 1–15–02; 8:45 am]

BILLING CODE 7510–01–P

NATIONAL AERONAUTICS AND SPACE ADMINISTRATION

[Notice 02–004]

Notice of Prospective Patent License

AGENCY: National Aeronautics and Space Administration.

ACTION: Notice of Prospective Patent License.

SUMMARY: NASA hereby gives notice that Boundary Layer Research Inc., of Everett, Washington has applied for an exclusive license to practice the invention disclosed in US Patent No. 5,738,298, entitled ''Tip Fence for Reduction of Lift-Generated Airframe Noise,'' which is assigned to the United States of America as represented by the Administrator of the National Aeronautics and Space Administration. Written objections to the prospective grant of a license should be sent to Ames Research Center.

DATES: Responses to this notice must be received by March 18, 2002.

FOR FURTHER INFORMATION CONTACT: Robert Padilla, Patent Counsel, NASA Ames Research Center, M/S 202A–3, Moffett Field, CA 94035–1000, (650) 604–5104.

Dated: January 5, 2002.

Robert M. Stephens,

Deputy General Counsel.

[FR Doc. 02–1021 Filed 1–15–02; 8:45 am]

BILLING CODE 7510–01–P

NATIONAL AERONAUTICS AND SPACE ADMINISTRATION

[Notice 02–003]

Notice of Prospective Copyright License

AGENCY: National Aeronautics and Space Administration.

ACTION: Notice of Prospective Patent License.

SUMMARY: NASA hereby gives notice that Maecker and Company, MakerToys Division of Silver Creek, New York, has applied for an exclusive copyright license to ARC–14263, ''Exploring Aeronautics Multimedia CD–ROM,'' which is assigned to the United States of America as represented by the Administrator of the National Aeronautics and Space Administration. Written objections to the prospective grant of a license should be sent to Ames Research Center.

DATES: Responses to this notice must be received by March 18, 2002.

FOR FURTHER INFORMATION CONTACT: Robert Padilla, Patent Counsel, NASA Ames Research Center, Mail Stop 202A–3, Moffett Field, CA 94035–1000, (650) 605–5104.

Dated: January, 4, 2002.

Robert M. Stephens,

Deputy General Counsel.

[FR Doc. 02–1020 Filed 1–15–02; 8:45 am]

BILLING CODE 7510–01–P

NATIONAL AERONAUTICS AND SPACE ADMINISTRATION

[Notice 02–006]

Notice of Prospective Patent License

AGENCY: National Aeronautics and Space Administration.

ACTION: Notice of Prospective Patent License.

SUMMARY: NASA hereby gives notice that Phoenix Systems International, Inc., of Pinebrook, New Jersey, has applied for an exclusive patent license to practice the inventions described and claimed in the following: U.S. Patent No. 6,039,783, ''Process and Equipment for Nitrogen Oxide Waste Conversion to Fertilizer,'' KSC–11884–2, ''Process and Equipment for Nitrogen Oxide Waste Conversion to Fertilizer,'' and KSC–12235–1, ''High Temperature Decomposition of Hydrogen Peroxide,'' which are assigned to the United States of America as represented by the Administrator of the National Aeronautics and Space Administration. Written objections to the prospective grant of a license should be sent to Randy Heald, Patent Counsel, John F. Kennedy Space Center, Kennedy Space Center, FL 32899.

DATES: Responses to this Notice must be received by January 31, 2002.

FOR FURTHER INFORMATION CONTACT: Randall M. Heald, Assistant Chief Counsel/Patent Counsel, John F. Kennedy Space Center, Mail Code: CC–A, Kennedy Space Center, FL 32899, telephone (321) 867–7214.

Dated: January 8, 2002.

Robert M. Stephens,

Deputy General Counsel.

[FR Doc. 02–1023 Filed 1–15–02; 8:45 am]

BILLING CODE 7510–01–P

NATIONAL AERONAUTICS AND SPACE ADMINISTRATION

[Notice 02–005]

Notice of Prospective Patent and Copyright License

AGENCY: National Aeronautics and Space Administration.

ACTION: Notice of Prospective Patent and Copyright License.

SUMMARY: NASA hereby gives notice that Williams Electrical Systems Company of Greensboro, North Carolina has applied for an exclusive patent license for the ''Remote Monitor Alarm System,'' U.S. Patent No. 5,485,142, and an exclusive copyright license for KSC–12314, ''Remote Monitoring and Alarm System,'' both technologies are assigned to the United States of America as represented by the Administrator of the National Aeronautics and Space Administration. Written objections to the prospective grant of a license should be sent to Randall M. Heald, Assistant Chief Counsel/Patent Counsel, and John F. Kennedy Space Center.

DATES: Responses to this Notice must be received by January 31, 2002.

FOR FURTHER INFORMATION CONTACT: Randall M. Heald, Assistant Chief Counsel/Patent Counsel, John F. Kennedy Space Center, Mail Code: CC–A, Kennedy Space Center, FL 32899, telephone (321) 867–7214.

Dated: January 4, 2002.

Robert M. Stephens,

Deputy General Counsel.

[FR Doc. 02–1022 Filed 1–15–02; 8:45 am]

BILLING CODE 7510–01–P

NATIONAL SCIENCE FOUNDATION

Agency Information Collection Activities: Proposed Collection; Comment Request

AGENCY: National Science Foundation.

ACTION: Notice.

SUMMARY: The National Science Foundation (NSF) is announcing plans to request clearance of this collection. In accordance with the requirement of section 3506(c)(2)(A) of the Paperwork Reduction Act of 1995, we are providing opportunity for public comment on this action. After obtaining and considering public comment, NSF will prepare the submission requesting OMB clearance of this collection for no longer than 3 years.

Comments are invited on: (a) Whether the proposed collection of information is necessary for the proper performance of the functions of the Agency, including whether the information shall have practical utility; (b) the accuracy of the Agency's estimate of the burden of the proposed collection of information; (c) ways to enhance the quality, utility, and clarity of the information on respondents, including through the use of automated collection techniques or other forms of information technology; and (d) ways to minimize the burden of the collection of information on respondents, including through the use of automated collection techniques or other forms of information technology.

DATES: Written comments should be received by March 18, 2002 to be assured of consideration. Comments received after that date would be considered to the extent practicable.

ADDRESSES: Written comments regarding the information collection and requests for copies of the proposed information collection request should be addressed to Suzanne Plimpton, Reports Clearance Officer, National Science Foundation, 4201 Wilson Blvd., Rm. 295, Arlington, VA 22230, or by e-mail to *splimpto@nsf.gov.*

FOR FURTHER INFORMATION CONTACT: Suzanne Plimpton on (703) 292–7556 or send email to *splimpto@nsf.gov.* Individuals who use a telecommunications device for the deaf (TDD) may call the Federal Information Relay Service (FIRS) at 1–800–877–8339 between 8 a.m. and 8 p.m., Eastern time, Monday through Friday.

SUPPLEMENTARY INFORMATION:

Title of Collection: The Cross Site Analysis of the Integrative Graduate Education and Research Traineeship (IGERT) Program.

OMB Control No.: 3145–0182.

EXPIRATION DATE OF APPROVAL: May 31, 2002.

Abstract: This document has been prepared to support the clearance of data collection instruments to be used in the evaluation of the Integrative Graduate Education and Research Traineeship (IGERT) Program. This site-based interview component is a part of a mixed method implementation and impact study and is comprised of on-site interviews of PIs, trainees, key faculty, and administrative personnel for all IGERT projects in their third year of funding (approximately 20 sites per year). It complements and verifies data from the previously cleared IGERT Distance Monitoring System (a Web-based survey completed annually by the project Principal Investigators, funded trainees, and non-funded associate students). While the Web-based survey provides prescribed and consistent data across all IGERT sites, site visits allow the collection of site-specific, in-depth information that answers questions raised by the Web-based collection and extends its scope. The two approaches inform and enrich each other to provide the clearest and most complete portrait possible of the evaluated program. Data are needed by NSF for program monitoring and to support program analysis, impact assessment, and evaluation activities.

Expected Respondents: Interview respondents at each IGERT project will include: the Principal Investigator, Co-Principal Investigators, Faculty associated with the project or advisors to trainees, Funded Trainees, Non-Funded Associates, and University Administrators.

Burden on the Public: Burden for respondents varies according to role, from 30 minutes to three hours. A total of 34 hours and 30 minutes interview time is projected for the estimated 44 respondents at each site. Over the average of 20 sites each year, this amounts to 880 respondents and a total

of 690 hours. Burden to the public is limited because all respondents are limited to those associated with IGERT projects in their third year of implementation.

Dated: January 11, 2002.

Suzanne H. Plimpton,

NSF Reports Clearance Officer.

[FR Doc. 02–1145 Filed 1–15–02; 8:45 am]

BILLING CODE 7555–01–M

NATIONAL SCIENCE FOUNDATION

Agency Information Collection Activities: Comment Request

AGENCY: National Science Foundation.

ACTION: Submission for OMB Review; Comment Request.

SUMMARY: The National Science Foundation (NSF) has submitted the following information collection requirement to OMB for review and clearance under the Paperwork Reduction Act of 1995, Pub. L. 104–13. Comments regarding (a) whether the collection of information is necessary for the proper performance of the functions of the agency, including whether the information will have practical utility; (b) the accuracy of the agency's estimate of burden including the validity of the methodology and assumptions used; (c) ways to enhance the quality, utility and clarity of the information to be collected; (d) ways to minimize the burden of the collection of information on those who are to respond, including through the use of appropriate automated, electronic, mechanical, or other technological collection techniques or other forms of information technology should be addressed to: Office of Information and Regulatory Affairs of OMB, Attention: Desk Officer for National Science Foundation 725—17th Street, NW Room 10235, Washington, DC 20503, and to Suzanne H. Plimpton, Reports Clearance Officer, National Science Foundation, 4201 Wilson Boulevard, Suite 295, Arlington, Virginia 22230 or send email to *splimpto@nsf.gov.* Comments regarding these information collections are best assured of having their full effect if received within 30 days of this notification. Copies of the submission(s) may be obtained by calling 703–292–7556.

NSF may not conduct or sponsor a collection of information unless the collection of information displays a currently valid OMB control number and the agency informs potential persons who are to respond to the collection of information that such persons are not required to respond to the collection of information unless it displays a currently valid OMB control number.

SUPPLEMENTARY INFORMATION:

Title: National Science Foundation Proposal Evaluation Process.

OMB Control Number: 3145–0060.

Proposed Project Proposal Evaluation Process

The National Science Foundation (NSF) is an independent Federal agency created by the National Science Foundation Act of 1950, as amended (42 U.S.C. 1861–75). The Act states the purpose of the NSF is ''to promote the progress of science; (and) to advance the national health, prosperity, and welfare'' by supporting research and education in all fields of science and engineering.''

From those first days, NSF has had a unique place in the Federal Government: It is responsible for the overall health of science and engineering across all disciplines. In contrast, other Federal agencies support research focused on specific missions such as health or defense. The Foundation also is committed to ensuring the nation's supply of scientists, engineers, and science and engineering educators.

The Foundation fulfills this responsibility by initiating and supporting merit-selected research and education projects in all the scientific and engineering disciplines. It does this through grants and cooperative agreements to more than 2,000 colleges, universities, K–12 school systems, businesses, informal science organizations and other research institutions throughout the U.S. The Foundation accounts for about one-fourth of Federal support to academic institutions for basic research.

The Foundation relies heavily on the advice and assistance of external advisory committees, ad–hoc proposal reviewers, and to other experts to ensure that the Foundation is able to reach fair and knowledgeable judgments. These scientists and educators come from colleges and universities, nonprofit research and education organizations, industry, and other Government agencies.

In making its decisions on proposals the counsel of these merit reviewers has proven invaluable to the Foundation both in the identification of meritorious projects and in providing sound basis for project restructuring.

Review of proposals may involve large panel sessions, small groups, or use of a mail-review system. Proposals are reviewed carefully by scientists or engineers who are expert in the particular field represented by the proposal. About 50% are reviewed exclusively by panels of reviewers who gather, usually in Arlington, VA, to discuss their advice as well as to deliver it. About 35% are reviewed first by mail reviewers expert in the particular field, then by panels, usually of persons with more diverse expertise, who help the NSF decide among proposals from multiple fields or sub-fields. Finally, about 15% are reviewed exclusively by mail.

Use of the Information

The information collected is used to support grant programs of the Foundation. The information collected on the proposal evaluation forms is used by the Foundation to determine the following criteria when awarding or declining proposals submitted to the Agency: (1) What is the intellectual merit of the proposed activity? (2) What are the broader impacts of the proposed activity?

The information collected on reviewer background questionnaires is used by managers to maintain an automated database of reviewers for the many disciplines represented by the proposals submitted to the Foundation. Information collected on gender, race, ethnicity is used in meeting NSF needs for data to permit response to Congressional and other queries into equity issues. These data are also used in the design, implementation, and monitoring of NSF efforts to increase the participation of various groups in science, engineering, and education.

Confidentiality

When a decision has been made (whether an award or a declination), verbatim copies of reviews, excluding the names of the reviewers, and summaries of review panel deliberations, if any, are provided to the PI. Proposers also may request and obtain any other releasable material in NSF's file on their proposal. Everything in the file except information that directly identifies either reviewers or other pending or declined proposals is usually releasable to the proposer.

While listings of panelists' names are released, the names of individual reviewers, associated with individual proposals, are not released to anyone.

Because the Foundation is committed to monitoring and identifying any real or apparent inequities based on gender, race, ethnicity, or disability of the proposed principal investigator(s)/project director(s) or the co-principal investigator(s)/co-project director(s), the Foundation also collects information regarding race, ethnicity, disability, and

gender. This information is also protected by the Privacy Act.

Burden on the Public

The Foundation estimates that anywhere from one hour to twenty hours may be required to review a proposal. It is estimated that approximately five hours are required to review an average proposal. Each proposal receives an average of 8.5 reviews.

Dated: January 10, 2002.

Suzanne H. Plimpton,

Reports Clearance Officer, National Science Foundation.

[FR Doc. 02–1025 Filed 1–15–02; 8:45 am]

BILLING CODE 7555–01–M

NATIONAL SCIENCE FOUNDATION

Sunshine Act Meeting

AGENCY HOLDING MEETING: National Science Foundation, National Science Board, Executive Committee.

DATE AND TIME: January 24, 2002, 1 p.m.–1:30 p.m., Closed Session; January 24, 2002, 1:30 p.m.–2 p.m., Open Session.

PLACE: The National Science Foundation, 4201 Wilson Boulevard, Room 1295, Arlington, VA 22230.

STATUS: Part of this meeting will be open to the public, part of this meeting will be closed to the public.

MATTERS TO BE CONSIDERED:

Thursday, January 24, 2002

Closed Session (1 p.m. to 1:30 p.m)

—Awards and Agreements

Open Session (1:30 p.m. to 2 p.m.)

—Director's Items
—Chairman's Items
—Program Approval: Math and Science Partnerships

Marta Cehelsky,

Executive Officer.

[FR Doc. 02–1185 Filed 1–11–02; 4:48 pm]

BILLING CODE 7555–01–M

NUCLEAR REGULATORY COMMISSION

[Docket Nos. 50–277 AND 50–278]

Exelon Generation Company, LLC; Notice of Withdrawal of Application for Amendments to Facility Operating Licenses

The U.S. Nuclear Regulatory Commission (the Commission) has granted the request of Exelon Generation Company, LLC (the licensee), to withdraw its February 8, 2001, application for proposed amendments to Facility Operating License Nos. DPR–44 and DPR–56 for the Peach Bottom Atomic Power Station, Units 2 and 3, located in York County, Pennsylvania.

The proposed amendments would have modified the facility and the facility Technical Specifications by replacing the interim corrective actions for thermal-hydraulic power oscillations with an automatic reactor scram from the output of the oscillation power range monitor.

The Commission had previously issued a Notice of Consideration of Issuance of Amendment published in the **Federal Register** on May 30, 2001 (66 FR 29354). However, by letter dated December 13, 2001, the licensee withdrew the proposed change.

For further details with respect to this action, see the application for amendment dated February 8, 2001, and the licensee's letter dated December 13, 2001, which withdrew the application for license amendment. Documents may be examined, and/or copied for a fee, at the NRC's Public Document Room, located at One White Flint North, 11555 Rockville Pike (first floor), Rockville, Maryland. Publicly available records will be accessible electronically from the Agencywide Documents Access and Management Systems (ADAMS) Public Electronic Reading Room on the internet at the NRC Web site, *http://www.nrc.gov.* Persons who do not have access to ADAMS or who encounter problems in accessing the documents located in ADAMS, should contact the NRC Public Document Room (PDR) Reference staff by telephone at 1–800–397–4209, 301–415–4737 or by email to pdr@nrc.gov.

Dated at Rockville, Maryland, this 10th day of January 2002.

For the Nuclear Regulatory Commission.

John P. Boska,

Project Manager, Project Directorate, Division of Licensing Project Management, Office of Nuclear Reactor Regulation.

[FR Doc. 02–1088 Filed 1–15–02; 8:45 am]

BILLING CODE 7590–01–P

NUCLEAR REGULATORY COMMISSION

Notice of Finding of No Significant Impact

SUMMARY: Notice is hereby given that the Nuclear Regulatory Commission has made a Finding of No Significant Impact (FONSI) with respect to the potential environmental impact related to the request by Alaron Corporation to utilize a wet waste processing system to dry high-solids wet wastes and aqueous liquid wastes in their Wampum, Pennsylvania facility.

FOR FURTHER INFORMATION CONTACT: John R. McGrath, Senior Health Physicist, Division of Nuclear Materials Safety, U.S. Nuclear Regulatory Commission, Region I, 475 Allendale Road, King of Prussia, Pennsylvania 19406. Telephone 610–337–5069.

SUPPLEMENTARY INFORMATION: The Alaron Corporation of Wampum, Pennsylvania holds a license issued by the U.S. Nuclear Regulatory Commission (NRC) for performing decontamination of equipment contaminated with radioactive material. Alaron has requested authority to add a system for the treatment of wet wastes by installing a system which includes a concentrate dryer, ultra-filtration, reverse-osmosis, demineralizers and steam generator on its site in Wampum.

Alaron estimates that approximately 214 curies of radioactive materials would be processed per year. Environmental radiation safety concerns include exposure due to airborne releases. To evaluate airborne releases, the licensee utilized a computer code (COMPLY, an EPA computer code for calculating the dose to individuals due to airborne releases) to assess dose from radionuclide emissions. The code assumed that an activity of 740 millicuries would be released in effluents to the air and projected a effective dose equivalent of 0.03 millirem/year to an individual at the nearest site boundary.

NRC has reviewed the assumptions used in the above described codes and concurs with the reported results. The maximum annual dose of 0.03 millirem is well below the regulatory limit of 100 millirem per year.

Copies of the EA and FONSI as well as supporting documentation are available for review at the NRC offices located at 475 Allendale Road, King of Prussia, Pennsylvania 19406, telephone number (610) 337–5000, during normal business hours.

John D. Kinneman,

Chief, Nuclear Materials Safety Branch 2, Division of Nuclear Material Safety, U.S. Nuclear Regulatory Commission, Region I.

Environmental Assessment of Proposal by Alaron Corporation To Perform Processing of Wet Wastes Utilizing a Multi-Methodology Treatment System

1. The Need for the Proposed Action

The Alaron Corporation of Wampum, Pennsylvania holds a license issued by the U.S. Nuclear Regulatory Commission (NRC) for performing

decontamination of equipment contaminated with radioactive material. Alaron uses a variety of techniques to perform the decontamination. In a letter dated May 31, 2001, Alaron requested an amendment to their license to authorize a wet waste processing system to dry high-solids wet wastes and aqueous liquid wastes in their Wampum facility. The system will be supplied by NUKEM Nuclear Technologies and includes a concentrate dryer, ultra-filtration units, reverse-osmosis units, demineralizers, steam generator and holding tanks. The purpose of this Environmental Assessment is to determine whether or not the proposed action could contribute to significant impacts on the human environment.

2. Alternatives to the Proposed Action

The only credible alternative is to not allow Alaron to install and use the treatment system. Relocation of the unit to another part of the site would not alter the environmental impact of the operation of the unit. To allow the use of some components of the system and not others could actually result in an increase in the amount of activity released to the environment.

3. The Environmental Impacts of the Proposed Action

Alaron is located on a 24 acre site in the Point Industrial Park, Wampum, Pennsylvania. Building F1 is a 67,800 ft^2 steel frame and steel wall building with a flat synthetic membrane type roof. The proposed wet waste processing system would be located inside a curbed area at the east end of the F1 Annex. The F1 Annex is located on the east side of the F1 Building and is a steel frame, steel walled building 32 feet wide and 88 feet long. The curbed area in the F1 Annex is capable of holding all of the contaminated liquid in the wet waste system. The NUKEM system consists of a number of water treatment components, including a concentrate dryer (CD), an ultra-filtration (UF) unit, a reverse osmosis (RO) unit, two demineralizers, and a steam generator. Wet waste will arrive by truck and will be transferred to one of two 1400 gallon sludge tanks inside the curbed area of the F1 Annex using a pneumatic pump through a double containment transfer hose.

Alaron's License No. 37–20826–01 was last renewed in its entirety on December 3, 1998. As part of that renewal, NRC issued an Environmental Assessment (NUREG/CR–5549) and published a Finding of No Significant Impact in the **Federal Register** on December 2, 1998. The Environmental Assessment found that no atmospheric emissions containing radioactive contaminants were expected to be released from the operation as then licensed. This was based on the fact that potentially contaminated air within work areas is cycled through HEPA filters and exhausted back into the building. Alaron recognized, though, that fugitive emissions, through doors, vents, etc. exist and a conservative estimate of an annual dose to the nearest residence was calculated to be 0.26 millirem. 10 CFR 20.1301 requires that each licensee conduct operations so that the total effective dose equivalent to individual members of the public from the licensed operation does not exceed 0.1 rem (100 millirem) in a year.

The installation of this waste treatment system would add an airborne release point at the Alaron facility. Steam from the steam generator will be vented through an exhaust stack on the roof of the F1 Building. Most of the radioactivity in the wet waste to be processed will be removed by the various treatment methods in the system and will be disposed of as solid waste. After being cleaned by passing through the system, the cleaned or polished water feeds the steam generator. Steam from the steam generator is exhausted through the stack.

Alaron estimates that the wet waste processing system will process liquid, sludge and/or resin waste whose isotopic distribution is typical of waste currently being disposed from nuclear power facilities. Based on the estimated waste throughput, approximately 214 curies of radioactive material will be processed per year. Assuming that all of the H–3 activity will become airborne, that the polished water feed to the steam generator contains other isotopes at 10 CFR Part 20 effluent limits, and that all of the radioactivity in the feed is released, the total activity emitted per year would be about 740 millicuries. The licensee performed dose calculations using the computer code COMPLY (an EPA computer code for calculating the dose to individuals due to airborne releases) which projects an effective dose equivalent of 0.03 millirem/year to an individual at the nearest site boundary as a result of the estimated release. NRC has performed a dose assessment of the proposal and agrees with the basic assumptions and results of the licensee's analysis.

With regard to direct radiation exposure, the licensee plans to conduct cleaning and back flush evolutions that will assure that accumulation of radioactive material on filter media will not result in high radiation levels around the unit. In addition, there will be shielding in place to avoid creation of high radiation levels. The maximum radiation levels is expected to be 50 millirem per hour one foot from the Concentrate Dryer, *i.e.* within the restricted area. Radiation levels at the closest unrestricted area, including the contribution from existing operations, will be about 10 microrem per hour.

4. Conclusion

In view of the fact that the additional dose of 0.03 millirem/year to an individual at the nearest site boundary as a result of the proposed amendment is a small fraction of the dose attributed to fugitive emissions to an individual at the nearest residence as a result of existing operations, the staff concludes that the proposed action will have a negligible impact on the environment.

[FR Doc. 02–1090 Filed 1–15–02; 8:45 am]
BILLING CODE 7590–01–P

NUCLEAR REGULATORY COMMISSION

[Docket No. 70–27]

Environmental Assessment and Finding of No Significant Impact of License Amendment for BWX Technologies, Inc., and Notice of Opportunity To Request a Hearing

AGENCY: Nuclear Regulatory Commission.

ACTION: Amendment of BWX Technologies, Inc., Materials License SNM–42 to authorize the installation and use of the Metal Dissolution Facility.

The U.S. Nuclear Regulatory Commission is considering the amendment of Special Nuclear Material License SNM–42 to authorize the installation and use of the Metal Dissolution Facility at the BWX Technologies, Inc., facility located in Lynchburg, VA, and has prepared an Environmental Assessment in support of this action.

Environmental Assessment

1.0 Introduction

1.1 Background

The Nuclear Regulatory Commission (NRC) staff has received a license request, dated August 7, 2001, and a revision to that submittal dated December 18, 2001. The request is to amend SNM–42 to authorize the installation and use of the Metal Dissolution Facility (MDF) for the dissolution of high enriched uranium (HEU) metal to support BWXT's downblending operations. The purpose of this document is to assess the

environmental consequences of the proposed license amendment.

The BWXT facility in Lynchburg, VA, is authorized under SNM–42 to possess nuclear materials for the fabrication and assembly of nuclear fuel components. The facility supports the U.S. naval reactor program, fabricates research and university reactor components, and manufactures compact reactor fuel elements. The facility also performs recovery of scrap uranium. Research and development activities related to the fabrication of nuclear fuel components are also conducted.

1.2 Review Scope

This environmental assessment (EA) serves to present information and analysis for determining whether to issue a Finding of No Significant Impact (FONSI) or to prepare an Environmental Impact Statement (EIS). Should the NRC issue a FONSI, no EIS would be prepared and the license amendment would be granted.

1.3 Proposed Action

The proposed action is to amend NRC Materials License SNM–42 to authorize the installation and use of the MDF for the dissolution of HEU metal to support BWXT's downblending operations. The MDF will be used to receive, store, dissolve HEU metal ranging from 20 to 97 percent uranium-235 (U–235). The MDF will support other processing areas and will be located within the Bay 15A Material Access Area (MAA). The building is already in place, so there will be no new construction on the BWXT site. The building is approximately 37 feet long, 20 feet wide, and 18 feet high.

The purpose of the MDF is to produce a homogeneous uranyl nitrate solution with a uranium concentration of approximately 400 grams/liter (g/l). The first step in the MDF is the weighing out of an appropriate amount of HEU in a charging basket in a ventilated glove box. The charging basket is then transferred via a lift to a dissolver digester. Measured quantities of nitric acid and deionized water are added in the dissolver to dissolve the HEU. The resulting mixture is then heated to approximately 180 degrees Fahrenheit and circulated until a homogeneous uranyl nitrate solution is made. This homogeneous uranyl nitrate solution is then pumped through filters into a process monitoring column where the solution is circulated, weighed, and sampled for U–235 concentration. The solution is then transferred via a manually activated pump to one of five storage columns where it is retained until required for blending with depleted or low enriched uranium.

1.4 Purpose and Need for Proposed Action

The proposed action would allow the licensee to install and operate the MDF. The operation of the MDF is needed to downblend HEU in support of HEU disposition for the Department of Energy. The MDF is expected to operate for many years.

1.5 Alternatives

The alternatives available to the NRC are:

1. Approve the license amendment request as submitted;
2. Approve the license amendment with restrictions; or
3. Deny the amendment request.

2.0 Affected Environment

The affected environment for Alternatives 1 and 2 is the BWXT site. A full description of the site and its characteristics is given in the 1995 Environmental Assessment (EA) for the Renewal of the NRC license for BWXT. The BWXT facility is located on a 525 acre (2 km^2) site in the northeastern corner of Campbell County, approximately 5 miles (8 km) east of Lynchburg, Virginia. This site is located in a generally rural area, consisting primarily of rolling hills with gentle slopes, farm land, and woodlands.

3.0 Effluent Releases and Monitoring

A full description of the effluent monitoring program at the site is provided in the 1995 Environmental Assessment for the Renewal of the NRC license for BWXT. Monitoring programs at the BWXT facility comprise effluent monitoring of air and water and environmental monitoring of various media (air, soil, vegetation, and groundwater). This program provides a basis for evaluation of public health and safety impacts, for establishing compliance with environmental regulations, and for development of mitigation measures if necessary. The monitoring program is not expected to change as a result of the proposed action. The NRC has reviewed the location of the environmental monitoring program sampling points, the frequency of sample collection, and the trends of the sampling program results in conjunction with the environmental pathway and exposure analysis and concluded that the monitoring program provides adequate protection of public health and safety.

Gaseous, liquid, and solid wastes are produced at the BWXT site. These wastes are categorized as low-level radioactive, nonradioactive, hazardous, or mixed wastes. A description of each of these waste categories, control strategies, and an estimate of release quantities is provided in the 1995 Environmental Assessment for the Renewal of the NRC license for BWXT.

The amendment request is expected to have no impact on the liquid and solid wastes released from the site. Routine liquid radiological and chemical releases from the MDF are not planned.

A new exhaust scrubber will be used to maintain airborne releases from the MDF within NRC limits. The dissolvers will be vented to a scrubber that will provide removal of uranium and NO_X from the exhaust gases using a two-stage oxidation/absorption system. Local warning indicators and controls will be provided in the U-Metal Dissolution area for monitoring and control of the scrubber operation. BWXT has conservatively estimated that the offsite exposure from operation of the new exhaust scrubber will be less than 0.005 millirem per year. The NRC staff has reviewed the exposure estimate and has determined that it is acceptable.

4.0 Environmental Impacts of Proposed Action and Alternatives

4.1 Occupational and Public Health

Use of the MDF will not include any change in the type or form of special nuclear material (SNM) or any new or different operations from those currently authorized under BWXT's license. However, the amounts of HEU metal that will be processed will be higher but within BWXT's license limits. A new exhaust scrubber will be used to maintain airborne releases within NRC limits. The impacts of normal operation of the site were evaluated in 1995 Environmental Assessment (EA) for the Renewal of the NRC license for BWXT. The total effective dose equivalent (TEDE) for members of the public from the normal operations at the BWXT site was calculated to be 0.024 mrem per year. BWXT has conservatively estimated that the offsite exposure from operation of the new exhaust scrubber will be less than 0.005 millirem per year. The increase in offsite exposure due to operation of the MDF is considered insignificant because the new predicted TEDE (0.029 mrem/yr) remains well below the 10 CFR 20 limit of 100 mrem for a member of the public.

Three employees will be working in the MDF. BWXT has conservatively estimated that the three employees will increase the sites cumulative exposure by about 6.0 person-rem based on the

highest individual exposure in 2000 of 2.0 person-rem. Comparing this to the sites 2000 cumulative exposure of 204.9 person-rem, results in an insignificant increase of only 2.9 percent.

4.2 Water Resources and Biota

No liquid process effluents will be released by operation of the facility and there will be no withdrawals from waterways to operate this process. Thus there will be no impacts to water resources (including groundwater) or biota from the operation of the MDF, under normal conditions.

4.3 Geology and Seismology

The operation of the MDF will have no impact on geology or seismology. The process will be performed in an existing facility on the site, therefore there will be no new construction as part of this amendment application. For example, no deep well injection of wastewater would occur that could modify seismic activity or alter geology.

4.4 Soils

Soils will not be impacted as a result of the operation of the MDF. There will be no physical disturbance of soils, and there will not be any releases of process materials to soils as a result of normal operations.

4.5 Air Quality

The NRC staff has determined that the proposed amendment will have minimal impact on air quality. As discussed above, a scrubber system will be used to maintain radiological airborne releases within NRC limits. The scrubber system will also be permitted by the State of Virginia to control non-radiological releases.

4.6 Demography, Cultural and Historic Resources

The NRC staff has determined that the proposed amendment will not impact demography, or cultural or historic resources. A full description of these parameters is given in the 1995 Environmental Assessment for Renewal.

4.7 Impacts Due to Accident Conditions

In accordance with 10 CFR 70.61, BWXT is required to limit the risk of each credible high or intermediate consequence event through the application of engineered and/or administrative controls. Also nuclear criticality events must be limited through assurance that all processes are maintained at subcritical levels. The analyses for these events were provided by BWXT in the amendment request submittals dated August 7, and December 18, 2001.

The impacts due to accident conditions will be evaluated and discussed in the Safety Evaluation Report which will be prepared by the NRC in conjunction with this document. Therefore, impacts due to accident conditions were not evaluated in this document.

4.8 Alternatives

The action that the NRC is considering is approval of an amendment request to Materials license SNM–42 issued pursuant to 10 CFR Part 70. The proposed action is to amend NRC Materials License SNM–42 to authorize the use of the MDF. The alternatives available to the NRC are:

1. Approve the license amendment request as submitted;
2. Approve the license amendment request with restrictions; or
3. Deny the amendment request.

Based on its review, the NRC staff has concluded that the environmental impacts associated with the proposed action are insignificant. Thus, the staff considers that Alternative 1 is the appropriate alternative for selection.

5.0 Agencies and Persons Contacted

The NRC contacted the Director of Radiological Health at the Virginia Department of Health (VDH) January 2, 2002 concerning this request. The Director reviewed the draft document and concluded that the Environmental Assessment does not contain any issues that may be objectionable to VDH.

Because the proposed action is entirely within existing facilities, the NRC has concluded that there is no potential to affect endangered species or historic resources, and therefore consultation with the State Historic Preservation Society and the U.S. Fish and Wildlife Service was not necessary.

6.0 References

U.S. Nuclear Regulatory Commission (NRC), August 1995, ''Environmental Assessment for Renewal of Special Nuclear Material License SNM–42.''

BWX Technologies, August 7, 2001, Letter from Arne Olson to Director of Office of Nuclear Materials Safety and Safeguards, Amendment of License SNM–42.

7.0 Conclusions

Based on an evaluation of the environmental impacts of the amendment request, the NRC has determined that the proper action is to issue a FONSI in the **Federal Register**. The NRC staff considered the environmental consequences of amending NRC Materials License SNM–42 to authorize the operation of the MDF and have determined that the approval of the request will have no significant effect on public health and safety or the environment.

Finding of No Significant Impact

The Commission has prepared the above Environmental Assessment related to the amendment of Special Nuclear Material License SNM–42. On the basis of the assessment, the Commission has concluded that environmental impacts associated with the proposed action would not be significant and do not warrant the preparation of an Environmental Impact Statement. Accordingly, it has been determined that a Finding of No Significant Impact is appropriate.

In accordance with 10 CFR 2.790 of the NRC's ''Rules of Practice,'' the Environmental Assessment and the documents related to this proposed action will be available electronically for public inspection from the Publicly Available Records (PARS) component of NRC's document system (ADAMS). ADAMS is accessible from the NRC Web site at *http://www.nrc.gov/NRC/ADAMS/index.html* (the Public Electronic Reading Room).

Opportunity for a Hearing

Based on the EA and accompanying safety evaluation, NRC is preparing to amend License SNM–42. The NRC hereby provides that this is a proceeding on an application for amendment of a license falling within the scope of Subpart L, ''Informal Hearing Procedures for Adjudication in Materials Licensing Proceedings,'' of NRC's rules and practice for domestic licensing proceedings in 10 CFR part 2. Pursuant to Section 2.1205(a), any person whose interest may be affected by this proceeding may file a request for a hearing in accordance with Section 2.1205(d). A request for a hearing must be filed within thirty (30) days of the date of publication of this **Federal Register** notice.

A request for hearing or petition for leave to intervene must be filed with the Secretary of the Commission, U.S. Nuclear Regulatory Commission either:

1. By delivery to the Rulemakings and Adjudications Staff of the Secretary at One White Flint North, 11555 Rockville Pike, Rockville, MD 20852–2738; or
2. By mail or telegram addressed to the Secretary, U.S. Nuclear Regulatory Commission, Washington, DC 20555–0001. Attention: Rulemakings and Adjudications Staff.

In addition to meeting other applicable requirements of 10 CFR part

2 of the NRC's regulations, a request for a hearing filed by a person other than an applicant must describe in detail:

1. The interest of the requester in the proceeding;

2. How that interest may be affected by the results of the proceeding, including the reasons why the requestor should be permitted a hearing, with particular reference to the factors set out in Section 2.1205(h).

3. The requester's areas of concern about the licensing activity that is the subject matter of the proceeding; and

4. The circumstances establishing that the request for a hearing is timely in accordance with Section 2.1205(d).

In accordance with 10 CFR Section 2.1205(f), each request for a hearing must also be served, by delivering it personally or by mail to:

1. The applicant, BWX Technologies, Inc., P.O. Box 785, Lynchburg, VA 24505–0785; and

2. The NRC staff, by delivering to the Executive Director for Operations, One White Flint North, 11555 Rockville Pike, Rockville, MD 20852, or by mail, addressed to the Executive Director for Operations, U.S. Nuclear Regulatory Commission, Washington, DC 20555.

The NRC contact for this licensing action is Edwin Flack, who may be contacted at (301) 415–8115 or by e-mail at edf@nrc.gov for more information about the licensing action.

Dated at Rockville, Maryland, this 9th day of January 2002.

For the Nuclear Regulatory Commission.

Lidia Roché,

Acting Chief, Fuel Cycle Licensing Branch, Division of Fuel Cycle Safety and Safeguards, Office of Nuclear Material Safety and Safeguards.

[FR Doc. 02–1089 Filed 1–15–02; 8:45 am]

BILLING CODE 7590–01–P

SECURITIES AND EXCHANGE COMMISSION

Existing Collection; Comment Request

Upon Written Request, Copies Available From: Securities and Exchange Commission, Office of Filings and Information Services, Washington, DC 20549.

Extension:

Rule 7d–1, OMB Control No. 3235–0311, SEC File No. 270–176

Notice is hereby given that, pursuant to the Paperwork Reduction Act of 1995 (44 U.S.C. 3501–3520), the Securities and Exchange Commission (''Commission'') is soliciting comments on the collections of information summarized below. The Commission plans to submit these existing collections of information to the Office of Management and Budget for extension and approval.

Section 7(d) of the Investment Company Act of 1940 [15 U.S.C. 80a–7(d)] (the ''Act'' or ''Investment Company Act'') requires an investment company (''fund'') organized outside the United States (''foreign fund'') to obtain an order from the Commission allowing the fund to register under the Act before making a public offering of its securities through the United States mail or any means of interstate commerce. The Commission may issue an order only if it finds that it is both legally and practically feasible effectively to enforce the provisions of the Act against the foreign fund, and that the registration of the fund is consistent with the public interest and protection of investors.

Rule 7d–1 [17 CFR 270.7d–1] under the Act, which was adopted in 1954, specifies the conditions under which a Canadian management investment company (''Canadian fund'') may request an order from the Commission permitting it to register under the Act. Although rule 7d–1 by its terms applies only to Canadian funds, other foreign funds generally have agreed to comply with the requirements of rule 7d–1 as a prerequisite to receiving an order permitting those foreign funds' registration under the Act.

The rule requires a Canadian fund that wishes to register to file an application with the Commission that contains various undertakings and agreements by the fund. Certain of these undertakings and agreements, in turn, impose the following additional information collection requirements:

(1) The fund must file agreements between the fund and its directors, officers, and service providers requiring them to comply with the fund's charter and bylaws, the Act, and certain other obligations relating to the undertakings and agreements in the application;

(2) The fund and each of its directors, officers, and investment advisers that is not a U.S. resident, must file an irrevocable designation of the fund's custodian in the United States as agent for service of process;

(3) The fund's charter and bylaws must provide that (a) the fund will comply with certain provisions of the Act applicable to all funds, (b) the fund will maintain originals and copies of its books and records in the United States, and (c) the fund's contracts with its custodian, investment adviser, and principal underwriter, will contain certain terms, including a requirement that the adviser maintain originals or copies of pertinent records in the United States;

(4) The funds contracts with service providers will require that the provider perform the contract in accordance with the Act, the Securities Act of 1933 [15 U.S.C. 77a–77z–3], and the Securities Exchange Act of 1934 [15 U.S.C. 78a–78mm], as applicable; and

(5) The fund must file, and periodically revise, a list of persons affiliated with the fund or its adviser or underwriter.

Under section 7(d) of the Act the Commission may issue an order permitting a foreign fund's registration only if the Commission finds that ''by reason of special circumstances or arrangements, it is both legally and practically feasible effectively to enforce the provisions of the [Act].'' The information collection requirements are necessary to assure that the substantive provisions of the Act may be enforced as a matter of contract right in the United States or Canada by the fund's shareholders or by the Commission.

Certain information collection requirements in rule 7d–1 are associated with complying with the Act's provisions. These requirements are reflected in the information collection requirements applicable to those provisions for all registered funds.

The Commission believes that one fund is registered under rule 7d–1 and currently active. Apart from requirements under the Act applicable to all registered funds, rule 7d–1 imposes ongoing burdens to maintain records in the United States, and to update, as necessary, the fund's list of affiliated persons. The Commission staff estimates that the rule requires a total of three responses each year. The staff estimates that a respondent would make two responses each year under the rule, one response to maintain records in the United States and one response to update its list of affiliated persons. The Commission staff further estimates that a respondent's investment adviser would make one response each year under the rule to maintain records in the United States. Commission staff estimates that each recordkeeping response would require 6.25 hours each of secretarial and compliance clerk time at a cost of $13.48 and $12.77 per hour, respectively, and the response to update the list of affiliated persons would require 0.25 hours of secretarial time, for a total annual burden of 25.25 hours at a cost of $331.49. The estimated number of 25.25 burden hours is identical to the current allocation.

If a fund were to file an application under this rule, the Commission estimates that the rule would impose

initial information collection burdens (for filing an application, preparing the specified charter, bylaw, and contract provisions, designations of agents for service of process, and an initial list of affiliated persons, and establishing a means of keeping records in the United States) of approximately 90 hours for the fund and its associated persons. The Commission is not including these hours in its calculation of the annual burden because no foreign fund has applied under rule 7d–1 to register under the Act in the last three years.

After registration, a foreign fund may file a supplemental application seeking special relief designed for the fund's particular circumstances. Because rule 7d–1 does not mandate these applications and the fund determines whether to submit an application, the Commission has not allocated any burden hours for the applications.

The estimates of burden hours are made solely for the purposes of the Paperwork Reduction Act. The estimates are not derived from a comprehensive or even a representative survey or study of Commission rules and forms.

The Commission believes that the active registrant and its associated persons may spend (excluding the cost of burden hours) approximately $540 per year in maintaining records in the United States. These estimated costs include fees for a custodian or other agent to retain records, storage costs, and the costs of transmitting records.

If a Canadian or other foreign fund in the future applied to register under the Act under rule 7d–1, the fund initially might have capital and start-up costs (not including hourly burdens) of an estimated $17,280 to comply with the rule's initial information collection requirements. These costs include legal and processing-related fees for preparing the required documentation (such as the application, charter, bylaw, and contract provisions), designations for service of process, and the list of affiliated persons. Other related costs would include fees for establishing arrangements with a custodian or other agent for maintaining records in the United States, copying and transportation costs for records, and the costs of purchasing or leasing computer equipment, software, or other record storage equipment for records maintained in electronic or photographic form.

The Commission expects that a fund and its sponsors would incur these costs immediately, and that the annualized cost of the expenditures would be $17,280 in the first year. Some expenditures might involve capital improvements, such as computer equipment, having expected useful lives for which annualized figures beyond the first year would be meaningful. These annualized figures are not provided, however, because, in most cases, the expenses would be incurred immediately rather than on an annual basis. The Commission is not including these costs in its calculation of the annualized capital/start-up costs because no foreign fund has applied under rule 7d–1 to register under the Act pursuant to rule 7d–1 in the last three years.

We request written comment on: (a) Whether the collections of information are necessary for the proper performance of the functions of the Commission, including whether the information has practical utility; (b) the accuracy of the Commission's estimate of the burdens of the collection of information; (c) ways to enhance the quality, utility, and clarity of the information collected; and (d) ways to minimize the burden of the collection of information on respondents, including through the use of automated collection techniques or other forms of information technology. We will consider comments and suggestions submitted in writing within 60 days of this publication.

Direct your written comments to Michael E. Bartell, Associate Executive Director, Officer of Information Technology, Securities and Exchange Commission, Mail Stop 0–4, 450 5th Street, NW., Washington, DC 20549.

Dated: January 9, 2002.

Margaret H. McFarland,

Deputy Secretary.

[FR Doc. 02–1098 Filed 1–15–02; 8:45 am]

BILLING CODE 8010–01–M

SECURITIES AND EXCHANGE COMMISSION

[Release No. 34–45260; File No. SR–Amex–2001–19]

Self-Regulatory Organizations; Order Approving a Proposed Rule Change and Amendment Nos. 1, 2, 3 and 4 Thereto by the American Stock Exchange LLC Relating to Its Performance Evaluation and Allocations Procedures

January 9, 2002.

On March 19, 2001, the American Stock Exchange LLC (''Amex'' or ''Exchange'') filed with the Securities and Exchange Commission (''SEC'' or ''Commission''), pursuant to section 19(b)(1) of the Securities Exchange Act of 1934 (''Act'')[1] and Rule 19b–4 thereunder,[2] a proposed rule change to codify the Exchange's performance evaluation and allocations procedures. On May 31, 2001, the Exchange submitted Amendment No. 1 to the proposed rule change.[3] On August 13, 2001, the Exchange submitted Amendment No. 2 to the proposed rule change.[4] On August 27, 2001, the Exchange submitted Amendment No. 3 to the proposed rule change.[5] The proposed rule change, as amended, was published in the **Federal Register** on October 31, 2001.[6] On December 18, 2001, the Exchange submitted Amendment No. 4 to the proposed rule change.[7] The Commission received no comments on the proposed rule change. This order approves the proposed rule change, as amended, and approves Amendment No. 4 on an accelerated basis.

I. Description of the Proposed Rule Change

The Exchange proposes to adopt Amex Rules 26 and 27 to codify the

---

[1] 15 U.S.C. 78s(b)(1).

[2] 17 CFR 240.19b–4.

[3] *See* Letter from Bill Floyd-Jones, Jr., Assistant General Counsel, Legal and Regulatory, Amex, to Katherine A. England, Assistant Director, Division of Market Regulation (''Division''), Commission (May 31, 2001). Amendment No. 1 adds discussion to the purpose section of the proposal regarding the ability of the Performance Committee to take appropriate action should a member or member organization fail without a reasonable excuse to meet with the committee after receiving notice. In addition, Amendment No. 1 corrects structural and typographical errors that appeared in the proposed rule language.

[4] *See* Letter from Bill Floyd-Jones, Jr., Assistant General Counsel, Legal and Regulatory, Amex, to Katherine A. England, Assistant Director, Division, Commission (August 10, 2001). Amendment No. 2 adds a reference to the Special Allocations Committee in the proposal and proposed rule text; adds allocations procedures for structured products and Exchange Traded Funds; and makes technical changes to the proposed rule test.

[5] *See* Letter from Bill Floyd-Jones, Jr., Assistant General Counsel, Legal and Regulatory, Amex, to Katherine A. England, Assistant Director, Division, Commission (August 24, 2001). Amendment No. 3 clarifies the Performance and Allocations Committee review procedures.

[6] *See* Securities Exchange Act Release No. 44972, (October 23, 2001), 66 FR 55031 (SR–Amex–2001–19).

[7] *See* Letter from Geraldine Brindisi, Vice President and Corporate Secretary, Amex, to Katherine A. England, Assistant Director, Division of Market Regulation (''Division''), Commission (December 14, 2001). Amendment No. 4 (1) clarifies that the Adjudicatory Council shall review the written statements and supporting documents submitted by the appellant and Committee in connection with the appeal; (2) specifies in the proposed rule text that the specialist will receive written notice or notice will be posted on one of the Exchange's websites of allocation decisions by the Allocations Committee; (3) decreases the number of days an appellant would have to submit a timely application for review; and (4) makes technical changes to the proposed rule text.

Exchange's performance evaluation and allocations procedures in order to make them readily available in one accessible location. Performance evaluation is the process by which the Exchange reviews Floor member conduct and takes remedial action where necessary to improve performance. The registration of specialists (''allocations'') is the process by which the Exchange matches appropriate specialists to particular securities.

Proposed Rule 26 describes the composition of the Performance Committee, and allows the Performance Committee to delegate some or all its responsibilities to one or more subcommittees consisting of six persons. Proposed Rule 26 also describes the responsibilities of the Performance Committee with respect to specialists, registered traders, and brokers, including remedial actions available to the Performance Committee with respect to each group of Floor members.

Proposed Rule 27 describes the composition and responsibilities of the Options and Equities Allocations Committees. In addition, the Exchange represents that the Special Allocations Committee allocates securities that are not allocated by the Options or Equities Allocations Committees and securities with special characteristics as may be determined by the Chief Executive Officer of the Exchange or his or her designee.

II. Discussion

The Commission finds that the proposed rule change, as amended, is consistent with the requirements of the Act and the rules and regulations thereunder applicable to a national securities exchange.[8] In particular, the Commission finds that the proposal, as amended, is consistent with section 6(b)(5) of the Act,[9] which requires, among other things, that the Exchange's procedures are designed to prevent fraudulent and manipulative acts and practices, to promote just and equitable principles of trade, and, in general, to protect investors and the public interest.

The Commission believes that codifying the Exchange's performance evaluation and allocations procedures should help the Exchange to ensure quality markets by monitoring and encouraging the performance and competition among specialists and other Floor members, thereby protecting investors and the public interest.

[8] In approving this proposed rule change, the Commission has considered its impact on efficiency, competition, and capital formation. 15 U.S.C. 78c(f).

[9] 15 U.S.C. 78f(b)(5).

III. Amendment No. 4

The Commission finds good cause for approving Amendment No. 4 prior to the thirtieth day after notice of publication in the **Federal Register**. In addition to making minor technical changes to the proposed rule language, Amendment No. 4 (1) clarifies that the Adjudicatory Council shall review the written statements and supporting documents submitted by the appellant and Committee in connection with the appeal; (2) specifies in the proposed rule text that the specialist will receive written notice or notice will be posted on one of the Exchange's Web sites of allocation decisions by the Allocations Committee; and (3) decreases the number of days an appellant would have to submit a timely application for review.[10] The Commission finds that Amendment No. 4 to the proposed rule enhances the fairness of Amex procedures for the evaluation of specialists' performance and allocation measures. The Commission believes that it is not necessary to separately solicit comment on Amendment No. 4 before approving this proposal because it received no comments in response to the initial publication of the proposed rule change and Amendment No. 4 makes changes that improve the rule. The Commission therefore finds that the approval of Amendment No. 4 on an accelerated basis is appropriate.

IV. Solicitation of Comments

Interested persons are invited to submit written data, views and arguments concerning Amendment No. 4, including whether the amendment is consistent with the Act. Persons making written submissions should file six copies thereof with the Secretary, Securities and Exchange Commission, 450 Fifth Street, NW., Washington, DC 20549–0609. Copies of the submission, all subsequent amendments, all written statements with respect to the proposed rule change that are filed with the Commission, and all written communications relating to the proposed rule change between the Commission and any person, other than those that may be withheld from the public in accordance with the provisions of 5 U.S.C. 552, will be available for inspection and copying in the Commission's Public Reference Room. Copies of such filing will also be available for inspection and copying at the principal office of the Amex. All submissions should refer to File No. SR–Amex–2001–19 and should be submitted by February 6, 2002.

[10] The Amex, however, determined that it would not further amend the proposed rule to require that the Performance Committee maintain a verbatim record of its meetings, although the rule as proposed requires that a verbatim record of Adjudicatory Council proceedings be kept.

V. Conclusion

It Is Therefore Ordered, pursuant to section 19(b)(2) of the ACt,[11] that the proposed rule change (SR–AMEX–2001–19), as amended, is approved.

For the Commission, by the Division of Market Regulation, pursuant to the delegated authority.[12]

Margaret H. McFarland,

Deputy Secretary.

[FR Doc. 02–1099 Filed 1–15–02; 8:45 am]

BILLING CODE 8010–01–M

[11] 15 U.S.C. 78s(b)(2).

[12] 17 CFR 200.30–2(a)(12).

SECURITIES AND EXCHANGE COMMISSION

[Release No. 34–45259; File No. SR–NASD–2002–03]

Self-Regulatory Organizations; Notice of Filing and Immediate Effectiveness of Proposed Rule Change by the National Association of Securities Dealers, Inc. To Relieve Registered Representatives Serving in the Armed Forces From Continuing Education Requirements

January 9, 2002.

Pursuant to section 19(b)(1) of the Securities Exchange Act of 1934 (''Act''),[1] and Rule 19b–4 thereunder,[2] notice is hereby given that on January 7, 2002, the National Association of Securities Dealers, Inc. (''NASD''), through its wholly owned subsidiary, NASD Regulation, Inc. (''NASD Regulation''), filed with the Securities and Exchange Commission (''Commission'' or ''SEC'') the proposed rule change as described in Items I, II, and III below, which Items have been prepared by NASD Regulation. NASD Regulation filed the proposal pursuant to section 19(b)(3)(A) of the Act,[3] and Rule 19b–4(f)(1)[4] thereunder, in that the proposed rule change constitutes a stated policy, practice, or interpretation with respect to the meaning, administration, or enforcement of an existing rule, which renders the proposal effective upon filing with the Commission. The Commission is publishing this notice to solicit comments on the proposed rule change from interested persons.

[1] 15 U.S.C. 78s(b)(1).

[2] 17 CFR 240.19b–4.

[3] 15 U.S.C. 78s(b)(3)(A).

[4] 17 CFR 240.19b–4(f)(1).

I. Self-Regulatory Organization's Statement of the Terms of Substance of the Proposed Rule Change

NASD Regulation proposes to amend NASD IM–1000–2 to codify the staff's interpretive position regarding the relief from NASD Rule 1120, Continuing Education Requirements, for securities industry professionals who volunteer or are called into active military duty. The text of the proposed rule change is below. Proposed new language is in italics; proposed deletions are in brackets.

IM–1000–2. Status of Sole Proprietors and Registered Representatives Serving in the Armed Forces

Any *Registered* [registered] Representative of a member who volunteers or is called into the Armed Forces of the United States shall be placed, after proper notification to the Executive Office, upon inactive status and need not be re-registered by such member upon his *or her* return to active employment with the member.

Any member (Sole Proprietor) who temporarily closes his *or her* business by reason of volunteering or being called into the Armed Forces of the United States, shall be placed, after proper notification to the Executive Office, on inactive status until his *or her* return to active participation in the investment banking and securities business.

A Registered Representative who is placed on inactive status as set forth above shall not be included within the definition of ''Personnel'' for purposes of the dues or assessments as provided in Article VI of the By-Laws.

Any member placed on inactive status as set forth above shall not be required to pay dues or assessments during the pendency of such inactive status and shall not be required to pay an admission fee upon return to active participation in the investment banking and securities business.

A Registered Representative who is placed on inactive status as set forth above shall not be required to complete either of the Regulatory or Firm Elements of the continuing education requirements set forth in Rule 1120 during the pendency of such inactive status.

* * * * *

II. Self-Regulatory Organization's Statement of the Purpose of, and Statutory Basis for, the Proposed Rule Change

In its filing with the Commission, NASD Regulation included statements concerning the purpose of and basis for its proposal and discussed any comments it received regarding the proposal. The text of these statements may be examined at the places specified in Item IV below. NASD Regulation has prepared summaries, set forth in sections A, B and C below, of the most significant aspects of such statements.

A. Self-Regulatory Organization's Statement of the Purpose of, and Statutory Basis for, the Proposed Rule Change

1. Purpose

NASD IM–1000–2 (''the Interpretation'') addresses the registration status of sole proprietors and registered representatives serving in the armed forces. The Interpretation states that securities industry professionals who volunteer or are called into active military duty (''Active Duty Professionals'') will be placed in a specially designated ''inactive'' status once the NASD is notified of their military service, but will remain registered for NASD purposes. While the Interpretation does not address continuing education obligations with respect to Active Duty Professionals, NASD Regulation staff has interpreted Rule 1120 to relieve Active Duty Professionals from continuing education obligations for the period of time that they are on active duty. The proposed rule change codifies the staff's position through amendments to the Interpretation. The Securities Industry/Regulatory Council on Continuing Education (''CE Council'') supports the staff's views.[5]

NASD Regulation has, for the reasons set forth below, relieved Active Duty Professionals from continuing education requirements. Rule 1120(a)(2) provides that ''Unless otherwise determined by the Association, any registered persons who have not completed the Regulatory Element within the prescribed time frames will have their registrations deemed inactive until such time as the requirements of the program have been satisfied.'' A registered person may satisfy his or her Regulatory Element requirement at a Prometric Center in the United States and Canada, or at a VUE Center in Europe and the Pacific Rim. Because it is generally not practical for Active Duty Professionals to be at a facility that delivers the Regulatory Element, NASD Regulation believes that Active Duty Professionals should be relieved from fulfilling the Regulatory Element requirements that arise during the period of time that they are on active duty.

With respect to the Firm Element requirements of continuing education, Rule 1120(b)(1) provides that only persons who have ''direct contact with customers'' in the conduct of securities activities are subject to the Firm Element requirements. Active Duty Professionals are excluded from the Firm Element requirements because they do not have contact with customers. Accordingly, the proposed amendment to the Interpretation expressly states that Active Duty Professionals are not required to complete either of the Regulatory or Firm Elements of the continuing education requirements set forth in Rule 1120 during the pendency of such inactive status.

2. Statutory Basis

NASD Regulation believes that the proposed rule change is consistent with the provisions of section 15A(b)(6) of the Act,[6] which requires, among other things, that the Association's rules be designed to prevent fraudulent and manipulative acts and practices, to promote just and equitable principles of trade, and, in general to protect investors and the public interest. NASD Regulation believes that codifying the staff's interpretative position to relieve Active Duty Professionals from the NASD's continuing education requirements during the time they are on active duty is consistent with the protection of investors and the public interest.

B. Self-Regulatory Organization's Statement on Burden on Competition

NASD Regulation does not believe that the proposed rule change will result in any burden on competition that is not necessary or appropriate in furtherance of the purposes of the Act, as amended.

C. Self-Regulatory Organization's Statement on Comments on the Proposed Rule Change Received From Members, Participants or Others

Written comments were neither solicited nor received.

III. Date of Effectiveness of the Proposed Rule Change and Timing for Commission Action

The foregoing proposal has become effective pursuant to section 19(b)(3)(A) of the Act,[7] and Rule 19b–4(f)(1)[8]

[5] The CE Council, of which all of the self-regulatory organizations and 14 industry representatives are members, is responsible for the oversight of the continuing education program as a whole. The SEC and North American Securities Administrators Association also send liaisons to attend CE Council meetings.

[6] 15 U.S.C. 78o–3(b)(6).

[7] 15 U.S.C. 78s(b)(3)(A).

[8] 17 CFR 240.19b–4(f)(1).

thereunder, in that it constitutes a stated policy, practice, or interpretation with respect to the meeting, administration, or enforcement of an existing rule.

At any time within 60 days of the filing of the proposed rule change, the Commission may summarily abrogate such rule change if it appears to the Commission that such action is necessary or appropriate in the public interest, for the protection of investors, or otherwise in furtherance of the purposes of the Act.

IV. Solicitation of Comments

Interested persons are invited to submit written data, views, and arguments concerning the foregoing, including whether the proposal is consistent with the Act. Persons making written submissions should file six copies thereof with the Secretary, Securities and Exchange Commission, 450 Fifth Street, NW., Washington, DC 20549–0609. Copies of the submission, all subsequent amendments, all written statements with respect to the proposed rule change that are filed with the Commission, and all written communications relating to the proposed rule change between the Commission and any person, other than those that may be withheld from the public in accordance with the provisions of 5 U.S.C. 552, will be available for inspection and copying in the Commission's Public Reference Room. Copies of such filing will also be available for inspection and copying at the principal office of the NASD. All submissions should refer to file number SR–NASD–2002–03 and should be submitted by February 6, 2002.[9]

For the Commission, by the Division of Market Regulation, pursuant to delegated authority.

Margaret H. McFarland,

Deputy Secretary.

[FR Doc. 02–1103 Filed 1–15–02; 8:45 am]

BILLING CODE 8010–01–M

[9] 17 CFR 200.30–3(a)(12).

SECURITIES AND EXCHANGE COMMISSION

[Release No. 34–45261; File No. SR–NASD–00–02]

Self-Regulatory Organizations; Order Approving Proposed Rule Change by the National Association of Securities Dealers, Inc. Amending the NASD Code of Arbitration Procedure Rules 10335 and 10205(h) Relating to Injunctive Relief

January 9, 2002.

I. Introduction

On January 13, 2000, the National Association of Securities Dealers, Inc. (''NASD''), through its wholly-owned subsidiary NASD Regulation Inc. (''NASD Regulation'') filed with the Securities and Exchange Commission (''Commission''), pursuant to section 19(b)(1) of the Securities Exchange Act (''Exchange Act'') [1] and Rule 19b–4 thereunder,[2] a proposed rule change amending the NASD Code of Arbitration Procedure (''Code'') Rules 10335 and 10205(h) relating to injunctive relief.

NASD Regulation submitted to the Commission Amendment No. 1 to its proposed rule change on March 9, 2000 [3] and Amendment No. 2 on March 25, 2000.[4] On April 27, 2000, the proposed rule change, as amended, was published for comment in the **Federal Register**.[5] The Commission received 13 comment letters on the proposed rule change, as amended by Amendments No. 1 and 2.[6] On December 19, 2000, NASD, through NASD Dispute Resolution Inc. (''NASD Dispute Resolution''), filed Amendment No. 3 and a response to comments [7] and on December 21, 2000, filed a supplemental response to comments.[8] In response to Amendment No. 3 and NASD Supplemental Response, the Commission received two additional comment letters on the proposal.[9] NASD, through NASD Dispute Resolution, filed Amendment No. 4 and Amendment No. 5 on May 17, 2001 and August 10, 2001, respectively.[10] On October 25, 2001, the proposed rule change, as amended by Amendment Nos. 3, 4, and 5, was published for comment in the **Federal Register**.[11] The Commission received one additional comment letter on the amended proposal.[12] As discussed below, this

[1] 15 U.S.C. 78s(b)(1).

[2] 17 CFR 240.19b–4.

[3] *See* letter from Patrice Gliniecki, Vice President and Deputy General Counsel, NASD Regulation, to Katherine A. England, Assistant Director, Division of Market Regulation (''Division''), Commission, dated March 7, 2000 (''Amendment No. 1'').

[4] *See* letter from Patrice Gliniecki, Vice President and Deputy General Counsel, NASD Regulation, to Katherine A. England, Assistant Director, Division, Commission, dated March 24, 2000 (''Amendment No. 2'').

[5] *See* Securities Exchange Act Release No. 42606 (April 3, 2000), 65 FR 18405 (April 7, 2000).

[6] Letter from Alan Foxman, Esq. Chairman, National Association of Investment Professionals, Government and Regulatory Committee, and T. Sheridan O'Keefe, President, National Association of Investment Professionals, to Jonathan G. Katz, Secretary, Commission, dated April 26, 2000 (''Foxman Letter''); letter from Thomas M. Campbell, Smith Campbell & Paduano, to Katherine A. England, Assistant Director, Division, Commission, dated April 27, 2000 (''Campbell Letter''); letter from John W. Shaw and Jeffrey A. Ziesman, Berkowitz, Feldmiller, Stanton, Brandt, Williams & Stueve, LLP, counsel to Sutro & Co. Incorporated, to Secretary, Commission, dated April 28, 2000 (''Sutro Letter''); letter from Dana N. Pescosolido, Law Offices of Saul, Ewing, Weinberg & Green, counsel to Ferris, Baker Watts, Incorporated, Janney Montgomery Scott LLC, Legg Mason Wood Walker, Incorporated, Morgan Keegan & Company, Inc. and Raymond James & Associates, Inc. to Jonathan G. Katz, Secretary, Commission, dated April 28, 2000 (''Pescosolido Letter''); letter from Dan Jamieson, Public Investor, to Jonathan Katz, Secretary, Commission, dated May 1, 2000 (''Jamieson Letter''); e-mail from Joseph G. Kathrein Jr. to Commission, dated May 23, 2000 (''Kathrein E-mail''); letter from Gary R. Irwin, Vice President and Group Counsel, American Express Financial Corporation, American Express Financial Advisors, to Jonathan G. Katz, Secretary, Commission, dated May 25, 2000 (''Irwin Letter''); e-mail from Kosta, to Commission, dated July 10, 2000 (''Kosta E-mail''); e-mail from Michael A. Yoakum, to Commission, dated July 10, 2000 (''Yoakum E-mail''); e-mail from Frank Louis Blair Koucky III to Commission, dated July 11, 2000 (''Koucky E-mail''); e-mail from Gilbert A. Armour, Financial Consultant, Kirlin Securities, to Commission, dated July 11, 2000 (''Armour E-mail''); letter from Bob Chernow, to J. Katz, Secretary, Commission, dated July 10, 2000 (''Chernow Letter''); and letter from Dan Jamieson, to Jonathan Katz, Secretary, Commission, dated January 3, 2001 (''Jamieson Letter 2'').

[7] *See* letter from Laura Leedy Gansler, Counsel, NASD Dispute Resolution, to Katherine A. England, Assistant Director, Division, Commission, dated December 18, 2000 (''Amendment No. 3'').

[8] *See* letter from Laura Leedy Gansler, Counsel, NASD Dispute Resolution, to Katherine A. England, Assistant Director, Division, Commission, dated December 21, 2000 (''NASD Supplemental Response'')

[9] Letter from Dan Jamieson, to Jonathan Katz, Secretary, Commission, dated January 4, 2001 (''Jamieson Letter 3''); and letter from Dana N. Pescosolido, Saul Ewing LLP, to Katherine A. England, Assistant Director, Division, Commission, dated January 20, 2001 (''Pescosolido Letter 2,'' and together with Pescosolido Letter, ''Pescosolido Letters'').

[10] *See* letter from Laura Leedy Gansler, Counsel, NASD Dispute Resolution, to Florence Harmon, Senior Special Counsel, Division, Commission, dated May 17, 2001 (''Amendment No 4''), and letter from Laura Leedy Gansler, Counsel, NASD Dispute Resolution, to Florence Harmon, Senior Special Counsel, Division, Commission, dated August 10, 2001 (''Amendment No. 5'').

[11] *See* Securities Exchange Act Release No. 44950 (October 18, 2001), 66 FR 54041 (October 25, 2001) (''Second Release'').

[12] *See* letter from Dan Jamieson, to Jonathan Katz, Secretary, Commission, dated November 1, 2001 (''Jamieson Letter 4,'' and together with Jamieson Letter, Jamieson Letter 2 and Jamieson Letter 3, ''Jamieson Letters'').

order approves the proposed rule change, as amended.

II. Description

Background

NASD proposes to amend Rules 10335 and 10205(h) of the Code to simplify and clarify the procedures for obtaining injunctive relief in certain disputes subject to arbitration. Rule 10335, the NASD's pilot injunctive relief rule, provides procedures for obtaining interim injunctive relief in controversies involving member firms and associated persons in arbitration. NASD Rule 10335 currently provides that parties to arbitration may seek temporary injunctive relief within the arbitration process or from a court of competent jurisdiction. NASD represents that this rule has primarily been used in ''raiding cases,'' or cases involving the transfer of an employee to another firm. NASD Rule 10335 took effect on January 3, 1996 for a one-year pilot period. The Commission has periodically extended the initial pilot period in order to permit NASD Dispute Resolution to assess the effectiveness of the rule. The pilot rule is currently due to expire on July 1, 2002.[13]

NASD represents that the principal objectives of the amended proposal are to simplify and expedite the procedures for seeking immediate injunctive relief in intra-industry disputes and to fairly and effectively integrate court-ordered initial injunctive relief with the arbitration of the underlying claims in the same disputes.[14] The amended proposal would (i) eliminate the option of seeking temporary injunctive relief within the arbitration process by requiring parties to seek temporary injunctive relief in a court of competent jurisdiction; (ii) require simultaneous filing of an arbitration claim for permanent injunctive and all other relief; (iii) require arbitration to be expedited once interim relief has been granted; (iv) set forth the procedures for establishing the composition of the arbitration panel; (v) specify the applicable legal standard for granting or denying a request for permanent injunctive relief; (vi) address the effect of court-ordered temporary injunctive relief during and after arbitration; and (vii) address the allocation of arbitration fees, costs and expenses, and arbitrator honoraria.

Temporary Injunctive Relief

The proposed rule change would eliminate arbitration as a forum for seeking temporary injunctive relief. Parties would still be able to seek temporary injunctive relief, but only in a court of competent jurisdiction. Under the proposal, a party may seek temporary injunctive relief in court if another party has already filed a claim arising from the same dispute in arbitration, provided that an arbitration hearing on a request for permanent injunctive relief has not yet begun. NASD Dispute Resolution clarified that an arbitration hearing on permanent injunctive relief would not include preparations for the arbitration hearing, such as pre-hearing conferences or assembling an arbitration panel or resolving discovery or other pre-hearing matters.[15] The proposal would require any party seeking a temporary injunctive order from a court to simultaneously file a Statement of Claim in arbitration requesting permanent injunctive and all other relief.

Several commenters criticized the elimination of arbitration as a forum for the issue of temporary injunctive relief.[16] Two commenters argued that NASD did not offer any statistical data or evidence justifying the elimination of this option.[17] Three commenters believe that requiring parties to seek interim relief from courts and having the ultimate conflict resolved by arbitrators is inefficient and will increase the expense to the parties.[18] Another commenter argued that the experience and training of NASD arbitrators made them more qualified that judges to make decisions relating to temporary injunctive relief.[19] In response, NASD explained that its experience has shown that it is not possible to obtain temporary injunctive relief in arbitration as quickly as in court, due largely to the need to appoint and convene arbitrators specifically for each case.[20] One commenter responded by arguing that arbitration is the preferred option for some parties in spite of time delays.[21]

Commenters concerned about the interests of associated persons stated that eliminating arbitration as a forum for temporary injunctive relief favors the party requesting injunctive relief because these commenters believe that courts are more likely to grant injunctive relief than arbitrators.[22] NASD believes that this premise is flawed because the proposed NASD Rule 10335 does not govern when such relief is appropriate, either in court or in arbitration. NASD notes that the same substantive legal standards for granting injunctive relief apply in both forums. NASD contends that the elimination of the option of seeking temporary injunctive relief in arbitration would only discriminate against associated persons and investors if courts applied the applicable legal standards in a discriminatory manner. NASD believes that because there is no evidence that courts apply the applicable legal standard in a discriminatory manner, the elimination of the option of seeking temporary injunctive relief in arbitration is a procedural change designed to expedite this process and should not affect the likelihood of whether such relief is granted or denied.[23] One commenter responded by arguing that Rule 10335 is more than a procedural rule.[24]

The same commenters argued that injunctions are anticompetitive, as highly profitable for firms, are prejudicial to the investing public, and conflict with other NASD rules that protect customers' rights.[25] In response, NASD stated that while these questions may warrant attention, NASD Rule 10335 is not the appropriate vehicle for addressing them because it is a procedural rule.[26] In addition, NASD notes that temporary restraining orders were always an option under the pilot rule, which the Commission approved as consistent with the Exchange Act.[27]

[13] *See* Securities Exchange Act Release Act No. 45162 (December 18, 2001), 66 FR 66489 (December 26, 2001). The rules approved pursuant to this order supersede and replace the pilot program.

[14] *See* Second Release, *supra* note 11.

[15] Telephone call between Florence Harmon, Senior Special Counsel, Division, Commission, and Laura Leedy Gansler, Counsel, NASD Dispute Resolution, on January 3, 2002.

[16] *See* Foxman Letter, Jamieson Letter and Sutro Letter, *supra* note 6.

[17] *See* Foxman Letter and Jamieson Letters, *supra* notes 6, 9 and 12.

[18] *See* Foxman Letter, Sutro Letter, and Jamieson Letter, *supra* note 6.

[19] *See* Sutro Letter, *supra* note 6.

[20] *See* Amendment No. 3, *supra* note 7.

[21] *See* Pescosolido Letter 2, *supra* note 9.

[22] *See* Foxman Letter, Pescosolido Letter, Jamieson Letter, Kosta E-mail, Yoakum E-mail, Koucky E-mail, Armour E-mail, and Chernow Letter, *supra* note 6.

[23] *See* Amendment No. 3, *supra* note 7.

[24] *See* Pescosolido Letter 2, *supra* note 9.

[25] *See* Foxman Letter, Pescosolido Letter, Jamieson Letter, Kosta E-mail, Yoakum E-mail, Koucky E-mail, Armour E-mail, and Chernow Letter, *supra* note 6.

[26] *See* Amendment No. 3, *supra* note 7. We note that on December 21, 2001, NASD Dispute Resolution submitted a proposed rule change, which was effective upon filing, that expressly interprets NASD Rule 2110 to prohibit members from interfering with a customer's request to transfer his or her account in connection with the change in employment of the customer's registered representative, provided that the account is not subject to any lien for monies owed by the customer or other bona fide claim. *See* Securities Exchange Act Release No. 45239 (January 4, 2001) (pertaining to NASD IM–2110–7 Interfering With the Transfer of Customer Accounts in the Context of Employment Disputes).

[27] *See* Amendment No. 3, *supra* note 7.

Two comments made suggestions for improving the provision requiring simultaneous filing of the court and arbitration claims.[28] In response, NASD amended the proposal to require the party seeking temporary injunctive relief to simultaneously file with the Director of Arbitration a Statement of Claim requesting permanent injunctive and all other relief and to serve such Statement of Claim on all other parties in the same manner and at the same time as it is filed with the Director.[29] The proposal provides that the filing and service of both the court filed complaint seeking temporary injunctive relief and the simultaneous arbitration filed complaint seeking permanent injunctive and all other relief shall be made by facsimile, overnight delivery or messenger.[30]

Hearing or Request for Permanent Relief; Selection of Arbitrators; Appointment of Chairperson

The proposal initially provided that if a court issues a temporary injunctive order, the hearing on the request for permanent relief must begin within 15 calendar days of the date the court issued its temporary injunctive order. One commenter stated that parties' lawyers would be able to stall the arbitration hearing by claiming to be unavailable within 15 days.[31] Another commenter found the language unclear as to whether the hearing itself was required to begin or whether preparations for the hearing, such as assembling an arbitration panel, were required to have begun within 15 days.[32] In response, NASD amended the proposal by adding language to paragraph (a)(1) of proposed Rule 10335 to clarify that the hearing itself would be required to begin within 15 days of the date a court issues a temporary injunctive order.[33] NASD Dispute Resolution clarified that the arbitration hearing on the merits must begin within 15 calendar days of the date that the court issues the order, and that this does not include preparations for the arbitration hearing, such as pre-hearing conferences or assembling a panel or resolving discovery disputes or other pre-hearing matters.[34]

Under the proposed rule change, the hearing on the request for permanent injunctive relief would be heard by a panel of three arbitrators. In cases in which the underlying dispute would be heard by a panel of non-public arbitrators as defined in NASD Rule 10308(a)(4), the three arbitrators would be non-public. In cases in which the underlying dispute would be heard by a public arbitrator or panel consisting of a majority of public arbitrators under NASD Rule 10202, the three arbitrator panel hearing the request for permanent relief would consist of a majority of public arbitrators as defined in NASD Rule 10308(a)(5).

In cases in which all of the members of the arbitration panel are non-public, the Director of Arbitration would generate and provide to the parties a list of seven arbitrators from a national roster of arbitrators. NASD originally proposed that at least a majority of the arbitrators on the list would be lawyers specializing in injunctive relief. Each party would be able to exercise one strike to the arbitrators on the list.

In cases in which the panel of arbitrators consists of a majority of public arbitrators, the Director of Arbitration would generate and provide to the parties a list of nine arbitrators from a national roster of arbitrators. NASD originally proposed that at least a majority of the arbitrators in those cases would be (1) public arbitrators and (2) lawyers specializing in injunctive relief. In those cases, the parties would be able to exercise two strikes to the arbitrators on the list.

Regardless of the number of strikes given to the parties, the rule would incorporate by reference other NASD Code of Arbitration rules providing unlimited strikes for cause, so that parties would always be able to strike arbitrators who were unqualified due to conflicts of interest or for other reasons constituting cause.

Under the proposed rule change, the parties would be required to inform the Director of their preference of chairperson of the arbitration panel by the close of business on the next business day after receiving notice of the panel members. If the parties did not agree on a chairperson within that time, the Director would select the chairperson. The proposal initially provided that, in cases in which the panel consists of a majority of public arbitrators, the chairperson would be one of the public arbitrators who is a lawyer specializing in injunctive relief; and in cases in which the panel consists of non-public arbitrators, the chairperson would be a lawyer specializing in injunctive relief. The proposal initially provided that, whenever possible, the Director would select as chairperson the lawyer specializing in injunctive relief whom the parties have ranked the highest. The proposed rule change also provides that the Director of Arbitration may exercise discretionary authority and make any decision that is consistent with the purposes of the rule and the arbitrator selection rule (NASD Rule 10308) to facilitate the appointment of arbitration panels and the selection of the chairperson.

Several commenters concerned with the interests of associated persons expressed dissatisfaction with a list of potential arbitrators (and a chairman) composed of a majority of ''lawyers specializing in injunctive relief.'' [35] They found this requirement unclear, too limiting and fraught with the potential for bias.[36] In response, NASD amended the proposal to provide that one less than a majority of the list of arbitrators be lawyers ''with experience litigating cases involving injunctive relief'' and that the chairman of the panel, if possible, also be a lawyer with ''experinece litigating cases involving injunctive relief.'' [37]

NASD also made the following changes to the procedure for selecting an arbitration panel: the Director shall send to the parties the employment history for the past 10 years and other background information for each listed arbitrator; the Director shall consolidate the parties' rankings; and shall appoint arbitrators based on the order of rankings on the consolidated list, subject to the arbitrators' availability and disqualification; and, in cases in which the panel consists of a majority of public arbitrators, the Director shall select a public arbitrator as chairperson.[38]

Applicable Legal Standard

The proposed rule change provides that the decision to grant or deny a request for permanent injunctive relief would be governed by an enforceable choice of law agreement between the parties, or, if there were no such agreement, then by the law of the state where the events upon which the request is based occurred. Some commenters argued that permitting an enforceable choice of law agreement between the parties to establish the

[28] *See* Sutro Letter and Campbell Letter, *supra* note 6.

[29] *See* Amendment No. 5, *supra* note 10.

[30] *See* Amendment No. 4, *supra* note 10.

[31] *See* Pescosolido Letter 2, *supra* note 9.

[32] *See* Sutro Letter, *supra* note 9.

[33] *See* Amendment No. 4, *supra* note 10.

[34] Telephone call between Florence Harmon, Senior Special Counsel, Division, Commission, and Laura Leedy Gansler, Counsel, NASD Dispute Resolution, on January 3, 2002. *See supra* note 15.

[35] *See* Sutro Letter, Campbell Letter, Pescosolido Letters, Jamieson Letter 3 and Jamieson Letter 4, *supra* notes 6, 9 and 12.

[36] *Id.*

[37] *See* Amendment No. 3, *supra* note 7 and Amendment No. 5, *supra* note 10.

[38] *See* Amendment No. 4 and Amendment No. 5, *supra* note 10.

governing law would be unfair to associated persons since firms draft these agreements in their own favor and force associated persons to sign them.[39] One commenter was also concerned that the absence of a uniform legal standard would yield wildly inconsistent results.[40] In response, NASD stated that this provision codifies the status quo, which is that enforceable choice of law agreements are applicable to requests for injunctive relief in arbitration and that this provision would not render any otherwise unenforceable choice-of-law provision or employment contract enforceable.[41]

Temporary Injunctive Order in Effect During Hearing

The proposed rule change provides that, in the event that a court-issued temporary injunctive order is still in effect, after a full and fair presentation of evidence from all relevant parties, an arbitration panel may prohibit the parties from seeking an extension of the pending court order, and, if appropriate, may order the parties to jointly move the court to modify or dissolve the pending order. In the event that a panel's order conflicts with a pending court order, the panel's order will become effective upon expiration of the pending court order.

Some commenters expressed concern that this process would keep the injunctive order in place longer than was fair and appropriate because arbitrators could not make decisions on injunctive issues until a full and fair hearing had occurred. Commenters argued that this could be an extended period of time because of the potential for a fifteen day delay before an arbitration hearing would be required to begin; the hearing would not be required to be expedited; the hearing would not be required to be held on consecutive days; and the temporary injunctive order could not be terminated until the parties petitioned the court after arbitration was complete.[42]

NASD responded that it does not believe that arbitration panels have the authority to dissolve, modify or supersede a court order; rather, arbitrators have the authority to order parties not to seek extensions of pending orders, or to jointly ask the court to modify or dissolve a pending order, if necessary. NASD does not believe arbitrators should exercise this authority until they have heard a full and fair presentation of the evidence regarding a request for permanent relief to ensure that arbitrators will be in a position to make an informed decision. In response to commenters' concerns about how long it would take arbitrators to reach a decision after a full and fair hearing, NASD stated that statistics on the average length of evidentiary hearings on requests for permanent injunctive relief suggest that, in most cases, arbitrators will be in a position to make that decision in a short period of time because the average duration of such hearings is 1.36 days, and almost 80% of all cases that go to a hearing are resolved after one day of hearings.[43] NASD also revised the proposal to expedite a hearing on permanent injunctive relief. Under the amended proposal, unless the parties agreement otherwise, a hearing lasting more than one day would be held on consecutive days when reasonably possible.[44] NASD also added language to make clear that arbitrators may make decisions on the issue of permanent injunctive relief and hold subsequent hearing sessions to decide other issues between the parties, including damages or other relief, to allow the parties time to gather or present additional evidence without delaying the termination of a temporary injunctive order.[45]

In response to a comment that judges often include language in their orders that transfer authority to arbitrators,[46] NASD further stated that the provision requiring arbitrators to have a full and fair hearing before ordering parties to petition the court for dismissal of a temporary injunctive order does not apply to court orders that expire by their own terms or otherwise contain provisions that confer authority on arbitrators to modify, amend, or dissolve the order.[47]

Fees

NASD originally proposed that the parties would jointly bear the travel-related costs and expenses of the arbitrators appointed to hear the request for permanent injunctive relief and prohibited arbitrators from reallocating arbitrator travel costs and expenses among the parties. Under the proposed rule change, notwithstanding any other provision of the Code, the chairperson of the panel hearing a request for permanent injunctive relief pursuant to this rule shall receive an honorarium of $375 for each single session, and $700 for each double session, of the hearing. Each other member of the panel shall receive an honorarium of $300 for each single session, and $600 for each double session, of the hearing. The proposal initially provided for the parties to share the difference between these amounts and the amounts panel members and the chairperson would otherwise receive under the Code and prohibited arbitrators from reallocating these amounts among the parties.[48]

The proposed rule change also provides that the party seeking injunctive relief shall pay the expedited hearing fees pursuant to Rule 10205(h), or, where both sides seek such relief, both parties shall pay such fees. In either event, the proposed rule specifically provides that the arbitrators shall have the authority to allocate such fees among the parties. The proposed rule would have no effect on the obligations of parties to pay, or on the authority of arbitrators to allocate, any other hearing fees required under the Code.

Several commenters argued that the provision prohibiting arbitrators from reallocating the travel-related costs and expenses of the arbitrators among the parties was unfair to associated persons.[49] In response, NASD amended the text of the proposed rule change to expressly permit arbitrators to reallocate the travel-related costs and expenses of arbitrators and the arbitrators' fees among the parties.[50] NASD also clarified that the parties were responsible for the ''reasonable'' travel-related costs and expenses incurred by arbitrators who are required to travel to a hearing location other than their primary hearing location or locations.[51]

Development of Proposal

Several commenters stated that the subcommittee that worked on the proposal consisted only of representatives from retail firms, and did not include representatives from associated persons and the investing

[39] *See* Foxman Letter, Sutro Letter, Jamieson Letter 2 and Jamieson Letter 3, *supra* notes 6, 9 and 12.

[40] *See* Sutro Letter, *supra* note 6.

[41] *See* Amendment No. 3, *supra* note 7.

[42] *See* Foxman Letter, Sutro Letter, Pescosolido Letters, Jamieson Letters, and Campbell Letter, *supra* notes 6, 9 and 12.

[43] *See* Amendment No. 3, *supra* note 7. One commenter responded that these statistics were inaccurate. This commenter, however, conceded that if hearings took place within 15 days following an injunction on consecutive days his concerns would not be as critical. *See* Pescosolido Letter 2, *supra* note 9.

[44] *See* Amendment No. 4 *supra* note 10.

[45] *See* Amendment No. 4, *supra* note 10.

[46] *See* Pescosolido Letter 2, *supra* note 9.

[47] *See* Amendment No. 4, *supra* note 10.

[48] NASD proposes that the payment of ordinary honoraria, as provided in NASD IM–10104 of the Code, shall not be affected by this provision.

[49] *See* James Letters, Sutro Letter, Pescosolido Letter, and Campbell Letter, *supra* notes 6, 9 and 12.

[50] *See* Amendment No. 3 and Amendment No. 4, *supra* note 7 and note 10.

[51] *See* Amendment No. 4, *supra* note 10.

public.[52] In response, NASD stated that it believed that interests of all relevant parties, including member firms, associated persons and the investing public were represented during the process. The committee included member firms with interests on both sides of raiding cases. NASD believes that views of associated persons and the investing public were represented by these firms. In addition, the proposal was reviewed and approved by the full National Arbitration and Mediation Committee, which consists of a majority of public members, as well as the Board of Directors of NASD Dispute Resolution. NASD believes that ''advocates of the interests of associated persons, as well as investors, have had ample opportunity to express opinions about the proposed rule change at all levels of review, and changes have been made throughout the process to address the interests of both constituencies''.[53]

III. Discussion

After careful review, the Commission finds, for the reasons discussed below, that the proposed rule change, as amended, is consistent with the Exchange Act and the rules and regulations thereunder applicable to the NASD. Specifically, the Commission finds the proposed rule change, as amended, is consistent with sections 15A(b)(5), 15A(b)(6) and 15A(b)(9) of the Exchange Act.[54]

NASD Rule 10335 was initially adopted as a pilot program in order to give NASD the opportunity to assess the rule's effectiveness.[55] NASD represents, based on its experience with Rule 10335, that the current rule is confusing and unnecessarily complex. NASD represents that the proposed rule change is the result of lengthy deliberation and careful compromise by the Injunctive Relief Rule Subcommittee of the National Arbitration and Mediation Committee (''NAMC''). Before the proposal was filed with the Commission, it was approved by the National Arbitration and Mediation Committee, which consisted of a majority of public members, as well as the board of NASD Regulation. The proposal was published for comment on two separate occasions, after Amendment No. 2 and Amendment No. 5 were filed, respectively. The Commission received 16 comment letters. The NASD incorporated many of the commenters' suggestions in the proposal, as amended.

In approving this proposal, the Commission does not address the merit of injunctive relief in the context of NASD Rule 10335. In large part, NASD Rule 10335 is a procedural rule that establishes the process for seeking temporary injunctive relief. The Commission notes that NASD Dispute Resolution has recently provided interpretive guidance to NASD Rule 2110 designed to protect investors by prohibiting members from interfering with a customer's request to transfer his or her account in connection with the change in employment of the customer's registered representative.[56]

Further, the Commission notes that the proposal, as amended, contains provisions that address the commenters' concerns pertaining to associated persons and public investors. A party seeking temporary injunctive relief is required to file its permanent claim at the same time it files its temporary claim and must simultaneously serve such claim on all parties by facsimile, overnight delivery or messenger. To keep the arbitration process as short as possible, once temporary injunctive relief has been granted, an arbitration hearing on permanent injunctive and all other relief must begin within 15 calendar days, must be held on consecutive days when reasonably possible, and arbitrators may hold separate subsequent hearings to decide other issues in order to expedite the ''full and fair'' hearing on permanent injunctive relief.

To address commenters' concerns regarding the composition of the arbitration panel, NASD made a number of changes to the proposal. In particular, a portion, but not a majority, of the list of potential arbitrators will be required to be lawyers with experience litigating cases involving injunctive relief. Further, the parties will be provided with a 10-year employment history for each potential arbitrator and the arbitrators will be selected based on the consolidated rankings of the parties. In addition, NASD modified the proposal to address certain commenters' concerns about fees. Specifically, the arbitrators now have the discretion to reallocate the reasonable travel-related costs and expenses incurred by the arbitrators and the arbitrators' fees among the parties.[57]

IV. Commission Findings and Order Granting Approval of the Proposed Rule Change

After careful consideration, the Commission finds that the proposed rule change, as amended, is consistent with the provisions of section 15A of the Exchange Act and the rules and regulations thereunder that govern NASD.[58] In particular, the Commission finds that the proposal is consistent with section 15A(b)(6) of the Exchange Act[59] because the proposal establishes procedures that allow for the quick resolution of disputes involving injunctive relief, provides a process for selecting a balanced arbitration panel, and improves procedural notice and service of injunctive relief claims. The Commission also finds that the proposed rule change, as amended, is consistent with the provisions of sections 15A(b)(5) of the Exchange Act[60] because the rule change provides that the parties are responsible for the ''reasonable'' travel-related costs and expenses of the arbitrators, and permits the arbitrators to use their discretion to reallocate costs and fees among the parties.

In reviewing this proposal, the Commission is required to consider whether the proposal will promote competition, efficiency and capital formation.[61] In this regard, the proposal provides a process that should help expedite and streamline the process for obtaining injunctive relief and deciding cases on the merits where injunctive relief is ordered. Further, the Commission does not believe that this procedural process, which does not address employment contracts, should

[52] *See* Foxman Letter, Campbell Letter, Pescosolido Letter, and Jamieson Letters, *supra* note 6.

[53] *See* Amendment No. 3, *supra* note 7.

[54] 15 U.S.C. 78*o*–3(b)(5), 15 U.S.C. 78*o*–3(b)(6) and 15 U.S.C. 78*o*–3(b)(9).

[55] *See* Securities Exchange Act Release No. 36145 (August 23, 1995), 60 FR 45200 (August 30, 1995); Securities Exchange Act Release No. 38069 (December 20, 1996), 61 FR 68806 (December 30 1996); Securities Exchange Act Release No. 39458 (December 17, 1997), 62 FR 67423 (December 24, 1997), Securities Exchange Act Release No. 40124 (June 24, 1998), 63 FR 36282 (July 2, 1998); Securities Exchange Act Release No. 40846 (December 28, 1998), 64 FR 548 (January 5, 1999); Securities Exchange Act Release No. 41532 (June 16, 1999), 64 FR 33335 (June 22, 1999); Securities Exchange Act Release No. 42280 (December 28, 1999), 65 FR 1211 (January 7, 2000) and Securities Exchange Act Release No. 43813 (January 5, 2001), 66 FR 2629 (January 16, 2001).

[56] *See* note 26, *supra.*

[57] Jamieson Letter 4 argued that in the context of arbitration, cost-splitting is illegal even if the arbitrators are permitted to reallocate costs based on a recent California Supreme court decision. *Armendariz* v. *Foundation Health Psychcare Services, Inc.,* 6 P.3d 669 (2000). This court decision is not relevant to NASD 00–02 because the court's decision was directed to the validity of a predispute arbitration agreement involving certain employment matters, not the validity of the arbitration forum's fees (or the arbitration forum's procedural rules). In California, NASD–DR has limited the arbitration fees for employees in applicable cases involving employment disputes pursuant to this court decision, including those filed under the procedural injunctive relief rule. *See* note 12, *supra.*

[58] 15 U.S.C. 78*o*–3.

[59] 15 U.S.C. 78*o*–3(b)(6).

[60] 15 U.S.C. 78*o*–3(b)(5).

[61] 15 U.S.C. 78c(f).

result in any burden on competition not necessary or appropriate in furtherance of the Exchange Act. Therefore, the Commission finds that the proposal is consistent with section 15A(b)(9) of the Exchange Act.[62]

It Is Therefore Ordered, pursuant to section 19(b)(2) of the Act[63] that the proposed rule change (SR–NASD–00–02), as amended, be, and hereby is, approved.

For the Commission, by the Division of Market Regulation, pursuant to delegated authority.[64]

Margaret H. McFarland,

Deputy Secretary.

[FR Doc. 02–1105 Filed 1–15–02; 8:45 am]

BILLING CODE 8010–01–M

[62] 15 U.S.C. 78*o*–3(b)(9).

[63] 15 U.S.C. 78s(b)(2).

[64] 17 CFR 200.30–3(a)(12).

SECURITIES AND EXCHANGE COMMISSION

[Release No. 34–45258; File No. SR–NYSE–2002–02]

Self-Regulatory Organizations; Notice of Filing and Immediate Effectiveness of Proposed Rule Change by the New York Stock Exchange, Inc. Regarding Fees for Mandatory Participation in the Floor Member Continuing Education Program

January 9, 2002.

Pursuant to section 19(b)(1) of the Securities Exchange Act of 1934 (''Act''),[1] and Rule 19b–4 thereunder,[2] notice is hereby given that on January 4, 2002, the New York Stock Exchange, Inc. (''NYSE'' or ''Exchange'') filed with the Securities and Exchange Commission (''Commission'') the proposed rule change as described in Items I, II and III below, which Items have been prepared by the Exchange. The Commission is publishing this notice to solicit comments on the proposed rule change from interested persons.

I. Self-Regulatory Organization's Statement of the Terms of Substance of the Proposed Rule Change

The Exchange proposes to establish fees as of January 14, 2002 to be charged to members that are active on the floor of the Exchange who are required under NYSE Rule 103A (Specialist Stock Reallocation and Member Education and Performance) to participate in the Exchange's Floor Member Continuing Education Program on a semi-annual basis. The text of the proposed rule change is available at the NYSE and at the Commission.

II. Self-Regulatory Organization's Statement of the Purpose of, and Statutory Basis for, the Proposed Rule Change

In its filing with the Commission, the NYSE included statements concerning the purpose of and basis for its proposal and discussed any comments it received regarding the proposal. The text of these statements may be examined at the places specified in Item IV below. The Exchange has prepared summaries, set forth in sections A, B and C below, of the most significant aspects of such statements.

A. Self-Regulatory Organization's Statement of the Purpose of, and Statutory Basis for, the Proposed Rule Change

1. Purpose

NYSE Rule 103A requires members active on the floor of the Exchange to participate in the Exchange's Floor Member Continuing Education Program on a semi-annual basis and at such other times as may be necessary in connection with any particular matter or matters. Any floor member who fails to complete an educational program as scheduled must attend a make-up program no later than 120 days from the date of the originally scheduled program. Failure to do so will result in the member being precluded from entering on the floor until such time as the member satisfies the requirement to participate in the program.

A new interactive computer-based education program has been developed that will be implemented during January 2002. Participants will be required to be trained on market activities such as Opening, Intra-Day and the Closing. Specific categories include, but are not limited to: foreign stocks and parity, the opening of a volatile stock, NYSE Rule 127 (Block Positioning) and NYSE Rule 726 (Delivery of Options Disclosure Document and Prospectus) trades, CAP orders, error accounts, crossing sessions, MOC/LOC orders and informational imbalances. An industry committee has also been formed to guide the development of the content. Participation will continue to be required on a semi-annual basis, and a $100 registration fee will be charged for each session.

If a registrant fails to keep the scheduled appointment or does not complete the session, the registrant will be charged an additional $100 to re-register for another session.

The proposed fees are intended to help offset the costs of developing the program and infrastructure, administration, and ongoing development and maintenance.

2. Statutory Basis

The Exchange believes that the proposed rule is consistent with the provisions of section 6(b)(4) of the Act,[3] in that it provides for the equitable allocation of reasonable dues, fees and other charges among members, issuers and other persons using its services.

B. Self-Regulatory Organization's Statement on Burden on Competition

The Exchange does not believe that the proposed rule change will impose any burden on competition that is not necessary or appropriate in furtherance of the purposes of the Act.

C. Self-Regulatory Organization's Statement on Comments on the Proposed Rule Change Received From Members, Participants or Others

Comments were neither solicited nor received.

III. Date of Effectiveness of the Proposed Rule Change and Timing for Commission Action

The proposed rule change has become effective pursuant to Section 19(b)(3)(A)(ii) of the Act[4] and subparagraph (f)(2) of Rule 19b–4 thereunder,[5] because it involves a due, fee, or other charge. At any time within 60 days of the filing of the proposed rule change, the Commission may summarily abrogate such rule change if it appears to the Commission that such action is necessary or appropriate in the public interest, for the protection of investors, or otherwise in furtherance of the purposes of the Act.

VI. Solicitation of Comments

Interested persons are invited to submit written data, views, and arguments concerning the foregoing, including whether the proposal is consistent with the Act. Persons making written submissions should file six copies thereof with the Secretary, Securities and Exchange Commission, 450 Fifth Street, NW., Washington, DC 20549–0609. Copies of the submission, all subsequent amendments, all written statements with respect to the proposed rule change that are filed with the Commission, and all written communications relating to the proposed rule change between the Commission and any person, other than those that may be withheld from the public in accordance with the

[1] 15 U.S.C. 78s(b)(1).

[2] 17 CFR 240.19b–4.

[3] 15 U.S.C. 78f(b)(4).

[4] 15 U.S.C. 78s(b)(3)(A)(ii).

[5] 17 CFR 240.19b–4(f)(2).

provisions of 5 U.S.C. 552, will be available for inspection and copying in the Commission's Public Reference Room. Copies of such filing will also be available for inspection and copying at the principal office of the NYSE. All submissions should refer to file number SR–NYSE–2002–02 and should be submitted by February 6, 2002.

For the Commission, by the Division of Market Regulation, pursuant to delegated authority.[6]

Margaret H. McFarland,

Deputy Secretary.

[FR Doc. 02–1100 Filed 1–15–02; 8:45 am]

BILLING CODE 8010–01–M

SECURITIES AND EXCHANGE COMMISSION

[Release No. 34–45263; File No. SR–NYSE–2001–53]

Self-Regulatory Organizations; Notice of Filing of Proposed Rule Change and Amendment No. 1 Thereto by the New Stock Exchange, Inc. Amending Its Rules Regarding the Transmission of Proxy and Other Shareholder Communication Material and the Proxy Reimbursement Guidelines Set Forth In Those Rules, and Requesting Permanent Approval of the Amended Proxy Reimbursement Guidelines

January 9, 2002.

Pursuant to section 19(b)(1) of the Securities Exchange Act of 1934 (''Act'')[1] and Rule 19b–4 thereunder,[2] notice is hereby given that on December 21, 2001, the New York Stock Exchange, Inc. (''NYSE'' or ''Exchange'') filed with the Securities and Exchange Commission (''Commission'') the proposed rule change as described in Items I, II, and III below, which Items have been prepared by the Exchange. On January 9, 2002, the NYSE filed Amendment No. 1 to the proposed rule change.[3] The Commission is publishing this notice to solicit comments on the proposed rule change, as amended, from interested persons.

I. Self-Regulatory Organization's Statement of the Terms of Substance of the Proposed Rule Change

Subject to the guideline amendments noted below, the Exchange seeks permanent approval of the pilot program setting forth guidelines for the amounts that NYSE issuers should reimburse member organizations for the distribution of proxy materials and other issuer communications to security holders whose securities are held in street name. In addition, the Exchange proposes to amend the guidelines under the current pilot program by decreasing the basic mailing fee paid by ''Large Issuers'' (as defined below) by 5¢ (from 50¢ to 45¢) and by cutting in half the incentive fee payable by Large Issuers (from 50¢ to 25¢).

The text of the proposed rule change, as amended, is available upon request from the Office of the Secretary, the NYSE or the Commission.

II. Self-Regulatory Organization's Statement of the Purpose of, and Statutory Basis for, the Proposed Rule Change

In its filing with the Commission, the Exchange included statements concerning the purpose of and basis for the proposed rule change and discussed any comments it received on the proposed rule change. The text of these statements may be examined at the places specified in Item IV below. The Exchange has prepared summaries, set forth in sections A, B, and C below, of the most significant aspects of such statements.

A. Self-Regulatory Organization's Statement of the Purpose of, and Statutory Basis for, the Proposed Rule Change

1. Purpose

Exchange Rule 451 (''Transmission of Proxy Material'') and Exchange Rule 465 (''Transmission of Interim Reports and Other Material'') (collectively, the ''Rules'') currently provide for a pilot program pursuant to which the NYSE has established fee reimbursement guidelines (the ''Pilot Program''). Under the Pilot Program, the NYSE has established guidelines for the amounts that NYSE issuers should reimburse member organizations for the distribution of proxy materials and other issuer communications to security holders whose securities are held in street name (the ''Guidelines''). In this proposed rule change, as amended, the Exchange seeks permanent approval of the Pilot Program Guidelines. In addition, the Exchange proposes to amend certain reimbursement fees that the Guidelines establish. Those amendments seek to decrease the basic mailing fees paid by large issuers by 5¢ (from 50¢ to 45¢) and to cut in half (from 50¢ to 25¢) the incentive ''suppression'' fee that large issuers pay to member organizations that succeed in reducing the number of sets of materials that need to be distributed (such as by sending one set of materials to a household holding multiple positions in the issuer's securities).

A. Permanent Approval

Supplementary Material .90 (''Schedule of approved charges by member organizations in connection with proxy solicitations'') to Exchange Rule 451 applies the Guidelines to the transmission of proxy materials to shareholders. Supplementary material .20 (''Mailing charges by member organizations'') to Exchange Rule 465 applies them to the transmission of other materials to shareholders. In addition, Paragraph 402.10(A) of the NYSE's *Listed Company Manual* (''Charges for Initial Proxy and/or Annual Report Mailings'') includes the text of Supplementary Material .90 to Exchange Rule 451 and the Exchange proposes to conform Paragraph 402.10(A) to conform to the changes described below to Exchange Rule 451. The Commission initially approved the Pilot Program on March 14, 1997.[4] Pursuant to Commission extensions of its initial approval, the Pilot Program has remained in effect since then. Pursuant to the Commission's most recent extension, the Pilot Program is currently scheduled to expire on April 1, 2002.[5]

During this period, the NYSE has participated on the Proxy Voting Review Committee (the ''Committee''). The Committee is a private initiative that is designed to review the proxy process. It includes self-regulatory organizations and representatives of the securities industry, corporate issuers and institutional investors, as well as the largest provider of proxy intermediary services. The Committee has monitored the effects of the Guidelines on the market and has maintained an on-going dialogue among Committee representatives. In addition, the Exchange has had an independent accounting firm audit the Pilot Program.[6]

The Committee's experience with the Pilot Program has convinced it that the Guidelines have been instrumental in setting at fair and reasonable levels the costs that issuers incur in having member organizations and

---

[6] 17 CFR 200.30–3(a)(12).

[1] 15 U.S.C. 78s(b)(1).

[2] 17 CFR 240.19b–4.

[3] *See* letter from Darla C. Stuckey, Corporate, NYSE, to Sharon Lawson, Senior Special Counsel, Division of Market Regulation, Commission, dated January 7, 2002 (''Amendment No. 1''). In Amendment No. 1, the Exchange made some technical and clarifying corrections to the proposed rule change.

[4] *See* Securities Exchange Act Release No. 38406 (March 14, 1997), 62 FR 13922 (March 24, 1997) (File No. SR–NYSE–96–36).

[5] *See* Securities Exchange Act Release No. 44750 (August 29, 2001), 66 FR 46488 (September 5, 2001) (File No. SR–NYSE–2001–22).

[6] *See* Amendment No. 1, *supra* note 3.

intermediaries transmit proxy and other materials to security holders. For that reason, the Committee unanimously voted (with one abstention) to recommend that the NYSE seek permanent approval of the Guidelines, as modified by this proposed rule change, as amended, and the Exchange has determined that it is appropriate to do so.

B. Guideline Changes

In addition to seeking permanent approval of the Guidelines, the Committee has recommended certain amendments to the Guidelines. The Exchange supports those amendments, proposes to adopt them into its Rules and supports the Committee's rationale for the amendments, as set forth below. The proposed amendments are as follows:

(i) Reduce the suggested rate of reimbursement for initial mailings of each set of material (*i.e.,* proxy statement, form of proxy and annual report when mailed as a unit) from 50¢ to 40¢.

(ii) Increase the suggested per-nominee fee for intermediaries that coordinate the proxy and mailing activities of multiple nominees. That suggested fee is currently $20 per nominee. The increase would raise it (A) 10¢ per set of material required for ''Small Issuers'' (defined as issuers whose shares are held in fewer than 200,000 nominee accounts), or (B) 5¢ per set of material required for ''Large Issuers'' (defined as issuers whose shares are held in at least 200,000 nominee accounts).

(iii) Reduce from 50¢ to 25¢ the incentive fee for initial mailings of the materials of Large Issuers (again, issuers whose shares are held in at least 200,000 nominee accounts). As a result, the incentive fee for Large Issuers will decrease by 25¢ and the incentive fee for Small Issuers will remain at 50¢.

The Committee and the Exchange represent that the net effect of clauses (i) and (ii) is to decrease the effective mailing fee by 5¢ for Large Issuers, but not for Small Issuers. One intermediary projects that the combination of that decrease and the decrease in the incentive fee for Large Issuers will decrease the total fees that issuers pay to have materials distributed to shareholders by almost $11 million.[7]

The Guidelines currently subject Small Issuers and Large Issuers to the same rates. The Committee has designed the proposed revamped fee schedule to allocate more fairly the costs of distributing proxy and other material between Large Issuers and Small Issuers. The Committee recognizes that economies of scale create overall per-account cost savings for Large Issuers and that those savings justify lower fees for Large Issuers. The Committee determined that reducing the rates applicable to Large Issuers relative to the rates applicable to Small Issuers is fair, reasonable and appropriate.[8]

The Committee recognizes that a member organization typically spends less in transmitting material to the nominee account of a Large Issuer than in transmitting material to the nominee account of a Small Issuer. That is because economies of scale apply to many of the tasks of processing material for distribution and of collecting voting instructions. For instance, processing search dates and record dates, logging receipt of materials, coding proxies, reporting voting results and invoicing fees payable involve costs that are essentially fixed. As a result, the per-account cost for these tasks decreases in relation to the number of accounts in which the issuer's shares are held. That per-account cost is therefore lower with respect to a Large Issuer than with respect to a Small Issuer.

In addition, modern data processing and mailing techniques reduce the amount of human intervention involved in the process, driving down the actual per-account cost of handling mailings in large volume. The Committee believes that the actual cost incurred with respect to Large Issuers in handling mailings is lower than the reimbursable amount that results from adherence to the current Guidelines. On the other hand, the actual cost of handling mailings for Small Issuers far exceeds the fees set forth in the current guidelines.[9] The Committee believes that these factors justify reducing the incentive fee from 50¢ to 25¢ for Large Issuers, but not reducing the 50¢ fee for Small Issuers. They also justify the 5¢ difference in the per-set-of-material per-nominee fee for Large Issuers and Small Issuers.

In applying the proposed revamped fee schedules to the Guidelines, the Committee has had to establish a line of demarcation that separates Large Issuers from Small Issuers. It settled on requiring an issuer to have 200,000 nominee accounts in order to qualify as a Large Issuer. As a result, only the largest issuers, fewer than 200 overall, fall within that definition. However, beneficial owners' positions in shares of those Large Issuers account for approximately 50 percent of the number of positions that all beneficial owners maintain in the shares of all issuers. The Exchange has adopted the Committee's recommendations discussed above, including the recommendation that the 50 percent mark is an appropriate place at which to draw the line. The Exchange, in this proposed rule change, as amended, proposes to incorporate the Committee's recommendations into its Guidelines and Rules.

2. Statutory Basis

The Exchange believes the proposed rule change, as amended, is consistent with section 6(b) of the Act,[10] in general, and furthers the objectives of sections 6(b)(4)[11] and 6(b)(5)[12] of the Act, in particular. Section 6(b)(4) of the Act[13] provides that an exchange have rules that provide for the equitable allocation of reasonable dues, fees and other charges among its members and other persons using its facilities. Section 6(b)(5) of the Act[14] provides that an exchange have rules to prevent fraudulent and manipulative acts and practices, to promote just and equitable principles of trade, to foster cooperation and coordination with persons engaged in regulating, clearing, settling, processing information with respect to, and facilitating transactions in securities, to remove impediments to and perfect the mechanism of a free and open market and a national market system, and, in general, to protect investors and the public interest.

B. Self-Regulatory Organization's Statement on Burden on Competition

The Exchange believes that the proposed rule change does not impose any burden on competition that is not necessary or appropriate in the furtherance of the purposes of the Act.

[7] *See* letter to Richard A. Grasso, Chairman and Chief Executive Officer, NYSE, from Stephen P. Norman, Chairman, Committee, dated November 28, 2001 (the ''Committee Letter''). A copy of the Committee Letter is attached as Exhibit C to the Exchange's proposed rule change.

[8] The Committee voiced its support for the proposed fee changes in the Committee Letter. *See* Exhibit C to the Exchange's proposed rule change.

[9] Even taking into consideration increased costs associated with institutional shareholder requirements and peak season processing, both of which are associated more with Large Issuers than Small Issuers, the Committee nonetheless found that handling costs for Large Issuers are lower than for Small Issuers, due primarily to economies of scale.

The largest provider of proxy intermediary services presented information to the Committee that detailed the costs that issuers pay for registered proxy processing. That information indicated that the per-unit costs that Small Issuers pay are, on average, more than 10 times greater than the per-unit costs that Large Issuers pay.

[10] 15 U.S.C. 78f(b).

[11] 15 U.S.C. 78f(b)(4).

[12] 15 U.S.C. 78f(b)(5).

[13] 15 U.S.C. 78f(b)(4).

[14] 15 U.S.C. 78f(b)(5).

C. Self-Regulatory Organization's Statement on Comments on the Proposed Rule Change Received From Members, participants or Others

The NYSE has engaged in on-going dialogue regarding the proposed rule change and other aspects of the Pilot Program with Commission staff, as well as with the Committee. The proposed fee changes were developed and approved by the Committee. In the Committee Letter, the Committee asserts that the proposed fees appear reasonable in light of the service levels required and the overall costs associated with the elimination of duplicate mailings, that the proposed fees reflect the economies of scale of the Large Issuers and that the Guidelines should be made permanent.

In addition, the NYSE has received other comment letters on the proposed fee changes from the Securities Industry Association (''SIA''), the American Society of Corporate Secretaries (''ASCS'') and the Association of Publicly Traded Companies (''APTC'').[15] SIA, ASCS and APTC all endorse the proposed fee changes. APTC notes in its letter that the Pilot Program provided a $235 million reduction in costs in 2001 from mail suppressions and is projected to provide savings of more than twice that amount by 2005. APTC also posits that the large volumes and low incremental cost of transmitting proxy materials for Large Issuers justify their payment of lower rates than Small Issuers.

Several of the Commission releases approving changes to the Pilot Program included language encouraging interested parties to consider approaches that would foster competition in the proxy distribution service industry. The releases also suggested that market forces, rather than regulators, should determine reasonable rates for proxy distribution services.

The Exchange views the Guideline-setting process as an on-going matter. Even if the Commission grants permanent status to the Guidelines, the Exchange intends to continue to meet with the Committee to evaluate and tune the Guidelines and to consider possible approaches to broader reform of the proxy distribution system.

[15] *See* letter to Richard A. Grasso, Chairman and Chief Executive Officer, NYSE, from Donald D. Kittell, Executive Vice President, SIA, dated November 29, 2001 (the ''SIA Letter''); letter to James E. Buck, Senior Vice President and Secretary, NYSE, from Brian T. Borders, President, APTC, dated November 29, 2001 (the ''APTC Letter''). Those letters are included in Exhibit D to the Exchange's proposed rule change.

III. Date of Effectiveness of the Proposed Rule Change and Timing for Commission Action

Within 35 days of the date of publication of this notice in the **Federal Register** or within such longer period (i) as the Commission may designate up to 90 days of such date if it finds such longer period to be appropriate and publishes its reasons for so finding or (ii) as to which the Exchange consents, the Commission will:

(A) By order approve such proposed rule change, or

(B) institute proceedings to determine whether the proposed rule change should be disapproved.

IV. Solicitation of Comments

Interested persons are invited to submit written data, views and arguments concerning the foregoing, including whether the proposed rule change, as amended, is consistent with the Act. Persons making written submissions should file six copies thereof with the Secretary, Securities and Exchange Commission, 450 Fifth Street, NW., Washington, DC 20549–0609. Copies of the submission, all subsequent amendments, all written statements with respect to the proposed rule change that are filed with the Commission, and all written communications relating to the proposed rule change between the Commission and any person, other than those that may be withheld from the public in accordance with the provisions of 5 U.S.C. 552, will be available for inspection and copying in the Commission's Public Reference Room. Copies of such filing will also be available for inspection and copying at the principal office of the NYSE. All submissions should refer to File No. SR–NYSE–2001–53 and should be submitted by February 6, 2002.

For the Commission by the Division of Market Regulation, pursuant to delegated authority.[16]

Margaret H. McFarland,

Deputy Secretary.

[FR Doc. 02–1104 Filed 1–15–02; 8:45 am]

BILLING CODE 8010–01–M

[16] 17 CFR 200.30–2(a)(12).

SECURITIES AND EXCHANGE COMMISSION

[Release No. 34–45262; File No. SR–PCX–2001–47]

Self-Regulatory Organizations; Notice of Filing and Immediate Effectiveness of Proposed Rule Change, Amendment No. 1, and Amendment No. 2 Thereto by the Pacific Exchange, Inc. Establishing a New Exchange Fee Based on the Number of Order Cancellation Routed Through the Exchange's Member Firm Interface

January 9, 2002.

Pursuant to section 19(b)(1) of the Securities Exchange Act of 1934 (''Act'')[1] and Rule 19b–4[2] thereunder, notice is hereby given that on November 27, 2001, the Pacific Exchange, Inc. (''PCX'' or ''Exchange'') filed with the Securities and Exchange Commission (''SEC'' or ''Commission'') the proposed rule change as described in Items I, II, and III below, which Items have been prepared by the Exchange. On December 13, 2001, the PCX submitted Amendment No. 1 to the proposed rule change.[3] On December 26, 2001, the PCX submitted Amendment No. 2 to the proposed rule change.[4] The Commission is publishing this notice to solicit comments on the proposed rule change, as amended, from interested persons.

I. Self-Regulatory Organization's Statement of the Terms of Substance of the Proposed Rule Change

The PCX proposes to establish a new fee based upon the number of order cancellations that are routed through the MFI.

The text of the proposed rule change, as amended, is available at the Office of

[1] 15 U.S.C. 78s(b)(1).

[2] 17 CFR 240.19b–4.

[3] *See* letter from Cindy L. Sink, Senior Attorney, PCX, to Nancy J. Sanow, Assistant Director, Division of Market Regulation (''Division''), Commission, dated December 12, 2001 (''Amendment No. 1''). In Amendment No. 1, the PCX amended note 2 to the PCX Fee Schedule entitled ''Options: Trade-Related Charges'' to clarify that the fee will be assessed when the total number of orders an executing clearing member cancels through the PCX Member Firm Interface (''MFI'') in a particular month exceeds the total number of orders that member executes through the MFI in that same month.

[4] *See* letter from Cindy L. Sink, Senior Attorney, PCX, to Nancy J. Sanow, Assistant Director, Division, Commission, dated December 21, 2001 (''Amendment No. 2''). In Amendment No. 2, the PCX clarified the purpose of the proposed rule change. For purposes of calculating the 60-day period, within which the Commission may summarily abrogate the proposed rule change under section 19(b)(3)(C) of the Act, the Commission considers that period to commence on December 26, 2001, the date the PCX filed Amendment No. 2. *See* 15 U.S.C. 78s(b)(3)(C).

the Secretary, PCX and at the Commission.

II. Self-Regulatory Organization's Statement of the Purpose of, and Statutory Basis for, the Proposed Rule Change

In its filing with the Commission, the PCX included statements concerning the purpose of and basis for the proposed rule change, as amended, and discussed any comments it received on the proposed rule change. The text of these statements may be examined at the places specified in Item IV below. The Exchange has prepared summaries, set forth in sections A, B, and C below, of the most significant aspects of such statements.

A. Self-Regulatory Organization's Statement of the Purpose of, and Statutory Basis for, the Proposed Rule Change

1. Purpose

The Exchange is proposing to establish a fee to deal with various operational problems and costs resulting from the practice of immediately following orders routed through the Exchange's automated MFI with a cancel request. Since these orders frequently come in large numbers, components, of the MFI, such as the Floor Broker Hand Held Terminals (''HHTs''), can very quickly become backlogged, which increases Exchange costs and adversely impacts public customers, their clearing firms, and Lead Market Makers by making the execution of other customer orders less timely. A high volume of cancellations sent through the MFI to HHTs or to the Exchange's Limit Order Book also increases Exchange costs by requiring the Exchange to spend increased amounts on systems and other hardware to process increased order traffic flow.[5]

Under the proposed fee, the executing Clearing Member would be charged $1.00 for every order that it cancels through the MFI in any month where the total number of cancellations sent by the executing Clearing Member exceeds the total number of orders that same firm executed through the MFI in that same month. This fee will not apply to executing Clearing Members that cancel fewer than 500 orders through the MFI in a given month. The Exchange believes that the fee will help ease backlogs on the MFI and particularly HHTs.

[5] This sentence was clarified to reflect a telephone converation between Cindy L. Sink, Senior Attorney, PCX, and Gordon Fuller, Counsel to the Assistant Director and Frank N. Genco, Attorney, Division, Commission, (January 3, 2002).

2. Statutory Basis

The Exchange believes that the proposal is consistent with section 6(b) of the Act,[6] in general, and section 6(b)(4) of the Act,[7] in particular, in that it is designed to provide for the equitable allocation of reasonable dues, fees, and other charges among its members and issuers and other persons using its facilities.

B. Self-Regulatory Organization's Statement on Burden on Competition

The Exchange does not believe that the proposed rule change, as amended, will impose any burden on competition.

C. Self-Regulatory Organization's Statement on Comments on the Proposed Rule Change Received From Members, Participants, or Others

No written comments were solicited nor received.

III. Date of Effectiveness of the Proposed Rule Change and Timing for Commission Action

The foregoing proposed rule change, as amended, has become effective pursuant to section 19(b)(3)(A)(ii) of the Act[8] and subparagraph (f)(2) of Rule 19b–4[9] thereunder, because it establishes or changes a due, fee, or other charge.[10] At any time within 60 days of December 26, 2001, the Commission may summarily abrogate such proposed rule change, as amended, if it appears to the Commission that such action is necessary or appropriate in the public interest, for the protection of investors, or otherwise in furtherance of the purposes of the Act.[11]

IV. Solicitation of Comments

Interested persons are invited to submit written data, views, and arguments concerning the foregoing, including whether the proposed rule change, as amended, is consistent with the Act. Persons making written submissions should file six copies thereof with the Secretary, Securities and Exchange Commission, 450 Fifth Street, NW., Washington, DC 20549–0609. Copies of the submission, all subsequent amendments, all written statements with respect to the proposed rule change, as amended, that are filed with the Commission, and all written communications relating to the proposed rule change, as amended, between the Commission and any person, other than those that may be withheld from the public in accordance with the provisions of 5 U.S.C. 552, will be available for inspection and copying in the Commission's Public Reference Room. Copies of such filing will also be available for inspection and copying at the principal office of the PCX.

All submissions should refer to File No. SR–PCX–2001–47 and should be submitted by February 6, 2002.

For the Commission, by the Division of Market Regulation, pursuant to delegated authority.[12]

Margaret H. McFarland,

Deputy Secretary.

[FR Doc. 02–1101 Filed 1–15–02; 8:45 am]

BILLING CODE 8010–01–M

[6] 15 U.S.C. 78f(b).

[7] 15 U.S.C. 78f(b)(4).

[8] 15 U.S.C. 78s(b)(3)(A)(ii).

[9] 17 CFR 240.19b–4(f)(2).

[10] The Exchange's proposed rule change is substantially similar to a fee instituted by the Chicago Board Options Exchange, Inc., which became immediately effective on July 27, 2001, and a fee instituted by the American Stock Exchange LLC, which became immediately effective on November 27, 2001. *See* Securities Exchange Act Release Nos. 44607 (July 27, 2001), 66 FR 40757 (August 3, 2001), (Notice of Filing and Immediate Effectiveness, SR–CBOE–2001–40); and 45110 (November 27, 2001), 66 FR 63080 (December 4, 2001), (Notice of Filing and Immediate Effectiveness, SR–Amex–2001–90).

[11] *See* 15 U.S.C. 78(b)(3)(C).

[12] 17 CFR 200.30–3(a)(12).

SECURITIES AND EXCHANGE COMMISSION

[Release No. 34–45255; File No. SR–SCCP–00–01]

Self-Regulatory Organizations; Stock Clearing Corporation of Philadelphia; Order Approving a Proposed Rule Change Relating to the Eligibility of Holders of Equity Trading Permits Issued by the Philadelphia Stock Exchange, Inc. To Be Participants of the Stock Clearing Corporation of Philadelphia

January 9, 2002.

On January 12, 2000, the Stock Clearing Corporation of Philadelphia (''SCCP'') filed with the Securities and Exchange Commission (''Commission'') and on May 31, 2000, amended a proposed rule change (File No. SR–SCCP–00–01) pursuant to section 19(b)(1) of the Securities Exchange Act of 1934 (''Act'').[1] Notice of the proposal was published in the **Federal Register** on September 1, 2000.[2] No comment letters were received. For the reasons discussed below, the Commission is approving the proposed rule change.

I. Description

The rule change amends SCCP's rules to permit holders of Equity Trading Permits (''ETPs'') issued by the

[1] 15 U.S.C. 78s(b)(1).

[2] Securities Exchange Act Release No. 43210 (August 25, 2000), 64 FR 53259.

Philadelphia Stock Exchange, Inc. (''PHLX'') to be eligible to become SCCP participants. SCCP Rule 3 provides that, subject to certain conditions,[3] any person who is a broker-dealer registered under the Act and a member in good standing of PHLX is eligible to be a SCCP participant.[4] The rule change amends SCCP Rule 3 to permit holders of PHLX ETPs to be considered ''members'' of PHLX for purposes of SCCP's participant qualification requirements.[5] ETP holders would thus be eligible to apply to be participants in SCCP.

The rule change also makes a corresponding amendment to Article 2 of SCCP's Articles of Incorporation. Article 2 currently includes as one of SCCP's corporate purpose the carrying of securities ''for members, member firms and/or member corporation of the Philadelphia Stock Exchange. * * *'' The rule change amends Article 2 to add a statement that SCCP's Board of Directors may determine by rule the identity of PHLX ''members, member firms and/or member corporations.''

II. Discussion

PHLX has proposed the creation of ETPs in order to reduce the cost of access to the exchange's equity trading floor as well as to provide an opportunity to attract additional order flow and new business and services. All trades on the PHLX in equity securities are processed through SCCP and require a SCCP participant to be involved. ETP holders will not be required to be SCCP participants themselves. Like PHLX members, ETP holders may elect instead to enter into a correspondent arrangement with another SCCP participant whereby the SCCP participant assumes responsibility for the clearance and settlement of the ETP holder's trades. The herein approved amendments to SCCP Rule 3 and SCCP's Articles of Incorporation simply assure that those ETP holders wishing to become SCCP participants themselves will be treated by SCCP in he same fashion as SCCP participants who are PHLX members. In doing so, the amendments also provide a clear basis upon which the SCCP board of directors can determine by rule, as and when future circumstances may warrant, the identity of such ''members, member firms and/or member corporations.''

Section 17A(b)(3)(F) of the Act requires that the rules of a clearing agency be designed to promote the prompt and accurate clearance and settlement of securities transactions.[6] The Commission believes that the approval of SCCP's Rule 3 change and Article 2 amendment is consistent with this section because these changes allow holders of ETPs issued by the PHLX to be eligible to become SCCP participants just as PHLX members are. As a result, more broker-dealers will have access to and be able to utilize SCCP.

III. Conclusion

On the basis of the foregoing, the Commission finds that the proposal is consistent with the requirements of the Act and in particular with the requirements of section 17A of the Act and the rules and regulations thereunder.

It Is Therefore Ordered, pursuant to section 19(b)(2) of the Act, that the proposed rule change (File No. SR–SCCP–00–01) be and hereby is approved.[7]

For the Commission, by the Division of Market Regulation, pursuant to the delegated authority.

Margaret H. McFarland,

Deputy Secretary.

[FR Doc. 02–1102 Filed 1–15–02; 8:45 am]

BILLING CODE 8010–01–M

[3] SCCP approves applicants for participant status only upon a determination that the applicant meets certain standards of financial condition, operational capability, and character set forth in SCCP's rules. Each participant is required to make a contribution to the SCCP Participant's Fund and to comply with SCCP's By-laws and Rules as well as with a participant's agreement. ETP holders must apply for SCCP membership and will be subject to the same admission criteria as PHLX members.

[4] The Commission has approved two rule changes proposed by PHLX. PHLX 00–02 adds new Article Twenty-First to PHLX's Certificate of Incorporation which enables PHLX to issue ETPs. PHLX 00–03 implements PHLX Rule 23 which sets forth the terms and conditions of the ETPs. Under PHLX Rule 23, holders of ETPs generally have the same rights under PHLX rules as PHLX members without options privileges except that ETP holders do not have the right to vote. ETPs are not transferable and their holders are not entitled to any residual interest in PHLX assets upon a liquidation of PHLX. Holders of ETPs are generally subject to the same obligations as PHLX members, except with respect to certain fees. Securities Exchange Act Release No. 45254 (January 9, 2002).

[5] The amendment to SCCP Rule 3 states, ''For purposes of this Rule 3 as well as all provisions of the Corporation's Certificate of Incorporation, By-laws, rules, regulations, requirements, orders, directions and decisions adopted or made in accordance therewith, holders of Equity Trading Permits (''ETPs'') issued pursuant to PHLX Rule 23 shall be deemed to be members of PHLX, and holders of Regular ETPs issued pursuant to PHLX Rule 23 who transact business from a location on the PHLX's equity floor shall be deemed to be PHLX floor members.'' Off-Floor ETPs, the other class of ETPs, allows holders electronic and telephone access, but not physical access, to the Exchange floor. Accordingly, SCCP would treat ETP holders, regardless of class, just like PHLX members both in terms of SCCP participant qualification requirements and privileges of SCCP participant status.

[6] 15 U.S.C. 8q–1(b)(3)(F).

[7] 17 CFR 200.30–3(a)(12).

SECURITIES AND EXCHANGE COMMISSION

[Release No. 34–45265; File No. SR–SCCP–2001–06]

Self-Regulatory Organizations; Stock Clearing Corporation of Philadelphia; Order Approving a Proposed Rule Change to Increase the Margin Threshold for Margin Members in Certain Nasdaq National Market Securities

January 10, 2002.

On April 30, 2001, the Stock Clearing Corporation of Philadelphia (''SCCP'') filed with the Securities and Exchange Commission (''Commission'') a proposed rule change (File No. SR–SCCP–00–06) pursuant to section 19(b)(1) of the Securities Exchange Act of 1934 (''Act'').[1] Notice of the proposal was published in the **Federal Register** on July 26, 2001.[2] On July 26, 2001, SCCP amended the proposed rule change.[3] No comment letters were received. For the reasons discussed below, the Commission is approving the proposed rule change.

I. Description

SCCP Rule 9 provides in part that SCCP will provide margin accounts for margin members that clear and settle their transactions through SCCP's omnibus clearance and settlement account. SCCP provides margin for such accounts based on SCCP's Rule 9 and other relevant SCCP rules, by-laws, and procedures and Regulation T of the Board of Governors of the Federal Reserve System. Currently, margin members who are designated as specialists or alternate specialists in an exchange listed security have a margin financing threshold rate of 15 percent for positions in those securities held in their specialist accounts. Members holding positions for which they are not designated as specialist or alternative specialist have a non-specialist margin rate of 50 percent. Pursuant to Rule 9, SCCP may issue margin calls to any margin member when the margin requirement exceeds the account equity.

The rule change amends SCCP's providers to specify a margin financing threshold rate of 25 percent for members registered as specialists and alternate specialists in Nasdaq NM securities. It should be noted that the Philadelphia Stock Exchange, Inc. (''Phlx'') has recently reinstated its over the counter/

[1] 15 U.S.C. 78s(b)(1).

[2] Securities Exchange Act Release No. 44582 (July 20, 2001), 66 FR 39071.

[3] The amendment was technical in nature and did not require republication of the notice.

unlisted trading privileges (''OTC/UTP'') pilot program for trading activity during regular trading hours.[4] SCCP expects that some of its margin members will be registered in certain of the eligible Nasdaq NM securities once the Phlx begins trading Nasdaq NM securities again.

It also should be noted that no other aspects of the SCCP procedures respecting Rule 9 are being modified. The rule change establishes a margin financing threshold rate of 25 percent for margin members registered as specialists or alternative specialists in certain Nasdaq NM securities.

II. Discussion

Section 17A(b)(3)(F)[5] of the Act requires that the rules of a clearing agency be designed to assure the safeguarding of securities and funds which are in the custody or control of the clearing agency or for which the clearing agency is responsible. Once the Phlx begins trading Nasdaq NM securities again, it will be prudent for SCCP to require a higher margin financing threshold rate (25 percent) for Nasdaq NM securities than for exchange listed securities (15 percent).[6] Accordingly, the Commission finds that the higher margin financing threshold rate for Nasdaq NM securities should help SCCP meet its statutory safeguarding obligations.

III. Conclusion

On the basis of the foregoing, the Commission finds that the proposal is consistent with the requirements of the Act and in particular with the requirements of section 17A(b)(3)(F) of the Act and the rules and regulations thereunder.

It is therefore ordered, pursuant to Section 19(b)(2) of the Act, that the proposed rule change (File No. SR–SCCP–2001–06) be and hereby is approved.

For the Commission by the Division of Market Regulation, pursuant to delegated authority.[7]

Margaret H. McFarland,

Deputy Secretary.

[FR Doc. 02–1106 Filed 1–15–02; 8:45 am]

BILLING CODE 8010–01–M

[4] Securities Exchange Act Release No. 45182 (December 20, 2001), 66 FR 67609 (December 31, 2001) [File No. SR–Phlx–00–20]

[5] 15 U.S.C. 78q–1(b)(3)(F).

[6] SCCP recently reviewed volatility levels for the Nasdaq 100 index and Nasdaq Composite index as compared to the Dow Jones Industrial average and the NYSE Composite index indicated significantly higher volatility levels over 10 day, 20 day, 50 day, and 90 day time periods.

[7] 17 CFR 200.30–3(a)(12).

SMALL BUSINESS ADMINISTRATION

Data Collection Available for Public Comments and Recommendations

ACTION: Notice and request for comments.

SUMMARY: In accordance with the Paperwork Reduction Act of 1995, this notice announces the Small Business Administration's intentions to request approval on a new, and/or currently approved information collection.

DATES: Submit comments on or before March 18, 2002.

ADDRESSES: Send all comments regarding whether this information collection is necessary for the proper performance of the function of the agency, whether the burden estimates are accurate, and if there are ways to minimize the estimated burden and enhance the quality of the collection, to Carol Walker, Chief, Office of Civil Rights Compliance Small Business Administration, 409 3rd Street, SW., Suite 6400, Washington DC 20416

FOR FURTHER INFORMATION CONTACT: Carol Walker, Chief, Civil Rights Compliance (202) 205–7149 or Curtis B. Rich, Management Analyst, (202) 205–7030.

SUPPLEMENTARY INFORMATION:

Title: Notice to New Borrowers.

Form No: 793.

Description of Respondents: Companies are requested to keep records in order for SBA to determine the compliance status of recipient.

Annual Responses: 24,985.

Annual Burden: 5,767.

ADDRESSES: Send all comments regarding whether these information collections are necessary for the proper performance of the function of the agency, whether the burden estimates are accurate, and if there are ways to minimize the estimated burden and enhance the quality of the collections, to Sandra Johnston, Program Analyst, Office of Financial Assistance Small Business Administration, 409 3rd Street, SW., Suite 8300, Washington DC 20416.

FOR FURTHER INFORMATION CONTACT: Sandra Johnston, Program Analyst (202) 205–7528 or Curtis B. Rich, Management Analyst, (202) 205–7030.

Title: Statement of Personal History.

Form No: 1081.

Description of Respondents: Certified Development Companies.

Annual Responses: 300.

Annual Burden: 75.

Title: Servicing Agent Agreement.

Form No: 1506.

Description of Respondents: Certified Development Companies.

Annual Responses: 4,200.

Annual Burden: 4,200.

Jacqueline White,

Chief, Administrative Information Branch.

[FR Doc. 02–1133 Filed 1–15–02; 8:45 am]

BILLING CODE 8025–01–P

SMALL BUSINESS ADMINISTRATION

Public Federal Regulatory Enforcement Fairness Roundtable; Region IV Regulatory Fairness Board

The Small Business Administration Region IV Regulatory Fairness Board and the SBA Office of the National Ombudsman, will hold a Public Roundtable on Thursday, January 17, 2002 at 1 p.m. at Capital Plaza Holiday Inn, 405 Wilkinson Blvd., Frankfort, Kentucky 40601, to provide small business owners and representatives of trade associations with an opportunity to share information concerning the federal regulatory enforcement and compliance environment.

Anyone wishing to attend or to make an oral presentation must contact Jeri Grant in writing or by fax, in order to be put on the agenda. Jeri Grant, Kentucky District Office, U.S. Small Business Administration, Room 188, 600 Dr. Martin Luther King, Jr. Place, Louisville, KY 40202, Phone (502) 582–5971 ext. 224, fax (502) 582–5009, e-mail *jeri.grant@sba.gov.*

For more information see our web site at *http://www.sba.gov/ombudsman/events/dsp_roundtable.html.*

Steve Tupper,

Committee Management Officer.

[FR Doc. 02–1045 Filed 1–15–02; 8:45 am]

BILLING CODE 8025–01–P

SMALL BUSINESS ADMINISTRATION

Region V—Minnesota District Advisory Council Public Meeting

The Small Business Administration Region V Minnesota District Advisory Council, located in the geographical area of Minneapolis, Minnesota, will hold a public meeting at 11:30 a.m. central time on Friday, February 8, 2002, at Maria's Café, 1113 Franklin Avenue East, Minneapolis, MN 55404, to discuss such matters as may be presented by members, staff of the Small Business Administration, or others present.

Anyone wishing to make an oral presentation to the Board must contact Edward A. Daum, District Director, in writing by letter or fax no later than February 7, 2002, in order to be put on the agenda. Edward A. Daum, District

Director, U.S. Small Business Administration, 100 N. 6th Street, Suite 210–C, Minneapolis, MN 55403, (612) 370–2306 phone (612) 370–2303 fax.

Steve Tupper,

Committee Management Officer.

[FR Doc. 02–1046 Filed 1–15–02; 8:45 am]

BILLING CODE 8025–01–P

OFFICE OF THE UNITED STATES TRADE REPRESENTATIVE

Notice of Meeting of the Industry Sector Advisory Committee on Small and Minority Business (ISAC–14)

AGENCY: Office of the United States Trade Representative.

ACTION: Notice of an opened meeting.

SUMMARY: The Industry Sector Advisory Committee on Small and Minority Business (ISAC–14) will hold a meeting on January 28, 2002, from 9 a.m. to 3 p.m. The meeting will be opened to the public from 9 a.m. to 3 p.m.

DATES: The meeting is scheduled for January 28, 2002, unless otherwise notified.

ADDRESSES: The meeting will be held in Conference Room C, of the Minority Business Development Agency (MBDA), located at 26 Federal Plaza, New York, New York 10278.

FOR FURTHER INFORMATION CONTACT: Millie Sjoberg, Pam Wilbur or Kelly Parsons (principal contacts), at (202) 482–4792, Department of Commerce, 14th Street and Constitution Avenue, NW., Washington, DC 20230 or myself on (202) 395–6120.

SUPPLEMENTARY INFORMATION: During the opened portion of the meeting the agenda topics to be addressed will be:

- Discussion on the impact of the September 11th attacks on Small Business exporters, including presentations by officials from the Small Business Administration (SBA), MBDA, U.S. Customs, Federal Emergency Management Agency (FEMA), the New York City Mayor's office, the New York City Comptroller, the New York City public advocate, the New York City Fire Department, the New York City USFCS; and,
- Discussion on the upcoming APEC SME Ministerial.

Elizabeth A. Gianni,

Acting Assistant U.S. Trade Representative for Intergovernmental Affairs and Public Liaison.

[FR Doc. 02–1097 Filed 1–15–02; 8:45 am]

BILLING CODE 3190–01–M

DEPARTMENT OF TRANSPORTATION

Office of the Secretary

Aviation Proceedings, Agreements Filed During the Week Ending December 21, 2001

The following Agreements were filed with the Department of Transportation under the provisions of 49 U.S.C. sections 412 and 414. Answers may be filed within 21 days after the filing of the application.

Docket Number: OST–2001–11182.
Date Filed: December 17, 2001.
Parties: Members of the International Air Transport Association.
Subject:
PTC23 EUR–SEA 0129 dated 14 December 2001, Mail Vote 186—Resolution 010r.
TC23/TC123 Europe-South East Asia Special Passenger, Amending Resolution 010r r1.
PTC23 EUR–SEA 0130 dated 14 December 2001, Mail Vote 187—Resolution 002 r2–r26.
TC23/TC123 Europe-South East Asia Standard, Revalidation Resolution.
Report—PTC23 EUR–SEA 0128 dated 7 December 2001, TC23/TC123 Europe-South East Asia Policy Group Report.
Tables—PTC23 EUR–SEA Fares 0035, dated 14 December 2001, *Intended effective date:* 15 March 2002 and 1 April 2002.

Docket Number: OST–2001–11183.
Date Filed: December 17, 2001.
Parties: Members of the International Air Transport Association.
Subject:
PTC23 ME–TC3 0133 dated 18 December 2001, Mail Vote 189—Resolution 010t.
TC23/TC123 Middle East–TC3 Special Passenger, Amending Resolution, *Intended effective date:* 1 April 2002.

Docket Number: OST–2001–11186.
Date Filed: December 17, 2001.
Parties: Members of the International Air Transport Association.
Subject:
IATA telexes TE537/TE542/TE549, dated 7/10/14 December 2001, Mail Vote 188—Resolution 010.
TC23/TC123 Europe-Japan/Korea, Middle East–TC3, Africa–TC3 and TC123 North/Mid/South Atlantic, Special Passenger Amending Resolution from Japan, *Intended effective date:* 1 April 2002.

Docket Number: OST–2001–11203.
Date Filed: December 19, 2001.
Parties: Members of the International Air Transport Association.
Subject:
TC31 North and Central Pacific and TC31 Circle Pacific, PTC31 N&C/CIRC 0184 dated 16 November 2001 r1–r2, PTC31 N&C/CIRC 0185 dated 16 November 2001 r1–r2, PTC31 N&C/CIRC 0186 dated 16 November 2001 r10–r31, PTC31 N&C/CIRC 0187 dated 16 November 2001 r32–r46, PTC31 N&C/CIRC 0192 dated 7 December 2001.
(Technical Correction), Minutes—PTC31 N&C/CIRC 0193, dated 21 December 2001.
Tables—PTC31 N&C/CIRC Fares 0088, dated 7 December 2001.
PTC31 N&C/CIRC Fares 0089 dated 7 December 2001, PTC31 N&C/CIRC Fares 0090 dated 7 December 2001, *Intended effective date:* 1 April 2002.

Docket Number: OST–2001–11221.
Date Filed: December 20, 2001.
Parties: Members of the International Air Transport Association.
Subject:
TC31 North and Central Pacific, between Malaysia and USA.
PTC31 N&C/CIRC 0189, dated 16 November 2001, between Malaysia and USA r1–r13.
Minutes—PTC31 N&C/CIRC 0194, dated 21 December 2001.
Tables—PTC12 N&C/CIRC Fares 0092, dated 7 December 2001.
Intended effective date: 1 April 2002.

Docket Number: OST–2001–11222.
Date Filed: December 20, 2001.
Parties: Members of the International Air Transport Association.
Subject:
TC31 North and Central Pacific—TC3–Central America, South America.
PTC31 N&C/CIRC 0188 dated 16 November 2001.
TC3–Central America, South America Resolution r1–r18, Tables—PTC31 N&C/CIRC Fares 0091, dated 7 December 2001.
Intended effective date: 1 April 2002.

Dorothy Y. Beard,

Federal Register Liaison.

[FR Doc. 02–1155 Filed 1–15–02; 8:45 am]

BILLING CODE 4910–62–P

DEPARTMENT OF TRANSPORTATION

Office of the Secretary

Notice of Applications for Certificates of Public Convenience and Necessity and Foreign Air Carrier Permits Filed Under Subpart B (formerly Subpart Q) During the Week Ending December 21, 2001

The following Applications for Certificates of Public Convenience and

Necessity and Foreign Air Carrier Permits were filed under subpart B (formerly subpart Q) of the Department of Transportation's Procedural Regulations (See 14 CFR 301.201 *et. seq.*). The due date for Answers, Conforming Applications, or Motions to Modify Scope are set forth below for each application. Following the Answer period DOT may process the application by expedited procedures. Such procedures may consist of the adoption of a show-cause order, a tentative order, or in appropriate cases a final order without further proceedings.

Docket Number: OST–2001–11198.

Date Filed: December 18, 2001.

Due Date for Answers, Conforming Applications, or Motion to Modify Scope: January 8, 2002.

Description: Application of Caribbean Star Airlines, Inc., pursuant to 49 U.S.C. section 41102 and subpart B, requesting issuance of a certificate of public convenience and necessity to engage in scheduled interstate air transportation.

Docket Number: OST–2001–11206.

Date Filed: December 19, 2001.

Due Date for Answers, Conforming Applications, or Motion to Modify Scope: January 9, 2002.

Description: Application of Freedom Airlines, Inc., pursuant to 49 U.S.C. section 41102 and subpart B, requesting a certificate of public convenience and necessity to engage in scheduled interstate air transportation of persons, property and mail.

Docket Number: OST–2001–11230.

Date Filed: December 21, 2001.

Due Date for Answers, Conforming Applications, or Motion to Modify Scope: January 11, 2002.

Description: Application of Transcarga Intl. Airways, C.A., pursuant to 49 U.S.C. section 41302, 14 CFR parts 211 and 212 and subpart B, requesting issuance of a foreign air carrier permit to engage in charter (non-scheduled) foreign air transportation of property and mail between a point or points in Venezuela, on the one hand, and a point or points in the United States, to include: Miami, Florida; New York, New York; Houston, Texas; Aguadilla, Puerto Rico; and, San Juan, Puerto Rico.

Docket Number: OST–2001–11235.

Date Filed: December 21, 2001.

Due Date for Answers, Conforming Applications, or Motion to Modify Scope: January 11, 2002.

Description: Application of Ogden Flight Services Group, Inc., pursuant to 49 U.S.C. section 41102 and subpart B, requesting a certificate of public convenience and necessity to engage in foreign charter air transportation of persons, property and mail.

Dorothy Y. Beard,

Federal Register Liaison.

[FR Doc. 02–1156 Filed 1–15–02; 8:45 am]

BILLING CODE 4910–62–P

DEPARTMENT OF TRANSPORTATION

Coast Guard

[USCG–2001–11137]

Maritime Security

AGENCY: Coast Guard, DOT.

ACTION: Notice of availability; request for comment.

SUMMARY: The Coast Guard announces the availability of the maritime security public workshop agenda and a new comment period closing date. The public workshop is to discuss security procedures, programs, and capabilities within marine transportation systems. The focus of the workshop will be on identifying possible security measures, standards, and responses to threats and acts of crime and terrorism.

DATES: The public workshop will be held on January 28 through 30, 2002, from 9 a.m. to 5 p.m. We may end the workshop early, if we have covered all of the agenda topics and if the people attending have no further comments. In order to allow comments on the results of this workshop, comments and related material must reach the Docket Management Facility on or before March 15, 2002, rather than the February 14, 2002, date originally requested in the **Federal Register** on December 17, 2001 (66 FR 65020).

ADDRESSES: The workshop will be held at the following location: Grand Hyatt Washington at Washington Center, 1000 H Street, NW, Washington DC, 20001, Phone 202–582–1234.

You may submit your comments directly to the Docket Management Facility. To make sure that your comments and related material do not enter the docket [USCG–2001–11137] more than once, please submit them by only one of the following means:

(1) Electronically through the Web Site for the Docket Management System at *http://dms.dot.gov/.*

(2) By fax to the Docket Management Facility at 202–493–2251.

(3) By delivery to room PL–401 on the Plaza level of the Nassif Building, 400 Seventh Street SW., Washington, DC, between 9 a.m. and 5 p.m., Monday through Friday, except Federal holidays. The telephone number is 202–366–9329.

(4) By mail to the Docket Management Facility, (USCG–2001–11137), U.S. Department of Transportation, room PL–401, 400 Seventh Street SW., Washington, DC 20590–0001.

The Docket Management Facility maintains the public docket for this notice. Comments and material received from the public, as well as documents mentioned in this notice as being available in the docket, will become part of this docket and will be available for inspection or copying at room PL–401 on the Plaza level of the Nassif Building, 400 Seventh Street SW., Washington, DC, between 9 a.m. and 5 p.m., Monday through Friday, except Federal holidays. You may also find this notice in the docket on the Internet at *http://dms.dot.gov/.* Comments in the docket are available to the public for inspection and further comment, including proprietary information if submitted.

FOR FURTHER INFORMATION CONTACT: For information concerning this notice or the public workshop, write or call CDR Sue Englebert, at the Administrative and Coordination Division (G–M–1), *senglebert@comdt.uscg.mil,* or at 202–267–2388. If you contacted CDR Rand prior to January 7, 2002 to request a presentation time during the workshop, you will be contacted by January 23, 2002 with your scheduled presentation time and location. All presentation times have been filled therefore; additional requests are no longer accepted. If you have questions on viewing or submitting material to the docket, call Dorothy Beard, Chief, Dockets, Department of Transportation, at 202–366–5149.

SUPPLEMENTARY INFORMATION:

Request for Comments

We encourage you to participate in this workshop by submitting comments and related material. If you do so, please include your name and address, identify the docket number [USCG–2001–11137] and give the reason for each comment. You may submit your comments and material electronically, by fax, by delivery, or by mail to the Docket Management Facility at the address under **ADDRESSES**; but please submit your comments and material by only one means. If you submit them by mail or delivery, submit them in an unbound format, no larger than 8½ by 11 inches, suitable for copying and electronic filing. If you submit them by mail and would like to know that they reached the Facility, please enclose a stamped, self-addressed postcard or envelope. We will consider all comments and material received during the comment period.

Background and Purpose

For the reasons discussed in a notice of workshop, published in the **Federal Register** on December 17, 2001 (66 FR 65020), the Coast Guard will conduct a public workshop to assess existing marine transportation systems (MTS) security standards and measures and to gather ideas on possible improvements. We request workshop attendees to provide information about all Federal, State, and local government laws, procedures, regulations, and standards that are either functioning or that are planned. We will provide copies of international standards and Coast Guard regulations concerning the security of MTS. We also request industry to provide any current and planned standards and procedures covering the security of vessels and facilities.

The prior notice outlined general topics that will be focused on during the workshop, though it did not contain a specific agenda. Workshop attendees will be asked to divide into four workgroups to discuss the physical security and operational measures for facilities, vessels, and ports, as well as identification or credentialing measures that could be used to control access to facilities, vessels, or sensitive areas. Each workgroup's goal will be to develop criteria, measures to meet such criteria, and possible security performance standards for the criteria within their area of concentration. On Tuesday afternoon, January 29, 2002 the workgroups will summarize the results of their discussions in a brief presentation. Attendees will be provided an opportunity to comment on the impact, cost, and estimated value of the criteria, measures, and standards developed during this workshop. The workshop presentations will be included in the docket by February 4, 2002. The final workshop report will be placed in the docket by February 28, 2002. Comments on the workshop presentations will be accepted until March 15, 2002 as opposed to February 14, 2002, and should be sent to the Docket Management Facility at the address under **ADDRESSES**.

The following is the agenda for the public workshop, and is subject to change:

Agenda

Monday: January 28, 2002

8:30 a.m.: Sign-in.

9 a.m.: Introduction and overview.

10:15–11:30 a.m.: Morning discussion with breakout sessions to review current criteria, introduce criteria attendees bring, and develop criteria for the following:

(1) Physical security and operational measures—Facilities

(2) Physical security and operational measures—Vessels

(3) Physical security and operational measures—Ports

(4) Access Control—Credentials

11:30 a.m.–1 p.m.: Lunch break.

1–3:30 p.m.: Afternoon discussion with breakout sessions in the same workgroups as above to develop a list of possible measures to meet the criteria.

4–5 p.m.: Public presentations. (A program for these presentations will be available at the workshop.)

Tuesday: January 29, 2002

8:30 a.m.: Sign-in.

9–11:30 a.m.: Morning discussion with breakout sessions in the same workgroups as above to develop performance standards that could be used to evaluate the physical security and operational measure criteria.

11:30–1 p.m.: Lunch break.

1–3 p.m.: Workgroups present summations of their breakout sessions.

3–4 p.m.: Open discussion of the information presented by each workgroup.

4–5 p.m.: Public presentations. (A program for these presentations will be available at the workshop.)

Wednesday: January 30, 2002

9–11 a.m.: Opportunity for comment and further discussion for workshop attendees.

Dated: January 11, 2002.

Joseph J. Angelo,

Director of Standards, Marine Safety and Environmental Protection.

[FR Doc. 02–1184 Filed 1–11–02; 4:07 pm]

BILLING CODE 4910–15–U

DEPARTMENT OF TRANSPORTATION

Federal Aviation Administration

[Summary Notice No. PE–2001–95]

Petitions for Exemption; Summary of Petitions Received

AGENCY: Federal Aviation Administration (FAA), DOT.

ACTION: Notice of petitions for exemption received.

SUMMARY: Pursuant to FAA's rulemaking provisions governing the application, processing, and disposition of petitions for exemption part 11 of Title 14, Code of Federal Regulations (14 CFR), this notice contains a summary of certain petitions seeking relief from specified requirements of 14 CFR. The purpose of this notice is to improve the public's awareness of, and participation in, this aspect of FAA's regulatory activities. Neither publication of this notice nor the inclusion or omission of information in the summary is intended to affect the legal status of any petition or its final disposition.

DATES: Comments on petitions received must identify the petition docket number involved and must be received on or before February 5, 2002.

ADDRESSES: Send comments on any petition to the Docket Management System, U.S. Department of Transportation, Room Plaza 401, 400 Seventh Street, SW., Washington, DC 20590–0001. You must identify the docket number FAA–2000–XXXX at the beginning of your comments. If you wish to receive confirmation that FAA received your comments, include a self-addressed, stamped postcard.

You may also submit comments through the Internet to *http://dms.dot.gov.* You may review the public docket containing the petition, any comments received, and any final disposition in person in the Dockets Office between 9 a.m. and 5 p.m., Monday through Friday, except Federal holidays. The Dockets Office (telephone 1–800–647–5527) is on the plaza level of the NASSIF Building at the Department of Transportation at the above address. Also, you may review public dockets on the Internet at *http://dms.dot.gov.*

FOR FURTHER INFORMATION CONTACT: Forest Rawls (202) 267–8033, Sandy Buchanan-Sumter (202) 267–7271, or Vanessa Wilkins (202) 267–8029, Office of Rulemaking (ARM–1), Federal Aviation Administration, 800 Independence Avenue, SW., Washington, DC 20591.

This notice is published pursuant to 14 CFR 11.85 and 11.91.

Issued in Washington, DC, on January 11, 2002.

Donald P. Byrne,

Assistant Chief Counsel for Regulations.

Petitions for Exemption

Docket No.: FAA–2001–10442.

Petitioner: Era Aviation, Inc.

Section of 14 CFR Affected: 14 CFR 119.71.

Description of Relief Sought: To allow Era to employ a captain as a chief pilot while he is pursuing medical requalification for the position.

Docket No.: FAA–2001–10622.

Petitioner: Papillon Grand Canyon Helicopters.

Section of 14 CFR Affected: 14 CFR 135.265(d).

Description of Relief Sought: To allow PGCH to engage flight crewmembers on

a seven days on, seven days off work rotation schedule.

Docket No.: FAA–2001–11150.

Petitioner: F.S. Air Service, Inc.

Section of 14 CFR Affected: 14 CFR 25.857(b)(3).

Description of Relief Sought: To allow FSAS to configure the CASA C–212 CC and CD series airplane in a passenger/cargo configuration and be exempt from the requirements of 14 CFR 25.857(b)(3) for a ''separate approved smoke detector or fire detector system to give warning at the pilot or flight engineer station.''

[FR Doc. 02–1160 Filed 1–15–02; 8:45 am]

BILLING CODE 4910–13–M

DEPARTMENT OF TRANSPORTATION

Federal Aviation Administration

[Summary Notice No. PE–2001–96]

Petitions for Exemption; Summary of Dispositions of Petitions Issued

AGENCY: Federal Aviation Administration (FAA), DOT.

ACTION: Notice of Dispositions of prior petitions.

SUMMARY: Pursuant to FAA's rulemaking provisions governing the application, processing, and disposition of petitions for exemption part 11 of Title 14, Code of Federal Regulations (14 CFR), this notice contains a summary of dispositions of certain petitions previously received. The purpose of this notice is to improve the public's awareness of, and participation in, this aspect of FAA's regulatory activities. Neither publication of this notice nor the inclusion or omission of information in the summary is intended to affect the legal status of any petition or its final disposition.

FOR FURTHER INFORMATION CONTACT: Forest Rawls (202) 267–8033, Sandy Buchanan-Sumter (202) 267–7271, or Vanessa Wilkins (202) 267–8029, Office of Rulemaking (ARM–1), Federal Aviation Administration, 800 Independence Avenue, SW., Washington, DC 20591.

This notice is published pursuant to 14 CFR 11.85 and 11.91.

Issued in Washington, DC., on January 11, 2002.

Donald P. Byrne,

Assistant Chief Counsel for Regulations.

Dispositions of Petitions

Docket No.: FAA–2001–11089 (previously Docket No. 28660).

Petitioner: Collings Foundation.

Section of 14 CFR Affected: 14 CFR 91.315, 91.319(a), 119.5(g), and 119.21(a).

Description of Relief Sought/Disposition: To permit Collings to operate its Boeing B–17 aircraft, which is certificated in the limited category, for the purpose of carrying passengers on local flights for compensation or hire. *Grant, 12/13/2001, Exemption No. 6540D*

Docket No.: FAA–2001–10831.

Petitioner: Pomona Valley Pilots Association.

Section of 14 CFR Affected: 14 CFR 135.251, 135.255, 135.353, and appendixes I and J to part 121.

Description of Relief Sought/Disposition: To permit PVPA to conduct local sightseeing flights at Cable Airport, Upland, California, during January 2002, for compensation or hire, without complying with certain anti-drug and alcohol misuse prevention requirements of part 135. *Grant, 12/11/2001, Exemption No. 7682*

Docket No.: FAA–2001–11081.

Petitioner: Merlin Airways.

Section of 14 CFR Affected: 14 CFR 135.143(c)(2).

Description of Relief Sought/Disposition: To permit Merlin to operate certain aircraft under part 135 without a TSO–C112 (Mode S) transponder installed in the aircraft. *Grant, 12/11/2001, Exemption No. 7681*

Docket No. 30155.

Petitioner: University of Oklahoma Department of Aviation.

Section of 14 CFR Affected: 14 CFR 141.36(b)(2)(i), (c)(3)(i), (d)(1), and (d)(2)(i).

Description of Relief Sought/Disposition: To permit ODA to use an assistant chief flight instructor (1) who has not had at least 1 year of flight instructor training experience for a course of training leading to the issuance of a recreational or private pilot certificate or rating, (2) who has not had at least 1 year of instrument flight instructor training experience for a course of training leading to the issuance of an instrument rating or a certification with instrument privileges, and (3) who has not had at least 1,000 hours as pilot in command and 1½ years of flight instructor training experience for a course of training leading to the issuance of other than a recreational or private pilot certificate or rating, or an instrument rating or a certificate with instrument privileges, *Denial, 12/07/2001, Exemption No. 7683.*

Docket No.: FAA–2001–11129.

Petitioner: Heartland Aviation, Inc.

Section of 14 CFR Affected: 14 CFR 135.143(c)(2).

Description of Relief Sought/Disposition: To permit Heartland to operate certain aircraft under part 135 without a TSO–C112 (Mode S) transponder installed in the aircraft. *Grant, 12/14/2001, Exemption No. 7684*

Docket No.: FAA–2001–11050.

Petitioner: Big Sky Transportation dba Big Sky Airlines.

Section of 14 CFR Affected: 14 CFR 135.143(c)(2).

Description of Relief Sought/Disposition: To permit BSA to operate certain aircraft under part 135 without a TSO–C112 (Mode S) transponder installed in the aircraft. *Grant, 12/19/2001, Exemption No. 7685*

[FR Doc. 02–1161 Filed 1–15–02; 8:45 am]

BILLING CODE 4910–13–M

DEPARTMENT OF TRANSPORTATION

Federal Aviation Administration

[Summary Notice No. PE–2001–97]

Petitions for Exemption; Summary of Dispositions of Petitions Issued

AGENCY: Federal Aviation Administration (FAA), DOT.

ACTION: Notice of Dispositions of prior petitions.

SUMMARY: Pursuant to FAA's rulemaking provisions governing the application, processing, and disposition of petitions for exemption part 11 of Title 14, Code of Federal Regulations (14 CFR), this notice contains a summary of dispositions of certain pertitions previously received. The purpose of this notice is to improve the public's awareness of, and participation in, this aspect of FAA's regulatory activities. Neither publication of this notice nor the inclusion or omission of information in the summary is intended to affect the legal status of any petition or its final disposition.

FOR FURTHER INFORMATION CONTACT: Forest Rawls (202) 267–8033, Sandy Buchanan-Sumter (202) 267–7271, or Vanessa Wilkins (202) 267–8029, Office of Rulemaking (ARM–1), Federal Aviation Administration, 800 Independence Avenue, SW, Washington, DC 20591.

This notice is published pursuant to 14 CFR 11.85 and 11.91.

Dated: Issued in Washington, DC, on January 11, 2002.

Donald P. Byrne,

Assistant Chief Counsel for Regulations.

Dispositions of Petitions

Docket No.: FAA–2001–10004.

Petitioner: America West Airlines, Inc.

Section of 14 CFR Affected: 14 CFR 93.123.

Description of Relief Sought/ Disposition: To permit America West to operate three flights at Ronald Reagan Washington National Airport, *Grant, 12/10/2001, Exemption No. 5133J.*

Docket No.: FAA–2001–11054.

Petitioner: SC Aviation, Inc.

Section of 14 CFR Affected: 14 CFR 135.143(c)(2).

Description of Relief Sought/ Disposition: To permit SCA to operate certain aircraft under part 135 without TSO–C112 (Mode S) transponder installed in the aircraft. *Grant, 12/05/2001, Exemption No. 7673.*

Docket No.: FAA–2001–11059.

Petitioner: Mulchatna Air Service.

Section of 14 CFR Affected: 14 CFR 135.143(c)(2).

Description of Relief Sought/ Disposition: To permit MAS to operate certain aircraft under part 135 without a TSO–C112 (Mode S) transponder installed in the aircraft. *Grant, 12/05/2001, Exemption No. 7674.*

Docket No.: FAA–2000–8091.

Petitioner: Mr. Larry G. Munro.

Section of 14 CFR Affected: 14 CFR 61.3(j)(1).

Description of Relief Sought/ Disposition: To permit Mr. Munro to act as a pilot in certain international operations after reaching his 60th birthday. *Denial, 11/27/2001, Exemption No. 7669.*

[FR Doc. 02–1162 Filed 1–15–02; 8:45 am]

BILLING CODE 4910–13–M

DEPARTMENT OF TRANSPORTATION

Federal Highway Administration

Federal Transit Administration

Model Deployment of a Regional, Multi-Modal 511 Traveler Information System; Request for Participation

AGENCY: Federal Highway Administration (FHWA), Federal Transit Administration (FTA), DOT.

ACTION: Notice; request for participation.

SUMMARY: The Federal Highway Administration (FHWA) and the Federal Transit Administration (FTA) are seeking applications from public agencies that are currently deploying, or operating, a telephone system that delivers traveler information services so that those agencies may enhance their system to provide a high quality 511 service. This effort will provide for the enhancements to an existing telephone traveler information service, which has converted to the nationally available three-digit telephone number, 511, or will soon convert to 511. The purpose of this model deployment is to establish and document an innovative example of a 511 system that advances content quality and user interfaces. Applicants in response to this notice are encouraged to demonstrate their readiness to develop and implement a state-of-the-art 511 traveler information service and to articulate the adequacy of their proposed approach related to geographic areas, institutional coordination, and information to be provided.

DATES: Applications must be received at the office designated below on or before 4 p.m. on March 18, 2002.

ADDRESSES: Applications should be submitted to the U.S. Department of Transportation, Intelligent Transportation Systems (ITS) Joint Program Office (JPO), 511 Model Deployment, 400 Seventh St., SW., Room 3416, HOIT–1, Washington, DC 20590–0001.

FOR FURTHER INFORMATION CONTACT: For technical questions or concerns, please contact Mr. Robert Rupert, FHWA Office of Travel Management (HOTM–1), (202) 366–2194; Mr. Ron Boenau, FTA Advanced Public Transportation Systems Division (TRI–11), (202) 366–4995; or Mr. James Pol, FHWA Intelligent Transportation Systems (ITS) Joint Program Office (HOIT–1), (202) 366–4374. For legal questions or concerns please contact Ms. Gloria Hardiman-Tobin, FHWA Office of Chief Counsel (HCC–40), (202) 366–0780; or Ms. Linda Sorkin, FTA Office of Chief Counsel (HCC–20), (202) 366–1936; Department of Transportation, 400 Seventh Street, SW., Washington, D.C. 20590–0001. Office hours are from 8 a.m. to 4:30 p.m., e.t., Monday through Friday, except Federal holidays.

SUPPLEMENTARY INFORMATION:

Electronic Access

An electronic copy of this document may be downloaded using a modem and suitable communications software from the Government Printing Office's Electronic Bulletin Board Service at (202) 512–1661. Internet users may reach the Office of the Federal Register's home page at *http://www.nara.gov/fedreg* and the Government Printing Office's web page at *http://www.access.gpo.gov/nara.*

The document may also be viewed at the U.S. DOT's ITS home page at *http://www.its.dot.gov.*

Background

On July 21, 2000, the Federal Communications Commission assigned 511 as the nationwide traveler information telephone number and granted responsibility for it to government transportation agencies. The nationwide three-digit number utilizes and significantly advances the intelligent transportation infrastructure already in place to assist some States and cities in providing traveler information. Data obtained from 511 traveler information services will provide current information about bad weather, construction, or traffic jams that cause delays for businesses and the general public, as well as information about the status of transit buses, ferries, light rail, and other public transportation in local communities. In addition, by providing information that will direct drivers away from congestion and hazardous conditions, better access will be available for emergency vehicles responding to incidents.

This model deployment seeks to demonstrate the potential of 511 services to bring together various and disparate data, and provide useful information to travelers and potential travelers through a state-of-the-art telephone interface. The selected application (or applications) will demonstrate an understanding of the project objectives and will describe an approach that can be realistically accomplished within the schedule and funding constraints. The selected application will represent a location that presents a rich environment for generating a demand for traveler information. This environment will include recurring traffic congestion, on-going roadway construction impacting regional travel, variable weather conditions that impact travel, the availability of multiple modes of travel, and coordination with public safety agencies in a regional incident management program.

The timing of this model deployment has been planned by the U.S. DOT to take advantage of several on-going efforts by both the American Association of State Highway Transportation Officials (AASHTO) and the U.S. DOT. These efforts are at various stages of completion at the time of the release of this request for participation (RFP). It is the goal of the U.S. DOT that this model deployment illustrates how the innovative application of technologies can create a highly effective 511 service that sets a standard for high quality telephone traveler information. Some on-going research activities are likely to yield

products that will aid in the advancement of the selected agency's 511 system. These on-going research efforts include the following activities:

(a) 511 Early Adopters Evaluations—Six areas of the country have been identified as early adopters of 511. These six areas are working with an independent evaluation team contracted by the FHWA to glean institutional and technical issues surrounding the redirection of existing traveler information phone numbers to 511. This is an on-going activity with reports available on the U.S. DOT 511 web page (*http://www.its.dot.gov/511/511.htm*). The six early adopters of 511 include metropolitan Cincinnati, Ohio (including Covington, Kentucky); San Francisco, California; Arizona (Statewide); Minnesota (Statewide); Utah (Statewide); and Detroit, Michigan.

(b) 511 Deployment Assistance and Coordination Program—The AASHTO is leading the 511 Deployment Coalition to develop policy and technical materials that will provide guidance to States and locations as they implement 511. Guidelines for the information content, service consistency, and quality of service will be available in the spring of 2002. More information on the guidelines can be obtained through *http://www.itsa.org/511.html*.

(c) Testing of XML conversion of the Society of Automotive Engineers (SAE) Advanced Traveler Information Systems (ATIS) Message Sets—The FHWA is currently testing the eXtensible Mark-up Language (XML) conversion of the SAE ATIS Message Sets through the implementation of a multi-jurisdictional traveler information service. The draft results of this test will be available by the end of 2001.[1]

(d) ATIS Data Fusion—The FHWA is beginning to develop guidelines for combining, or fusing, data from a variety of sources to produce traveler information. This effort focuses on examining the different levels of quality that can be achieved according to a set of operating scenarios. Draft data fusion guidelines will be available in early 2002, and will be retrievable through the U.S. DOT Web site at *http://www.its.dot.gov*.

Objectives and Scope of the 511 Model Deployment

The objective of the 511 model deployment is to ''push the envelope'' of traveler information quality production and dissemination, along with an innovative user interface that promotes ease of use without compromising the user's expectation for personalized information. The resulting deployment is expected to remain in operation following the end of the model deployment evaluation. The period of performance of the 511 model deployment is expected to be 12 months from the effective date of the partnership agreement.

The scope of this model deployment includes addressing the institutional coordination that is necessary to implement an effective, sophisticated 511 service. The agency lead for the project team to which this model deployment is awarded (hereafter referred to as ''lead agency'') will assess the extent of integration that is currently available among the key stakeholder agencies (highway agencies, transit organizations and public safety agencies). The lead agency will secure agreements from each stakeholder to provide their content to the 511 system, and forge agreements that enable the transmission of information with the greatest frequency possible to provide current information. The lead agency will ensure that all the information elements that will be received from the stakeholders, including frequency of transmission of information, are documented. The lead agency will develop appropriate message sets to convey each of the stakeholders' information to a consolidation point. The message sets shall take full advantage of the Society of Automotive Engineers (SAE) standard message sets for ATIS (standard SAE J2354).[2] The lead agency will also consider the XML translation of the SAE Message Sets to simplify transmission via the Internet to any number of media outlets. Other viable solutions for exchanging information among centers will be considered.

The lead agency will describe the operational concept for the 511 service that articulates the roles and responsibilities for each of the stakeholders in providing content for the innovative 511. This operational concept will fully describe how the project team will seek innovative methods to deliver telephone-based traveler information. The lead agency will also distinguish how the information among its stakeholders will be conveyed according to geographical context. The purpose of developing an operational concept is to guide the lead agency, the stakeholder agencies, and the project participants in an understanding of what their levels of effort will be in sustaining the innovative 511 system. In addition, the operational concept will aid in the incorporation of new functionalities as technology and customer demands evolve.

Two elements of the innovative 511 service should be highlighted:

(1) The project team to which this 511 model deployment is awarded (hereafter referred to as ''project team'') will perform data fusion of all stakeholder content. Effective data fusion will enable the 511 system to provide information to callers automatically on a route segment or corridor basis, with no direct contact necessary between callers and human operators. At a minimum, the content shall include: current traffic conditions; major service disruptions for public transportation properties; current information on active construction and maintenance projects along route segments that may affect traffic flow or restrict lanes; unplanned events, major incidents, or congestion that shut down or significantly restrict traffic for an extended period; transportation-related information associated with significant special events (fairs, sporting events, etc.); and abnormal weather or road surface conditions that could affect travel along the route segment. The project team will describe, in the operational concept, how the innovative 511 system will affect their existing methods of data fusion.

(2) The design of the user interface must allow callers to locate the content they desire quickly and efficiently. User interfaces must be consistent in appearance, but may vary in content according to the origin of the phone call, *i.e.*, whether the caller is mobile or landline based. The user interface must take advantage of proven voice-recognition, voice response, and synthesized speech technologies. ''Natural speech'' techniques are desired. Keypad entry interfaces alone will not be considered innovative technology for this 511 model deployment. The user interface should provide the most convenient method of information retrieval possible. Keypad entry interfaces rely upon extensive information trees which extends the user's retrieval time. The following top-level commands should be used when a system has the relevant information available: ''Transit Information,'' ''Highway Information,'' ''Airport Information,'' ''Rail Station Information,'' and ''Ferry Information.''

Upon the completion of the operational concept, the ITS Joint Program Office (ITS JPO) shall have the opportunity to review the progress of

[1] For more information, visit *http://www.mitretek.org/its/TripInfo/atis.html*

[2] More information on the SAE ATIS Message Sets can be obtained through *http://www.its-standards.net/Documents/J2354.pdf*

the project and determine the likelihood of a successful completion of the 511 model deployment. Upon completion of the review, the ITS JPO will determine if funding will be made available to the selected model deployment location for the completion of the innovative 511 service.

The project team will implement the 511 multi-modal, regional system and demonstrate that the system functions as described in the operational concept and as designed. The project team will ensure monitoring of the operational status of the 511 system, and that necessary adjustments are made. The project team will demonstrate that the 511 system has the stability criteria developed jointly between the U.S. DOT and the project team during the development of the operational concept. The project team will operate the stable 511 system in support of an evaluation for a period of time as jointly developed and agreed to during the development of the operational concept. The project team will provide an appropriate level of ongoing support to achieve completion of all deployment and testing tasks as described in the operational concept.

The project team will synthesize and present evaluation findings as they relate to the objectives of the model deployment. The project team will document the 511 system design, and synthesize the technical and institutional issues documented in previous tasks. The project team will submit a final report to the ITS JPO that includes the above information and describes the project and its findings.

Funding

The total amount of Federal funding available for this effort is estimated at $1,100,000. The instrument to provide funding, on a cost reimbursable basis, will be an ITS partnership agreement between the FHWA and a public organization. Multiple partnership agreements are anticipated. Federal funding authority is derived from § 5001(a)(5) of the Transportation Equity Act for the 21st Century (TEA–21), Public Law 105–178, 112 Stat. 107, 419 (1998). Actual award of funds will be subject to funding availability.

Matching Share

There is a statutorily required (refer to § 5001(b) and § 5207(d) of TEA–21) minimum twenty percent matching share that must be from non-federally derived funding sources, and must consist of either cash, substantial equipment contributions that are wholly utilized as an integral part of the project, or personnel services dedicated full-time to the 511 model deployment for a substantial period, as long as such personnel are not otherwise supported with Federal funds. The non-federally derived funding may come from State, local government, or private sector partners. Note that funding identified to support continued operations, maintenance, and management of the system will *not* be considered as part of the partnership's cost-share contribution.

Offerors are encouraged to consider additional matching share above and beyond the required minimum match described above. Those offerors willing to propose additional match may include the value of federally-supported projects directly associated with the 511 model deployment. Offerors that do propose additional matching share above and beyond the required minimum match may receive additional consideration in the proposal evaluation.

The U.S. DOT and the Comptroller General of the United States have the right to access all documents pertaining to the use of Federal ITS funds and non-Federal contributions. Grantees and subgrantees are responsible for obtaining audits in accordance with the Single Audit Act Amendments of 1996 (31 U.S.C. 7501–7507) and revised OMB Circular A–133, ''Audits of States, Local Governments, and Non-Profit Organizations.'' The audits shall be made by an independent auditor in accordance with generally accepted government auditing standards covering financial audits (refer to 49 CFR 18.26).

National Evaluation

Evaluation is the reasoned consideration of how well project goals and objectives are being achieved. The primary purpose of evaluation is to cause changes in the project so that it eventually meets or exceeds its goals and objectives. Formal, in-depth, independently conducted evaluations are funded by the ITS JPO.

The partnerships selected to participate in this 511 model deployment are expected to cooperate with the ITS JPO and its national evaluation team. The independent national evaluator is selected and provided by the ITS JPO.

This cooperation that is expected by the awarded partnership includes:

(a) Providing all relevant project information such as cost data (deployment, operations, and maintenance), project goals and objectives, contractual documents, project documentation, existing or archived data, benefits data, and other project related information;

(b) Ensuring that the relevant project information is provided to the independent national evaluator in a timely fashion;

(c) Identifying an evaluation point(s) of contact to represent the participating agencies in coordinating with the independent national evaluator;

(d) Making accommodations (where appropriate) for the independent national evaluator to be present at coordination or partnership meetings;

(e) Ensuring that any self-evaluation activities being conducted by the project participants are coordinated with and reviewed by the national evaluation effort; and

(f) Providing review of relevant reports, presentations, etc., prepared by the independent national evaluator.

Eligibility

To be eligible for participation in the 511 model deployment program, applications must:

(a) Demonstrate that they either have an operational 511 traveler information telephone system, or have a telephone system for traveler information that is prepared to convert to using 511;

(b) Demonstrate that the proposed location for the 511 model deployment experiences recurring congestion, has roadway construction that will significantly impact regional travel for the period of the model deployment, is likely to experience weather conditions that will impact regional travel during the period of the model deployment (snowstorms, hurricanes, etc.), offers multiple mode choices for regional travel, and has some form of regional incident management program that is coordinated with public safety agencies;

(c) Demonstrate that the transportation data and information generated from the federal funds applied to this model deployment, as well as all public sector matching funds, will be made available equally and freely (apart from the costs of the physical connection to retrieve such data) to all parties who express interest in such data or information;

(d) Demonstrate that sufficient funding is available to successfully complete all aspects of implementing the 511 model deployment;

(e) Contain a technical plan, a management and staffing plan, and a financial plan. Any portion of the application or its contents that may contain proprietary information shall be clearly indicated; otherwise, the application and its contents shall be non-proprietary; and

(f) Demonstrate a commitment to a 12 month schedule that will produce

results within the expected period of performance.

Instructions to Applicants

An application to participate in the 511 model deployment shall consist of three parts: (1) A technical plan describing the proposed project team and the approach for implementing 511 services in accordance with the objectives and scope; (2) a management and staffing plan that provides the names of all key personnel and the positions they will occupy as related to this project; and (3) a financial plan, that describes the proposed activities to be conducted with this funding. The complete application shall not exceed 35 pages in length, exclusive of appendices, résumés, and Memoranda of Understanding (MOUs) or other documents indicating cooperation among proposing parties. A page is defined as one side of an 8½ by 11-inch paper, with a type font no smaller than 12 point. Applicants must submit seven (7) copies plus an unbound reproducible copy. The cover sheet or front page of the application should include the name, address, e-mail address, fax number and phone number of an individual to whom correspondence and questions about the application may be directed.

The technical, management and staffing, and financial plans together shall describe the existing inter-agency, inter-jurisdictional, and public/private cooperation and partnership arrangements, working relationships, and information sharing that will be integral to the 511 model deployment. All inter-agency, inter-jurisdictional, and public/private cooperation and partnerships necessary to support the 511 model deployment shall be documented with signed MOUs, or alternate appropriate documents, that clearly define financial and programmatic responsibilities and relationships among the partners. Similarly, the application should document business relationships with the private sector to support the 511 model deployment, for example, as telecommunications providers or as providers of traveler information services or products. The MOUs, or alternate appropriate documents, must clearly describe and document the role of the private sector, and the financial and institutional arrangement(s) under which they are integrated into the 511 model deployment. Applicants should include copies of the MOUs or other indications of cooperation. Applicants are strongly encouraged to seek participation from certified disadvantaged business enterprises (see 49 CFR part 26), historically black colleges and universities, Hispanic serving institutions, and other minority colleges.

Applications shall be organized in the following three sections:

1. Technical Plan

Applications should describe the partnership or project team arrangements, which include providing the information described in the preceding paragraph. Applications should describe the methodology for advancing their existing, or soon-to-be-available, 511 system to provide a sophisticated user interface with high quality content. This technical approach, at a minimum, should:

(a) Describe the methodology to collocate and ultimately to fuse relevant data elements to provide 511 users with comprehensive, current, multi-modal traveler information, including a description of the current sources of information along with the sources of information that will be included for the innovative 511;

(b) Describe the provision of any personalized and/or geographically specific content to the 511 user (applicants must demonstrate an acknowledgement and understanding of the *ITS Fair Information and Privacy Principles* crafted by the Intelligent Transportation Society of America[3]);

(c) Describe a generalized migration plan that describes how and when the existing, or soon-to-be-deployed, 511 service will be migrated to the proposed innovative services;

(d) Describe how the enhanced 511 service will differ from the service already provided to the user in terms of sophistication of the user interface and the reliability and quality of the information provided; and

(e) Describe how the 511 service may be accessible for the rural and inter-city travelers.

2. Project Management and Staffing Plan

The application should include a management and staffing plan that provides a clear description of the lines of responsibility, authority, and communication among the participants in the 511 model deployment. The management and staffing plan shall include the names of all key personnel and the positions they will occupy as related to the 511 model deployment. Provide the estimated staffing in terms of length of employment for each staff member and categorized by the types of staff required. The management and staffing plan should demonstrate that the project manager is capable, available, and able to commit to a level of involvement that ensures project success. Also include brief biographical summaries of key technical and other personnel. Applicants should provide the schedule of all key activities, including contingency for possible difficulties.

3. Financial Plan

The application should provide a description of the cost of achieving the objectives of the model deployment, and the partnership's plans for ensuring the matching funds required by this solicitation. The application should provide a statement of commitment from the proposed 511 model deployment partners that affirms that the proposed funding is secure. The application should include all financial commitments, from both the public and private sector.

Selection Criteria

Applicants must submit acceptable technical, management and staffing, and financial plans together that provide sound evidence that the proposed partnership can successfully meet the objectives of the 511 model deployment. The ITS JPO will use the following criteria, in order of importance, in selecting locations for participation in the 511 model deployment.

1. Technical Plan

The technical plan must contain an operational concept and technical approach that demonstrates how the 511 model deployment will operate when fully implemented, as well as during any incremental implementation steps leading to full deployment. The technical plan must define the operational roles and responsibilities of the partners during operations (and key operator responsibilities). Applicants must describe the changes to existing systems and additional elements.

The technical plan will be evaluated on its adequacy and reasonableness to achieve the objectives of the 511 model deployment, as previously described under Objectives and Scope of the 511 Model Deployment. In particular, the technical plan will be evaluated for the overall concept and the extent to which it addresses the scope described for the 511 model deployment, including the content and user interface of the 511 system. Specifically, the following sub-criteria will be used to evaluate the technical proposal (these criteria are listed in order of importance):

[3] This document can be obtained through *http://www.itsa.org/privacy.html*

(a) The ability to provide frequently updated information from a variety of sources including traffic management, transit management, roadway weather information services, construction and road closure information, parking management, and emergency services;

(b) How well the applicant demonstrates the capacity to provide sophisticated, innovative solutions in content creation, fusion, and dissemination;

(c) How well the applicant demonstrates the capacity to provide sophisticated, innovative solutions in designing and implementing the user interface;

(d) The design of an implementation strategy including a timeline for rollout of the enhanced 511 service;

(e) The application of ITS Standards for information exchange and delivery; and

(f) The demonstrated ability to bring together State, metropolitan, and local partners to create a seamless, regional traveler information system.

2. Management and Staffing Plan

The management and staffing plan must demonstrate a reasonable estimate that reflects the level of effort and skills needed to successfully complete the 511 model deployment, along with the identification of the organizations that will supply the staff needed, lines of reporting, and responsibilities. The management and staffing plan must include the names and qualifications of key staff.

The management and staffing plan will demonstrate a commitment to hire or assign a project manager and provide adequate full-time staff to ensure timely implementation of the 511 model deployment. Proposed staff should have demonstrated skills for effective operations and management, or the commitment to acquiring the necessary skills in relevant technical areas, such as systems engineering and integration; telecommunications; and information management.

The selection will be based on the adequacy, thoroughness, and appropriateness of the management and staffing plan, including organization of the project team, staffing allocation, and the schedule for completing the proposed work. Some of the specific items that will be evaluated in the management and staffing plan are:

(a) The availability of key personnel among the participating agencies to attend periodic 511 coordination meetings;

(b) The key personnel that are focused on the systems engineering aspects for incorporating the enhancements to the existing, or soon-to-be-deployed, 511 service; and

(c) A staffing chart that demonstrates the relationships among the participating organizations, including the names of the key personnel from each of the organizations.

3. Financial Plan

The ITS JPO will evaluate the applications based on the total cost of the 511 model deployment, as well as the individual staffing costs. The financial plan must demonstrate that sufficient funding is available to successfully complete all aspects of the 511 model deployment as described in the technical plan. The financial plan must provide the financial information described previously under Instructions to Applicants. The financial plan must include a clear identification of the proposed funding for the 511 model deployment, including an identification of the required minimum 20% matching funds.

The financial plan must include a sound financial approach to ensure the timely deployment and the continued, long-term operations and management of the 511 system. The financial plan must include documented evidence of continuing fiscal capacity and commitment from anticipated public and private sources.

Authority: Sec. 5001(a)(5), sec. 5001(b), sec. 5207(d), Pub. L. 105–178, 112 Stat. 107, 420; 23 U.S.C. 315; 49 CFR 1.48; and 49 CFR 18.26.

Issued on: January 9, 2002.

Mary E. Peters,

Administrator, Federal Highway Administration.

Jennifer L. Dorn,

Administrator, Federal Transit Administration.

[FR Doc. 02–1163 Filed 1–15–02; 8:45 am]

BILLING CODE 4910–22–P

DEPARTMENT OF TRANSPORTATION

Federal Highway Administration

Federal Transit Administration

[FHWA Docket No. FHWA–2000–6757]

High Speed Rail Projects for the Congestion Mitigation and Air Quality Improvement Program (CMAQ)

AGENCIES: Federal Highway Administration (FHWA), Federal Transit Administration (FTA), DOT.

ACTION: Notice; final decision on CMAQ eligibility for high speed rail projects.

SUMMARY: This notice announces a decision regarding the eligibility of Congestion Mitigation and Air Quality Improvement (CMAQ) funds for projects outside nonattainment or maintenance area boundaries. A request for comments on this issue was published at 65 FR 16997 on March 30, 2000. Eligibility under the CMAQ program has already been granted for high speed rail improvements located within air quality nonattainment and maintenance areas. The issue raised by several States was if, and under what conditions, State departments of transportation (DOT) should be permitted to use their CMAQ allocations to fund high speed rail improvements located outside of nonattainment or maintenance areas. This notice summarizes the comments to the docket and addresses the key issues and concerns raised by respondents. In this notice, the FHWA and the FTA reaffirm the current policy which allows CMAQ funding for projects in close proximity to nonattainment and maintenance areas where it is determined that the air quality benefits will be realized primarily within such areas. Intercity rail lines, including high speed rail projects, compete equally with other types of projects under these criteria and have been funded under CMAQ in some places.

FOR FURTHER INFORMATION CONTACT: For the FHWA program office: Mr. Daniel Wheeler, Office of Natural Environment, (202) 366–2204. For the FTA program office: Mr. Abbe Marner, Office of Planning, (202) 366–4317. Office hours are from 8 a.m. to 4:30 p.m., e.t., Monday through Friday, except Federal holidays.

SUPPLEMENTARY INFORMATION:

Electronic Access

You may retrieve comments online through the Document Management System (DMS) at *http://dmses.dot.gov/submit.* The DMS in available 24 hours each day, 365 days each year. Electronic retrieval help and guidelines are available under the help section of the web site.

An electronic copy of this document may also be downloaded by using a computer, modem and suitable communications software from the Government Printing Office's Electronic Bulletin Board Service at (202) 512–1661. Internet users may also reach the Office of the Federal Register's home page at: *http://www.nara.gov/fedreg* and the Government Printing Office's web page at: *http://www.access.gpo.gov/nara.*

Background

The CMAQ program was established by the Intermodal Surface

Transportation Efficiency Act of 1991 (Pub. L. 102–240, 105 Stat. 1914) and reauthorized with some changes by the Transportation Equity Act for the 21st Century (TEA–21) in 1998 (Pub. L. 105–178, 112 Stat. 107). The primary purpose of the CMAQ program is to fund transportation projects that reduce air pollution emissions in areas designated by the U.S. Environmental Protection Agency (EPA) as nonattainment or maintenance with respect to a National Ambient Air Quality Standard (NAAQS).[1] Program guidance was issued by the FHWA and the FTA on April 28, 1999. This guidance document was published at 65 FR 9040 on February 23, 2000.

The current CMAQ statutory language, which is codified in section 149 of title 23 of the United States Code, requires that projects and programs proposed for CMAQ funding be for a designated area.[2] The FHWA and the FTA have generally interpreted the statute to allow CMAQ funding for projects within nonattainment and maintenance areas, but the agencies' guidance allows funding for proposals that are in close proximity to designated areas where the air quality benefits are primarily realized in those areas. For example, a park-and-ride lot located at the edge of a metropolitan area may reduce the number of cars going into that area by the same amount whether it is located just inside the officially designated boundary or just outside of it. Another example is a commuter rail line with a segment located beyond the nonattainment area boundary.

The purpose of the current policy is to allow CMAQ eligibility for projects which serve a designated area by being very close to the area and whose emission reductions primarily benefit such areas, so long as those projects meet all of the statutory eligibility criteria of 23 U.S.C. 149. The primary eligibility criterion is a reduction in transportation related emissions that will contribute to the attainment or maintenance of a NAAQS.

Eligibility for high speed rail projects has already been established under the above policy. Several States have explored the possibility of using CMAQ funds to support high speed rail projects outside of nonattainment or maintenance areas on the basis that they would have benefits within designated areas only if an entire corridor were funded, including portions outside of such areas.

The issue then is whether, and under what conditions, State DOTs should be permitted to use their States' CMAQ allocations to fund high speed rail improvements located outside of nonattainment or maintenance areas. To gather input from interested parties, the FHWA and the FTA published a request for comments at 65 FR 16997 on March 30, 2000.

Discussion of Comments

A total of 39 comments were received. Twenty-one commenters opposed expansion of eligibility and believed the existing policy should remain intact. There were 18 who supported it, either conditionally or fully. Those who supported changing the policy stated that emissions reductions are the most important part of CMAQ eligibility, and therefore projects that reduce emissions should proceed. Those who proposed conditional support for the expansion felt that such projects may be eligible, but should be held to a higher standard, or have funding limitations or a separate funding source.

A categorization of these comments is as follows: Seven metropolitan planning organizations (MPOs), five State DOTs, one State air agency, two cities, one private citizen and five associations opposed the expansion of existing policy. One State legislator, one MPO, three State DOTs, two railroads, one railroad development commission and five rail passenger associations supported changes. The five comments that expressed limited support, or support under certain conditions, were all from State DOTs.

The comments were generally thoughtful, and many raised excellent points. However, no comments were received that persuaded us that the current policy on eligibility was unsound. Several issues were raised, however, that do merit further discussion and thereby provide an opportunity for further clarification and amplification of our current interpretation of the factors that serve as the basis for our position. The full set of comments can be reviewed by accessing: *http://dms.dot.gov*. The docket number is FHWA–2000–6757.

Those who did not support the expanded eligibility argued that it conflicts with legislative language and intent that they claim precludes funding for projects outside of nonattainment and maintenance areas. One group commented that ''Congress * * * (in) * * * TEA–21 specifically directed CMAQ allocations to be used by States to fund projects that reduce transportation-related emissions in air quality nonattainment areas. * * * proposal(s) to fund projects outside of these areas are not in compliance with the law's intent * * *.''

Other commenters took issue with the flexibility that currently exists in the guidance. Several of those opposed to expansion expressed concern that even allowing eligibility for projects in close proximity to the nonattainment or maintenance area does not go far enough in ensuring that air pollution will be reduced in the area. One stated, ''The ability to demonstrate air quality benefits for high speed rail projects outside the nonattainment areas would be problematic at best.''

Overall, supporters of expanded eligibility were of the opinion that this new high speed rail service would benefit air quality in both nonattainment/maintenance areas as well as attainment areas. Nine of the respondents commented that there would be positive emissions benefits in the nonattainment and maintenance areas regardless of whether the high speed rail service passed through attainment areas. Responses included statements such as ''all projects that contribute to decreased pollution and congestion should be considered * * *'' and ''[T]he critical factor should not be where the funds are spent, but rather how much congestion and pollution will be prevented in nonattainment areas * * *.''

There were also a number of respondents whose support was limited. These respondents favored the idea of CMAQ flexibility for rail projects, but through additional eligibility requirements, new regulations, or major changes to the program for which statutory authority does not exist. Many of these proposed changes are infeasible under current legislation. However, a number of these respondents provided information that may help to address

[1] States which have no designated nonattainment or maintenance areas receive a minimum apportionment of one-half of one percent of the national CMAQ funding. This money may be spent anywhere in the State for any project which would be eligible for funding under the Surface Transportation Program (STP) as well as for any CMAQ purpose. States whose apportionments based on their nonattainment and maintenance area populations are less than one-half of one percent receive additional funds to make up to the one-half percent minimum. These additional funds may also be spent anywhere in the State for any STP or CMAQ eligible purpose.

[2] Specifically, 23 U.S.C. 149(b) provides: ''ELIGIBLE PROJECTS.—Except as provided in subsection (c), a State may obligate funds apportioned to it under section 104(b)(2) for the congestion mitigation and air quality improvement program only for a transportation project or program if the project or program is for an area in the State that is or was designated as a nonattainment area for ozone, carbon monoxide, or particulate matter under section 107(d) of the Clean Air Act (42 U.S.C. 7407(d)) and classified pursuant to section 181(a), 186(a), 188(a), or 188(b) of the Clean Air Act (42 U.S.C. 7511(a), 7512(a), 7513(a), or 7513(b)) or is or was designated as a nonattainment area under such section 107(d) after December 31, 1997, and * * *.''

the issues of what it means for projects to be in close proximity to and primarily benefitting the nonattainment area. For example, it was suggested that ''close proximity should be defined as a government defined jurisdiction that shares a common border with the nonattainment or maintenance area.''

In relation to the demonstration of benefits primarily realized (or occurring) within the designated areas, it was offered that ''Projects must demonstrate air quality benefits primarily within the nonattainment area or maintenance area boundary [and] a performance standard is important. To be eligible for funding, at least 75 percent of the project's emission reduction should accrue in the nonattainment or maintenance area.'' Apparently with respect to defining the criterion that the project primarily serve the area, it was also suggested that the * * * decision * * * on whether a project provides enough emission reduction potential to warrant receipt of a CMAQ allocation should be decided at the State and local level.''

The FHWA and the FTA believe that the commenter is right that a preponderance of the emissions reduction benefit should accrue within such areas for a project to be eligible. However, no commenter provided a legislative or clear scientific basis to assign any specific share of emission reduction benefits as a threshold for determining eligibility. The threshold could just as easily be set at 85 or 95 percent to meet the statutory requirements. Further, the agencies believe that while State and local entities, including the MPOs, are in a good position to weigh the emissions and air quality benefits of an activity proposed for CMAQ funds, a final determination must rest with the FHWA and the FTA.

The FHWA and the FTA continue to believe that there are instances where the project sponsor can demonstrate benefits primarily for a nonattainment or maintenance area despite the fact that the project or program may not be physically located entirely within the boundary area, but that this demonstration becomes increasingly difficult the farther the project, program or service extends beyond the area's boundaries. We have retained ''close proximity'' as part of the eligibility standard because, whatever else may be argued about the difficulty of accurately quantifying benefits, they do diminish with distance.

There is no disagreement among the commenters that the primary purpose of the CMAQ program is to fund transportation improvements within nonattainment and maintenance areas that reduce emissions. The FHWA and the FTA believe that this will continue to be the general case for CMAQ eligibility. The FHWA and the FTA have administered the program under the general policy that CMAQ funds should be used for projects located in nonattainment and maintenance areas.

The current policy, set forth in the agencies' program guidance document, also allows certain circumstances under which projects can be determined to be eligible for CMAQ funding even though they are not located entirely within designated nonattainment or maintenance areas. Those exceptional circumstances are when a project is located in close proximity to designated areas and the benefits will be realized primarily within the nonattainment or maintenance area boundaries. For example, the rail proposals found eligible thus far have both begun and ended in nonattainment or maintenance areas, have been for the most part located in designated areas, and have benefits which are primarily realized within the boundaries of the designated areas.

As mentioned above, the FHWA and the FTA support flexibility and keeping the decisionmaking as close to the affected area as possible. Standards to define ''close proximity'' are difficult to establish without being arbitrary. Defining a specific distance from the designated boundary could artificially establish a second boundary. This new ''boundary'' could lead to another round of proximity questions. To avoid this, we believe that maintaining our policy of allowing emission reducing projects to go forward without specifically defining close proximity is the more prudent course. Of course, in the absence of an exact limit, the ''burden of proof'' falls on the project sponsor. It is up to the project sponsor to demonstrate that its emission reductions primarily benefit the nonattainment or maintenance area, a task clearly aided by showing a close proximity to the area.

We believe that the preponderance of emission reduction benefits must accrue to such areas, in comparison with other areas served, to demonstrate that the project will primarily benefit the nonattainment or maintenance area. To that end we believe that the project sponsor must demonstrate the project's emission reduction benefits will primarily be realized within the nonattainment and maintenance area boundaries to be eligible.

High Speed Rail Projects

High speed rail service, in general, is a passenger transportation mode that links well-populated metropolitan areas that could be as much as 100 to 500 miles apart. It usually has few station stops since more would increase travel times. The metropolitan areas that such links serve may, or may not, be in nonattainment or maintenance areas.

A project to improve a high speed rail service which is located within a nonattainment or maintenance area would be eligible for CMAQ if it reduces emissions and meets the other eligibility criteria and title 23, U.S. Code, requirements. Similarly, a high speed rail service may link two or more nonattainment (or maintenance) areas. If the project creates emission reductions in the nonattainment or maintenance areas, it may be eligible for CMAQ.

Using CMAQ funds, the FHWA has funded rail projects that primarily serve nonattainment or maintenance areas and whose benefits occur primarily within those areas. CMAQ funds have already been used for a variety of freight and passenger rail services in New York, Ohio, Maine, and Illinois.

One such project is the Empire Corridor of New York State. CMAQ funds are being provided to support rail improvements necessary for high speed rail in five counties between New York City and Schenectady. Four of those counties are designated as maintenance areas for the 1-hour ozone standard. One county, in the middle of the project, is not designated.

The portion of the Empire Corridor that is being funded is approximately 160 miles long and connects the New York City nonattainment area with the Albany maintenance area. Various track improvements, double track additions, bridge work and station improvements are needed to complete a viable project, in addition to new train-sets that will run the entire length of the project. Approximately 25 miles of the track work will be in the one county that is not designated. That track begins and ends in designated areas and is in close proximity to a designated county just to the west of the county through which it runs. The project is not viable without the link through the undesignated county, and the emissions benefits to be obtained within the designated areas by providing a quick alternative to automobile travel cannot be realized without this important portion. Therefore, the entire length from New York City to Schenectady has been found to be eligible for CMAQ funding, including the link within the one county that is not designated.

Another proposal that was recently approved is to provide CMAQ support to a new rail service between Los Angeles and Las Vegas. The State of Nevada proposed to provide a relatively small portion of the total cost of this service using CMAQ funds. The eligibility determination was based on the particulate emission reductions to be obtained within the Las Vegas particulate matter nonattainment area.

Within Nevada, the project will begin in the Las Vegas nonattainment area and proceed southwesterly toward the California State line, about 30 miles away. Approximately half of that distance is within the designated nonattainment area; the remainder of the distance within Nevada is not designated. Within California, the entire remaining distance is designated nonattainment for particulate matter. The western part of the route, closer to Los Angeles is classified as a serious nonattainment area. Thus, only about 15 miles of the approximately 275 mile long project is outside of designated areas. And, the emission benefits related to moving people by train rather than by automobile can only be obtained by a continuous project, including the area not designated.

Policy Decision

The FHWA and the FTA believe that the current policy can serve the needs of those high speed rail projects that are eligible within the statutory authority of 23 U.S.C. 149. Under the current policy, rail projects can be funded if they (1) are located within, or in close proximity to, nonattainment or maintenance areas, (2) can demonstrate the projects' emission reductions are realized primarily within the designated areas, and (3) meet other criteria for CMAQ funding. There is no compelling need to modify the policy at this time. The determination that proposals for CMAQ funding meet these criteria should be made in close collaboration with State and local officials at transportation and air quality agencies, including the MPO, and the EPA, but the final determination of CMAQ eligibility rests with the FHWA and the FTA, as always.

Authority: 23 U.S.C. 149, 315; 49 CFR 1.48 and 1.51.

Issued on: January 9, 2002.

Mary E. Peters,

Administrator, Federal Highway Administration.

Jennifer L. Dorn,

Federal Transit Administrator.

[FR Doc. 02–1164 Filed 1–15–02; 8:45 am]

BILLING CODE 4910–22–P

DEPARTMENT OF TRANSPORTATION

Surface Transportation Board

[STB Finance Docket No. 34149]

Stillwater Central Railroad, Inc.—Acquisition Exemption—The Burlington Northern and Santa Fe Railway Company

Stillwater Central Railroad, Inc. (SCRR), a Class III rail carrier, has filed a verified notice of exemption under 49 CFR 1150.41 to acquire from The Burlington Northern and Santa Fe Railway Company and operate approximately 119.73 miles of rail line between milepost 549, at Wheatland, OK, and milepost 668.73, at Long, OK.

The transaction was scheduled to be consummated on or shortly after December 28, 2001.

If the notice contains false or misleading information, the exemption is void *ab initio.* Petitions to revoke the exemption under 49 U.S.C. 10502(d) may be filed at any time. The filing of a petition to revoke does not automatically stay the transaction.

An original and 10 copies of all pleadings, referring to STB Finance Docket No. 34149, must be filed with the Surface Transportation Board, Office of the Secretary, Case Control Unit, 1925 K Street, NW., Washington, DC 20423–0001. In addition, a copy of each pleading must be served on Karl Morell, Esq., BALL JANIK LLP, 1455 F Street, NW., Suite 225, Washington, DC 20005.

Board decisions and notices are available on our website at *www.stb.dot.gov.*

Decided: January 4, 2002.

By the Board, David M. Konschnik, Director, Office of Proceedings.

Vernon A. Williams,

Secretary.

[FR Doc. 02–766 Filed 1–15–02; 8:45 am]

BILLING CODE 4915–00–P

DEPARTMENT OF TRANSPORTATION

Surface Transportation Board

[STB Finance Docket No. 34121]

Craggy Mountain Line, Inc.—Acquisition and Operation Exemption—Norfolk Southern Railway Co.

Craggy Mountain Line, Inc. (CMLX), a noncarrier, has filed a verified notice of exemption under 49 CFR part 1150.31 to acquire and operate approximately 3.45 miles of rail line currently owned by Norfolk Southern Railway Company (NS). The line, known as the Asheville to Craggy Branch, is a portion of the former Southern Railroad located in Woodfin Township, Buncombe County, NC, and extends between the beginning Survey Station ACM, 17+63=0100 in Woodfin Township and the ending Survey Station 123+00 ''Asheville to Southern'' 17+97 in Woodfin Township. CMLX certifies that its projected annual revenues as a result of this transaction will not result in the creation of a Class I or Class II rail carrier, and further certifies that its projected annual revenues will not exceed $5 million.

The transaction was scheduled to be consummated on or after December 31, 2001.

If the verified notice contains false or misleading information, the exemption is void *ab initio.* Petitions to reopen the proceeding to revoke the exemption under 49 U.S.C. 10502(d) may be filed at any time. The filing of a petition to revoke will not automatically stay the transaction.

An original and 10 copies of all pleadings, referring to STB Finance Docket No. 34121, must be filed with the Surface Transportation Board, Office of the Secretary, Case Control Unit, 1925 K Street, NW., Washington, DC 20423–0001. In addition, a copy of each pleading must be served on David R. Payne, P.A., 218 East Chestnut St., Asheville, NC 28801.

Boards decisions and notices are available on our Web site at ''*www.stb.dot.gov.*''

Decided: January 9, 2002.

By the Board, David M. Konschnik, Director, Office of Proceedings.

Vernon A. Williams,

Secretary.

[FR Doc. 02–968 Filed 1–15–02; 8:45 am]

BILLING CODE 4915–00–P

DEPARTMENT OF TRANSPORTATION

Bureau of Transportation Statistics

Agency Information Collection; Activity Under OMB Review; Report of Financial and Operating Statistics for Small Aircraft Operators

AGENCY: Bureau of Transportation Statistics (BTS), DOT.

ACTION: Notice.

SUMMARY: In compliance with the Paperwork Reduction Act of 1995, Public Law 104–13, the Bureau of Transportation Statistics invites the general public, industry and other governmental parties to comment on the continuing need for and usefulness of BTS collecting financial, traffic and operating statistics from small

certificated and commuter air carriers. Small certificated air carriers (operate aircraft with 60 seats or less or with 18,000 pounds of payload capacity or less) currently must file the five quarterly schedules listed below:

A–1 *Report of Flight and Traffic Statistics in Scheduled Passenger Operations,*

E–1 *Report of Nonscheduled Passenger Enplanements by Small Certificated Air Carriers,*

F–1 *Report of Financial Data,*

F–2 *Report of Aircraft Operating Expenses and Related Statistics, and*

T–1 *Report of Revenue Traffic by On-Line Origin and Destination.*

Commuter air carriers must file the three quarterly schedules listed below:

A–1 *Report of Flight and Traffic Statistics in Scheduled Passenger Operations,*

F–1 *Report of Financial Data,*

T–1 *Report of Revenue Traffic by On-Line Origin and Destination.*

On August 28, 2001, BTS published in the **Federal Register** (66 FR 45201) a notice of proposed rulemaking which recommends that small certificated and commuter air carriers report their traffic under the T–100 reporting system. If this proposal becomes a final rule, Form 298–C, Schedules A–1, E–1 and T–1 would be eliminated.

Commenters should address whether BTS accurately estimated the reporting burden and if there are other ways to enhance the quality, utility, and clarity of the information collected.

DATES: Written comments should be submitted by March 18, 2002.

ADDRESSES: Comments should be directed to: Office of Airline Information, K–25, Room 4125, Bureau of Transportation Statistics, 400 Seventh Street, SW., Washington, DC 20590–0001, fax No. 366–3383 or e-mail *bernard.stankus@bts.gov.*

Comments: Comments should identify the OMB # 2138–0009. Persons wishing the Department to acknowledge receipt of their comments must submit with those comments a self-addressed stamped postcard on which the following statement is made: Comments on OMB # 2138–0009. The postcard will be date/time stamped and returned.

FOR FURTHER INFORMATION CONTACT: Bernie Stankus, Office of Airline Information, K–25, Room 4125, Bureau of Transportation Statistics, 400 Seventh Street, SW., Washington, DC 20590–0001, (202) 366–4387.

SUPPLEMENTARY INFORMATION:

OMB Approval No.: 2138–0009.

Title: Report of Financial and Operating Statistics for Small Aircraft Operators.

Form No.: BTS Form 298–C.

Type Of Review: Extension of a currently approved collection for the financial data. The traffic data will be included under OMB Approval number 2138–0040.

Respondents: Small certificated and commuter air carriers.

Number of Respondents: 90.

Estimated Time per Response: 4 hours per commuter carrier; 12 hours per small certificated carrier.

Total Annual Burden: 2,880 hours.

Needs and Uses: Program uses for Form 298–C financial data are as follows:

Mail Rates

The Department of Transportation sets and updates the Intra-Alaska Bush mail rates based on carrier aircraft operating expense, traffic, and operational data. Form 298–C cost data, especially fuel costs, terminal expenses, and line haul expenses are used in arriving at rate levels. DOT revises the established rates based on the percentage of unit cost changes in the carriers' operations. These updating procedures have resulted in the carriers receiving rates of compensation that more closely parallel their costs of providing mail service and contribute to the carriers' economic well-being.

Essential Air Service

DOT often has to select a carrier to provide a community's essential air service. The selection criteria include historic presence in the community, reliability of service, financial stability and cost structure of the air carrier.

Carrier Fitness

Fitness determinations are made for both new entrants and established U.S. domestic carriers proposing a substantial change in operations. A portion of these applications consists of an operating plan for the first year (14 CFR part 204) and an associated projection of revenues and expenses. The carrier's operating costs, included in these projections, are compared against the cost data in Form 298–C for a carrier or carriers with the same aircraft type and similar operating characteristics. Such a review validates the reasonableness of the carrier's operating plan.

The quarterly financial submissions by commuter and small certificated air carriers are used in determining each carrier's continuing fitness to operate. Section 41738 of Title 49 of the United States Code requires DOT to find all commuter and small certificated air carriers fit, willing, and able to conduct passenger service as a prerequisite to providing such service to an eligible essential air service point. In making a fitness determination, DOT reviews three areas of a carrier's operation: (1) The qualifications of its management team, (2) its disposition to comply with laws and regulations, and (3) its financial posture. DOT must determine whether or not a carrier has sufficient financial resources to conduct its operations without imposing undue risk on the traveling public. Moreover, once a carrier begins conducting flight operations, DOT is required to monitor its continuing fitness.

Senior DOT officials must be kept fully informed and advised of all current and developing economic issues affecting the airline industry. In preparing financial condition reports or status reports on a particular airline, financial and traffic data are analyzed. Briefing papers prepared for senior DOT officials may use the same information.

Air Transportation Safety and System Stabilization Act

DOT is using financial data reported by small certificated and commuter air carriers to establish benchmarks to assess the reasonableness of air carrier claims under the Stabilization Act.

Donald W. Bright,

Assistant Director, Airline Information, Bureau of Transportation Statistics.

[FR Doc. 02–1157 Filed 1–15–02; 8:45 am]

BILLING CODE 4910–FE–P

DEPARTMENT OF TRANSPORTATION

Bureau of Transportation Statistics

Agency Information Collection; Activity Under OMB Review; Report of Financial and Operating Statistics for Large Certificated Air Carriers

AGENCY: Bureau of Transportation Statistics (BTS), DOT.

ACTION: Notice.

SUMMARY: In compliance with the Paperwork Reduction Act of 1995, Public Law 104–13, the Bureau of Transportation Statistics invites the general public, industry and other governmental parties to comment on the continuing need for and usefulness of the BTS Form 41. Comments are requested concerning whether (a) the continuation of Form 41 is necessary for DOT to carry out its mission of promoting air transportation; (b) BTS accurately estimated the reporting burden; (c) there are other ways to enhance the quality, use and clarity of the data collected; and (d) there are ways to minimize reporting burden,

including the use of automated collection techniques or other forms of information technology.

DATES: Written comments should be submitted by March 18, 2002.

ADDRESSES: Comments should be directed to: Office of Airline Information, K–25, Room 4125, Bureau of Transportation Statistics, 400 Seventh Street, SW., Washington, DC 20590–0001, fax No. (202) 366–3383 or e-mail *bernard.stankus@bts.gov.*

Comments: Comments should identify the OMB # 2138–0013. Persons wishing the Department to acknowledge receipt of their comments must submit with those comments a self-addressed stamped postcard on which the following statement is made: Comments on OMB # 2138–0013. The postcard will be date/time stamped and returned.

FOR FURTHER INFORMATION CONTACT: Bernie Stankus, Office of Airline Information, K–25, Room 4125, Bureau of Transportation Statistics, 400 Seventh Street, SW., Washington, DC 20590–0001, (202) 366–4387.

SUPPLEMENTARY INFORMATION:

OMB Approval No.: 2138–0013.

Title: Report of Financial and Operating Statistics for Large Certificated Air Carriers.

Form No.: BTS Form 41.

Type Of Review: Extension of a currently approved collection.

Respondents: Large certificated air carriers.

Number of Respondents: 75.

Estimated Time per Response: 4 hours per schedule, an average carrier may submit 90 schedules in one year.

Total Annual Burden: 27,000 hours.

Needs and Uses: Program uses for Form 41 data are as follows:

Mail Rates

The Department of Transportation sets and updates the international and mainline Alaska mail rates based on carrier aircraft operating expense, traffic and operational data. Form 41 cost data, especially fuel costs, terminal expenses, and line haul expenses are used in arriving at rate levels. DOT revises the established rates based on the percentage of unit cost changes in the carriers' operations. These updating procedures have resulted in the carriers receiving rates of compensation that more closely parallel their costs of providing mail service and contribute to the carriers' economic well-being.

Submission of U.S. Carrier Data to ICAO

As a party to the Convention on International Civil Aviation, the United States is obligated to provide the International Civil Aviation Organization with financial and statistical data on operations of U.S. air carriers. Over 99 percent of the data filed with ICAO is extracted from the carriers' Form 41 reports.

Standard Foreign Fare and Rate Levels

DOT uses Form 41 cost data to calculate the Standard Foreign Fare Level (SFFL) for passengers and the Standard Foreign Rate Level (SFRL) for freight. Any international fare or rate set below this fare level are automatically approved. Separate passenger fare and rate levels are established for Canadian, Atlantic, Latin America, and Pacific areas. In markets where liberal bilateral or multilateral pricing agreements provide for more competitive open market pricing, such agreements may take precedence over the SFFL and SFRL.

Carrier Fitness

Fitness determinations are made for both new entrants and established U.S. domestic carriers proposing a substantial change in operations. A portion of these applications consists of an operating plan for the first year (14 CFR part 204) and an associated projection of revenues and expenses. The carrier's operating costs, included in these projections, are compared against the cost data in Form 41 for a carrier or carriers with the same aircraft type and similar operating characteristics. Such a review validates the reasonableness of the carrier's operating plan.

Form 41 reports, particularly balance sheet reports and cash flow statements play a major role in the identification of vulnerable carriers. Data comparisons are made between current and past periods in order to assess the current financial position of the carrier. Financial trend lines are extended into the future to analyze the continued viability of the carrier. DOT reviews three areas of a carrier's operation: (1) The qualifications of its management team, (2) its disposition to comply with laws and regulations, and (3) its financial posture. DOT must determine whether or not a carrier has sufficient financial resources to conduct its operations without imposing undue risk on the traveling public. Moreover, once a carrier is operating, DOT is required to monitor its continuing fitness.

Senior DOT officials must be kept fully informed as to all current and developing economic issues affecting the airline industry. In preparing financial conditions reports or status reports on a particular airline, financial and traffic data are analyzed. Briefing papers may use the same information.

War Air Service Program (Emergency Preparedness)

Under the War Air Service Program (WASP), FAA develops an official airline guide to establish air carrier boarding priorities in the event of a national emergency. The inventory of aircraft available for WASP equals the total aircraft fleet operated by certificated air carriers less the number of the largest wide-body aircraft that are allocated to the Civil Reserve Aircraft Fleet Program. Data on air carrier aircraft inventories, plus interim updates of acquisitions and retirements are used to assess the air transportation capabilities of the U.S. airline industry. This assessment is used in developing plans for emergency utilization of U.S. airline industry aircraft and resources in the event of a national emergency and/or mobilization.

Air Transportation Safety and System Stabilization Act

DOT is using Form 41 financial data to establish benchmarks to assess the reasonableness of air carrier claims under the Stabilization Act.

Donald W. Bright,

Assistant Director, Airline Information, Bureau of Transportation Statistics.

[FR Doc. 02–1158 Filed 1–15–02; 8:45 am]

BILLING CODE 4910–FE–P

DEPARTMENT OF THE TREASURY

Internal Revenue Service

Proposed Collection; Comment Request for Form 2553

AGENCY: Internal Revenue Service (IRS), Treasury.

ACTION: Notice and request for comments.

SUMMARY: The Department of the Treasury, as part of its continuing effort to reduce paperwork and respondent burden, invites the general public and other Federal agencies to take this opportunity to comment on proposed and/or continuing information collections, as required by the Paperwork Reduction Act of 1995, Public Law 104–13 (44 U.S.C. 3506(c)(2)(A)). Currently, the IRS is soliciting comments concerning Form 2553, Election by a Small Business Corporation.

DATES: Written comments should be received on or before March 18, 2002, to be assured of consideration.

ADDRESSES: Direct all written comments to George Freeland, Internal Revenue Service, room 5575, 1111 Constitution Avenue NW., Washington, DC 20224.

FOR FURTHER INFORMATION CONTACT: Requests for additional information or copies of the form and instructions should be directed to Allan Hopkins, (202) 622–6665, Internal Revenue Service, room 5244, 1111 Constitution Avenue NW., Washington, DC 20224.

SUPPLEMENTARY INFORMATION:

Title: Election by a Small Business Corporation.

OMB Number: 1545–0146.

Form Number: 2553.

Abstract: Form 2553 is filed by a qualifying corporation to elect to be an ''S'' Corporation as defined in Internal Revenue Code section 1361. The information obtained is necessary to determine if the election should be accepted by the IRS. When the election is accepted, the qualifying corporation is classified as an ''S'' Corporation and the corporation's income is taxed to the shareholders of the corporation.

Current Actions: There are no changes being made to the form at this time.

Type of Review: Extension of a currently approved collection.

Affected Public: Businesses and Farms.

Estimated Number of Respondents: 500,000.

Estimated Time Per Respondent: 15 hrs., 29 min.

Estimated Total Annual Burden Hours: 7,745,000.

The following paragraph applies to all of the collections of information covered by this notice:

An agency may not conduct or sponsor, and a person is not required to respond to, a collection of information unless the collection of information displays a valid OMB control number. Books or records relating to a collection of information must be retained as long as their contents may become material in the administration of any internal revenue law. Generally, tax returns and tax return information are confidential, as required by 26 U.S.C. 6103.

Request for Comments

Comments submitted in response to this notice will be summarized and/or included in the request for OMB approval. All comments will become a matter of public record. Comments are invited on: (a) Whether the collection of information is necessary for the proper performance of the functions of the agency, including whether the information shall have practical utility; (b) the accuracy of the agency's estimate of the burden of the collection of information; (c) ways to enhance the quality, utility, and clarity of the information to be collected; (d) ways to minimize the burden of the collection of information on respondents, including through the use of automated collection techniques or other forms of information technology; and (e) estimates of capital or start-up costs and costs of operation, maintenance, and purchase of services to provide information.

Approved: January 5, 2002.

George Freeland,

IRS Reports Clearance Officer.

[FR Doc. 02–896 Filed 1–15–02; 8:45 am]

BILLING CODE 4830–01–P

DEPARTMENT OF THE TREASURY

United States Mint

Proposed Collection; Comment Request

ACTION: Notice and request for comments.

SUMMARY: The Department of the Treasury, as part of its continuing effort to reduce paperwork and respondent burden, invites the general public and other Federal agencies to take this opportunity to comment on proposed and/or continuing information collections, as required by the Paperwork Reduction Act of 1995, Public Law 104–13 (44 U.S.C. 3506(c)(2)(A)). Currently, the United States Mint within the Department of the Treasury is soliciting comments concerning the United States Mint Generic Clearance Package for OMB.

Written comments should be received on or before March 18, 2002, to be assured of consideration. Direct all written comments to Philip Neisser, Acting Director, Office of Business Alignment, United States Mint, 801 9th Street, NW., Washington, DC 20220; 202.772.7323; *Pneisser@usmint.treas.gov*.

Requests for additional information or copies of the form(s) and instructions should be directed to Melissa Ferring, Communications Specialist, Office of Business Alignment, United States Mint, 801 9th Street, NW., Washington, DC 20220; 202.772.7320; *Mferring@usmint.treas.gov*.

SUPPLEMENTARY INFORMATION:

Title: United States Mint Generic Clearance Package.

OMB Number: 1525–0012.

Abstract: This is a request for a reinstatement of a three year Generic Clearance to conduct customer satisfaction surveys for the United States Mint.

Current Actions: The United States Mint conducts customer service surveys and focus groups to determine the level of satisfaction from the Mint customers. These actions allow the Mint access to the needs and desires of customers for future products and more efficient, economical services. The United States Mint currently has a Generic Clearance with OMB which allows expedition of the customer satisfaction surveys and focus groups. The United States Mint is requesting another three year reinstatement of this Generic Clearance.

Type of Review: This is a Reinstatement submission, with the only changes being that the necessary survey requests are far fewer than in the past three years.

Affected Public: The affected public includes the serious and casual numismatic collectors, dealers and people in the numismatic business and the general public or one time only customers.

Estimated Number of Respondents: The estimated number of respondents for the next three years is 10,390. With a total estimated number of burden hours of 4,659.

Estimated Total Annual Burden Hours: The estimated number of annual burden hours is 1,553.

Request for Comments

Comments submitted in response to this notice will be summarized and/or included in the request for OMB approval. All comments will become a matter of public record. Comments are invited on: (a) Whether the collection of information is necessary for the proper performance of the functions of the agency, including whether the information shall have practical utility; (b) the accuracy of the agency's estimate of the burden of the collection of information; (c) ways to enhance the quality, utility, and clarity of the information to be collected; (d) ways to minimize the burden of the collection of information on respondents, including through the use of automated collection techniques or other forms of information technology; and (e) estimates of capital or start-up costs and costs of operation, maintenance, and purchase of services to provide information.

Dated: January 4, 2002.

Philip Neisser,

Acting Director, Office of Business Alignment, United States Mint.

[FR Doc. 02–1072 Filed 1–15–02; 8:45 am]

BILLING CODE 4810–37–M

Notices

Federal Register
Vol. 67, No. 11
Wednesday, January 16, 2002

This section of the FEDERAL REGISTER contains documents other than rules or proposed rules that are applicable to the public. Notices of hearings and investigations, committee meetings, agency decisions and rulings, delegations of authority, filing of petitions and applications and agency statements of organization and functions are examples of documents appearing in this section.

AFRICAN DEVELOPMENT FOUNDATION

Sunshine Act Meeting; Board of Directors

TIME: 11:00 am–2:30 pm.

PLACE: ADF Headquarters.

DATE: Tuesday, January 29, 2002.

STATUS: Open.

Agenda

11:00 am–11:30 am—Chairman's Report
11:30 am–12:30 pm—President's Report
12:30 pm–1:00 pm—Lunch
1:00 pm–2:30 pm—Executive Session (Closed)
2:30 pm—Adjournment

If you have any questions or comments, please direct them to Doris Martin, General Counsel, who can be reached at (202) 673–3916.

Nathaniel Fields,
President.

[FR Doc. 02–1281 Filed 1–14–02; 3:50 pm]

BILLING CODE 6117–01–P

DEPARTMENT OF COMMERCE

Submission for OMB Review; Comment Request

The Department of Commerce has submitted to the Office of Management and Budget (OMB) for clearance the following proposal for collection of information under the provisions of the Paperwork Reduction Act (44 U.S.C. chapter 35).

Agency: National Telecommunications and Information Administration (NTIA).

Title: Performance Reporting System (PRS) for the Technology Opportunities Program (TOP).

Form Number(s): None.

OMB Approval Number: 0660–0015.

Type of Request: Regular Submission.

Burden Hours: 1492.

Number of Respondents: 50.

Average Hours Per Response: Start-Up Documentation—20 hours; Progress Reports—16 hours; Annual Report—0.5 hours; Final Closeout Report—20 hours.

Needs and Uses: The purpose of the Technology Opportunities Program (TOP), formerly the Telecommunications and Information Infrastructure Assistance Program (TIIAP), is to promote the widespread and efficient use of advanced telecommunications services in the public and non-profit sectors to serve America's communities through the award of matching grants.

Affected Public: State, local, or tribal government, and not-for-profit institutions.

Frequency: Quarterly, annually, and final report.

Respondent's Obligation: Required to obtain or retain benefits.

OMB Desk Officer: David Rostker, (202) 395–3897.

Copies of the above information collection proposal can be obtained by calling or writing Madeleine Clayton, Departmental Paperwork Clearance Officer, (202) 482–3129, Department of Commerce, Room 6086, 14th and Constitution Avenue, NW, Washington, DC 20230 (or via the Internet at MClayton@doc.gov.

Written comments and recommendations for the proposed information collection should be sent within 30 days of publication of this notice to David Rostker, OMB Desk Officer, Room 10202, New Executive Office Building, Washington, DC 20503.

Dated: January 10, 2002.

Madeleine Clayton,
Departmental Paperwork Clearance Officer, Office of the Chief Information Officer.

[FR Doc. 02–1032 Filed 1–15–02; 8:45 am]

BILLING CODE 3510–60–P

DEPARTMENT OF COMMERCE

Submission for OMB Review; Comment Request

DOC has submitted to the Office of Management and Budget (OMB) for clearance the following proposal for collection of information under the provisions of the Paperwork Reduction Act (44 U.S.C. chapter 35).

Agency: U.S. Census Bureau.

Title: 2002 Vehicle Inventory and Use Survey (VIUS).

Form Number(s): TC–9501, TC–9502.

Agency Approval Number: None.

Type of Request: New collection.

Burden: 85,170.

Number of Respondents: 135,300.

Avg Hours Per Response: 38 minutes.

Needs and Uses: The Census Bureau requests clearance of the forms it will use to conduct the 2002 Vehicle Inventory and Use Survey (VIUS) as part of the 2002 Economic Census. The 2002 VIUS will collect data to measure the physical and operational characteristics of trucks from a sample of approximately 135,300 trucks. These trucks are selected from more than 76 million private and commercial trucks registered on file with motor vehicle departments in the 50 states and the District of Columbia. The Census Bureau will collect the data for the sampled trucks from a questionnaire mailed to truck owners. We will publish physical and operational vehicular characteristics estimates for each state, the District of Columbia, and the United States.

The VIUS is the only comprehensive source of information on the physical and operational characteristics of the Nation's truck population. The need for truck industry data continues to be increasingly important with the passage of the Motor Carrier Act of 1980, the Clean Air Act amendments of 1990, and the Hours-of-Service Regulations proposal of 2000. The VIUS provides unique, essential information for government, business, and academia. The U.S. Department of Transportation, State Departments of Transportation, and transportation consultants compliment VIUS microdata as extremely useful and flexible to meet constantly changing requests that cannot be met with predetermined tabular publications. The microdata file enables them to cross-tabulate data to meet their needs. Federal, state, and local transportation agencies use information from the VIUS for the analysis of safety issues, proposed investments in new roads and technology, truck size and weight issues, user fees, cost allocation, energy and environmental constraints, hazardous materials transport, and other aspects of the Federal-aid highway program. The Federal government uses information from the VIUS as an important part of the framework for: (1) The national investment and personal consumption expenditures component

of the gross domestic product (GDP), (2) input-output tables, (3) economic development evaluation, (4) maintenance of vital statistics for prediction of future economic and transportation trends, (5) logistical requirements, (6) Metropolitan Planning Organization (MPO) transportation development requirements, and (7) regulatory impact analysis. Business and academia use information from the VIUS to assess intermodal use, conduct market studies and evaluate market strategies, assess the utility and cost of certain types of equipment, and calculate the longevity of products. VIUS information also is used to determine fuel demands and needs for fuel efficiency, to produce trade publication articles and special data arrays, and to assess the effects of deregulation on the restructuring of the transportation industries.

Affected Public: Individuals or households; Businesses or other for profit; Not-for-profit institutions; Farms.

Frequency: One time.

Respondent's Obligation: Mandatory.

Legal Authority: Title 13 U.S.C., section 131.

OMB Desk Officer: Susan Schechter, (202) 395–5103.

Copies of the above information collection proposal can be obtained by calling or writing Madeleine Clayton, Departmental Paperwork Clearance Officer, (202) 482–3129, Department of Commerce, room 6086, 14th and Constitution Avenue, NW., Washington, DC 20230 (or via the Internet at *mclayton@doc.gov*).

Written comments and recommendations for the proposed information collection should be sent within 30 days of publication of this notice to Susan Schechter, OMB Desk Officer, room 10201, New Executive Office Building, Washington, DC 20503.

Dated: January 10, 2002.

Madeleine Clayton,

Departmental Paperwork Clearance Officer, Office of the Chief Information Officer.

[FR Doc. 02–1035 Filed 1–15–02; 8:45 am]

BILLING CODE 3510–07–P

DEPARTMENT OF COMMERCE

Submission for OMB Review; Comment Request

DOC has submitted to the Office of Management and Budget (OMB) for clearance the following proposal for collection of information under the provisions of the Paperwork Reduction Act (44 U.S.C. chapter 35).

Agency: U.S. Census Bureau.

Title: 2002 Survey of Program Dynamics.

Form Number(s): SPD–22005, SPD–222105(L), SPD–22107(L), SPD–22103(L), SPD–22113(L).

Agency Approval Number: 0607–0838.

Type of Request: Revision of a currently approved collection.

Burden: 25,138 hours.

Number of Respondents: 41,990.

Avg Hours Per Response: 36 minutes.

Needs and Uses: The Census Bureau seeks OMB approval to conduct the 2002 Survey of Program Dynamics (SPD), the final data collection for this annual survey which began in 1997. The SPD provides the basis for an overall evaluation of how well welfare reforms are achieving the aims of the Administration and the Congress and meeting the needs of the American people. This survey simultaneously measures the important features of the full range of welfare programs, including programs that are being reformed and those that are unchanged, and the full range of other important social, economic, demographic, and family changes that will facilitate or limit the effectiveness of the reforms.

The SPD is a longitudinal study that follows a subset of the respondents from the 1992 and 1993 panels of the Survey of Income and Program Participation (SIPP). The SPD was first implemented in the spring of 1997 with a bridge survey that provided a link to baseline data for the period prior to the implementation of welfare reforms. The first full-scale SPD was conducted in 1998. The data gathered for the 10-year period (1992–2002) will aid in assessing short- to medium-term consequences of outcomes of the welfare legislation.

The 2002 SPD will exclude the self-administered questionnaire (SAQ) which we administered to 12- to 17-year-olds during the 2001 SPD, and will include questions on the extended measures of child well-being, last asked during the 1999 data collection. Due to cost constraints, the sample for the 2002 SPD will be reduced by approximately 30 percent to 20,000 households.

The 2002 SPD will be conducted by our interviewing staff using a computer-assisted interviewing instrument on laptops during personal and telephone interviews. As in previous years, we will offer monetary incentives to select groups of respondents in order to maintain and improve response rates.

Affected Public: Individuals or households.

Frequency: Annually.

Respondent's Obligation: Voluntary.

Legal Authority: Title 42 U.S.C., section 614.

OMB Desk Officer: Susan Schechter, (202) 395–5103.

Copies of the above information collection proposal can be obtained by calling or writing Madeleine Clayton, Departmental Paperwork Clearance Officer, (202) 482–3129, Department of Commerce, room 6086, 14th and Constitution Avenue, NW, Washington, DC 20230 (or via the Internet at *mclayton@doc.gov*).

Written comments and recommendations for the proposed information collection should be sent within 30 days of publication of this notice to Susan Schechter, OMB Desk Officer, room 10201, New Executive Office Building, Washington, DC 20503.

Dated: January 10, 2002.

Madeleine Clayton,

Departmental Paperwork Clearance Officer, Office of the Chief Information Officer.

[FR Doc. 02–1036 Filed 1–15–02; 8:45 am]

BILLING CODE 3510–07–P

DEPARTMENT OF COMMERCE

Submission for OMB Review; Comment Request

DOC has submitted to the Office of Management and Budget (OMB) for clearance the following proposal for collection of information under the provisions of the Paperwork Reduction Act (44 U.S.C. chapter 35).

Agency: U.S. Census Bureau.

Title: Survey of Building and Zoning Permit Systems.

Form Number(s): C–411.

Agency Approval Number: 0607–0350.

Type of Request: Reinstatement, with change, of an expired collection.

Burden: 500 hours.

Number of Respondents: 2,000.

Avg Hours Per Response: 15 minutes.

Needs and Uses: The Census Bureau produces statistics used to monitor activity in the large and dynamic construction industry. These statistics help state and local governments and the Federal Government, as well as private industry, to analyze this important sector of the economy. The accuracy of the Census Bureau statistics regarding the amount of construction authorized depends on data supplied by building and zoning officials throughout the country. The Census Bureau uses Form C–411, ''Survey of Building and Zoning Permits,'' to obtain information from state and local building permit officials needed for updating the universe of permit-issuing places from which samples for the Report of Privately-Owned Residential Building or Zoning Permits Issued (also known as

the Building Permits Survey (BPS)), and the Survey of Housing Starts, Sales, and Completions (also known as Survey of Construction (SOC)) are selected. The questions pertain to the legal requirements for issuing building or zoning permits in the local jurisdictions. Information is obtained on such items as geographic coverage and types of construction for which permits are issued. The form is sent to jurisdictions when the Census Bureau has reason to believe that a new permit system has been established or an existing one has changed.

We are requesting a reinstatement of the Form C–411 which has remained unused since its expiration earlier this year. We are requesting revisions to the form to streamline the collection and because of changing data needs.

Affected Public: State, local, or Tribal government.

Frequency: On occasion.

Respondent's Obligation: Voluntary.

Legal Authority: Title 13 U.S.C., sections 8(b), 9(b), 161, and 182; Title 15 U.S.C., section 1525.

OMB Desk Officer: Susan Schechter, (202) 395–5103.

Copies of the above information collection proposal can be obtained by calling or writing Madeleine Clayton, Departmental Paperwork Clearance Officer, (202) 482–3129, Department of Commerce, room 6086, 14th and Constitution Avenue, NW, Washington, DC 20230 (or via the Internet at *mclayton@doc.gov*).

Written comments and recommendations for the proposed information collection should be sent within 30 days of publication of this notice to Susan Schechter, OMB Desk Officer, room 10201, New Executive Office Building, Washington, DC 20503.

Dated: January 10, 2002.

Madeleine Clayton,

Departmental Paperwork Clearance Officer, Office of the Chief Information Officer.

[FR Doc. 02–1037 Filed 1–15–02; 8:45 am]

BILLING CODE 3510–07–P

DEPARTMENT OF COMMERCE

Submission for OMB Review; Comment Request

DOC has submitted to the Office of Management and Budget (OMB) for clearance the following proposal for collection of information under the provisions of the Paperwork Reduction Act of 1995, Public Law 104–13.

Bureau: International Trade Administration.

Title: Overseas Business Interest Questionnaire.

Agency Form Number: 471P.

OMB Number: 0625–0039.

Type of Request: Regular Submission.

Burden: 490 hours.

Number of Respondents: 1,000.

Avg. Hours Per Response: 30 minutes.

Needs and Uses: This collection allows U.S. firms participating in overseas trade events sponsored by the U.S. Department of Commerce's International Trade Administration (ITA) an opportunity to specifically identify their marketing objective for a specific event as well as current marketing activities and status in the specific foreign markets where the event will take place. The U.S. and Foreign Commercial Service/ITA overseas posts use the information to schedule business appointments during the trade event, arrange ''blue ribbon'' calls on key agents or distributors identified by participants prior to an event, and to issue specific show invitations appropriate prospective overseas business partners. It is critical to prearrange business appointments thus providing U.S. participants with a program of high caliber business appointments.

Affected Public: Businesses or other for-profits.

Frequency: Once.

Respondent's Obligation: Voluntary.

OMB Desk Officer: David Rostker, (202) 395–3897.

Copies of the above information collection proposal can be obtained by calling or writing Madeleine Clayton, Departmental Paperwork Clearance Officer, (202) 482–3129, Department of Commerce, Room 6086, 14th and Constitution, N.W., Washington, DC 20230 or via internet at *MClayton@doc.gov*.

Written comments and recommendations for the proposed information collection should be sent to David Rostker, OMB Desk Officer, Room 10202, New Executive Office Building, Washington, DC 20503 within 30 days of the publication of this notice in the **Federal Register**.

Dated: January 10, 2002.

Madeleine Clayton,

Departmental Paperwork Clearance Officer, Office of the Chief Information Officer.

[FR Doc. 02–1038 Filed 1–15–02; 8:45 am]

BILLING CODE 3510–DR–P

DEPARTMENT OF COMMERCE

Submission for OMB Review; Comment Request

DOC has submitted to the Office of Management and Budget (OMB) for clearance the following proposal for collection of information under the provisions of the Paperwork Reduction Act of 1995, Public Law 104–13.

Bureau: International Trade Administration.

Title: Advocacy Questionnaire.

Agency Form Number: ITA–4133P.

OMB Number: 0625–0220.

Type of Request: Regular Submission.

Burden: 205.

Number of Respondents: 200.

Avg. Hours Per Response: 30 minutes.

Needs and Uses: The U.S. Department of Commerce invites the general public and other Federal agencies to comment on the proposed extension of the use of the advocacy questionnaire by the Trade Promotion Coordination Committee's (TPCC) Advocacy Network. The questionnaire is used to evaluate requests for United States' Government (USG) commercial advocacy in connection with overseas bids and proposals. The International Trade Administration's Advocacy Center marshals federal resources to assist U.S. business interests competing for foreign government procurements worldwide. The mission of the Advocacy Center is to coordinate USG commercial advocacy in order to promote U.S. exports and create U.S. jobs. The Advocacy Center is under the umbrella of the TPCC, which is chaired by the Secretary of Commerce and includes 19 federal agencies involved in export promotion. The purpose of the advocacy questionnaire is to collect the information necessary to make an evaluation about a company's eligibility for USG advocacy assistance. There are clear, well established USG advocacy guidelines that describe the various situations in which the USG can provide advocacy support for a firm. The questionnaire was developed to collect only the information necessary to determine if the firm meets the eligibility requirements set forth in these guidelines. The Advocacy Center, appropriate ITA officials, our U.S. Embassies worldwide, and other federal government agencies (the Advocacy Network) that provide advocacy support, will require firms seeking USG advocacy support to complete the questionnaire. Without this information, the USG would be unable to make eligibility determinations.

Affected Public: Businesses or other for-profits.

Frequency: Occasionally.

Respondent's Obligation: Voluntary.

OMB Desk Officer: David Rostker, (202) 395–3897.

Copies of the above information collection proposal can be obtained by calling or writing Madeleine Clayton, Departmental Paperwork Clearance Officer, (202) 482–3129, Department of

Commerce, Room 6086, 14th and Constitution, NW, Washington, DC 20230 or via internet at *MClayton@doc.gov*.

Written comments and recommendations for the proposed information collection should be sent to David Rostker, OMB Desk Officer, Room 10202, New Executive Office Building, Washington, DC 20503 within 30 days of the publication of this notice in the **Federal Register**.

Dated: January 10, 2002.

Madeleine Clayton,

Departmental Paperwork Clearance Officer, Office of the Chief Information Officer.

[FR Doc. 02–1039 Filed 1–15–02; 8:45 am]

BILLING CODE 3510–DR–P

DEPARTMENT OF COMMERCE

Submission for OMB Review; Comment Request

The Department of Commerce (DOC) has submitted to the Office of Management and Budget (OMB) for clearance the following proposal for collection of information under provisions of the Paperwork Reduction Act (44 U.S.C. Chapter 35).

Agency: Bureau of Export Administration (BXA).

Title: National Defense Authorization Act (NDAA).

Agency Form Number: BXA–742R, BXA–742S.

OMB Approval Number: 0694–0107.

Type of Request: Extension of a currently approved collection of information.

Burden: 35 hours.

Average Time Per Response: 15 minutes per response.

Number of Respondents: 140 respondents.

Needs and Uses: This collection of information is required as the result of the amending of the Export Administration Regulations (15 CFR parts 730–799) (EAR) by revising the (EAR) requirements for exports and reexports contained in sections 1211–1215 of the National Defense Authorization Act (NDAA) for fiscal year 1998 (Pub. L. 105–85, 111 Stat. 1629), signed by the President on November 18, 1997. The Bureau of Export Administration (BXA) needs the information in this collection to fulfill two requirements of the National Defense Authorization Act for Fiscal Year 1998 (NDAA). Those requirements are: (1) Proposed exports and reexports of high performance computers to specific countries must be reviewed by enumerated government agencies prior to the export and (2) that the government conduct a ''post shipment verification'' of each high performance computer exported to those countries after November 17, 1997. Both of these requirements are new and were imposed by the Congress with the passage of the NDAA. To simplify the latter, BXA has developed a new form that will incorporate the relevant data elements and replace the written report, thereby standardizing the data format for the applicant, and enabling the use of information technology in the processing of the data.

Affected Public: Individuals, businesses or other for-profit institutions.

Respondent's Obligation: Mandatory.

OMB Desk Officer: David Rostker.

Copies of the above information collection proposal can be obtained by calling or writing Madeleine Clayton, DOC Paperwork Clearance Officer, (202) 482–3129, Department of Commerce, Room 6086, 14th and Constitution Avenue, NW., Washington, DC 20230.

Written comments and recommendations for the proposed information collection should be sent within 30 days of publication of this notice to David Rostker, OMB Desk Officer, Room 10202, New Executive Office Building, Washington, DC 20230.

Dated: January 10, 2002.

Madeleine Clayton,

Departmental Paperwork Clearance Officer, Office of the Chief Information Officer.

[FR Doc. 02–1040 Filed 1–15–02; 8:45 am]

BILLING CODE 3510–DT–P

DEPARTMENT OF COMMERCE

Submission for OMB Review; Comment Request

The Department of Commerce (DOC) has submitted to the Office of Management and Budget (OMB) for clearance the following proposal for collection of information under provisions of the Paperwork Reduction Act (44 U.S.C. Chapter 35).

Agency: Bureau of Export Administration (BXA).

Title: Prior Notification of Exports Under License Exception AGR.

Agency Form Number: BXA–748P.

OMB Approval Number: 0694–0123.

Type of Request: Emergency approval requested.

Burden: 93 hours.

Average Time Per Response: 52–57 minutes per response.

Number of Respondents: 25 respondents.

Needs and Uses: Section 906 of the TSRA requires that exports of agricultural commodities, medicine or medical devices to Cuba or to the government of a country that has been determined by the Secretary of State to have repeatedly provide support for acts of international terrorism, or to any other entity in such a country, are made pursuant to one-year licenses issued by the U.S. Government, while further providing that the requirements of one-year licenses shall be no more restrictive than license exceptions administered by the Department of Commerce, except that procedures shall be in place to deny licenses for exports to any entity within such country promoting international terrorism.

Affected Public: Individuals, businesses or other for-profit institutions.

Respondent's Obligation: Required to obtain or retain a benefit.

OMB Desk Officer: David Rostker.

Copies of the above information collection proposal can be obtained by calling or writing Madeleine Clayton, DOC Paperwork Clearance Officer, (202) 482–3129, Department of Commerce, Room 6086, 14th and Constitution Avenue, NW, Washington, DC 20230.

Written comments and recommendations for the proposed information collection should be sent within 30 days of publication of this notice to David Rostker, OMB Desk Officer, Room 10202, New Executive Office Building, Washington, DC 20230.

Dated: January 10, 2002.

Madeleine Clayton,

Departmental Paperwork Clearance Officer, Office of the Chief Information Officer.

[FR Doc. 02–1042 Filed 1–15–02; 8:45 am]

BILLING CODE 3510–33–P

DEPARTMENT OF COMMERCE

Submission for OMB Review; Comment Request

The Department of Commerce (DOC) has submitted to the Office of Management and Budget (OMB) for clearance the following proposal for collection of information under provisions of the Paperwork Reduction Act (44 U.S.C. chapter 35).

Agency: Bureau of Export Administration (BXA).

Title: Technology Letter of Explanation.

Agency Form Number: N/A.

OMB Approval Number: 0694–0047.

Type of Request: Extension of a currently approved collection of information.

Burden: 3,602 hours.

Average Time Per Response: ½ to 2 hours.

Number of Respondents: 2,896 respondents.

Needs and Uses: The information contained in these letters will assure BXA that no unauthorized technical data will be exported for unauthorized end-uses or to unauthorized destinations and thus provide assurance that U.S. national security and foreign policy programs are followed.

Affected Public: Individuals, businesses or other for-profit institutions.

Respondent's Obligation: Required to obtain or retain benefits.

OMB Desk Officer: David Rostker.

Copies of the above information collection proposal can be obtained by calling or writing Madeleine Clayton, DOC Paperwork Clearance Officer, (202) 482–3129, Department of Commerce, Room 6066, 14th and Constitution Avenue, NW, Washington, DC 20230.

Written comments and recommendations for the proposed information collection should be sent within 30 days of publication of this notice to Dave Rostker, OMB Desk Officer, Room 10202, New Executive Office Building, Washington, DC 20230.

Dated: January 10, 2002.

Madeleine Clayton,

Departmental Paperwork Clearance Officer, Office of the Chief Information Officer.

[FR Doc. 02–1043 Filed 1–15–02; 8:45 am]

BILLING CODE 3510–33–P

DEPARTMENT OF COMMERCE

Submission for OMB Review; Comment Request

The Department of Commerce (DOC) has submitted to the Office of Management and Budget (OMB) for clearance the following proposal for collection of information under provisions of the Paperwork Reduction Act (44 U.S.C. chapter 35).

Agency: Bureau of Export Administration (BXA).

Title: Computers and Related Equipment.

Agency Form Number: N/A.

OMB Approval Number: 0694–0013.

Type of Request: Extension of a currently approved collection of information.

Burden: 43.

Average Hours Per Response: 32 minutes.

Number of Respondents: 80.

Needs and Uses: The advances in U.S. computer technology have created products that have a broad range of end-uses that include military applications and other uses that may be contrary to our national security, foreign policy, and proliferation concerns. In order to continue our profitable international trade position and at the same time protect our national security, it has become necessary to establish a system for precise and detailed evaluations of computer systems.

Affected Public: Businesses or other for-profit institutions.

Respondent's Obligation: Required to obtain or retain benefits.

OMB Desk Officer: David Rostker.

Copies of the above information collection proposal can be obtained by calling or writing Madeleine Clayton, DOC Paperwork Clearance Officer, (202) 482–3129, Department of Commerce, Room 6066, 14th and Constitution Avenue, NW, Washington, DC 20230.

Written comments and recommendations for the proposed information collection should be sent within 30 days of publication of this notice to David Rostker, OMB Desk Officer, Room 10202, New Executive Office Building, Washington, DC 20230.

Dated: January 10, 2001.

Madeleine Clayton,

Departmental Paperwork Clearance Officer, Office of the Chief Information Officer.

[FR Doc. 02–1044 Filed 1–15–02; 8:45 am]

BILLING CODE 3510–33–P

DEPARTMENT OF COMMERCE

[I.D. 011102A]

Submission for OMB Review; Comment Request

The Department of Commerce has submitted to the Office of Management and Budget (OMB) for clearance the following proposal for collection of information under the provisions of the Paperwork Reduction Act (44 U.S.C. Chapter 35).

Agency: National Oceanic and Atmospheric Administration (NOAA).

Title: Permits for Incidental Taking of Endangered or Threatened Species.

Form Number(s): None.

OMB Approval Number: 0648–0230.

Type of Request: Regular submission.

Burden Hours: 1,048.

Number of Respondents: 13.

Average Hours Per Response: 80 hours for a permit application; 30 minutes for an application for a Certificate of Inclusion; 8 hours for a permit report; 10 hours for a watershed plan; and 40 hours for a transfer of an Incidental Take permit.

Needs and Uses: The Endangered Species Act (ESA) prohibits the taking of endangered species. Section 10 of the ESA allows for certain exceptions to the prohibitions, such as a taking that would be incidental to an otherwise lawful activity. The corresponding regulations provide application and reporting requirements for such exceptions. The required information is used to evaluate the proposed activity (application) and ongoing activities (reports) and is necessary for National Marine Fisheries Service to ensure the conservation of the species under the ESA.

Affected Public: Individuals or households, business or other for-profit organizations, not-for-profit institutions, and state, local, or tribal government.

Frequency: On occasion; annually.

Respondent's Obligation: Required to obtain or retain a benefit.

OMB Desk Officer: David Rostker, (202) 395–3897.

Copies of the above information collection proposal can be obtained by calling or writing Madeleine Clayton, Departmental Paperwork Clearance Officer, (202) 482–3129, Department of Commerce, Room 6086, 14th and Constitution Avenue, NW, Washington, DC 20230 (or via the Internet at MClayton@doc.gov).

Written comments and recommendations for the proposed information collection should be sent within 30 days of publication of this notice to David Rostker, OMB Desk Officer, Room 10202, New Executive Office Building, Washington, DC 20503.

Dated: January 10, 2002.

Madeleine Clayton,

Departmental Paperwork Clearance Officer, Office of the Chief Information Officer.

[FR Doc. 02–1138 Filed 1–15–02; 8:45 am]

BILLING CODE 3510–22–S

DEPARTMENT OF COMMERCE

[I.D. 011102B]

Submission for OMB Review; Comment Request

The Department of Commerce has submitted to the Office of Management and Budget (OMB) for clearance the following proposal for collection of information under the provisions of the Paperwork Reduction Act (44 U.S.C. Chapter 35).

Agency: National Oceanic and Atmospheric Administration (NOAA).

Title: Billfish Tagging Report.

Form Number(s): NOAA Form 88–162.

OMB Approval Number: 0648–0009.

Type of Request: Regular submission.

Burden Hours: 62.

Number of Respondents: 750.

Average Hours Per Response: 5 minutes.

Needs and Uses: The National Oceanic and Atmospheric

Administration's Southwest Fishery Science Center operates an angler-based billfish tagging program. Tagging supplies are provided to volunteers. When they catch and tag fish, they submit a brief report on the fish tagged and the location of tagging. The information obtained is used in conjunction with tag returns to determine billfish migration patterns, mortality rates, and similar information useful in the management of the fishery.

Affected Public: Individuals or households.

Frequency: On occasion.

Respondent's Obligation: Voluntary.

OMB Desk Officer: David Rostker, (202) 395–3897.

Copies of the above information collection proposal can be obtained by calling or writing Madeleine Clayton, Departmental Paperwork Clearance Officer, (202) 482–3129, Department of Commerce, Room 6086, 14th and Constitution Avenue, NW, Washington, DC 20230 (or via the Internet at MClayton@doc.gov).

Written comments and recommendations for the proposed information collection should be sent within 30 days of publication of this notice to David Rostker, OMB Desk Officer, Room 10202, New Executive Office Building, Washington, DC 20503.

Dated: January 10, 2002.

Madeleine Clayton,

Departmental Paperwork Clearance Officer, Office of the Chief Information Officer.

[FR Doc. 02–1139 Filed 1–15–02; 8:45 am]

BILLING CODE 3510–22–S

DEPARTMENT OF COMMERCE

[I.D. 011102C]

Submission for OMB Review; Comment Request

The Department of Commerce has submitted to the Office of Management and Budget (OMB) for clearance the following proposal for collection of information under the provisions of the Paperwork Reduction Act (44 U.S.C. chapter 35).

Agency: National Oceanic and Atmospheric Administration (NOAA).

Title: Statement of Financial Interests, Regional Fishery Management Councils.

Form Number(s): NOAA Form 88–195.

OMB Approval Number: 0648–0192.

Type of Request: Regular submission.

Burden Hours: 110.

Number of Respondents: 188.

Average Hours Per Response: 35 minutes.

Needs and Uses: The Magnuson-Stevens Fishery Conservation and Management Act authorizes the establishment of Regional Fishery Management Councils to exercise sound judgement in the stewardship of fishery resources through the preparation, monitoring, and revision of such plans under circumstances (a) which will enable the States, the fishing industry, consumer and environmental organizations, and other interested persons to participate in, and advise on, the establishment and administration of such plans, and (b) which take into account the social and economic needs of the States. Section 302 (j) of the Act, requires that Council members and Executive Directors disclose their financial interests in any harvesting, processing, or marketing activity that is being, or will be, undertaken within any fishery over which the Council concerned has jurisdiction.

The Act further provides that a member shall not vote on a Council decision which would have a significant and predictable effect on such financial interest. A Council decision shall be considered to have a significant and predictable effect on a financial interest if there is a close, causal link between the Council decision and an expected and substantially disproportionate benefit to the financial interest of the affected individual relative to the financial interest of other participants in the same gear type or sector of the fishery. However, an affected individual who is declared ineligible to vote on a Council action may participate in Council deliberations relating to the decision after notifying the Council of his/her recusal and identifying the financial interest that would be affected.

Affected Public: Individuals or households.

Frequency: On occasion; annually.

Respondent's Obligation: Mandatory.

OMB Desk Officer: David Rostker, (202) 395–3897.

Copies of the above information collection proposal can be obtained by calling or writing Madeleine Clayton, Departmental Paperwork Clearance Officer, (202) 482–3129, Department of Commerce, Room 6086, 14th and Constitution Avenue, NW, Washington, DC 20230 (or via the Internet at MClayton@doc.gov).

Written comments and recommendations for the proposed information collection should be sent within 30 days of publication of this notice to David Rostker, OMB Desk Officer, Room 10202, New Executive Office Building, Washington, DC 20503.

Dated: January 10, 2002.

Madeleine Clayton,

Departmental Paperwork Clearance Officer, Office of the Chief Information Officer.

[FR Doc. 02–1140 Filed 1–15–02; 8:45 am]

BILLING CODE 3510–22–S

DEPARTMENT OF COMMERCE

[I.D. 011102D]

Submission for OMB Review; Comment Request

The Department of Commerce has submitted to the Office of Management and Budget (OMB) for clearance the following proposal for collection of information under the provisions of the Paperwork Reduction Act (44 U.S.C. chapter 35).

Agency: National Oceanic and Atmospheric Administration (NOAA).

Title: Southeast Region Bycatch Reduction Device Certification Family of Forms.

Form Number(s): None.

OMB Approval Number: 0648–0345.

Type of Request: Regular submission.

Burden Hours: 7,500.

Number of Respondents: 31.

Average Hours Per Response: Submissions for certification in the Gulf of Mexico, 140 minutes for pre-certification; 180 minutes for pre-certification data; 140 minutes for a certification application; 20 minutes each for a vessel identification form, a gear specification form, a station sheet form, a turtle excluder device/bycatch reduction device specification form, a length frequency form, and a condition and fate form; 5 hours for a species characterization form; 4 hours for a final report; 1 hour for an observer certification or observer reference; 4 hours for testing; and 30 minutes for a submission of independent tests. Submissions for certification in the South Atlantic, 30 minutes each for a vessel identification form or a gear form; 2 hours for a station sheet bycatch reduction device evaluation form; 50 minutes for a length frequency form; 100 hours for testing; and 30 minutes for a submission of independent tests.

Needs and Uses: Persons seeking to obtain certification for bycatch reduction devices to be used on shrimp vessels in the Gulf of Mexico or South Atlantic must apply for authorization to conduct tests and submit the test results. Persons seeking certification to be observers for such tests in the Gulf of Mexico must file an application and provide two references. The information is needed for NOAA to determine if equipment meets the standards that

would allow its use in commercial fisheries.

Affected Public: Business or other for-profit organizations, individuals or households.

Frequency: On occasion.

Respondent's Obligation: Required to obtain or retain a benefit.

OMB Desk Officer: David Rostker, (202) 395–3897.

Copies of the above information collection proposal can be obtained by calling or writing Madeleine Clayton, Departmental Paperwork Clearance Officer, (202) 482–3129, Department of Commerce, Room 6086, 14th and Constitution Avenue, NW, Washington, DC 20230 (or via the Internet at MClayton@doc.gov).

Written comments and recommendations for the proposed information collection should be sent within 30 days of publication of this notice to David Rostker, OMB Desk Officer, Room 10202, New Executive Office Building, Washington, DC 20503.

Dated: January 10, 2002.

Madeleine Clayton,

Departmental Paperwork Clearance Officer, Office of the Chief Information Officer.

[FR Doc. 02–1141 Filed 1–15–02; 8:45 am]

BILLING CODE 3510–22–S

DEPARTMENT OF COMMERCE

[I.D. 011102E]

Submission for OMB Review; Comment Request

The Department of Commerce has submitted to the Office of Management and Budget (OMB) for clearance the following proposal for collection of information under the provisions of the Paperwork Reduction Act (44 U.S.C. chapter 35).

Agency: National Oceanic and Atmospheric Administration (NOAA).

Title: Alaska Marine Sport Fishing Economics Survey.

Form Number(s): None.

OMB Approval Number: None.

Type of Request: Regular submission.

Burden Hours: 1.048.

Number of Respondents: 3,740.

Average Hours Per Response: 20 minutes to respond to a mail survey; 5 minutes to respond to a follow-up phone survey.

Needs and Uses: The survey data is necessary to conduct required economic analyses of marine sport fisheries off Alaska. This data is currently not available for many areas and fisheries in Alaska. The survey data will be used to estimate the economic value of fishing to anglers, and how catch rates and fishery regulations affect that value. The respondents will be drawn from a random sample of U.S. residents who purchased an Alaska State sport fishing license in 2001. Follow-up calls will be made to people not responding to a mail survey.

Affected Public: Individuals or households.

Frequency: One-time.

Respondent's Obligation: Voluntary.

OMB Desk Officer: David Rostker, (202) 395–3897.

Copies of the above information collection proposal can be obtained by calling or writing Madeleine Clayton, Departmental Paperwork Clearance Officer, (202) 482–3129, Department of Commerce, Room 6086, 14th and Constitution Avenue, NW, Washington, DC 20230 (or via the Internet at MClayton@doc.gov).

Written comments and recommendations for the proposed information collection should be sent within 30 days of publication of this notice to David Rostker, OMB Desk Officer, Room 10202, New Executive Office Building, Washington, DC 20503.

Dated: January 10, 2002.

Madeleine Clayton,

Departmental Paperwork Clearance Officer, Office of the Chief Information Officer.

[FR Doc. 02–1142 Filed 1–15–02; 8:45 am]

BILLING CODE 3510–22–S

DEPARTMENT OF COMMERCE

Census Bureau

The American Community Survey; Proposed Collection; Comment Request

ACTION: Proposed collection; comment request.

SUMMARY: The Department of Commerce, as part of its continuing effort to reduce paper work and respondent burden, invites the general public and other federal agencies to take this opportunity to comment on proposed or continuing information collections, as required by the Paperwork Reduction Act of 1995, Public Law 104–13 (44 U.S.C. 3506(c)(2)(A)).

DATES: Written comments must be submitted on or before March 18, 2002.

ADDRESSES: Direct all written comments to Madeleine Clayton, Departmental Paperwork Clearance Officer, Department of Commerce, Room 6086, 14th and Constitution Avenue, NW, Washington, DC 20230 (or via the Internet at *mclayton@doc.gov*).

FOR FURTHER INFORMATION CONTACT: Requests for additional information or copies of the information collection instrument(s) and instructions should be directed to Lawrence McGinn, U.S. Census Bureau, Demographic Surveys Division, Washington, DC 20233. Phone: (301) 457–8050.

SUPPLEMENTARY INFORMATION:

I. Abstract

Given the rapid demographic changes experienced in recent years and the strong expectation that such changes will continue and accelerate, the once-a-decade data collection approach of a decennial census is no longer acceptable. To meet the needs and expectations of the country, the Census Bureau developed the American Community Survey. This survey will collect long-form data every month and provide tabulations of these data on a yearly basis. In the past, the long-form data were collected only at the time of each decennial census. The American Community Survey will allow the Census Bureau to remove the long form from the 2010 Census, thus reducing operational risks, improving accuracy, and providing more relevant data. After years of development and testing, the American Community Survey is ready for full implementation in FY 2003.

The American Community Survey will provide more timely information for critical economic planning by governments and the private sector. In the current information-based economy, federal, state, tribal, and local decisionmakers, as well as private business and nongovernmental organizations, need current, reliable, and comparable socioeconomic data to chart the future. The American Community Survey will provide up-to-date profiles of American communities every year beginning in 2004, providing policymakers, planners, and service providers in the public and private sectors with information every year—not just every ten years.

The American Community Survey must begin full implementation in 2003 to provide comparable data at the census tract level by July 2008. These data are needed by federal agencies and others to provide assurance of long-form type data availability before eliminating the long form from the 2010 Census.

The American Community Survey demonstration period began in 1996 in four sites. In 1999, the number of sites was increased to 31 comparison sites. The comparison with Census 2000 was designed to collect several kinds of information necessary to understand the differences between data from the 1999–2002 American Community Survey and

data from the 2000 long form. The purpose of the comparison sites was to give a good tract-by-tract comparison between the 1999–2002 American Community Survey cumulated estimates and the Census 2000 long-form estimates and to use these comparisons to identify both the causes of differences and diagnostic variables that tend to predict a certain kind of difference.

In 2000–2002, the Census Bureau conducted the Census 2000 Supplementary Survey, the 2001 Supplementary Survey, and the 2002 Supplementary Survey using the American Community Survey methodology. Each of these surveys had a sample of approximately 700,000 residential addresses per year. These surveys were conducted to study the operational feasibility of collecting long-form type data in a different methodology from the decennial census, demonstrate the reliability and stability of state and large area estimates over time, and demonstrate the usability of multiyear estimates.

For 2003–2005, the Census Bureau plans to conduct the American Community Survey in every part of the United States and also in Puerto Rico. In November 2002, the Census Bureau will begin full implementation of the American Community Survey by increasing the sample to a total of 250,000 residential addresses per month in the 50 states and the District of Columbia and 3,000 residential addresses per month in Puerto Rico. Data will be collected by mail and Census Bureau staff will follow up with households that do not respond using computer-assisted telephone interviewing (CATI) and computer-assisted personal interviewing (CAPI).

In addition to selecting a sample of residential addresses, the Census Bureau plans to select a sample of group quarters (GQs) and conduct the American Community Survey with a sample of persons within the GQs starting in January 2004. The Census Bureau will also conduct a reinterview operation with a small sample of households to monitor the quality of data collected during the CAPI.

II. Method of Collection

The Census Bureau will mail questionnaires to households selected for the American Community Survey. For households that do not return a questionnaire, Census Bureau staff will attempt to conduct interviews via CATI. We will also conduct CAPI interviews for a subsample of nonrespondents.

For most types of GQs, Census Bureau field representatives (FRs) will either help respondents complete questionnaires or leave questionnaires and ask respondents to return them by mail. For a few GQs, the FRs will attempt to conduct interviews by telephone.

The Census Bureau staff will provide Telephone Questionnaire Assistance (TQA).

The Census Bureau staff will conduct reinterviews using CAPI.

III. Data

OMB Number: 0607–0810.

Form Number(s): ACS–1, ACS–1 (GQ), ACS–3 (GQ), ACS–4(GQ), ACS–290.

Type of Review: Regular.

Affected Public: Individuals and households.

Estimated Number of Respondents: During the period of November 2002 through October 2005, we plan to contact 9,105,000 households, 40,000 persons in group quarters, and 81,000 households for reinterview.

Estimated Time Per Response: Estimates are 38 minutes per household, 15 minutes per person in group quarters, and 10 minutes per household in the reinterview sample.

Estimated Total Annual Burden Hours: 1,930,000 hours.

Estimated Total Annual Cost: Except for their time, there is no cost to respondents.

Respondent Obligation: Mandatory.

Authority: Title 13, United States Code, Section 182.

IV. Request for Comments

Comments are invited on: (a) Whether the proposed collection of information is necessary for the proper performance of the functions of the agency, including whether the information shall have practical utility; (b) the accuracy of the agency's estimate of the burden (including hours and cost) of the proposed collection of information; (c) ways to enhance the quality, utility, and clarity of the information to be collected; and (d) ways to minimize the burden of the collection of information on respondents, including through the use of automated collections techniques or other forms of information technology.

Comments submitted in response to this notice will be summarized and included in the request for the OMB approval of this information collection; they also will become a matter of public record.

Dated: January 10, 2002.

Madeleine Clayton,

Departmental Paperwork Clearance Officer, Office of the Chief Information Officer.

[FR Doc. 02–1033 Filed 1–15–02; 8:45 am]

BILLING CODE 3510–07–P

DEPARTMENT OF COMMERCE

Census Bureau

2002 Economic Census Covering the Manufacturing Sector; Proposed Collection; Comment Request

ACTION: Proposed collection; comment request.

SUMMARY: The Department of Commerce, as part of its continuing effort to reduce paperwork and respondent burden, invites the general public and other Federal agencies to take this opportunity to comment on proposed and/or continuing information collections, as required by the Paperwork Reduction Act of 1995, Public Law 104–13 (44 U.S.C. 3506(c)(2)(A)).

DATES: Written comments must be submitted on or before March 18, 2002.

ADDRESSES: Direct all written comments to Madeleine Clayton, Departmental Paperwork Clearance Officer, Department of Commerce, Room 6086, 14th and Constitution Avenue, NW., Washington, DC 20230 (or via the Internet at *MClayton@doc.gov*).

FOR FURTHER INFORMATION CONTACT: Requests for additional information or copies of the information collection instrument(s) and instructions should be directed to Mendel D. Gayle, U.S. Census Bureau, Manufacturing and Construction Division, Room 2108, Building 4, Washington, DC 20233, (301) 457–4769, (or via the Internet at *mendel.d.gayle@census.gov*).

SUPPLEMENTARY INFORMATION:

I. Abstract

The Census Bureau is the preeminent collector and provider of timely, relevant and quality data about the people and economy of the United States. Economic data are the Census Bureau's primary program commitment during nondecennial census years. The economic census, conducted under authority of Title 13, United States Code, is the primary source of facts about the structure and functioning of the Nation's economy and features unique industry and geographic detail. Economic census statistics serve as part of the framework for the national accounts and provide essential information for government, business and the general public. The 2002 Economic Census Covering the Manufacturing Sector will measure the economic activity for more than 400,000 manufacturing establishments.

The information collected from companies in the manufacturing sector

of the economic census will produce basic statistics by industry for number of establishments, payroll, employment, value of shipments, value added, capital expenditures, depreciation, materials consumed, selected purchased services, electric energy used and inventories held. Primary strategies for reducing burden in the Census Bureau economic data collections are to increase electronic reporting through broader use of computerized self-administered census questionnaires, electronic data interchange, and other electronic data collection methods.

II. Method of Collection

Establishments included in this collection will be selected from a frame provided by the Census Bureau's Business Register. To be eligible for selection, an establishment will be required to satisfy the following conditions: (i) It must be classified in the manufacturing sector; (ii) it must be an active operating establishment of a multi-establishment company, or it must be an operating single-establishment company with payroll; and (iii) it must be located in one of the 50 states or the District of Columbia. Most establishments will be included in the mail portion of the collection. Forms tailored for the particular kind of business will be mailed to the establishment to be filled out and returned. Establishments not meeting certain cutoffs for payroll will be included in the non-mail portion of the collection. We will use administrative data in lieu of collecting data directly from these establishments.

Mail selection procedures will distinguish several groups of establishments. Establishment selection to a particular group is based on a number of factors. The more important considerations are the size of the company and whether it is included in the intercensal Annual Survey of Manufactures (ASM) sample panel. The ASM panel is representative of both large and small establishments from the mail component of the manufacturing census. The ASM sample panel includes approximately 55,000 establishments. The various groups of establishments that will constitute the 2002 Economic Census are outlined below.

A. Establishments of Multi-Establishment Companies

Selection procedures will assign eligible establishments of multi-establishment companies to the mail components of the potential respondent universe.

We estimate that the census mail canvass for 2002 will include the following:

1. *ASM sample establishments:* 32,000.
2. *Non-ASM:* 50,000.

B. Single-Establishment Companies Engaged in Manufacturing Activity With Payroll

As an initial step in the selection process, we will conduct a study of the potential respondent universe for manufacturing. The study of potential respondents will produce a set of industry-specific payroll cutoffs that we will use to distinguish large versus small-establishment companies within each industry. This payroll size distinction will affect selection as follows:

1. Large Single-Establishment Companies

Single-establishment companies having annualized payroll (from Federal administrative records) that equals or exceeds the cutoff for their industry will be assigned to the mail component of the potential respondent universe.

We estimate that the census mail canvass for 2002 will include the following:

a. *ASM sample establishments:* 23,000.
b. *Non-ASM:* 101,000.

2. Small Single-Establishment Companies

In selected industries, small single-establishment companies that satisfy a particular criteria (administrative record payroll cutoff) will receive a manufacturing short form, which will collect a reduced amount of basic statistics and other essential information that is not available from administrative records.

We estimate that the census mail canvass for 2002 will include approximately 54,000 companies in this category. This category does not contain ASM establishments.

3. All remaining single-establishment companies with payroll will be represented in the census by data estimated from Federal administrative records. Generally, we do not include these small employers in the census mail canvass.

We estimate that this category for 2002 will include approximately 140,000 manufacturing companies.

III. Data

OMB Number: Not available.

Form Number: The forms used to collect information from businesses in these sectors of the economic census are tailored to specific business practices and are too numerous to list separately in this notice. You can obtain information on the proposed content of the forms by calling Mendel D. Gayle on (301) 457–4769 (or via the Internet at *mendel.d.gayle@census.gov*).

Type of Review: Regular review.

Affected Public: Business or Other for Profit, Non-profit Institutions, Small Businesses or Organizations, and State or Local Governments.

Estimated Number of Respondents:

ASM—55,000
Non-ASM (Long Form)—151,000
Non-ASM (Short Form)—54,000
Total—260,000

Estimated Time Per Response:

ASM—5.6 hrs.
Non-ASM (Long Form)—3.4 hrs.
Non-ASM (Short Form)—2.2 hrs.

Estimated Total Annual Burden Hours:

ASM—308,000
Non-ASM (Long Form)—513,400
Non-ASM (Short Form)—118,800
Total—940,200

Estimated Total Annual Cost: $14,403,864.

Respondent's Obligation: Mandatory.

Legal Authority: Title 13, United States Code, Sections 131 and 224.

IV. Request for Comments

Comments are invited on: (a) Whether the proposed collection of information is necessary for the proper performance of the functions of the agency, including whether the information shall have practical utility; (b) the accuracy of the agency's estimate of the burden (including hours and cost) of the proposed collection of information; (c) ways to enhance the quality, utility, and clarity of the information to be collected; and (d) ways to minimize the burden of the collection of information on respondents, including through the use of automated collection techniques or other forms of information technology.

Comments submitted in response to this notice will be summarized and/or included in the request for OMB approval of this information collection; they also will become a matter of public record.

Dated: January 10, 2002.

Madeleine Clayton,

Departmental Paperwork Clearance Officer, Office of the Chief Information Officer.

[FR Doc. 02–1034 Filed 1–15–02; 8:45 am]

BILLING CODE 3510–07–P

DEPARTMENT OF COMMERCE

Economic Development Administration

Petition by a Firm for Certification of Eligibility To Apply for Trade Adjustment Assistance

ACTION: Extension of a currently approved collection, comment request.

The Department of Commerce (DoC) has submitted to the Office of Management and Budget (OMB) for clearance the following proposal for collection of information under provisions of the Paperwork Reduction Act (44 U.S.C. Chapter 5).

Agency: Economic Development Administration (EDA).

Title: Petition by a Firm for Certification of Eligibility to Apply for Trade Adjustment Assistance.

Agency Form Number: ED–840.

OMB Approval Number: 0610–0091.

Type of Request: Extension of a currently approved collection.

Burden: 1,544 hours.

Average Hours Per Response: 8 hours.

Number of Respondents: 193 respondents.

Needs and Uses: The information collection is needed to determine whether a firm is eligible to apply for trade adjustment assistance. This assistance helps U.S. manufacturing firms injured by imports to develop strategies for competing in the global market place. The information submitted is a major phase in obtaining a firm's history, including sales, production and employment data (the firm provides quarterly unemployment security forms submitted to the state, a description of the products produced by such firm, tax returns and/or financial statements, a firm's decline in sales accounts, and brochures of such firm's production). The information collection provides an essential tool for firms to use in submitting the information required to demonstrate that they qualify for certification of eligibility. The information is required under section 251 of the Trade Act of 1974, as amended.

Affected Public: Businesses, farms or other for-profit organizations.

Frequency: One time.

Respondent's Obligation: Required to obtain or retain benefits.

OMB Desk Officer: David Rostker, (202) 395–7340.

Copies of the above information collection proposal can be obtained by calling or writing Madeleine G. Clayton, DoC Forms Clearance Officer, (202) 482–3129, U.S. Department of Commerce, Room 6086, 14th and Constitution Avenue, NW., Washington, DC 20230. Written comments and recommendations for the proposed information collection should be sent within 30 days of publication of this notice to David Rostker, OMB Desk Officer, Room 10202, New Executive Office Building, Washington, DC 20503.

Dated: January 10, 2002.

Madeleine G. Clayton,

Departmental Forms Clearance Officer, Office of the Chief Information Officer.

[FR Doc. 02–1041 Filed 1–15–02; 8:45 am]

BILLING CODE 3510–34–P

DEPARTMENT OF COMMERCE

International Trade Administration

[A–570–870]

Notice of Postponement of Final Determination of Antidumping Duty Investigation: Certain Circular Welded Carbon-Quality Steel Pipe From the People's Republic of China

AGENCY: Import Administration, International Trade Administration, Department of Commerce.

ACTION: Notice of postponement of final determination of antidumping duty investigation.

EFFECTIVE DATE: January 16, 2002.

FOR FURTHER INFORMATION CONTACT: Alex Villanueva or Bob Bolling, Office IX, DAS Group III, Import Administration, International Trade Administration, U.S. Department of Commerce, 14th Street and Constitution Avenue NW., Washington, DC 20230; telephone (202) 482–6412 and (202) 482–3434, respectively.

The Applicable Statute and Regulations

Unless otherwise indicated, all citations to the statute are references to the provisions effective January 1, 1995, the effective date of the amendments made to the Tariff Act of 1930 (the Act) by the Uruguay Round Agreements Act (URAA). In addition, unless otherwise indicated, all citations to Department of Commerce (the Department) regulations refer to the regulations codified at 19 CFR part 351 (2001).

Background

This investigation was initiated on June 13, 2001. *See Notice of Initiation of Antidumping Duty Investigation: Certain Circular Welded Carbon-Quality Steel Pipe from the People's Republic of China,* 66 FR 33227 (June 21, 2001). The period of investigation (POI) is October 1, 2000 through March 31, 2001. On December 31, 2001, the Department published the notice of preliminary determination. *See Notice of Preliminary Determination of Sales at Less Than Fair Value: Certain Circular Welded Carbon-Quality Steel Pipe from the People's Republic of China,* 66 FR 67500 (December 31, 2001).

Postponement of Final Determination and Extension of Provisional Measures

Section 735(a)(2) of the Act provides that a final determination may be postponed until not later than 135 days after the date of the publication of the preliminary determination if, in the event of an affirmative preliminary determination, a request for such postponement is made by exporters who account for a significant proportion of exports of the subject merchandise, or in the event of a negative preliminary determination, a request for such postponement is made by petitioner. The Department's regulations, at 19 CFR 351.210(e)(2), require that requests by respondents for postponement of a final determination be accompanied by a request for extension of provisional measures from a four-month period to not more than six months.

On December 17, 2001 Tianjin Shuang Jie Steel Pipe Co., Ltd (Shuang Jie) requested that the Department postpone its final determination until no later than 135 days after the date of the publication of the preliminary determination in the **Federal Register** and requested an extension of the provisional measures pursuant to 19 CFR 351.210(e)(2). In accordance with section 735(a)(2) of the Act and 19 CFR 351.210(b), because (1) our preliminary determination was affirmative, (2) Shuang Jie accounts for a significant proportion of exports of the subject merchandise, and (3) no compelling reasons for denial exist, we are granting Shuang Jie's request and are postponing the final determination until no later than 135 days after the publication of preliminary determination in the **Federal Register**. We are also extending the provisional measures, from four months to six months, in accordance with 19 CFR 351.210(e)(2). Suspension of liquidation will be extended accordingly.

Therefore, the final results are now due on May 15, 2002. This notice is published in accordance with section 735(a)(2) of the Act.

Dated: January 9, 2002.

Faryar Shirzad,

Assistant Secretary for Import Administration.

[FR Doc. 02–1129 Filed 1–15–02; 8:45 am]

BILLING CODE 3510–DS–P

DEPARTMENT OF COMMERCE

International Trade Administration

[A–588–837]

Large Newspaper Printing Presses and Components Thereof, Whether Assembled or Unassembled, From Japan: Final Results of Antidumping Duty Administrative Review and Revocation in Part

AGENCY: Import Administration, International Trade Administration, Department of Commerce.

ACTION: Notice of final results of antidumping duty administrative review and revocation in part.

SUMMARY: On October 9, 2001, the Department of Commerce published the preliminary determination to rescind the administrative review, in part, and to revoke the order, in part, and the preliminary results of the administrative review of the antidumping duty order on large newspaper printing presses and components thereof, whether assembled or unassembled, from Japan. The review covers Tokyo Kikai Seisakusho, Ltd., a manufacturer/exporter of the subject merchandise to the United States. The period of review is September 1, 1999, through August 31, 2000.

No interested party submitted comments on our preliminary results. We have made no changes to the margin calculation. Therefore, the final results do not differ from the preliminary results. The final weighted-average dumping margin for Tokyo Kikai Seisakusho, Ltd. is listed below in the ''Final Results of Review'' section of this notice.

In addition, we have made a final determination to rescind the administrative review with respect to Mitsubishi Heavy Industries, Ltd., and to revoke the antidumping duty order with respect to Tokyo Kikai Seisakusho, Ltd.

EFFECTIVE DATE: January 16, 2002.

FOR FURTHER INFORMATION CONTACT: David J. Goldberger, or Kate Johnson, Office 2, AD/CVD Enforcement Group I, Import Administration—Room B099, International Trade Administration, U.S. Department of Commerce, 14th Street and Constitution Avenue, NW., Washington, DC 20230; telephone: (202) 482–4136, or 482–4929, respectively.

SUPPLEMENTARY INFORMATION:

The Applicable Statute

Unless otherwise indicated, all citations to the Tariff Act of 1930, as amended (the Act), are references to the provisions effective January 1, 1995, the effective date of the amendments made to the Act by the Uruguay Round Agreements Act. In addition, unless otherwise indicated, all citations to the Department of Commerce's (the Department's) regulations are to 19 CFR part 351 (April 2000).

Background

This review covers one manufacturer/exporter, Tokyo Kikai Seisakusho, Ltd. (TKS).

On October 9, 2001, the Department of Commerce published in the **Federal Register** the preliminary results of administrative review of the antidumping duty order on large newspaper printing presses (LNPP) and components thereof, whether assembled or unassembled, from Japan (66 FR 51379) (*Preliminary Results*).

We invited parties to comment on the preliminary results of the review. TKS submitted a case brief on November 8, 2001. On December 4, 2001, TKS withdrew its case brief from the record of this review. No other interested party submitted comments. The Department has conducted this administrative review in accordance with section 751 of the Act.

Scope of the Order

The products covered by the order are large newspaper printing presses, including press systems, press additions and press components, whether assembled or unassembled, whether complete or incomplete, that are capable of printing or otherwise manipulating a roll of paper more than two pages across. A page is defined as a newspaper broadsheet page in which the lines of type are printed perpendicular to the running of the direction of the paper or a newspaper tabloid page with lines of type parallel to the running of the direction of the paper.

In addition to press systems, the scope of the order includes the five press system components. They are: (1) A printing unit, which is any component that prints in monocolor, spot color and/or process (full) color; (2) a reel tension paster (RTP), which is any component that feeds a roll of paper more than two newspaper broadsheet pages in width into a subject printing unit; (3) a folder, which is a module or combination of modules capable of cutting, folding, and/or delivering the paper from a roll or rolls of newspaper broadsheet paper more than two pages in width into a newspaper format; (4) conveyance and access apparatus capable of manipulating a roll of paper more than two newspaper broadsheet pages across through the production process and which provides structural support and access; and (5) a computerized control system, which is any computer equipment and/or software designed specifically to control, monitor, adjust, and coordinate the functions and operations of large newspaper printing presses or press components.

A press addition is comprised of a union of one or more of the press components defined above and the equipment necessary to integrate such components into an existing press system.

Because of their size, large newspaper printing press systems, press additions, and press components are typically shipped either partially assembled or unassembled, complete or incomplete, and are assembled and/or completed prior to and/or during the installation process in the United States. Any of the five components, or collection of components, the use of which is to fulfill a contract for large newspaper printing press systems, press additions, or press components, regardless of degree of assembly and/or degree of combination with non-subject elements before or after importation, is included in the scope of this order. Also included in the scope are elements of a LNPP system, addition or component, which taken altogether, constitute at least 50 percent of the cost of manufacture of any of the five major LNPP components of which they are a part.

For purposes of the order, the following definitions apply irrespective of any different definition that may be found in Customs rulings, U.S. Customs law or the *Harmonized Tariff Schedule of the United States* (HTSUS): (1) The term ''unassembled'' means fully or partially unassembled or disassembled; and (2) the term ''incomplete'' means lacking one or more elements with which the LNPP is intended to be equipped in order to fulfill a contract for a LNPP system, addition or component.

This scope does not cover spare or replacement parts. Spare or replacement parts imported pursuant to a LNPP contract, which are not integral to the original start-up and operation of the LNPP, and are separately identified and valued in a LNPP contract, whether or not shipped in combination with covered merchandise, are excluded from the scope of this order. Used presses are also not subject to this scope. Used presses are those that have been previously sold in an arm's-length transaction to a purchaser that used them to produce newspapers in the ordinary course of business.

Also excluded from the scope, in accordance with the Department's determination in a changed-

circumstances antidumping duty administrative review of the order which resulted in the partial revocation of the order with respect to certain merchandise, are elements and components of LNPP systems, and additions thereto, which feature a 22 inch cut-off, 50 inch web width and a rated speed no greater than 75,000 copies per hour. *See Large Newspaper Printing Presses Components Thereof, Whether Assembled or Unassembled, from Japan: Final Results of Changed Circumstances Antidumping Duty Administrative Review and Intent to Revoke Antidumping Duty Order, In Part,* 64 FR 72315 (Dec. 27, 1999). In addition to the specifications set out in this paragraph, all of which must be met in order for the product to be excluded from the scope of the order, the product must also meet all of the specifications detailed in the five numbered sections following this paragraph. If one or more of these criteria is not fulfilled, the product is not excluded from the scope of the order.

1. *Printing Unit:* A printing unit which is a color keyless blanket-to-blanket tower unit with a fixed gain infeed and fixed gain outfeed, with a rated speed no greater than 75,000 copies per hour, which includes the following features:

- Each tower consisting of four levels, one or more of which must be populated.
- Plate cylinders which contain slot lock-ups and blanket cylinders which contain reel rod lock-ups both of which are of solid carbon steel with nickel plating and with bearers at both ends which are configured in-line with bearers of other cylinders.
- Keyless inking system which consists of a passive feed ink delivery system, an eight roller ink train, and a non-anilox and non-porous metering roller.
- The dampener system which consists of a two nozzle per page spraybar and two roller dampener with one chrome drum and one form roller.
- The equipment contained in the color keyless ink delivery system is designed to achieve a constant, uniform feed of ink film across the cylinder without ink keys. This system requires use of keyless ink which accepts greater water content.

2. *Folder:* A module which is a double 3:2 rotary folder with 160 pages collect capability and double (over and under) delivery, with a cut-off length of 22 inches. The upper section consists of three-high double formers (total of 6) with six sets of nipping rollers.

3. *RTP:* A component which is of the two-arm design with core drives and core brakes, designed for 50 inch diameter rolls; and arranged in the press line in the back-to-back configuration (left and right hand load pairs).

4. *Conveyance and Access Apparatus:* Conveyance and access apparatus capable of manipulating a roll of paper more than two newspaper broadsheets across through the production process, and a drive system which is of conventional shafted design.

5. *Computerized Control System:* A computerized control system, which is any computer equipment and/or software designed specifically to control, monitor, adjust, and coordinate the functions and operations of large newspaper printing presses or press components.

Further, this order covers all current and future printing technologies capable of printing newspapers, including, but not limited to, lithographic (offset or direct), flexographic, and letterpress systems. The products covered by this order are imported into the United States under subheadings 8443.11.10, 8443.11.50, 8443.30.00, 8443.59.50, 8443.60.00, and 8443.90.50 of the HTSUS. Large newspaper printing presses may also enter under HTSUS subheadings 8443.21.00 and 8443.40.00. Large newspaper printing press computerized control systems may enter under HTSUS subheadings 8471.49.10, 8471.49.21, 8471.49.26, 8471.50.40, 8471.50.80, and 8537.10.90. Although the HTSUS subheadings are provided for convenience and customs purposes, our written description of the scope of the order is dispositive.

Duty Absorption

On September 29, 2000, the petitioner requested that the Department determine whether antidumping duties had been absorbed during the period of review (POR). Section 751(a)(4) of the Act provides for the Department, if requested, to determine during an administrative review initiated two or four years after the publication of the order, whether antidumping duties have been absorbed by a foreign producer or exporter, if the subject merchandise is sold in the United States through an affiliated importer. In this case, TKS sold to the United States through an importer that is affiliated within the meaning of section 771(33) of the Act.

Because this review was initiated four years after the publication of the antidumping duty order, we will make a duty absorption determination in this segment of the proceeding. As we have found that there is no dumping margin for TKS with respect to its U.S. sales, we have also found that there is no duty absorption for purposes of the final results.

Rescission of Administrative Review

Mitsubishi Heavy Industries, Ltd. (MHI) notified the Department that it had not made any U.S. sales or entries of subject merchandise during the POR. Accordingly, in the preliminary results, we made a preliminary determination to rescind this review with respect to MHI. As we have not received any comments on this determination, we are rescinding this review with respect to MHI.

Determination To Revoke Order in Part

The Department ''may revoke, in whole or in part,'' an antidumping duty order upon completion of a review under section 751 of the Act. While Congress has not specified the procedures that the Department must follow in revoking an order, the Department has developed a procedure for revocation that is described in 19 CFR 351.222. This regulation requires, *inter alia*, that a company requesting revocation must submit the following: (1) A certification that the company has sold the subject merchandise at not less than normal value (NV) in the current review period and that the company will not sell at less than NV in the future; (2) a certification that the company sold the subject merchandise in each of the three years forming the basis of the request in commercial quantities; and (3) an agreement to reinstatement of the order if the Department concludes that the company, subsequent to the revocation, sold subject merchandise at less than NV. *See* 19 CFR 351.222(e)(1). Upon receipt of such a request, the Department will revoke an order, in part, if it concludes that: (1) The company in question has sold subject merchandise at not less than NV for a period of at least three consecutive years; (2) the continued application of the antidumping order is not otherwise necessary to offset dumping; and (3) the company has agreed in writing to immediate reinstatement of the order if the Department concludes that the company, subsequent to the revocation, sold subject merchandise at less than NV. *See* 19 CFR part 351.222(b)(2).

In the preliminary results, we found that TKS met the requirements for revocation (*see Preliminary Results*). We received no comments on this determination. Accordingly, we have determined that the Department's requirements for revocation have been met. Based on the final results in this review and the final results of the two preceding reviews, TKS has demonstrated three consecutive years of

sales at not less than NV. Furthermore, we find that TKS's aggregate sales to the United States have been made in commercial quantities during each of those years. In the particular situation of LNPPs, one sale, which may be worth millions of dollars, constitutes a commercial quantity. TKS had at least one sale in each of the three reviews. Finally, based on our review of the record, there is no basis to find continued application of the order is necessary to offset dumping.

Therefore, for the reasons discussed above, we find that TKS qualifies for revocation of the order on LNPPs which it produces and exports to the United States under 19 CFR 351.222(b)(2)(ii).

Final Results of the Review

Our final results remain unchanged from the preliminary results. The following weighted-average margin percentage applies to TKS for the period September 1, 1999, through August 31, 2000:

Manufacturer/exporter	Percent margin
Tokyo Kikai Seisakusho, Ltd	0.00

Effective Date of Revocation

This revocation applies to all entries of subject merchandise that are produced by TKS and that are also exported by TKS, entered, or withdrawn from warehouse, for consumption on or after September 1, 2000. The Department will order the suspension of liquidation ended for all such entries and will instruct the Customs Service to release any cash deposits or bonds. The Department will further instruct the Customs Service to refund with interest any cash deposits on entries made after August 31, 2000.

Assessment Rates

The Department shall determine, and the Customs Service shall assess, antidumping duties on all appropriate entries. The Department will issue appraisement instructions directly to the Customs Service. In accordance with 19 CFR part 351.106(c)(2), we will instruct the Customs Service to liquidate without regard to antidumping duties all entries of the subject merchandise for which the importer-specific assessment rate is zero or *de minimis* (*i.e.*, less than 0.50 percent).

This notice serves as a final reminder to importers of their responsibility under 19 CFR 351.402(f)(2) to file a certificate regarding the reimbursement of antidumping duties prior to liquidation of the relevant entries during this review period. Failure to comply with this requirement could result in the Secretary's presumption that reimbursement of antidumping duties occurred and the subsequent assessment of double antidumping duties.

Cash Deposit Requirements

The following deposit requirements shall be effective for all shipments of the subject merchandise from Japan that are entered, or withdrawn from warehouse, for consumption on or after the publication date of the final results of this administrative review, as provided for by section 751(a)(1) of the Act: (1) Cash deposits for TKS will no longer be required and the suspension of liquidation will cease for entries made on or after September 1, 2000; (2) for previously investigated companies not listed above, the cash deposit rate will continue to be the company-specific rate published for the most recent period; (3) if the exporter is not a firm covered in this review, or the original investigation, but the manufacturer is, the cash deposit rate will be the rate established for the most recent period for the manufacturer of the merchandise; and (4) the cash deposit rate for all other manufacturers or exporters of this merchandise will continue to be 58.69 percent, the all others rate made effective by the less-than-fair-value investigation. These requirements, when imposed, shall remain in effect until publication of the final results of the next administrative review.

This notice serves as the only reminder to parties subject to administrative protective order (APO) of their responsibility concerning the disposition of proprietary information disclosed under APO in accordance with 19 CFR part 351.305(a)(3). Timely written notification of return/destruction of APO materials or conversion to judicial protective order is hereby requested. Failure to comply with the regulation and the terms of an APO is a sanctionable violation.

This administrative review and notice are issued and published in accordance with sections 751(a)(1) and 777(i)(1) of the Act and 19 CFR part 351.221.

Dated: January 9, 2002.

Faryar Shirzad,

Assistant Secretary for Import Administration.

[FR Doc. 02–1130 Filed 1–15–02; 8:45 am]

BILLING CODE 3510–DS–P

DEPARTMENT OF COMMERCE

International Trade Administration

[A–428–821]

Large Newspaper Printing Presses and Components Thereof, Whether Assembled or Unassembled, From Germany: Final Results of Antidumping Duty Administrative Review

AGENCY: Import Administration, International Trade Administration, Department of Commerce.

ACTION: Notice of final results of antidumping duty administrative review.

SUMMARY: On October 9, 2001, the Department of Commerce published the preliminary results of the administrative review of the antidumping duty order on large newspaper printing presses and components thereof, whether assembled or unassembled, from Germany. The review covers MAN Roland Druckmaschinen AG, a manufacturer/exporter of the subject merchandise to the United States. The period of review is September 1, 1999, through August 31, 2000.

No interested party submitted comments on our preliminary results. We have made no changes to the margin calculation. Therefore, the final results do not differ from the preliminary results. The final weighted-average dumping margin for MAN Roland Druckmaschinen AG is listed below in the ''Final Results of Review'' section of this notice.

EFFECTIVE DATE: January 16, 2002.

FOR FURTHER INFORMATION CONTACT: David J. Goldberger, or Kate Johnson, Office 2, AD/CVD Enforcement Group I, Import Administration-Room B099, International Trade Administration, U.S. Department of Commerce, 14th Street and Constitution Avenue, NW., Washington, DC 20230; telephone: (202) 482–4136, or 482–4929, respectively.

SUPPLEMENTARY INFORMATION:

The Applicable Statute

Unless otherwise indicated, all citations to the Tariff Act of 1930, as amended (the Act), are references to the provisions effective January 1, 1995, the effective date of the amendments made to the Act by the Uruguay Round Agreements Act (URAA). In addition, unless otherwise indicated, all citations to the Department of Commerce's (the Department's) regulations are to 19 CFR part 351 (April 2000).

Background

This review covers one manufacturer/exporter, MAN Roland Druckmaschinen AG (MAN Roland).

On October 9, 2001, the Department of Commerce published in the **Federal Register** the preliminary results of administrative review of the antidumping duty order on large newspaper printing presses (LNPP) and components thereof, whether assembled or unassembled, from Germany (66 FR 51375) (*Preliminary Results*).

We invited parties to comment on the preliminary results of the review. MAN Roland submitted a case brief on November 8, 2001. On November 29, 2001, MAN Roland withdrew its case brief from the record of this review. No other interested party submitted comments. The Department has conducted this administrative review in accordance with section 751 of the Act.

Scope of the Order

The products covered by the order are large newspaper printing presses, including press systems, press additions and press components, whether assembled or unassembled, whether complete or incomplete, that are capable of printing or otherwise manipulating a roll of paper more than two pages across. A page is defined as a newspaper broadsheet page in which the lines of type are printed perpendicular to the running of the direction of the paper or a newspaper tabloid page with lines of type parallel to the running of the direction of the paper.

In addition to press systems, the scope of the order includes the five press system components. They are: (1) A printing unit, which is any component that prints in monocolor, spot color and/or process (full) color; (2) a reel tension paster (RTP), which is any component that feeds a roll of paper more than two newspaper broadsheet pages in width into a subject printing unit; (3) a folder, which is a module or combination of modules capable of cutting, folding, and/or delivering the paper from a roll or rolls of newspaper broadsheet paper more than two pages in width into a newspaper format; (4) conveyance and access apparatus capable of manipulating a roll of paper more than two newspaper broadsheet pages across through the production process and which provides structural support and access; and (5) a computerized control system, which is any computer equipment and/or software designed specifically to control, monitor, adjust, and coordinate the functions and operations of large newspaper printing presses or press components.

A press addition is comprised of a union of one or more of the press components defined above and the equipment necessary to integrate such components into an existing press system.

Because of their size, large newspaper printing press systems, press additions, and press components are typically shipped either partially assembled or unassembled, complete or incomplete, and are assembled and/or completed prior to and/or during the installation process in the United States. Any of the five components, or collection of components, the use of which is to fulfill a contract for large newspaper printing press systems, press additions, or press components, regardless of degree of assembly and/or degree of combination with non-subject elements before or after importation, is included in the scope of this order. Also included in the scope are elements of a LNPP system, addition or component, which taken altogether, constitute at least 50 percent of the cost of manufacture of any of the five major LNPP components of which they are a part.

For purposes of the order, the following definitions apply irrespective of any different definition that may be found in Customs rulings, U.S. Customs law or the *Harmonized Tariff Schedule of the United States* (HTSUS): (1) The term ''unassembled'' means fully or partially unassembled or disassembled; and (2) the term ''incomplete'' means lacking one or more elements with which the LNPP is intended to be equipped in order to fulfill a contract for a LNPP system, addition or component.

This scope does not cover spare or replacement parts. Spare or replacement parts imported pursuant to a LNPP contract, which are not integral to the original start-up and operation of the LNPP, and are separately identified and valued in a LNPP contract, whether or not shipped in combination with covered merchandise, are excluded from the scope of this order. Used presses are also not subject to this scope. Used presses are those that have been previously sold in an arm's-length transaction to a purchaser that used them to produce newspapers in the ordinary course of business.

Further, this order covers all current and future printing technologies capable of printing newspapers, including, but not limited to, lithographic (offset or direct), flexographic, and letterpress systems. The products covered by this order are imported into the United States under subheadings 8443.11.10, 8443.11.50, 8443.30.00, 8443.59.50, 8443.60.00, and 8443.90.50 of the HTSUS. Large newspaper printing presses may also enter under HTSUS subheadings 8443.21.00 and 8443.40.00. Large newspaper printing press computerized control systems may enter under HTSUS subheadings 8471.49.10, 8471.49.21, 8471.49.26, 8471.50.40, 8471.50.80, and 8537.10.90. Although the HTSUS subheadings are provided for convenience and customs purposes, our written description of the scope of the order is dispositive.

Duty Absorption

On September 29, 2000, the petitioner requested that the Department determine whether antidumping duties had been absorbed during the period of review. Section 751(a)(4) of the Act provides for the Department, if requested, to determine during an administrative review initiated two or four years after the publication of the order, whether antidumping duties have been absorbed by a foreign producer or exporter, if the subject merchandise is sold in the United States through an affiliated importer. In this case, MAN Roland sold to the United States through an importer that is affiliated within the meaning of section 771(33) of the Act.

Because this review was initiated four years after the publication of the antidumping duty order, we will make a duty absorption determination in this segment of the proceeding. As we have found that there is no dumping margin for MAN Roland with respect to its U.S. sales, we have also found that there is no duty absorption for purposes of the final results.

Final Results of the Review

Our final results remain unchanged from the preliminary results. The following weighted-average margin percentage applies to MAN Roland for the period September 1, 1999, through August 31, 2000:

Manufacturer/Exporter	Period	Margin (percent)
MAN Roland Druckmaschinen AG.	9/1/99–8/31/00	0.00

Assessment Rates

The Department shall determine, and the Customs Service shall assess, antidumping duties on all appropriate entries. The Department will issue appraisement instructions directly to the Customs Service. In accordance with 19 CFR 351.106(c)(2), we will instruct the Customs Service to liquidate without regard to antidumping duties all entries of the subject merchandise for which the importer-specific assessment rate is zero or *de minimis* (*i.e.*, less than 0.50 percent).

This notice serves as a final reminder to importers of their responsibility under 19 CFR 351.402(f)(2) to file a certificate regarding the reimbursement of antidumping duties prior to liquidation of the relevant entries during this review period. Failure to comply with this requirement could result in the Secretary's presumption that reimbursement of antidumping duties occurred and the subsequent assessment of double antidumping duties.

Cash Deposit Requirements

The following deposit requirements shall be effective for all shipments of the subject merchandise from Germany that are entered, or withdrawn from warehouse, for consumption on or after the publication date of the final results of this administrative review, as provided for by section 751(a)(1) of the Act: (1) The cash deposit rate for MAN Roland will be the rate established above in the ''Final Results of the Review'' section; (2) for previously investigated companies not listed above, the cash deposit rate will continue to be the company-specific rate published for the most recent period; (3) if the exporter is not a firm covered in this review, or the original investigation, but the manufacturer is, the cash deposit rate will be the rate established for the most recent period for the manufacturer of the merchandise; and (4) the cash deposit rate for all other manufacturers or exporters of this merchandise will continue to be 30.72 percent, the all others rate made effective by the less-than-fair-value investigation. These requirements, when imposed, shall remain in effect until publication of the final results of the next administrative review.

This notice serves as the only reminder to parties subject to administrative protective order (APO) of their responsibility concerning the disposition of proprietary information disclosed under APO in accordance with 19 CFR 351.305(a)(3). Timely written notification of return/destruction of APO materials or conversion to judicial protective order is hereby requested. Failure to comply with the regulation and the terms of an APO is a sanctionable violation.

This administrative review and notice are issued and published in accordance with sections 751(a)(1) and 777(i)(1) of the Act and 19 CFR 351.221.

Dated: January 9, 2002.

Faryar Shirzad,

Assistant Secretary for Import Administration.

[FR Doc. 02–1131 Filed 1–15–02; 8:45 am]

BILLING CODE 3510–DS–P

DEPARTMENT OF COMMERCE

International Trade Administration

[A–580–834]

Notice of Amended Final Antidumping Duty Administrative Review: Stainless Steel Sheet and Strip in Coils From the Republic of Korea

AGENCY: Import Administration, International Trade Administration, Department of Commerce.

ACTION: Notice of amended final results of antidumping duty administrative review of stainless steel sheet and strip in coils from the Republic of Korea.

EFFECTIVE DATE: January 16, 2002.

FOR FURTHER INFORMATION CONTACT: Brandon Farlander and Laurel LaCivita, AD/CVD Enforcement Group III, Office 9, Import Administration, International Trade Administration, U.S. Department of Commerce, 14th Street and Constitution Avenue, NW., Washington, DC 20230; telephone: (202) 482–0182 and (202) 482–4243, respectively.

The Applicable Statute and Regulations

Unless otherwise indicated, all citations to the Tariff Act of 1930, as amended (''the Act''), are references to the provisions effective January 1, 1995, the effective date of the amendments made to the Act by the Uruguay Round Agreements Act (''URAA''). In addition, unless otherwise indicated, all citations to the Department's regulations are to the regulations codified at 19 CFR part 351 (2001).

Scope of the Review

For purposes of this administrative review, the products covered are certain stainless steel sheet and strip in coils. Stainless steel is an alloy steel containing, by weight, 1.2 percent or less of carbon and 10.5 percent or more of chromium, with or without other elements. The subject sheet and strip is a flat-rolled product in coils that is greater than 9.5 mm in width and less than 4.75 mm in thickness, and that is annealed or otherwise heat treated and pickled or otherwise descaled. The subject sheet and strip may also be further processed (*e.g.,* cold-rolled, polished, aluminized, coated, *etc.*) provided that it maintains the specific dimensions of sheet and strip following such processing.

The merchandise subject to this review is classified in the Harmonized Tariff Schedule of the United States (HTS) at subheadings: 7219.13.0031, 7219.13.0051, 7219.13.0071, 7219.1300.81,[1] 7219.14.0030, 7219.14.0065, 7219.14.0090, 7219.32.0005, 7219.32.0020, 7219.32.0025, 7219.32.0035, 7219.32.0036, 7219.32.0038, 7219.32.0042, 7219.32.0044, 7219.33.0005, 7219.33.0020, 7219.33.0025, 7219.33.0035, 7219.33.0036, 7219.33.0038, 7219.33.0042, 7219.33.0044, 7219.34.0005, 7219.34.0020, 7219.34.0025, 7219.34.0030, 7219.34.0035, 7219.35.0005, 7219.35.0015, 7219.35.0030, 7219.35.0035, 7219.90.0010, 7219.90.0020, 7219.90.0025, 7219.90.0060, 7219.90.0080, 7220.12.1000, 7220.12.5000, 7220.20.1010, 7220.20.1015, 7220.20.1060, 7220.20.1080, 7220.20.6005, 7220.20.6010, 7220.20.6015, 7220.20.6060, 7220.20.6080, 7220.20.7005, 7220.20.7010, 7220.20.7015, 7220.20.7060, 7220.20.7080, 7220.20.8000, 7220.20.9030, 7220.20.9060, 7220.90.0010, 7220.90.0015, 7220.90.0060, and 7220.90.0080. Although the HTS subheadings are provided for convenience and Customs purposes, the Department's written description of the merchandise under review is dispositive.

Excluded from the scope of this review are the following: (1) Sheet and strip that is not annealed or otherwise heat treated and pickled or otherwise descaled, (2) sheet and strip that is cut to length, (3) plate (i.e., flat-rolled stainless steel products of a thickness of 4.75 mm or more), (4) flat wire (i.e., cold-rolled sections, with a prepared edge, rectangular in shape, of a width of not more than 9.5 mm), and (5) razor blade steel. Razor blade steel is a flat-rolled product of stainless steel, not further worked than cold-rolled (cold-

[1] Due to changes to the HTS numbers in 2001, 7219.13.0030, 7219.13.0050, 7219.13.0070, and 7219.13.0080 are now 7219.13.0031, 7219.13.0051, 7219.13.0071, and 7219.13.0081, respectively.

reduced), in coils, of a width of not more than 23 mm and a thickness of 0.266 mm or less, containing, by weight, 12.5 to 14.5 percent chromium, and certified at the time of entry to be used in the manufacture of razor blades. *See* Chapter 72 of the HTS, ''Additional U.S. Note'' 1(d).

In response to comments by interested parties, the Department has determined that certain specialty stainless steel products are also excluded from the scope of this review. These excluded products are described below.

Flapper valve steel is defined as stainless steel strip in coils containing, by weight, between 0.37 and 0.43 percent carbon, between 1.15 and 1.35 percent molybdenum, and between 0.20 and 0.80 percent manganese. This steel also contains, by weight, phosphorus of 0.025 percent or less, silicon of between 0.20 and 0.50 percent, and sulfur of 0.020 percent or less. The product is manufactured by means of vacuum arc remelting, with inclusion controls for sulphide of no more than 0.04 percent and for oxide of no more than 0.05 percent. Flapper valve steel has a tensile strength of between 210 and 300 ksi, yield strength of between 170 and 270 ksi, plus or minus 8 ksi, and a hardness (Hv) of between 460 and 590. Flapper valve steel is most commonly used to produce specialty flapper valves in compressors.

Also excluded is a product referred to as suspension foil, a specialty steel product used in the manufacture of suspension assemblies for computer disk drives. Suspension foil is described as 302/304 grade or 202 grade stainless steel of a thickness between 14 and 127 microns, with a thickness tolerance of plus-or-minus 2.01 microns, and surface glossiness of 200 to 700 percent Gs. Suspension foil must be supplied in coil widths of not more than 407 mm, and with a mass of 225 kg or less. Roll marks may only be visible on one side, with no scratches of measurable depth. The material must exhibit residual stresses of 2 mm maximum deflection, and flatness of 1.6 mm over 685 mm length.

Certain stainless steel foil for automotive catalytic converters is also excluded from the scope of this review. This stainless steel strip in coils is a specialty foil with a thickness of between 20 and 110 microns used to produce a metallic substrate with a honeycomb structure for use in automotive catalytic converters. The steel contains, by weight, carbon of no more than 0.030 percent, silicon of no more than 1.0 percent, manganese of no more than 1.0 percent, chromium of between 19 and 22 percent, aluminum of no less than 5.0 percent, phosphorus of no more than 0.045 percent, sulfur of no more than 0.03 percent, lanthanum of less than 0.002 or greater than 0.05 percent, and total rare earth elements of more than 0.06 percent, with the balance iron.

Permanent magnet iron-chromium-cobalt alloy stainless strip is also excluded from the scope of this review. This ductile stainless steel strip contains, by weight, 26 to 30 percent chromium, and 7 to 10 percent cobalt, with the remainder of iron, in widths 228.6 mm or less, and a thickness between 0.127 and 1.270 mm. It exhibits magnetic remanence between 9,000 and 12,000 gauss, and a coercivity of between 50 and 300 oersteds. This product is most commonly used in electronic sensors and is currently available under proprietary trade names such as ''Arnokrome III.''[2]

Certain electrical resistance alloy steel is also excluded from the scope of this review. This product is defined as a non-magnetic stainless steel manufactured to American Society of Testing and Materials (''ASTM'') specification B344 and containing, by weight, 36 percent nickel, 18 percent chromium, and 46 percent iron, and is most notable for its resistance to high temperature corrosion. It has a melting point of 1390 degrees Celsius and displays a creep rupture limit of 4 kilograms per square millimeter at 1000 degrees Celsius. This steel is most commonly used in the production of heating ribbons for circuit breakers and industrial furnaces, and in rheostats for railway locomotives. The product is currently available under proprietary trade names such as ''Gilphy 36.''[3]

Certain martensitic precipitation-hardenable stainless steel is also excluded from the scope of this review. This high-strength, ductile stainless steel product is designated under the Unified Numbering System (''UNS'') as S45500-grade steel, and contains, by weight, 11 to 13 percent chromium, and 7 to 10 percent nickel. Carbon, manganese, silicon and molybdenum each comprise, by weight, 0.05 percent or less, with phosphorus and sulfur each comprising, by weight, 0.03 percent or less. This steel has copper, niobium, and titanium added to achieve aging, and will exhibit yield strengths as high as 1700 Mpa and ultimate tensile strengths as high as 1750 Mpa after aging, with elongation percentages of 3 percent or less in 50 mm. It is generally provided in thicknesses between 0.635 and 0.787 mm, and in widths of 25.4 mm. This product is most commonly used in the manufacture of television tubes and is currently available under proprietary trade names such as ''Durphynox 17.''[4]

Finally, three specialty stainless steels typically used in certain industrial blades and surgical and medical instruments are also excluded from the scope of this review. These include stainless steel strip in coils used in the production of textile cutting tools (e.g., carpet knives).[5] This steel is similar to AISI grade 420 but containing, by weight, 0.5 to 0.7 percent of molybdenum. The steel also contains, by weight, carbon of between 1.0 and 1.1 percent, sulfur of 0.020 percent or less, and includes between 0.20 and 0.30 percent copper and between 0.20 and 0.50 percent cobalt. This steel is sold under proprietary names such as ''GIN4 Mo.'' The second excluded stainless steel strip in coils is similar to AISI 420–J2 and contains, by weight, carbon of between 0.62 and 0.70 percent, silicon of between 0.20 and 0.50 percent, manganese of between 0.45 and 0.80 percent, phosphorus of no more than 0.025 percent and sulfur of no more than 0.020 percent. This steel has a carbide density on average of 100 carbide particles per 100 square microns. An example of this product is ''GIN5'' steel. The third specialty steel has a chemical composition similar to AISI 420 F, with carbon of between 0.37 and 0.43 percent, molybdenum of between 1.15 and 1.35 percent, but lower manganese of between 0.20 and 0.80 percent, phosphorus of no more than 0.025 percent, silicon of between 0.20 and 0.50 percent, and sulfur of no more than 0.020 percent. This product is supplied with a hardness of more than Hv 500 guaranteed after customer processing, and is supplied as, for example, ''GIN6''.[6]

Amendment of Final Results

On December 6, 2001, the Department of Commerce (''the Department'') issued its final results and partial rescission for stainless steel sheet and strip in coils from the Republic of Korea for the January 4, 1999 through June 30, 2000 period of review. *See Stainless Steel Sheet and Strip From the Republic of Korea; Final Results and Partial Rescission of Antidumping Duty Administrative Review (''Final Results'')*, 66 FR 64950 (December 17, 2001).

[2] ''Arnokrome III'' is a trademark of the Arnold Engineering Company.

[3] ''Gilphy 36'' is a trademark of Imphy, S.A.

[4] ''Durphynox 17'' is a trademark of Imphy, S.A.

[5] This list of uses is illustrative and provided for descriptive purposes only.

[6] ''GIN4 Mo,'' ''GIN5'' and ''GIN6'' are the proprietary grades of Hitachi Metals America, Ltd.

On December 13, 2001, respondent Sammi Steel Co., Ltd. (''Sammi'') timely filed an allegation that the Department made a ministerial error in the final results. Petitioners did not submit any comments in reply to this ministerial error allegation.

The Department is revising the all others rate applied to Sammi in the final results in this administrative review of stainless steel sheet and strip in coils from the Republic of Korea. Because Sammi did not participate in the original investigation and because Sammi had no shipments during the period of review, its cash deposit rate is the all others rate assigned to this case.

Sammi's Allegation of a Ministerial Error by the Department

Sammi contends that the Department, in its *Final Results*, erroneously applied the all others rate determined in the original investigation to Sammi, a no shipper during the period of review. Sammi notes that the Department amended its final determination on August 28, 2001, revising the all others rate from 12.12 percent to 2.49 percent. *See Notice of Amendment of Final Determinations of Sales at Less Than Fair Value: Stainless Steel Plate in Coils From the Republic of Korea; and Stainless Steel Sheet and Strip in Coils From the Republic of Korea (''Amended Final Determination'')*, 66 FR 45279 (August 28, 2001). Sammi contends that the Department should amend its *Final Results* to apply the all others rate of 2.49 percent determined in the *Amended Final Determination* to Sammi.

Sammi notes that the Department's regulations defines a ministerial error as an ''error in addition, subtraction, or other arithmetic function, clerical error resulting from inaccurate copying, duplication, or the like, and any other similar type of unintentional error which the Secretary considers ministerial,'' citing 19 CFR 351.224(f). Therefore, Sammi requests that the Department correct this ministerial error by revising Sammi's cash deposit rate and the all others rate to 2.49 percent in this administrative review, in accordance with the *Amended Final Determination.*

Department's Position: We agree with Sammi. Our *Final Results* erroneously stated that the ''all others rate'' applicable to exporters or manufacturers who have not been covered in this or any previous review conducted by the Department is 12.12 percent rather than the 2.49 percent established in the *Amended Final Determination.* The correct all others rate applicable to Sammi is the all others rate established in the *Amended Final Determination.* Since Sammi did not participate in the original investigation and because Sammi had no shipments in the current period of review, its cash deposit rate is the all others rate determined in the *Amended Final Determination.*

Therefore, we are amending the final results of the antidumping duty administrative review of stainless steel sheet and strip in coils from the Republic of Korea to reflect the correction of the above-cited ministerial error.

We are issuing and publishing this determination and notice in accordance with sections 751(a)(1) and 777(i) of the Act.

Dated: January 9, 2002.

Faryar Shirzad,

Assistant Secretary for Import Administration.

[FR Doc. 02–1128 Filed 1–15–02; 8:45 am]

BILLING CODE 3510–DS–P

DEPARTMENT OF COMMERCE

International Trade Administration

Application for Duty-Free Entry of Scientific Instrument

Pursuant to section 6(c) of the Educational, Scientific and Cultural Materials Importation Act of 1966 (Pub. L. 89–651; 80 Stat. 897; 15 CFR part 301), we invite comments on the question of whether an instrument of equivalent scientific value, for the purposes for which the instrument shown below is intended to be used, is being manufactured in the United States.

Comments must comply with 15 CFR 301.5(a)(3) and (4) of the regulations and be filed within 20 days with the Statutory Import Programs Staff, U.S. Department of Commerce, Washington, DC 20230. Applications may be examined between 8:30 A.M. and 5 P.M. in Suite 4100W, U.S. Department of Commerce, Franklin Court Building, 1099 14th Street, NW., Washington, DC.

Docket Number: 01–022. *Applicant:* The Scripps Research Institute, 10550 North Torrey Pines Road, La Jolla, CA 92037. *Instrument:* Electron Microscope, Model Tecnai F20T. *Manufacturer:* FEI Company, The Netherlands. *Intended Use:* The instrument is intended to be used in the study of the following:

(1) Cowpea Mosaic Virus isolated from infected plants.

(2) NwV Mosaic Virus isolated from insect cells.

(3) Muscle Proteins isolated from vertebrate striated and smooth muscle fibers.

(4) Microtubules and associated proteins isolated from bovine brain or from bacterial expression systems.

(5) CHIP28 Water Channels isolated from human erythrocytes.

(6) Aqua Porins isolated from plants.

(7) Acetylcholine Receptors isolated from the electric organ of Torpedo californica and T.marmorata.

(8) Gap Junctions isolated from rat hearts and liver as well as from tissue culture expression systems.

(9) Rotavirus and Reovirus isolated from infected tissue culture cells.

(10) Transcription Complexes from bacterial and yeast expression systems.

(11) A number of enzyme complexes: fatty acid synthane, gylceraldehyde-3-phosphate dehydrogenase, hemocyanin, GroEL, isolated from various tissues of animal and plant origin.

(12) Tobacco Mosaic Virus isolated from infected plants.

The goals of the investigations are in general to understand the structural basis for how the subcellular organelles function and to elucidate the role that they play in the life of the cell.

Application accepted by Commissioner of Customs: October 14, 2001.

Gerald A. Zerdy,

Program Manager, Statutory Import Programs Staff.

[FR Doc. 02–1132 Filed 1–15–02; 8:45 am]

BILLING CODE 3510–DS–P

DEPARTMENT OF COMMERCE

National Oceanic and Atmospheric Administration

[I.D. 011102G]

Proposed Information Collection; Comment Request; Economic Performance Data for the West Coast (California-Alaska) Commercial Fisheries

AGENCY: National Oceanic and Atmospheric Administration (NOAA).

ACTION: Notice.

SUMMARY: The Department of Commerce, as part of its continuing effort to reduce paperwork and respondent burden, invites the general public and other Federal agencies to take this opportunity to comment on proposed and/or continuing information collections, as required by the Paperwork Reduction Act of 1995, Pub. L. 104–13 (44 U.S.C. 3506 (c)(2)(A)).

DATES: Written comments must be submitted on or before March 18, 2002.

ADDRESSES: Direct all written comments to Madeleine Clayton, Departmental

Paperwork Clearance Officer, Department of Commerce, Room 6086, 14th and Constitution Avenue NW, Washington DC 20230 (or via Internet at MClayton@doc.gov).

FOR FURTHER INFORMATION CONTACT: Requests for additional information or copies of the information collection instrument(s) and instructions should be directed to Dave Colpo, Pacific States Marine Fisheries Commission, 7600 Sand Point Way N.E., Seattle, WA 98115, phone 206–526–4251, dave—colpo@psmfc.org; Steve Freese, Alaska Fisheries Science Center, 7600 Sand Point Way N.E., Seattle, WA 98115, phone 206–526–6113, Steve.Freese@noaa.gov; or Joe Terry, Alaska Fisheries Science Center, 7600 Sand Point Way N.E., Seattle, WA 98115, phone 206–526–4253, Joe.Terry@noaa.gov.

SUPPLEMENTARY INFORMATION:

I. Abstract

Economic performance data for selected West Coast (California-Alaska) commercial fisheries will be collected for each of the following groups of operations: (1) processors, including on-shore plants, mothership vessels and at-sea catcher/processor vessels; (2) catcher vessels; and (3) charter vessels. Companies associated with these groups will be surveyed for expenditure, earnings and employment data. In general, questions will be asked concerning ex-vessel and wholesale prices and revenue, variable and fixed costs, expenditures, dependence on the fisheries, and fishery employment. The data collection efforts will be coordinated to reduce the additional burden for those who participate in multiple fisheries. Each year the principal focus of this data collection program will be on a different set of fisheries or on a different set of participants in these fisheries. The data will be used for the following three purposes: (1) to monitor the economic performance of these fisheries and various components of these fisheries through primary processing; (2) to analyze the economic performance effects of current management measures; and (3) to analyze the economic performance effects of alternative management measures. The measures of economic performance to be supported by this data collection program include the following: (1) contribution to net National benefit; (2) contribution to income of groups of participants in the fisheries (i.e., fishermen, vessel owners, processing plant employees, and processing plant owners) (3) employment; (4) regional economic impacts (income and employment); and (5) factor utilization rates. As required by law, the confidentiality of the data will be protected.

In each year, the data collection effort will focus on different components of the West Coast fisheries and more limited data will be collected for the previously surveyed components of these fisheries. The latter will be done to update the models that will be used to track economic performance and to evaluate the economic effects of alternative management actions. This cycle of data collection will result in economic performance data being available and updated for all the components of the West Coast fisheries identified above.

The large scale of most of the processing operations involved in these fisheries and of many of the harvesting operations and the concentration of ownership in many of these fisheries, particularly off Alaska, means that improved economic data for the management of these fisheries is a high priority for the individuals who will provide data for these fisheries. This is demonstrated by the fact that associations representing many of the Alaskan participants in these fisheries support this data collection effort and have volunteered to assist in verifying the data.

II. Method of Collection

Data will be collected from a sample of the owners and operators of catcher vessels, catcher/processors, on-shore processing plants, motherships and charter vessels that participate in these fisheries. The data are expected to be collected principally by NMFS and Pacific States Marine Fisheries Commission economists. Questionnaires will be mailed to the selected members of each of the different survey groups and in many cases those individuals will be interviewed to ensure the clarity of their responses. To the extent practicable, the data collected will consist of data that the respondents maintain for their own business purposes. Therefore, the collection burden will consist principally of transcribing data from their internal records to the survey instrument and participating in personal interviews. In addition, current data reporting requirements will be evaluated to determine if they can be modified to provide improved economic data at a lower cost to respondents and the Agency. Similarly, it will be determined if some of these data can be collected more effectively and efficiently from the firms that provide bookkeeping and accounting services to participants in West Cost commercial marine fisheries. This data collection method would be used only after obtaining permission to do so from participants in the fisheries.

The surveys described in this Federal Register Notice will be voluntary. The North Pacific Fishery Management Council is considering the development of additional mandatory reporting requirements for economic data. If such requirements are implemented, the data collected with voluntary surveys in Alaska would be decreased.

III. Data

OMB Number: 0648–0369.

Form Number: None.

Type of Review: Regular submission.

Affected Public: Business and other for-profit organizations.

Estimated Number of Respondents: 2,278.

Estimated Time Per Response: 2 hours for a response from a catcher vessel; 1 hour for a response from a charter boat operator; and 8 hours for a response from a processor.

Estimated Total Annual Burden Hours: 7,074.

Estimated Total Annual Cost to Public: $0.

IV. Request for Comments

Comments are invited on: (a) whether the proposed collection of information is necessary for the proper performance of the functions of the agency, including whether the information shall have practical utility; (b) the accuracy of the agency's estimate of the burden (including hours and cost) of the proposed collection of information; (c) ways to enhance the quality, utility, and clarity of the information to be collected; and (d) ways to minimize the burden of the collection of information on respondents, including through the use of automated collection techniques or other forms of information technology.

Comments submitted in response to this notice will be summarized and/or included in the request for OMB approval of this information collection; they also will become a matter of public record.

Dated: January 10, 2002.

Madeleine Clayton,

Departmental Paperwork Clearance Officer, Office of the Chief Information Officer.

[FR Doc. 02–1143 Filed 1–15–02; 8:45 am]

BILLING CODE 3510–22–S

DEPARTMENT OF COMMERCE

National Oceanic and Atmospheric Administration

[I.D. 011102F]

North Pacific Fishery Management Council; Public Meeting

AGENCY: National Marine Fisheries Service (NMFS), National Oceanic and Atmospheric Administration (NOAA), Commerce.

ACTION: Notice of Committee Meeting.

SUMMARY: The North Pacific Fishery Management Council's (Council) Essential Fish Habitat (EFH) Committee will meet in Juneau, AK.

DATES: The meeting will be held on January 29–30, 2002.

ADDRESSES: The meeting will be held at the Alaska Fisheries Science Center, 7600 Sand Point Way NE, Seattle, WA.

Council address: North Pacific Fishery Management Council, 605 W. 4th Ave., Suite 306, Anchorage, AK 99501–2252.

FOR FURTHER INFORMATION CONTACT: Cathy Coon, North Pacific Fishery Management Council; 907–271–2809.

SUPPLEMENTARY INFORMATION: The meeting will begin at 10:30 a.m. on Tuesday, January 29, continue through Wednesday, January 30. The committee's agenda includes the following issues:

1. Review of alternatives for EFH and habitat areas of particular concern (HAPC).
2. Discussion of HAPC site designation/proposal process.
3. Develop final recommendation on EFH and HAPC alternatives.
4. Review draft Groundfish Programmatic Groundfish Supplementary Environmental Impact Statement schedule, table of contents, and purpose and need statements.
5. Presentation and discussion of white paper on mitigation alternatives and gear impact analysis.
6. Discussion of format for NMFS workshop on gear effects.

Although non-emergency issues not contained in this agenda may come before this group for discussion, those issues may not be the subject of formal action during this meeting. Action will be restricted to those issues specifically identified in this notice and any issues arising after publication of this notice that require emergency action under section 305(c) of the Magnuson-Stevens Fishery Conservation and Management Act, provided the public has been notified of the Council's intent to take final action to address the emergency.

Special Accommodations

These meetings are physically accessible to people with disabilities. Requests for sign language interpretation or other auxiliary aids should be directed to Helen Allen, 907–271–2809, at least 5 working days prior to the meeting date.

Dated: January 11, 2002.

Richard W. Surdi,

Acting Director, Office of Sustainable Fisheries, National Marine Fisheries Service.

[FR Doc. 02–1134 Filed 1–15–02; 8:45 am]

BILLING CODE 3510–22–S

DEPARTMENT OF COMMERCE

National Oceanic and Atmospheric Administration

[I.D. 010902B]

Marine Mammals; File No. 775–1600–01

AGENCY: National Marine Fisheries Service (NMFS), National Oceanic and Atmospheric Administration (NOAA), Commerce.

ACTION: Receipt of application for amendment.

SUMMARY: Notice is hereby given that Michael Sissenwine, Northeast Fisheries Science Center, National Marine Fisheries Service, Room 312, 166 Water Street, Woods Hole, MA 02543, has requested an amendment to scientific research Permit No. 775–1600–01.

DATES: Written or telefaxed comments must be received on or before February 15, 2002.

ADDRESSES: The amendment request and related documents are available for review upon written request or by appointment in the following office(s):

Permits, Conservation and Education Division, Office of Protected Resources, NMFS, 1315 East-West Highway, Room 13705, Silver Spring, MD 20910; phone (301) 713–2289; fax (301) 713–0376; and

Northeast Region, NMFS, One Blackburn Drive, Gloucester, MA 01930–2298; phone (508) 281–9250; fax (508) 281–9371.

Written comments or requests for a public hearing on this request should be submitted to the Chief, Permits, Conservation and Education Division, F/PR1, Office of Protected Resources, NMFS, 1315 East-West Highway, Room 13705, Silver Spring, MD 20910. Those individuals requesting a hearing should set forth the specific reasons why a hearing on this particular amendment request would be appropriate.

Comments may also be submitted by facsimile at (301) 713–0376, provided the facsimile is confirmed by hard copy submitted by mail and postmarked no later than the closing date of the comment period. Please note that comments will not be accepted by e-mail or other electronic media.

FOR FURTHER INFORMATION CONTACT: Amy Sloan or Ruth Johnson, (301) 713–2289.

SUPPLEMENTARY INFORMATION: The subject amendment to Permit No. 775–1600–01, issued on March 6, 2001 (66 FR 32793) is requested under the authority of the Marine Mammal Protection Act of 1972, as amended (16 U.S.C. 1361 *et seq.*), and the Regulations Governing the Taking and Importing of Marine Mammals (50 CFR part 216).

Permit No. 775–1600–01 authorizes the permit holder to conduct research on 28 species of cetacean in the North Atlantic Ocean, and on harbor seals (*Phoca vitulina*), gray seals (*Halichoerus grypus*), harp seals (*Phoca groenlandica*), and hooded seals (*Cystophora cristata*) in coastal Maine, Massachusetts, New Hampshire, and Delaware. The principal purpose of the research, for all species, relates to stock assessment, an activity for which NMFS has primary responsibility under the MMPA. Types of take for cetaceans include potential harassment by shipboard and aerial approach, photo-ID, biopsy sampling, acoustic sampling, and tagging. Types of take for the 4 species of pinnipeds include potential harassment by shipboard and aerial approach; type of takes for harbor and gray seals include photo-ID and incidental harassment during scat and carcass collections; harbor seals may also be captured, biopsy and blood sampled, VHF tagged, ''hat tagged'', and flipper tagged. The Permit also authorizes import and export of marine mammal parts (including soft and hard tissue, blood, extracted DNA, and whole dead animals or parts thereof) to and from any country.

The permit holder requests authorization to capture, examine, measure, flipper tag (retain tissue from tagging), apply a ''seal hat'', and photograph up to 200 gray seal pups; blood sample 50 of the 200 pups captured; and VHF tag 30 of the 200 pups captured. These activities would occur in coastal Maine and Massachusetts for purposes of stock assessment.

In compliance with the National Environmental Policy Act of 1969 (42 U.S.C. 4321 *et seq.*), an initial determination has been made that the activity proposed is categorically excluded from the requirement to prepare an environmental assessment or environmental impact statement.

Concurrent with the publication of this notice in the **Federal Register**, NMFS is forwarding copies of this application to the Marine Mammal Commission and its Committee of Scientific Advisors.

Dated: January 9, 2002.

Ann D. Terbush,

Chief, Permits, Conservation and Education Division, Office of Protected Resources, National Marine Fisheries Service.

[FR Doc. 02–1135 Filed 1–15–02; 8:45 am]

BILLING CODE 3510–22–S

CONSUMER PRODUCT SAFETY COMMISSION

Sunshine Act Meeting

AGENCY: Consumer Product Safety Commission, Washington, DC 20207.

TIME AND DATE: Thursday, January 24, 2002, 2 p.m.

LOCATION: Room 410, East West Towers, 4330 East West Highway, Bethesda, Maryland.

STATUS: Closed to the Public—Pursuant to 5 U.S.C. 552b(f)(1) and 16 CFR 1013.4(b)(3), (7), (9) and (10) and submitted to the **Federal Register** pursuant to 5 U.S.C. 552b(e)(3).

MATTER TO BE CONSIDERED:

Compliance Status Report

The staff will brief the Commission on the status of various compliance matters.

For a recorded message containing the latest agenda information, call (301) 504–0709.

CONTACT PERSON FOR ADDITIONAL INFORMATION: Todd A. Stevenson, Office of the Secretary, 4330 East West Highway, Bethesda, MD 20207, (301) 504–0800.

Dated: January 14, 2002.

Todd A. Stevenson,

Secretary.

[FR Doc. 02–1277 Filed 1–14–02; 2:15 pm]

BILLING CODE 6355–01–M

DEPARTMENT OF DEFENSE

Office of the Secretary

Defense Science Board

AGENCY: Department of Defense.

ACTION: Notice of advisory committee meeting.

SUMMARY: The Defense Science Board (DSB) Task Force on Missile Defense will meet in closed session on January 23, 2002, at the Institute for Defense Analyses, 1801 N. Beauregard Street, Alexandria, VA. This Task Force will develop recommendations that help guide the ballistic missile defense system (BMDS) toward a fully integrated, layered defense capable of defeating ballistic missiles in any phase of their flight.

The mission of the Defense Science Board is to advise the Secretary of Defense and the Under Secretary of Defense for Acquisition, Technology & Logistics on scientific and technical matters as they affect the perceived needs of the Department of Defense. At this meeting, the Defense Science Board Task Force will examine five areas: counter-countermeasures; boost phase technology; battle management and command, control, and communications; international cooperation; and the evolution of ballistic missile threats.

In accordance with section 10(d) of the Federal Advisory Committee Act, Pub. L. 92–463, as amended (5 U.S.C. App. II), it has been determined that this Defense Science Board Task Force meeting concerns matters listed in 5 U.S.C. 552b(c)(1) and that, accordingly, the meeting will be closed to the public.

Due to critical mission requirements and the short timeframe to accomplish this review, there is insufficient time to provide timely notice required by section 10(a)(2) of the Federal Advisory Committee Act and Subsection 101–6.1015(b) of the GSA Final Rule on Federal Advisory Committee Management, 41 CFR part 101–6, which further requires publication at least 15 calendar days prior to the first meeting of the Task Force on Missile Defense.

Dated: January 9, 2002.

Patricia L. Toppings,

Alternate OSD Federal Register Liaison Officer, Department of Defense.

[FR Doc. 02–1051 Filed 1–15–02; 8:45 am]

BILLING CODE 5001–08–M

DEPARTMENT OF DEFENSE

Department of the Army; Corps of Engineers

Availability of the Record of Decision on Arthur Kill Channel—Howland Hook Marine Terminal, New York and New Jersey

AGENCY: U.S. Army Corps of Engineers, DoD.

ACTION: Notice of availability.

SUMMARY: The Record of Decision (ROD) on the Arthur Kill Channel—Howland Hook Marine Terminal, New York and New Jersey, was signed by Robert H. Griffin, Brigadier General, U.S. Army, Director of Civil Works and transmitted to the New York District of the U.S. Army Corps of Engineers by memo dated 4 September, 2001. The ROD closes the administrative record for the Final Supplemental Environmental Impact Statement on the above referenced project.

DATES: There is no closing date for the availability of the ROD.

ADDRESSES: The ROD may be obtained from the Army Corps of Engineers Planning Division, 26 Federal Plaza, New York, NY 10278–0090.

FOR FURTHER INFORMATION CONTACT: Ms. Therese Fretwell, Environmental Technical Coordinator, CENAN–PL–EA, Corps of Engineers, New York District, 26 Plaza, NY, NY 10278–0090, Tel. 212–264–5736.

Luz D. Ortiz,

Army Federal Register Liaison Officer.

[FR Doc. 02–1148 Filed 1–15–02; 8:45 am]

BILLING CODE 3710–06–M

DEPARTMENT OF DEFENSE

Department of the Army, Corps of Engineers

Intent To Prepare a Draft Environmental Impact Statement (DEIS) for a Proposed Hurricane and Storm Damage Reduction Project at the Village of Asharoken, Suffolk County, NY

AGENCY: U.S. Army Corps of Engineers, DoD.

NOTICE: Notice of intent.

SUMMARY: U.S. Army Corps of Engineers (USACE), New York District, announces its intent to prepare a DEIS pursuant to the National Environmental Policy Act (NEPA), in accordance with the Council on Environmental Quality (CEQ) Regulations for Implementing the Procedural Provisions of NEPA and the Department of the Army, USACE Procedures for Implementing NEPA, to assess the environmental impacts of a proposed hurricane and storm damage reduction project for the north shore of Long Island in the Village of Asharoken, NY. In accordance with USACE policies, the USACE will conduct a feasibility study to evaluate a range of structural and non-structural project alternatives. The following improvement measures would be considered: beach fill only, beach fill in combination with structures such as floodwalls, buried rubble-mound seawalls, dunes, stone revetments, interior drainage features, modifications to existing shore structures, sand by-passing; and non-structural measures

such as relocations, buyouts, and flood proofing of threatened properties. Offshore sand borrow areas, as well as upland areas, will be investigated as potential sources of beach fill material.

FOR FURTHER INFORMATION CONTACT: Questions about the proposed action and the DEIS can be answered by: Ms. Megan B. Grubb, (212) 264–5759, U.S. Army Engineer District, New York Planning Division, ATTN: CENA–PL–EA, 26 Federal Plaza, New York, NY 10278–0090.

SUPPLEMENTARY INFORMATION:

Project Location: This notice announces the initiation of the feasibility phase study for beach erosion control, storm damage reduction and related purposes along the north shore of Long Island at Asharoken, NY. The study area extends from Long Island Sound on the north, Duck Island Harbor and Northport Bay on the south, the North Power Station on the East and Eatons Neck on the west.

Project Authorization and History: The North Shore of Long Island, village of Asharoken, New York, Hurricane and Storm Damage Reduction Study was authorized by a resolution of the U.S. House of Representatives Committee on Public Works and Transportation, adopted May 13, 1993. In response to the study resolution and a State request, following the devastating coastal storm of December 1992, the USACE performed a Reconnaissance Study and issued a Reconnaissance Report in September 1995 that demonstrated a potential Federal interest and the need for a more detailed feasibility study.

Project Need; The Long Island northern shoreline has historically experienced coastal erosion and related storm damage, most recently from the two storms of September 1996 and October 1996, and from previous storms including the Christmas Eve 1994 storm, and March 1993 Blizzard of the Century, the December 1992 northeaster, Hurricane Danielle of September 1992 and Halloween Storm of 1991. These Storms caused evacuations in several north shore communities as well as damage from flooding and loss of structures from erosion. The December 1992 storm alone inundated hundreds of residential and business properties and caused damages estimated at $12,000,000. The loss of beachfront in some areas now leaves the site increasingly vulnerable to severe damages even from moderate storms. The length of Asharoken Beach is approximately 2.5 miles, while the width varies from 100 feet at the northwestern end to 1,000 feet at the southeastern end. Asharoken Avenue, which generally runs parallel to the Long Island Sound shoreline, provides only vehicular access to the Village and the Eatons Neck community. While the most critically threatened location of Asharoken Avenue is protected by a small temporary shore protection project, the feasibility study will consider long-term protection throughout the Village.

DEIS Scope: The intended DEIS will evaluate the potential environmental and cultural impacts associated with the proposed hurricane and storm damage reduction alternatives for the Village of Asharoken, NY.

Public Involvement: The USACE intends to schedule an interagency meeting and public scoping meeting in the spring/summer 2002 to discuss the scope of the DEIS and data gaps. The public scoping meeting place, date, and time will be advertised in advance in local newspapers, and meeting announcement letters will be sent to interested parties. A scoping document will be made available at least one month before scheduled public scoping meeting date at the following locations:

(1) Northport Public Library, 151 Laurel Avenue, Northport, NY 11768.

(2) East Northport Public Library, 185 Larkfield Road, East Northport, NY 11731.

(3) Huntington Main Library, 338 Main Street, Huntington, NY 11743.

The public will have an opportunity to provide written and oral comments at the public scoping meeting. Written comments may also be submitted via mail and should be directed to Ms. Megan B. Grubb at the address listed above under **FOR FURTHER INFORMATION CONTACT** heading. The USACE plans to issue the DEIS in Spring 2003. The USACE will announce availability of the draft in the **Federal Register** and other media, and will provide the public, organizations, and agencies with the opportunity to submit comments, which will be addressed in the final Environmental Impact Statement.

Luz D. Ortiz,

Army Federal Register Liaison Officer.

[FR Doc. 02–1147 Filed 1–15–02; 8:45 am]

BILLING CODE 3710–06–M

DEPARTMENT OF DEFENSE

Department of the Army, Corps of Engineers

Intent To Prepare a Draft Environmental Impact Statement (DEIS) for a Proposed Hurricane and Storm Damage Reduction Project at the Village of Bayville, Nassau County, New York

AGENCY: U.S. Army Corps of Engineers, DoD.

ACTION: Notice of intent.

SUMMARY: The U.S. Army Corps of Engineers (USACE), New York District, announces its intent to prepare a DEIS pursuant to the National Environment Policy Act (NEPA), in accordance with the Council on Environmental Quality (CEO) Regulations for Implementing the Procedural Provisions of NEPA and the Department of the Army, USACE Procedures for Implementing NEPA, to assess the environmental impacts of a proposed hurricane and storm damage reduction project for the north shore of Long Island in the Village of Bayville, NY. In accordance with USACE policies, the USACE will conduct a feasibility study to evaluate a range of structural and non-structural project alternatives. The following improvement measures would be considered: beach fill only, beach fill in combination with structures such as floodwalls, buried rubble-mound seawalls, dunes, stone revetments, interior drainage features, pump stations; and nonstructural measures such as relocations, buyouts, and flood proofing of threatened properties.

FOR FURTHER INFORMATION CONTACT: Questions about the proposed action and the DEIS can be answered by Ms. Megan B. Grubb, (212) 264–5759, U.S. Army Engineer District, New York Planning Division, ATTN: CENAN–PL–EA, 26 Federal Plaza, New York, NY 10278–0090.

SUPPLEMENTARY INFORMATION:

Project Location: This notice announces of the feasibility phase study for beach erosion control, storm damage reduction and related purposes along the north shore of Long Island at Bayville, NY. The study area extends from Long Island Sound on the north, Mill Neck Creek and Oyster Bay on the South, Centre Island on the east and the western boundary of the Village of Bayville on the west.

Project Authorization and History: The North Shore of Long Island, Village of Bayville, New York, Hurricane and Storm Damage Reduction Study was authorized by a resolution of the U.S.

House of Representatives Committee on Public Works and Transportation, adopted May 13, 1993. In response to the study resolution and a State request following the devastating coastal storm of December 1992, the USACE performed a Reconnaissance Study and issued a Reconnaissance Report in September 1995 that demonstrated potential Federal interest and the need for a more detailed feasibility study.

Project Need: The Long Island northern shoreline has historically experienced coastal erosion and related storm damage, most recently from the two storms of September 1996 and October 1996, and also from previous storms including the Christmas Eve 1994 storm, the March 1993 Blizzard of the Century, the December 1992 northeaster, Hurricane Danielle of September 1992 and the Halloween Storm of 1991. These storms caused evacuations in several north shore communities as well as damage from flooding and loss of structures from erosion. The December 1992 storm alone inundated hundreds of residential and business properties and caused damages estimated at $12,000,000. Approximately 300 families were evacuated and several sections of Bayville Avenue were impassable for days. The loss of beachfront in some areas now leaves the site increasingly vulnerable to severe damages even from moderate storms.

DEIS Scope: The intended DEIS will evaluate the potential environmental and cultural impacts associated with the purposed hurricane and storm damage reduction alternatives for the Village of Bayville, NY.

Public Involvement: The USACE intends to schedule an interagency meeting and public scoping meeting in spring/summer 2002 to discuss the scope of the DEIS and data gaps. The public scoping meeting place, date, and time will be advertised in advanced in local newspapers, and meeting announcement letters will be sent to interested parties. A scoping document will be made available at least one month before scheduled public scoping meeting date at the following locations:

(1) Bayville Free Library, 34 School Street, Nayville, NY 11709.

(2) Oyster Bay-East Norwich Public Library, 89 E. Main St., Oyster Bay, NY 11771.

The public will have an opportunity to provide written and oral comments at the public scoping meeting. Written comments may also be submitted via mail and should be directed to Ms. Megan B. Grubb at the address listed above under **FOR FURTHER INFORMATION CONTACT** heading. The USACE plans to issue the DEIS in Spring 2003. The USACE will announce availability of the draft in the **Federal Register** and other media, and will provide the public, organization, and agencies with the opportunity to submit comments, which will be addressed in the Final Environmental Impact Statement.

Luz D. Ortiz,

Army Federal Register Liaison Officer.

[FR Doc. 02–1146 Filed 1–15–02; 8:45 am]

BILLING CODE 3710–06–M

DEPARTMENT OF DEFENSE

Department of the Army; Corps of Engineers

Public Scoping Meeting for Va Shly'ay Akimel Salt River Restoration Project, Maricopa County, Arizona (Revised Date)

AGENCY: U.S. Army Corps of Engineers, DoD.

ACTION: Notice of meeting.

SUMMARY: The Los Angeles District intends to prepare an Environmental Impact Statement (EIS) to support the proposed study for the Salt River Pima-Maricopa Indian Community and the City of Mesa. A notice of ''Intent to Prepare a Draft Environmental Impact Statement for Va Shly'ay Akimel Salt River Restoration Project, Maricopa County, Arizona'' was previously published in the **Federal Register** (66 FR 55644, November 2, 2001). In that notice the Corps indicated that a public scoping meeting would be held some time in November 2001. Because of logistical considerations, the meeting was not held at that time. This notice provides information on the rescheduled meeting.

ADDRESSES: Commander, U.S. Army Corps of Engineers, Attn: Stephen Dibble, CESPL–PD–RN, Los Angeles District, Ecosystem Planning Section, P.O. Box 532711, Los Angeles, CA 90053–2325.

DATES: January 24, 2002, 6:00 PM, Scottsdale, AZ 85256.

FOR FURTHER INFORMATION CONTACT: Mr. Stephen Dibble, Environmental Manager, at (213) 452–3849. He can also be reached by e-mail at *ddibble@spl.usace.army.mil.*

SUPPLEMENTARY INFORMATION:

1. *Scoping Process:* The Corps will conduct a scoping meeting prior to preparing the Environmental Impact Statement to aid in determining the significant environmental issues associated with the proposed action. The public, as well as Federal, State, and local agencies are encouraged to participate in the scoping process by submitting data, information, and comments identifying relevant environmental and socioeconomic issues to be addressed in the environmental analysis. Useful information includes other environmental studies, published and unpublished data, alternatives that should be addressed in the analysis, and potential mitigation measures associated with the proposed action.

A public scoping meeting will be held in conjunction with the local sponsor to discuss the project scope and invite public participation in developing alternatives for the project. Individuals and agencies may offer information or data relevant to the environmental or socioeconomic impacts by attending the public scoping meeting, or by mailing the information to the above address.

2. *Public Scoping Meeting:* A public scoping meeting will be held on January 24, 2002 at 6:00 PM.

Location: Salt River Pima Maricopa Indian Community, Multi-purpose Building, 1880 N Longmore, Scottsdale, AZ 85256.

Luz D. Ortiz,

Army Federal Register Liaison Officer.

[FR Doc. 02–1149 Filed 1–15–02; 8:45 am]

BILLING CODE 3710–KF–M

DEPARTMENT OF EDUCATION

Submission for OMB Review; Comment Request

AGENCY: Department of Education.

SUMMARY: The Leader, Regulatory Information Management Group, Office of the Chief Information Officer invites comments on the submission for OMB review as required by the Paperwork Reduction Act of 1995.

DATES: Interested persons are invited to submit comments on or before February 15, 2002.

ADDRESSES: Written comments should be addressed to the Office of Information and Regulatory Affairs, Attention: Karen Lee, Desk Officer, Department of Education, Office of Management and Budget, 725 17th Street, NW., Room 10202, New Executive Office Building, Washington, DC 20503 or should be electronically mailed to the internet address *Karen_F._Lee@omb.eop.gov.*

SUPPLEMENTARY INFORMATION: Section 3506 of the Paperwork Reduction Act of 1995 (44 U.S.C. Chapter 35) requires that the Office of Management and Budget (OMB) provide interested

Federal agencies and the public an early opportunity to comment on information collection requests. OMB may amend or waive the requirement for public consultation to the extent that public participation in the approval process would defeat the purpose of the information collection, violate State or Federal law, or substantially interfere with any agency's ability to perform its statutory obligations. The Leader, Regulatory Information Management Group, Office of the Chief Information Officer, publishes that notice containing proposed information collection requests prior to submission of these requests to OMB. Each proposed information collection, grouped by office, contains the following: (1) Type of review requested, e.g. new, revision, extension, existing or reinstatement; (2) Title; (3) Summary of the collection; (4) Description of the need for, and proposed use of, the information; (5) Respondents and frequency of collection; and (6) Reporting and/or Recordkeeping burden. OMB invites public comment.

Dated: January 10, 2002.

John Tressler,

Leader, Regulatory Information Management, Office of the Chief Information Officer.

Office of the Undersecretary

Type of Review: Revision.

Title: Safe and Drug-Free Schools and Communities Act of the Governor's Report Forms.

Frequency: Annually.

Affected Public: State, Local, or Tribal Gov't, SEAs or LEAs.

Reporting and Recordkeeping Hour Burden: Responses: 56.

Burden Hours: 2,240.

Abstract: Section 4117 of the Safe and Drug-Free Schools and Communities Act (SDFSCA) requires state chief executive officers to submit to the Secretary on a triennial basis a report on the implementation and outcomes of Governor's SDFSCA programs. ED must report to the President and Congress regarding the national impact of SDFSCA programs.

Requests for copies of the proposed information collection request may be accessed from *http://edicsweb.ed.gov,* or should be addressed to Vivian Reese, Department of Education, 400 Maryland Avenue, SW., Room 4050, Regional Office Building 3, Washington, DC 20202–4651 or to the e-mail address *vivian.reese@ed.gov.* Requests may also be electronically mailed to the internet address *OCIO_RIMG@ed.gov* or faxed to 202–708–9346. Please specify the complete title of the information collection when making your request.

Comments regarding burden and/or the collection activity requirements should be directed to Kathy Axt at her internet address *Kathy.Axt@ed.gov.* Individuals who use a telecommunications device for the deaf (TDD) may call the Federal Information Relay Service (FIRS) at 1–800–877–8339.

[FR Doc. 02–1061 Filed 1–15–02; 8:45 am]

BILLING CODE 4000–01–P

DEPARTMENT OF EDUCATION

[CFDA Nos. 84.038, 84.033, and 84.007]

Student Financial Assistance; Federal Perkins Loan, Federal Work-Study, and Federal Supplemental Educational Opportunity Grant Programs

AGENCY: Department of Education.

ACTION: Notice of the closing date for institutions to file an Application for Approval to Participate in Federal Student Financial Aid Programs (ED Form E40–34P, OMB #1845–0012) to participate in the Federal Perkins Loan, Federal Work-Study, and Federal Supplemental Educational Opportunity Grant programs (known collectively as the campus-based programs) for the 2002–2003 award year.

SUMMARY: We invite currently non-participating institutions of higher education who filed a Fiscal Operations Report and Application to Participate (FISAP) (ED Form 646–1), to submit to the U.S. Department of Education (Department) an Application for Approval to Participate in Federal Student Financial Aid Programs. In order to participate in one or more of the campus-based programs for the 2002–2003 award year, non-participating institutions must submit an Application for Approval to Participate in Federal Student Financial Aid Programs and all required supporting documents for an eligibility and certification determination by the Department.

The campus-based programs are authorized by title IV of the Higher Education Act of 1965, as amended (HEA). The 2002–2003 award year is July 1, 2002, through June 30, 2003.

CLOSING DATE: To participate in the campus-based programs in the 2002–2003 award year, a currently non-participating institution must electronically submit its Application for Approval to Participate in Federal Student Financial Aid Programs on or before February 15, 2002. The application, along with all required supporting documents for an eligibility and certification determination, must be submitted to Case Management and Oversight at one of the addresses indicated below.

ADDRESSES: *Applications.* Paper applications are no longer being accepted. Electronic applications must be submitted through the ED website www.eligcert.ed.gov. Required supporting documents delivered by mail must be addressed to the U.S. Department of Education, Case Management and Oversight, Data Management and Analysis, Document Receipt and Control Center, P.O. Box 44805, L'Enfant Plaza Station, Washington DC 20026–4805.

Required Supporting Documents Delivered by Mail. An applicant must show proof of mailing consisting of one of the following: (1) A legibly dated U.S. Postal Service postmark; (2) a legible mail receipt with the date of mailing stamped by the U.S. Postal service; (3) a dated shipping label, invoice, or receipt from a commercial carrier; or (4) any other proof of mailing acceptable to us.

If documents are sent through the U.S. Postal Service, we do not accept either of the following as proof of mailing: (1) A private metered postmark, or (2) a mail receipt that is not dated by the U.S. Postal Service.

An applicant should note that the U.S. Postal Service does not uniformly provide a dated postmark. Before relying on this method, an applicant should check with its local post office.

An applicant is encouraged to use certified or at least first class mail. Institutions that submit an Application for Approval to Participate in Federal Student Financial Aid Programs and required supporting documents after the closing date of February 15, 2002, will not be considered for funding under the campus-based programs for award year 2002–2003.

Required Supporting Documents Delivered by Hand. An Application for Approval to Participate in Federal Student Financial Aid Programs must be submitted electronically through the ED website *www.eligcert.ed.gov.* Supporting documents delivered by hand must be taken to the U.S. Department of Education, Case Management and Oversight, Data Management and Analysis, Document Receipt and Control Center, 7th and D Streets, SW, Regional Office Building 3, (GSA Building), Room 5643, Washington, DC 20407. We will accept hand-delivered documents between 8:00 a.m. and 4:30 p.m. (Eastern time) daily, except Saturdays, Sundays, and Federal holidays. An Application for Approval

to Participate in Federal Student Financial Aid Programs for the 2002–2003 award year will not be accepted after 4:30 p.m. on February 15, 2002.

SUPPLEMENTARY INFORMATION: We allocate funds to eligible higher education institutions in each of the campus-based programs. We will not allocate funds under the campus-based programs for award year 2002–2003 to any currently non-participating institution unless the institution files its Application for Approval to Participate in Federal Student Financial Aid Programs and required supporting documents by the closing date. If the institution submits its Application for Approval to Participate in Federal Student Financial Aid Programs or other required supporting documents after the February 15, 2002 closing date, we will use this application in determining the institution's eligibility to participate in the campus-based programs beginning with the 2003–2004 award year.

For purposes of this notice, ineligible institutions include only:

(1) An institution that has not been designated as an eligible institution by the Department, but has previously filed a FISAP; or

(2) An additional location of an eligible institution that is currently not included in the Department's eligibility certification for that eligible institution, but has been included in the institution's 2002–2003 FISAP.

Applicable Regulations

The following regulations apply to the campus-based programs:

(1) Student Assistance General Provisions, 34 CFR part 668.

(2) General Provisions for the Federal Perkins Loan Program, Federal Work-Study Program, and Federal Supplemental Educational Opportunity Grant Program, 34 CFR part 673.

(3) Federal Perkins Loan Program, 34 CFR part 674.

(4) Federal Work-Study Program, 34 CFR part 675.

(5) Federal Supplemental Opportunity Grant Program, 34 CFR part 676.

(6) Institutional Eligibility Under the Higher Education Act of 1965, as amended, 34 CFR part 600.

(7) New Restrictions on Lobbying, 34 CFR part 82.

(8) Governmentwide Debarment and Suspension (Nonprocurement) and Governmentwide Requirements for Drug-Free Workplace (Grants), 34 CFR part 85.

(9) Drug-Free Schools and Campuses, 34 CFR part 86.

FOR FURTHER INFORMATION CONTACT: For information concerning designation of eligibility, contact the appropriate ED Case Management and Oversight (CMO) case management team by telephone, fax, or the Internet. The case management teams are listed with telephone and fax numbers and Internet addresses in the Application for Approval to Participate in Federal Student Financial Aid Programs on pages 5, 6, and 7 of the Introduction. For technical assistance concerning the FISAP or other operational procedures of the campus-based programs, contact: Sandra K. Donelson, Campus-Based Operations, telephone: (202) 377–3183, fax: (202) 275–3476 or via Internet: *Sandra.Donelson@ed.gov.*

If you use a telecommunications device for the deaf (TDD) you may call the Federal Information Relay Service (FIRS) at 1–800–877–8339.

Individuals with disabilities may obtain this document in an alternative format (*e.g.,* Braille, large print, audiotape, or computer diskette) by contacting the Alternate Format Center at (202) 260–9895 between 8:30 a.m. and 4:30 p.m., Eastern time, Monday through Friday.

Electronic Access to This Document

You may view this document, as well as all other Department of Education documents published in the **Federal Register**, in text or Adobe Portable Document Format (PDF) on the Internet at the following site: *www.ed.gov/legislation/FedRegister.*

To use PDF you must have the Adobe Acrobat Reader, which is available free at this site. If you have questions about using PDF, call the U.S. Government Printing Office (GPO), toll free at 1–888–293–6498; or in the Washington, DC, area at (202) 512–1530.

Note: The official version of this document is the document published in the **Federal Register**. Free Internet access to the official edition of the **Federal Register** and the Code of Federal Regulations is available on GPO Access at: *http://www.access.gpo.gov/nara/index.html.*

Program Authority: 20 U.S.C. 1087aa *et seq.*; 42 U.S.C. 2751 *et seq.*; and 20 U.S.C. 1070b *et seq.*

Dated: January 10, 2002.

Greg Woods,

Chief Operating Officer, Office of Student Financial Assistance.

[FR Doc. 02–1096 Filed 1–15–02; 8:45 am]

BILLING CODE 4000–01–P

DEPARTMENT OF ENERGY

Federal Energy Regulatory Commission

[Docket No. RP02–141–000]

Algonquin Gas Transmission Company; Notice of Proposed Changes in FERC Gas Tariff

January 10, 2002.

Take notice that on January 8, 2002, Algonquin Gas Transmission Company (Algonquin) tendered for filing as part of its FERC Gas Tariff, Fourth Revised Volume No. 1, the following tariff sheets proposed to be effective on February 7, 2002:

Second Revised Sheet No. 930
First Revised Sheet No. 931
First Revised Sheet No. 932
First Revised Sheet No. 933
First Revised Sheet No. 934
Second Revised Sheet No. 935

Algonquin states that the purpose of this filing is to modify the LINKr System Agreement contained in its tariff to: (1) Remove certain outdated provisions related to software needed to access Algonquin's LINKr Customer Interface System; (2) remove Algonquin LNG, Inc. as a party to the agreement; (3) add Egan Hub Partners, L.P. and Moss Bluff Hub Partners, L.P. as parties to the agreement; (4) add language that was inadvertently omitted from the agreement originally submitted for inclusion in the tariff; (5) provide that notices can be sent to any specified address instead of only to a post office address; and (6) reflect certain non-substantive changes.

Algonquin states that copies of its filing have been mailed to all affected customers and interested state commissions.

Any person desiring to be heard or to protest said filing should file a motion to intervene or a protest with the Federal Energy Regulatory Commission, 888 First Street, NE., Washington, DC 20426, in accordance with sections 385.214 or 385.211 of the Commission's rules and regulations. All such motions or protests must be filed in accordance with section 154.210 of the Commission's regulations. Protests will be considered by the Commission in determining the appropriate action to be taken, but will not serve to make protestants parties to the proceedings. Any person wishing to become a party must file a motion to intervene. Copies of this filing are on file with the Commission and are available for public inspection. This filing may also be viewed on the web at *http://www.ferc.gov* using the ''RIMS'' link,

select ''Docket#'' and follow the instructions (call 202–208–2222 for assistance). Comments, protests and interventions may be filed electronically via the Internet in lieu of paper. See, 18 CFR 385.2001(a)(1)(iii) and the instructions on the Commission's web site under the ''e-Filing'' link.

C.B. Spencer,

Acting Secretary.

[FR Doc. 02–1083 Filed 1–15–02; 8:45 am]

BILLING CODE 6717–01–P

DEPARTMENT OF ENERGY

Federal Energy Regulatory Commission

[Docket No. RP01–602–001]

Dominion Transmission, Inc.; Notice of Compliance Filing and Cancellation of Part 157 Service Agreements

January 10, 2002.

Take notice that on January 4, 2002, Dominion Transmission, Inc. (DTI) tendered for filing to be part of its FERC Gas Tariff, the revised tariff sheets listed below, with an effective date of January 1, 2002:

Third Revised Volume No. 1

Second Revised Sheet No. 8
Seventh Revised Sheet No. 1300

First Revised Volume No. 2

First Revised Sheet No. 7
First Revised Sheet No. 414–427
First Revised Sheet No. 469–483

DTI states that the filing is being filed in compliance with the letter order issued in the captioned proceedings on October 30, 2001.

In the letter order, the Commission approved the conversion of the individually certificated services that DTI has historically provided to Doswell Limited Partnership (Doswell) and Virginia Power Services Energy Corporation, Inc. (Virginia Power) to open access services under part 284 of the Commission's regulations. DTI explains that the Commission required DTI to advise the Commission of the effective date of the conversion and to file a tariff sheet listing the non-conforming agreements and notice of the cancellation of the individually certificated service agreements at that time.

DTI explains in its filing that the conversion of its services to Doswell and Virginia Power to part 284 service became effective on January 1, 2002.

DTI states that copies of its letter of transmittal and enclosures have been served upon DTI's customers and interested state commissions.

Any person desiring to protest said filing should file a protest with the Federal Energy Regulatory Commission, 888 First Street, NE., Washington, DC. 20426, in accordance with Section 385.211 of the Commission's Rules and Regulations. All such protests must be filed in accordance with section 154.210 of the Commission's Regulations. Protests will be considered by the Commission in determining the appropriate action to be taken, but will not serve to make protestants parties to the proceedings. Copies of this filing are on file with the Commission and are available for public inspection. This filing may also be viewed on the web at *http://www.ferc.gov* using the ''RIMS'' link, select ''Docket#'' and follow the instructions (call 202–208–2222 for assistance). Comments, protests and interventions may be filed electronically via the Internet in lieu of paper. See, 18 CFR 385.2001(a)(1)(iii) and the instructions on the Commission's web site under the ''e-Filing'' link.

C.B. Spencer,

Acting Secretary.

[FR Doc. 02–1077 Filed 1–15–02; 8:45 am]

BILLING CODE 6717–01–P

DEPARTMENT OF ENERGY

Federal Energy Regulatory Commission

[Docket No. CP01–80–002]

East Tennessee Natural Gas Company; Notice of Compliance Filing

January 10, 2002.

Take notice that on January 4, 2002, East Tennessee Natural Gas Company (East Tennessee) tendered for filing as part of its FERC Gas Tariff, Second Revised Volume No. 1, the following tariff sheets proposed to be effective February 1, 2002:

Twenty-third Revised Sheet No. 4
Second Revised Sheet No. 4A

East Tennessee states that the purpose of this filing is to comply with the Commission's October 11, 2001 Order that authorized East Tennessee to construct, own, operate and maintain certain pipeline facilities to provide firm transportation service to the Murray Project shippers at the proposed initial incremental FT–A recourse rate of $7.646 or, on a daily demand basis, $0.2514.

Any person desiring to protest said filing should file a protest with the Federal Energy Regulatory Commission, 888 First Street, NE., Washington, DC 20426, in accordance with Section 385.211 of the Commission's Rules and Regulations. All such protests must be filed in accordance with Section 154.210 of the Commission's Regulations. Protests will be considered by the Commission in determining the appropriate action to be taken, but will not serve to make protestants parties to the proceedings. Copies of this filing are on file with the Commission and are available for public inspection. This filing may also be viewed on the web at *http://www.ferc.gov* using the ''RIMS'' link, select ''Docket#'' and follow the instructions (call 202–208–2222 for assistance). Comments, protests and interventions may be filed electronically via the Internet in lieu of paper. See, 18 CFR 385.2001(a)(1)(iii) and the instructions on the Commission's web site under the ''e-Filing'' link.

C.B. Spencer,

Acting Secretary.

[FR Doc. 02–1076 Filed 1–15–02; 8:45 am]

BILLING CODE 6717–01–P

DEPARTMENT OF ENERGY

Federal Energy Regulatory Commission

[Docket No. RP02–138–000]

East Tennessee Natural Gas Company; Notice of Proposed Changes in FERC Gas Tariff

January 10, 2002.

Take notice that on January 8, 2002, East Tennessee Natural Gas Company (East Tennessee) tendered for filing as part of its FERC Gas Tariff, Second Revised Volume No. 1, the following tariff sheets, proposed to be effective on February 7, 2002:

Fourth Revised Sheet No. 266
Fourth Revised Sheet No. 267
Third Revised Sheet No. 269
Fourth Revised Sheet No. 270

East Tennessee states that the purpose of this filing is to modify the LINKr System Agreement contained in its tariff to: (1) Remove certain outdated provisions related to software needed to access East Tennessee's LINKr Customer Interface System; (2) add Egan Hub Partners, L.P. and Moss Bluff Hub Partners, L.P. as parties to the agreement; (3) provide that notices can be sent to any specified address instead of only to a post office address; and (4) reflect certain non-substantive changes.

East Tennessee states that copies of its filing have been mailed to all affected customers and interested state commissions.

Any person desiring to be heard or to protest said filing should file a motion to intervene or a protest with the

Federal Energy Regulatory Commission, 888 First Street, NE., Washington, DC 20426, in accordance with sections 385.214 or 385.211 of the Commission's Rules and Regulations. All such motions or protests must be filed in accordance with section 154.210 of the Commission's Regulations. Protests will be considered by the Commission in determining the appropriate action to be taken, but will not serve to make protestants parties to the proceedings. Any person wishing to become a party must file a motion to intervene. Copies of this filing are on file with the Commission and are available for public inspection. This filing may also be viewed on the Web at *http://www.ferc.gov* using the ''RIMS'' link, select ''Docket#'' and follow the instructions (call 202–208–2222 for assistance). Comments, protests and interventions may be filed electronically via the Internet in lieu of paper. *See*, 18 CFR 385.2001(a)(1)(iii) and the instructions on the Commission's Web site under the ''e-Filing'' link.

C.B. Spencer,

Acting Secretary.

[FR Doc. 02–1080 Filed 1–15–02; 8:45 am]

BILLING CODE 6717–01–P

DEPARTMENT OF ENERGY

Federal Energy Regulatory Commission

[Docket No. RP02–142–000]

Eastern Shore Natural Gas Company; Notice of Proposed Changes in FERC Gas Tariff

January 10, 2002.

Take notice that on January 8, 2002, Eastern Shore Natural Gas Company (ESNG) tendered for filing as part of its FERC Gas Tariff, Second Revised Volume No. 1, certain revised tariff sheets in the above captioned docket, bear a proposed effective date of February 1, 2002.

ESNG states that the purpose of this instant filing is to track rate changes attributable to storage services purchased from Columbia Gas Transmission Corporation (Columbia) under its Rate Schedules FSS and SST. The costs of the above referenced storage services comprise the rates and charges payable under ESNG's respective Rate Schedule CFSS. This tracking filing is being made pursuant to Section 3 of ESNG's Rate Schedule CFSS.

ESNG states that copies of the filing have been served upon its jurisdictional customers and interested State Commissions.

Any person desiring to be heard or to protest said filing should file a motion to intervene or a protest with the Federal Energy Regulatory Commission, 888 First Street, NE., Washington, DC 20426, in accordance with sections 385.214 or 385.211 of the Commission's rules and regulations. All such motions or protests must be filed in accordance with section 154.210 of the Commission's regulations. Protests will be considered by the Commission in determining the appropriate action to be taken, but will not serve to make protestants parties to the proceedings. Any person wishing to become a party must file a motion to intervene. Copies of this filing are on file with the Commission and are available for public inspection. This filing may also be viewed on the web at *http://www.ferc.gov* using the ''RIMS'' link, select ''Docket#'' and follow the instructions (call 202–208–2222 for assistance). Comments, protests and interventions may be filed electronically via the Internet in lieu of paper. See, 18 CFR 385.2001(a)(1)(iii) and the instructions on the Commission's web site under the ''e-Filing'' link.

C.B. Spencer,

Acting Secretary.

[FR Doc. 02–1084 Filed 1–15–02; 8:45 am]

BILLING CODE 6717–01–P

DEPARTMENT OF ENERGY

Federal Energy Regulatory Commission

[Docket No. RP02–135–000]

Iroquois Gas Transmission System, L.P.; Notice of Fuel Calculations

January 10, 2002.

Take notice that on December 31, 2001, Iroquois Gas Transmission System, L.P. (Iroquois) tendered for filing its schedules which reflect calculations supporting the Measurement Variance/Fuel Use Factors utilized by Iroquois during the period July 1, 2001 through December 31, 2001.

Iroquois states that data from the data base during this period had to be verified to ensure accurate and complete information. Iroquois states that the schedules attached to the filing include calculations supporting each of the following three components of Iroquois' composite Measurement Variance/Fuel Use Factor:

(1) Lost and unaccounted—for gas (Measurement Variance Factor);

(2) Fuel use associated with the transportation of gas by others on behalf of Iroquois (Account 858 Fuel Use Factor); and

(3) Fuel use associated with the transportation of gas on Iroquois' pipeline system (Account 854 Fuel Use Factor).

Any person desiring to be heard or to protest said filing should file a motion to intervene or a protest with the Federal Energy Regulatory Commission, 888 First Street, N.E., Washington, DC 20426, in accordance with sections 385.214 or 385.211 of the Commission's Rules and Regulations. All such motions or protests must be filed on or before January 17, 2002. Protests will be considered by the Commission in determining the appropriate action to be taken, but will not serve to make protestants parties to the proceedings. Any person wishing to become a party must file a motion to intervene. Copies of this filing are on file with the Commission and are available for public inspection in the Public Reference Room. This filing may also be viewed on the web at *http://www.ferc.gov* using the ''RIMS'' link, select ''Docket#'' and follow the instructions (call 202–208–2222 for assistance). Comments, protests and interventions may be filed electronically via the Internet in lieu of paper. See, 18 CFR 385.2001(a)(1)(iii) and the instructions on the Commission's web site under the ''e-Filing'' link.

C.B. Spencer,

Acting Secretary.

[FR Doc. 02–1079 Filed 1–15–02; 8:45 am]

BILLING CODE 6717–01–P

DEPARTMENT OF ENERGY

Federal Energy Regulatory Commission

[Docket No. RP02–140–000]

Maritimes & Northeast Pipeline, L.L.C.; Notice of Proposed Changes in FERC Gas Tariff

January 10, 2002.

Take notice that on January 8, 2002, Maritimes & Northeast Pipeline, L.L.C. (Maritimes) tendered for filing as part of its FERC Gas Tariff, First Revised Volume No. 1, the following tariff sheets proposed to be effective on February 7, 2002:

First Revised Sheet No. 480
First Revised Sheet No. 481
First Revised Sheet No. 482
First Revised Sheet No. 483
First Revised Sheet No. 484

Maritimes states that the purpose of this filing is to modify the LINKr System Agreement contained in its tariff to: (1) Remove certain outdated provisions related to software needed to access Maritimes' LINKr Customer Interface System; (2) add language that was inadvertently omitted from the agreement originally submitted for inclusion in the tariff; (3) provide that notices can be sent to any specified address instead of only to a post office address; and (4) reflect certain minor editorial changes.

Maritimes states that copies of its filing have been mailed to all affected customers and interested state commissions.

Any person desiring to be heard or to protest said filing should file a motion to intervene or a protest with the Federal Energy Regulatory Commission, 888 First Street, NE., Washington, DC 20426, in accordance with Sections 385.214 or 385.211 of the Commission's Rules and Regulations. All such motions or protests must be filed in accordance with Section 154.210 of the Commission's Regulations. Protests will be considered by the Commission in determining the appropriate action to be taken, but will not serve to make protestants parties to the proceedings. Any person wishing to become a party must file a motion to intervene. Copies of this filing are on file with the Commission and are available for public inspection. This filing may also be viewed on the Web at *http://www.ferc.gov* using the ''RIMS'' link, select ''Docket#'' and follow the instructions (call 202–208–2222 for assistance). Comments, protests and interventions may be filed electronically via the Internet in lieu of paper. *See*, 18 CFR 385.2001(a)(1)(iii) and the instructions on the Commission's Web site under the ''e-Filing'' link.

C.B. Spencer,

Acting Secretary.

[FR Doc. 02–1082 Filed 1–15–02; 8:45 am]

BILLING CODE 6717–01–P

DEPARTMENT OF ENERGY

Federal Energy Regulatory Commission

[Project No. 2016]

City of Tacoma; Notice of Authorization for Continued Project Operation

January 10, 2002.

On December 27, 1999, the City of Tacoma, licensee for the Cowlitz River Project No. 2016, filed an application for a new or subsequent license pursuant to the Federal Power Act (FPA) and the Commission's regulations thereunder. Project No. 2016 is located on the Cowlitz River in Lewis County, Washington.

The license for Project No. 2016 was issued for a period ending December 31, 2001. Section 15(a)(1) of the FPA, 16 U.S.C. 808(a)(1), requires the Commission, at the expiration of a license term, to issue from year to year an annual license to the then licensee under the terms and conditions of the prior license until a new license is issued, or the project is otherwise disposed of as provided in Section 15 or any other applicable section of the FPA. If the project's prior license waived the applicability of section 15 of the FPA, then, based on section 9(b) of the Administrative Procedure Act, 5 U.S.C. 558(c), and as set forth at 18 CFR 16.21(a), if the licensee of such project has filed an application for a subsequent license, the licensee may continue to operate the project in accordance with the terms and conditions of the license after the minor or minor part license expires, until the Commission acts on its application. If the licensee of such a project has not filed an application for a subsequent license, then it may be required, pursuant to 18 CFR 16.21(b), to continue project operations until the Commission issues someone else a license for the project or otherwise orders disposition of the project.

If the project is subject to section 15 of the FPA, notice is hereby given that an annual license for Project No. 2016 is issued to the City of Tacoma for a period effective January 1, 2002, through December 31, 2002, or until the issuance of a new license for the project or other disposition under the FPA, whichever comes first. If issuance of a new license (or other disposition) does not take place on or before January 1, 2003, notice is hereby given that, pursuant to 18 CFR 16.18(c), an annual license under section 15(a)(1) of the FPA is renewed automatically without further order or notice by the Commission, unless the Commission orders otherwise.

If the project is not subject to section 15 of the FPA, notice is hereby given that the City of Tacoma is authorized to continue operation of the Cowlitz River Project No. 2016 until such time as the Commission acts on its application for subsequent license.

C.B. Spencer,

Acting Secretary.

[FR Doc. 02–1086 Filed 1–15–02; 8:45 am]

BILLING CODE 6717–01–P

DEPARTMENT OF ENERGY

Federal Energy Regulatory Commission

[Docket No. RP02–139–000]

Texas Eastern Transmission, LP; Notice of Proposed Changes in FERC Gas Tariff

January 10, 2002.

Take notice that on January 8, 2002, Texas Eastern Transmission, LP (Texas Eastern) tendered for filing as part of its FERC Gas Tariff, Seventh Revised Volume No. 1, the following tariff sheets proposed to be effective on February 7, 2002:

First Revised Sheet No. 1071
First Revised Sheet No. 1072
First Revised Sheet No. 1074
First Revised Sheet No. 1075

Texas Eastern states that the purpose of this filing is to modify the LINKr System Agreement contained in its tariff to: (1) Remove certain outdated provisions related to software needed to access Texas Eastern's LINKr Customer Interface System; (2) add Egan Hub Partners, L.P. and Moss Bluff Hub Partners, L.P. as parties to the agreement; and (3) provide that notices can be sent to any specified address instead of only to a post office address.

Texas Eastern states that copies of its filing have been mailed to all affected customers and interested state commissions.

Any person desiring to be heard or to protest said filing should file a motion to intervene or a protest with the Federal Energy Regulatory Commission, 888 First Street, NE., Washington, DC 20426, in accordance with sections 385.214 or 385.211 of the Commission's Rules and Regulations. All such motions or protests must be filed in accordance with section 154.210 of the Commission's Regulations. Protests will be considered by the Commission in determining the appropriate action to be taken, but will not serve to make protestants parties to the proceedings. Any person wishing to become a party must file a motion to intervene. Copies of this filing are on file with the Commission and are available for public inspection. This filing may also be viewed on the Web at *http://www.ferc.gov* using the ''RIMS'' link, select ''Docket#'' and follow the instructions (call 202–208–2222 for assistance). Comments, protests and interventions may be filed electronically via the Internet in lieu of paper. *See,* 18 CFR 385.2001(a)(1)(iii) and the

instructions on the Commission's Web site under the ''e-Filing'' link.

C.B. Spencer,

Acting Secretary.

[FR Doc. 02–1081 Filed 1–15–02; 8:45 am]

BILLING CODE 6717–01–P

DEPARTMENT OF ENERGY

Federal Energy Regulatory Commission

[Docket No. RP02–33–001]

Wyoming Interstate Company, Ltd.; Notice of Compliance Filing

January 10, 2002.

Take notice that on January 4, 2002, Wyoming Interstate Company, Ltd. (WIC), tendered for filing as part of its FERC Gas Tariff, Second Revised Volume No. 2, Ninth Revised Sheet No. 4B, to become effective February 1, 2002.

WIC states that the tendered tariff sheet revises the fuel charges applicable to transportation service on WIC's system. The tariff sheet is proposed to become effective February 1, 2002.

Any person desiring to protest said filing should file a protest with the Federal Energy Regulatory Commission, 888 First Street, NE., Washington, DC 20426, in accordance with section 385.211 of the Commission's Rules and Regulations. All such protests must be filed in accordance with Section 154.210 of the Commission's Regulations. Protests will be considered by the Commission in determining the appropriate action to be taken, but will not serve to make protestants parties to the proceedings. Copies of this filing are on file with the Commission and are available for public inspection. This filing may also be viewed on the web at *http://www.ferc.gov* using the ''RIMS'' link, select ''Docket#'' and follow the instructions (call 202–208–2222 for assistance). Comments, protests and interventions may be filed electronically via the Internet in lieu of paper. See, 18 CFR 385.2001(a)(1)(iii) and the instructions on the Commission's web site under the ''e-Filing'' link.

C.B. Spencer,

Acting Secretary.

[FR Doc. 02–1078 Filed 1–15–02; 8:45 am]

BILLING CODE 6717–01–P

DEPARTMENT OF ENERGY

Federal Energy Regulatory Commission

[Docket No. ER91–569–019, et al.]

Entergy Services, Inc., et al.; Electric Rate and Corporate Regulation Filings

January 9, 2002.

Take notice that the following filings have been made with the Commission. Any comments should be submitted in accordance with Standard Paragraph E at the end of this notice.

1. Entergy Services, Inc.

[Docket No. ER91–569–019]

Take notice that on January 4, 2002, Entergy Services, Inc., on behalf of the five Entergy Operating Companies: Entergy Arkansas, Inc., Entergy Gulf States, Inc., Entergy Louisiana, Inc., Entergy Mississippi, Inc., and Entergy New Orleans, Inc. (together Entergy), submits this compliance filing in response to the Commission's November 20, 2001 Order in the above-captioned docket. A copy of this filing has been served upon the state regulators of the Entergy operating companies.

Comment Date: January 25, 2002.

2. Southern Company Energy Marketing L.P.

[Docket No. ER97–4166–011]

Take notice that on January 4, 2002, Southern Company Services, Inc. acting as agent for Alabama Power Company, Georgia Power Company, Gulf Power Company, Mississippi Power Company, and Savannah Electric and Power Company, submitted a compliance filing with the Federal Energy Regulatory Commission (Commission) in response to the Commission's directions in the above referenced docket.

Comment Date: January 25, 2002.

3. AEP Power Marketing, Inc., AEP Service Corporation, CSW Power Marketing, Inc., CSW Energy Services, Inc., Central and South West Services, Inc.

[Docket Nos. ER96–2495–017; ER97–4143–005; ER97–1238–012; ER98–2075–011; ER98–542–007]

Take notice that on January 4, 2002, American Electric Power Service Corporation (AEPSC), on behalf of itself and its affiliated power marketers, submits a report of its compliance in connection with the Commission's November 20, 2001 Order and December 20, 2001 Notice Delaying Effective Date of Mitigation and Announcing Technical Conference issued in the above-referenced dockets.

Comment Date: January 25, 2002.

4. Frederickson Power L.P.

[Docket No. ER01–2262–001]

Take notice that on January 4, 2002, Frederickson Power L.P. filed with the Federal Energy Regulatory Commission (Commission) an amendment to the application for authority to sell electric energy and capacity at market-based rates filed by it on June 8, 2001.

Comment Date: January 25, 2002.

5. Select Energy New York, Inc.

[Docket No. ER02–556–000]

Take notice that on December 13, 2001, Niagara Mohawk Energy Marketing, Inc., changed it name to Select Energy New York, Inc. Accordingly, Select Energy New York, Inc. is filing a Notice of Succession, with the Federal Energy Regulatory Commission's regulations 18 CFR parts 35.16 and 131.51.

Comment Date: January 22, 2002.

6. Florida Power & Light Company

[Docket No. ER02–696–000]

Take notice that on January 4, 2002 Florida Power & Light Company (FPL) tendered for filing a proposed service agreement with Georgia Transmission Corporation for Long-Term Firm transmission service under FPL's Open Access Transmission Tariff.

FPL requests that the proposed service agreement become effective on January 1, 2002.

Comment Date: January 25, 2002.

7. Ameren Energy, Inc. on behalf of Union Electric Company d/b/a AmerenUE and Ameren Energy Generating Company

[Docket No. ER02–697–000]

Take notice that on January 4, 2002, Ameren Energy, Inc. (Ameren Energy), on behalf of Union Electric Company d/b/a AmerenUE and Ameren Energy Generating Company (collectively, the Ameren Parties), pursuant to section 205 of the Federal Power Act, 16 U.S.C. 824d, and the market rate authority granted to the Ameren Parties, submitted for filing umbrella power sales service agreements under the Ameren Parties' market rate authorizations entered into with *Duke Energy Trading and Marketing, L.L.C.* Ameren Energy seeks Commission acceptance of these service agreements effective November 20, 2001.

Copies of this filing were served on the public utilities commissions of Illinois and Missouri and the respective counterparty.

Comment Date: January 25, 2002.

8. Pleasants Energy, LLC

[Docket No. ER02–698–000]

Take notice that on January 4, 2002, Pleasants Energy, LLC tendered for filing with the Federal Energy Regulatory Commission (Commission) a Power Purchase Agreement between Pleasants Energy, LLC and Dominion Nuclear Marketing I, Inc. and Dominion Nuclear Marketing II, Inc. The agreement is filed pursuant to Pleasants Energy's market based rate tariff, FERC Electric Tariff, Original Volume No. 1 (the Tariff) granted by the Commission by letter order dated December 6, 2001. Pleasants Energy, LLC requests an effective date for the agreement of December 5, 2001.

Copies of the filing were served upon the the Public Service Commission of West Virginia, the Virginia State Corporation Commission, and the North Carolina Utilities Commission.

Comment Date: January 25, 2002.

9. Constellation Power Source Maine, LLC

[Docket No. ER02–699–000]

Take notice that on January 4, 2002, Constellation Power Source Maine, LLC submitted for filing, pursuant to section 205 of the Federal Power Act, and part 35 of the Federal Energy Regulatory Commission's (Commission) regulations, a Petition for authorization to make sales of capacity, energy, and certain Ancillary Services at market-based rates, to reassign transmission capacity, to resell Firm Transmission Rights, and for certain waivers and blanket authorizations of the Commission's regulations typically granted to entities with market-based rate authorizations.

Comment Date: January 25, 2002.

10. Florida Power & Light Company

[Docket Nos. ER02–700–000]

Take notice that on January 4, 2002, Florida Power & Light Company (FPL) filed with the Federal Energy Regulatory Commission (Commission) an unexecuted Interconnection and Operation Agreement between FPL and PG&E Okeechobee Generating Company, LLC (PG&E Okeechobee) that sets forth the terms and conditions governing the interconnection between PG&E Okeechobee's generating project and FPL's transmission system. A copy of this filing has been served on PG&E Okeechobee and the Florida Public Service Commission.

Comment Date: January 25, 2002.

Standard Paragraph

E. Any person desiring to be heard or to protest such filing should file a motion to intervene or protest with the Federal Energy Regulatory Commission, 888 First Street, NE., Washington, DC 20426, in accordance with rules 211 and 214 of the Commission's rules of practice and procedure (18 CFR parts 385.211 and 385.214). All such motions or protests should be filed on or before the comment date. Protests will be considered by the Commission in determining the appropriate action to be taken, but will not serve to make protestants parties to the proceeding. Any person wishing to become a party must file a motion to intervene. Copies of this filing are on file with the Commission and are available for public inspection. This filing may also be viewed on the web at *http://www.ferc.gov* using the ''RIMS'' link, select ''Docket#'' and follow the instructions (call 202–208–2222 for assistance). Comments, protests and interventions may be filed electronically via the Internet in lieu of paper. See, 18 CFR part 385.2001(a)(1)(iii) and the instructions on the Commission's web site under the ''e-Filing'' link.

C.B. Spencer,

Acting Secretary.

[FR Doc. 02–1062 Filed 1–15–02; 8:45 am]

BILLING CODE 6717–01–P

DEPARTMENT OF ENERGY

Federal Energy Regulatory Commission

[Project Nos. 11516–000, 11120–002, and 11300–000—Michigan]

Commonwealth Power Company; Notice of Availability of Final Environmental Assessment

January 10, 2002.

In accordance with the National Environmental Policy Act of 1969 and the Federal Energy Regulatory Commission's (Commission) regulations, 18 CFR part 380 (Order No. 486, 52 FR 47897), the Office of Energy Projects has reviewed the application for license for the Irving, Middleville and LaBarge Hydroelectric Projects, located on the Thornapple River in Barry and Kent Counties, Michigan, and has prepared a Final Environmental Assessment (FEA) for the projects. No federal lands are occupied by the projects.

On March 29, 2001, the Commission staff issued a draft Environmental Assessment (EA) for the Irving, Middleville and LaBarge Hydroelectric Projects and requested that any comments be filed within 45 days. Comments were filed by three entities and are addressed in the final EA.

The FEA contains the staff's analysis of the potential environmental effects of the project and concludes that licensing the project, with appropriate environmental protective measures, would not constitute a major federal action that would significantly affect the quality of the human environment.

A copy of the FEA is on file with the Commission and is available for public inspection. The FEA may also be viewed on the web at *http://www.ferc.gov* using the ''RIMS'' link—select ''Docket#'' and follow the instructions (call 202–208–2222 for assistance).

For further information, contact Mark Pawlowski at (202) 219–2795.

C.B. Spencer,

Acting Secretary.

[FR Doc. 02–1085 Filed 1–15–02; 8:45 am]

BILLING CODE 6717–01–P

DEPARTMENT OF ENERGY

Federal Energy Regulatory Commission

Notice of Application Tendered for Filing With the Commission, Soliciting Additional Study Requests, and Establishing Procedures for Relicensing and a Deadline for Submission of Final Amendments

January 10, 2002.

Take notice that the following hydroelectric application has been filed with the Commission and is available for public inspection.

a. *Type of Application:* New Major License.

b. *Project No.:* 5334.

c. *Date Filed:* October 2, 2001.

d. *Applicant:* Charter Township of Ypsilanti.

e. *Name of Project:* Ford Lake Hydroelectric Station.

f. *Location:* On the Huron River, Washtenaw County, within the township of Ypsilanti, MI. The project does not affect Federal lands.

g. *Filed Pursuant to:* Federal Power Act 16 U.S.C. 791 (a)–825(r).

h. *Applicant Contact:* Ms. Joann Brinker, Administrative Services/Human Resources Director, Charter Township of Ypsilanti, 7200 South Huron River Drive, Ypsilanti, MI 48197, (734) 484–0065.

i. *FERC Contact:* Monte TerHaar, (202) 219–2768 or *monte.terhaar@ferc.fed.us.*

j. *Deadline for filing additional study requests:* 60 days from issuance date of this notice.

All documents (original and eight copies) should be filed with: Secretary,

Federal Energy Regulatory Commission, 888 First Street, NE, Washington, DC 20426.

The Commission's Rules of Practice require all intervenors filing documents with the Commission to serve a copy of that document on each person on the official service list for the project. Further, if an intervenor files comments or documents with the Commission relating to the merits of an issue that may affect the responsibilities of a particular resource agency, they must also serve a copy of the document on that resource agency.

k. This application is not ready for environmental analysis at this time. We are not requesting intervenors to this project at this time.

l. The existing Ford Lake Hydroelectric Project consists of: (1) A 1,050 acre reservoir; (2) a 110-foot-long earth embankment dam; (3) a 46.5-foot powerhouse with 2 hydroelectric turbines; (4) a 172-foot-long spillway with six bays, each with a 6-foot by 8-foot sluice gate; (5) a 380-foot-long earth embankment; (6) a 175-foot-long emergency spillway; (7) two vertical shaft turbine/generator units with an installed capacity of 1,920 kilowatts at normal pool elevation; and (8) appurtenant facilities. The project operates run-of-river with a normal reservoir elevation maintained between 684.4 and 684.9 feet M.S.L. Average annual generation between 1995 and 2000 has been 8,664 megawatthours. Generated power is sold to Detroit Power. No new facilities are proposed.

m. A copy of the application is available for inspection and reproduction at the Commission's Public Reference Room, located at 888 First Street, NE, Room 2–A, Washington, DC 20426, or by calling (202) 208–1371. The application may be viewed on http://www.ferc.fed.us/online/rims.htm (call (202) 208–2222 for assistance). A copy is also available for inspection and reproduction at the address in item h above.

n. With this notice, we are initiating consultation with the *Michigan State Historic Preservation Officer (SHPO)*, as required by § 106, National Historic Preservation Act, and the regulations of the Advisory Council on Historic Preservation, 36, CFR, at § 800.4.

o. Procedural schedule and final amendments: The application will be processed according to the following milestones, some of which may be combined to expedite processing:

Notice of application has been accepted for filing
Notice of NEPA Scoping
Notice of application is ready for environmental analysis
Notice soliciting final terms and conditions
Notice of the availability of the draft NEPA document (draft EA)
Notice of the availability of the final NEPA document (final EA)
Order issuing the Commission's decision on the application

Final amendments to the application must be filed with the Commission no later than 30 days from the issuance date of the notice of ready for environmental analysis.

C.B. Spencer,

Acting Secretary.

[FR Doc. 02–1087 Filed 1–15–02; 8:45 am]

BILLING CODE 6717–01–P

DEPARTMENT OF ENERGY

Federal Energy Regulatory Commission

Notice of Technical Conference

January 9, 2002.

In the matter of: Docket Nos. RM01–12–000, RT01–2–001, RT01–10–000, RT01–15–000, RT01–34–000, RT01–35–000, RT01–67–000, RT01–74–000, RT01–75–000, RT01–77–000, RT01–85–000, RT01–86–000, RT01–87–000, RT01–88–000, RT01–94–000, RT01–95–000, RT01–98–000, RT01–99–000, RT01–100–000, RT02–1–000, EL02–9–000; Electricity Market Design and Structure, PJM Interconnection, L.L.C., Allegheny Electric Cooperative, Inc., Atlantic City Electric Company, Baltimore Gas & Electric Company, Delmarva Power & Light Company, Jersey Central Power & Light Company, Metropolitan Edison Company, PECO Energy Company, Pennsylvania Electric Company, PPL Electric Utilities Corporation, Potomac Electric Power Company, Public Service Electric & Gas Company, UGI Utilities Inc., Allegheny Power, Avista Corporation, Montana Power Company, Nevada Power Company, Portland General Electric Company, Puget Sound Energy, Inc., Sierra Pacific Power Company, Southwest Power Pool, Inc., Avista Corporation, Bonneville Power Administration, Idaho Power Company, Montana Power Company, Nevada Power Company, PacifiCorp, Portland General Electric Company, Puget Sound Energy, Inc., Sierra Pacific Power Company, GridFlorida LLC, Florida Power & Light Company, Florida Power Corporation, Tampa Electric Company, Carolina Power & Light Company, Duke Energy Corporation, South Carolina Electric & Gas Company, GridSouth Transco, LLC, Entergy Services, Inc., Southern Company Services, Inc., California Independent System Operator Corporation, Bangor Hydro-Electric Company, Central Maine Power Company, National Grid USA, Northeast Utilities Service Company, The United Illuminating Company, Vermont Electric Power Company, ISO New England Inc., Midwest Independent System Operator, Alliance Companies, NSTAR Services Company, New York Independent System Operator, Inc., Central Hudson Gas & Electric Corporation, Consolidated Edison Company of New York, Inc. Niagara Mohawk Power Corporation, New York State Electric & Gas Corporation, Orange & Rockland Utilities, Inc., Rochester Gas & Electric Corporation, PJM Interconnection, L.L.C., Regional Transmission Organizations, Regional Transmission Organizations, Arizona Public Service Company, El Paso Electric Company, Public Service Company of New Mexico, Tucson Electric Power Company, WestConnect RTO, LLC.

Take notice that a technical conference will be held on January 22–23, 2002, from approximately 9:30 a.m. to 4:30 p.m., in a room to be designated at the offices of the Federal Energy Regulatory Commission, 888 First Street, NE., Washington, DC. The goals of the conference will be to gain a mutual understanding of similarities and differences between various market designs and to allow participants to provide further detail on market operations. Members of the Commission will attend the conference and participate in the discussions. All interested persons may attend.

The Commission is inviting selected panelists on these topics to participate in these workshops; it is not at this time entertaining requests to make presentations. There will be ample opportunity for non-panelists to submit comments in the above dockets. Additional details about the workshops will be provided in a subsequent notice, and will be posted on the Commission's web site under RTO Activities. For additional information about the conference, please contact Saida Shaalan at (202) 208–0278.

C.B. Spencer,

Acting Secretary.

[FR Doc. 02–1075 Filed 1–15–02; 8:45 am]

BILLING CODE 6717–01–P

ENVIRONMENTAL PROTECTION AGENCY

[OPP–341399D; FRL–6814–7]

Organophosphate Pesticides; Availability of Terbufos Interim Risk Management Decision Documents

AGENCY: Environmental Protection Agency (EPA).

ACTION: Notice.

SUMMARY: This notices announces the availability of the interim risk management decision document for terbufos. In addition, this notice starts a 60–day public participation period during which the public is encouraged to submit comments on the terbufos

interim risk management decision document. This decision document has been developed as part of the public participation process that EPA and the U.S. Department of Agriculture (USDA) are now using for involving the public in the reassessment of pesticide tolerances under the Food Quality Protection Act (FQPA), and the reregistration of individual organophosphate pesticides under the Federal Insecticide, Fungicide, and Rodenticide Act (FIFRA).

DATES: The interim risk management decision documents are available under docket control number OPP–341399D.

FOR FURTHER INFORMATION CONTACT: Eric Olson, Special Review and Reregistration Division (7508C), Office of Pesticide Programs, Environmental Protection Agency, 1200 Pennsylvania Ave., NW., Washington, DC 20460; telephone number: (703) 308–8067; e-mail address: olson.eric@gov.

SUPPLEMENTARY INFORMATION:

I. General Information

A. Does this Action Apply to Me?

This action is directed to the public in general, nevertheless, a wide range of stakeholders will be interested in obtaining the interim risk management decision documents for terbufos, including environmental, human health, and agricultural advocates; the chemical industry; pesticide users; and members of the public interested in the use of pesticides on food. Since other entities also may be interested, the Agency has not attempted to describe all the specific entities that may be affected by this action. If you have any questions regarding the applicability of this action to a particular entity, consult the person listed under **FOR FURTHER INFORMATION CONTACT**.

B. How Can I Get Additional Information, Including Copies of this Document and Other Related Documents?

1. *Electronically*. You may obtain electronic copies of this document, and certain other related documents that might be available electronically, from the EPA Internet Home Page at http://www.epa.gov/. On the Home Page select ''Laws and Regulations,'' ''Regulations and Proposed Rules,'' and then look up the entry for this document under the ''**Federal Register**—Environmental Documents.'' You can also go directly to the **Federal Register** listings at http://www.epa.gov/fedrgstr/. In addition, copies of the pesticide interim risk management decision documents released to the public may also be accessed at http://www.epa.gov/pesticides/reregistration/status.htm.

2. *In person*. The Agency has established an official record for this action under docket control number OPP–341399D. The official record consists of the documents specifically referenced in this action, and other information related to this action, including any information claimed as Confidential Business Information (CBI). This official record includes the documents that are physically located in the docket, as well as the documents that are referenced in those documents. The public version of the official record does not include any information claimed as CBI. The public version of the official record, which includes printed, paper versions of any electronic comments submitted during an applicable comment period is available for inspection in the Public Information and Records Integrity Branch (PIRIB), Rm. 119, Crystal Mall #2, 1921 Jefferson Davis Hwy., Arlington, VA, from 8:30 a.m. to 4 p.m., Monday through Friday, excluding legal holidays. The PIRIB telephone number is (703) 305–5805.

II. What Action is the Agency Taking?

EPA has assessed the risks of terbufos and reached an Interim Reregistration Eligibility Decision (IRED) for this organophosphate pesticide. Provided that risk mitigation measures are adopted, terbufos fits into its own risk cup its individual, aggregate risks are within acceptable levels. Used on corn, sorghum, and sugar beets, terbufos residues in food and drinking water do not pose risk concerns with the implementation of certain risk mitigation measures. Terbufos has no residential uses. With other risk reduction measures, worker and ecological risks also will be substantially reduced.

The interim risk management decision documents for terbufos were made through the organophosphate pesticide pilot public participation process, which increases transparency and maximizes stakeholder involvement in EPA's development of risk assessments and risk management decisions. The pilot public participation process was developed as part of the EPA-USDA Tolerance Reassessment Advisory Committee (TRAC), which was established in April 1998, as a subcommittee under the auspices of EPA's National Advisory Council for Environmental Policy and Technology. A goal of the pilot public participation process is to find a more effective way for the public to participate at critical junctures in the Agency's development of organophosphate pesticide risk assessments and risk management decisions. EPA and USDA began implementing this pilot process in August 1998, to increase transparency and opportunities for stakeholder consultation.

EPA worked extensively with affected parties to reach the decisions presented in the interim risk management decision documents, which conclude the pilot public participation process for terbufos. As part of the pilot public participation process, numerous opportunities for public comment were offered as these interim risk management decision documents were being developed. There will also be a 60–day comment period on the interim reregistration eligibility decision and the docket will remain open after this period for any comments submitted to the Agency.

The risk assessments for terbufos were released to the public through a notice published in the **Federal Register** of August 12, 1998 (63 FR 43175) (FRL–6024–5), and September 1, 1999 (64 FR 34195) (FRL–6099–9).

EPA's next step under FQPA is to complete a cumulative risk assessment and risk management decision for the organophosphate pesticides, which share a common mechanism of toxicity. The interim risk management decision documents on terbufos cannot be considered final until this cumulative assessment is complete. When the cumulative risk assessment for the organophosphate pesticides has been completed, EPA will issue its final tolerance reassessment decision(s) for terbufos and further risk mitigation measures may be needed.

List of Subjects

Environmental protection, Chemicals, Pesticides and pests.

Dated: January 4, 2002.

Lois A. Rossi,

Director, Special Review and Reregistration Division, Office of Pesticide Programs.

[FR Doc. 02–1121 Filed 1–15–02; 8:45 am]

BILLING CODE 6560–50–S

ENVIRONMENTAL PROTECTION AGENCY

[OPP–00658B; FRL–6814–3]

Pesticides; Guidance on Cumulative Risk Assessment of Pesticide Chemicals That Have a Common Mechanism of Toxicity

AGENCY: Environmental Protection Agency (EPA).

ACTION: Notice of availability.

SUMMARY: EPA announces the availability of the revised version of the pesticide science policy document entitled ''Guidance on Cumulative Risk Assessment of Pesticide Chemicals That Have a Common Mechanism of Toxicity.'' This notice is one in a series of science policy documents related to the implementation of the Federal Food, Drug, and Cosmetic Act (FFDCA), as amended by the Food Quality Protection Act of 1996 (FQPA).

FOR FURTHER INFORMATION CONTACT: Beth Doyle, Environmental Protection Agency (7503C), 1200 Pennsylvania Ave., NW., Washington, DC 20460; telephone number: (703) 305–2722; fax number: (703) 305–0871; e-mail address: doyle.elizabeth@epa.gov.

SUPPLEMENTARY INFORMATION:

I. General Information

A. Does this Action Apply to Me?

You may be potentially affected by this action if you manufacture or formulate pesticides. Potentially affected categories and entities may include, but are not limited to:

Categories	NAICS	Examples of potentially affected entities
Pesticide Producers	32532	Pesticide manufacturers Pesticide formulators

This listing is not intended to be exhaustive, but rather provides a guide for readers regarding entities likely to be affected by this action. Other types of entities not listed could also be affected. The North American Industrial Classification System (NAICS) codes have been provided to assist you and others in determining whether or not this notice affects certain entities. If you have any questions regarding the applicability of this action to a particular entity, consult the person listed under **FOR FURTHER INFORMATION CONTACT**.

B. How Can I Get Additional Information, Including Copies of this Document or Other Related Documents?

1. *Electronically*. You may obtain electronic copies of this document, the science policy documents, and certain other related documents that might be available from the Office of Pesticide Programs' Home Page at http://www.epa.gov/pesticides. On the Office of Pesticide Programs' Home Page select ''FQPA'' and then look up the entry for this document under ''Science Policies.'' You can also go directly to the listings at the EPA Home page at http://www.epa.gov. On the Home Page select ''Laws and Regulations,'' ''Regulations and Proposed Rules,'' and then look up the entry to this document under ''**Federal Register**—Environmental Documents.'' You can go directly to the **Federal Register** listings at http://www.epa.gov/fedrgstr.

2. *In person*. The Agency has established an official record for this action under docket control number OPP–00658B. In addition, the documents referenced in the framework notice, which published in the **Federal Register** on October 29, 1998 (63 FR 58038) (FRL–6041–5) under docket control number OPP–00557, are considered as part of the official record for this action under docket control number OPP–00658B even though not placed in the official record. The official record consists of the documents specifically referenced in this action, and other information related to this action, including any information claimed as Confidential Business Information (CBI). This official record includes the documents that are physically located in the docket, as well as the documents that are referenced in those documents. The public version of the official record does not include any information claimed as CBI. The public version of the official record, which includes printed, paper versions of any electronic comments submitted during an applicable comment period is available for inspection in the Public Information and Records Integrity Branch (PIRIB), Rm. 119, Crystal Mall #2, 1921 Jefferson Davis Hwy., Arlington, VA, from 8:30 a.m. to 4 p.m., Monday through Friday, excluding legal holidays. The PIRIB telephone number is (703) 305–5805.

II. Background Information

On August 3, 1996, FQPA was signed into law. The FQPA significantly amended the Federal Insecticide, Fungicide, and Rodenticide Act (FIFRA) and FFDCA. Among other changes, FQPA established a stringent health-based standard (''a reasonable certainty of no harm'') for pesticide residues in foods to assure protection from unacceptable pesticide exposure and strengthened health protections for infants and children from pesticide risks.

Thereafter, the Agency established the Food Safety Advisory Committee (FSAC) as a subcommittee of the National Advisory Council for Environmental Policy and Technology (NACEPT) to assist in soliciting input from stakeholders and to provide input to EPA on the broad policy choices facing the Agency and on strategic direction for the Office of Pesticide Programs (OPP). The Agency has used the interim approaches developed through discussions with FSAC to make regulatory decisions that meet the new FFDCA standard, but that could be revisited if additional information became available or as the science evolved. In addition, the Agency seeks independent review and public participation, generally through presentation of the science policy issues to the FIFRA Scientific Advisory Panel (SAP), a group of independent, outside experts who provide peer review and scientific advice to OPP.

During 1998 and 1999, EPA and the U.S. Department of Agriculture (USDA) established a second subcommittee of NACEPT, the Tolerance Reassessment Advisory Committee (TRAC) to address FFDCA issues and implementation. TRAC comprised more than 50 representatives of affected user, producer, consumer, public health, environmental, states, and other interested groups. The TRAC met from May 27, 1998, through April 29, 1999.

In order to continue the constructive discussions about FFDCA, EPA and USDA have established, under the auspices of NACEPT, the Committee to Advise on Reassessment and Transition (CARAT). The CARAT provides a forum for a broad spectrum of stakeholders to consult with and advise the Agency and the Secretary of Agriculture on pest and pesticide management transition issues related to the tolerance reassessment process. The CARAT is intended to further the valuable work initiated by the FSAC and TRAC toward the use of sound science and greater transparency in regulatory decisionmaking, increased stakeholder participation, and reasonable transition strategies that reduce risks without jeopardizing American agriculture and farm communities.

As a result of the 1998 and 1999 TRAC process, EPA decided that the implementation process and related policies would benefit from providing notice and comment on major science policy issues. The TRAC identified nine science policy areas it believed were key to implementation of tolerance reassessment. EPA agreed to provide one or more documents for comment on each of the nine issues by announcing their availability in the **Federal Register**. In a notice published in the **Federal Register** of October 29, 1998 (63 FR 58038) (FRL–6041–5), EPA described its intended approach. Since then, EPA has been issuing a series of draft documents concerning the nine science policy issues. This notice announces the availability of the revised science policy

document concerning cumulative risk assessment.

III. Summary of ''Guidance on Cumulative Risk Assessment of Pesticide Chemicals That Have a Common Mechanism of Toxicity''

In assessing the potential health risks associated with exposure to pesticides, attention has historically focused on single pathways of exposure (e.g., from pesticide residues in food, water, or residential/nonoccupational uses) for individual chemicals, and not on the potential for individuals to be exposed to multiple pesticides by all pathways concurrently. In 1996, FQPA modified FFDCA to require OPP to consider potential human health risks from all pathways of dietary and nondietary exposures to more than one pesticide acting through a common mechanism of toxicity. This document provides guidance to OPP scientists for evaluating and estimating the potential human risks associated with such multichemical and multipathway exposures to pesticides. This process is referred to as cumulative risk assessment.

The current guidance has been revised in light of review and comment offered by the public on an earlier draft version during the public comment period of June through September 2000 (USEPA, 2000a) (65 FR 40644, June 30, 2000 (FRL–6556–4) and 65 FR 50526, August 18, 2000 (FRL–6739–3)), by the SAP in September and December 1999, and by comments offered by other external parties at the SAP meetings. Furthermore, OPP has gained experience in applying the principles of the draft guidance itself with actual datasets on pesticides that share a common mechanism of toxicity. A pilot analysis was presented to the SAP on 24 organophosphorus pesticides illustrating the hazard and dose-response guidance in September 2000, and on the exposure assessment and risk characterization process in December 2000. The SAP comments on this pilot analysis have also led to refinements in the process of conducting cumulative risk assessments.

Cumulative risk assessments will play a significant role in the evaluation of risks posed by pesticides, and will enable OPP to make regulatory decisions that more fully protect public health and sensitive subpopulations, including infants and children. The cumulative assessment of risks posed by exposure to multiple chemicals by multiple pathways (including food, drinking water, and residential/nonoccupational exposure to air, soil, grass, and indoor surfaces) presents a formidable challenge for OPP. This guidance takes into account the knowledge and methods available now for assessing cumulative risk, and provides flexibility for addressing a variety of data situations. Because methods and knowledge are expected to continue to evolve in this area, OPP will update specific procedures with peer-reviewed supplementary technical documentation as needed. Further revision of the guidance itself will take place when extensive changes are necessary.

Before undertaking a cumulative risk assessment on pesticides sharing a common mechanism of toxicity, OPP will typically perform an aggregate risk assessment for each chemical in the common-mechanism group. When conducting aggregate assessments, OPP will follow the guidance described in the document entitled ''Guidance for Performing Aggregate Exposure and Risk Assessments'' (USEPA, 1999b), dated November 16, 2001 (66 FR 59428, November 28, 2001) (FRL–6792–8). Using this guidance, OPP will simultaneously consider the exposures from food, drinking water, and residential/non-occupational uses of each pesticide. When the aggregate risk assessments are completed for individual chemicals that share a common mechanism of toxicity, OPP will perform the cumulative risk assessment in the steps summarized below.

A cumulative risk assessment begins with the identification of a group of chemicals, a common mechanism group (CMG), that induce a common toxic effect by a common mechanism of toxicity. OPP will follow the framework for identifying the chemicals that belong in that group (see ''Guidance for Identifying Pesticide Chemicals and Other Substances That Have a Common Mechanism of Toxicity,'' USEPA, 1999a (64 FR 5796, February 5, 1999) (FRL–6060–7)). Once a CMG has been established, the next step is to evaluate registered and proposed uses for each CMG member in order to identify potential exposure pathways (i.e., food, drinking water, residential) and routes (i.e., oral, inhalation, dermal). During the hazard characterization phase, the various endpoints associated with the common mechanism of toxicity are identified, as well as the test species/sex that might serve as a uniform basis for determining relative potencies among the chemicals of interest. The common effect is also evaluated to determine if it is expressed across all exposure routes and durations of interest for each CMG member. The temporal aspects (e.g., time to peak effects, time to recovery) of the common mechanism toxicity are characterized to determine the critical window of its expression.

Not all cumulative assessments need to be of the same depth and scope. Thus, early in the cumulative assessment process, it is important to determine the need for, or the capability to perform, a comprehensive risk assessment. This is done by considering the number and types of possible exposure scenarios in conjunction with the associated residue values available. Initial toxicological and exposure information is collected. A screening-level assessment may be conducted that applies more conservative approaches than would a comprehensive and refined cumulative risk assessment. For example, margins of exposure may be based on no-observed adverse-effect-levels (NOAELs) for the common toxic effect rather than modeling dose-response curves of each chemical member to derive more refined relative potencies and points of departures. For dietary food risk, treatment of 100% of crops is assumed for each CMG chemical registered for use on a crop. Tolerance-level residues for the exposure component of the assessment may be assumed, rather than producing a refined estimate of actual residue levels from monitoring. If a screening-level analysis including such overestimates of exposure indicates that there is no risk concern, then no further detailed assessment may be necessary. But if this conservative approach indicates a potential for unacceptable risk, then a refined assessment should be conducted. This may engender the need for additional data.

As the risk assessor proceeds with the cumulative assessment, it is important to determine candidate chemicals and uses, routes, and pathways from the CMG that may cause cumulative effects. Cumulative assessments should not attempt to quantify risk resulting from those common-mechanism chemicals that will have a minimal toxic contribution to the cumulative hazard, or from minor exposure pathways, routes, or uses.

Exposures from minor pathways should be considered qualitatively. Thus, a subset of common-mechanism chemicals to be included in the quantification of cumulative risk needs to be identified from the CMG. This subgroup is called the cumulative assessment group (CAG). The identification of the CAG is done throughout the process as a detailed understanding of each group member's hazard and exposure potential emerges from the analysis. Although a

chemical(s) may be removed from the quantification of risk, the rationale for such decisions will be explained. Thus, all chemicals that were grouped by a common mechanism of toxicity will be accounted for (qualitatively or quantitatively) in the final assessment.

OPP will use dose addition for determining the combined risk of the CAG. This approach is consistent with the Agency's approach to multichemical assessments that involve chemicals that are toxicologically similar and share a common toxic effect. OPP will depart from the dose-addition approach if there are data available to support an alternative method. A dose-response analysis is performed on each CAG member to determine its toxic potency for the common toxic effect. The determination of toxic potency should, to the extent feasible with available data, be conducted on a uniform basis (i.e., same measure of potency, for the same effect, from the same test species/sex using studies of comparable methodology).

Once the toxic potency of each common-mechanism chemical is determined, the relative potencies of the CAG members are established. To determine relative potency, a chemical from the CAG is selected to serve as the index chemical. The index chemical is used as the point of reference for standardizing the common toxicity of the other chemical members of the CAG. Once the index chemical is selected, relative potency factors (RPFs) are calculated (i.e., the ratio of the toxic potency of a given chemical relative to that of the index chemical). RPFs are used to convert exposures of all chemicals in the CAG into exposure equivalents of the index chemical. Given that the RPF method portrays risk as exposure equivalents to one chemical (the index compound), it is preferred that index chemical (1) have high-quality dose-response data, (2) have a toxicological/biological profile for the common toxicity that is representative of the common toxic effect(s), and (3) be well characterized for the common mechanism of toxicity. The last step in the dose-response assessment is to calculate a point of departure(s) for the index chemical so that the risk of the CAG can be extrapolated to anticipated human exposures.

Detailed exposure scenarios for all of the uses remaining for each pesticide in the CAG must be developed. This includes determination of potential human exposures by all relevant pathways, durations, and routes that may allow simultaneous exposures, or any sequential exposures among the CAG members that could contribute to the same joint risk of the common toxic effect (i.e., either by overlapping internal doses or by overlapping toxic effects). The framework for estimating combined exposures is based on exposure to individuals, representing differing attributes of the population (e.g., human activity patterns, place of residence, age) that link pathways/route of exposure through scenario building. Cumulative risk values for a given common toxic effect are calculated separately for each exposure route and duration and then combined. To the extent data permit, the temporal and spatial linkages should be maintained for the many factors defining a possible individual exposure. A decision must be made on the relative importance of scenarios and the need for their inclusion in a quantitative assessment, as well as on the populations of interest and locations for evaluation in the assessment. The potential for co-occurrence of possible exposure scenarios is evaluated. Spatial, temporal, and demographic considerations are major factors in determining whether a concurrent exposure is likely to occur. In other words, all exposure events need to occur over a specific interval of time; events need to agree in time, place, and demographic characteristics; and an individual's dose needs to be matched with relevant toxicological values in terms of route and duration.

Exposure input parameters must be established. The magnitude, frequency, and duration for all pertinent exposure pathway/route combinations are determined, and appropriate sources of use/usage information, residues in all appropriate media, and any modifying factors necessary for inclusion in the assessment are identified. Where necessary, any appropriate surrogate datasets from other chemical-specific data, published literature, or generic datasets are identified. A trial run of a quantitative cumulative risk is conducted by assigning route-specific and duration-specific risk metrics. The outputs of this trial run are evaluated and a sensitivity analysis is conducted. Subpopulations of concern are assessed.

The last step of the assessment process is to characterize the risk. The results and conclusions of the cumulative risk analysis are clearly described, including the relative confidence in toxicity and exposure data sources and model inputs. The risk characterization also includes a description of the variability. Major areas of uncertainty are described both qualitatively and quantitatively. The magnitude and direction of likely bias and the impact on the final assessment are discussed. Risk contributors are identified with regard to pesticide(s), pathway, source, time of year, and impacted subpopulation (with particular attention to children). The basis for group uncertainty and FQPA safety factors is explained.

In the event that a cumulative risk assessment indicates that there may be risks of concern, OPP would need to develop risk mitigation measures and take appropriate regulatory actions. OPP notes that the Cumulative Risk Assessment Guidance document does not address the process used to decide on the need for or the choice of risk mitigation measures. It may be possible to address risk concerns through mitigation measures that do not significantly change the use of a pesticide (e.g. reducing application rates or changing the timing or manner of application). In other cases, however, OPP acknowledges that regulatory measures, that reduce or eliminate pesticide uses, may be necessary and may result in the use of other pesticides or alternative pest control practices, which may have their own risks and benefits. While beyond the scope of this science policy document, OPP also recognizes that it is important to consider potential risks and benefits of such substitutes and alternatives to ensure that decisions do not increase net risk, transfer risk unreasonably, and fail to preserve important benefits wherever possible. Such consideration would be an important part in designing mitigation options for aggregate risk assessments for individual chemicals and for cumulative risk assessments for chemicals sharing a common mechanism of toxicity. The consideration of the risks and benefits of alternatives would contribute to an understanding of whether adoption of a possible risk mitigation measure might actually result in increased risks. When alternative means of reducing risk exist, OPP intends that the risk management decisions appropriately take into account which of the mitigation measures achieves the necessary reduction in risk in the most efficient manner, i.e., the manner that has the highest societal benefits. Accordingly, OPP will produce an analysis of alternatives when developing risk reduction options so that the net societal risk and net societal benefits for the options can be estimated. This analysis will enable risk managers to assure that there are not significant risk transfers and uses with important benefits are maintained, to the extent possible.

OPP is interested in understanding the views of the public on these issues—

both in the context of making regulatory decisions on specific pesticides and more broadly. OPP's ongoing process of public participation in individual pesticide tolerance reassessment decisions affords ample opportunity for interested stakeholders to comment on these issues as they may affect individual chemicals, classes of chemicals, and the transfer of risks and benefits. In addition, OPP intends to seek public input on broader methodological aspects of these issues through its existing federal advisory committee, the Committee to Advise on Reassessment and Transition, and/or through other avenues that give the public an opportunity to comment. OPP intends to make publicly available the comments received, and to use an open and participatory process to discuss the analysis, methods, and scientific considerations the Agency may use when characterizing changes in net risk, and effects of any transfer of risk and benefits associated with mitigation options.

IV. Policies Not Rules

The policy document discussed in this notice is intended to provide guidance to EPA personnel and decision-makers, and to the public. As a guidance document and not a rule, the policy in this guidance is not binding on either EPA or any outside parties. Although this guidance provides a starting point for EPA risk assessments, EPA will depart from its policy where the facts or circumstances warrant. In such cases, EPA will explain why a different course was taken. Similarly, outside parties remain free to assert that a policy is not appropriate for a specific pesticide or that the circumstances surrounding a specific risk assessment demonstrate that a policy should not be applied.

List of Subjects

Environmental protection, Administrative practice and procedure, Agricultural commodities, Pesticides and pests.

Dated: January 8, 2002.

Stephen Johnson,

Assistant Administrator for Prevention, Pesticides and Toxic Substances.

[FR Doc. 02–959 Filed 1–15–02; 8:45 am]

BILLING CODE 6580–50–S

FEDERAL RESERVE SYSTEM

Sunshine Act Meeting

AGENCY HOLDING THE MEETING: Board of Governors of the Federal Reserve System.

TIME AND DATE: 11 a.m., Tuesday, January 22, 2002.

PLACE: Marriner S. Eccles Federal Reserve Board Building, 20th and C Streets, NW., Washington, DC 20551.

STATUS: Closed.

MATTERS TO BE CONSIDERED:

1.Personnel actions (appointments, promotions, assignments, reassignments, and salary actions) involving individual Federal Reserve System employees.

2. Any items carried forward from a previously announced meeting.

CONTACT PERSON FOR MORE INFORMATION: Michelle A. Smith, Senior Advisor to the Board; 202–452–3204.

SUPPLEMENTARY INFORMATION: You may call 202–452–3206 beginning at approximately 5 p.m. two business days before the meeting for a recorded announcement of bank and bank holding company applications scheduled for the meeting; or you may contact the Board's Web site at http://www.federalreserve.gov for an electronic announcement that not only lists applications, but also indicates procedural and other information about the meeting.

Dated: January 14, 2002.

Robert deV. Frierson,

Deputy Secretary of the Board.

[FR Doc. 02–1279 Filed 1–14–02; 2:54 pm]

BILLING CODE 6210–01–P

GENERAL SERVICES ADMINISTRATION

[OMB Control No. 3090–0086]

Submission for OMB Review and Extension GSA Form 1364, Proposal To Lease Space (Not Required by Regulation)

AGENCY: General Services Administration (GSA).

ACTION: Notice of a request for an extension to an existing OMB clearance.

SUMMARY: Under the provisions of the Paperwork Reduction Act of 1995 (44 U.S.C. chapter 35), the General Services Administration (GSA) Regulatory Secretariat requested in August 2001 that the Office of Management and Budget (OMB) reinstate an information collection that pertains to GSA Form 1364, Proposal to Lease Space (not Required by Regulation). OMB reinstated the collection on August 24, 2001. Information collected under this authority is not otherwise required by regulation.

Public comments are particularly invited on: Whether the GSA Form 1364, Proposal to Lease space, is necessary to conduct a proper analysis of leasing proposals prior to awarding leasing contracts, and whether it will have practical utility; whether our estimate of the public burden of this collection of information is accurate, and based on valid assumptions and methodology; ways to enhance the quality, utility, and clarity of the information to be collected; and ways in which we can minimize the burden of the collection of information on those who are to respond, through the use of appropriate technological collection techniques or other forms of information technology. A request for public comments was published at 66 FR 52769, October 17, 2001. No comments were received.

DATES: Submit comments on or before February 15, 2002.

FOR FURTHER INFORMATION CONTACT: Julia Wise, Acquisition Policy Division, GSA (202) 208–1168.

ADDRESSES: Comments regarding this burden estimate or any other aspect of this collection of information, including suggestions for reducing this burden, should be submitted to: Ed springer, GSA Desk Officer, OMB, Room 10236, NEOB, Washington, DC 20503, and a copy to Stephanie Morris General services Administration, Regulatory Secretariat, 1800 F Street, NW., Room 4035, Washington, DC 20405.

SUPPLEMENTARY INFORMATION:

A. Purpose

The General Services Administration (GSA) has various mission responsibilities related to the acquisition and provision of real property management, and disposal of real and personal property. These mission responsibilities generate requirements that are realized through the solicitation and award of leasing contracts. Individual solicitations and resulting contracts may impose unique information collection/reporting requirements on contractors, not required by regulation, but necessary to evaluate particular program accomplishments and measure success in meeting program objectives.

B. Annual Reporting Burden

Respondents: 5016.
Responses Per Respondent: 1.
Total Responses: 5,016.

Total Burden Hours: 25,183.

Obtaining Copies of Proposals

Requester may obtain a copy of the proposal from the General Services Administration, Regulatory Secretariat (MVP), 1800 F Street, NW., Room 4035, Washington, DC 20405, telephone (202) 501–4744. Please cite OMB Control No. 3090–0086, GSA Form 1364, Proposal to Lease Space (Not Required by Regulation), in all correspondence.

Dated: January 10, 2002.

Michael W. Carleton,

Chief Information Officer (I).

[FR Doc. 02–1107 Filed 1–15–02; 8:45 am]

BILLING CODE 6820–34–M

OFFICE OF GOVERNMENT ETHICS

Submission for OMB Review; Comment Request: Updated Qualified Trust Model Certificates and Model Trust Documents

AGENCY: Office of Government Ethics (OGE).

ACTION: Notice.

SUMMARY: The Office of Government Ethics has submitted the proposed updated executive branch qualified trust model certificates and draft documents to the Office of Management and Budget (OMB) for for review and three-year extension of approval under the Paperwork Reduction Act. A total of twelve OGE model certificates and documents are involved.

DATES: Comments by the public and agencies on this information collection as proposed for revision should be received by February 15, 2002.

ADDRESSES: Comments should be sent to Joseph F. Lackey, Jr., Office of Information and Regulatory Affairs, Office of Management and Budget, New Executive Office Building, Room 10235, Washington, DC 20503; Telephone: 202–395–7316.

FOR FURTHER INFORMATION CONTACT: Mary T. Donovan at the U.S. Office of Government Ethics; Telephone: 202–208–8000, ext. 1185; TDD 202–208–8025; FAX 202–208–8038. Copies of the executive branch qualified trust model certificates and documents may be obtained, without charge, by contacting Ms. Donovan.

SUPPLEMENTARY INFORMATION: The Office of Government Ethics is the supervising ethics office for the executive branch of the Federal Presidential nominees to executive branch positions subject to Senate confirmation and any other executive branch officials may seek OGE approval for Ethics Act qualified blind or diversified trusts to be used to avoid conflicts of interest.

The Office of Government Ethics is the sponsoring agency for the model certificates and model trust documents for qualified blind and diversified trusts of executive branch officials set up under section 102(f) of the Ethics Act, 5 U.S.C. app. § 102(f), and OGE's implementing financial disclosure regulations at subpart D of 5 CFR part 2634. The various model certificates and model trust documents are utilized by OGE and settlors, trustees and other fiduciaries in establishing and administering these qualified trusts.

On July 3, 2001, OGE issued its first round **Federal Register** notice to announce its forthcoming request to OMB for paperwork renewal of the updated qualified trust model certificates and model trust documents. See 66 FR 35243–35244, with comments due by September 17, 2001. (OGE did not receive any comments or requests for copies of the updated qualified trust model certificates and model trust documents.) In that notice, and this one, OGE has proposed a minor change to the qualified trust model documents. The Office of Government Ethics has proposed to substitute the words ''mailing address'' for the words ''home address'' where they appear within the model trust documents. The proposed change is a minor improvement that will enhance privacy with respect to trust instruments once executed. No change is needed for the model certificates of independence and compliance as codified at appendices A–C to 5 CFR part 2634.

The Office of Government Ethics has submitted updated versions of all twelve qualified trust certificates and model documents described below (all of which are included under OMB paperwork control number 3209–0007, currently cleared through the end of January 2002) for a three-year extension of approval by OMB under the Paperwork Reduction Act (44 U.S.C. chapter 35).

There are two categories of information collection requirements, each with its own related reporting model certificates or model trust documents which are subject to paperwork review and approval by OMB. The OGE regulatory citations for these two categories, together with identification of the forms used for their implementation, are as follows:

i. Qualified trust certifications—5 CFR 2634.401(d)(2), 2634.403(b)(11), 2634.404(c)(11), 2634.406(a)(3) & (b), 2634.408, 2634.409 and appendixes A & B to part 2634 (the two implementing forms, the Certificate of Independence and Certificate of Compliance, are codified respectively in the cited appendixes; see also the Privacy Act and Paperwork Reduction Act notices thereto in appendix C); and

ii. Qualified trust communications and model provisions and agreements—5 CFR 2634.401(c)(1)(i) & (d)(2), 2634.403(b), 2634.404(c), 2634.408 and 2634.409 (the ten implementing forms are the: (A) Blind Trust Communications (Expedited Procedure for Securing Approval of Proposed Communications); (B) Model Qualified Blind Trust Provisions; (C) Model Qualified Diversified Trust Provisions; (D) Model Qualified Blind Trust Provisions (For Use in the Case of Multiple Fiduciaries); (E) Model Qualified Blind Trust Provisions (For Use in the Case of an Irrevocable Pre-Existing Trust); (F) Model Qualified Diversified Trust Provisions (Hybrid Version); (G) Model Qualified Diversified Trust Provisions (For Use in the Case of Multiple Fiduciaries); (H) Model Qualified Diversified Trust Provisions (For Use in the Case of an Irrevocable Pre-Existing Trust); (I) Model Confidentiality Agreement Provisions (For Use in the Case of a Privately Owned Business); and (J) Model Confidentiality Agreement Provisions (For Use in the Case of Investment Management Activities)).

The various model trust certificates and model trust documents as proposed to be modified are available without charge to the public upon request as indicated in the ''For Further Information Contact'' section above.

The communications formats and the confidentiality agreements (items ii (A), (I) and (J) above) would not be available to the public because they contain sensitive, confidential information. All the other completed model trust certificates and model trust documents (except for any trust provisions that relate to the testamentary disposition of trust assets) are publicly available based upon a proper Ethics Act request (by filling out an OGE Form 201 access form).

The total annual public reporting burden represents the time involved for completing qualified trust certificates and model trust documents which are processed by OGE. The burden is based on the amount of time imposed on private citizens. Virtually all filers/document users are private trust administrators and other private representatives who help to set up and maintain the qualified blind and diversified trusts. The detailed paperwork estimates below for the various trust certificates and model trust documents, which remain the same as

for the last paperwork clearance three years ago, are based primarily on OGE's experience with administration of the qualified trust program.

i. Trust Certificates

A. *Certificate of Independence:* Total filers (executive branch): 10; Private citizen filers (100%): 10; OGE-processed certificates (private citizens): 10; OGE burden hours (20 minutes/certificate): 3.

B. *Certificate of Compliance:* Total filers (executive branch): 35; Private citizen filers (100%): 35; OGE-processed certificates (private citizens): 35; OGE burden hours (20 minutes/certificate): 12; and

ii. Model Qualified Trust Documents

A. *Blind Trust Communications:* Total Users (executive branch): 35; Private citizen users (100%): 35; OGE-processed documents (private citizens): 210 (based on an average of six communications per user, per year); OGE burden hours (20 minutes/communication): 70.

B. *Model Qualified Blind Trust:* Total Users (executive branch): 10; Private citizen users (100%): 10; OGE-processed models (private citizens): 10; OGE burden hours (100 hours/model): 1,000.

C. *Model Qualified Diversified Trust:* Total users (executive branch): 15; Private citizen users (100%): 15; OGE-processed models (private citizens): 15; OGE burden hours (100 hours/model): 1,500.

D.–H. *Each of the five remaining model qualified trust documents:* Total users (executive branch): 2; Private citizen users (100%): 2; OGE-processed models (private citizens): 2, multiplied by 5 (five different models) = 10; OGE burden hours (100 hours/model): 200, multiplied by 5 (five different models) = 1,000.

I.–J. *Each of the two model confidentiality agreements:* Total users (executive branch): 2; Private citizens users (100%): 2; OGE-processed agreements (private citizens): 2, multiplied by 2 (two different models) = 4; OGE burden hours (50 hours/agreement): 100, multiplied by 2 (two different models) = 200.

Based on these estimates, the total number of forms expected annually at OGE remains unchanged at 294 with a cumulative total of 3,785 burden hours.

In this second round notice, public comment is again invited on all aspects of OGE's qualified trust model certificates and model trust documents as proposed for renewal with minor revision, including specifically views on: the accuracy of OGE's public burden estimate; the potential for enhancement of quality, utility, and clarity of the information to be collected; and the minimization of burden (including the possibility of use of information technology). The Office of Government Ethics, in consultation with OMB, will consider all comments received, which will become a matter of public record.

Approved: January 10, 2002.

Amy L. Comstock,

Director, Office of Government Ethics.

[FR Doc. 02–1144 Filed 1–15–02; 8:45 am]

BILLING CODE 6345–01–P

DEPARTMENT OF HEALTH AND HUMAN SERVICES

Centers for Disease Control and Prevention

[30DAY–13–02]

Agency Forms Undergoing Paperwork Reduction Act Review

The Centers for Disease Control and Prevention (CDC) publishes a list of information collection requests under review by the Office of Management and Budget (OMB) in compliance with the Paperwork Reduction Act (44 U.S.C. chapter 35). To request a copy of these requests, call the CDC Reports Clearance Officer at (404) 639–7090. Send written comments to CDC, Desk Officer, Human Resources and Housing Branch, New Executive Office Building, Room 10235, Washington, DC 20503. Written comments should be received within 30 days of this notice.

Proposed Project

Evaluation of Effectiveness of NIOSH Publications—NEW—National Institute for Occupational Safety and Health (NIOSH), Centers for Disease Control and Prevention (CDC). Through the development, organization, and dissemination of information, NIOSH promotes awareness about occupational hazards and their control, and improves the quality of American working life. Although NIOSH uses a variety of media and delivery mechanisms to communicate with its constituents, one of the primary vehicles is through the distribution of NIOSH-numbered publications. The extent to which these publications successfully meet the information needs of their intended audience is not currently known. In a period of diminishing resources and increasing accountability, it is important that NIOSH be able to demonstrate that communications about its research and service programs are both effective and efficient in influencing workplace change. This requires a social marketing evaluation of NIOSH products to measure the degree of customer satisfaction and their adoption of recommended actions.

The present project proposes to do this by conducting a mail survey of a primary segment of NIOSH's customer base, the community of occupational safety and health professionals. In collaboration with the American Association of Occupational Health Nurses (13,000 members), the American Industrial Hygiene Association (12,400 members), the American College of Occupational and Environmental Medicine (6,500 members), and the American Society of Safety Engineers (33,000 members), NIOSH will survey a sample of their memberships to ascertain, among other things: (1) Their perceptions and attitudes toward NIOSH as a general information resource; (2) their perceptions and attitudes about specific types of NIOSH publications (*e.g.*, criteria documents, technical reports, alerts); (3) the frequency and nature of referral to NIOSH in affecting occupational safety and health practices and policies; (4) the extent to which they have implemented NIOSH recommendations; and (5) their recommendations for improving NIOSH products and delivery systems. The results of this survey will provide an empirical assessment of the impact of NIOSH publications on occupational safety and health practice and policy in the United States as well as provide direction for shaping future NIOSH communication efforts. The annual burden for this data collection is 400 hours.

Respondents	No. of responses/ respondents	Average burden per response
1,200	1	20/60

Dated: January 8, 2002.

Nancy E. Cheal,

Acting Associate Director for Policy, Planning and Evaluation, Centers for Disease Control and Prevention.

[FR Doc. 02–1053 Filed 1–15–02; 8:45 am]

BILLING CODE 4163–18–P

DEPARTMENT OF HEALTH AND HUMAN SERVICES

Centers for Medicare & Medicaid Services

Privacy Act of 1974; Report of New System

AGENCY: Department of Health and Human Services (HHS), Centers for Medicare & Medicaid Services (CMS) (formerly the Health Care Financing Administration).

ACTION: Notice of new system of records (SOR).

SUMMARY: In accordance with the requirements of the Privacy Act of 1974, we are proposing to establish a new system of records (SOR), called the ''Evaluations of The Medicaid Reform Demonstrations (EMRD),'' HHS/CMS/OSP No. 09–70–0068. The primary purpose of this SOR is to collect and provide data necessary to evaluate a series of Medicaid Reform Demonstrations that rely on waivers of section 1115 of the Social Security Act. This system will allow measurement of the effects of the demonstration on beneficiaries eligibility, access to care, utilization, health care costs, satisfaction with care, quality of care and health status. The information retrieved from this SOR will be used: (1) To support program administration, reporting, and regulatory, reimbursement, and policy functions performed within the CMS or by a contractor or consultant; (2) to enable another Federal or State Agency to contribute to the accuracy of the CMS's proper payment of Medicaid, State Children's Health Insurance Program and Medicare benefits; (3) to enable CMS to administer a Federal health benefits program or to enable CMS to fulfill a requirement of a Federal statute or regulation that implements a health benefits program funded in whole or in part with Federal funds; (4) to support constituent requests made by a Congressional representative; (5) to support litigation involving the Agency; (6) to support program administration, reporting, research, evaluation, and related issues; (7) and to disclose individual-specific information for the purpose of combating fraud and abuse in health benefits programs administered by CMS. We have provided background information about the proposed system in the **SUPPLEMENTARY INFORMATION** section below. Although the Privacy Act requires only that the ''routine use'' portion of the system be published for comment, CMS invites comments on all portions of this notice. *See* **EFFECTIVE DATES** section for comment period.

EFFECTIVE DATES: CMS filed a new system report with the Chair of the House Committee on Government Reform and Oversight, the Chair of the Senate Committee on Governmental Affairs, and the Administrator, Office of Information and Regulatory Affairs, Office of Management and Budget (OMB) on January 4, 2002. In any event, we will not disclose any information under a routine use until 40 days after publication. We may defer implementation of this system of records or one or more of the routine use statements listed below if we receive comments that persuade us to defer implementation.

ADDRESSES: The public should address comments to: Director, Division of Data Liaison and Distribution (DDLD), CMS, Room N2–04–27, 7500 Security Boulevard, Baltimore, Maryland 21244–1850. Comments received will be available for review at this location, by appointment, during regular business hours, Monday through Friday from 9 a.m.–3 p.m., eastern time zone.

FOR FURTHER INFORMATION CONTACT: Sydney Galloway, Office of Strategic Planning, Centers for Medicare & Medicaid Services, 7500 Security Boulevard, Baltimore, Maryland 21244–1850. The telephone number is 410–786–6645.

SUPPLEMENTARY INFORMATION:

I. Description of the New System of Records

A. Statutory and Regulatory Basis for System of Records

CMS proposes to initiate a new SORs collecting data under the authority of section 1875(a) (42 U.S.C. 1395ll) and section 1115 (42 U.S.C. 1315) of the Social Security Act. The EMRD SOR will provide data necessary to evaluate CMS's Evaluations of the Medicaid Reform Demonstrations. As part of this effort, individually identifiable data will be used to analyze the effects of the demonstration on beneficiary eligibility, access to care, utilization, health care costs, satisfaction with care, quality of care, and health status. The information retrieved from this SOR will be used: (1) To support program administration, reporting, and regulatory, reimbursement, and policy functions performed within the Centers for Medicare & Medicaid Services (CMS) or by a contractor or consultant; (2) to enable another Federal or State agency to contribute to the accuracy of the CMS's proper payment of Medicaid, State Children's Health Insurance Program and Medicare benefits; (3) to enable CMS to administer a Federal health benefits program or to enable CMS to fulfill a requirement of a Federal statute or regulation that implements a health benefits program funded in whole or in part with Federal funds; (4) to support constituent requests made by a Congressional representative; (5) to support litigation involving the Agency; (6) to support program administration, reporting, research, evaluation, and related issues; (7) and to disclose individual-specific information for the purpose of combating fraud and abuse in health benefits programs administered by CMS.

B. Background

As of September 1, 1999, 21 section 1115 waivers for demonstrations in the following States have been approved and implemented: Alabama (Mobile County only), Arizona, Arkansas, California (Los Angeles County only), Delaware, District of Columbia, Florida, Hawaii, Kentucky, Maryland, Massachusetts, Minnesota, New Jersey, New York, Ohio, Oklahoma, Oregon, Rhode Island, Tennessee, Vermont and Wisconsin.

CMS has awarded a number of contracts to independent evaluators to assess the demonstrations thus far. These evaluations include:

Evaluation of the State Health Reform Demonstrations (Contract Number 500–94–0047)—Awarded to prime contractor Mathematica Policy Research, Inc. and subcontractors.

Examines the impact of five State Medicaid reform demonstrations (Hawaii, Maryland, Oklahoma, Rhode Island, and Tennessee).

Evaluation of the Medicaid Health Reform Demonstrations (Contract Number 500–95–0040) Awarded to Urban Institute and its subcontractors.

Examines five health reform demonstrations (California (Los Angeles County only), Kentucky, Minnesota, New York, and Vermont).

Evaluation of the Oregon Medicaid Reform Demonstration (Contract Number 500–94–0056)—Awarded to Health Economics Research, Inc. and subcontractors.

Examines the impacts of the Oregon Medicaid Reform Demonstration.

Evaluation of Delaware's Diamond State Health Plan (500–92–0033 Delivery Order Nos. 1 and 4)—Awarded to Research Triangle Institute and subcontractors.

Examines the impacts of the Delaware demonstration, with particular emphasis on children, including children with special health care needs.

Evaluation of Mass Health Quality Improvement Plan and Insurance Reimbursement Program (Contract Number 500–95–0058/T.O. #9)—Awarded to Health Economics Research, Inc. and subcontractors.

The evaluation will consist of two parts: (1) A case study of the quality improvement process in Medicaid MCOs and PCCs; (2) A case study of the implementation of the Insurance Reimbursement Program for low-income families.

Evaluation of the District of Columbia's Demonstration Project, ''Managed Care System for Disabled and

Special Needs Children'' (Contract Number 500–96–0003)—Awarded to Abt Associates, Inc. and subcontractors.

The goal of this project is to document and analyze the experiences of the District of Columbia's managed care system for children and adolescents under the age of 22 who are eligible for Medicaid and who are considered disabled according to Supplemental Security Income (SSI) Program guidelines.

Focused Evaluation of Ohio Section 1115 State Health Reform Demonstration: Behavioral Health (Contract Number 500–97–0022)—Awarded to Heath Economics Research, Inc. and subcontractors.

This evaluation will consist of the following two components: (1) A focused evaluation of the behavioral health component of OhioCare, Ohio's section 1115 State health reform demonstration; and (2) A case study of the implementation of OhioCare.

Additional contracts will be awarded to evaluate other demonstrations as they are approved.

1. Each evaluation conducts analyses to answer the following broad questions for participants, individuals, employers or other relevant parties; or nonparticipant comparison populations from the pre-demonstration period, during the demonstration, and post-demonstration period.

2. How were the demonstrations implemented, and what processes were put in place to administer them. Are these processes effective?

3. What are the impacts of the demonstrations on eligibility and access to care?

4. What are the demonstrations' impacts on quality, including health status impacts, the process of care delivered, and satisfaction with care received?

5. What are the impacts of the demonstrations on the utilization of services?

6. What are the impacts of the demonstrations on cost, from Federal, State, provider, employer, and beneficiary perspectives?

As part of these efforts, the contractors will use individually identifiable data from state administrative data bases (including, but not, limited to, Medicaid eligibility, claims and encounter data), CMS data bases, data from other Federal and State agencies (including, but not limited to, the Social Security Administration), and other relevant data bases, surveys and vital records to analyze the effects of the demonstration on beneficiary eligibility, access to care, health care costs, satisfaction with care, and health status. CMS and the contractor will collect only that information necessary to perform the system's function.

II. Collection and Maintenance of Data in the System

A. Scope of the Data Collected

The SOR is expected to include data on the number and type of services used by demonstration participants and comparison group members and their experiences in accessing health care before, during, and after the demonstration period. Sources of information contained in this records system are expected to include: State Medicaid Management Information Systems, managed care organizations (i.e., encounter data), fee-for-service providers, surveys of demonstration participants or providers and comparison group members, medical records, Social Security Administration data bases, vital statistics, and other relevant data systems.

B. Agency Policies, Procedures, and Restrictions on the Routine Use

The Privacy Act permits us to disclose information without an individual's consent if the information is to be used for a purpose that is compatible with the purpose(s) for which the information was collected. Any such disclosure of data is known as a ''routine use.'' The government will only release EMRD information that can be associated with an individual patient as provided for under ''Section III. Entities Who May Receive Disclosures Under Routine Use.'' Both identifiable and non-identifiable data may be disclosed under a routine use. Identifiable data includes individual records with EMRD information and identifiers. Non-identifiable data includes individual records with EMRD information and masked identifiers or EMRD information with identifiers stripped out of the file.

We will only disclose the minimum personal data necessary to achieve the purpose of the EMRD. CMS has the following policies and procedures concerning disclosures of information that will be maintained in the system. In general, disclosure of information from the SOR will be approved only for the minimum information necessary to accomplish the purpose of the disclosure after CMS:

1. Determines that the use or disclosure is consistent with the reason that the data is being collected; *e.g.,* to evaluate the effects of the demonstration on beneficiaries eligibility, access to care, utilization, health care costs, satisfaction with care; quality of care, and health status.

1. Determines that:

a. The purpose for which the disclosure is to be made can only be accomplished if the record is provided in individually identifiable form;

b. The purpose for which the disclosure is to be made is of sufficient importance to warrant the effect and/or risk on the privacy of the individual that additional exposure of the record might bring; and

c. There is a strong probability that the proposed use of the data would in fact accomplish the stated purpose(s).

3. Requires the information recipient to:

a. Establish administrative, technical, and physical safeguards to prevent

b. Unauthorized use of disclosure of the record;

c. Remove or destroy at the earliest time all patient-identifiable information; and

d. Agree to not use or disclose the information for any purpose other than the stated purpose under which the information was disclosed.

4. Determines that the data are valid and reliable.

III. Proposed Routine Use Disclosures of Data in the System

A. Entities Who May Receive Disclosures Under Routine Use

These routine uses specify circumstances, in addition to those provided by statute in the Privacy Act of 1974, under which CMS may release information from the EMRD without the consent of the individual to whom such information pertains. Each proposed disclosure of information under these routine uses will be evaluated to ensure that the disclosure is legally permissible, including but not limited to ensuring that the purpose of the disclosure is compatible with the purpose for which the information was collected.

We are proposing to establish the following routine use disclosures of information maintained in the system:

1. To agency contractors or consultants who have been contracted by the agency to assist in the performance of a service related to this system of records and who need to have access to the records in order to perform the activity.

We contemplate disclosing information under this routine use only in situations in which CMS may enter into a contractual or similar agreement with a third party to assist in accomplishing agency business functions relating to purposes for this system of records.

CMS occasionally contracts out certain of its functions when doing so

would contribute to effective and efficient operations. CMS must be able to give a contractor whatever information is necessary for the contractor to fulfill its duties. In these situations, safeguards are provided in the contract prohibiting the contractor from using or disclosing the information for any purpose other than that described in the contract and requires the contractor to return or destroy all information at the completion of the contract.

2. To the Agency of a state or local government, or established by state law, for purposes of ensuring that no payments are made with respect to any item or service furnished by an individual or entity during the period when such individual or entity is excluded from participation in Medicaid, SCHIP, Medicare or other Federal and State health care programs. Data will be released to the State only on those individuals who are either individuals or entities excluded from participation in Medicaid, SCHIP, Medicare, or other Federal and State health care programs, or employers of excluded individuals or entities, or are legal residents of the State, irrespective of the location of a provider or supplier furnishing items or services.

Program evaluation relies, in large part, on program integrity and the integrity of collected data, the routine use proposed in this paragraph is a necessary requirement for this database, and is therefore, compatible with the purpose for which the information is being collected.

3. To another Federal or state agency:

a. To contribute to the accuracy of CMS's proper payment of Medicaid, SCHIP, or Medicare benefits,

b. To enable such agency to administer a Federal health benefits program, or as necessary to enable such agency to fulfill a requirement of a Federal statute or regulation that implements a health benefits program funded in whole or in part with Federal funds, or

c. To fulfill reporting requirements, research, evaluation, or other policy or epidemiological considerations.

CMS, and other Federal or state and local agencies, all contribute data to the databases included in this SOR, and (both separately and jointly) have an interest in performing program evaluation, conducting research and maintaining program integrity. Therefore, the routine uses described herein are compatible with the purpose for which the data are being collected.

4. To an individual or other private or public entity for research, evaluation or epidemiological projects related to the prevention of disease or disability, the restoration or maintenance of health, or for projects designed to increase the efficiency and economy of care provision.

The EMRD data will provide an opportunity for comprehensive research, evaluation and epidemiological projects regarding EMRD patients. CMS anticipates that many researchers will have legitimate requests to use these data in projects that could ultimately improve the care provided to Medicaid, SCHIP and Medicare beneficiaries and the policy that governs the care.

5. To a Member of Congress or to a congressional staff member in response to an inquiry of the Congressional Office made at the written request of the constituent about whom the record is maintained.

Beneficiaries sometimes request the help of a Member of Congress in resolving some issue relating to a matter before CMS. The Member of Congress then writes CMS, and CMS must be able to give sufficient information to be responsive to the inquiry.

6. To the Department of Justice (DOJ), court or adjudicatory body when:

a. The agency or any component thereof, or

b. Any employee of the agency in his or her official capacity; or

c. Any employee of the agency in his or her individual capacity where the DOJ has agreed to represent the employee, or

d. The United States Government;

is a party to litigation or has an interest in such litigation, and by careful review, CMS determines that the records are both relevant and necessary to the litigation.

Whenever CMS is involved in litigation, or occasionally when another party is involved in litigation and CMS's policies or operations could be affected by the outcome of the litigation, CMS would be able to disclose information to the DOJ, court or adjudicatory body involved. A determination would be made in each instance that, under the circumstances involved, the purposes served by the use of the information in the particular litigation is compatible with a purpose for which CMS collects the information.

7. To CMS or State contractors, to administer some aspect of the health benefits programs, or to a CMS grantee or program which is or could be affected by fraud and abuse, for the purpose of preventing, deterring, discovering, detecting, investigating, examining, prosecuting, suing with respect to, defending against, correcting, remedying, or otherwise combating such fraud and abuse in such programs.

CMS contemplates disclosing information under this routine use only in situations in which CMS may enter into a contractual or similar agreement with a third party to assist in accomplishing CMS functions relating to purposes for this SORs.

CMS occasionally contracts out certain of its functions when this would contribute to effective and efficient operations. CMS must be able to give a contractor whatever information is necessary for the contractor to fulfill its duties. In these situations, safeguards (like ensuring that the purpose for which the disclosure is to be made is of sufficient importance to warrant the effect and/or risk on the privacy of the individual that additional exposure of the record might bring and those stated in II.B above), are provided in the contract prohibiting the contractor from using or disclosing the information for any purpose other than that described in the contract and to return or destroy all information.

Program evaluation relies, in large part, on program integrity and the integrity of collected data, the routine use proposed in this paragraph is a necessary requirement for this database, and is therefore, compatible with the purpose for which the information is being collected.

8. To another Federal agency or to an instrumentality of any governmental jurisdiction within or under the control of the United States, including any State or Local government agency, for the purpose of preventing, deterring, discovering, detecting, investigating, examining, prosecuting, suing with respect to, defending against, correcting, remedying, or otherwise combating such fraud and abuse in health benefits program funded in whole or in part by Federal funds.

Other State or local agencies in their administration of a Federal health program may require EMRD information for the purpose of preventing, deterring, discovering, detecting, investigating, examining, prosecuting, suing with respect to, defending against, correcting, remedying, or otherwise combating such fraud and abuse in such programs. Releases of information would be allowed if the proposed use(s) for the information proved compatible with the purpose for which CMS collects the information.

Program evaluation relies, in large part, on program integrity and the integrity of collected data, the routine use proposed in this paragraph is a necessary requirement for this database, and is therefore, compatible with the

purpose for which the information is being collected.

B. Additional Provisions Affecting Routine Use Disclosures

In addition, our policy will be to prohibit release even of non-identifiable data, except pursuant to one of the routine uses, if there is a possibility that an individual can be identified through implicit deduction based on small cell sizes (instances where the patient population is so small that individuals who are familiar with the enrollees could, because of the small size, use this information to deduce the identity of the beneficiary).

This System of Records contains Protected Health Information as defined by the Department of Health and Human Services' regulation ''Standards for Privacy of Individually Identifiable Health Information'' (45 CFR parts 160 and 164, 65 FR 82462 as amended by 66 FR 12434). Disclosures of Protected Health Information authorized by these routine uses may only be made if, and as, permitted or required by the ''Standards for Privacy of Individually Identifiable Health Information.''

IV. Safeguards

The HHS EMRD system will conform to applicable law and policy governing the privacy and security of Federal automated information systems. These include but are not limited to: the Privacy Act of 1984, Computer Security Act of 1987, the Paperwork Reduction Act of 1995, the Clinger-Cohen Act of 1996, and OMB Circular A–130, Appendix III, ''Security of Federal Automated Information Resources.'' CMS has prepared a comprehensive system security plan as required by OMB Circular A–130, Appendix III. This plan conforms fully to guidance issued by the National Institute for Standards and Technology (NIST) in NIST Special Publication 800–18, ''Guide for Developing Security Plans for Information Technology Systems.'' Paragraphs A–C of this section highlight some of the specific methods that CMS is using to ensure the security of this system and the information within it.

A. Authorized Users

Personnel having access to the system have been trained in Privacy Act requirements. Employees who maintain records in the system are instructed not to release any data until the intended recipient agrees to implement appropriate administrative, technical, procedural, and physical safeguards sufficient to protect the confidentiality of the data and to prevent unauthorized access to the data. Records are used in a designated work area and system location is attended at all times during working hours.

To ensure security of the data, the proper level of class user is assigned for each individual user level. This prevents unauthorized users from accessing and modifying critical data. The system database configuration includes five classes of database users:

- Database Administrator class owns the database objects (e.g., tables, triggers, indexes, stored procedures, packages) and has database administration privileges to these objects.
- Quality Control Administrator class has read and write access to key fields in the database;
- Quality Index Report Generator class has read-only access to all fields and tables;
- Policy Research class has query access to tables, but are not allowed to access confidential patient identification information; and
- Submitter class has read and write access to database objects, but no database administration privileges.

A. Physical Safeguards

All server sites will implement the following minimum requirements to assist in reducing the exposure of computer equipment and thus achieve an optimum level of protection and security for the CMS system:

Access to all servers is to be controlled, with access limited to only those support personnel with a demonstrated need for access. Servers are to be kept in a locked room accessible only by specified management and system support personnel. Each server is to require a specific log-on process. All entrance doors are identified and marked. A log is kept of all personnel who were issued a security card, key and/or combination, which grants access to the room housing the server, and all visitors are escorted while in this room. All servers are housed in an area where appropriate environmental security controls are implemented, which include measures implemented to mitigate damage to Automated Information Systems (AIS) resources caused by fire, electricity, water and inadequate climate controls.

Protection applied to the workstations, servers and databases include:

- User Log-on—Authentication is to be performed by the Primary Domain Controller/Backup Domain Controller of the log-on domain.
- Workstation Names—Workstation naming conventions may be defined and implemented at the agency level.
- Hours of Operation—May be restricted by Windows NT. When activated all applicable processes will automatically shut down at a specific time and not be permitted to resume until the predetermined time. The appropriate hours of operation are to be determined and implemented at the agency level.
- Inactivity Lockout—Access to the NT workstation is to be automatically locked after a specified period of inactivity.
- Warnings—Legal notices and security warnings are to be displayed on all servers and workstations.
- Remote Access Security—Windows NT Remote Access Service (RAS) security handles resource access control. Access to NT resources is to be controlled for remote users in the same manner as local users, by utilizing Windows NT file and sharing permissions. Dial-in access can be granted or restricted on a user-by-user basis through the Windows NT RAS administration tool.

A. Procedural Safeguards

All automated systems must comply with Federal laws, guidance, and policies for information systems security. These include, but are not limited to: the Privacy Act of 1974; the Computer Security Act of 1987; OMB Circular A–130, revised; Information Resource Management (IRM) Circular #10; HHS Automated Information Systems Security Program; the CMS Information Systems Security Policy, Standards, and Guidelines Handbook; and other CMS systems security policies. Each automated information system should ensure a level of security commensurate with the level of sensitivity of the data, risk, and magnitude of the harm that may result from the loss, misuse, disclosure, or modification of the information contained in the system.

II. Effects of the New System On Individual Rights

CMS proposes to establish this system in accordance with the principles and requirements of the Privacy Act and will collect, use, and disseminate information only as prescribed therein. Data in this system will be subject to the authorized releases in accordance with the routine uses identified in this system of records.

CMS will monitor the collection and reporting of EMRD data. EMRD information on patients is submitted to CMS through standard systems. Accuracy of the data is important since incorrect information could result in the wrong payment for services and a less

effective process for assuring quality of services. CMS will utilize a variety of onsite and offsite edits and audits to increase the accuracy of EMRD data.

CMS will take precautionary measures (see item IV. above) to minimize the risks of unauthorized access to the records and the potential harm to individual privacy or other personal or property rights of patients whose data is maintained in the system. CMS will collect only that information necessary to perform the system's functions. In addition, CMS will make disclosure from the proposed system only with consent of the subject individual, or his/her legal representative, or in accordance with an applicable exception provision of the Privacy Act.

CMS, therefore, does not anticipate an unfavorable effect on individual privacy as a result of maintaining this system of records.

Dated: January 4, 2002.

Thomas A. Scully,

Administrator, Centers for Medicare & Medicaid Services.

09–70–0068

SYSTEM NAME:

''Evaluations of the Medicaid Reform Demonstrations,'' (EMRD).

SECURITY CLASSIFICATION:

Level 3, Privacy Act Sensitive.

SYSTEM LOCATION:

CMS Data Center, 7500 Security Boulevard, North Building, First Floor, Baltimore, Maryland 21244–1850 and CMS contractors and agents at various locations.

CATEGORIES OF INDIVIDUALS COVERED BY THE SYSTEM:

Individuals eligible for Medicaid under the demonstrations (eligibility requirements vary by State) and individuals selected as comparison group members for the evaluations.

CATEGORIES OF RECORDS IN THE SYSTEM:

The system will contain information concerning individual identifiers, demographics, employment, health care coverage, diagnostic and health status information, utilization and cost of health care services, and responses to survey or, other types of data collection methods.

AUTHORITY FOR MAINTENANCE OF THE SYSTEM:

Section 1875(a) (42 U.S.C. 1395ll) and section 1115 (42 U.S.C. 1315) of the Social Security Act.

PURPOSE(S) OF THE SYSTEM:

The primary purpose of this system of records (SOR) is to collect and provide data necessary to evaluate a series of Medicaid Reform Demonstrations that rely on waivers of section 1115 of the Social Security Act. This system will allow measurement of the effects of the demonstration on beneficiaries eligibility, access to care, utilization, health care costs, satisfaction with care, quality of care and health status. The information retrieved from this SOR will be used: (1) To support program administration, reporting, and regulatory, reimbursement, and policy functions performed within the Health Care Financing Administration (CMS) or by a contractor or consultant; (2) to enable another Federal or State agency to contribute to the accuracy of the CMS's proper payment of Medicaid, State Children's Health Insurance Program and Medicare benefits; (3) to enable CMS to administer a Federal health benefits program or to enable CMS to fulfill a requirement of a Federal statute or regulation that implements a health benefits program funded in whole or in part with Federal funds; (4) to support constituent requests made by a Congressional representative; (5) to support litigation involving the agency; (6) to support program administration, reporting, research, evaluation, and related issues; (7) and to disclose individual-specific information for the purpose of combating fraud and abuse in health benefits programs administered by CMS.

ROUTINE USES OF RECORDS MAINTAINED IN THE SYSTEM, INCLUDING CATEGORIES OR USERS AND THE PURPOSES OF SUCH USES:

These routine uses specify circumstances, in addition to those provided by statute in the Privacy Act of 1974, under which CMS may release information from the EMRD without the consent of the individual to whom such information pertains. Each proposed disclosure of information under these routine uses will be evaluated to ensure that the disclosure is legally permissible, including but not limited to ensuring that the purpose of the disclosure is compatible with the purpose for which the information was collected. In addition, our policy will be to prohibit release even of non-identifiable data, except pursuant to one of the routine uses, if there is a possibility that an individual can be identified through implicit deduction based on small cell sizes (instances where the patient population is so small that individuals who are familiar with the enrollees could, because of the small size, use this information to deduce the identity of the beneficiary). Be advised, this System of Records contains Protected Health Information as defined by the Department of Health and Human Services' regulation ''Standards for Privacy of Individually Identifiable Health Information'' (45 CFR parts 160 and 164, 65 FR 8462 as amended by 66 FR 12434). Disclosures of Protected Health Information authorized by these routine uses may only be made if, and as, permitted or required by the ''Standards for Privacy of Individually Identifiable Health Information.''

1. To agency contractors or consultants who have been contracted by the agency to assist in the performance of a service related to this system of records and who need to have access to the records in order to perform the activity.

2. To the Agency of a state or local government, or established by state law, for purposes of ensuring that no payments are made with respect to any item or service furnished by an individual or entity during the period when such individual or entity is excluded from participation in Medicaid, SCHIP, Medicare or other Federal and state health care programs. Data will be released to the State only on those individuals who are either individuals or entities excluded from participation in Medicaid, SCHIP, Medicare, or other Federal and state health care programs, or employers of excluded individuals or entities, or are legal residents of the State, irrespective of the location of a provider or supplier furnishing items or services.

3. To another Federal or state agency:

a. To contribute to the accuracy of CMS's proper payment of Medicaid, SCHIP, or Medicare benefits,

b. To enable such agency to administer a Federal health benefits program, or as necessary to enable such agency to fulfill a requirement of a Federal statute or regulation that implements a health benefits program funded in whole or in part with Federal funds, or

c. To fulfill reporting requirements, research, evaluation, or other policy or epidemiological considerations.

4. To an individual or other private or public entity for research, evaluation or epidemiological projects related to the prevention of disease or disability, the restoration or maintenance of health, or for projects designed to increase the efficiency and economy of care provision.

5. To a member of Congress or to a congressional staff member in response to an inquiry of the Congressional Office made at the written request of the constituent about whom the record is maintained.

6. To the Department of Justice (DOJ), court or adjudicatory body when:

a. The agency or any component thereof; or

b. Any employee of the agency in his or her official capacity; or

c. Any employee of the agency in his or her individual capacity where the DOJ has agreed to represent the employee; or

d. The United States Government; is a party to litigation or has an interest in such litigation, and by careful review, CMS determines that the records are both relevant and necessary to the litigation and the use of such records by the DOJ, court or adjudicatory body is compatible with the purpose for which the agency collected the records.

7. To CMS or state contractors, to administer some aspect of the health benefits programs, or to a CMS grantee or program which is or could be affected by fraud and abuse, for the purpose of preventing, deterring, discovering, detecting, investigating, examining, prosecuting, suing with respect to, defending against, correcting, remedying, or otherwise combating such fraud and abuse in such programs.

8. To another Federal agency or to an instrumentality of any governmental jurisdiction within or under the control of the United States, including any State or Local government agency, for the purpose of preventing, deterring, discovering, detecting, investigating, examining, prosecuting, suing with respect to, defending against, correcting, remedying, or otherwise combating such fraud and abuse in health benefits program funded in whole or in part by Federal funds.

POLICIES AND PRACTICES FOR STORING, RETRIEVING, ACCESSING, RETAINING, AND DISPOSING OF RECORDS IN THE SYSTEM:

STORAGE:

All records are stored on paper or electronic media.

RETRIEVABILITY:

Beneficiary's name, Medicaid identification number, Health Insurance Claim Number, Social Security Number or other identifying variables retrieve the records.

SAFEGUARDS:

CMS has safeguards for authorized users and monitors such users to ensure against excessive or unauthorized use. Personnel having access to the system have been trained in the Privacy Act and systems security requirements. Employees who maintain records in the system are instructed not to release any data until the intended recipient agrees to implement appropriate administrative, technical, procedural, and physical safeguards sufficient to protect the confidentiality of the data and to prevent unauthorized access to the data.

In addition, CMS has physical safeguards in place to reduce the exposure of computer equipment and thus achieve an optimum level of protection and security for the CMS system. For computerized records, safeguards have been established in accordance with HHS standards and National Institute of Standards and Technology guidelines; e.g., security codes will be used, limiting access to authorized personnel. System securities are established in accordance with HHS, Information Resource Management (IRM) Circular #10, Automated Information Systems Security Program; CMS Information Systems Security, Standards Guidelines Handbook and OMB Circular No. A–130 (revised) Appendix III.

RETENTION AND DISPOSAL:

CMS and the repository of the National Archive and Records Administration (NARA) will retain identifiable EMRD data permanently, or as an indefinite retention.

SYSTEM MANAGER AND ADDRESS:

CMS, Director, Office of Strategic Planning, Health Care Financing Administration, 7500 Security Boulevard, Baltimore, Maryland 21244–1850.

NOTIFICATION PROCEDURE:

For purpose of access, the subject individual should write to the system manager who will require the system name, health insurance claim number, and for verification purposes, the subject individual's name (woman's maiden name, if applicable), address, age, and sex, and social security number (SSN) (furnishing the SSN is voluntary, but it may make searching for a record easier and prevent delay).

RECORD ACCESS PROCEDURE:

For purpose of access, use the same procedures outlined in Notification Procedures above. Requestors should also reasonably specify the record contents being sought. (These procedures are in accordance with Department regulation 45 CFR part 5b.5(a)(2).)

CONTESTING RECORD PROCEDURES:

The subject individual should contact the system manager named above, and reasonably identify the record and specify the information to be contested. State the corrective action sought and the reasons for the correction with supporting justification. (These procedures are in accordance with Department regulation 45 CFR part 5b.7.)

RECORD SOURCE CATEGORIES:

Sources of information contained in this records system are expected to include: State Medicaid Management Information Systems, managed care organizations (i.e., encounter data), fee-for-service providers, surveys of demonstration participants or providers and comparison group members, medical records, Social Security Administration data bases, vital statistics and other relevant data systems.

SYSTEMS EXEMPTED FROM CERTAIN PROVISIONS OF THE ACT:

None.

[FR Doc. 02–1063 Filed 1–15–02; 8:45 am]

BILLING CODE 4120–03–P

DEPARTMENT OF HEALTH AND HUMAN SERVICES

Food and Drug Administration

Establishment of Prescription Drug User Fee Rates for Fiscal Year 2002

AGENCY: Food and Drug Administration, HHS.

ACTION: Notice.

SUMMARY: The Food and Drug Administration (FDA) is announcing the rates for prescription drug user fees for fiscal year (FY) 2002. The Prescription Drug User Fee Act of 1992 (PDUFA), as amended by the Food and Drug Administration Modernization Act of 1997 (FDAMA), authorizes FDA to collect user fees for certain applications for approval of drug and biological products, on establishments where the products are made, and on such products. Fees for applications for FY 2002 were set by PDUFA, as amended, subject to adjustment for inflation. Total application fee revenues fluctuate with the number of fee-paying applications FDA receives. Fees for establishments and products are calculated so that total revenues from each category will approximate FDA's estimate of the revenues to be derived from applications.

FOR FURTHER INFORMATION CONTACT: Frank Claunts, Office of Management and Systems (HFA–300), Food and Drug Administration, 5600 Fishers Lane, Rockville, MD 20857, 301–827–4427.

SUPPLEMENTARY INFORMATION:

I. Background

PDUFA (Public Law 102–571), as amended by FDAMA (Public Law 105–

115), referred to as PDUFA II in this document, establishes three different kinds of user fees. Fees are assessed on: (1) Certain types of applications and supplements for approval of drug and biological products, (2) certain establishments where such products are made, and (3) certain products (21 U.S.C. 379h(a)). When certain conditions are met, FDA may waive or reduce fees (21 U.S.C. 379h(d)).

For FY 1998 through 2002, under PDUFA II, the application fee rates are set in the statute, but are to be adjusted annually for cumulative inflation since FY 1997. Total application fee revenues are structured to increase or decrease each year as the number of fee-paying applications submitted to FDA increases or decreases.

Each year from FY 1998 through 2002, FDA is required to set establishment fees and product fees so that the estimated total fee revenue from each of these two categories will equal the total revenue FDA expects to collect from application fees that year. This procedure continues the arrangement under which one-third of the total user fee revenue is projected to come from each of the three types of fees: Application fees, establishment fees, and product fees.

This notice establishes fee rates for FY 2002 for application, establishment, and product fees. These fees are retroactive to October 1, 2001, and will remain in effect through September 30, 2002. For fees already paid on applications and supplements submitted on or after October 1, 2001, FDA will bill applicants for the difference between fees paid and fees due under the new fee schedule. For applications and supplements submitted after January 16, 2002, the new fee schedule must be used. Invoices for establishment and product fees for FY 2002 will be issued in January 2002, using the new fee schedule.

II. Inflation and Workload Adjustment Process

PDUFA II provides that fee rates for each FY shall be adjusted by notice in the **Federal Register**. The adjustment must reflect the greater of : (1) The total percentage change that occurred during the preceding FY in the Consumer Price Index (CPI) (all items; U.S. city average), or (2) the total percentage pay change for that FY for Federal employees stationed in the Washington, DC metropolitan area. PDUFA II provides for this annual adjustment to be cumulative and compounded annually after 1997 (see 21 U.S.C. 379h(c)(1)).

PDUFA II also structures the total application fee revenue to increase or decrease each year as the number of fee-paying applications submitted to FDA increases or decreases. This provision allows revenues to rise or fall as this portion of FDA's workload rises or falls. To implement this provision, each year FDA will estimate the number of fee-paying applications it anticipates receiving. The number of applications estimated will then be multiplied by the inflation-adjusted statutory application fee. This calculation will produce the FDA estimate of total application fee revenues to be received.

PDUFA II also provides that FDA shall adjust the rates for establishment and product fees so that the total revenues from each of these categories is projected to equal the revenues FDA expects to collect from application fees that year. PDUFA II provides that the new fee rates based on these calculations be adjusted within 60 days after the end of each FY (21 U.S.C. 379h(c)(2)).

III. Inflation Adjustment and Estimate of Total Application Fee Revenue

PDUFA II provides that the application fee rates set out in the statute be adjusted each year for cumulative inflation since 1997. It also provides for total application fee revenues to increase or decrease based on increases or decreases in the number of fee-paying applications submitted.

A. Inflation Adjustment to Application Fees

Application fees are assessed at different rates for qualifying applications depending on whether the applications require clinical data for safety or effectiveness (other than bioavailability or bioequivalence studies) (21 U.S.C. 379h(a)(1)(A) and 379h(b)). Applications that require clinical data are subject to the full application fee. Applications that do not require clinical data and supplements that require clinical data are assessed one-half the fee of applications that require clinical data. If FDA refuses to file an application or supplement, 75 percent of the application fee is refunded to the applicant (21 U.S.C. 379h(a)(1)(D)).

The application fees described above are set out in PDUFA II for FY 2002 ($258,451 for applications requiring clinical data, and $129,226 for applications not requiring clinical data or supplements requiring clinical data) (21 U.S.C. 379h(b)(1)), but must be adjusted for cumulative inflation since 1997. That adjustment each year is to be the greater of: (1) The total percentage change that occurred during the preceding FY in the CPI, or (2) the total percentage pay change for that FY for Federal employees stationed in the Washington, DC metropolitan area, as adjusted for any locality-based payment. PDUFA II provides for this annual adjustment to be cumulative and compounded annually after 1997 (see 21 U.S.C. 379h(c)).

The adjustment for FY 1998 was 2.45 percent (62 FR 64849, December 9, 1997). This was the greater of the CPI increase for FY 1997 (2.15 percent) or the increase in applicable Federal salaries (2.45 percent).

The adjustment for FY 1999 was 3.68 percent. (63 FR 70777 at 70778, December 22, 1998). This was the greater of the CPI increase for FY 1998 (1.49 percent) or the increase in applicable Federal salaries (3.68 percent).

The adjustment for FY 2000 was 4.94 percent (64 FR 72669 at 72670, December 28, 1999). This was the greater of the CPI increase for FY 1999 (2.62 percent) or the increase in applicable Federal salaries (4.94 percent).

The adjustment for FY 2001 was 3.81 percent (65 FR 79107 at 79108, December 18, 2000). This was the greater of the CPI increase for FY 2000 (2.62 percent) or the increase in applicable Federal salaries (3.81 percent).

The adjustment for FY 2002 is 4.77 percent. This is the greater of the CPI increase for FY 2001 (2.65 percent) or the increase in applicable Federal salaries (4.77 percent).

Compounding these amounts (1.0245 times 1.0368 times 1.0494 times 1.0381 times 1.0477) yields a total compounded inflation increase of 21.23 percent for FY 2002. The adjusted application fee rates are computed by adding one to the decimal equivalent of this percent (0.2123) and multiplying this amount (1.2123) by the FY 2002 statutory application fee rates stated above ($258,451 for applications requiring clinical data, and $129,226 for applications not requiring clinical data or supplements requiring clinical data). For FY 2002 the adjusted application fee rates are $313,320 for applications requiring clinical data, and $156,660 for applications not requiring clinical data or supplements requiring clinical data. These amounts must be submitted with all applications during FY 2002.

B. Estimate of Total Application Fee Revenue

Total application fee revenues for FY 2002 will be estimated by multiplying the number of fee-paying applications FDA expects to receive in FY 2002 (from October 1, 2001, through September 30,

2002) by the fee rates calculated in the preceding paragraph. Before fees can be set for establishment and product fee categories, each of which are projected to be equal to total revenues FDA collects from application fees, FDA must first estimate its total FY 2002 application fee revenues. To do this FDA first determines its FY 2001 fee-paying full application equivalents, and uses that number in a linear regression analysis to predict the number of fee-paying full application equivalents expected in FY 2002. This is the same technique applied in each of the previous 3 fiscal years.

In FY 2001, FDA received and filed 95 human drug applications that require clinical data for approval, 16 that did not require clinical data for approval, and 126 supplements to human drug applications that required clinical data for approval. Because applications that do not require clinical data and supplements that require clinical data are assessed only one-half the full fee, the equivalent number of these applications subject to the full fee is determined by summing these categories and dividing by 2. This amount is then added to the number of applications that require clinical data to arrive at the equivalent number of applications that may be subject to full application fees.

In addition, as of September 30, 2000, FDA refused to file, or firms withdrew before filing, 2 applications that required clinical data, and 5 applications that either did not require clinical data or that were supplements requiring clinical data. The full applications refused for filing or withdrawn before filing pay one-fourth the full application fee and are counted as one-fourth of an application; the applications that do not require clinical data and the supplements refused for filing or withdrawn before filing pay one-eighth of the full application fee and are each counted as one-eighth of an application.

Using this methodology, the number of full application equivalent (FAE) submissions that were received for review in FY 2001 was 167.125, before any exemptions, waivers or reductions. Under PDUFA II, FDA waives application fees for certain small businesses submitting their first application and for certain orphan products. Certain application supplements for pediatric indications are also exempt from fees. In addition, PDUFA II provides a number of other grounds for waivers (public health necessity, preventing significant barriers to innovation, and fees exceed the cost). In FY 2001 waivers or exemptions were applied to 59 FAE submissions (14.5 for orphan products, 12 for small businesses, 19 for pediatric supplements, and 13.5 miscellaneous exemptions/waivers). Therefore, for FY 2001, FDA estimates that it received 108.125 (167.125 minus 59) FAE submissions that will pay fees, after allowing for exemptions, waivers and reductions.

Next a linear regression line based on the adjusted number of fee-paying FAE submissions since 1993, and including our FY 2001 total of FAEs, must be drawn to project the number of FAEs in FY 2002.

In FY 2002, however, additional applications will have to pay fees. All pediatric supplements will be required to pay fees effective January 4, 2002 (for three-fourths of FY 2002). This is the result of section 5 of the Best Pharmaceuticals for Children Act. It repealed the fee exemption for pediatric supplements effective January 4, 2002. Thus, the regression line projecting FY 2002 fee-paying receipts must be drawn to reflect this change. In FY 1998, 8 full fees were exempted for pediatric supplements; the numbers for FY 1999, FY 2000, and FY 2001 respectively were 5.25, 12.5, and 19. Since fees on these supplements will only be paid for three-fourths of FY 2002 (January 1 through September 30, 2002), three-fourths of the number of pediatric supplements waived each year from FY 1998 through FY 2001 (the only years when fees were waived) will be added to the total of fee-paying FAEs received each year.

A linear regression line based on this adjusted number of fee-paying FAE submissions since 1993, and including our adjusted FY 2001 total of 122.375 FAEs (108.125 fee-paying FAEs and three-fourths of the 19 pediatric supplements that were exempted in FY 2001), projects the receipt of 158.3 fee-paying FAEs in FY 2002, as reflected in table 1 of this document and the graph below.

TABLE 1.

Fiscal Year	1993	1994	1995	1996	1997	1998	1999	2000	2001	2002
Fee-paying FAEs	101.0	108.9	112.5	136.3	161.5	124.5	154.6	162.9	122.4	
Regression Line	110.3	115.6	121.0	126.3	131.6	137.0	142.3	147.6	152.9	158.3

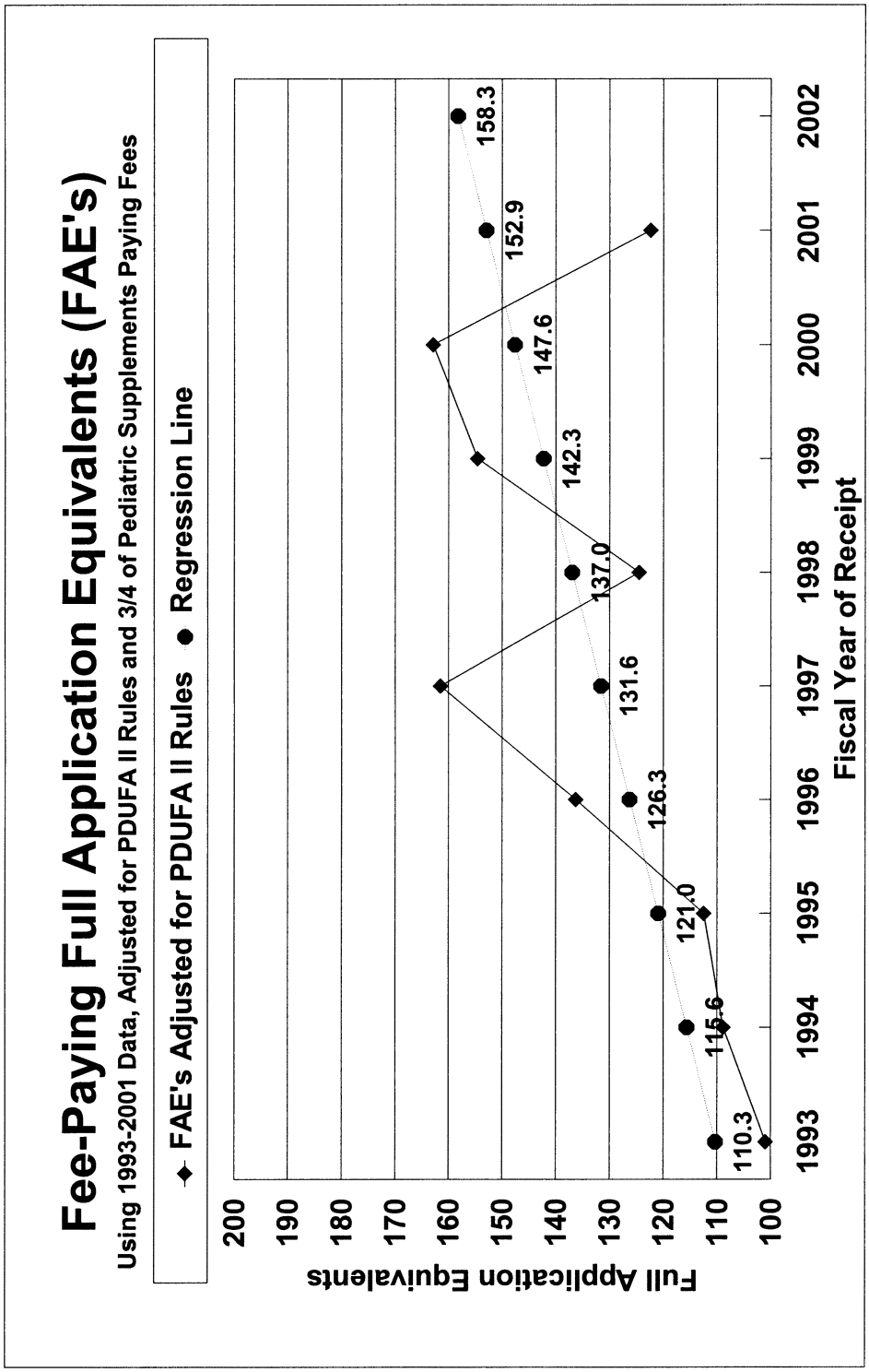

The total FY 2002 application fee revenue is estimated by multiplying the adjusted application fee rate ($313,320) by the number of applications projected to qualify for fees in FY 2002 (158.3), for a total estimated application fee revenue in FY 2001 of $49,598,556. This is the amount of revenue that FDA is also expected to derive both from establishment fees and from product fees.

IV. Adjustment for Excess Collections in Previous Years

Under the provisions of PDUFA II, if the agency collects more fees than were provided for in appropriations in any year after 1997, FDA is required to reduce its anticipated fee collections in a subsequent year by that amount (21 U.S.C. 379h(g)(4)).

In FY 1998, Congress appropriated a total of $117,122,000 to FDA in PDUFA II fee revenue. To date, collections for FY 1998 total $117,737,470---a total of $615,470 in excess of the appropriation limit. This is the only fiscal year since 1997 in which FDA has collected more

in PDUFA II fees than Congress appropriated.

FDA also has requests for waivers or reductions of FY 1998 fees pending. For this reason FDA is not reducing its FY 2002 fees to offset excess collections at this time. An offset will be considered in a future year, if FDA still has collections in excess of appropriations for FY 1998 after the pending requests for FY 1998 waivers and reductions have been resolved.

V. Fee Calculations for Establishment and Product Fees

A. Establishment Fees

At the beginning of FY 2001, the establishment fee was based on an estimate of 347 establishments subject to fees. For FY 2001, 379 establishments qualified for and were billed for establishment fees, before all decisions on requests for waivers or reductions were made. FDA estimates that a total of 25 establishment fee waivers or reductions will be made for FY 2001, for a net of 354 fee-paying establishments, and will use this number for its FY 2002 estimate of establishments paying fees, after taking waivers and reductions into account. The fee per establishment is determined by dividing the adjusted total fee revenue to be derived from establishments ($49,598,556), by the estimated 354 establishments, for an establishment fee rate for FY 2002 of $140,109 (rounded to the nearest dollar).

B. Product Fees

At the beginning of FY 2001, the product fee was based on an estimate that 2,314 products would be subject to product fees. By the end of FY 2001, 2,348 products qualified and were billed for product fees before all decisions on requests for waivers or reductions were made. Assuming that there will be about 55 waivers and reductions made, FDA estimates that 2,293 products will qualify for product fees in FY 2002, after allowing for waivers and reductions, and will use this number for its FY 2002 estimate. Accordingly, the FY 2002 product fee rate is determined by dividing the adjusted total fee revenue to be derived from product fees ($49,598,556) by the estimated 2,293 products for a product fee rate of $21,630 (rounded to the nearest dollar).

VI. Adjusted Fee Schedule for FY 2002

The fee rates for FY 2002 are set out in table 2 of this document:

TABLE 2.

Fee Category	Fee Rates for FY 2002
Applications	
Requiring clinical data	$313,320
Not requiring clinical data	$156,660
Supplements requiring clinical data	$156,660
Establishments	$140,109
Products	$21,630

VII. Implementation of Adjusted Fee Schedule

A. Application Fees

Any application or supplement subject to fees under PDUFA II that is submitted after January 16, 2002, must be accompanied by the appropriate application fee established in the new fee schedule. Payment must be made in U.S. currency by check, bank draft, or U.S. postal money order payable to the order of the Food and Drug Administration. Please include the user fee ID number on your check. Your check can be mailed to: Food and Drug Administration, P.O. Box 360909, Pittsburgh, PA 15251–6909.

If checks are to be sent by a courier that requests a street address, the courier can deliver the checks to: Food and Drug Administration (360909), Mellon Client Service Center, rm. 670, 500 Ross St., Pittsburgh, PA 15262–0001. (Note: This Mellon Bank Address is for courier delivery only.)

Please make sure that the FDA P.O. Box number (P.O. Box 360909) is on the enclosed check.

FDA will bill applicants who submitted lower application fees from October 1 to January 16, 2002, for the difference between the amount they submitted and the amount specified in the Adjusted Fee Schedule for FY 2002.

B. Establishment and Product Fees

By [*insert date of publication in the* **Federal Register**], FDA will issue invoices for establishment and product fees for FY 2002 under the new Adjusted Fee Schedule. Payment will be due by January 31, 2002. FDA will issue invoices for any products and establishments subject to fees for FY 2002 that qualify for fees after the January 2002 billing.

Dated: January 10, 2002.

Margaret M. Dotzel,

Associate Commissioner for Policy.

[FR Doc. 02–1068 Filed 1–11–02; 2:57 pm]

BILLING CODE 4160–01–S

DEPARTMENT OF HEALTH AND HUMAN SERVICES

Food and Drug Administration

[Docket No. 97D–0318]

''Guidance for Industry: Revised Preventive Measures to Reduce the Possible Risk of Transmission of Creutzfeldt-Jakob Disease (CJD) and Variant Creutzfeldt-Jakob Disease (vCJD) by Blood and Blood Products;'' Availability

AGENCY: Food and Drug Administration, HHS.

ACTION: Notice.

SUMMARY: The Food and Drug Administration (FDA) is announcing the availability of a document entitled ''Guidance for Industry: Revised Preventive Measures to Reduce the Possible Risk of Transmission of Creutzfeldt-Jakob Disease (CJD) and Variant Creutzfeldt-Jakob Disease (vCJD) by Blood and Blood Products'' dated January 2002. The new recommendations are intended to minimize the possible risk of CJD and vCJD transmission from blood and blood products. The guidance document provides comprehensive current recommendations to all registered blood and plasma establishments for deferral of donors with possible exposure to the agent of vCJD. The guidance document announced in this notice finalizes the draft guidance of the same title, dated August 2001, and supersedes the guidance document entitled ''Revised Preventive Measures to Reduce the Possible Risk of Transmission of Creutzfeldt-Jakob Disease (CJD) and New Variant Creutzfeldt-Jakob Disease (nvCJD) by Blood and Blood Products'' dated November 1999.

DATES: Submit written or electronic comments on agency guidance documents at any time.

ADDRESSES: Submit written requests for single copies of this guidance to the Office of Communication, Training, and Manufacturers Assistance (HFM–40), Center for Biologics Evaluation and Research (CBER), Food and Drug Administration, 1401 Rockville Pike, Rockville, MD 20852–1448. Send one self-addressed adhesive label to assist the office in processing your requests. The document may also be obtained by mail by calling the CBER Voice Information System at 1–800–835–4709 or 301–827–1800, or by fax by calling the FAX Information System at 1–888–CBER–FAX or 301–827–3844. See the **SUPPLEMENTARY INFORMATION** section for electronic access to the guidance document.

Submit written comments on the guidance document to the Dockets Management Branch (HFA–305), Food and Drug Administration, 5630 Fishers Lane, rm. 1061, Rockville, MD 20852. Submit electronic comments to http://www.fda.gov/dockets/ecomments.

FOR FURTHER INFORMATION CONTACT: Valerie A. Butler, Center for Biologics Evaluation and Research (HFM–17), Food and Drug Administration, 1401 Rockville Pike, Rockville, MD 20852–1448, 301–827–6210.

SUPPLEMENTARY INFORMATION:

I. Background

FDA is announcing the availability of a document entitled ''Guidance for Industry: Revised Preventive Measures to Reduce the Possible Risk of Transmission of Creutzfeldt-Jakob Disease (CJD) and Variant Creutzfeldt-Jakob Disease (vCJD) by Blood and Blood Products'' dated January 2002. This guidance document contains comprehensive revised recommendations based upon advisory committee discussions, internal Public Health Service and FDA deliberations, and public comments. FDA has developed recommendations for donor deferral, and product retrieval, quarantine, and disposition based upon consideration of risk in the donor and product, and the effect that withdrawals and deferrals might have on the supply of life- and health-sustaining blood components and plasma derivatives. The new recommendations are intended to minimize the possible risk of CJD and vCJD transmission from blood products while maintaining their availability. The guidance document announced in this notice finalizes the draft guidance of the same title, dated August 2001, announced in the **Federal Register** of August 29, 2001 (66 FR 45683). The guidance document also supersedes the guidance document entitled ''Revised Preventive Measures to Reduce the Possible Risk of Transmission of Creutzfeldt-Jakob Disease (CJD) and New Variant Creutzfeldt-Jakob Disease (nvCJD) by Blood and Blood Products'' dated November 1999 (64 FR 65715, November 23, 1999).

This guidance is being issued consistent with FDA's good guidance practices regulation (21 CFR 10.115). This guidance document represents the agency's current thinking on this topic. It does not create or confer any rights for or on any person and does not operate to bind FDA or the public. An alternative approach may be used if such approach satisfies the requirement of the applicable statutes and regulations.

II. Comments

Interested persons may, at any time, submit written comments to the Dockets Management Branch (address above) regarding this guidance document. Two copies of any comments are to be submitted, except individuals may submit one copy. Comments should be identified with the docket number found in the brackets in the heading of this document. A copy of the document and received comments are available for public examination in the Dockets Management Branch between 9 a.m. and 4 p.m., Monday through Friday.

III. Electronic Access

Persons with access to the Internet may obtain the document at either http://www.fda.gov/cber/guidelines.htm or http://www.fda.gov/ohrms/dockets/default.htm.

Dated: January 7, 2002.

Margaret M. Dotzel,

Associate Commissioner for Policy.

[FR Doc. 02–1026 Filed 1–15–02; 8:45 am]

BILLING CODE 4160–01–S

DEPARTMENT OF HOUSING AND URBAN DEVELOPMENT

[Docket No. FR–4739–N–01]

Notice of Proposed Information Collection: Comment Request; Land Sales Registration, Purchaser's Revocation Rights, Sales Practices and Standards, and Formal Procedures and Rules of Practice

AGENCY: Office of the Assistant Secretary for Housing—Federal Housing Commissioner, HUD.

ACTION: Notice.

SUMMARY: The proposed information collection requirement described below will be submitted to the Office of Management and Budget (OMB) for review, as required by the Paperwork Reduction Act. The Department is soliciting public comments on the subject proposal.

DATES: *Comments Due Date:* March 18, 2002.

ADDRESSES: Interested persons are invited to submit comments regarding this proposal. Comments should refer to the proposal by name and/or OMB Control Number and should be sent to: Wayne Eddins, Reports Management Officer, Department of Housing and Urban Development, 451 7th Street, SW., L'Enfant Plaza Building, Room 8001, Washington, DC 20410.

FOR FURTHER INFORMATION CONTACT: Ivy Jackson, Acting Director, Interstate Land Sales/RESPA Division, Office of Consumer and Regulatory Affairs, Department of Housing and Urban Development, 451 7th Street, SW, Washington, DC 20410, telephone (202) 708–0502 (this is not a toll free number) for copies of the proposed forms and other available information.

SUPPLEMENTARY INFORMATION: The Department is submitting the proposed information collection to OMB for review, as required by the Paperwork Reduction Act of 1995 (44 U.S.C. chapter 35, as amended).

This notice is soliciting comments from members of the public and affected agencies concerning the proposed collection of information to: (1) Evaluate whether the proposed collection is necessary for the proper performance of the functions of the agency, including whether the information will have practical utility; (2) Evaluate the accuracy of the agency's estimate of the burden of the proposed collection of information; (3) Enhance the quality, utility, and clarity of the information to be collected; and (4) Minimize the burden of the collection of information on those who are to respond; including the use of appropriate automated collection techniques or other forms of information technology, *e.g.*, permitting electronic submission of responses.

This Notice also lists the following information:

Title of Proposal: Land Registration, Purchaser's Revocation Rights, Sales Practices and Standards, and Formal Procedures and Rules of Practice.

OMB Control Number, if applicable: 2502–0243.

Description of the need for the information and proposed use: The Interstate Land Sales Full Disclosure Act protects consumers from fraud in the sale of land by requiring developers of non-exempt subdivisions to register with HUD and give purchasers a

property report. The property report discloses facts about the land so the purchaser can make an informed lot purchase and tells them of their revocation rights. Developers are required to register subdivisions of 100 or more non-exempt lots with HUD.

Agency form numbers, if applicable: None.

Estimation of the total numbers of hours needed to prepare the information collection including number of respondents, frequency of response, and hours of response: There is a total of 19,579 annual burden hours estimated for a total of approximately 5,270 respondents. The frequency of response is on occasion, annually, and third-party disclosure totaling 117,958 total annual responses.

Status of the proposed information collection: Extension of a currently approved information collection.

Authority: The Paperwork Reduction Act of 1995, 44 U.S.C., Chapter 35, as amended.

Dated: January 6, 2002.

John C. Weicher,

Assistant Secretary for Housing—Federal Housing Commissioner.

[FR Doc. 02–1031 Filed 1–15–02; 8:45 am]

BILLING CODE 4210–27–M

DEPARTMENT OF HOUSING AND URBAN DEVELOPMENT

[Docket No. FR–4630–FA–31]

Housing Counseling Program Announcement of Funding Awards for Fiscal Year 2001

AGENCY: Office of the Assistant Secretary for Housing-Federal Housing Commissioner, HUD.

ACTION: Announcement of funding awards.

SUMMARY: In accordance with section 102(a)(4)(C) of the Department of Housing and Urban Development Reform Act of 1989, this announcement notifies the public of funding decisions made by the Department in a SuperNOFA competition for funding of HUD-approved counseling agencies to provide counseling services. This announcement contains the names and addresses of the agencies selected for funding and the amount. Additionally, this announcement outlines various noncompetitive housing counseling awards made by the Department.

FOR FURTHER INFORMATION CONTACT: Margaret Burns, Director, Program Support Division, Room 9166, Office of Single Family Housing, Department of Housing and Urban Development, 451 Seventh Street, SW., Washington, DC 20410, telephone (202) 708–2121. Hearing- or speech-impaired individuals may access this number by calling the Federal Information Relay Service on 1–800–877–8339 or (202) 708–9300. (With the exception of the ''800'' number, these are not toll free numbers.)

SUPPLEMENTARY INFORMATION: The Housing Counseling Program is authorized by section 106 of the Housing and Urban Development Act of 1968 (12 U.S.C. 1701x). HUD enters into agreement with qualified public or private nonprofit organizations to provide housing counseling services to low- and moderate-income individuals and families nationwide. The services include providing information, advice and assistance to renters, first-time homebuyers, homeowners, and senior citizens in areas such as pre-purchase counseling, financial management, property maintenance and other forms of housing assistance to improve the clients' housing conditions and meet the responsibilities of tenancy and homeownership.

The purpose of the grant is to assist HUD-approved housing counseling agencies in providing housing counseling services to HUD-related and other clients. HUD funding of approved housing counseling agencies is not guaranteed and when funds are awarded, a HUD grant does not cover all expenses incurred by an agency to deliver housing counseling services. Counseling agencies must actively seek additional funds from other sources such as city, county, state and federal agencies and from private entities to ensure that they have sufficient operating funds. The availability of housing counseling program grants depends upon whether the U.S. Congress appropriates funds for this purpose, the amount of those funds, and the outcome of the competitions for award.

The 2001 grantees announced in Appendix A of this Notice were selected for funding through a competition announced in a **Federal Register** notice published on February 26, 2001 (66 FR 11841) for the housing counseling program. Applications submitted for each competition were scored and selected for funding on the basis of selection criteria contained in the Notice. HUD awarded $17.548 million in housing counseling grants to 369 housing counseling agencies nationwide: 340 local agencies, 11 intermediaries, and 18 State housing finance agencies.

Additionally, HUD distributed $734,500 in noncompetitive housing counseling grants. Specifically, $584,500 was awarded to the American Association of Retired Persons (AARP) to provide housing counseling services related to the Home Equity Conversion Program (HECM). HUD also awarded 7 housing counseling grants, totaling $150,000, to provide Native Americans with quality homeownership education and counseling services, and to build the capacity of organizations in Indian Country to provide housing counseling. Noncompetitive awards are announced in Appendix B of this notice.

In accordance with section 102(a)(4)(C) of the Department of Housing and Urban Development Reform Act of 1989 (103 Stat. 1987, 42 U.S.C. 3545), the Department is publishing the names, addresses, and award amounts as provided in Appendix A.

The Catalog of Federal Domestic Assistance number for this program is 14.169.

Dated: December 27, 2001.

John C. Weicher,

Assistant Secretary for Housing-Federal Housing Commissioner.

Appendix A

Competitive/SuperNOFA Grants

Intermediary Organizations (11)

ACORN HOUSING CORPORATION, 846 N. Broad Street, Philadelphia, PA 19130, *Amount Awarded:* $1,032,192.00.

Catholic Charities USA, 1731 King Street, Suite 200, Alexandria, VA 22314, *Amount Awarded:* $971,280.00.

Citizens' Housing and Planning Association, 18 Tremont Street, Suite 401, Boston, MA 02108, *Amount Awarded:* $250,000.00.

Housing Opportunities, Inc., 133 Seventh Avenue, P.O. Box 9, McKeesport, PA 15132, *Amount Awarded:* $1,056,768.00.

National Council of La Raza, 1111 19th Street, NW, Suite 1000, Washington, DC 20036, *Amount Awarded:* $1,081,344.00.

National Foundation for Credit Counseling, 801 Roeder Road, Suite 900, Silver Spring, MD 20910, *Amount Awarded:* $1,155,072.00.

National Urban League, 120 Wall Street, New York, NY 10005, *Amount Awarded: Amount Awarded:* $1,155,072.00.

Neighborhood Reinvestment Corporation, 1325 G Street, NW, Suite 800, Washington, DC 20005–3100, *Amount Awarded:* $1,155,072.00.

The Congress of National Black Churches, Inc., 1225 Eye Street, NW, Suite 750, Washington, DC 20005–3914, *Amount Awarded:* $712,704.00.

The Housing Partnership Network, Inc., 160 State Street, 5th Floor, Boston, MA 02109, *Amount Awarded:* $1,130,496.00.

West Tennessee Legal Services, Inc., 210 West Main Street, P.O. Box 2066, Jackson, TN 38302–2066, *Amount Awarded:* $250,000.00.

State Housing Finance Agencies (18)

Atlanta (SHFA)

Georgia Housing & Finance Authority, 60 Executive Park South, Atlanta, GA 30329–2231, *Amount Awarded:* $64,672.00.
Kentucky Housing Corporation, 1231 Louisville Road, Frankfort, KY 40601, *Amount Awarded:* $49,420.00.
Mississippi Home Corporation, 735 Riverside Drive, P.O. Box 23369, Jackson, MS 39225–3369, *Amount Awarded:* $61,621.00.
South Carolina State Housing Finance & Development Auth., 919 Bluff Road, Columbia, SC 29201, *Amount Awarded:* $58,572.00.
Virgin Islands Housing Finance Authority, 210–3A Altona (Frostco Building, Ste 101, St. Thomas, VQ 00802, *Amount Awarded:* $20,000.00.

Denver (SHFA)

New Mexico Mortgage Finance Authority, 344 4th Street SW, Albuquerque, NM 87102, *Amount Awarded:* $115,000.00.
North Dakota Housing Finance Agency, P.O. Box 1535, Bismarck, ND 58502–1535, *Amount Awarded:* $50,000.00.
South Dakota Housing Development Authority, PO Box 1237, Pierre, SD 57501–1237, *Amount Awarded:* $65,000.00.

Philadelphia (SHFA)

Delaware State Housing Authority, Carvel State Building, 801 North French Street—10th Floor, Wilmington, DE 19801, *Amount Awarded:* $25,722.00.
Maine State Housing Authority, 353 Water Street, Augusta, ME 04330–4633, *Amount Awarded:* $43,967.00.
Maryland Department of Housing and Community Development, 100 Community Place, Crownsville, MD 21032, *Amount Awarded:* $24,063.00.
New Hampshire Housing Finance Authority, P.O. Box 5087, Manchester, NH 03108, *Amount Awarded:* $26,551.00.
Pennsylvania Housing Finance Agency, 2101 North Front St., Harrisburg, PA 17105, *Amount Awarded:* $41,479.00.
Rhode Island Housing & Mortgage Finance Corporation, 44 Washington St., Providence, RI 02903, *Amount Awarded:* $43,967.00.
State of Michigan, 401 S. Washington Square, P.O. Box 30044—MSHDA, Lansing, MI 48909, *Amount Awarded:* $32,357.00.
Virginia Housing Development Authority, 601 S. Belvidere St., Richmond, VA 23220, *Amount Awarded:* $29,039.00.

Santa Ana (SHFA)

Idaho Housing and Finance Association, P.O. BOX 7899, 565 Myrtle, Boise, ID 83707–1899, *Amount Awarded:* $94,191.00.
Washington State Housing Finance Commission, 1000 Second Avenue, Suite 2700, Seattle, WA 98104–1046, *Amount Awarded:* $130,094.00.

Local Organizations (340)

Atlanta (HOC)

Access Living of Metropolitan Chicago, 614 West Roosevelt Road, Chicago, IL 60607, *Amount Awarded:* $26,757.00.
Affordable Housing Coalition, 34 Wall Street, Suite 607, Asheville, NC 28801, *Amount Awarded:* $20,000.00.
Agency Metropolitan Program Services, 3210 W. Arthington Street, Chicago, IL 60624, *Amount Awarded:* $4,146.00.
Alabama Council on Human Relations, P.O. Drawer 1632, 319 West Glenn Avenue, Auburn, AL 36831–1632, *Amount Awarded:* $15,146.00.
Anderson Housing Authority, 528 West 11th Street, Anderson, IN 46016, *Amount Awarded:* $24,312.00.
Appalachian Housing & Redevelopment (Rome Housing Authority, 800 North Fifth Avenue, Rome, GA 30162, *Amount Awarded:* $19,423.00.
Birmingham Urban League, Inc., 1717 4th Avenue North, P.O. Box 11269, Birmingham, AL 35202–1269, *Amount Awarded:* $29,812.00.
C.C.C.S. of Middle Tennessee, Inc., P.O. Box 160328, Nashville, TN 37216–0328, *Amount Awarded:* $4,146.00.
Campbellsville Housing and Redevelopment Authority, P.O. Box 597, 400 Ingram Ave., Campbellsville, KY 42719, *Amount Awarded:* $10,870.00.
Carolina Regional Legal Services, Inc., P.O. Box 479, 279 West Evans Street, Florence, SC 29503–0479, *Amount Awarded:* $32,868.00.
CEFS Economic Opportunity Corporation, 1805 S. Banker Street, P.O. Box 928, Effingham, IL 62401, *Amount Awarded:* $16,979.00.
CEIBA Housing & Economic Development Corporation, Ave. Lauro Pinero #252, P.O. Box 203, Ceiba, PR 00735, *Amount Awarded:* $18,201.00.
Central Florida Community Development Corp., P.O. Box 15065, Daytona Beach, FL 32115, *Amount Awarded:* $12,090.00.
Chicago Commons, 3645 West Chicago Avenue, Chicago, IL 60651, *Amount Awarded:* $19,145.00.
Citizens for Affordable Housing, Inc., 1719 West End Avenue, Suite 607W, Nashville, TN 37203, *Amount Awarded:* $15,757.00.
City of Albany, Georgia, 230 S. Jackson St., Suite 315, Albany, GA 31701, *Amount Awarded:* $5,368.00.
City of Bloomington, P.O. Box 100, 401 North Morton, Bloomington, IN 47402, *Amount Awarded:* $24,925.00.
Cobb Housing, Inc., 700 Sandy Plains Road, Suite B–8, Marietta, GA 30066, *Amount Awarded:* $23,701.00.
Community Action & Community Development Agency, P.O. Box 1788, 207 Commerce Circle, SW, Decatur, AL 35602, *Amount Awarded:* $31,034.00.
Community Action Agency Huntsville/Madison & Limestone, 3516 Stringfield Road, P.O. Box 3975, Huntsville, AL 35810–0975, *Amount Awarded:* $27,979.00.
Community Action Agency of Northwest Al, 745 Thompson Street, Florence, AL 35630, *Amount Awarded:* $9,000.00.
Community Action of Greater Indianapolis, Inc., 2445 North Meridian Street, Indianapolis, IN 46208, *Amount Awarded:* $12,701.00.
Community and Economic Development Assoc. of Cook County, 208 South LaSalle, Suite 1900, Chicago, IL 60604–1001, *Amount Awarded:* $22,479.00.
Community Equity Investments, Inc. (CEII), 302 North Barcelona Street, Pensacola, FL 32501, *Amount Awarded:* $19,000.00.
Consumer Credit Counseling Service of Western NC, 50 South French Broad Ave., Suite 227, Ashville, NC 28801, *Amount Awarded:* $33,479.00.
Consumer Credit Counseling of NWI, Inc., 3637 Grant Street, Gary, IN 46408–1439, *Amount Awarded:* $20,500.00.
Consumer Credit Counseling Service of Family Counseling CEN, 220 Coral Sands Drive, Rockledge, FL 32955, *Amount Awarded:* $18,812.00.
Consumer Credit Counseling Service of FL. Gulf Coast, Inc., 5201 W. Kennedy Blvd., Suite 110, Tampa, FL 33609, *Amount Awarded:* $26,146.00.
Consumer Credit Counseling Service of Forsyth County, Inc., 8064 North Point Boulevard, Suite 204, Winston-Salem, NC 27106, *Amount Awarded:* $31,034.00.
Consumer Credit Counseling Service of South FL, 11645 Biscayne Blvd. #205, No. Miami, FL 33181, *Amount Awarded:* $18,812.00.
Consumer Credit Counseling Service of West Florida, 14 Palafox Place, Pensacola, FL 32501, *Amount Awarded:* $24,312.00.
Cumberland Community Action Program, Inc., P.O. Box 2009, 316 Green Street, Fayetteville, NC 28302, *Amount Awarded:* $30,000.00.
Davidson County Community Action, Inc., P.O. Box 389, 701 South Salisbury Street, Lexington, NC 27293–0389, *Amount Awarded:* $4,146.00.
Dekalb Fulton Housing Counseling Center, Inc., 4151 Memorial Drive, Suite 107–E, Decatur, GA 30032, *Amount Awarded:* $27,979.00.
Dupage Homeownership Center, Inc., 1333 North Main Street, Wheaton, IL 60187, *Amount Awarded:* $28,000.00.
Economic Opportunity for Savannah-Chatham County Area, Inc., 618 West Anderson Street, Savannah, GA 31401, *Amount Awarded:* $22,479.00.
Elizabeth City State University, 1704 Weeksville Road, Campus Box 761, Elizabeth City, NC 27909, *Amount Awarded:* $26,145.00.
Family and Children's Services of Chattanooga, Inc., Osborne Office Park, 6000 Building, Suite 2300, Chattanooga, TN 37411, *Amount Awarded:* $10,868.00.
Family Service Center, 1800 Main Street, Columbia, SC 29201, *Amount Awarded:* $33,479.00.
Fulton-Atlanta Community Action Authority, Inc., 1690 Chantilly Drive, Atlanta, GA 30324, *Amount Awarded:* $18,812.00.
Gainesville/Hall County Neighborhood Revitalization, P.O. Box 642, Gainesville, GA 30503, *Amount Awarded:* $18,812.00.
Gulf Coast Community Action Agency, Inc., 443 Security Square, P.O. Box 519, Gulfport, MS 39502–0519, *Amount Awarded:* $10,868.00.
Gwinnett Housing Resource Partnership, Inc., 3453 Holcomb Bridge Road, Suite 140, Norcross, GA 30092, *Amount Awarded:* $25,534.00.
Hammond Housing Authority, 7329 Columbia Circle—West, Hammond, IN 46324, *Amount Awarded:* $27,979.00.

Homes in Partnership, Inc., 235 E. Fifth Street, P. O. Box 761, Apopka, FL 32704–0761, *Amount Awarded:* $23,701.00.
Hoosier Uplands Economic Development Corporation, 521 West Main Street, Mitchell, IN 47446, *Amount Awarded:* $15,000.00.
Hope of Evansville, Inc., 608 Cherry Street, Evansville, IN 47713, *Amount Awarded:* $25,534.00.
Housing and Economic Leadership Partners, Inc., 485 Huntington Road, Suite 200, Athens, GA 30606, *Amount Awarded:* $21,868.00.
Housing and Neighborhood Dev. Serv of Central Florida, 990 North Bennett Avenue, Winter Park, FL 32789, *Amount Awarded:* $20,034.00.
Housing Authority of the Birmingham District, 1826 3rd Avenue South, Birmingham, AL 35233, *Amount Awarded:* $24,312.00.
Housing Authority of the City of Fort Wayne, P.O. Box 13489, 2013 South Anthony Blvd., Fort Wayne, IN 46869–3489, *Amount Awarded:* $27,979.00.
Housing Authority of the City of High Point, 500 East Russell Avenue, Post Office Box 1779, High Point, NC 27260, *Amount Awarded:* $24,923.00.
Housing Authority of the County of Lake, IL, 33928 North Route 45, Grayslake, IL 60030, *Amount Awarded:* $5,979.00.
Housing Development Corporation of St. Joseph County, 1200 County City Building, South Bend, IN 46601, *Amount Awarded:* $20,672.00.
Housing Education and Economic Development, 3405 Medgar Evers Blvd., Jackson, MS 39213, *Amount Awarded:* $10,868.00.
Johnston-Lee Community Action, Inc., P.O. Drawer 711, 1102 Massey Street, Smithfield, NC 27577, *Amount Awarded:* $20,000.00.
Knoxville Legal Aid Society, Inc., 502 S. Gay Street, Suite 404, Knoxville, TN 37902, *Amount Awarded:* $16,979.00.
Lake County, 2293 North Main Street, Crown Point, IN 46307, *Amount Awarded:* $18,201.00.
Latin American Association, 2665 Buford Highway, Atlanta, GA 30324, *Amount Awarded:* $22,479.00.
Latin United Community Housing Association, 3541 W. North Avenue, Chicago, IL 60647, *Amount Awarded:* $31,646.00.
Legal Assistance Foundation of Chicago, 111 West Jackson Blvd., Chicago, IL 60604, *Amount Awarded:* $27,368.00.
Legal Services of Upper East TN, Inc., 311 West Walnut Street, P.O. Drawer 360, Johnson City, TN 37605–0360, *Amount Awarded:* $24,312.00.
Lincoln Hills Development Corporation, 302 Main Street, P.O. Box 336, Tell City, IN 47586, *Amount Awarded:* $10,000.00.
Louisville Urban League, 1535 West Broadway, Louisville, KY 40203, Amount Awarded: $25,534.00.
Manatee Coalition for Affordable Housing, Inc., 319 6th Avenue West, Bradenton, FL 34205, *Amount Awarded:* $17,590.00.
Manatee Opportunity Council, Inc., 369 6th Avenue West, Bradenton, FL 34205, *Amount Awarded:* $13,312.00.
Memphis Area Legal Services, 109 N. Main, 2 Floor, Memphis, TN 38103–5013, *Amount Awarded:* $20,034.00.
Miami Beach Community Development Corporation, 1205 Drexel Avenue, Miami Beach, FL 33139, *Amount Awarded:* $18,812.00.
Mid-Florida Housing Partnership, Inc., P.O. Box 1345, 330 North Street, Daytona Beach, FL 32115, *Amount Awarded:* $18,812.00.
Mobile Housing Board, 151 South Claiborne Street, P. O. Box 1345, Mobile, AL 36633–1345, *Amount Awarded:* $31,646.00.
Muncie Homeownership and Development Center, 407 South Walnut Street, Muncie, IN 47305, *Amount Awarded:* $14,750.00.
Northeastern Community Development Corp., P.O. Box 367, Camden, NC 27921, *Amount Awarded:* $14,534.00.
Northwestern Regional Housing Authority, P.O. Box 2510, Hwy. 105 Ext., Boone, NC 28607, *Amount Awarded:* $31,646.00.
Ocala Housing Authority, 233 S.W. 3RD Street, Ocala, FL 34474, *Amount Awarded:* $25,000.00.
Palmetto Legal Services, 2109 Bull Street, P.O. Box 2267, Columbia, SC 29202, *Amount Awarded:* $5,368.00.
Purchase Area Housing Corporation, P.O. Box 588, Mayfield, KY 42066, *Amount Awarded:* $15,000.00.
Realtor-Community Housing Foundation, 2250 Regency Road, Lexington, KY 40503, *Amount Awarded:* $8,423.00.
Residential Resources, Inc., 602 Gallatin Road, Suite 102, Nashville, TN 37206, *Amount Awarded:* $18,201.00.
Rogers Park Community Council, 1530 W. Morse Avenue, Chicago, IL 60626, *Amount Awarded:* $14,534.00.
Sacred Heart Southern Missions Housing Corp., 6144 Highway 161 North, P.O. Box 365, Walls, MS 38680, *Amount Awarded:* $21,257.00.
Sandhills Community Action Program, Inc., P.O. Box 937, 103 Saunders Street, Carthage, NC 28327–0000, *Amount Awarded:* $20,646.00.
South Suburban Housing Center, 18220 Harwood Avenue, Suite 1, Homewood, IL 60430, *Amount Awarded:* $19,423.00.
Spanish Coalition for Housing, 4035 West North Avenue, Chicago, IL 60639, *Amount Awarded:* $31,646.00.
Tallahassee Urban League, Inc., 923 Old Bainbridge Road, Tallahassee, FL 32303, *Amount Awarded:* $7,812.00.
Tenant Services & Housing Counseling, Inc., 136 North Martin Luther King Blvd., Lexington, KY 40507, *Amount Awarded:* $30,000.00.
The Agricultural & Labor Program, Inc., P.O. Box 3126, Winter Haven, FL 33885, *Amount Awarded:* $3,535.00.
The Housing Authority of the City of Montgomery, 1020 Bell Street, Montgomery, AL 36104, *Amount Awarded:* $33,479.00.
Trident United Way, 6296 Rivers Avenue, P. O. Box 63305, North Charleston, SC 29419, *Amount Awarded:* $18,812.00.
Twin Rivers Opportunities, Inc., P.O. Box 1482, New Bern, NC 28563, *Amount Awarded:* $9,600.00.
Unified Government of Athens-Clarke County, 155 E. Washington St., P.O. Box 1868, Athens, GA 30603, *Amount Awarded:* $18,812.00.
Urban League of Greater Columbus, 802 First Avenue, Columbus, GA 31901, *Amount Awarded:* $27,979.00.
Wateree Community Action, Inc., Post Office Box 1838, 13 South Main Street, Sumter, SC 29150, *Amount Awarded:* $10,000.00.
West Perrine Community Development Corporation, 17623 Homestead Avenue, Miami, FL 33157, *Amount Awarded:* $19,423.00.
Willow Nonprofit Housing, Inc., P. O. Box 383, 200 A Commerce Street, Hayneville, AL 36040, *Amount Awarded:* $30,000.00.
Wilson Community Improvement Association, Inc., 504 E. Green Street, Wilson, NC 27893, *Amount Awarded:* $15,146.00.
Woodbine Community Organization, 222 Oriel Avenue, Nashville, TN 37210, *Amount Awarded:* $16,368.00.

Denver (HOC)

Adams County Housing Authority, 7190 Colorado Blvd., Commerce City, CO 80022, *Amount Awarded:* $29,692.00.
Anoka County Community Action Programs, Inc., 1201 89th Avenue NE, Suite 345, Anoka County, Blaine, MN 55343, *Amount Awarded:* $4,203.00.
Avenida Guadalupe Association, 1327 Guadalupe Street, San Antonio, TX 78207, *Amount Awarded:* $18,579.00.
Better Family Life, Inc., 724 North Union, Suite 301, St. Louis, MO 63108, *Amount Awarded:* $20,061.00.
Black Hills Legal Services, Inc., P.O. Box 1500, Rapid City, SD 57709–1500, *Amount Awarded:* $20,000.00.
Boulder County Housing Authority, P.O. Box 471, Boulder, CO 80306, *Amount Awarded:* $28,950.00.
Brothers Redevelopment, Inc., 2250 Eaton St., Garden Level, Suite B, Denver, CO 80214, *Amount Awarded:* $19,541.00.
Carver County Housing & Redevelopment Authority, 705 Walnut Street, Chaska, MN 55318, *Amount Awarded:* $7,687.00.
CCCS of Central Oklahoma, Inc., 3230 N. Rockwell Avenue, Bethany, OK 73008, *Amount Awarded:* $32,359.00.
CCCS of Greater Dallas, Inc., 8737 King George Dr., Suite 200, Dallas, TX 75235, *Amount Awarded:* $38,805.00.
CCCS of Greater San Antonio, 6851 Citizens Parkway, Suite 100, San Antonio, TX 78229, *Amount Awarded:* $7,687.00.
CCCS of Salina, 1201 West Walnut, Salina, KS 67401, *Amount Awarded:* $19,541.00.
Cedar City Housing Authority, 364 South 100 East, Cedar City, UT 84720, *Amount Awarded:* $3,172.00.
Center for A.I.D./CCCS of Greater Siouxland, 715 Douglas Street, Sioux City, IA 51101, *Amount Awarded:* $16,578.00.
Central City Housing Development Corp., 2020 Jackson Avenue, New Orleans, LA 70113, *Amount Awarded:* $7,687.00.
Chickasaw Nation, Division of Housing, P.O. Box 788, Ada, OK 74821–0788, *Amount Awarded:* $12,873.00.
City of Aurora—Home Ownership Assistance Program, 9801 E. Colfax Ave., Aurora, CO 80010, *Amount Awarded:* $19,205.00.
City of Des Moines (Services for Homeowner's Program (Shop)),

Department of Community Development, 602 East 1st Street, Des Moines, IA 50309–1881, *Amount Awarded:* $4,723.00.
City of Fort Worth, Housing Department, 1000 Throckmorton Street, Fort Worth, TX 76102, *Amount Awarded:* $30,655.00.
City of San Antonio, 115 Plaza de Armas, Suite 230, San Antonio, TX 78205, *Amount Awarded:* $30,433.00.
City Vision Ministries, Inc., 1321 N. 7th Street, Kansas City, KS 66101, *Amount Awarded:* $3,241.00.
Colorado Housing Enterprises/Colorado Rural Housing Dev Corp, 3621 West 73rd Avenue, Suite C, Westminster, CO 80030, *Amount Awarded:* $3,241.00.
Community Action Agency of Oklahoma City and OK/CN Counties, 1900 NW 10th Street, Oklahoma City, OK 73106, *Amount Awarded:* $18,466.00.
Community Aaction for Suburban Hennepin, 33 10th Avenue South, Suite 150, Hopkins, MN 55343, *Amount Awarded:* $27,691.00.
Community Action Project of Tulsa County, 717 S. Houston Ave, Suite 200, Tulsa, OK 74127, *Amount Awarded:* $22,283.00.
Community Action Services, 257 East Center Street, Provo, UT 84606, *Amount Awarded:* $26,500.00.
Community Action, Inc. of Rock and Walworth Counties, 2300 Kellog Avenue, Janesville, WI 53546, *Amount Awarded:* $12,000.00.
Community Development Authority of the City of Madison, 215 Martin Luther King Jr Blvd, Ste 318, P.O. Box 1785, Madison, WI 53701–1785, *Amount Awarded:* $31,618.00.
Community Development Corporation of Brownsville, 1150 E. Adams St., Second Floor, Brownsville, TX 78520, *Amount Awarded:* $33,841.00.
Community Development Support Association (CDSA), 2615 E. Randolph, Enid, OK 73701, *Amount Awarded:* $17,540.00.
Community Services League, 300 W. Maple, P.O. Box 4178, Independence, MO 64051, *Amount Awarded:* $25,690.00.
Crawford-Sebastian Community Development Council, Inc., 4831 Armour, P.O. Box 4069, Fort Smith, AR 72914, *Amount Awarded:* $16,876.00.
Crowley's Ridge Development Council, Inc., 249 S. Main, P.O. Box 1497, Jonesboro, AR 72401, *Amount Awarded:* $13,836.00.
Dallas Urban League, 4315 South Lancaster Road, Dallas, TX 75216, *Amount Awarded:* $9,688.00.
District 7 Human Resources Development Council 7 North 31st Street, P.O. Box 2016, Billings, MT 59103 *Amount Awarded:* $16,800.00.
E'TRAD (Education, Training, Research and Development) 608 E. Cherry Street, Suite 101, P.O. Box 10298, Columbia, MO 65201 *Amount Awarded:* $14,874.00.
East Arkansas Legal Services, 2126 E. Broadway, P.O. Box 1149, West Memphis, AR 72303, *Amount Awarded:* $17,540.00.
Family Housing Advisory Services, Inc., 2416 Lake Street, Omaha, NE 68111, *Amount Awarded:* $38,805.00.
Family Life Center/Utah State University, 493 North 700 East, Logan, UT 84321, *Amount Awarded:* $11,391.00.
Family Management Credit Counselors, Inc. (FMCCI), 1409 W. 4th Street, Waterloo, IA 50702, *Amount Awarded:* $10,000.00.
Family Service Agency, 4504 Burrow Drive, P.O. Box 16615, North Little Rock, AR 72231–6615, *Amount Awarded:* $26,951.00.
Greater Kansas City Housing Information Center, 3810 Paseo, Kansas City, MO 65109–2721, *Amount Awarded:* $38,583.00.
Gulf Coast Community Services Association, 5000 Gulf Freeway Building #1, Houston, TX 77023, *Amount Awarded:* $3,760.00.
Hawkeye Area Community Action Program, Inc., 1515 Hawkeye Drive, P.O. Box 490, Hiawatha, IA 52233–0490, *Amount Awarded:* $23,987.00.
High Plains Community Development Corp. Inc., 130 East Second Street, Chadron, NE 69337, *Amount Awarded:* $27,173.00.
Housing and Credit Counseling, Inc., 1195 SW Buchanan, Suite 101, Topeka, KS 66604–1183, *Amount Awarded:* $24,209.00.
Housing Authority of the City of Lawton, OK, 609 Southwest F Avenue, Lawton, OK 73501, *Amount Awarded:* $3,241.00.
Housing Authority of the City of Muskogee 220 North 40th Street, Muskogee, OK 74401, *Amount Awarded:* $30,655.00.
Housing Authority of the City of Stillwater, 807 S. Lowry, Stillwater, OK 74074, *Amount Awarded:* $2,500.00.
Housing Options Provided for the Elderly, 4265 Shaw Avenue, St. Louis, MO 63110, *Amount Awarded:* $10,000.00.
Housing Partners of Tulsa, Inc., P.O. Box 6369, Tulsa, OK 74148, *Amount Awarded:* $32,137.00.
In Affordable Housing, Inc., 1200 John Barrow Rd., Ste 109, Little Rock, AR 72205, *Amount Awarded:* $13,836.00.
Interfaith of Natrona County, Inc., 1514 East #12th Street, #303, Casper, WY 82601, *Amount Awarded:* $10,000.00.
Justine Petersen Housing & Reinvestment Corp., 5031 Northrup, St. Louis, MO 63110, *Amount Awarded:* $24,950.00.
Lafayette Consolidated Government, P.O. Box 4017–C, Lafayette, LA 70502–4017, *Amount Awarded:* $15,837.00
Legal Aid of Central Texas, 2201 Post Road, Suite 104, Austin, TX 78704, *Amount Awarded:* $37,102.00.
Legal Aid Society of Albuquerque, Inc., 121 Tijeras NE, Suite 3100, Albuquerque, NM 87125–5486, *Amount Awarded:* $27,173.00.
Legal Services of Eastern Missouri, Inc., 4232 Forest Park Avenue, St. Louis, MO 63108, *Amount Awarded:* $17,540.00.
Lincoln Action Program, Inc., 210 O Street, Lincoln, NE 68508, *Amount Awarded:* $29,174.00.
Marshall Housing Authority, 1401 Poplar Street, P.O. Box 609, Marshall, TX 75671, *Amount Awarded:* $3,463.00.
Neighbor to Neighbor, Inc., 424 Pine Street, Suite 203, Fort Collins, CO 80524, *Amount Awarded:* $22,505.00.
Norman Housing Authority, 700 N. Berry Rd., Norman, OK 73069, *Amount Awarded:* $20,282.00.
North Louisiana Legal Assistance Corporation, 200 Washington Street, P.O. Box 3325, Monroe, LA 71201, *Amount Awarded:* $26,210.00.
Northeast Denver Housing Center, 1735 Gaylord St., Denver, CO 80206, *Amount Awarded:* $5,242.00.
Northeast Kansas Community Action Program (NEK-CAP, Inc.), Community Services Department, P.O. Box 380, Hiawatha, KS 66434, *Amount Awarded:* $9,168.00.
Northwest Montana Human Resources, Inc., 214 Main, P.O. Box 8300, Kalispell, MT 59904–1300, *Amount Awarded:* $3,241.00.
Oglala Sioux Tribe Partnership for Housing, Inc., P.O. Box 3001, Pine Ridge, SD 57770, *Amount Awarded:* $11,613.00.
Our Casas Resident Council, Inc., 3006 Guadalupe Street, San Antonio, TX 78207, *Amount Awarded:* $3,463.00.
Parish of Jefferson, Community Action Programs (JEFFCAP), 1221 Elmwood Park Blvd., Suite 402, Jefferson, LA 70123, *Amount Awarded:* $19,541.00.
Senior Housing, Inc., 2021 East Hennipin, Minneapolis, MN 55413, *Amount Awarded:* $24,950.00.
Southeastern North Dakota Community Action Agency, 3233 South University Drive, P.O. Box 2683, Fargo, ND 58104, *Amount Awarded:* $14,000.00.
Southern Minnesota Regional Legal Service, 700 Minnesota Building, 46 East Fourth Street, St. Paul, MN 55101, *Amount Awarded:* $19,319.00.
Southwest Community Resources, 295 Girard Street, Durango, CO 81301, *Amount Awarded:* $5,686.00.
St. Martin, Iberia, Lafayette Community Action Agency, Inc., 501 St. John Street, P.O. Box 3343, Lafayette, LA 70502, *Amount Awarded:* $20,802.00.
St. Mary Community Action Committee Assoc., Inc., P.O. Box 271, Franklin, LA 70538, *Amount Awarded:* $5,983.00.
St. Paul Housing Information Office, 25 West Fourth Street, Room 150, St. Paul, MN 55102, *Amount Awarded:* $21,764.00.
St. Paul Urban League, 401 Selby Avenue, St. Paul, MN 55102, *Amount Awarded:* $26,431.00.
Summit Housing Authority, 106 N. Ridge Street, P.O. Box 188, Breckenridge, CO 80424, *Amount Awarded:* $3,241.00.
Tarrant County Housing Partnership, Inc., 603 West Magnolia Ave, Suite 207, Ft. Worth, TX 76104, *Amount Awarded:* $3,241.00.
Universal Housing Development Corp., P.O. Box 846, Russellville, AR 72811, *Amount Awarded:* $24,728.00.
Urban League of Wichita, Inc., 1802 East 13th Street N., Wichita, KS 67214, *Amount Awarded:* $4,501.00.
Walker's Point Development Corp, 914 S. 5th Street, Milwaukee, WI 53204, *Amount Awarded:* $8,947.00.
West Central Missouri Community Action Agency, 106 W. 4th, P.O. Box 125, Appleton City, MO 64724, *Amount Awarded:* $35,620.00.
Women's Opportunity & Resource Development, 127 N. Higgins, Missoula, MT 59802, *Amount Awarded:* $6,426.00.

Philadelphia (HOC)

Affordable Homes of Millville Ecumenical (AHOME), Inc., P.O. Box 241, Millville, NJ 08332, *Amount Awarded:* $17,340.00.

Albany County Rural Housing Alliance, Inc., P.O. Box 407, 24 Martin Road, Voorheesville, NY 12186, *Amount Awarded:* $18,376.00.

Anne Arundel Co. Economic Opportunity Committee, Inc., 251 West Street, Annapolis, Anne Arundel, MD 21401, *Amount Awarded:* $10,779.00.

Arundel Community Development Services, Inc., 2660 Riva Road, Suite 210, Annapolis, MD 21401, *Amount Awarded:* $19,800.00.

Asian Americans for Equality, Inc., 111 Division Street, New York, NY 10002, *Amount Awarded:* $18,721.00.

Bayfront Nato, Inc., 312 Chestnut Street, Erie, PA 16507, *Amount Awarded:* $3,078.00.

Belmont Shelter Corporation, 1195 Main Street, Buffalo, NY 14209–2196, *Amount Awarded:* $19,425.00.

Berks Community Action Program/Budget Counceling Center, Post Office Box 22, Berks County, Reading, PA 19603–0022, *Amount Awarded:* $19,425.00.

Better Housing League of Greater Cinti, 2400 Reading Road, Cincinnati, OH 45202, *Amount Awarded:* $18,376.00.

Better Neighborhoods Incorporated, 986 Albany Street, Schenectady, NY 12307, *Amount Awarded:* $20,500.00.

Bishop Sheen Ecumenical Housing Foundation, Inc., 935 East Avenue, Suite 300, Rochester, NY 14607, *Amount Awarded:* $15,268.00.

Burlington County Community Action Program, 718 Route 130 South, Burlington, NJ 08016, *Amount Awarded:* $14,578.00.

Catholic Charities, Diocese of Metuchen, 540–550 Route 22 East, Brigewater, Somerset, NJ 08807, *Amount Awarded:* $14,923.00.

Center City Neighborhood Development Corporation, 1824 Main Street, Niagara Falls, NY 14305, *Amount Awarded:* $20,500.00.

Chautauqua Opportunities, Inc., 17 West Courtney Street, Dunkirk, NY 14048, *Amount Awarded:* $20,500.00.

Chester Community Improvement Project, 412 Avenue of the States, Chester, PA 19016, *Amount Awarded:* $20,150.00.

Citizen Action of New Jersey, 400 Main Street, Hackensack, NJ 07601, *Amount Awarded:* $19,425.00.

City of Frederick, 100 South Market Street, Frederick County, Frederick, MD 21701, *Amount Awarded:* $8,000.00.

Coastal Enterprises, Inc., 36 Water Street, P.O. Box 268, Wiscasset, ME 04578, *Amount Awarded:* $20,150.00.

Commission on Economic Opportunity, 165 Amber Lane, Wilkes-Barre, PA 18703, *Amount Awarded:* $19,067.00.

Communities Organized to Improve Life: CEDC, 11 South Carrollton Avenue, Baltimore, MD 21223, *Amount Awarded:* $4,909.00.

Community Access Unlimited, Inc., 80 West Grand Street, Elizabeth, NJ 07202, *Amount Awarded:* $8,016.00.

Community Action Commission of Belmont CTY, 410 Fox-Shannon Place, St. Clairsville, OH 43950, *Amount Awarded:* $4,563.00.

Community Action Commission of Fayette County, Inc., 324 East Court Street, Fayette County, OH 43160, *Amount Awarded:* $12,851.00.

Community Action Committee of the Lehigh Valley, Inc., 651 East Broad Street, Bethlehem, PA 18018, *Amount Awarded:* $16,649.00.

Community Action Program Madison County, 3 East Main Street, P.O. Box 249, Morrisville, NY 13408, *Amount Awarded:* $18,721.00.

Community Action Southwest, 315 East Hallam Avenue, Washington, PA 15301, *Amount Awarded:* $17,000.00.

Community Assistance Network, Inc., 7701 Dunmanway, Baltimore, MD 21222, *Amount Awarded:* $18,721.00.

Community Development Corporation of Long Island, 2100 Middle Country Road, Centereach, NY 11720, *Amount Awarded:* $19,067.00.

Community Housing, Inc., 613 Washington Street, Wilmington, DE 19801, *Amount Awarded:* $14,578.00.

Consumer Credit Counseling Service of Greater Washington, 15847 Crabbs Branch Way, Rockville, MD 20855, *Amount Awarded:* $12,506.00.

Cortland Housing Assistance Council, Inc., 159 Main Street, Cortland, NY 13045, *Amount Awarded:* $12,000.00.

County Commissioners of Carroll County, 10 Distillery Drive, Suite 101, Westminster, MD 21157–5194, *Amount Awarded:* $18,721.00.

Credit Counseling Centers, Inc., 111 Westcott Road, South Portland, ME 04106, *Amount Awarded*: $19,800.00.

Cypress Hills Local Development Corp., 625 Jamaica Avenue, Kings County, Brooklyn, NY 11208, *Amount Awarded*: $19,425.00.

Detroit Non-Profit Housing Corporation, 1200 Sixth Street Suite 404, Detroit, MI 48226, *Amount Awarded*: $15,268.00.

Druid Heights Community Development Corporation, 1821 Mc Culloh Street, Baltimore, MD 21217, *Amount Awarded*: $10,434.00.

Fair Housing Contact Service, 333 South Main Street—Suite 300, Akron, OH 44308, *Amount Awarded*: $6,290.00.

Family Service—Upper Ohio Valley, 51 Eleventh Street, Wheeling, WV 26003, *Amount Awarded*: $12,160.00.

Fayette County Community Action Agency, Inc., 137 N. Beeson Avenue, Uniontown, PA 15401, *Amount Awarded*: $15,000.00.

First State Community Action Agency, Inc., 308 North Railroad Avenue, P.O. Box 877, Georgetown, DE 19947, *Amount Awarded*: $15,268.00.

Garfield Jubilee Association, Inc., 5138 Penn Avenue, Pittsburgh, PA 15224, *Amount Awarded*: $15,000.00.

Greater Boston Leagal Services, Inc., 197 Friend Street, Boston, MA 02114, *Amount Awarded*: $20,150.00.

Greater Erie Community Action Committee, 18 West 9th Street, Erie, PA 16501, *Amount Awarded*: $2,500.00.

Hampton Redevelopment & Housing Authority, P.O. Box 280, 22 Lincoln Street, Hampton, VA 23669, *Amount Awarded*: $8,016.00.

Harford County, 15 South Main Street—Suite 106, Harford County, Bel Air, MD 21014, *Amount Awarded*: $15,959.00.

Harlem Park Revitalization Corporation, 1017 Edmondson Avenue, Baltimore, MD 21223, *Amount Awarded*: $12,160.00.

Hispanic American Organization, 136 S. 4th Street, Allentown, PA 18102, *Amount Awarded*: $14,232.00.

Home Partnership, Inc., 1221 B Brass Mill Road, Belcamp, MD 21017, *Amount Awarded*: $11,470.00.

Housing Association of Delaware Valley, 1500 Walnut Street, Suite 601, Philadelphia, PA 19102, *Amount Awarded*: $10,434.00.

Housing Authority of the County of Butler, 114 Woody Drive, Butler, PA 16001, *Amount Awarded*: $16,649.00.

Housing Coalition of Central Jersey, 78 New Street, New Brunswick, NJ 08901, *Amount Awarded*: $14,923.00.

Housing Consortium for Disabled Individuals, 4040 Market Street, Philadelphia, PA 19104, *Amount Awarded*: $16,995.00.

Housing Council Of York, Inc., 116 North George Street, York County, York, PA 17401, *Amount Awarded*: $19,425.00.

Housing Counseling Services, Inc., 2430 Ontario Road N.W., Washington, DC 20009, *Amount Awarded:* $14,232.00.

Housing Initiative Partnership, Inc., 4310 Gallatin Street, 3rd Floor, Hyattsville, MD 20781, *Amount Awarded*: $17,685.00.

Housing Opportunity Made Equal, 2201 West Broad St—Suite 200, Richmond, VA 23220, *Amount Awarded*: $20,500.00.

Housing Partnership for Morris County, Inc., 22 East Blackwell Street, Dover, NJ 07801, *Amount Awarded*: $20,150.00.

Isles Inc., 10 Wood Street, Trenton, NJ 08618, *Amount Awarded*: $16,304.00.

Jamaica Housing Improvement, Inc 161–10 Jamaica Avenue, Suite 601, Jamaica, NY 11432, *Amount Awarded*: $19,067.00.

Jersey Counseling and Housing Development, Inc., 1840 South Broadway, Camden City, NJ 08104, *Amount Awarded*: $8,362.00.

Kanawha Institute for Social Research and Action, 124 Marshall Avenue, Dunbar, WV 25064, *Amount Awarded*: $20,500.00.

Long Island Housing Services, Inc., 3900 Veterans Memorial Highway-Suite 251, Bohemia, NY 11716, *Amount Awarded*: $20,500.00.

Lutheran Housing Corporation, 13944 Euclid Avenue, Suite 208, East Cleveland, OH 44112, *Amount Awarded*: $10,779.00.

Lynchburg Community Action Group, Inc, 926 Commerce Street, Lynchburg, VA 24504, *Amount Awarded*: $16,649.00.

Margert Community Corporation, 1931 Mott Avenue, Room 412, Far Rockaway, NY 11691, *Amount Awarded:* $19,067.00.

Marshall Heights Community Dev., Org, 3939 Benning Road NE, Washington, DC 20019, *Amount Awarded*: $19,067.00.

Maryland Rural Development Corporation, P.O. Box 4848, Annapolis, MD 21403, *Amount Awarded*: $15,613.00.

Metro Interfaith Services, Inc, 21 New Street, Binghamton, NY 13903, *Amount Awarded*: $10,000.00.

Michigan Housing Counselors, Inc., 237 S.B. Gratiot Avenue, Mt. Clemens, MI 48043, *Amount Awarded*: $15,959.00.

Middle East Community Development Corp., 730 North Collington Avenue, Baltimore, MD 21205, *Amount Awarded*: $13,196.00.
Monmouth County Board of Chosen Freeholders, P.O. Box 1255, Freehold, NJ 07728, *Amount Awarded*: $14,578.00.
NCALL Research, Inc., 20 East Division Street, P.O. Box 1092, Dover, DE 19903–1092, *Amount Awarded*: $19,425.00.
Near Northeast Community Improvement Corporation, 1326 Florida Avenue—N.E., Washington, DC 20002, *Amount Awarded*: $17,685.00 .
Neighborhood House, Inc., 1218 B Street, New Castle County, Wilmington, DE 19801, *Amount Awarded*: $14,578.00.
Neighborhood Housing Services of New Britain, Inc, 223 Broad Street, New Britian, CT 06053, *Amount Awarded*: $17,340.00.
Neighborhood Housing Services of NYC, 121 W. 27th Street, 4th Floor, New York, NY 10001, *Amount Awarded*: $19,067.00.
Neighbors Helping Neighbors, Inc., 443 39th Street, Brooklyn, NY 11232, *Amount Awarded*: $19,425.00.
Northfield Community LDC of SI, Inc., 160 Heberton Avenue, Staten Island, NY 10302, *Amount Awarded*: $19,425.00.
Northwest Counseling Service, Inc., 5001 North Broad Street, Philadelphia, PA 19141, *Amount Awarded*: $17,685.00.
Oakland County Michigan, 1200 North Telegraph Road Oakland County, Pontiac, MI 48341–9901, *Amount Awarded*: $13,542.00.
Office of Human Affairs, 6060 Jefferson Avenue, Suite 12C, P.O. Box 37, Newport News, VA 23607, *Amount Awarded*: $11,470.00.
Open Housing Center, Inc., 45 John Street, Suite #308, New York, NY 10038, *Amount Awarded*: $17,340.00.
Opportunities for Chenango, Inc., P.O. Box 470, 44 West Main Street, Norwich, NY 13815–0470, *Amount Awarded*: $11,280.00.
People Incorporated of Southwest Virginia, 1173 West Main Street, Abington, VA 24210,*Amount Awarded*: $10,000.00.
Philadelphia Council for Community Advancement, 100 North 17th Street, Suite 700, Philadelphia, PA 19107, *Amount Awarded*: $19,425.00.
Phoenix Non-Profit Housing Corp., 1640 Porter Street, Detroit, MI 48216, *Amount Awarded*: $5,599.00.
Piedmont Housing Alliance, 515 Park Street, Charlottesville, VA 22902, *Amount Awarded*: $14,578.00.
Plymouth Redevelopment Authority, 11 Lincoln Street, Plymouth, MA 02360, *Amount Awarded*: $20,500.00.
Prince William County, 8033 Ashton Avenue, Suite 105, Manassas, VA 20109, *Amount Awarded*: $18,721.00.
Putnam County Housing Corporation, 11 Seminary Hill Road, Carmel, NY 10512, *Amount Awarded*: $20,500.00.
Quincy Community Action Programs, Inc., 1509 Hancock Street, Norfolk County, Quincy, MA 02169, *Amount Awarded*: $10,500.00.
Rockland Housing Action Coalition, Inc, 747 Chestnut Street, Chestnut Ridge, NY 10977, *Amount Awarded*: $19,425.00.
Rural Sullivan County Housing Opp., Inc, P.O. Box 1497, Monticello, NY 12701, *Amount Awarded*: $15,000.00.
Rural Ulster Preservation Company, Inc., 289 Fair Street, Ulster County, Kingston, NY 12401, *Amount Awarded*: $18,000.00.
Schuylkill Community Action, 225 North Centre Street, Pottsville, PA 17901, *Amount Awarded:* $18,000.00.
Senior Citizens United Community Services of CC, Inc, 146 Black Horse Pike, Mt. Ephraim, NJ 08059, *Amount Awarded:* $15,268.00.
Shore Up!, Inc., 520 Snow Hill Road, P.O. Box 430, Salisbury, MD 21803, *Amount Awarded:* $15,613.00.
Skyline Cap, Inc, P.O. Box 588, Madison, VA 22727, *Amount Awarded:* $8,362.00.
Somerset County Coalition on Affordable Housing, One West Main Street, 2nd Floor, Somerville, NJ 08876, *Amount Awarded:* $18,376.00.
Southern Maryland Tri-County Community Action Committee, Inc, P.O. Box 280, Hughesville, MD 20637, *Amount Awarded:* $11,124.00.
Southside Community Development & Housing Corp., 1624 Hull Street, Richmond, VA 23224, *Amount Awarded:* $10,088.00.
St. Ambrose Housing Aid Center, 321 East 25th Street, Baltimore, MD 21218, *Amount Awarded:* $20,500.00.
St. James Community Development Corporation, 260 Broadway, Suite 300, Newark, NJ 07104, *Amount Awarded:* $10,088.00.
Tabor Community Services Inc, 439 East King St., Lancaster, PA 17602, *Amount Awarded:* $19,425.00.
Telamon Corporation, 4913 Fithzhugh Avenue, Suite 202, Richmond, VA 23230, *Amount Awarded:* $13,887.00.
The Housing Council in the Monroe County Area., 183 East Main Street, Suite 1100, Rochester, NY 14604, *Amount Awarded:* $20,150.00.
The Southeastern Tidewater Opportunity Project, Inc., 2551 Almeda Avenue, Norfolk, VA 23513, *Amount Awarded:* $8,016.00.
The Trehab Center, 10 Public Avenue, P.O. Box 366, Montrose, PA 18801, *Amount Awarded:* $19,425.00.
Total Action Against Poverty (TAP), 145 Campbell Avenue, S.W., Roanoke, VA 24001–2868, *Amount Awarded:* $17,340.00.
Trcil Services, Inc., 900 Rebecca Avenue, Wilkinsburg, PA 15221, *Amount Awarded:* $8,362.00.
Tri-Churches Housing, Inc., 815 Scott Street, Baltimore, MD 21230, *Amount Awarded:* $15,000.00.
Tri-County Community Action Agency, Inc., 110 Cohansey Street, Bridgeton, NJ 08302, *Amount Awarded:* $8,707.00.
United Neighborhood Centers of Lackawanna County, Inc., 410 Olive Street, Scranton, PA 18509, *Amount Awarded:* $14,923.00.
Universal Credit Consulting Services, Inc., 531 Market Street, Zanesville, OH 43701–3610, *Amount Awarded:* $8,016.00.
University Legal Services, 300 I Street, NE, Suite 202, Washington, DC 20002, *Amount Awarded:* $18,376.00.
Urban League of Rhode Island, Inc., 246 Prairie Avenue, Providence County, Providence, RI 02905, *Amount Awarded:* $19,425.00.
Urban League of Union County, Inc., 272 North Broad St., Elizabeth, NJ 07207, *Amount Awarded:* $12,506.00.
Washington County Community Action Council, Inc., 101 Summit Avenue, Hagerstown, MD 21740, *Amount Awarded:* $15,954.00.
Washtenaw Homebuyers Program, 2301 Platt Road, Ann Arbor, MI 48014, *Amount Awarded:* $3,873.00.
Westchester Residential Opportunities, Inc, 470 Mamaroneck Avenue, Suite 410, White Plains, NY 10605, *Amount Awarded:* $20,500.00.
YWCA of New Castle County, 233 King Street, Wilmington, DE 19801, *Amount Awarded:* $19,425.00.

Santa Ana (HOC)

Administration of Resources and Choices, 209 South Tucson Blvd., P.O. Box 86802, Tucson, AZ 85754, *Amount Awarded:* $22,655.00.
CCCS of Alaska, 208 East 4th Avenue, Anchorage, AK 99501, *Amount Awarded:* $46,422.00.
CCCS of Central Valley Inc., 4969 E. McKinley, Suite #107, Fresno, CA 93727, *Amount Awarded:* $41,260.00.
CCCS of East Bay, 333 Hegenberger Rd, Suite 710, Oakland, CA 94621, *Amount Awarded:* $62,965.00.
CCCS of Los Angeles, 500 Citadel Drive, Suite 300, Los Angeles, CA 90040, *Amount Awarded:* $18,004.00.
CCCS of Mid Counties, 2575 Grand Canal Blvd., Suite 100, Stockton, CA 95207, *Amount Awarded:* $19,043.00.
CCCS of Orange County, P.O. Box 11330, 1920 Old Tustin Avenue, Santa Ana, CA 92711–1330, *Amount Awarded:* $55,725.00.
CCCS of San Diego and Imperial Counties, 1550 Hotel Circle N. Suite 110, San Diego, CA 92108–2907, *Amount Awarded:* $20,593.00.
CCCS of South Nevada, 3650 S. Decatur, Suite 30, Las Vegas, NV 89103, *Amount Awarded:* $42,810.00.
Central Oregon Comm Action Agency Network, 2303 SW First Street, Redmond, OR 97756, *Amount Awarded:* $35,000.00.
Chicanos Por La Causa, Inc., 1112 East Buckeye Road, Phoenix, AZ 85034, *Amount Awarded:* $43,849.00.
City of Anaheim Housing Authority, 201 S. Anaheim Blvd., Ste. 203, Anaheim, CA 92805, *Amount Awarded:* $13,864.00.
City of Vacaville, Office of Housing and Redevelopment, 40 Eldridge Avenue, Suite 2, Vacaville, CA 95688, *Amount Awarded:* $39,198.00.
Community Action Agency, 124 New 6th Street, Lewiston, ID 83501, *Amount Awarded:* $19,554.00.
Community Housing & Credit Counseling Center (CHCCC), 1001 Willow St., Chico, CA 95928, *Amount Awarded:* $35,058.00.
Community Housing & Shelter Services, PO Box 881, Modesto, CA 95353, *Amount Awarded:* $33,507.00.
Community Housing Resource Center, 5212 NE St. John Road, Suite B, Vancouver, WA

98668–6248, *Amount Awarded:* $58,826.00.
County of Santa Cruz Housing Authority, 2160 41st Avenue, Capitola, CA 95010–2060, *Amount Awarded:* $16,965.00.
Eden Council for Hope and Opportunity, 770 A Street, Hayward, CA 94541, *Amount Awarded:* $25,500.00.
Fair Housing Council of Orange County, 201 So Broadway, Santa Ana, CA 92701, *Amount Awarded:* $44,872.00.
Family Housing Resources, Inc., 3777 East Broadway, Suite 100, Tucson, AZ 85716, *Amount Awarded:* $25,000.00.
Fremont Public Association, P.O. Box 31151, Seattle, WA 98103, *Amount Awarded:* $50,000.00.
Inland Fair Housing and Mediation Board, 1005 Begonia Avenue, Ontario, CA 91762, *Amount Awarded:* $61,415.00.
Legal Aid Society of Hawaii, 924 Bethel Street, Honolulu, HI 96813, *Amount Awarded:* $11,802.00.
Neighborhood House Association, 5660 Copley Drive, San Diego, CA 92111, *Amount Awarded:* $47,973.00.
Open Door Counseling Social Service, 34420 SW Tualatin Valley Highway, Hillsboro, OR 97123, *Amount Awarded:* $44,872.00.
Pacific Community Services, Inc., 329 Railroad Avenue, Pittsburg, CA 94566, *Amount Awarded:* $67,105.00.
Pierce County Department of Community Services, 8811 South Tacoma, Lakewood, WA 98499, *Amount Awarded:* $30,000.00.
Project Sentinel, 430 Sherman Avenue, Ste 308, Palo Alto, CA 94306, *Amount Awarded:* $41,771.00.
Sacramento Neighborhood Housing Services, Inc., 3453 5th Avenue, Sacramento, CA 95817, *Amount Awarded:* $43,849.00.
San Diego Home Loan Counseling Service, 3180 University Avenue, Ste 430, San Diego, CA 92104, *Amount Awarded:* $44,872.00.
Southeastern Arizona Government Organization, 118 Arizona Street, Bisbee, AZ 85603, *Amount Awarded:* $5,601.00.
Spokane Neighborhood Action Program, 2116 East First Avenue, Spokane, WA 99202, *Amount Awarded:* $64,004.00.
Springboard, Non-Profit Consumer Credit Mgmt., 6370 Magnolia Avenue, Suite 200, Riverside, CA 92506, *Amount Awarded:* $3,539.00.
Umpqua Community Action Network, 2448 West Harvard, Roseburg, OR 97470, *Amount Awarded:* $20,000.00.
Washoe County Department of Senior Services, 1155 East Ninth Street, Reno, NV 89512, *Amount Awarded:* $18,515.00.
Washoe Legal Services, 650 Tahoe Street, Reno, NV 89509, *Amount Awarded:* $34,546.00.
Women's Development Center, 953 E. Sahara Suite #201, Las Vegas, NV 89104, *Amount Awarded:* $34,019.00.

Appendix B

NonCompetitive Awards

Home Equity Conversion (HECM) Counseling

American Association of Retired Persons (AARP), 601 E Street, NW, Washington, DC 20049, *Amount Awarded:* $584,500.

Native American Grants

Navajo Partnership for Housing, Inc., P.O. Box 1370, St. Michaels, AZ 86511, *Amount Awarded:* $20,800.
Native American Housing Services, Inc., 132 E. Broadway, Suite 1, Anadarko, OK 73005, *Amount Awarded:* $20,800.
Nez Perce Tribal Housing Authority, P.O. Box 188, Lapwai, ID 83540, *Amount Awarded:* $20,800.
Sault Tribe Housing Authority, Homeownership Opportunities Program, 2218 Shunk Road, Sault Ste. Marie, MI 49783, *Amount Awarded:* $20,800.
Sicangu Enterprise Center, P.O. Box 205, Sicangu Lakota Nation, Mission, SD 57555, *Amount Awarded:* $20,800.
Neighborhood Reinvestment Corporation, 1325 G Street, NW, Suite 800, Washington, DC 20005, *Amount Awarded:* $25,000.

[FR Doc. 02–1029 Filed 1–15–02; 8:45 am]

BILLING CODE 4210–27–P

DEPARTMENT OF THE INTERIOR

U.S. Geological Survey

Request for Public Comments on Information Collection Submitted to OMB for Review Under the Paperwork Reduction Act

The proposal for the information collection described below has been submitted to the Office of Management and Budget for approval under the provisions of the Paperwork Reduction Act (44 U.S.C. chapter 35). Copies of the proposed collection of information may be obtained by contacting the Bureau's clearance officer at the phone number listed below. OMB has up to 60 days to approve or disapprove the information collection, but may respond after 30 days; therefore comments on the proposal should be made directly to the Desk Officer for the Interior Department, Office of Regulatory Affairs, Office of Management and Budget, Washington, DC 20503; and to the Bureau Clearance Officer, U.S. Geological Survey, 807 National Center, 12201 Sunrise Valley Drive, Reston, Virginia 20192, telephone (703) 648–7313.

As required by OMB regulations at 5 CFR 1320.8(d)(1), the U.S. Geological Survey solicits specific public comments as to:

1. Whether the collection of information is necessary for the proper performance of the functions on the bureaus, including whether the information will have practical utility;

2. The accuracy of the bureau's estimate of the burden of the collection of information, including the validity of the methodology and assumptions used;

3. The quality, utility, and clarity of the information to be collected; and

4. How to minimize the burden of the collection of information on those who are to respond, including the use of appropriate automated, electronic, mechanical, or other forms of information technology.

Title: Visitor knowledge and economic impact at Arapaho, Arrowwood and Sand Lake National Wildlife Refuges.

OMB Approval No.: New collection.

Abstract: The National Wildlife Refuge System Improvement Act of 1997 requires that all refuges will be managed in accordance with an approved Comprehensive Conservation Plan (CCP) which, when implemented, will achieve refuge purposes; help fulfill the Refuge System mission; maintain and, where appropriate, restore the ecological integrity of each refuge and the Refuge System; help achieve the goals of the Wilderness Preservation System; and meet other mandates. An underlying component of these plans is a strong scientific foundation for establishment for refuge objectives, implementation of management actions, and quantitative monitoring of progress towards these objectives. Few studies have been conducted that evaluate public knowledge, perception, or economic value associated with National Wildlife Refuges. Information about the existing community, economic, and public relations status is a precursor to many of the habitat and visitor management decisions. The primary objective of this study is to gain sufficient knowledge about refuge visitors. Our second objective is to develop and test a set of tools that can be used/repeated at other refuges around the country. Understanding public knowledge, perception, and values is a vital component of natural resource management. Improved understanding will guide future management practices.

Bureau Form No.: None.

Frequency: One time.

Description of Respondents: A sample of visitors to Arapaho, Arrowwood, and Sand Lake National Wildlife Refuges.

Estimated Completion Time: 15 minutes per respondent (approximate).

Number of Respondents: 600 (200 per refuge).

Burden Hours: 150 hours (The burden estimates are based on 15 minutes to complete each questionnaire and an 70% return rate.)

For Further Information Contact: Phadrea Ponds (970) 226–9445, *phadrea ponds@usgs.gov.*

Dated: September 24, 2001.

Dennis B. Fenn,

Associate Director for Biology.

[FR Doc. 02–1071 Filed 1–15–02; 8:45 am]

BILLING CODE 4310–Y7–M

DEPARTMENT OF THE INTERIOR

Bureau of Land Management

[OR–912–6320–AA; GP2–0062]

Meeting for the Five Western Oregon BLM Resource Advisory Committee

AGENCY: Bureau of Land Management, Interior.

ACTION: Meeting notice for the five western Oregon Bureau of Land Management (BLM) Resource Advisory Committees under Section 205 of the Secure Rural Schools and Community Self Determination Act of 2000 (Pub. L. 106–393).

SUMMARY: This notice is published in accordance with Section 10(a)(2) of the Federal Advisory Committee Act. Meeting notice is hereby given for the five western Oregon BLM Resource Advisory Committees including the Coos Bay, Eugene, Medford, Roseburg and Salem Districts pursuant to Section 205 of the Secure Rural Schools and Community Self Determination Act of 2000, Public Law 106–393 (the Act). Topics to be discussed by the BLM Resource Advisory Committees include operating procedures, establishing roles and responsibilities, selection of a chairperson, Federal travel regulations, facilitation needs, as well as future meeting dates. Follow-up meetings will address projects to proposed for funding under Title II of the Act.

DATES: The BLM Resource Advisory Committees will meet on the following dates: The Coos Bay Resource Advisory Committee will meet at the BLM Coos Bay District Office, 1300 Airport Lane, North Bend, Oregon 97459, 9 a.m. to 3 p.m., on February 22, 2002 and 9 a.m. to 3 p.m., on March 7, 2002.

The Eugene Resource Advisory Committee will meet at the BLM Eugene District Office, 2890 Chad Drive, Eugene, Oregon 97440, 9 a.m. to 3 p.m., on February 28, 2002 and 9 a.m. to 3 p.m., on March 14, 2002.

The Medford Resource Advisory Committee will meet at the BLM Medford District Office, 3040 Biddle Road, Medford, Oregon 97504, 10 a.m. to 4 p.m., on February 14, 2002 and 10 a.m. to 4 p.m. March 27, 2002.

The Salem Resource Advisory Committee will meet at the BLM Salem District Office, 1717 Fabry Road, Salem, Oregon 97306, 9 a.m. to 3 p.m., on February 1, 2002 and 9 a.m. to 3 p.m., on March 1, 2002

The Roseburg Resource Advisory Committee will meet at the BLM Roseburg District Office, 777 N.W. Garden Valley Boulevard, Roseburg, Oregon 97470, 9 a.m. to 4 p.m., on February 11, 2002 and 9 a.m. to 4 p.m., on February 25, 2002.

SUPPLEMENTARY INFORMATION: Pursuant to the Act, five Resource Advisory Committees have been formed for western Oregon BLM districts that contain Oregon & California (O&C) Grant Lands and Coos Bay Wagon Road lands. The Act establishes a six-year payment schedule to local counties in lieu of funds derived from the harvest of timber on federal lands, which have dropped dramatically over the past 10 years.

The Act creates a new mechanism for local community collaboration with federal land management activities in the selection of projects to be conducted on federal lands or that will benefit resources on federal lands using funds under Title II of the Act. The BLM Resource Advisory Committees consist of 15 local citizens (plus 6 alternates) representing a wide array of interests.

FOR FURTHER INFORMATION CONTACT: Additional information concerning the BLM Resource Advisory Committees may be obtained from Maya Fuller, Public Affairs, Oregon State Office, P.O. Box 2965, Portland, Oregon 97208, (503) 952–6437, or *maya_fuller@or.blm.gov,* or on the Web at *www.or.blm.gov.*

Dated: December 21, 2001.

Chuck Wassinger,

Associate State Director.

[FR Doc. 02–984 Filed 1–15–02; 8:45 am]

BILLING CODE 4310–33–P

DEPARTMENT OF THE INTERIOR

Minerals Management Service

Agency Information Collection Activities: Proposed Collection, Comment Request

AGENCY: Minerals Management Service (MMS), Interior.

ACTION: Notice of a revision of a currently approved information collection (OMB Control Number 1010–0107).

SUMMARY: To comply with the Paperwork Reduction Act (PRA) of 1995, we are inviting comments on a collection of information that we will submit to the Office of Management and Budget (OMB) for review and approval. The information collection request (ICR) is titled ''Designation of Royalty Payment Responsibility.''

DATES: Submit written comments on or before March 18, 2002.

ADDRESSES: Submit written comments to Carol P. Shelby, Regulatory Specialist, Minerals Management Service, Minerals Revenue Management, P.O. Box 25165, MS 320B2, Denver, Colorado 80225. If you use an overnight courier service, our courier address is Building 85, Room A–614, Denver Federal Center, Denver, Colorado 80225.

FOR FURTHER INFORMATION CONTACT: Carol P. Shelby, telephone (303) 231–3151, FAX (303) 231–3385, email *Carol.Shelby@mms.gov.*

SUPPLEMENTARY INFORMATION:

Title: Designation of Royalty Payment Responsibility.

OMB Control Number: 1010–0107.

Bureau Form Number: MMS–4425.

Abstract: The Department of the Interior (DOI) is responsible for matters relevant to mineral resource development on Federal and Indian lands and the Outer Continental Shelf (OCS). The Secretary of the Interior (Secretary) is responsible for managing the production of minerals from Federal and Indian lands and the OCS, collecting royalties from lessees who produce minerals, and distributing the funds collected in accordance with applicable laws. The Secretary also has an Indian trust responsibility to manage Indian lands and seek advice and information from Indian beneficiaries. MMS performs the royalty management functions and assists the Secretary in carrying out DOI's Indian trust responsibility.

The Federal Oil and Gas Royalty Simplification and Fairness Act of 1996 (RSFA), Public Law 104–185, as corrected by Public Law 104–200, established that owners of operating rights or lease record title (referred to as ''lessees'') are responsible for making royalty and related payments on Federal oil and gas leases. It is common, however, for a payor rather than a lessee to make these payments. When a payor makes payments on behalf of a lessee, RSFA requires that the lessee designate the payor as its designee and notify MMS of this arrangement in writing. These RSFA requirements are codifed in 30 CFR 218.52.

MMS designed Form MMS–4425, Designation Form, to contain all the information necessary for lessees to comply with these RSFA requirements. We are proposing a minor revision to Form MMS–4425 to remove the field for revenue source code. This revision is necessary to make Form MMS–4425 compatible with other recently revised

forms such as the Form MMS–2014, Report of Sales and Royalty Remittance. These revisions are the result of a major reengineering of MMS's financial and compliance processes and the procurement of a new computer system.

Submission of the information in this collection is necessary to comply with RSFA requirements to notify MMS in writing when a lessee wishes to designate a designee. Proprietary information that is submitted is protected, and there are no questions of a sensitive nature included in this information collection.

Frequency: On occasion.

Estimated Number and Description of Respondents: 1,600 oil and gas lessees.

Estimated Annual Reporting and Recordkeeping ''Hour'' Burden: 1,200 hours.

Estimated Annual Reporting and Recordkeeping ''Non-hour Cost'' Burden: We have identified no ''non-hour cost'' burdens.

Comments: The PRA (44 U.S.C. 3501, *et seq.*) provides that an agency may not conduct or sponsor, and a person is not required to respond to, a collection of information unless it displays a currently valid OMB control number. Before submitting an ICR to OMB, PRA section 3506(c)(2)(A) requires each agency ''* * * to provide notice * * * and otherwise consult with members of the public and affected agencies concerning each proposed collection of information * * *.'' Agencies must specifically solicit comments to: (a) Evaluate whether the proposed collection of information is necessary for the agency to perform its duties, including whether the information is useful; (b) evaluate the accuracy of the agency's estimate of the burden of the proposed collection of information; (c) enhance the quality, usefulness, and clarity of the information to be collected; and (d) minimize the burden on the respondents, including the use of automated collection techniques or other forms of information technology.

The PRA also requires agencies to estimate the total annual reporting ''non-hour cost'' burden to respondents or recordkeepers resulting from the collection of information. We have not identified non-hour cost burdens for this information collection. If you have costs to generate, maintain, and disclose this information, you should comment and provide your total capital and startup cost components or annual operation, maintenance, and purchase of service components. You should describe the methods you use to estimate major cost factors, including system and technology acquisition, expected useful life of capital equipment, discount rate(s), and the period over which you incur costs. Capital and startup costs include, among other items, computers and software you purchase to prepare for collecting information; monitoring, sampling, testing equipment; and record storage facilities. Generally, your estimates should not include equipment or services purchased: (i) Before October 1, 1995; (ii) to comply with requirements not associated with the information collection; (iii) for reasons other than to provide information or keep records for the Government; or (iv) as part of customary and usual business or private practices.

We will summarize written responses to this notice and address them in our ICR submission for OMB approval, including appropriate adjustments to the estimated burden. We will provide a copy of the ICR to you without charge upon request.

Public Comment Policy. We will also make copies of the comments available for public review, including names and addresses of respondents, during regular business hours at our offices in Lakewood, Colorado. Individual respondents may request that we withhold their home address from the public record, which we will honor to the extent allowable by law. There also may be circumstances in which we would withhold from the rulemaking record a respondent's identity, as allowable by law. If you request that we withhold your name and/or address, state this prominently at the beginning of your comment. However, we will not consider anonymous comments. We will make all submissions from organizations or businesses, and from individuals identifying themselves as representatives or officials of organizations or businesses, available for public inspection in their entirety.

MMS Information Collection Clearance Officer: Jo Ann Lauterbach, (202) 208–7744.

Dated: November 16, 2001.

Lucy Querques Denett,

Associate Director for Minerals Revenue Management.

[FR Doc. 02–1060 Filed 1–15–02; 8:45 am]

BILLING CODE 4310–MR–W

INTERNATIONAL TRADE COMMISSION

[Investigations Nos. 731–TA–986 and 987 (Preliminary)]

Ferrovanadium From China and South Africa

Determinations

On the basis of the record [1] developed in the subject investigations, the United States International Trade Commission determines, pursuant to section 733(a) of the Tariff Act of 1930 (19 U.S.C. 1673b(a)) (the Act), that there is a reasonable indication that an industry in the United States is materially injured by reason of imports from China and South Africa of ferrovanadium, provided for in subheading 7202.92.00 of the Harmonized Tariff Schedule of the United States, that are alleged to be sold in the United States at less than fair value (LTFV).

Commencement of Final Phase Investigations

Pursuant to § 207.18 of the Commission's rules, the Commission also gives notice of the commencement of the final phase of its investigations. The Commission will issue a final phase notice of scheduling, which will be published in the **Federal Register** as provided in § 207.21 of the Commission's rules, upon notice from the Department of Commerce of an affirmative preliminary determination in these investigations under section 733(b) of the Act, or, if the preliminary determinations are negative, upon notice of affirmative final determinations in those investigations under section 735(a) of the Act. Parties that filed entries of appearance in the preliminary phase of the investigations need not enter a separate appearance for the final phase of the investigations. Industrial users, and, if the merchandise under investigation is sold at the retail level, representative consumer organizations have the right to appear as parties in Commission antidumping and countervailing duty investigations. The Secretary will prepare a public service list containing the names and addresses of all persons, or their representatives, who are parties to the investigations.

Background

These investigations are being instituted in response to a petition filed on November 26, 2001, by the Ferroalloys Association Vanadium Committee and its members Bear

[1] The record is defined in § 207.2(f) of the Commission's rules of practice and procedure (19 CFR 207.2(f)).

Metallurgical Co., Butler, PA, Shieldalloy Metallurgical Corp., Cambridge, OH, Gulf Chemical & Metallurgical Corp., Freeport, TX, U.S. Vanadium Corp., Danbury, CT, and CS Metals of Louisiana LLC, Convent, LA.

Notice of the institution of the Commission's investigations and of a public conference to be held in connection therewith was given by posting copies of the notice in the Office of the Secretary, U.S. International Trade Commission, Washington, DC, and by publishing the notice in the **Federal Register** of November 30, 2001 (66 FR 59815). The conference was held in Washington, DC, on December 17, 2001, and all persons who requested the opportunity were permitted to appear in person or by counsel.

The Commission transmitted its determinations in these investigations to the Secretary of Commerce on January 10, 2002. The views of the Commission are contained in USITC Publication 3484 (January 2002), entitled Ferrovanadium from China and South Africa: Investigations Nos. 731–TA–989 and 987 (Preliminary).

Issued: January 10, 2002.

By order of the Commission.

Marilyn R. Abbott,

Acting Secretary.

[FR Doc. 02–1124 Filed 1–15–02; 8:45 am]

BILLING CODE 7020–02–P

INTERNATIONAL TRADE COMMISSION

[Investigation 332–435]

Tools, Dies, and Industrial Molds: Competitive Conditions in the United States and Selected Foreign Markets

AGENCY: United States International Trade Commission.

ACTION: Institution of investigation and scheduling of public hearing.

EFFECTIVE DATE: January 10, 2002.

SUMMARY: Following receipt of a request on December 21, 2001, from the Committee on Ways and Means of the U.S. House of Representatives, the Commission instituted investigation No. 332–435, Tools, Dies, and Industrial Molds: Competitive Conditions in the United States and Selected Foreign Markets, under section 332(g) of the Tariff Act of 1930 (19 U.S.C. 1332(g)).

FOR FURTHER INFORMATION CONTACT: Information specific to this investigation may be obtained from Dennis Fravel, Project Leader (202–205–3404; *fravel@usitc.gov*) or Harry Lenchitz, Deputy Project Leader (202–205–2737; *lenchitz@usitc.gov*), Office of Industries, U.S. International Trade Commission, Washington, DC, 20436. For information on the legal aspects of this investigation, contact William Gearhart of the Office of the General Counsel (202–205–3091; *wgearhart@usitc.gov*). Hearing impaired individuals are advised that information on this matter can be obtained by contacting the TDD terminal on (202) 205–1810.

Background

As requested by the Committee, the Commission will provide information, to the extent possible, for the most recent five-year period regarding the following:

1. A profile of the U.S. tool, die, and industrial mold industries.
2. Changes in marketing and manufacturing processes, and trends in U.S. production, consumption, and trade.
3. A global market overview and assessment of foreign markets and significant foreign industries, including those in China, Taiwan, Japan, Canada, Mexico, and European Union member countries.
4. A comparison of the strengths and weaknesses of U.S. and foreign producers regarding factors of competition such as production costs, labor costs, availability of skilled/experienced labor force, level of technology in the design and manufacturing process, availability of capital, transportation costs, pricing, product quality and after-sales service, and government programs assisting these industries.
5. The principal challenges and potential implications for the industries over the near term. As requested by the Committee, the Commission plans to submit its report to the Committee by October 21, 2002.

Public Hearing

A public hearing in connection with the investigation will be held at the U.S. International Trade Commission Building, 500 E Street SW., Washington, DC, beginning at 9:30 a.m. on May 21, 2002. All persons shall have the right to appear, by counsel or in person, to present information, and to be heard. Requests to appear at the public hearing should be filed with the Secretary, United States International Trade Commission, 500 E Street SW., Washington, DC 20436, no later than 5:15 p.m., May 7, 2002. Any prehearing briefs (original and 14 copies) should be filed not later than 5:15 p.m., May 9, 2002; the deadline for filing post-hearing briefs or statements is 5:15 p.m., May 30, 2002. In the event that, as of the close of business on May 7, 2002, no witnesses are scheduled to appear at the hearing, the hearing will be canceled. Any person interested in attending the hearing as an observer or non-participant may call the Secretary to the Commission (202–205–1806) after May 7, 2002, to determine whether the hearing will be held.

Written Submissions

In lieu of or in addition to participating in the hearing, interested parties are invited to submit written statements (original and 14 copies) concerning the matters to be addressed by the Commission in its report on this investigation. Commercial or financial information that a submitter desires the Commission to treat as confidential must be submitted on separate sheets of paper, each clearly marked ''Confidential Business Information'' at the top. All submissions requesting confidential treatment must conform with the requirements of § 201.6 of the Commission's rules of practice and procedure (19 CFR 201.6). All written submissions, except for confidential business information, will be made available in the Office of the Secretary to the Commission for inspection by interested parties. To be assured of consideration by the Commission, written statements relating to the Commission's report should be submitted to the Commission at the earliest practical date and should be received no later than the close of business on May 30, 2002. All submissions should be addressed to the Secretary, United States International Trade Commission, 500 E Street SW., Washington, DC 20436. The Commission's rules do not authorize filing submissions with the Secretary by facsimile or electronic means.

Persons with mobility impairments who will need special assistance in gaining access to the Commission should contact the Office of the Secretary at 202–205–2000. General information concerning the Commission may also be obtained by accessing its Internet server (*http://www.usitc.gov*).

List of Subjects

Tools, dies, industrial molds, competitiveness, and imports.

Issued: January 11, 2002.

By order of the Commission.

Marilyn R. Abbott,

Acting Secretary.

[FR Doc. 02–1123 Filed 1–15–02; 8:45 am]

BILLING CODE 7020–02–P

DEPARTMENT OF JUSTICE

Provision of Aviation Training to Certain Alien Trainees

AGENCY: Department of Justice.

ACTION: Notice of advance consent for providing aviation training to certain alien trainees.

SUMMARY: Under section 113 of the Aviation and Transportation Security Act (ATSA), training providers subject to regulation by the Federal Aviation Administration (FAA) are prohibited from providing training to aliens in the operation of aircraft with a maximum certificated takeoff weight of 12,500 pounds or more, unless they provide prior notification to the Attorney General. This notice temporarily grants advance consent for the training of certain categories of aliens, without requiring that they provide identifying information to the Attorney General, based on a provisional finding that they do not constitute a risk to aviation or national security at this time.

DATES: This notice is effective January 15, 2002 and remains in effect until further notice.

FOR FURTHER INFORMATION CONTACT: Steven C. McCraw, Director, Foreign Terrorist Tracking Task Force, U.S. Department of Justice, 950 Pennsylvania Avenue, NW, Washington, DC 20530, Telephone (703) 414–9535.

SUPPLEMENTARY INFORMATION: On November 19, 2001, Congress enacted the Aviation and Transportation Security Act (ATSA), Pub. L. 107–71. Upon enactment, section 113 of the ATSA imposed new constrictions on persons subject to regulation under Title 49 subtitle VII part A, United States Code, with respect to providing aviation training to aliens. Persons subject to regulation under Title 49 subtitle VII Part A, United States Code, include individual training providers, certificated carriers, and flight schools (hereinafter collectively referred to as ''training providers''). Pursuant to section 113, training providers must provide the Attorney General with the alien's identification in such form as the Attorney General may require in order to initiate a security risk assessment by the Department of Justice. After notification, the Attorney General then has 45 days to inform the training provider that the alien should not be given the requested training because he or she presents a risk to aviation or national security. If the Attorney General does not indicate that the person is a risk within this 45-day review period, then the training provider may proceed with training. The ATSA, however, permits the Attorney General to interrupt training if he later determines that the alien poses a risk to aviation or national security. The Attorney General has delegated his authority under Section 113 to the Director of the Foreign Terrorist Tracking Task Force.

The Department recognizes that section 113 of the ATSA became immediately effective, and that training providers have been forced to suspend the training of aliens covered by the ATSA pending the implementation of the process for notification to the Attorney General. The Department plans to issue any necessary implementing regulations as soon as possible. However, because the suspension of training imposes a substantial economic burden on regulated training providers, the Department is granting provisional advance consent, effective immediately, for training providers to resume aviation training for certain categories of aliens who appear to pose a risk to aviation and national security which is sufficiently minimal that the Department would not deny them training. In addition, section 113 also permits the Under Secretary of Transportation for Security to specify other individuals for whom the Department should conduct security risk assessments. At this time, however, no other individuals have been specified. The Department plans to publish implementation procedures shortly to provide a means by which training providers may notify the Attorney General with respect to covered individuals seeking aviation instruction who are not eligible for advance consent in order to initiate the Department of Justice's 45-day review period.

Provisional Advance Consent for the Training of Certain Aliens

The Department believes that the primary intent of Congress regarding the enactment of this statute was to prevent potentially dangerous aliens from being taught how to pilot aircraft with a maximum certificated takeoff weight of 12,500 pounds or more. Based on that standard, it appears that certain categories of aliens pose little such risk. For example, currently licensed pilots who seek recurrent training already know how to fly the aircraft for which they wish to maintain proficiency. Denying such retraining would appear to offer no benefit to aviation or national security. Indeed, the purpose behind recurrent training is to make flying safer for the public. The Department has identified several similar classes of aliens who appear not to pose the risk to aviation or national security contemplated by Congress in section 113 of the ATSA. The Department will revisit this provisional advance consent when it promulgates any necessary implementing regulations to determine whether these pilots should continue to be granted advance consent.

Accordingly, effective immediately and until further notice, the Department is granting a provisional advance consent for the training of the following three categories of aliens, based on an initial determination that they do not appear to pose a risk to aviation or national security:

(1) Foreign nationals who are currently employed by U.S. air carriers as pilots on aircraft with a maximum certificated takeoff weight of 12,500 pounds or more;

(2) Foreign nationals employed by foreign air carriers as pilots on aircraft with a maximum certificated takeoff weight of 12,500 pounds or more who are current and qualified as pilot in command, second in command, or flight engineer with respective certificates and ratings recognized by the United States; and

(3) Commercial, corporate, or military pilots of aircraft with a maximum certificated takeoff weight of 12,500 pounds or more who must receive familiarization training on a particular aircraft in order to transport it to the purchaser.

Determination of Status as a U.S. Citizen or National or as an Alien

Section 113 of the ATSA applies to all aliens as defined in section 101(a)(3) of the Immigration and Nationality Act, but does not currently apply to citizens or nationals of the United States. Accordingly, training providers must make a determination as to whether or not a prospective trainee is an alien. If the prospective trainee establishes that he or she is a citizen or national of the United States, the restrictions of section 113 do not apply.

Training providers should require appropriate proof of citizenship or nationality from all trainees who claim to be citizens or nationals of the United States, before commencing aviation training on aircraft with a maximum certificated takeoff weight of 12,500 pounds or more. This requirement is necessary to prevent aliens from falsely claiming to be United States citizens or nationals in order to evade the Department's security risk assessment.

The Department believes that the following documents are sufficient to establish proof of citizenship or nationality:

(1) A valid, unexpired United States passport;

(2) An original birth certificate with raised sea documenting birth in the United States or one of its territories;

(3) An original U.S. naturalization certificate with raised seal, Form N–550 or Form N–570;

(4) An original certification of birth abroad, Form FS–545 or Form DS–1350; or

(5) An original certificate of U.S. citizenship, Form N–560 or Form N–561.

If a training provider has questions about the documents above or any other documentation presented by a person who claims to be a citizen or national of the United States, the training provider may seek further guidance from the Department or the Immigration and Naturalization Service.

Commencement of Aviation Training for Aliens Granted Advance Consent

After a training provider reasonably determines that a prospective alien trainee falls within one of the three advance consent categories, the training provider may proceed with training the alien immediately and does not have to submit any identifying information to the Department. The training provider, however, should retain records to document how the training provider made the determination that the alien was eligible for advance consent. Appropriate measures will be taken by the Department with respect to any alien who is determined to pose a risk to aviation or national security. Available civil and/or criminal penalties will be pursued with respect to any training provider who knowingly or negligently provides training to aliens not covered by this notice.

Dated: January 14, 2002.

Steven C. McCraw,

Director, Foreign Terrorist Tracking Task Force.

[FR Doc. 02–1250 Filed 1–14–02; 2:51 pm]

BILLING CODE 4410–19–M

DEPARTMENT OF JUSTICE

Notice of Lodging of Consent Decree Pursuant to the Comprehensive Environmental Response, Compensation and Liability Act

In accordance with Department of Justice policy codified at 28 CFR 50.7 and Section 122 of the Comprehensive Environmental Response, Compensation and Liability Act of 1980, as amended (''CERCLA''), 42 U.S.C. 9622, notice is hereby given that on January 3, 2002, a proposed consent decree in *United States* v. *American Allied Additives, Inc., et al.*, No. 00–01014, was lodged with the United States District Court for the Northern District of Ohio. The proposed consent decree would resolve the United States' claims against defendant Advanced Chemical Design, Inc. under CERCLA Sections 106 and 107, 42 U.S.C. 9606 and 9607, in connection with the American Allied Additives Superfund Site (''Site'') in Cleveland, Ohio. The proposed consent decree would also resolve Advanced Chemical Design's counterclaim against the United States alleging a taking of private property in violation of the Fifth Amendment to the United States Constitution.

The U.S. Environmental Protection Agency (''EPA'') incurred unreimbursed costs of approximately $148,000 in responding to the release or threatened release of hazardous substances at the Site. Advanced Chemical Design is liable for response costs at the Site as a generator of waste disposed there and is subject to civil penalties as a result of noncompliance with a Unilateral Administrative Order issued by EPA for the performance of an emergency removal at the Site.

Under the proposed consent decree, Advanced Chemical Design agrees to pay a total of $1,000 ($300 for the claim under CERCLA Section 106, and $700 for the claim under CERCLA Section 107) within thirty (30) days of entry of the consent decree. Advanced Chemical Design also agrees to dismiss with prejudice its counterclaim against the United States. In exchange, Advanced Chemical Design will receive a covenant not to sue for Site response costs, and for civil penalties for the violations alleged in the complaint. Advanced Chemical Design will also receive contribution protection for Site response costs.

For a period of thirty (30) days from the date of this publication, the Department of Justice will receive comments related to the proposed consent decree. Comments should be addressed to the Assistant Attorney General, Environment and Natural Resources Division, U.S. Department of Justice, 950 Pennsylvania Avenue, NW., Washington, DC 20530, and should refer to *United States* v. *American Allied Additives, Inc., et al.*, Civil Action No. 00–01014; D.J. Ref. No. 90–11–2–1318.

The consent decree may be examined at the Office of the United States Attorney, 1800 Bank One Center, 600 Superior Avenue, Cleveland, Ohio 44114, and at the U.S. Environmental Protection Agency, Region V, 77 West Jackson Boulevard, Chicago, Illinois 60604. A copy of the consent decree may also be obtained by mail from the Consent Decree Library, P.O. Box 7611, U.S. Department of Justice, Washington, DC 20044. In requesting a copy, please enclose a check in the amount of $5.75 (23 pages at 25 cents per page reproduction cost), and please refer to *United States* v. *American Allied Additives, Inc., et al.*, Civil Action No. 00–01014; D.J. Ref. No. 90–11–2–1318.

William Brighton,

Assistant Chief, Environmental Enforcement Section, Environment and Natural Resources Division.

[FR Doc. 02–1150 Filed 1–15–02; 8:45 am]

BILLING CODE 4410–15–M

DEPARTMENT OF JUSTICE

Notice of Lodging of Consent Decree Under Comprehensive Environmental Response, Compensation and Liability Act

Notice is hereby given that a partial consent decree in *United States* v. *American Scrap Company,* Civil Action No. 1:99–CV–2047, was lodged with the United States District Court for the Middle District of Pennsylvania on October 1, 2001. This notice was previously published in the **Federal Register** on October 15, 2001 and the public was given 30 days to comment. No comments were received. However, because of severe disruption in mail service to the Department of Justice, the United States is unable to conclude with certainty that any comments mailed in response to that notice would have been delivered to the Department of Justice. As a result, the United States is providing this opportunity for any persons who previously submitted comments to resubmit their comments as directed below.

The Partial Consent Decree resolves the United States' claims against Chemung Supply Corporation (''Settling Defendant'') under section 107(a) of the Comprehensive Environmental Response, Compensation and Liability Act (''CERCLA''), 42 U.S.C. 9607(a), for response costs incurred at the Jack's Creek/Sitkin Smelting Superfund Site in Mifflin County, Pennsylvania. The Partial Consent Decree requires the Settling Defendant to pay $210,000.00 in past response costs.

The Department of Justice will receive, for a period of twenty (20) days from the date of this publication, comments relating to the proposed consent decree that were previously submitted during the original comment period. Any persons who previously submitted comments should resubmit those comments by facsimile (at 202–

616–6583) to the Assistant Attorney General for the Environment and Natural Resources Division, Department of Justice, Washington, DC 20530. The comments should refer to *United States* v. *American Scrap Company,* DOJ #90–11–2–911/1.

Alternatively, the comments may be mailed to the Office of the United States Attorney, ATTN: Anne Fiorenza, 228 Walnut Street, Harrisburg, PA 17108.

Copies of the proposed Partial Consent Decree may be examined at the Office of the United States Attorney, Middle District of Pennsylvania, 228 Walnut Street, Harrisburg, PA 17108, and at EPA Region III, 1650 Arch Street, Philadelphia, PA 19103–2029. A copy of the proposed Partial Consent Decree may be obtained by mail from the U.S. Department of Justice, Consent Decree Library, P.O. Box 7611, Washington, DC 20044–7611. When requesting a copy of the proposed Partial Consent Decree, please enclose a check to cover the twenty-five cents per page reproduction costs payable to the ''Consent Decree Library'' in the amount of $6.00, and reference *United States* v. *American Scrap Company,* DOJ # 90–11–2–911/1.

Robert D. Brook,

Assistant Chief, Environmental Enforcement Section, Environment and Natural Resources Division.

[FR Doc. 02–1152 Filed 1–15–02; 8:45 am]

BILLING CODE 4410–15–M

DEPARTMENT OF JUSTICE

Notice of Lodging of Consent Decree Under the Clean Air Act, Clean Water Act, RCRA, CERCLA and EPCRA

Under 28 CFR 50.7, notice is hereby given that on December 28, 2001, a Consent Decree in *United States of America* v. *ATOFINA Chemicals, Inc.*, Civil Action No. 01–7807, was lodged with the United States District Court for the Eastern District of Pennsylvania.

In the Complaint, the United States seeks injunctive relief and civil penalties against ATOFINA Chemicals, Inc. (hereinafter, ''ATOFINA''), pursuant to section 113(b) of the Clean Air Act (''CAA''), 42 U.S.C. 7413(b) (1983), *amended by*, 42 U.S.C. 7413(b) (Supp. 1991), section 309 of the Clean Water Act, 33 U.S.C. 1319, and the Resource Conservation and Recovery Act, (''RCRA''), 42 U.S.C. 6901 *et seq.* for alleged violations at ATOFINA's chemical product manufacturing facilities in Axis, Alabama, Calvert City and Carrollton, Kentucky, Beaumont and Houston, Texas, and Piffard, New York.

Under the settlement, ATOFINA will install pollution control technologies to reduce emissions of volatile organic compounds (''VOCs'') from process units at its Calvert City and Carrollton Kentucky facilities. In addition, ATOFINA will undertake various remedial measures to ensure compliance with the Clean Water Act. The settlement requires ATOFINA to pay a civil penalty of $1.9 million, and perform supplemental environmental projects totaling approximately $300,000.

The Department of Justice will receive comments relating to the Consent Decree for a period of thirty (30) days from the date of this publication. Comments should be addressed to the Assistant Attorney General, Environment and Natural Resources Division, P.O. Box 7611, U.S. Department of Justice, Washington, DC 20044–7611, and should refer to *United States, et al.,* v. *ATOFINA Chemicals, Inc.*, D.J. Ref. 90–7–1–06426.

The Consent Decree may be examined at the Office of the United States Attorney for the Eastern District of Pennsylvania, 615 Chestnut Street, Suite 1250, Philadelphia, PA 19106. A copy of the Consent Decree may also be obtained by mail from the Consent Decree Library, PO Box 7611, U.S. Department of Justice, Washington, DC 20044–7611. In requesting a copy, please enclose a check in the amount of $12.50 (25 cents per page reproduction cost) payable to the Consent Library.

Robert D. Brook,

Assistant Section Chief, Environmental Enforcement Section, Environment and Natural Resources Division.

[FR Doc. 02–1113 Filed 1–15–02; 8:45 am]

BILLING CODE 4410–15–M

DEPARTMENT OF JUSTICE

Notice of Lodging of Consent Decree Pursuant to the Comprehensive Environmental Response, Compensation, and Liability Act

Pursuant to Section 122(d)(2) of the Comprehensive Environental Response, Compensation, and Liability Act (''CERCLA''), 42 U.S.C. 9622(d)(2), and 28 CFR 50.7, notice is hereby given that a proposed consent decree embodying a settlement in *United States* v. *Chevron Environmental Management Co., et al.,* No. CV 01–11162 MMM (JWJx), was lodged on December 28, 2001, with the United States District Court for the Central District of California, Western Division.

In a complaint filed concurrently with the lodging of the consent decree, the United States, the State of California, and the California Hazardous Substance Account, seek injunctive relief for performance of response actions and reimbursement of response costs incurred by the United States Environmental Protection Agency (''EPA'') and by the California Department of Toxic Substances Control (''DTSC''), pursuant to sections 106 and 107 of CERCLA, 42 U.S.C. 96060, 9607, in response to releases of hazardous substances at the Operating Industries, Inc. (''OII'') Superfund site in Monterey Park, California. Under the proposed consent decree, the settling defendants have agreed to pay response costs and fund and perform future response actions at the OII Site.

Overall this consent decree has a combined value of approximately $340 million, contributed by the respective parties in cash, or work commitments and reimbursement of past response costs. The settlement addresses the full implementation of the final remedy at the Site. Under this settlement, Work Defendants will perform the Work required by the consent decree, valued at approximately $297 million ($262 million in work plus $25 million in future oversight costs), which will be funded through Work Defendant contributions, payments by Cash Defendants and escrow accounts established under prior settlements or to be established under this settlement. EPA will receive approximately $10 million to be placed in a Special Account, which is available to pay for Excluded Work. The settlement also includes an agreement by the United States Navy to pay approximately $1 million to resolve the Navy's potential liability at the OII site.

The Department of Justice will receive, for a period of thirty (30) days from the date of this publication, comments relating to the proposed consent decree. Comments should be addressed to the Assistant Attorney General for the Environment and Natural Resources Division, U.S. Department of Justice, Box 7611 Ben Franklin Station, Washington, D.C. 20044–7611, and should refer to *United States* v. *Chevron Environmental Management Co. et al.,* DOJ Ref.#90–11–2–156/4. Commenters may request a public hearing in the affected area, pursuant to Section 7003(d) of RCRA, 42 U.S.C. 6973(d).

The proposed consent decree may be examined at the EPA Region 9 Superfund Records Center, 75 Hawthorne Street, Fourth Floor, San Francisco, California 94015, and at the Office of the United States Attorney for the Central District of California,

Federal Building, Room 7516, 300 North Los Angeles Street, Los Angeles, California 90012. A copy of the proposed consent decree may be also be obtained by mail from the Department of Justice Consent Decree Library, Box 7611, Ben Franklin Station, Washington, DC 20044–7611. In requesting a copy, please refer to the referenced case and enclose a check in the amount of $250.50 (25 cents per page reproduction costs), payable to the Consent Decree Library. A copy of the decree, exclusive of the defendants' signature pages and the attachments, may be obtained for $54.50.

Catherine McCabe,

Deputy Section Chief, Environmental Enforcement Section, Environment and Natural Resources Division.

[FR Doc. 02–1114 Filed 1–15–02; 8:45 am]

BILLING CODE 4410–15–M

DEPARTMENT OF JUSTICE

Notice of Lodging of Consent Decree Pursuant to the Clean Water Act

In accordance with 28 CFR 50.7, the Department of Justice gives notice that a proposed consent decree in *United States* v. *Town of Greenwich*, No. 01–CV–2424 (D. Conn.), was lodged with the United States District Court for the District of Connecticut on December 27, 2001, pertaining to the payment of a civil penalty and injunctive relief, in connection with the Town of Greenwich's (Town) violations of the Clean Water Act (CWA), 33 U.S.C. 1251 *et seq.*, and National Pollution Discharge Elimination System (NPDES) permit, issued to the Town under the CWA.

Under the proposed consent decree, the Town will pay a civil penalty of $285,000, to be shared equally between the United States and the State of Connecticut, a co-plaintiff in the case, and will perform injunctive relief to evaluate and rehabilitate its wastewater collection, storage, and transmission system. The Consent Decree includes a release of claims alleged in the complaint.

The Department of Justice will receive, for a period of thirty (30) days from the date of this publication, comments relating to the proposed consent decree. Comments should be addressed to the Assistant Attorney General, Environment and Natural Resource Division, United States Department of Justice, Washington, DC 20530, and should refer to *United States* v. *Town of Greenwich*, No. 01–CV–2424 (D. Conn.), and DOJ Reference No. 90–5–1–1–06717.

The proposed consent decree may be examined at: (1) the Office of the United States Attorney for the District of Connecticut, 157 Church St., 23rd floor, New Haven, Connecticut 06510, (203) 821–3700; and (2) the United States Environmental Protection Agency (Region 1), One Congress Street, Boston, MA 02114 (contact Karen McGuire in the Office of Regional Counsel). A copy of the proposed consent decree may be obtained by mail from the Consent Decree Library, PO Box 7611, Washington, DC 20044. In requesting a copy, please refer to the referenced case and DOJ Reference Number and enclose a check in the amount of $20.75 (with attachments) or $8.50 (without attachments) (83 pages with attachments or 34 pages without attachments at 25 cents per page reproduction costs), made payable to the Consent Decree Library.

Ronald G. Gluck,

Assistant Chief, Environmental Enforcement Section, Environment and Natural Resources Division.

[FR Doc. 02–1115 Filed 1–15–02; 8:45 am]

BILLING CODE 4410–15–M

DEPARTMENT OF JUSTICE

Notice of Lodging of a Consent Decree Under the Comprehensive Environmental Response, Compensation and Liability Act of 1980, as Amended

Under 42 U.S.C. 9622, notice is hereby given that on December 17, 2001, a proposed Consent Decree in *United States* v. *City of Jacksonville, et al.,* Civil Action No. 3:01cv1424J 21TEM was lodged with the United States District Court for the Middle District of Florida, Jacksonville Division.

In this action, the United States seeks reimbursement of response costs, performance of injunctive relief, and payment of natural resource damages pertaining to the Whitehouse Oil Pits Site in Whitehouse, Florida. The United States alleges that the defendants are liable under section 107(a) of the Comprehensive Environmental Response, Compensation and Liability Act of 1980 (CERCLA), as amended, because they operated the site at the time of a disposal of hazardous substances, or they sent hazardous substances to the site for disposal. The defendants in this action are: City of Jacksonville, Florida, Anchor Glass Container Corp., BP America, Inc., Chevron Environmental Management Co., Chevron USA, Inc., City of Starke, Florida, CSX Transportation, Inc., David J. Joseph Company, Exxon Mobil Corporation, Florida East Coast Railway, Norfolk Southern Railway, Ryder Truck Rental, Inc., USA Petroleum Corporation, Viacom, Inc., Western Auto Supply Company.

In settlement of the claims raised in the Complaint, a group of defendants will perform remedial work at the site. This work generally requires the installation of a vertical barrier to isolate contaminated soil, sludge, and groundwater; installation of a lime ''curtain'' inside the barrier to adjust groundwater pH; a cap over portions of the site; and realignment of McGirts Creek so that it runs farther away from the site. The work is expected to cost approximately $14,067,054, including operation, maintenance, and oversight by the United States Environmental Protection Agency. Other defendants will contribute to the cost of the remedy, as will the United States government and parties who are settling their liability under a separate administrative settlement. The defendants are also paying $77,000 to settle the claim for natural resource damages.

The Department of Justice will receive comments relating to the proposed Consent Decree for a period of thirty (30) days from the date of this publication. As a result of the discovery of anthrax contamination at the District of Columbia mail processing center in mid-October, 2001, the delivery of regular first-class mail sent through the U.S. Postal Service has been disrupted. Consequently, public comments which are addressed to the Department of Justice in Washington, DC and sent by regular, first-class mail through the U.S. Postal Service are not expected to be received in timely manner. Therefore, comments should be addressed to the Assistant Attorney General, Environment and Natural Resources Division, Department of Justice, and sent: (1) c/o Michael Stephenson, U.S. EPA Region 4, Atlanta Federal Center, 61 Forsyth Street, SW., Atlanta, Georgia 30303; and/or (2) by facsimile to (202) 353–0296; and/or (3) by overnight delivery, other than through the U.S. Postal Service, to Chief, Environmental Enforcement Section, 1425 New York Avenue, NW., 13th Floor, Washington, DC 20005. Each communication should refer on its face to *United States* v. *City of Jacksonville, et al.,* DOJ No. 90–11–3–1588. Commenters may request an opportunity for a public meeting in the affected area, in accordance with Section 7003(d) of RCRA, 42 U.S.C. 6973(d).

The proposed Consent Decree may be examined at the office of the United States Attorney for the Middle District

of Florida, 200 West Forsyth Street, Suite 700, Jacksonville, Florida, and at the Region 4 office of the Environmental Protection Agency, 61 Forsyth Street, SW., Atlanta, Georgia. A copy of the proposed Consent Decree may also be obtained by faxing a request to Tonia Fleetwood, Department of Justice Consent Decree Library, fax no. (202) 616–6584; phone confirmation no. (202) 514–1547. There is a charge for the copy (25 cent per page reproduction cost). Upon requesting a copy, please mail a check payable to the ''U.S. Treasury'', in the amount of $55.00 to: Consent Decree Library, U.S. Department of Justice, PO Box 7611, Washington, DC 20044–7611. The check should refer to *United States* v. *City of Jacksonville, et al.,* DOJ No. 90–11–3–1588. In requesting a copy exclusive of exhibits and defendants' signatures, please enclose a check in the amount of $13.75 (25 cents per page reproduction cost) payable to the Consent Decree Library.

Ellen Mahan,

Assistant Chief, Environmental Enforcement Section, Environment and Natural Resources Division.

[FR Doc. 02–1116 Filed 1–15–02; 8:45 am]

BILLING CODE 4410–15–M

DEPARTMENT OF JUSTICE

Republication of Notice of Lodging of Proposed Consent Decree Under the Clean Air Act

Under 28 CFR 50.7 notice is hereby given that on September 27, 2001, a proposed Consent Decree (''Consent Decree'') in *United States of America* v. *Knauf Fiber Glass GmbH*, Civil Cause No.: IP–01–1445–CV–B/S was lodged with the United States District Court for the Southern District of Indiana, Indianapolis Division.

Notice of the lodging of this Amended Consent Decree was first published by the Department of Justice in the **Federal Register** of October 15, 2001 (66 FR 52449–52450). The Department of Justice is republishing the Notice of Lodging because mail delivery problems associated with anthrax mailings to government offices have precluded the Department of Justice's receipt of public comments. To avoid additional delays related to such problems, the Department of Justice is requesting that any comments that were submitted under the original Notice of Lodging be resubmitted, this time to the U.S. Environmental Protection Agency, which will forward the comments to the Department of Justice. In this action the United States sought enforcement of the Clean Air Act and the State Implementation Plan (''Indiana SIP''), duly promulgated by the State of Indiana, for emission violations at the Knauf fiber glass manufacturing facilities located in Shelbyville, Indiana. The proposed Consent Decree resolves claims of the United States concerning Knauf's past violations of the emission standards, as established in the Indiana SIP, and the Clean Air Act, 42 U.S.C. 7413(b), including, *inter alia*, emissions of particulate matter from the Line 205 furnace stack at the Shelbyville facility. Pursuant to the proposed Consent Decree, Knauf Fiber Glass GmbH will, among other requirements, develop and implement a Supplemental Environmental Project (''SEP'') providing for the installation and operation of equipment (approximately one year earlier than would otherwise be required by EPA regulations) that will decrease particulate matter, carbon monoxide, and NO_X emissions. Also, under the proposed Consent Decree, Knauf Fiber Glass GmbH will pay $70,000 in civil penalties for violations of the Indiana SIP and the Clean Air Act.

The Department of Justice will receive for a period of thirty (30) days from the date of this publication comments relating to the proposed Consent Decree. Comments should be addressed to the U.S. Environmental Protection Agency, Region 5, 14th Floor, 77 West Jackson Boulevard, Chicago, Illinois 60604–3590 (Attn: Assistant Regional Counsel Padmavati Klejwa), and should refer to *United States* v. *Knauf Fiber Glass GmbH*, Civil Cause No. IP–01–1445–CV–B/S, D.J. Ref. 90–5–2–1–06368.

The proposed Consent Decree may be examined at the Office of the United States Attorney, 10 West Market Street, Suite 2100, Indianapolis, Indiana 46204–3048 (contact Assistant United States Attorney Thomas Kieper at (317) 229–2400), and at U.S. EPA Region 5, 14th Floor, 77 West Jackson Boulevard, Chicago, Illinois 60604–3590 (contact Assistant Regional Counsel Padmavati Klejwa at (312) 353–8917).

A copy of the proposed Consent Decree may also be obtained by mail from the Consent Decree Library, P.O. Box 7611, U.S. Department of Justice, Washington, DC 20044–7611. In requesting a copy, please enclose a check in the amount of $5.75 ($.25 cents per page reproduction cost) payable to the Consent Decree Library.

William D. Brighton,

Assistant Chief, Environmental Enforcement Section, Environment and Natural Resources Division.

[FR Doc. 02–1153 Filed 1–15–02; 8:45 am]

BILLING CODE 4410–15–M

DEPARTMENT OF JUSTICE

Republication of Notice of Lodging of First Amended Consent Decree Under the Clean Water Act

Under 28 CFR 50.7 notice is hereby given that on September 27, 2001, a proposed First Amended Consent Decree (''Amended Consent Decree'') in *United States of America and State of Indiana* v. *City of New Albany,* Civil No. NA–90–46–C–B/G was lodged with the United States District Court for the Southern District of Indiana, New Albany Division.

Notice of the lodging of the Amended Consent Decree was first published by the Department of Justice in the **Federal Register** of October 15, 2001 (66 FR 52451). The Department of Justice is republishing the Notice of Lodging because mail delivery problems associated with anthrax mailings to government offices have precluded the Department of Justice's receipt of public comments. To avoid additional delays related to such problems, the Department of Justice is requesting that any comments that were submitted under the original Notice of Lodging be resubmitted, this time to the U.S. Environmental Protection Agency, which will forward the comments to the Department of Justice.

In this action, the United States sought enforcement of a Consent Decree entered into in 1993 for Clean Water Act violations at New Albany's wastewater treatment plant. The First Amended Consent Decree resolves claims of the United States concerning New Albany's wastewater treatment facility and sewer collection system for violations of the 1993 Consent Decree and the Clean Water Act, 33 U.S.C. 1251, *et seq.,* including, *inter alia*, bypasses and sanitary sewer overflow events. Pursuant to the Amended Consent Decree, New Albany will, among other requirements, develop and implement a capacity assurance plan to address the bypasses and sanitary sewer overflows at its wastewater treatment plant and in the sewer collection system. Also, under the Amended Consent Decree, New Albany will pay $180,000 in civil penalties for violations of the 1993 Consent Decree.

The United States will receive for a period of thirty (30) days from the date of this publication comments relating to the Amended Consent Decree. Comments should be addressed to the U.S. Environmental Protection Agency, 14th Floor, 77 West Jackson Boulevard, Chicago, Illinois 60604–3590 (Att.: Asst. Regional Counsel Deborah A. Carlson) and should refer to *United States and*

State of Indiana v. *City of New Albany,* Civil Cause No. NA–90–46–C–B/G, D.J. Ref. 90–5–1–1–3448/A.

The Amended Consent Decree may be examined at the Office of the United States Attorney, 10 West Market Street, Suite 2100, Indianapolis, Indiana 46204–3048 (contact Assistant United States Attorney Thomas Kieper at (317) 226–6333), and at U.S. EPA Region 5, 14th Floor, 77 West Jackson Boulevard, Chicago, Illinois 60604–3590 (contact Asst. Regional Counsel Deborah A. Carlson at (312) 353–6121). A copy of the Amended Consent Decree may also be obtained by mail from the Consent Decree Library, P.O. Box 7611, U.S. Department of Justice, Washington, DC 20044–7611. In requesting a copy, please enclose a check in the amount of $15.00 ($.25 cents per page reproduction cost) payable to the Consent Decree Library.

William D. Brighton,

Assistant Chief, Environmental Enforcement Section, Environment and Natural Resources Division.

[FR Doc. 02–1154 Filed 1–15–02; 8:45 am]

BILLING CODE 4410–15–M

DEPARTMENT OF JUSTICE

Notice of Lodging of Consent Decree Under the Comprehensive Environmental Response, Compensation, and Liability Act

In accordance with 42 U.S.C. 9622, notice is hereby given that on January 3, 2002 a proposed consent decree in *United States* v. *Pemaco, Inc. and Lawrence Sze,* Civil No. 00–6199DDDP(CTx), was lodged with the United States District Court for the Central District of California.

This consent decree represents a settlement of claims brought against Lawrence Sze, under section 107 of the Comprehensive Environmental Response, Compensation, and Liability Act, (''CERCLA'') (''the Act''), 42 U.S.C. 9607(a), for recovery of past and future response costs incurred by the United States in connection with the release or threat of release of hazardous substances at the Pemaco Superfund Site located in the City of Maywood, Los Angeles County, California (''the Site''). The Site is located at 5050 Slauson Avenue, in the City of Maywood, Los Angeles County, California, and consists of approximately 4 acres of land adjacent to the Los Angeles River. Lawrence Sze operated the facility from 1986 through 1991. Pemaco, Inc's operation included the purchase of chlorinated solvents, aromatic solvents, flammable liquids, and industrial oils. These chemicals were brought to the facility by rail and tanker truck, where they were repackaged for resale to industrial companies.

The Department of Justice has determined that Mr. Sze has a limited ability to pay and therefore entered into this proposed settlement, whereby Lawrence Sze will pay $50,000 in settlement of the government's claims.

The Department of Justice will receive for a period of thirty (30) days from the date of this publication comments relating to the Consent Decree. Comments should be addressed to the Assistant Attorney General, Environment and Natural Resources Division, care of Angels O'Connell, U.S. Department of Justice, Environment and Natural Resources Division, Environmental Enforcement Section, 301 Howard Street, Suite 1050, San Francisco, CA 94105 and should refer to *United States* v. *Pemaco, Inc. and Lawrence Sze,* DOJ Ref. 90–11–3–06958.

The Consent Decree may be examined at the Office of the United States Attorney for the Central District of California, 312 North Spring Street, G–8 U.S. Courthouse, Los Angeles, California 90012, and at the Region 9 office of the U.S. EPA, 75 Hawthorne Street, San Francisco, California. A copy of the Consent Decree may also be obtained by faxing a request to Tonia Fleetwood, Department of Justice Consent Decree Library, fax number (202) 616–6584; phone confirmation number (202) 514–1547. There is a charge for the copy (25 cent per page reproduction cost). Upon requesting a copy, please mail a check payable to the ''U.S. Treasury'', in the amount of $4.25, to: Consent Decree Library, U.S. Department of Justice, PO Box 7611, Washington, DC 20044–7611. The check should refer to *United States* v. *Pemaco, Inc., and Lawrence Sze,* Civil No. 00–6199–DDDP(CTx), DOJ Ref. 90–11–3–06958.

Ellen M. Mahan,

Assistant Section Chief, Environmental Enforcement Section, Environment and Natural Resources Division.

[FR Doc. 02–1117 Filed 1–15–02; 8:45 am]

BILLING CODE 4410–15–M

DEPARTMENT OF JUSTICE

Notice of Lodging of Consent Decree Under the Comprehensive Environmental Response, Compensation, and Liability Act

Notice is hereby given that on December 12, 2001 a proposed Consent Decree (''Decree'') in *United States et al.* v. *The S.W. Chemical Company, Inc.* Civil Action No. 01–2404, was lodged with the United States District Court for the District of Colorado. The action was filed pursuant to section 107(a)(1) and (4) of the Comprehensive Environmental Response, Compensation, and Liability Act (''CERCLA''), 42 U.S.C. 9607(a)(1) and (4). The action concerns EPA's costs of responding to the release or threatened release of hazardous substances at or from the Denver Radium Superfund Site, Operable Unit VIII, in the City and County of Denver, Colorado, also known as the Shattuck Superfund Site (the ''Site''), and possible damages for injury to or destruction of, or loss of natural resources resulting from the release of hazardous substances from the Site.

Under the terms of the Decree The S.W. Shattuck Chemical Company, Inc. (the ''Defendant''), will: (a) Pay the United States $5.45 million to be deposited into an EPA special account to offset EPA's response costs at the Site; (b) pay $250,000 to the United States Department of the Interior to settle a potential natural resource damages claim; and (c) establish a trust and convey the 5.9 acre parcel which is the subject of the environmental clean-up to the trust for sale and distribution of net sale proceeds to EPA's special account for the Site. The decree also includes proposed settlement terms between the State of Colorado and the Defendant.

The Department of Justice will receive comments relating to the proposed Consent Decree for a period of forty-five (45) days from the date of this publication. As a result of the discovery of anthrax contamination at the District of Columbia mail processing center in mid-October, 2001, the delivery of regular first-class mail sent through the U.S. Postal Service has been disrupted. Consequently, public comments which are addressed to the Department of Justice in Washington, DC and sent by regular, first-class mail through the U.S. Postal Service are not expected to be received in a timely manner. Therefore, comments should be addressed to the Assistant Attorney General, Environment and Natural Resources Division, Department of Justice, and sent to (1) Denver Field Office, 999 18th Street, Suite 945NT, Denver, CO 80202; and/or (2) by facsimile to (202) 353–0296; and/or (3) by overnight delivery, other than through the U.S. Postal Service, to Chief, Environmental Enforcement Section, 1425 New York Avenue NW., 13th Floor, Washington, DC 20005. Each communication should refer to *United States et al.* v. *The S.W. Shattuck Chemical Company, Inc.,* D.J. Ref. 90–11–2–741/1.

The proposed Consent Decree may be examined at the offices of the EPA Superfund Records Center, EPA Region VIII, located at 999 18th Street (check in at Suite 300), Denver, Colorado 80202. A copy of the proposed Consent Decree may also be obtained by faxing a request to Tonia Fleetwood, Department of Justice Consent Decree Library, fax no. (202) 616–6584; telephone confirmation no (202) 514–1547. There is a charge for the copy (25 cents per page reproduction cost). Upon requesting a copy, please mail a check payable to the ''U.S. Treasury'', in the amount of $17.75, to: Consent Decree Library, U.S. Department of Justice, PO Box 7611, Washington, DC 20044–7611. The check should refer to *United States et al.* v. *The S.W. Shattuck Chemical Company, Inc.,* D.J. Ref. 90–11–2–741/1.

Robert Brook,

Assistant Section Chief, Environmental Enforcement Section, Environment and Natural Resources Division.

[FR Doc. 02–1118 Filed 1–15–02; 8:45 am]

BILLING CODE 4410–15–M

DEPARTMENT OF JUSTICE

Notice of Lodging of Settlement Agreement Pursuant to the Comprehensive Environmental Response, Compensation and Liability Act and Chapter 11 of Title 11 of the United States Bankruptcy Code

In accordance with the policy of the Department of Justice, notice is hereby given that on December 10, 2001, a proposed settlement agreement in United States v. American Allied Additives, Inc., et al., Civil Action No. 00–01014, was lodged with the United States District Court for the Northern District of Ohio. The proposed settlement agreement would resolve the United States' claim against defendant Gibson-Homans Company pursuant to section 107 of the Comprehensive Environmental Response, Compensation and Liability Act of 1980, as amended (''CERCLA''), 42 U.S.C. 9607, in connection with the American Allied Additives Superfund Site in Cleveland, Ohio. Under the proposed settlement agreement, the United States' claim would be allowed as a pre-petition general unsecured claim for $24,050 in Gibson-Homans' bankruptcy proceeding, In Re: The Gibson-Homans Company, No. 00–50369 (Bankr. N.D. Ohio), pursuant to Chapter 11 of Title 11 of the United States Code, 11 U.S.C. 101, et seq.

For a period of thirty (30) days from the date of this publication, the Department of Justice will receive comments related to the proposed settlement agreement. Comments should be addressed to the Assistant Attorney General, Environment and Natural Resources Division, U.S. Department of Justice, 950 Pennsylvania Avenue, NW., Washington, DC 20530, and should refer to United States v. American Allied Additives, Inc., et al., Civil Action No. 1:00CV1014; D.J. Ref. No. 90–11–2–1318.

The settlement agreement may be examined at the Office of the United States Attorney, 1800 Bank One Center, 600 Superior Avenue, Cleveland, Ohio 44114, and at the U.S. Environmental Protection Agency, Region V, 77 West Jackson Boulevard, Chicago, Illinois 60604. A copy of the settlement agreement may also be obtained by mail from the Consent Decree Library, P.O. Box 7611, U.S. Department of Justice, Washington, DC 20044. In requesting a copy, please enclose a check in the amount of $2.00 (8 pages at 25 cents per page reproduction cost), and please refer to United States v. American Allied Additives, Inc., et al., Civil Action No. 00–01014; D.J. Ref. No. 90–11–2–1318.

William Brighton,

Assistant Chief, Environmental Enforcement Section, Environment and Natural Resources Division.

[FR Doc. 02–1151 Filed 1–15–02; 8:45 am]

BILLING CODE 4410–15–M

DEPARTMENT OF LABOR

Employment and Training Administration

Proposed Collection; Comment Request

ACTION: Notice.

SUMMARY: The Department of Labor, as part of its continuing effort to reduce paperwork and respondent burden conducts a preclearance consultation program to provide the general public and Federal agencies with an opportunity to comment on proposed and/or continuing collections of information in accordance with the Paperwork Reduction Act of 1995 (PRA95) (44 U.S.C. 3506(c)(2)(A)). This program helps to ensure that requested data can be provided in the desired format, reporting burden (time and financial resources) is minimized, collection instruments are clearly understood, and the impact of collection requirements on respondents can be properly assessed. Currently, the Employment and Training Administration is soliciting comments concerning the proposed new collection of data on the costs and usage of Workforce Investment Act (WIA) and Wagner Peyser services that do not require registration.

A copy of the proposed information collection request (ICR) can be obtained by contacting the office listed below in the **ADDRESSES** section of this notice.

DATES: Written comments must be submitted to the office listed in the addressee's section below on or before March 18, 2002.

ADDRESSES: James Aaron, Chief, Division of Performance and Results, Office of Financial and Administrative Management, Employment and Training Administration, U.S. Department of Labor, 200 Constitution Avenue, NW, Room N–4702, Washington, DC 20210, Telephone: (202) 693–2814 this is not a toll-free number), E-mail: jaaron@doleta.gov.

SUPPLEMENTARY INFORMATION:

1. Background

The Department of Labor seeks to collect data regarding the costs and usage of Workforce Investment Act (WIA) and Wagner Peyser services that do not require participant registration. Current reporting systems do not capture this information because self and informational services do not require registration and are not part of the performance accountability provisions of the respective statutes. This fact has complicated the budget process by limiting DOL's capacity to develop unit cost projections. In addition, DOL does not have complete information on WIA service design. The information that is developed will be used to inform budget decisions and the WIA reauthorization process.

The data will consist of information already collected by state and local workforce development staff for their own management purposes and data collected from a probability sample of persons using self-service facilities. The principal goal of the data collection is to develop a national estimate of the number of job seekers who use informational, self, or staff facilitated services that do not require registration in primary One-Stop programs and related costs.

II. Review Focus

The Department of Labor is particularly interested in comments which:

- Evaluate whether the proposed collection of information is necessary for the proper performance of the functions of the agency, including whether the information will have practical utility;

• Evaluate the accuracy of the agency's estimate of the burden of the proposed collection of information, including the validity of the methodology and assumptions used;

• Enhance the quality, utility, and clarify of the information to be collected; and

• Minimize the burden of the collection of information on those who are to respond, including through the use of appropriate automated, electronic, mechanical, or other technological collection techniques or other forms of information technology, *e.g.*, permitting electronic submissions of responses.

III. Current Actions

DOL is seeking Office of Management and Budget (OMB) approval to collect data on the costs and usage of Workforce Investment Act (WIA) and Wagner Peyser services that do not require registration. The data are necessary to inform budget decisions and for the WIA reauthorization process. The data will consist of information already collected by state and local workforce development staff for their own management purposes and data collected from a probability sample of persons using self-service facilities. The principal goal of the data collection is to develop a national estimate of the number of job seekers who use informational, self, or staff facilitated services that do not require registration in primary One-Stop programs.

Type of Review: New.

Agency: Employment and Training Administration.

Title: Estimation of ETA Non-Registrant Service Usage and Costs.

OMB Number: 1205–ONEW.

Affected Public: Individuals or households; State, Local or Tribal Government.

Total Respondents: 12,554.

Frequency: On occasion.

Total Responses: 12,554.

Average Time per Response: 12.37 hours for state survey; 2 minutes for participant survey.

Estimated Total Burden Hours: 1,085 for state and participant surveys; 2,760 local staff burden for participant survey.

TABLE 1.—RESPONDENT BURDEN FOR STATE AND PARTICIPANT SURVEYS

Data form	Total respondents	Frequency	Total responses	Average time per response	Total burden hours
State survey	54	1	54	12.37	668
Participant survey	12,500	1	12,500	2 minutes	417
Totals	12,554	1	12,554	NA	1,085

TABLE 2.—LOCAL STAFF BURDEN FOR PARTICIPANT SURVEY

Tasks conducted by local staff	Staff hours per sampled office	Staff hours for 120 sampled offices
Orientation and Training	2	240
Data Collection	20	2,400
Maintenance and Delivery of Data Collection Forms	1	120
Total Burden Hours	23	2,760

Total Burden Hours for all surveys: 3,845.

Total Burden Cost (capital/startup): $0.

Total Burden Cost (operating/maintaining): $0.

Comments submitted in response to this comment request will be summarized and/or included in the request for Office of Management and Budget approval of the information collection request; they will also become a matter of public record.

Bryan T. Keilty,

Administrator, Office of Financial and Administrative Management, Employment and Training Administration.

[FR Doc. 02–1111 Filed 1–15–02; 8:45 am]

BILLING CODE 4510–30–M

DEPARTMENT OF LABOR

Employment Standards Administration

Proposed Collection; Comment Request

ACTION: Notice.

SUMMARY: The Department of Labor, as part of its continuing effort to reduce paperwork and respondent burden, conducts a preclearance consultation program to provide the general public and Federal agencies with an opportunity to comment on proposed and/or continuing collections of information in accordance with the Paperwork Reduction Act of 1995 (PRA95) (44 U.S.C. 3506(c)(2)(A)). This program helps to ensure that requested data can be provided in the desired format, reporting burden (time and financial resources) is minimized, collection instruments are clearly understood, and the impact of collection requirements on respondents can be properly assessed. Currently, the Employment Standards Administration is soliciting comments concerning the following information collection: Housing Occupancy Certificate—Migrant and Seasonal Agricultural Worker Protection Act.

DATES: Written comments must be submitted to the office listed in the addressee section below within March 18, 2002.

ADDRESSES: Ms. Patricia A. Forkel, U.S. Department of Labor, 200 Constitution Ave., NW, Room S–3201, Washington, DC 20210, telephone (202) 693–0339 (this is not a toll-free number), fax (202) 693–1451, EMail pforkel@fenix2.dol-esa.gov.

SUPPLEMENTARY INFORMATION:

Background

Section 203(b)(1) of the Migrant and Seasonal Agricultural Worker Protection

Act (MSPA), and § 500.135(b) of Regulations, 29 CFR part 500, provide that any person who owns or controls a facility or real property to be used for housing migrant agricultural workers must obtain and post on site, a certificate of occupancy from the State, local, or Federal agency which conducted the housing safety and health inspection. The WH–520 is a form used to gather information to determine whether or not the facility meets the applicable safety and health standards, and also serves as the certificate of occupancy.

II. Review Focus

The Department of Labor is particularly interested in comments which:

• Evaluate whether the proposed collection of information is necessary for the proper performance of the functions of the agency, including whether the information will have practical utility;

• Evaluate the accuracy of the agency's estimate of the burden of the proposed collection of information, including the validity of the methodology and assumptions used;

• Enhance the quality, utility and clarity of the information to be collected; and

• Minimize the burden of the collection of information on those who are to respond, including through the use of appropriate automated, electronic, mechanical, or other technological collection techniques or other forms of information technology, *e.g.*, permitting electronic submissions of responses.

III. Current Actions

The Department of Labor seeks approval for the extension of this information collection in order to inspect and certify a migrant housing facility as meeting applicable safety and health standards under the law.

Type of Review: Extension.

Agency: Employment Standards Administration.

Title: Housing Occupancy Certificate—Migrant and Seasonal Agricultural Worker Protection Act.

OMB Number: 1215–0158.

Agency Number: WH–520.

Affected Public: Individuals or households; Businesses or other for-profit; Farms.

Frequency: On occasion.

Total Respondents/Responses: 60.

Time per Response 3 minutes (Reporting): 1 minute (Recordkeeping and Posting).

Estimated Total Burden Hours: 4.

Total Burden Cost (capital/startup): $0.

Total Burden Cost (operating/maintenance): $0.

Comments submitted in response to this notice will be summarized and/or included in the request for Office of Management and Budget approval of the information collection request; they will also become a matter of public record.

Dated: January 10, 2002.

Margaret J. Sherrill,

Chief, Branch of Management, Review, and Internal Control, Chief, Division of Financial Management, Office of Management, Administration and Planning, Employment Standards Administration.

[FR Doc. 02–1110 Filed 1–15–02; 8:45 am]

BILLING CODE 4510–27–P

DEPARTMENT OF LABOR

Mine Safety and Health Administration

Proposed Information Collection Request Submitted for Public Comment and Recommendations; Applications for Approval of Sanitary Toilet Facilities

ACTION: Notice.

SUMMARY: The Department of Labor, as part of its continuing effort to reduce paperwork and respondent burden, conducts a preclearance consultation program to provide the general public and Federal agencies with an opportunity to comment on proposed and/or continuing collections of information in accordance with the Paperwork Reduction Act of 1995 (PRA95) [44 U.S.C. 3506(c)(2)(A)]. This program helps to ensure that requested data can be provided in the desired format, reporting burden (time and financial resources) is minimized, collection instruments are clearly understood, and the impact of collection requirements on respondents can be properly assessed.

DATES: Submit comments on or before March 18, 2002.

ADDRESSES: Send comments to David L. Meyer, Director, Office of Administration and Management, 4015 Wilson Boulevard, Room 615, 4015, Arlington, VA 22203–1984. Commenters are encouraged to send their comments on a computer disk, or via Internet E-mail to *Meyer-David@msha.gov*, along with an original printed copy. Mr. Meyer can be reached at (703) 235–1383 (voice), or (703) 235–1563 (facsimile).

FOR FURTHER INFORMATION CONTACT: Charlene N. Barnard, Regulatory Specialist, Records Management Division, U.S. Department of Labor, Mine Safety and Health Administration, Room 725, 4015 Wilson Boulevard, Arlington, VA 22203–1984. Ms. Barnard can be reached at *barnard-charlene@msha.gov* (Internet E-mail), (703) 235–1470 (voice), or (703) 235–1563 (facsimile).

I. Background

The purpose of the collection of this information is to evaluate the sanitary features of manufactured toilets for use at coal mines. Protecting the health of miners is a vital function of the agency. Proper environmental sanitation is necessary to protect coal miners from illnesses that can be transported by human waste and also needed to maintain equalization of working conditions with other occupational groups.

II. Desired Focus of Comments

Currently, the Mine Safety and Health Administration (MSHA) is soliciting comments concerning the proposed reinstatement of the information collection related to the Approval of Sanitary Facilities at Coal Mines. MSHA is particularly interested in comments which:

• Evaluate whether the proposed collection of information is necessary for the proper performance of the functions of the agency, including

• Evaluate the accuracy of the agency's estimate of the burden of the proposed collection of information, including the validity of the methodology and assumptions used;

• Enhance the quality, utility, and clarity of the information to be collected; and

• Minimize the burden of the collection of information on those who are to respond, including through the use of appropriate automated, electronic, mechanical, or other technological collection techniques or other forms of information technology, e.g., permitting electronic submissions of responses.

A copy of the proposed information collection request may be viewed on the Internet by accessing the MSHA Home Page (*http://www.msha.gov*) and selecting ''Statutory and Regulatory Information'' then ''Paperwork Reduction Act submission (*http://www.msha.gov/regspwork.htm*)'', or by contacting the employee listed above in the **FOR FURTHER INFORMATION CONTACT** section of this notice of a hard copy.

III. Current Action

The agency feels that the information is necessary for the continuing evaluation of applications under the standards. No revisions or new proposals are included.

Type of Review: Reinstatement.

Agency: Mine Safety and Health Administration.

Title: Applications for Approval of Sanitary Toilet Facilities.

OMB Number: 1219–0101.

Affected Public: Business or other for profit.

Cite/Reference	Total respondents	Frequency	Total responses	Average time per response	Burden (in hours)
71.500	1	1	1	8	8
75.1712–6	1	1	1	8	8
Totals	2	2	2	16	16

Total Annualized Capital/Startup Costs: $0.

Total Operating and Maintenance Costs: $0.

Comments submitted in response to this notice will be summarized and/or included in the request for Office of Management and Budget approval of the information collection request; they will also become a matter of public record.

David L. Meyer,

Director, Office of Administration and Management.

[FR Doc. 02–1112 Filed 1–15–02; 8:45 am]

BILLING CODE 4510–43–M

NATIONAL AERONAUTICS AND SPACE ADMINISTRATION

[Notice 02–007]

NASA Advisory Council, Minority Business Resource Advisory Committee Meeting

AGENCY: National Aeronautics and Space Administration.

ACTION: Notice of meeting.

SUMMARY: In accordance with the Federal Advisory Committee Act, Public Law 92–463, as amended, the National Aeronautics and Space Administration announce a forthcoming meeting of the NASA Advisory Council, Minority Business Resource Advisory Committee.

DATES: Wednesday, January 30, 2002, 9 a.m. to 4 p.m., and Thursday, January 31, 2002, 9 a.m. to 12 noon.

ADDRESSES: NASA Ames Research Center, Center Directors Conference Room, Moffett Field, CA 94035–1000.

FOR FURTHER INFORMATION CONTACT: Mr. Ralph C. Thomas III, Code K, National Aeronautics and Space Administration, (202) 358–2088.

SUPPLEMENTARY INFORMATION: The meeting will be open to the public up to the seating capacity of the room. The agenda for the meeting is as follows:

- Review of Previous Meeting
- OSDBU Update of Activities
- NAC Meeting Report
- Overview of NASA Ames
- Overview of Small Business Program
- Public Comment
- Panel Discussion and Review
- Committee Panel Reports
- Status of Open Committee Recommendations
- New Business

It is imperative that the meeting be held on these dates to accommodate the scheduling priorities of the key participants. Visitors will be requested to sign a visitor's register.

Sylvia K. Kraemer,

Advisory Committee Management Officer, National Aeronautics and Space Administration.

[FR Doc. 02–1024 Filed 1–15–02; 8:45 am]

BILLING CODE 7510–01–P

NATIONAL AERONAUTICS AND SPACE ADMINISTRATION

[Notice 02–004]

Notice of Prospective Patent License

AGENCY: National Aeronautics and Space Administration.

ACTION: Notice of Prospective Patent License.

SUMMARY: NASA hereby gives notice that Boundary Layer Research Inc., of Everett, Washington has applied for an exclusive license to practice the invention disclosed in US Patent No. 5,738,298, entitled ''Tip Fence for Reduction of Lift-Generated Airframe Noise,'' which is assigned to the United States of America as represented by the Administrator of the National Aeronautics and Space Administration. Written objections to the prospective grant of a license should be sent to Ames Research Center.

DATES: Responses to this notice must be received by March 18, 2002.

FOR FURTHER INFORMATION CONTACT: Robert Padilla, Patent Counsel, NASA Ames Research Center, M/S 202A–3, Moffett Field, CA 94035–1000, (650) 604–5104.

Dated: January 5, 2002.

Robert M. Stephens,

Deputy General Counsel.

[FR Doc. 02–1021 Filed 1–15–02; 8:45 am]

BILLING CODE 7510–01–P

NATIONAL AERONAUTICS AND SPACE ADMINISTRATION

[Notice 02–003]

Notice of Prospective Copyright License

AGENCY: National Aeronautics and Space Administration.

ACTION: Notice of Prospective Patent License.

SUMMARY: NASA hereby gives notice that Maecker and Company, MakerToys Division of Silver Creek, New York, has applied for an exclusive copyright license to ARC–14263, ''Exploring Aeronautics Multimedia CD–ROM,'' which is assigned to the United States of America as represented by the Administrator of the National Aeronautics and Space Administration. Written objections to the prospective grant of a license should be sent to Ames Research Center.

DATES: Responses to this notice must be received by March 18, 2002.

FOR FURTHER INFORMATION CONTACT: Robert Padilla, Patent Counsel, NASA Ames Research Center, Mail Stop 202A–3, Moffett Field, CA 94035–1000, (650) 605–5104.

Dated: January, 4, 2002.

Robert M. Stephens,

Deputy General Counsel.

[FR Doc. 02–1020 Filed 1–15–02; 8:45 am]

BILLING CODE 7510–01–P

NATIONAL AERONAUTICS AND SPACE ADMINISTRATION

[Notice 02–006]

Notice of Prospective Patent License

AGENCY: National Aeronautics and Space Administration.

ACTION: Notice of Prospective Patent License.

SUMMARY: NASA hereby gives notice that Phoenix Systems International, Inc., of Pinebrook, New Jersey, has applied for an exclusive patent license to practice the inventions described and claimed in the following: U.S. Patent No. 6,039,783, ''Process and Equipment for Nitrogen Oxide Waste Conversion to Fertilizer,'' KSC–11884–2, ''Process and Equipment for Nitrogen Oxide Waste Conversion to Fertilizer,'' and KSC–12235–1, ''High Temperature Decomposition of Hydrogen Peroxide,'' which are assigned to the United States of America as represented by the Administrator of the National Aeronautics and Space Administration. Written objections to the prospective grant of a license should be sent to Randy Heald, Patent Counsel, John F. Kennedy Space Center, Kennedy Space Center, FL 32899.

DATES: Responses to this Notice must be received by January 31, 2002.

FOR FURTHER INFORMATION CONTACT: Randall M. Heald, Assistant Chief Counsel/Patent Counsel, John F. Kennedy Space Center, Mail Code: CC–A, Kennedy Space Center, FL 32899, telephone (321) 867–7214.

Dated: January 8, 2002.

Robert M. Stephens,

Deputy General Counsel.

[FR Doc. 02–1023 Filed 1–15–02; 8:45 am]

BILLING CODE 7510–01–P

NATIONAL AERONAUTICS AND SPACE ADMINISTRATION

[Notice 02–005]

Notice of Prospective Patent and Copyright License

AGENCY: National Aeronautics and Space Administration.

ACTION: Notice of Prospective Patent and Copyright License.

SUMMARY: NASA hereby gives notice that Williams Electrical Systems Company of Greensboro, North Carolina has applied for an exclusive patent license for the ''Remote Monitor Alarm System,'' U.S. Patent No. 5,485,142, and an exclusive copyright license for KSC–12314, ''Remote Monitoring and Alarm System,'' both technologies are assigned to the United States of America as represented by the Administrator of the National Aeronautics and Space Administration. Written objections to the prospective grant of a license should be sent to Randall M. Heald, Assistant Chief Counsel/Patent Counsel, and John F. Kennedy Space Center.

DATES: Responses to this Notice must be received by January 31, 2002.

FOR FURTHER INFORMATION CONTACT: Randall M. Heald, Assistant Chief Counsel/Patent Counsel, John F. Kennedy Space Center, Mail Code: CC–A, Kennedy Space Center, FL 32899, telephone (321) 867–7214.

Dated: January 4, 2002.

Robert M. Stephens,

Deputy General Counsel.

[FR Doc. 02–1022 Filed 1–15–02; 8:45 am]

BILLING CODE 7510–01–P

NATIONAL SCIENCE FOUNDATION

Agency Information Collection Activities: Proposed Collection; Comment Request

AGENCY: National Science Foundation.

ACTION: Notice.

SUMMARY: The National Science Foundation (NSF) is announcing plans to request clearance of this collection. In accordance with the requirement of section 3506(c)(2)(A) of the Paperwork Reduction Act of 1995, we are providing opportunity for public comment on this action. After obtaining and considering public comment, NSF will prepare the submission requesting OMB clearance of this collection for no longer than 3 years.

Comments are invited on: (a) Whether the proposed collection of information is necessary for the proper performance of the functions of the Agency, including whether the information shall have practical utility; (b) the accuracy of the Agency's estimate of the burden of the proposed collection of information; (c) ways to enhance the quality, utility, and clarity of the information on respondents, including through the use of automated collection techniques or other forms of information technology; and (d) ways to minimize the burden of the collection of information on respondents, including through the use of automated collection techniques or other forms of information technology.

DATES: Written comments should be received by March 18, 2002 to be assured of consideration. Comments received after that date would be considered to the extent practicable.

ADDRESSES: Written comments regarding the information collection and requests for copies of the proposed information collection request should be addressed to Suzanne Plimpton, Reports Clearance Officer, National Science Foundation, 4201 Wilson Blvd., Rm. 295, Arlington, VA 22230, or by e-mail to *splimpto@nsf.gov.*

FOR FURTHER INFORMATION CONTACT: Suzanne Plimpton on (703) 292–7556 or send email to *splimpto@nsf.gov.* Individuals who use a telecommunications device for the deaf (TDD) may call the Federal Information Relay Service (FIRS) at 1–800–877–8339 between 8 a.m. and 8 p.m., Eastern time, Monday through Friday.

SUPPLEMENTARY INFORMATION:

Title of Collection: The Cross Site Analysis of the Integrative Graduate Education and Research Traineeship (IGERT) Program.

OMB Control No.: 3145–0182.

EXPIRATION DATE OF APPROVAL: May 31, 2002.

Abstract: This document has been prepared to support the clearance of data collection instruments to be used in the evaluation of the Integrative Graduate Education and Research Traineeship (IGERT) Program. This site-based interview component is a part of a mixed method implementation and impact study and is comprised of on-site interviews of PIs, trainees, key faculty, and administrative personnel for all IGERT projects in their third year of funding (approximately 20 sites per year). It complements and verifies data from the previously cleared IGERT Distance Monitoring System (a Web-based survey completed annually by the project Principal Investigators, funded trainees, and non-funded associate students). While the Web-based survey provides prescribed and consistent data across all IGERT sites, site visits allow the collection of site-specific, in-depth information that answers questions raised by the Web-based collection and extends its scope. The two approaches inform and enrich each other to provide the clearest and most complete portrait possible of the evaluated program. Data are needed by NSF for program monitoring and to support program analysis, impact assessment, and evaluation activities.

Expected Respondents: Interview respondents at each IGERT project will include: the Principal Investigator, Co-Principal Investigators, Faculty associated with the project or advisors to trainees, Funded Trainees, Non-Funded Associates, and University Administrators.

Burden on the Public: Burden for respondents varies according to role, from 30 minutes to three hours. A total of 34 hours and 30 minutes interview time is projected for the estimated 44 respondents at each site. Over the average of 20 sites each year, this amounts to 880 respondents and a total

of 690 hours. Burden to the public is limited because all respondents are limited to those associated with IGERT projects in their third year of implementation.

Dated: January 11, 2002.

Suzanne H. Plimpton,

NSF Reports Clearance Officer.

[FR Doc. 02–1145 Filed 1–15–02; 8:45 am]

BILLING CODE 7555–01–M

NATIONAL SCIENCE FOUNDATION

Agency Information Collection Activities: Comment Request

AGENCY: National Science Foundation.

ACTION: Submission for OMB Review; Comment Request.

SUMMARY: The National Science Foundation (NSF) has submitted the following information collection requirement to OMB for review and clearance under the Paperwork Reduction Act of 1995, Pub. L. 104–13. Comments regarding (a) whether the collection of information is necessary for the proper performance of the functions of the agency, including whether the information will have practical utility; (b) the accuracy of the agency's estimate of burden including the validity of the methodology and assumptions used; (c) ways to enhance the quality, utility and clarity of the information to be collected; (d) ways to minimize the burden of the collection of information on those who are to respond, including through the use of appropriate automated, electronic, mechanical, or other technological collection techniques or other forms of information technology should be addressed to: Office of Information and Regulatory Affairs of OMB, Attention: Desk Officer for National Science Foundation 725—17th Street, NW Room 10235, Washington, DC 20503, and to Suzanne H. Plimpton, Reports Clearance Officer, National Science Foundation, 4201 Wilson Boulevard, Suite 295, Arlington, Virginia 22230 or send email to *splimpto@nsf.gov.* Comments regarding these information collections are best assured of having their full effect if received within 30 days of this notification. Copies of the submission(s) may be obtained by calling 703–292–7556.

NSF may not conduct or sponsor a collection of information unless the collection of information displays a currently valid OMB control number and the agency informs potential persons who are to respond to the collection of information that such persons are not required to respond to the collection of information unless it displays a currently valid OMB control number.

SUPPLEMENTARY INFORMATION:

Title: National Science Foundation Proposal Evaluation Process.

OMB Control Number: 3145–0060.

Proposed Project Proposal Evaluation Process

The National Science Foundation (NSF) is an independent Federal agency created by the National Science Foundation Act of 1950, as amended (42 U.S.C. 1861–75). The Act states the purpose of the NSF is ''to promote the progress of science; (and) to advance the national health, prosperity, and welfare'' by supporting research and education in all fields of science and engineering.''

From those first days, NSF has had a unique place in the Federal Government: It is responsible for the overall health of science and engineering across all disciplines. In contrast, other Federal agencies support research focused on specific missions such as health or defense. The Foundation also is committed to ensuring the nation's supply of scientists, engineers, and science and engineering educators.

The Foundation fulfills this responsibility by initiating and supporting merit-selected research and education projects in all the scientific and engineering disciplines. It does this through grants and cooperative agreements to more than 2,000 colleges, universities, K–12 school systems, businesses, informal science organizations and other research institutions throughout the U.S. The Foundation accounts for about one-fourth of Federal support to academic institutions for basic research.

The Foundation relies heavily on the advice and assistance of external advisory committees, ad–hoc proposal reviewers, and to other experts to ensure that the Foundation is able to reach fair and knowledgeable judgments. These scientists and educators come from colleges and universities, nonprofit research and education organizations, industry, and other Government agencies.

In making its decisions on proposals the counsel of these merit reviewers has proven invaluable to the Foundation both in the identification of meritorious projects and in providing sound basis for project restructuring.

Review of proposals may involve large panel sessions, small groups, or use of a mail-review system. Proposals are reviewed carefully by scientists or engineers who are expert in the particular field represented by the proposal. About 50% are reviewed exclusively by panels of reviewers who gather, usually in Arlington, VA, to discuss their advice as well as to deliver it. About 35% are reviewed first by mail reviewers expert in the particular field, then by panels, usually of persons with more diverse expertise, who help the NSF decide among proposals from multiple fields or sub-fields. Finally, about 15% are reviewed exclusively by mail.

Use of the Information

The information collected is used to support grant programs of the Foundation. The information collected on the proposal evaluation forms is used by the Foundation to determine the following criteria when awarding or declining proposals submitted to the Agency: (1) What is the intellectual merit of the proposed activity? (2) What are the broader impacts of the proposed activity?

The information collected on reviewer background questionnaires is used by managers to maintain an automated database of reviewers for the many disciplines represented by the proposals submitted to the Foundation. Information collected on gender, race, ethnicity is used in meeting NSF needs for data to permit response to Congressional and other queries into equity issues. These data are also used in the design, implementation, and monitoring of NSF efforts to increase the participation of various groups in science, engineering, and education.

Confidentiality

When a decision has been made (whether an award or a declination), verbatim copies of reviews, excluding the names of the reviewers, and summaries of review panel deliberations, if any, are provided to the PI. Proposers also may request and obtain any other releasable material in NSF's file on their proposal. Everything in the file except information that directly identifies either reviewers or other pending or declined proposals is usually releasable to the proposer.

While listings of panelists' names are released, the names of individual reviewers, associated with individual proposals, are not released to anyone.

Because the Foundation is committed to monitoring and identifying any real or apparent inequities based on gender, race, ethnicity, or disability of the proposed principal investigator(s)/project director(s) or the co-principal investigator(s)/co-project director(s), the Foundation also collects information regarding race, ethnicity, disability, and

gender. This information is also protected by the Privacy Act.

Burden on the Public

The Foundation estimates that anywhere from one hour to twenty hours may be required to review a proposal. It is estimated that approximately five hours are required to review an average proposal. Each proposal receives an average of 8.5 reviews.

Dated: January 10, 2002.

Suzanne H. Plimpton,

Reports Clearance Officer, National Science Foundation.

[FR Doc. 02–1025 Filed 1–15–02; 8:45 am]

BILLING CODE 7555–01–M

NATIONAL SCIENCE FOUNDATION

Sunshine Act Meeting

AGENCY HOLDING MEETING: National Science Foundation, National Science Board, Executive Committee.

DATE AND TIME: January 24, 2002, 1 p.m.–1:30 p.m., Closed Session; January 24, 2002, 1:30 p.m.–2 p.m., Open Session.

PLACE: The National Science Foundation, 4201 Wilson Boulevard, Room 1295, Arlington, VA 22230.

STATUS: Part of this meeting will be open to the public, part of this meeting will be closed to the public.

MATTERS TO BE CONSIDERED:

Thursday, January 24, 2002

Closed Session (1 p.m. to 1:30 p.m)

—Awards and Agreements

Open Session (1:30 p.m. to 2 p.m.)

—Director's Items
—Chairman's Items
—Program Approval: Math and Science Partnerships

Marta Cehelsky,

Executive Officer.

[FR Doc. 02–1185 Filed 1–11–02; 4:48 pm]

BILLING CODE 7555–01–M

NUCLEAR REGULATORY COMMISSION

[Docket Nos. 50–277 AND 50–278]

Exelon Generation Company, LLC; Notice of Withdrawal of Application for Amendments to Facility Operating Licenses

The U.S. Nuclear Regulatory Commission (the Commission) has granted the request of Exelon Generation Company, LLC (the licensee), to withdraw its February 8, 2001, application for proposed amendments to Facility Operating License Nos. DPR–44 and DPR–56 for the Peach Bottom Atomic Power Station, Units 2 and 3, located in York County, Pennsylvania.

The proposed amendments would have modified the facility and the facility Technical Specifications by replacing the interim corrective actions for thermal-hydraulic power oscillations with an automatic reactor scram from the output of the oscillation power range monitor.

The Commission had previously issued a Notice of Consideration of Issuance of Amendment published in the **Federal Register** on May 30, 2001 (66 FR 29354). However, by letter dated December 13, 2001, the licensee withdrew the proposed change.

For further details with respect to this action, see the application for amendment dated February 8, 2001, and the licensee's letter dated December 13, 2001, which withdrew the application for license amendment. Documents may be examined, and/or copied for a fee, at the NRC's Public Document Room, located at One White Flint North, 11555 Rockville Pike (first floor), Rockville, Maryland. Publicly available records will be accessible electronically from the Agencywide Documents Access and Management Systems (ADAMS) Public Electronic Reading Room on the internet at the NRC Web site, *http://www.nrc.gov.* Persons who do not have access to ADAMS or who encounter problems in accessing the documents located in ADAMS, should contact the NRC Public Document Room (PDR) Reference staff by telephone at 1–800–397–4209, 301–415–4737 or by email to pdr@nrc.gov.

Dated at Rockville, Maryland, this 10th day of January 2002.

For the Nuclear Regulatory Commission.

John P. Boska,

Project Manager, Project Directorate, Division of Licensing Project Management, Office of Nuclear Reactor Regulation.

[FR Doc. 02–1088 Filed 1–15–02; 8:45 am]

BILLING CODE 7590–01–P

NUCLEAR REGULATORY COMMISSION

Notice of Finding of No Significant Impact

SUMMARY: Notice is hereby given that the Nuclear Regulatory Commission has made a Finding of No Significant Impact (FONSI) with respect to the potential environmental impact related to the request by Alaron Corporation to utilize a wet waste processing system to dry high-solids wet wastes and aqueous liquid wastes in their Wampum, Pennsylvania facility.

FOR FURTHER INFORMATION CONTACT: John R. McGrath, Senior Health Physicist, Division of Nuclear Materials Safety, U.S. Nuclear Regulatory Commission, Region I, 475 Allendale Road, King of Prussia, Pennsylvania 19406. Telephone 610–337–5069.

SUPPLEMENTARY INFORMATION: The Alaron Corporation of Wampum, Pennsylvania holds a license issued by the U.S. Nuclear Regulatory Commission (NRC) for performing decontamination of equipment contaminated with radioactive material. Alaron has requested authority to add a system for the treatment of wet wastes by installing a system which includes a concentrate dryer, ultra-filtration, reverse-osmosis, demineralizers and steam generator on its site in Wampum.

Alaron estimates that approximately 214 curies of radioactive materials would be processed per year. Environmental radiation safety concerns include exposure due to airborne releases. To evaluate airborne releases, the licensee utilized a computer code (COMPLY, an EPA computer code for calculating the dose to individuals due to airborne releases) to assess dose from radionuclide emissions. The code assumed that an activity of 740 millicuries would be released in effluents to the air and projected a effective dose equivalent of 0.03 millirem/year to an individual at the nearest site boundary.

NRC has reviewed the assumptions used in the above described codes and concurs with the reported results. The maximum annual dose of 0.03 millirem is well below the regulatory limit of 100 millirem per year.

Copies of the EA and FONSI as well as supporting documentation are available for review at the NRC offices located at 475 Allendale Road, King of Prussia, Pennsylvania 19406, telephone number (610) 337–5000, during normal business hours.

John D. Kinneman,

Chief, Nuclear Materials Safety Branch 2, Division of Nuclear Material Safety, U.S. Nuclear Regulatory Commission, Region I.

Environmental Assessment of Proposal by Alaron Corporation To Perform Processing of Wet Wastes Utilizing a Multi-Methodology Treatment System

1. The Need for the Proposed Action

The Alaron Corporation of Wampum, Pennsylvania holds a license issued by the U.S. Nuclear Regulatory Commission (NRC) for performing

decontamination of equipment contaminated with radioactive material. Alaron uses a variety of techniques to perform the decontamination. In a letter dated May 31, 2001, Alaron requested an amendment to their license to authorize a wet waste processing system to dry high-solids wet wastes and aqueous liquid wastes in their Wampum facility. The system will be supplied by NUKEM Nuclear Technologies and includes a concentrate dryer, ultra-filtration units, reverse-osmosis units, demineralizers, steam generator and holding tanks. The purpose of this Environmental Assessment is to determine whether or not the proposed action could contribute to significant impacts on the human environment.

2. Alternatives to the Proposed Action

The only credible alternative is to not allow Alaron to install and use the treatment system. Relocation of the unit to another part of the site would not alter the environmental impact of the operation of the unit. To allow the use of some components of the system and not others could actually result in an increase in the amount of activity released to the environment.

3. The Environmental Impacts of the Proposed Action

Alaron is located on a 24 acre site in the Point Industrial Park, Wampum, Pennsylvania. Building F1 is a 67,800 ft^2 steel frame and steel wall building with a flat synthetic membrane type roof. The proposed wet waste processing system would be located inside a curbed area at the east end of the F1 Annex. The F1 Annex is located on the east side of the F1 Building and is a steel frame, steel walled building 32 feet wide and 88 feet long. The curbed area in the F1 Annex is capable of holding all of the contaminated liquid in the wet waste system. The NUKEM system consists of a number of water treatment components, including a concentrate dryer (CD), an ultra-filtration (UF) unit, a reverse osmosis (RO) unit, two demineralizers, and a steam generator. Wet waste will arrive by truck and will be transferred to one of two 1400 gallon sludge tanks inside the curbed area of the F1 Annex using a pneumatic pump through a double containment transfer hose.

Alaron's License No. 37–20826–01 was last renewed in its entirety on December 3, 1998. As part of that renewal, NRC issued an Environmental Assessment (NUREG/CR–5549) and published a Finding of No Significant Impact in the **Federal Register** on December 2, 1998. The Environmental Assessment found that no atmospheric emissions containing radioactive contaminants were expected to be released from the operation as then licensed. This was based on the fact that potentially contaminated air within work areas is cycled through HEPA filters and exhausted back into the building. Alaron recognized, though, that fugitive emissions, through doors, vents, etc. exist and a conservative estimate of an annual dose to the nearest residence was calculated to be 0.26 millirem. 10 CFR 20.1301 requires that each licensee conduct operations so that the total effective dose equivalent to individual members of the public from the licensed operation does not exceed 0.1 rem (100 millirem) in a year.

The installation of this waste treatment system would add an airborne release point at the Alaron facility. Steam from the steam generator will be vented through an exhaust stack on the roof of the F1 Building. Most of the radioactivity in the wet waste to be processed will be removed by the various treatment methods in the system and will be disposed of as solid waste. After being cleaned by passing through the system, the cleaned or polished water feeds the steam generator. Steam from the steam generator is exhausted through the stack.

Alaron estimates that the wet waste processing system will process liquid, sludge and/or resin waste whose isotopic distribution is typical of waste currently being disposed from nuclear power facilities. Based on the estimated waste throughput, approximately 214 curies of radioactive material will be processed per year. Assuming that all of the H–3 activity will become airborne, that the polished water feed to the steam generator contains other isotopes at 10 CFR Part 20 effluent limits, and that all of the radioactivity in the feed is released, the total activity emitted per year would be about 740 millicuries. The licensee performed dose calculations using the computer code COMPLY (an EPA computer code for calculating the dose to individuals due to airborne releases) which projects an effective dose equivalent of 0.03 millirem/year to an individual at the nearest site boundary as a result of the estimated release. NRC has performed a dose assessment of the proposal and agrees with the basic assumptions and results of the licensee's analysis.

With regard to direct radiation exposure, the licensee plans to conduct cleaning and back flush evolutions that will assure that accumulation of radioactive material on filter media will not result in high radiation levels around the unit. In addition, there will be shielding in place to avoid creation of high radiation levels. The maximum radiation levels is expected to be 50 millirem per hour one foot from the Concentrate Dryer, *i.e.* within the restricted area. Radiation levels at the closest unrestricted area, including the contribution from existing operations, will be about 10 microrem per hour.

4. Conclusion

In view of the fact that the additional dose of 0.03 millirem/year to an individual at the nearest site boundary as a result of the proposed amendment is a small fraction of the dose attributed to fugitive emissions to an individual at the nearest residence as a result of existing operations, the staff concludes that the proposed action will have a negligible impact on the environment.

[FR Doc. 02–1090 Filed 1–15–02; 8:45 am]
BILLING CODE 7590–01–P

NUCLEAR REGULATORY COMMISSION

[Docket No. 70–27]

Environmental Assessment and Finding of No Significant Impact of License Amendment for BWX Technologies, Inc., and Notice of Opportunity To Request a Hearing

AGENCY: Nuclear Regulatory Commission.

ACTION: Amendment of BWX Technologies, Inc., Materials License SNM–42 to authorize the installation and use of the Metal Dissolution Facility.

The U.S. Nuclear Regulatory Commission is considering the amendment of Special Nuclear Material License SNM–42 to authorize the installation and use of the Metal Dissolution Facility at the BWX Technologies, Inc., facility located in Lynchburg, VA, and has prepared an Environmental Assessment in support of this action.

Environmental Assessment

1.0 Introduction

1.1 Background

The Nuclear Regulatory Commission (NRC) staff has received a license request, dated August 7, 2001, and a revision to that submittal dated December 18, 2001. The request is to amend SNM–42 to authorize the installation and use of the Metal Dissolution Facility (MDF) for the dissolution of high enriched uranium (HEU) metal to support BWXT's downblending operations. The purpose of this document is to assess the

environmental consequences of the proposed license amendment.

The BWXT facility in Lynchburg, VA, is authorized under SNM–42 to possess nuclear materials for the fabrication and assembly of nuclear fuel components. The facility supports the U.S. naval reactor program, fabricates research and university reactor components, and manufactures compact reactor fuel elements. The facility also performs recovery of scrap uranium. Research and development activities related to the fabrication of nuclear fuel components are also conducted.

1.2 Review Scope

This environmental assessment (EA) serves to present information and analysis for determining whether to issue a Finding of No Significant Impact (FONSI) or to prepare an Environmental Impact Statement (EIS). Should the NRC issue a FONSI, no EIS would be prepared and the license amendment would be granted.

1.3 Proposed Action

The proposed action is to amend NRC Materials License SNM–42 to authorize the installation and use of the MDF for the dissolution of HEU metal to support BWXT's downblending operations. The MDF will be used to receive, store, dissolve HEU metal ranging from 20 to 97 percent uranium-235 (U–235). The MDF will support other processing areas and will be located within the Bay 15A Material Access Area (MAA). The building is already in place, so there will be no new construction on the BWXT site. The building is approximately 37 feet long, 20 feet wide, and 18 feet high.

The purpose of the MDF is to produce a homogeneous uranyl nitrate solution with a uranium concentration of approximately 400 grams/liter (g/l). The first step in the MDF is the weighing out of an appropriate amount of HEU in a charging basket in a ventilated glove box. The charging basket is then transferred via a lift to a dissolver digester. Measured quantities of nitric acid and deionized water are added in the dissolver to dissolve the HEU. The resulting mixture is then heated to approximately 180 degrees Fahrenheit and circulated until a homogeneous uranyl nitrate solution is made. This homogeneous uranyl nitrate solution is then pumped through filters into a process monitoring column where the solution is circulated, weighed, and sampled for U–235 concentration. The solution is then transferred via a manually activated pump to one of five storage columns where it is retained until required for blending with depleted or low enriched uranium.

1.4 Purpose and Need for Proposed Action

The proposed action would allow the licensee to install and operate the MDF. The operation of the MDF is needed to downblend HEU in support of HEU disposition for the Department of Energy. The MDF is expected to operate for many years.

1.5 Alternatives

The alternatives available to the NRC are:

1. Approve the license amendment request as submitted;
2. Approve the license amendment with restrictions; or
3. Deny the amendment request.

2.0 Affected Environment

The affected environment for Alternatives 1 and 2 is the BWXT site. A full description of the site and its characteristics is given in the 1995 Environmental Assessment (EA) for the Renewal of the NRC license for BWXT. The BWXT facility is located on a 525 acre (2 km^2) site in the northeastern corner of Campbell County, approximately 5 miles (8 km) east of Lynchburg, Virginia. This site is located in a generally rural area, consisting primarily of rolling hills with gentle slopes, farm land, and woodlands.

3.0 Effluent Releases and Monitoring

A full description of the effluent monitoring program at the site is provided in the 1995 Environmental Assessment for the Renewal of the NRC license for BWXT. Monitoring programs at the BWXT facility comprise effluent monitoring of air and water and environmental monitoring of various media (air, soil, vegetation, and groundwater). This program provides a basis for evaluation of public health and safety impacts, for establishing compliance with environmental regulations, and for development of mitigation measures if necessary. The monitoring program is not expected to change as a result of the proposed action. The NRC has reviewed the location of the environmental monitoring program sampling points, the frequency of sample collection, and the trends of the sampling program results in conjunction with the environmental pathway and exposure analysis and concluded that the monitoring program provides adequate protection of public health and safety.

Gaseous, liquid, and solid wastes are produced at the BWXT site. These wastes are categorized as low-level radioactive, nonradioactive, hazardous, or mixed wastes. A description of each of these waste categories, control strategies, and an estimate of release quantities is provided in the 1995 Environmental Assessment for the Renewal of the NRC license for BWXT.

The amendment request is expected to have no impact on the liquid and solid wastes released from the site. Routine liquid radiological and chemical releases from the MDF are not planned.

A new exhaust scrubber will be used to maintain airborne releases from the MDF within NRC limits. The dissolvers will be vented to a scrubber that will provide removal of uranium and NO_X from the exhaust gases using a two-stage oxidation/absorption system. Local warning indicators and controls will be provided in the U-Metal Dissolution area for monitoring and control of the scrubber operation. BWXT has conservatively estimated that the offsite exposure from operation of the new exhaust scrubber will be less than 0.005 millirem per year. The NRC staff has reviewed the exposure estimate and has determined that it is acceptable.

4.0 Environmental Impacts of Proposed Action and Alternatives

4.1 Occupational and Public Health

Use of the MDF will not include any change in the type or form of special nuclear material (SNM) or any new or different operations from those currently authorized under BWXT's license. However, the amounts of HEU metal that will be processed will be higher but within BWXT's license limits. A new exhaust scrubber will be used to maintain airborne releases within NRC limits. The impacts of normal operation of the site were evaluated in 1995 Environmental Assessment (EA) for the Renewal of the NRC license for BWXT. The total effective dose equivalent (TEDE) for members of the public from the normal operations at the BWXT site was calculated to be 0.024 mrem per year. BWXT has conservatively estimated that the offsite exposure from operation of the new exhaust scrubber will be less than 0.005 millirem per year. The increase in offsite exposure due to operation of the MDF is considered insignificant because the new predicted TEDE (0.029 mrem/yr) remains well below the 10 CFR 20 limit of 100 mrem for a member of the public.

Three employees will be working in the MDF. BWXT has conservatively estimated that the three employees will increase the sites cumulative exposure by about 6.0 person-rem based on the

highest individual exposure in 2000 of 2.0 person-rem. Comparing this to the sites 2000 cumulative exposure of 204.9 person-rem, results in an insignificant increase of only 2.9 percent.

4.2 Water Resources and Biota

No liquid process effluents will be released by operation of the facility and there will be no withdrawals from waterways to operate this process. Thus there will be no impacts to water resources (including groundwater) or biota from the operation of the MDF, under normal conditions.

4.3 Geology and Seismology

The operation of the MDF will have no impact on geology or seismology. The process will be performed in an existing facility on the site, therefore there will be no new construction as part of this amendment application. For example, no deep well injection of wastewater would occur that could modify seismic activity or alter geology.

4.4 Soils

Soils will not be impacted as a result of the operation of the MDF. There will be no physical disturbance of soils, and there will not be any releases of process materials to soils as a result of normal operations.

4.5 Air Quality

The NRC staff has determined that the proposed amendment will have minimal impact on air quality. As discussed above, a scrubber system will be used to maintain radiological airborne releases within NRC limits. The scrubber system will also be permitted by the State of Virginia to control non-radiological releases.

4.6 Demography, Cultural and Historic Resources

The NRC staff has determined that the proposed amendment will not impact demography, or cultural or historic resources. A full description of these parameters is given in the 1995 Environmental Assessment for Renewal.

4.7 Impacts Due to Accident Conditions

In accordance with 10 CFR 70.61, BWXT is required to limit the risk of each credible high or intermediate consequence event through the application of engineered and/or administrative controls. Also nuclear criticality events must be limited through assurance that all processes are maintained at subcritical levels. The analyses for these events were provided by BWXT in the amendment request submittals dated August 7, and December 18, 2001.

The impacts due to accident conditions will be evaluated and discussed in the Safety Evaluation Report which will be prepared by the NRC in conjunction with this document. Therefore, impacts due to accident conditions were not evaluated in this document.

4.8 Alternatives

The action that the NRC is considering is approval of an amendment request to Materials license SNM–42 issued pursuant to 10 CFR Part 70. The proposed action is to amend NRC Materials License SNM–42 to authorize the use of the MDF. The alternatives available to the NRC are:

1. Approve the license amendment request as submitted;
2. Approve the license amendment request with restrictions; or
3. Deny the amendment request.

Based on its review, the NRC staff has concluded that the environmental impacts associated with the proposed action are insignificant. Thus, the staff considers that Alternative 1 is the appropriate alternative for selection.

5.0 Agencies and Persons Contacted

The NRC contacted the Director of Radiological Health at the Virginia Department of Health (VDH) January 2, 2002 concerning this request. The Director reviewed the draft document and concluded that the Environmental Assessment does not contain any issues that may be objectionable to VDH.

Because the proposed action is entirely within existing facilities, the NRC has concluded that there is no potential to affect endangered species or historic resources, and therefore consultation with the State Historic Preservation Society and the U.S. Fish and Wildlife Service was not necessary.

6.0 References

U.S. Nuclear Regulatory Commission (NRC), August 1995, ''Environmental Assessment for Renewal of Special Nuclear Material License SNM–42.''

BWX Technologies, August 7, 2001, Letter from Arne Olson to Director of Office of Nuclear Materials Safety and Safeguards, Amendment of License SNM–42.

7.0 Conclusions

Based on an evaluation of the environmental impacts of the amendment request, the NRC has determined that the proper action is to issue a FONSI in the **Federal Register**. The NRC staff considered the environmental consequences of amending NRC Materials License SNM–42 to authorize the operation of the MDF and have determined that the approval of the request will have no significant effect on public health and safety or the environment.

Finding of No Significant Impact

The Commission has prepared the above Environmental Assessment related to the amendment of Special Nuclear Material License SNM–42. On the basis of the assessment, the Commission has concluded that environmental impacts associated with the proposed action would not be significant and do not warrant the preparation of an Environmental Impact Statement. Accordingly, it has been determined that a Finding of No Significant Impact is appropriate.

In accordance with 10 CFR 2.790 of the NRC's ''Rules of Practice,'' the Environmental Assessment and the documents related to this proposed action will be available electronically for public inspection from the Publicly Available Records (PARS) component of NRC's document system (ADAMS). ADAMS is accessible from the NRC Web site at *http://www.nrc.gov/NRC/ADAMS/index.html* (the Public Electronic Reading Room).

Opportunity for a Hearing

Based on the EA and accompanying safety evaluation, NRC is preparing to amend License SNM–42. The NRC hereby provides that this is a proceeding on an application for amendment of a license falling within the scope of Subpart L, ''Informal Hearing Procedures for Adjudication in Materials Licensing Proceedings,'' of NRC's rules and practice for domestic licensing proceedings in 10 CFR part 2. Pursuant to Section 2.1205(a), any person whose interest may be affected by this proceeding may file a request for a hearing in accordance with Section 2.1205(d). A request for a hearing must be filed within thirty (30) days of the date of publication of this **Federal Register** notice.

A request for hearing or petition for leave to intervene must be filed with the Secretary of the Commission, U.S. Nuclear Regulatory Commission either:

1. By delivery to the Rulemakings and Adjudications Staff of the Secretary at One White Flint North, 11555 Rockville Pike, Rockville, MD 20852–2738; or
2. By mail or telegram addressed to the Secretary, U.S. Nuclear Regulatory Commission, Washington, DC 20555–0001. Attention: Rulemakings and Adjudications Staff.

In addition to meeting other applicable requirements of 10 CFR part

2 of the NRC's regulations, a request for a hearing filed by a person other than an applicant must describe in detail:

1. The interest of the requester in the proceeding;

2. How that interest may be affected by the results of the proceeding, including the reasons why the requestor should be permitted a hearing, with particular reference to the factors set out in Section 2.1205(h).

3. The requester's areas of concern about the licensing activity that is the subject matter of the proceeding; and

4. The circumstances establishing that the request for a hearing is timely in accordance with Section 2.1205(d).

In accordance with 10 CFR Section 2.1205(f), each request for a hearing must also be served, by delivering it personally or by mail to:

1. The applicant, BWX Technologies, Inc., P.O. Box 785, Lynchburg, VA 24505–0785; and

2. The NRC staff, by delivering to the Executive Director for Operations, One White Flint North, 11555 Rockville Pike, Rockville, MD 20852, or by mail, addressed to the Executive Director for Operations, U.S. Nuclear Regulatory Commission, Washington, DC 20555.

The NRC contact for this licensing action is Edwin Flack, who may be contacted at (301) 415–8115 or by e-mail at edf@nrc.gov for more information about the licensing action.

Dated at Rockville, Maryland, this 9th day of January 2002.

For the Nuclear Regulatory Commission.

Lidia Roché,

Acting Chief, Fuel Cycle Licensing Branch, Division of Fuel Cycle Safety and Safeguards, Office of Nuclear Material Safety and Safeguards.

[FR Doc. 02–1089 Filed 1–15–02; 8:45 am]

BILLING CODE 7590–01–P

SECURITIES AND EXCHANGE COMMISSION

Existing Collection; Comment Request

Upon Written Request, Copies Available From: Securities and Exchange Commission, Office of Filings and Information Services, Washington, DC 20549.

Extension:

Rule 7d–1, OMB Control No. 3235–0311, SEC File No. 270–176

Notice is hereby given that, pursuant to the Paperwork Reduction Act of 1995 (44 U.S.C. 3501–3520), the Securities and Exchange Commission (''Commission'') is soliciting comments on the collections of information summarized below. The Commission plans to submit these existing collections of information to the Office of Management and Budget for extension and approval.

Section 7(d) of the Investment Company Act of 1940 [15 U.S.C. 80a–7(d)] (the ''Act'' or ''Investment Company Act'') requires an investment company (''fund'') organized outside the United States (''foreign fund'') to obtain an order from the Commission allowing the fund to register under the Act before making a public offering of its securities through the United States mail or any means of interstate commerce. The Commission may issue an order only if it finds that it is both legally and practically feasible effectively to enforce the provisions of the Act against the foreign fund, and that the registration of the fund is consistent with the public interest and protection of investors.

Rule 7d–1 [17 CFR 270.7d–1] under the Act, which was adopted in 1954, specifies the conditions under which a Canadian management investment company (''Canadian fund'') may request an order from the Commission permitting it to register under the Act. Although rule 7d–1 by its terms applies only to Canadian funds, other foreign funds generally have agreed to comply with the requirements of rule 7d–1 as a prerequisite to receiving an order permitting those foreign funds' registration under the Act.

The rule requires a Canadian fund that wishes to register to file an application with the Commission that contains various undertakings and agreements by the fund. Certain of these undertakings and agreements, in turn, impose the following additional information collection requirements:

(1) The fund must file agreements between the fund and its directors, officers, and service providers requiring them to comply with the fund's charter and bylaws, the Act, and certain other obligations relating to the undertakings and agreements in the application;

(2) The fund and each of its directors, officers, and investment advisers that is not a U.S. resident, must file an irrevocable designation of the fund's custodian in the United States as agent for service of process;

(3) The fund's charter and bylaws must provide that (a) the fund will comply with certain provisions of the Act applicable to all funds, (b) the fund will maintain originals and copies of its books and records in the United States, and (c) the fund's contracts with its custodian, investment adviser, and principal underwriter, will contain certain terms, including a requirement that the adviser maintain originals or copies of pertinent records in the United States;

(4) The funds contracts with service providers will require that the provider perform the contract in accordance with the Act, the Securities Act of 1933 [15 U.S.C. 77a–77z–3], and the Securities Exchange Act of 1934 [15 U.S.C. 78a–78mm], as applicable; and

(5) The fund must file, and periodically revise, a list of persons affiliated with the fund or its adviser or underwriter.

Under section 7(d) of the Act the Commission may issue an order permitting a foreign fund's registration only if the Commission finds that ''by reason of special circumstances or arrangements, it is both legally and practically feasible effectively to enforce the provisions of the [Act].'' The information collection requirements are necessary to assure that the substantive provisions of the Act may be enforced as a matter of contract right in the United States or Canada by the fund's shareholders or by the Commission.

Certain information collection requirements in rule 7d–1 are associated with complying with the Act's provisions. These requirements are reflected in the information collection requirements applicable to those provisions for all registered funds.

The Commission believes that one fund is registered under rule 7d–1 and currently active. Apart from requirements under the Act applicable to all registered funds, rule 7d–1 imposes ongoing burdens to maintain records in the United States, and to update, as necessary, the fund's list of affiliated persons. The Commission staff estimates that the rule requires a total of three responses each year. The staff estimates that a respondent would make two responses each year under the rule, one response to maintain records in the United States and one response to update its list of affiliated persons. The Commission staff further estimates that a respondent's investment adviser would make one response each year under the rule to maintain records in the United States. Commission staff estimates that each recordkeeping response would require 6.25 hours each of secretarial and compliance clerk time at a cost of $13.48 and $12.77 per hour, respectively, and the response to update the list of affiliated persons would require 0.25 hours of secretarial time, for a total annual burden of 25.25 hours at a cost of $331.49. The estimated number of 25.25 burden hours is identical to the current allocation.

If a fund were to file an application under this rule, the Commission estimates that the rule would impose

initial information collection burdens (for filing an application, preparing the specified charter, bylaw, and contract provisions, designations of agents for service of process, and an initial list of affiliated persons, and establishing a means of keeping records in the United States) of approximately 90 hours for the fund and its associated persons. The Commission is not including these hours in its calculation of the annual burden because no foreign fund has applied under rule 7d–1 to register under the Act in the last three years.

After registration, a foreign fund may file a supplemental application seeking special relief designed for the fund's particular circumstances. Because rule 7d–1 does not mandate these applications and the fund determines whether to submit an application, the Commission has not allocated any burden hours for the applications.

The estimates of burden hours are made solely for the purposes of the Paperwork Reduction Act. The estimates are not derived from a comprehensive or even a representative survey or study of Commission rules and forms.

The Commission believes that the active registrant and its associated persons may spend (excluding the cost of burden hours) approximately $540 per year in maintaining records in the United States. These estimated costs include fees for a custodian or other agent to retain records, storage costs, and the costs of transmitting records.

If a Canadian or other foreign fund in the future applied to register under the Act under rule 7d–1, the fund initially might have capital and start-up costs (not including hourly burdens) of an estimated $17,280 to comply with the rule's initial information collection requirements. These costs include legal and processing-related fees for preparing the required documentation (such as the application, charter, bylaw, and contract provisions), designations for service of process, and the list of affiliated persons. Other related costs would include fees for establishing arrangements with a custodian or other agent for maintaining records in the United States, copying and transportation costs for records, and the costs of purchasing or leasing computer equipment, software, or other record storage equipment for records maintained in electronic or photographic form.

The Commission expects that a fund and its sponsors would incur these costs immediately, and that the annualized cost of the expenditures would be $17,280 in the first year. Some expenditures might involve capital improvements, such as computer equipment, having expected useful lives for which annualized figures beyond the first year would be meaningful. These annualized figures are not provided, however, because, in most cases, the expenses would be incurred immediately rather than on an annual basis. The Commission is not including these costs in its calculation of the annualized capital/start-up costs because no foreign fund has applied under rule 7d–1 to register under the Act pursuant to rule 7d–1 in the last three years.

We request written comment on: (a) Whether the collections of information are necessary for the proper performance of the functions of the Commission, including whether the information has practical utility; (b) the accuracy of the Commission's estimate of the burdens of the collection of information; (c) ways to enhance the quality, utility, and clarity of the information collected; and (d) ways to minimize the burden of the collection of information on respondents, including through the use of automated collection techniques or other forms of information technology. We will consider comments and suggestions submitted in writing within 60 days of this publication.

Direct your written comments to Michael E. Bartell, Associate Executive Director, Officer of Information Technology, Securities and Exchange Commission, Mail Stop 0–4, 450 5th Street, NW., Washington, DC 20549.

Dated: January 9, 2002.

Margaret H. McFarland,

Deputy Secretary.

[FR Doc. 02–1098 Filed 1–15–02; 8:45 am]

BILLING CODE 8010–01–M

SECURITIES AND EXCHANGE COMMISSION

[Release No. 34–45260; File No. SR–Amex–2001–19]

Self-Regulatory Organizations; Order Approving a Proposed Rule Change and Amendment Nos. 1, 2, 3 and 4 Thereto by the American Stock Exchange LLC Relating to Its Performance Evaluation and Allocations Procedures

January 9, 2002.

On March 19, 2001, the American Stock Exchange LLC (''Amex'' or ''Exchange'') filed with the Securities and Exchange Commission (''SEC'' or ''Commission''), pursuant to section 19(b)(1) of the Securities Exchange Act of 1934 (''Act'')[1] and Rule 19b–4 thereunder,[2] a proposed rule change to codify the Exchange's performance evaluation and allocations procedures. On May 31, 2001, the Exchange submitted Amendment No. 1 to the proposed rule change.[3] On August 13, 2001, the Exchange submitted Amendment No. 2 to the proposed rule change.[4] On August 27, 2001, the Exchange submitted Amendment No. 3 to the proposed rule change.[5] The proposed rule change, as amended, was published in the **Federal Register** on October 31, 2001.[6] On December 18, 2001, the Exchange submitted Amendment No. 4 to the proposed rule change.[7] The Commission received no comments on the proposed rule change. This order approves the proposed rule change, as amended, and approves Amendment No. 4 on an accelerated basis.

I. Description of the Proposed Rule Change

The Exchange proposes to adopt Amex Rules 26 and 27 to codify the

---

[1] 15 U.S.C. 78s(b)(1).

[2] 17 CFR 240.19b–4.

[3] *See* Letter from Bill Floyd-Jones, Jr., Assistant General Counsel, Legal and Regulatory, Amex, to Katherine A. England, Assistant Director, Division of Market Regulation (''Division''), Commission (May 31, 2001). Amendment No. 1 adds discussion to the purpose section of the proposal regarding the ability of the Performance Committee to take appropriate action should a member or member organization fail without a reasonable excuse to meet with the committee after receiving notice. In addition, Amendment No. 1 corrects structural and typographical errors that appeared in the proposed rule language.

[4] *See* Letter from Bill Floyd-Jones, Jr., Assistant General Counsel, Legal and Regulatory, Amex, to Katherine A. England, Assistant Director, Division, Commission (August 10, 2001). Amendment No. 2 adds a reference to the Special Allocations Committee in the proposal and proposed rule text; adds allocations procedures for structured products and Exchange Traded Funds; and makes technical changes to the proposed rule test.

[5] *See* Letter from Bill Floyd-Jones, Jr., Assistant General Counsel, Legal and Regulatory, Amex, to Katherine A. England, Assistant Director, Division, Commission (August 24, 2001). Amendment No. 3 clarifies the Performance and Allocations Committee review procedures.

[6] *See* Securities Exchange Act Release No. 44972, (October 23, 2001), 66 FR 55031 (SR–Amex–2001–19).

[7] *See* Letter from Geraldine Brindisi, Vice President and Corporate Secretary, Amex, to Katherine A. England, Assistant Director, Division of Market Regulation (''Division''), Commission (December 14, 2001). Amendment No. 4 (1) clarifies that the Adjudicatory Council shall review the written statements and supporting documents submitted by the appellant and Committee in connection with the appeal; (2) specifies in the proposed rule text that the specialist will receive written notice or notice will be posted on one of the Exchange's websites of allocation decisions by the Allocations Committee; (3) decreases the number of days an appellant would have to submit a timely application for review; and (4) makes technical changes to the proposed rule text.

Exchange's performance evaluation and allocations procedures in order to make them readily available in one accessible location. Performance evaluation is the process by which the Exchange reviews Floor member conduct and takes remedial action where necessary to improve performance. The registration of specialists (''allocations'') is the process by which the Exchange matches appropriate specialists to particular securities.

Proposed Rule 26 describes the composition of the Performance Committee, and allows the Performance Committee to delegate some or all its responsibilities to one or more subcommittees consisting of six persons. Proposed Rule 26 also describes the responsibilities of the Performance Committee with respect to specialists, registered traders, and brokers, including remedial actions available to the Performance Committee with respect to each group of Floor members.

Proposed Rule 27 describes the composition and responsibilities of the Options and Equities Allocations Committees. In addition, the Exchange represents that the Special Allocations Committee allocates securities that are not allocated by the Options or Equities Allocations Committees and securities with special characteristics as may be determined by the Chief Executive Officer of the Exchange or his or her designee.

II. Discussion

The Commission finds that the proposed rule change, as amended, is consistent with the requirements of the Act and the rules and regulations thereunder applicable to a national securities exchange.[8] In particular, the Commission finds that the proposal, as amended, is consistent with section 6(b)(5) of the Act,[9] which requires, among other things, that the Exchange's procedures are designed to prevent fraudulent and manipulative acts and practices, to promote just and equitable principles of trade, and, in general, to protect investors and the public interest.

The Commission believes that codifying the Exchange's performance evaluation and allocations procedures should help the Exchange to ensure quality markets by monitoring and encouraging the performance and competition among specialists and other Floor members, thereby protecting investors and the public interest.

[8] In approving this proposed rule change, the Commission has considered its impact on efficiency, competition, and capital formation. 15 U.S.C. 78c(f).

[9] 15 U.S.C. 78f(b)(5).

III. Amendment No. 4

The Commission finds good cause for approving Amendment No. 4 prior to the thirtieth day after notice of publication in the **Federal Register**. In addition to making minor technical changes to the proposed rule language, Amendment No. 4 (1) clarifies that the Adjudicatory Council shall review the written statements and supporting documents submitted by the appellant and Committee in connection with the appeal; (2) specifies in the proposed rule text that the specialist will receive written notice or notice will be posted on one of the Exchange's Web sites of allocation decisions by the Allocations Committee; and (3) decreases the number of days an appellant would have to submit a timely application for review.[10] The Commission finds that Amendment No. 4 to the proposed rule enhances the fairness of Amex procedures for the evaluation of specialists' performance and allocation measures. The Commission believes that it is not necessary to separately solicit comment on Amendment No. 4 before approving this proposal because it received no comments in response to the initial publication of the proposed rule change and Amendment No. 4 makes changes that improve the rule. The Commission therefore finds that the approval of Amendment No. 4 on an accelerated basis is appropriate.

IV. Solicitation of Comments

Interested persons are invited to submit written data, views and arguments concerning Amendment No. 4, including whether the amendment is consistent with the Act. Persons making written submissions should file six copies thereof with the Secretary, Securities and Exchange Commission, 450 Fifth Street, NW., Washington, DC 20549–0609. Copies of the submission, all subsequent amendments, all written statements with respect to the proposed rule change that are filed with the Commission, and all written communications relating to the proposed rule change between the Commission and any person, other than those that may be withheld from the public in accordance with the provisions of 5 U.S.C. 552, will be available for inspection and copying in the Commission's Public Reference Room. Copies of such filing will also be available for inspection and copying at the principal office of the Amex. All submissions should refer to File No. SR–Amex–2001–19 and should be submitted by February 6, 2002.

[10] The Amex, however, determined that it would not further amend the proposed rule to require that the Performance Committee maintain a verbatim record of its meetings, although the rule as proposed requires that a verbatim record of Adjudicatory Council proceedings be kept.

V. Conclusion

It Is Therefore Ordered, pursuant to section 19(b)(2) of the ACt,[11] that the proposed rule change (SR–AMEX–2001–19), as amended, is approved.

For the Commission, by the Division of Market Regulation, pursuant to the delegated authority.[12]

Margaret H. McFarland,

Deputy Secretary.

[FR Doc. 02–1099 Filed 1–15–02; 8:45 am]

BILLING CODE 8010–01–M

[11] 15 U.S.C. 78s(b)(2).

[12] 17 CFR 200.30–2(a)(12).

SECURITIES AND EXCHANGE COMMISSION

[Release No. 34–45259; File No. SR–NASD–2002–03]

Self-Regulatory Organizations; Notice of Filing and Immediate Effectiveness of Proposed Rule Change by the National Association of Securities Dealers, Inc. To Relieve Registered Representatives Serving in the Armed Forces From Continuing Education Requirements

January 9, 2002.

Pursuant to section 19(b)(1) of the Securities Exchange Act of 1934 (''Act''),[1] and Rule 19b–4 thereunder,[2] notice is hereby given that on January 7, 2002, the National Association of Securities Dealers, Inc. (''NASD''), through its wholly owned subsidiary, NASD Regulation, Inc. (''NASD Regulation''), filed with the Securities and Exchange Commission (''Commission'' or ''SEC'') the proposed rule change as described in Items I, II, and III below, which Items have been prepared by NASD Regulation. NASD Regulation filed the proposal pursuant to section 19(b)(3)(A) of the Act,[3] and Rule 19b–4(f)(1)[4] thereunder, in that the proposed rule change constitutes a stated policy, practice, or interpretation with respect to the meaning, administration, or enforcement of an existing rule, which renders the proposal effective upon filing with the Commission. The Commission is publishing this notice to solicit comments on the proposed rule change from interested persons.

[1] 15 U.S.C. 78s(b)(1).

[2] 17 CFR 240.19b–4.

[3] 15 U.S.C. 78s(b)(3)(A).

[4] 17 CFR 240.19b–4(f)(1).

I. Self-Regulatory Organization's Statement of the Terms of Substance of the Proposed Rule Change

NASD Regulation proposes to amend NASD IM–1000–2 to codify the staff's interpretive position regarding the relief from NASD Rule 1120, Continuing Education Requirements, for securities industry professionals who volunteer or are called into active military duty. The text of the proposed rule change is below. Proposed new language is in italics; proposed deletions are in brackets.

IM–1000–2. Status of Sole Proprietors and Registered Representatives Serving in the Armed Forces

Any *Registered* [registered] Representative of a member who volunteers or is called into the Armed Forces of the United States shall be placed, after proper notification to the Executive Office, upon inactive status and need not be re-registered by such member upon his *or her* return to active employment with the member.

Any member (Sole Proprietor) who temporarily closes his *or her* business by reason of volunteering or being called into the Armed Forces of the United States, shall be placed, after proper notification to the Executive Office, on inactive status until his *or her* return to active participation in the investment banking and securities business.

A Registered Representative who is placed on inactive status as set forth above shall not be included within the definition of ''Personnel'' for purposes of the dues or assessments as provided in Article VI of the By-Laws.

Any member placed on inactive status as set forth above shall not be required to pay dues or assessments during the pendency of such inactive status and shall not be required to pay an admission fee upon return to active participation in the investment banking and securities business.

A Registered Representative who is placed on inactive status as set forth above shall not be required to complete either of the Regulatory or Firm Elements of the continuing education requirements set forth in Rule 1120 during the pendency of such inactive status.

* * * * *

II. Self-Regulatory Organization's Statement of the Purpose of, and Statutory Basis for, the Proposed Rule Change

In its filing with the Commission, NASD Regulation included statements concerning the purpose of and basis for its proposal and discussed any comments it received regarding the proposal. The text of these statements may be examined at the places specified in Item IV below. NASD Regulation has prepared summaries, set forth in sections A, B and C below, of the most significant aspects of such statements.

A. Self-Regulatory Organization's Statement of the Purpose of, and Statutory Basis for, the Proposed Rule Change

1. Purpose

NASD IM–1000–2 (''the Interpretation'') addresses the registration status of sole proprietors and registered representatives serving in the armed forces. The Interpretation states that securities industry professionals who volunteer or are called into active military duty (''Active Duty Professionals'') will be placed in a specially designated ''inactive'' status once the NASD is notified of their military service, but will remain registered for NASD purposes. While the Interpretation does not address continuing education obligations with respect to Active Duty Professionals, NASD Regulation staff has interpreted Rule 1120 to relieve Active Duty Professionals from continuing education obligations for the period of time that they are on active duty. The proposed rule change codifies the staff's position through amendments to the Interpretation. The Securities Industry/Regulatory Council on Continuing Education (''CE Council'') supports the staff's views.[5]

NASD Regulation has, for the reasons set forth below, relieved Active Duty Professionals from continuing education requirements. Rule 1120(a)(2) provides that ''Unless otherwise determined by the Association, any registered persons who have not completed the Regulatory Element within the prescribed time frames will have their registrations deemed inactive until such time as the requirements of the program have been satisfied.'' A registered person may satisfy his or her Regulatory Element requirement at a Prometric Center in the United States and Canada, or at a VUE Center in Europe and the Pacific Rim. Because it is generally not practical for Active Duty Professionals to be at a facility that delivers the Regulatory Element, NASD Regulation believes that Active Duty Professionals should be relieved from fulfilling the Regulatory Element requirements that arise during the period of time that they are on active duty.

With respect to the Firm Element requirements of continuing education, Rule 1120(b)(1) provides that only persons who have ''direct contact with customers'' in the conduct of securities activities are subject to the Firm Element requirements. Active Duty Professionals are excluded from the Firm Element requirements because they do not have contact with customers. Accordingly, the proposed amendment to the Interpretation expressly states that Active Duty Professionals are not required to complete either of the Regulatory or Firm Elements of the continuing education requirements set forth in Rule 1120 during the pendency of such inactive status.

2. Statutory Basis

NASD Regulation believes that the proposed rule change is consistent with the provisions of section 15A(b)(6) of the Act,[6] which requires, among other things, that the Association's rules be designed to prevent fraudulent and manipulative acts and practices, to promote just and equitable principles of trade, and, in general to protect investors and the public interest. NASD Regulation believes that codifying the staff's interpretative position to relieve Active Duty Professionals from the NASD's continuing education requirements during the time they are on active duty is consistent with the protection of investors and the public interest.

B. Self-Regulatory Organization's Statement on Burden on Competition

NASD Regulation does not believe that the proposed rule change will result in any burden on competition that is not necessary or appropriate in furtherance of the purposes of the Act, as amended.

C. Self-Regulatory Organization's Statement on Comments on the Proposed Rule Change Received From Members, Participants or Others

Written comments were neither solicited nor received.

III. Date of Effectiveness of the Proposed Rule Change and Timing for Commission Action

The foregoing proposal has become effective pursuant to section 19(b)(3)(A) of the Act,[7] and Rule 19b–4(f)(1)[8]

[5] The CE Council, of which all of the self-regulatory organizations and 14 industry representatives are members, is responsible for the oversight of the continuing education program as a whole. The SEC and North American Securities Administrators Association also send liaisons to attend CE Council meetings.

[6] 15 U.S.C. 78o–3(b)(6).

[7] 15 U.S.C. 78s(b)(3)(A).

[8] 17 CFR 240.19b–4(f)(1).

thereunder, in that it constitutes a stated policy, practice, or interpretation with respect to the meeting, administration, or enforcement of an existing rule.

At any time within 60 days of the filing of the proposed rule change, the Commission may summarily abrogate such rule change if it appears to the Commission that such action is necessary or appropriate in the public interest, for the protection of investors, or otherwise in furtherance of the purposes of the Act.

IV. Solicitation of Comments

Interested persons are invited to submit written data, views, and arguments concerning the foregoing, including whether the proposal is consistent with the Act. Persons making written submissions should file six copies thereof with the Secretary, Securities and Exchange Commission, 450 Fifth Street, NW., Washington, DC 20549–0609. Copies of the submission, all subsequent amendments, all written statements with respect to the proposed rule change that are filed with the Commission, and all written communications relating to the proposed rule change between the Commission and any person, other than those that may be withheld from the public in accordance with the provisions of 5 U.S.C. 552, will be available for inspection and copying in the Commission's Public Reference Room. Copies of such filing will also be available for inspection and copying at the principal office of the NASD. All submissions should refer to file number SR–NASD–2002–03 and should be submitted by February 6, 2002.[9]

For the Commission, by the Division of Market Regulation, pursuant to delegated authority.

Margaret H. McFarland,

Deputy Secretary.

[FR Doc. 02–1103 Filed 1–15–02; 8:45 am]

BILLING CODE 8010–01–M

[9] 17 CFR 200.30–3(a)(12).

SECURITIES AND EXCHANGE COMMISSION

[Release No. 34–45261; File No. SR–NASD–00–02]

Self-Regulatory Organizations; Order Approving Proposed Rule Change by the National Association of Securities Dealers, Inc. Amending the NASD Code of Arbitration Procedure Rules 10335 and 10205(h) Relating to Injunctive Relief

January 9, 2002.

I. Introduction

On January 13, 2000, the National Association of Securities Dealers, Inc. (''NASD''), through its wholly-owned subsidiary NASD Regulation Inc. (''NASD Regulation'') filed with the Securities and Exchange Commission (''Commission''), pursuant to section 19(b)(1) of the Securities Exchange Act (''Exchange Act'') [1] and Rule 19b–4 thereunder,[2] a proposed rule change amending the NASD Code of Arbitration Procedure (''Code'') Rules 10335 and 10205(h) relating to injunctive relief.

NASD Regulation submitted to the Commission Amendment No. 1 to its proposed rule change on March 9, 2000 [3] and Amendment No. 2 on March 25, 2000.[4] On April 27, 2000, the proposed rule change, as amended, was published for comment in the **Federal Register**.[5] The Commission received 13 comment letters on the proposed rule change, as amended by Amendments No. 1 and 2.[6] On December 19, 2000, NASD, through NASD Dispute Resolution Inc. (''NASD Dispute Resolution''), filed Amendment No. 3 and a response to comments [7] and on December 21, 2000, filed a supplemental response to comments.[8] In response to Amendment No. 3 and NASD Supplemental Response, the Commission received two additional comment letters on the proposal.[9] NASD, through NASD Dispute Resolution, filed Amendment No. 4 and Amendment No. 5 on May 17, 2001 and August 10, 2001, respectively.[10] On October 25, 2001, the proposed rule change, as amended by Amendment Nos. 3, 4, and 5, was published for comment in the **Federal Register**.[11] The Commission received one additional comment letter on the amended proposal.[12] As discussed below, this

[1] 15 U.S.C. 78s(b)(1).

[2] 17 CFR 240.19b–4.

[3] *See* letter from Patrice Gliniecki, Vice President and Deputy General Counsel, NASD Regulation, to Katherine A. England, Assistant Director, Division of Market Regulation (''Division''), Commission, dated March 7, 2000 (''Amendment No. 1'').

[4] *See* letter from Patrice Gliniecki, Vice President and Deputy General Counsel, NASD Regulation, to Katherine A. England, Assistant Director, Division, Commission, dated March 24, 2000 (''Amendment No. 2'').

[5] *See* Securities Exchange Act Release No. 42606 (April 3, 2000), 65 FR 18405 (April 7, 2000).

[6] Letter from Alan Foxman, Esq. Chairman, National Association of Investment Professionals, Government and Regulatory Committee, and T. Sheridan O'Keefe, President, National Association of Investment Professionals, to Jonathan G. Katz, Secretary, Commission, dated April 26, 2000 (''Foxman Letter''); letter from Thomas M. Campbell, Smith Campbell & Paduano, to Katherine A. England, Assistant Director, Division, Commission, dated April 27, 2000 (''Campbell Letter''); letter from John W. Shaw and Jeffrey A. Ziesman, Berkowitz, Feldmiller, Stanton, Brandt, Williams & Stueve, LLP, counsel to Sutro & Co. Incorporated, to Secretary, Commission, dated April 28, 2000 (''Sutro Letter''); letter from Dana N. Pescosolido, Law Offices of Saul, Ewing, Weinberg & Green, counsel to Ferris, Baker Watts, Incorporated, Janney Montgomery Scott LLC, Legg Mason Wood Walker, Incorporated, Morgan Keegan & Company, Inc. and Raymond James & Associates, Inc. to Jonathan G. Katz, Secretary, Commission, dated April 28, 2000 (''Pescosolido Letter''); letter from Dan Jamieson, Public Investor, to Jonathan Katz, Secretary, Commission, dated May 1, 2000 (''Jamieson Letter''); e-mail from Joseph G. Kathrein Jr. to Commission, dated May 23, 2000 (''Kathrein E-mail''); letter from Gary R. Irwin, Vice President and Group Counsel, American Express Financial Corporation, American Express Financial Advisors, to Jonathan G. Katz, Secretary, Commission, dated May 25, 2000 (''Irwin Letter''); e-mail from Kosta, to Commission, dated July 10, 2000 (''Kosta E-mail''); e-mail from Michael A. Yoakum, to Commission, dated July 10, 2000 (''Yoakum E-mail''); e-mail from Frank Louis Blair Koucky III to Commission, dated July 11, 2000 (''Koucky E-mail''); e-mail from Gilbert A. Armour, Financial Consultant, Kirlin Securities, to Commission, dated July 11, 2000 (''Armour E-mail''); letter from Bob Chernow, to J. Katz, Secretary, Commission, dated July 10, 2000 (''Chernow Letter''); and letter from Dan Jamieson, to Jonathan Katz, Secretary, Commission, dated January 3, 2001 (''Jamieson Letter 2'').

[7] *See* letter from Laura Leedy Gansler, Counsel, NASD Dispute Resolution, to Katherine A. England, Assistant Director, Division, Commission, dated December 18, 2000 (''Amendment No. 3'').

[8] *See* letter from Laura Leedy Gansler, Counsel, NASD Dispute Resolution, to Katherine A. England, Assistant Director, Division, Commission, dated December 21, 2000 (''NASD Supplemental Response'')

[9] Letter from Dan Jamieson, to Jonathan Katz, Secretary, Commission, dated January 4, 2001 (''Jamieson Letter 3''); and letter from Dana N. Pescosolido, Saul Ewing LLP, to Katherine A. England, Assistant Director, Division, Commission, dated January 20, 2001 (''Pescosolido Letter 2,'' and together with Pescosolido Letter, ''Pescosolido Letters'').

[10] *See* letter from Laura Leedy Gansler, Counsel, NASD Dispute Resolution, to Florence Harmon, Senior Special Counsel, Division, Commission, dated May 17, 2001 (''Amendment No 4''), and letter from Laura Leedy Gansler, Counsel, NASD Dispute Resolution, to Florence Harmon, Senior Special Counsel, Division, Commission, dated August 10, 2001 (''Amendment No. 5'').

[11] *See* Securities Exchange Act Release No. 44950 (October 18, 2001), 66 FR 54041 (October 25, 2001) (''Second Release'').

[12] *See* letter from Dan Jamieson, to Jonathan Katz, Secretary, Commission, dated November 1, 2001 (''Jamieson Letter 4,'' and together with Jamieson Letter, Jamieson Letter 2 and Jamieson Letter 3, ''Jamieson Letters'').

order approves the proposed rule change, as amended.

II. Description

Background

NASD proposes to amend Rules 10335 and 10205(h) of the Code to simplify and clarify the procedures for obtaining injunctive relief in certain disputes subject to arbitration. Rule 10335, the NASD's pilot injunctive relief rule, provides procedures for obtaining interim injunctive relief in controversies involving member firms and associated persons in arbitration. NASD Rule 10335 currently provides that parties to arbitration may seek temporary injunctive relief within the arbitration process or from a court of competent jurisdiction. NASD represents that this rule has primarily been used in ''raiding cases,'' or cases involving the transfer of an employee to another firm. NASD Rule 10335 took effect on January 3, 1996 for a one-year pilot period. The Commission has periodically extended the initial pilot period in order to permit NASD Dispute Resolution to assess the effectiveness of the rule. The pilot rule is currently due to expire on July 1, 2002.[13]

NASD represents that the principal objectives of the amended proposal are to simplify and expedite the procedures for seeking immediate injunctive relief in intra-industry disputes and to fairly and effectively integrate court-ordered initial injunctive relief with the arbitration of the underlying claims in the same disputes.[14] The amended proposal would (i) eliminate the option of seeking temporary injunctive relief within the arbitration process by requiring parties to seek temporary injunctive relief in a court of competent jurisdiction; (ii) require simultaneous filing of an arbitration claim for permanent injunctive and all other relief; (iii) require arbitration to be expedited once interim relief has been granted; (iv) set forth the procedures for establishing the composition of the arbitration panel; (v) specify the applicable legal standard for granting or denying a request for permanent injunctive relief; (vi) address the effect of court-ordered temporary injunctive relief during and after arbitration; and (vii) address the allocation of arbitration fees, costs and expenses, and arbitrator honoraria.

Temporary Injunctive Relief

The proposed rule change would eliminate arbitration as a forum for seeking temporary injunctive relief. Parties would still be able to seek temporary injunctive relief, but only in a court of competent jurisdiction. Under the proposal, a party may seek temporary injunctive relief in court if another party has already filed a claim arising from the same dispute in arbitration, provided that an arbitration hearing on a request for permanent injunctive relief has not yet begun. NASD Dispute Resolution clarified that an arbitration hearing on permanent injunctive relief would not include preparations for the arbitration hearing, such as pre-hearing conferences or assembling an arbitration panel or resolving discovery or other pre-hearing matters.[15] The proposal would require any party seeking a temporary injunctive order from a court to simultaneously file a Statement of Claim in arbitration requesting permanent injunctive and all other relief.

Several commenters criticized the elimination of arbitration as a forum for the issue of temporary injunctive relief.[16] Two commenters argued that NASD did not offer any statistical data or evidence justifying the elimination of this option.[17] Three commenters believe that requiring parties to seek interim relief from courts and having the ultimate conflict resolved by arbitrators is inefficient and will increase the expense to the parties.[18] Another commenter argued that the experience and training of NASD arbitrators made them more qualified that judges to make decisions relating to temporary injunctive relief.[19] In response, NASD explained that its experience has shown that it is not possible to obtain temporary injunctive relief in arbitration as quickly as in court, due largely to the need to appoint and convene arbitrators specifically for each case.[20] One commenter responded by arguing that arbitration is the preferred option for some parties in spite of time delays.[21]

Commenters concerned about the interests of associated persons stated that eliminating arbitration as a forum for temporary injunctive relief favors the party requesting injunctive relief because these commenters believe that courts are more likely to grant injunctive relief than arbitrators.[22] NASD believes that this premise is flawed because the proposed NASD Rule 10335 does not govern when such relief is appropriate, either in court or in arbitration. NASD notes that the same substantive legal standards for granting injunctive relief apply in both forums. NASD contends that the elimination of the option of seeking temporary injunctive relief in arbitration would only discriminate against associated persons and investors if courts applied the applicable legal standards in a discriminatory manner. NASD believes that because there is no evidence that courts apply the applicable legal standard in a discriminatory manner, the elimination of the option of seeking temporary injunctive relief in arbitration is a procedural change designed to expedite this process and should not affect the likelihood of whether such relief is granted or denied.[23] One commenter responded by arguing that Rule 10335 is more than a procedural rule.[24]

The same commenters argued that injunctions are anticompetitive, as highly profitable for firms, are prejudicial to the investing public, and conflict with other NASD rules that protect customers' rights.[25] In response, NASD stated that while these questions may warrant attention, NASD Rule 10335 is not the appropriate vehicle for addressing them because it is a procedural rule.[26] In addition, NASD notes that temporary restraining orders were always an option under the pilot rule, which the Commission approved as consistent with the Exchange Act.[27]

[13] *See* Securities Exchange Act Release Act No. 45162 (December 18, 2001), 66 FR 66489 (December 26, 2001). The rules approved pursuant to this order supersede and replace the pilot program.

[14] *See* Second Release, *supra* note 11.

[15] Telephone call between Florence Harmon, Senior Special Counsel, Division, Commission, and Laura Leedy Gansler, Counsel, NASD Dispute Resolution, on January 3, 2002.

[16] *See* Foxman Letter, Jamieson Letter and Sutro Letter, *supra* note 6.

[17] *See* Foxman Letter and Jamieson Letters, *supra* notes 6, 9 and 12.

[18] *See* Foxman Letter, Sutro Letter, and Jamieson Letter, *supra* note 6.

[19] *See* Sutro Letter, *supra* note 6.

[20] *See* Amendment No. 3, *supra* note 7.

[21] *See* Pescosolido Letter 2, *supra* note 9.

[22] *See* Foxman Letter, Pescosolido Letter, Jamieson Letter, Kosta E-mail, Yoakum E-mail, Koucky E-mail, Armour E-mail, and Chernow Letter, *supra* note 6.

[23] *See* Amendment No. 3, *supra* note 7.

[24] *See* Pescosolido Letter 2, *supra* note 9.

[25] *See* Foxman Letter, Pescosolido Letter, Jamieson Letter, Kosta E-mail, Yoakum E-mail, Koucky E-mail, Armour E-mail, and Chernow Letter, *supra* note 6.

[26] *See* Amendment No. 3, *supra* note 7. We note that on December 21, 2001, NASD Dispute Resolution submitted a proposed rule change, which was effective upon filing, that expressly interprets NASD Rule 2110 to prohibit members from interfering with a customer's request to transfer his or her account in connection with the change in employment of the customer's registered representative, provided that the account is not subject to any lien for monies owed by the customer or other bona fide claim. *See* Securities Exchange Act Release No. 45239 (January 4, 2001) (pertaining to NASD IM–2110–7 Interfering With the Transfer of Customer Accounts in the Context of Employment Disputes).

[27] *See* Amendment No. 3, *supra* note 7.

Two comments made suggestions for improving the provision requiring simultaneous filing of the court and arbitration claims.[28] In response, NASD amended the proposal to require the party seeking temporary injunctive relief to simultaneously file with the Director of Arbitration a Statement of Claim requesting permanent injunctive and all other relief and to serve such Statement of Claim on all other parties in the same manner and at the same time as it is filed with the Director.[29] The proposal provides that the filing and service of both the court filed complaint seeking temporary injunctive relief and the simultaneous arbitration filed complaint seeking permanent injunctive and all other relief shall be made by facsimile, overnight delivery or messenger.[30]

Hearing or Request for Permanent Relief; Selection of Arbitrators; Appointment of Chairperson

The proposal initially provided that if a court issues a temporary injunctive order, the hearing on the request for permanent relief must begin within 15 calendar days of the date the court issued its temporary injunctive order. One commenter stated that parties' lawyers would be able to stall the arbitration hearing by claiming to be unavailable within 15 days.[31] Another commenter found the language unclear as to whether the hearing itself was required to begin or whether preparations for the hearing, such as assembling an arbitration panel, were required to have begun within 15 days.[32] In response, NASD amended the proposal by adding language to paragraph (a)(1) of proposed Rule 10335 to clarify that the hearing itself would be required to begin within 15 days of the date a court issues a temporary injunctive order.[33] NASD Dispute Resolution clarified that the arbitration hearing on the merits must begin within 15 calendar days of the date that the court issues the order, and that this does not include preparations for the arbitration hearing, such as pre-hearing conferences or assembling a panel or resolving discovery disputes or other pre-hearing matters.[34]

Under the proposed rule change, the hearing on the request for permanent injunctive relief would be heard by a panel of three arbitrators. In cases in which the underlying dispute would be heard by a panel of non-public arbitrators as defined in NASD Rule 10308(a)(4), the three arbitrators would be non-public. In cases in which the underlying dispute would be heard by a public arbitrator or panel consisting of a majority of public arbitrators under NASD Rule 10202, the three arbitrator panel hearing the request for permanent relief would consist of a majority of public arbitrators as defined in NASD Rule 10308(a)(5).

In cases in which all of the members of the arbitration panel are non-public, the Director of Arbitration would generate and provide to the parties a list of seven arbitrators from a national roster of arbitrators. NASD originally proposed that at least a majority of the arbitrators on the list would be lawyers specializing in injunctive relief. Each party would be able to exercise one strike to the arbitrators on the list.

In cases in which the panel of arbitrators consists of a majority of public arbitrators, the Director of Arbitration would generate and provide to the parties a list of nine arbitrators from a national roster of arbitrators. NASD originally proposed that at least a majority of the arbitrators in those cases would be (1) public arbitrators and (2) lawyers specializing in injunctive relief. In those cases, the parties would be able to exercise two strikes to the arbitrators on the list.

Regardless of the number of strikes given to the parties, the rule would incorporate by reference other NASD Code of Arbitration rules providing unlimited strikes for cause, so that parties would always be able to strike arbitrators who were unqualified due to conflicts of interest or for other reasons constituting cause.

Under the proposed rule change, the parties would be required to inform the Director of their preference of chairperson of the arbitration panel by the close of business on the next business day after receiving notice of the panel members. If the parties did not agree on a chairperson within that time, the Director would select the chairperson. The proposal initially provided that, in cases in which the panel consists of a majority of public arbitrators, the chairperson would be one of the public arbitrators who is a lawyer specializing in injunctive relief; and in cases in which the panel consists of non-public arbitrators, the chairperson would be a lawyer specializing in injunctive relief. The proposal initially provided that, whenever possible, the Director would select as chairperson the lawyer specializing in injunctive relief whom the parties have ranked the highest. The proposed rule change also provides that the Director of Arbitration may exercise discretionary authority and make any decision that is consistent with the purposes of the rule and the arbitrator selection rule (NASD Rule 10308) to facilitate the appointment of arbitration panels and the selection of the chairperson.

Several commenters concerned with the interests of associated persons expressed dissatisfaction with a list of potential arbitrators (and a chairman) composed of a majority of ''lawyers specializing in injunctive relief.'' [35] They found this requirement unclear, too limiting and fraught with the potential for bias.[36] In response, NASD amended the proposal to provide that one less than a majority of the list of arbitrators be lawyers ''with experience litigating cases involving injunctive relief'' and that the chairman of the panel, if possible, also be a lawyer with ''experinece litigating cases involving injunctive relief.'' [37]

NASD also made the following changes to the procedure for selecting an arbitration panel: the Director shall send to the parties the employment history for the past 10 years and other background information for each listed arbitrator; the Director shall consolidate the parties' rankings; and shall appoint arbitrators based on the order of rankings on the consolidated list, subject to the arbitrators' availability and disqualification; and, in cases in which the panel consists of a majority of public arbitrators, the Director shall select a public arbitrator as chairperson.[38]

Applicable Legal Standard

The proposed rule change provides that the decision to grant or deny a request for permanent injunctive relief would be governed by an enforceable choice of law agreement between the parties, or, if there were no such agreement, then by the law of the state where the events upon which the request is based occurred. Some commenters argued that permitting an enforceable choice of law agreement between the parties to establish the

[28] *See* Sutro Letter and Campbell Letter, *supra* note 6.

[29] *See* Amendment No. 5, *supra* note 10.

[30] *See* Amendment No. 4, *supra* note 10.

[31] *See* Pescosolido Letter 2, *supra* note 9.

[32] *See* Sutro Letter, *supra* note 9.

[33] *See* Amendment No. 4, *supra* note 10.

[34] Telephone call between Florence Harmon, Senior Special Counsel, Division, Commission, and Laura Leedy Gansler, Counsel, NASD Dispute Resolution, on January 3, 2002. *See supra* note 15.

[35] *See* Sutro Letter, Campbell Letter, Pescosolido Letters, Jamieson Letter 3 and Jamieson Letter 4, *supra* notes 6, 9 and 12.

[36] *Id.*

[37] *See* Amendment No. 3, *supra* note 7 and Amendment No. 5, *supra* note 10.

[38] *See* Amendment No. 4 and Amendment No. 5, *supra* note 10.

governing law would be unfair to associated persons since firms draft these agreements in their own favor and force associated persons to sign them.[39] One commenter was also concerned that the absence of a uniform legal standard would yield wildly inconsistent results.[40] In response, NASD stated that this provision codifies the status quo, which is that enforceable choice of law agreements are applicable to requests for injunctive relief in arbitration and that this provision would not render any otherwise unenforceable choice-of-law provision or employment contract enforceable.[41]

Temporary Injunctive Order in Effect During Hearing

The proposed rule change provides that, in the event that a court-issued temporary injunctive order is still in effect, after a full and fair presentation of evidence from all relevant parties, an arbitration panel may prohibit the parties from seeking an extension of the pending court order, and, if appropriate, may order the parties to jointly move the court to modify or dissolve the pending order. In the event that a panel's order conflicts with a pending court order, the panel's order will become effective upon expiration of the pending court order.

Some commenters expressed concern that this process would keep the injunctive order in place longer than was fair and appropriate because arbitrators could not make decisions on injunctive issues until a full and fair hearing had occurred. Commenters argued that this could be an extended period of time because of the potential for a fifteen day delay before an arbitration hearing would be required to begin; the hearing would not be required to be expedited; the hearing would not be required to be held on consecutive days; and the temporary injunctive order could not be terminated until the parties petitioned the court after arbitration was complete.[42]

NASD responded that it does not believe that arbitration panels have the authority to dissolve, modify or supersede a court order; rather, arbitrators have the authority to order parties not to seek extensions of pending orders, or to jointly ask the court to modify or dissolve a pending order, if necessary. NASD does not believe arbitrators should exercise this authority until they have heard a full and fair presentation of the evidence regarding a request for permanent relief to ensure that arbitrators will be in a position to make an informed decision. In response to commenters' concerns about how long it would take arbitrators to reach a decision after a full and fair hearing, NASD stated that statistics on the average length of evidentiary hearings on requests for permanent injunctive relief suggest that, in most cases, arbitrators will be in a position to make that decision in a short period of time because the average duration of such hearings is 1.36 days, and almost 80% of all cases that go to a hearing are resolved after one day of hearings.[43] NASD also revised the proposal to expedite a hearing on permanent injunctive relief. Under the amended proposal, unless the parties agreement otherwise, a hearing lasting more than one day would be held on consecutive days when reasonably possible.[44] NASD also added language to make clear that arbitrators may make decisions on the issue of permanent injunctive relief and hold subsequent hearing sessions to decide other issues between the parties, including damages or other relief, to allow the parties time to gather or present additional evidence without delaying the termination of a temporary injunctive order.[45]

In response to a comment that judges often include language in their orders that transfer authority to arbitrators,[46] NASD further stated that the provision requiring arbitrators to have a full and fair hearing before ordering parties to petition the court for dismissal of a temporary injunctive order does not apply to court orders that expire by their own terms or otherwise contain provisions that confer authority on arbitrators to modify, amend, or dissolve the order.[47]

Fees

NASD originally proposed that the parties would jointly bear the travel-related costs and expenses of the arbitrators appointed to hear the request for permanent injunctive relief and prohibited arbitrators from reallocating arbitrator travel costs and expenses among the parties. Under the proposed rule change, notwithstanding any other provision of the Code, the chairperson of the panel hearing a request for permanent injunctive relief pursuant to this rule shall receive an honorarium of $375 for each single session, and $700 for each double session, of the hearing. Each other member of the panel shall receive an honorarium of $300 for each single session, and $600 for each double session, of the hearing. The proposal initially provided for the parties to share the difference between these amounts and the amounts panel members and the chairperson would otherwise receive under the Code and prohibited arbitrators from reallocating these amounts among the parties.[48]

The proposed rule change also provides that the party seeking injunctive relief shall pay the expedited hearing fees pursuant to Rule 10205(h), or, where both sides seek such relief, both parties shall pay such fees. In either event, the proposed rule specifically provides that the arbitrators shall have the authority to allocate such fees among the parties. The proposed rule would have no effect on the obligations of parties to pay, or on the authority of arbitrators to allocate, any other hearing fees required under the Code.

Several commenters argued that the provision prohibiting arbitrators from reallocating the travel-related costs and expenses of the arbitrators among the parties was unfair to associated persons.[49] In response, NASD amended the text of the proposed rule change to expressly permit arbitrators to reallocate the travel-related costs and expenses of arbitrators and the arbitrators' fees among the parties.[50] NASD also clarified that the parties were responsible for the ''reasonable'' travel-related costs and expenses incurred by arbitrators who are required to travel to a hearing location other than their primary hearing location or locations.[51]

Development of Proposal

Several commenters stated that the subcommittee that worked on the proposal consisted only of representatives from retail firms, and did not include representatives from associated persons and the investing

[39] *See* Foxman Letter, Sutro Letter, Jamieson Letter 2 and Jamieson Letter 3, *supra* notes 6, 9 and 12.

[40] *See* Sutro Letter, *supra* note 6.

[41] *See* Amendment No. 3, *supra* note 7.

[42] *See* Foxman Letter, Sutro Letter, Pescosolido Letters, Jamieson Letters, and Campbell Letter, *supra* notes 6, 9 and 12.

[43] *See* Amendment No. 3, *supra* note 7. One commenter responded that these statistics were inaccurate. This commenter, however, conceded that if hearings took place within 15 days following an injunction on consecutive days his concerns would not be as critical. *See* Pescosolido Letter 2, *supra* note 9.

[44] *See* Amendment No. 4 *supra* note 10.

[45] *See* Amendment No. 4, *supra* note 10.

[46] *See* Pescosolido Letter 2, *supra* note 9.

[47] *See* Amendment No. 4, *supra* note 10.

[48] NASD proposes that the payment of ordinary honoraria, as provided in NASD IM–10104 of the Code, shall not be affected by this provision.

[49] *See* James Letters, Sutro Letter, Pescosolido Letter, and Campbell Letter, *supra* notes 6, 9 and 12.

[50] *See* Amendment No. 3 and Amendment No. 4, *supra* note 7 and note 10.

[51] *See* Amendment No. 4, *supra* note 10.

public.[52] In response, NASD stated that it believed that interests of all relevant parties, including member firms, associated persons and the investing public were represented during the process. The committee included member firms with interests on both sides of raiding cases. NASD believes that views of associated persons and the investing public were represented by these firms. In addition, the proposal was reviewed and approved by the full National Arbitration and Mediation Committee, which consists of a majority of public members, as well as the Board of Directors of NASD Dispute Resolution. NASD believes that ''advocates of the interests of associated persons, as well as investors, have had ample opportunity to express opinions about the proposed rule change at all levels of review, and changes have been made throughout the process to address the interests of both constituencies''.[53]

III. Discussion

After careful review, the Commission finds, for the reasons discussed below, that the proposed rule change, as amended, is consistent with the Exchange Act and the rules and regulations thereunder applicable to the NASD. Specifically, the Commission finds the proposed rule change, as amended, is consistent with sections 15A(b)(5), 15A(b)(6) and 15A(b)(9) of the Exchange Act.[54]

NASD Rule 10335 was initially adopted as a pilot program in order to give NASD the opportunity to assess the rule's effectiveness.[55] NASD represents, based on its experience with Rule 10335, that the current rule is confusing and unnecessarily complex. NASD represents that the proposed rule change is the result of lengthy deliberation and careful compromise by the Injunctive Relief Rule Subcommittee of the National Arbitration and Mediation Committee (''NAMC''). Before the proposal was filed with the Commission, it was approved by the National Arbitration and Mediation Committee, which consisted of a majority of public members, as well as the board of NASD Regulation. The proposal was published for comment on two separate occasions, after Amendment No. 2 and Amendment No. 5 were filed, respectively. The Commission received 16 comment letters. The NASD incorporated many of the commenters' suggestions in the proposal, as amended.

In approving this proposal, the Commission does not address the merit of injunctive relief in the context of NASD Rule 10335. In large part, NASD Rule 10335 is a procedural rule that establishes the process for seeking temporary injunctive relief. The Commission notes that NASD Dispute Resolution has recently provided interpretive guidance to NASD Rule 2110 designed to protect investors by prohibiting members from interfering with a customer's request to transfer his or her account in connection with the change in employment of the customer's registered representative.[56]

Further, the Commission notes that the proposal, as amended, contains provisions that address the commenters' concerns pertaining to associated persons and public investors. A party seeking temporary injunctive relief is required to file its permanent claim at the same time it files its temporary claim and must simultaneously serve such claim on all parties by facsimile, overnight delivery or messenger. To keep the arbitration process as short as possible, once temporary injunctive relief has been granted, an arbitration hearing on permanent injunctive and all other relief must begin within 15 calendar days, must be held on consecutive days when reasonably possible, and arbitrators may hold separate subsequent hearings to decide other issues in order to expedite the ''full and fair'' hearing on permanent injunctive relief.

To address commenters' concerns regarding the composition of the arbitration panel, NASD made a number of changes to the proposal. In particular, a portion, but not a majority, of the list of potential arbitrators will be required to be lawyers with experience litigating cases involving injunctive relief. Further, the parties will be provided with a 10-year employment history for each potential arbitrator and the arbitrators will be selected based on the consolidated rankings of the parties. In addition, NASD modified the proposal to address certain commenters' concerns about fees. Specifically, the arbitrators now have the discretion to reallocate the reasonable travel-related costs and expenses incurred by the arbitrators and the arbitrators' fees among the parties.[57]

IV. Commission Findings and Order Granting Approval of the Proposed Rule Change

After careful consideration, the Commission finds that the proposed rule change, as amended, is consistent with the provisions of section 15A of the Exchange Act and the rules and regulations thereunder that govern NASD.[58] In particular, the Commission finds that the proposal is consistent with section 15A(b)(6) of the Exchange Act[59] because the proposal establishes procedures that allow for the quick resolution of disputes involving injunctive relief, provides a process for selecting a balanced arbitration panel, and improves procedural notice and service of injunctive relief claims. The Commission also finds that the proposed rule change, as amended, is consistent with the provisions of sections 15A(b)(5) of the Exchange Act[60] because the rule change provides that the parties are responsible for the ''reasonable'' travel-related costs and expenses of the arbitrators, and permits the arbitrators to use their discretion to reallocate costs and fees among the parties.

In reviewing this proposal, the Commission is required to consider whether the proposal will promote competition, efficiency and capital formation.[61] In this regard, the proposal provides a process that should help expedite and streamline the process for obtaining injunctive relief and deciding cases on the merits where injunctive relief is ordered. Further, the Commission does not believe that this procedural process, which does not address employment contracts, should

[52] *See* Foxman Letter, Campbell Letter, Pescosolido Letter, and Jamieson Letters, *supra* note 6.

[53] *See* Amendment No. 3, *supra* note 7.

[54] 15 U.S.C. 78*o*–3(b)(5), 15 U.S.C. 78*o*–3(b)(6) and 15 U.S.C. 78*o*–3(b)(9).

[55] *See* Securities Exchange Act Release No. 36145 (August 23, 1995), 60 FR 45200 (August 30, 1995); Securities Exchange Act Release No. 38069 (December 20, 1996), 61 FR 68806 (December 30 1996); Securities Exchange Act Release No. 39458 (December 17, 1997), 62 FR 67423 (December 24, 1997), Securities Exchange Act Release No. 40124 (June 24, 1998), 63 FR 36282 (July 2, 1998); Securities Exchange Act Release No. 40846 (December 28, 1998), 64 FR 548 (January 5, 1999); Securities Exchange Act Release No. 41532 (June 16, 1999), 64 FR 33335 (June 22, 1999); Securities Exchange Act Release No. 42280 (December 28, 1999), 65 FR 1211 (January 7, 2000) and Securities Exchange Act Release No. 43813 (January 5, 2001), 66 FR 2629 (January 16, 2001).

[56] *See* note 26, *supra.*

[57] Jamieson Letter 4 argued that in the context of arbitration, cost-splitting is illegal even if the arbitrators are permitted to reallocate costs based on a recent California Supreme court decision. *Armendariz* v. *Foundation Health Psychcare Services, Inc.,* 6 P.3d 669 (2000). This court decision is not relevant to NASD 00–02 because the court's decision was directed to the validity of a predispute arbitration agreement involving certain employment matters, not the validity of the arbitration forum's fees (or the arbitration forum's procedural rules). In California, NASD–DR has limited the arbitration fees for employees in applicable cases involving employment disputes pursuant to this court decision, including those filed under the procedural injunctive relief rule. *See* note 12, *supra.*

[58] 15 U.S.C. 78*o*–3.

[59] 15 U.S.C. 78*o*–3(b)(6).

[60] 15 U.S.C. 78*o*–3(b)(5).

[61] 15 U.S.C. 78c(f).

result in any burden on competition not necessary or appropriate in furtherance of the Exchange Act. Therefore, the Commission finds that the proposal is consistent with section 15A(b)(9) of the Exchange Act.[62]

It Is Therefore Ordered, pursuant to section 19(b)(2) of the Act[63] that the proposed rule change (SR–NASD–00–02), as amended, be, and hereby is, approved.

For the Commission, by the Division of Market Regulation, pursuant to delegated authority.[64]

Margaret H. McFarland,

Deputy Secretary.

[FR Doc. 02–1105 Filed 1–15–02; 8:45 am]

BILLING CODE 8010–01–M

[62] 15 U.S.C. 78*o*–3(b)(9).

[63] 15 U.S.C. 78s(b)(2).

[64] 17 CFR 200.30–3(a)(12).

SECURITIES AND EXCHANGE COMMISSION

[Release No. 34–45258; File No. SR–NYSE–2002–02]

Self-Regulatory Organizations; Notice of Filing and Immediate Effectiveness of Proposed Rule Change by the New York Stock Exchange, Inc. Regarding Fees for Mandatory Participation in the Floor Member Continuing Education Program

January 9, 2002.

Pursuant to section 19(b)(1) of the Securities Exchange Act of 1934 (''Act''),[1] and Rule 19b–4 thereunder,[2] notice is hereby given that on January 4, 2002, the New York Stock Exchange, Inc. (''NYSE'' or ''Exchange'') filed with the Securities and Exchange Commission (''Commission'') the proposed rule change as described in Items I, II and III below, which Items have been prepared by the Exchange. The Commission is publishing this notice to solicit comments on the proposed rule change from interested persons.

I. Self-Regulatory Organization's Statement of the Terms of Substance of the Proposed Rule Change

The Exchange proposes to establish fees as of January 14, 2002 to be charged to members that are active on the floor of the Exchange who are required under NYSE Rule 103A (Specialist Stock Reallocation and Member Education and Performance) to participate in the Exchange's Floor Member Continuing Education Program on a semi-annual basis. The text of the proposed rule change is available at the NYSE and at the Commission.

II. Self-Regulatory Organization's Statement of the Purpose of, and Statutory Basis for, the Proposed Rule Change

In its filing with the Commission, the NYSE included statements concerning the purpose of and basis for its proposal and discussed any comments it received regarding the proposal. The text of these statements may be examined at the places specified in Item IV below. The Exchange has prepared summaries, set forth in sections A, B and C below, of the most significant aspects of such statements.

A. Self-Regulatory Organization's Statement of the Purpose of, and Statutory Basis for, the Proposed Rule Change

1. Purpose

NYSE Rule 103A requires members active on the floor of the Exchange to participate in the Exchange's Floor Member Continuing Education Program on a semi-annual basis and at such other times as may be necessary in connection with any particular matter or matters. Any floor member who fails to complete an educational program as scheduled must attend a make-up program no later than 120 days from the date of the originally scheduled program. Failure to do so will result in the member being precluded from entering on the floor until such time as the member satisfies the requirement to participate in the program.

A new interactive computer-based education program has been developed that will be implemented during January 2002. Participants will be required to be trained on market activities such as Opening, Intra-Day and the Closing. Specific categories include, but are not limited to: foreign stocks and parity, the opening of a volatile stock, NYSE Rule 127 (Block Positioning) and NYSE Rule 726 (Delivery of Options Disclosure Document and Prospectus) trades, CAP orders, error accounts, crossing sessions, MOC/LOC orders and informational imbalances. An industry committee has also been formed to guide the development of the content. Participation will continue to be required on a semi-annual basis, and a $100 registration fee will be charged for each session.

If a registrant fails to keep the scheduled appointment or does not complete the session, the registrant will be charged an additional $100 to re-register for another session.

The proposed fees are intended to help offset the costs of developing the program and infrastructure, administration, and ongoing development and maintenance.

2. Statutory Basis

The Exchange believes that the proposed rule is consistent with the provisions of section 6(b)(4) of the Act,[3] in that it provides for the equitable allocation of reasonable dues, fees and other charges among members, issuers and other persons using its services.

B. Self-Regulatory Organization's Statement on Burden on Competition

The Exchange does not believe that the proposed rule change will impose any burden on competition that is not necessary or appropriate in furtherance of the purposes of the Act.

C. Self-Regulatory Organization's Statement on Comments on the Proposed Rule Change Received From Members, Participants or Others

Comments were neither solicited nor received.

III. Date of Effectiveness of the Proposed Rule Change and Timing for Commission Action

The proposed rule change has become effective pursuant to Section 19(b)(3)(A)(ii) of the Act[4] and subparagraph (f)(2) of Rule 19b–4 thereunder,[5] because it involves a due, fee, or other charge. At any time within 60 days of the filing of the proposed rule change, the Commission may summarily abrogate such rule change if it appears to the Commission that such action is necessary or appropriate in the public interest, for the protection of investors, or otherwise in furtherance of the purposes of the Act.

VI. Solicitation of Comments

Interested persons are invited to submit written data, views, and arguments concerning the foregoing, including whether the proposal is consistent with the Act. Persons making written submissions should file six copies thereof with the Secretary, Securities and Exchange Commission, 450 Fifth Street, NW., Washington, DC 20549–0609. Copies of the submission, all subsequent amendments, all written statements with respect to the proposed rule change that are filed with the Commission, and all written communications relating to the proposed rule change between the Commission and any person, other than those that may be withheld from the public in accordance with the

[1] 15 U.S.C. 78s(b)(1).

[2] 17 CFR 240.19b–4.

[3] 15 U.S.C. 78f(b)(4).

[4] 15 U.S.C. 78s(b)(3)(A)(ii).

[5] 17 CFR 240.19b–4(f)(2).

provisions of 5 U.S.C. 552, will be available for inspection and copying in the Commission's Public Reference Room. Copies of such filing will also be available for inspection and copying at the principal office of the NYSE. All submissions should refer to file number SR–NYSE–2002–02 and should be submitted by February 6, 2002.

For the Commission, by the Division of Market Regulation, pursuant to delegated authority.[6]

Margaret H. McFarland,

Deputy Secretary.

[FR Doc. 02–1100 Filed 1–15–02; 8:45 am]

BILLING CODE 8010–01–M

SECURITIES AND EXCHANGE COMMISSION

[Release No. 34–45263; File No. SR–NYSE–2001–53]

Self-Regulatory Organizations; Notice of Filing of Proposed Rule Change and Amendment No. 1 Thereto by the New Stock Exchange, Inc. Amending Its Rules Regarding the Transmission of Proxy and Other Shareholder Communication Material and the Proxy Reimbursement Guidelines Set Forth In Those Rules, and Requesting Permanent Approval of the Amended Proxy Reimbursement Guidelines

January 9, 2002.

Pursuant to section 19(b)(1) of the Securities Exchange Act of 1934 (''Act'')[1] and Rule 19b–4 thereunder,[2] notice is hereby given that on December 21, 2001, the New York Stock Exchange, Inc. (''NYSE'' or ''Exchange'') filed with the Securities and Exchange Commission (''Commission'') the proposed rule change as described in Items I, II, and III below, which Items have been prepared by the Exchange. On January 9, 2002, the NYSE filed Amendment No. 1 to the proposed rule change.[3] The Commission is publishing this notice to solicit comments on the proposed rule change, as amended, from interested persons.

I. Self-Regulatory Organization's Statement of the Terms of Substance of the Proposed Rule Change

Subject to the guideline amendments noted below, the Exchange seeks permanent approval of the pilot program setting forth guidelines for the amounts that NYSE issuers should reimburse member organizations for the distribution of proxy materials and other issuer communications to security holders whose securities are held in street name. In addition, the Exchange proposes to amend the guidelines under the current pilot program by decreasing the basic mailing fee paid by ''Large Issuers'' (as defined below) by 5¢ (from 50¢ to 45¢) and by cutting in half the incentive fee payable by Large Issuers (from 50¢ to 25¢).

The text of the proposed rule change, as amended, is available upon request from the Office of the Secretary, the NYSE or the Commission.

II. Self-Regulatory Organization's Statement of the Purpose of, and Statutory Basis for, the Proposed Rule Change

In its filing with the Commission, the Exchange included statements concerning the purpose of and basis for the proposed rule change and discussed any comments it received on the proposed rule change. The text of these statements may be examined at the places specified in Item IV below. The Exchange has prepared summaries, set forth in sections A, B, and C below, of the most significant aspects of such statements.

A. Self-Regulatory Organization's Statement of the Purpose of, and Statutory Basis for, the Proposed Rule Change

1. Purpose

Exchange Rule 451 (''Transmission of Proxy Material'') and Exchange Rule 465 (''Transmission of Interim Reports and Other Material'') (collectively, the ''Rules'') currently provide for a pilot program pursuant to which the NYSE has established fee reimbursement guidelines (the ''Pilot Program''). Under the Pilot Program, the NYSE has established guidelines for the amounts that NYSE issuers should reimburse member organizations for the distribution of proxy materials and other issuer communications to security holders whose securities are held in street name (the ''Guidelines''). In this proposed rule change, as amended, the Exchange seeks permanent approval of the Pilot Program Guidelines. In addition, the Exchange proposes to amend certain reimbursement fees that the Guidelines establish. Those amendments seek to decrease the basic mailing fees paid by large issuers by 5¢ (from 50¢ to 45¢) and to cut in half (from 50¢ to 25¢) the incentive ''suppression'' fee that large issuers pay to member organizations that succeed in reducing the number of sets of materials that need to be distributed (such as by sending one set of materials to a household holding multiple positions in the issuer's securities).

A. Permanent Approval

Supplementary Material .90 (''Schedule of approved charges by member organizations in connection with proxy solicitations'') to Exchange Rule 451 applies the Guidelines to the transmission of proxy materials to shareholders. Supplementary material .20 (''Mailing charges by member organizations'') to Exchange Rule 465 applies them to the transmission of other materials to shareholders. In addition, Paragraph 402.10(A) of the NYSE's *Listed Company Manual* (''Charges for Initial Proxy and/or Annual Report Mailings'') includes the text of Supplementary Material .90 to Exchange Rule 451 and the Exchange proposes to conform Paragraph 402.10(A) to conform to the changes described below to Exchange Rule 451. The Commission initially approved the Pilot Program on March 14, 1997.[4] Pursuant to Commission extensions of its initial approval, the Pilot Program has remained in effect since then. Pursuant to the Commission's most recent extension, the Pilot Program is currently scheduled to expire on April 1, 2002.[5]

During this period, the NYSE has participated on the Proxy Voting Review Committee (the ''Committee''). The Committee is a private initiative that is designed to review the proxy process. It includes self-regulatory organizations and representatives of the securities industry, corporate issuers and institutional investors, as well as the largest provider of proxy intermediary services. The Committee has monitored the effects of the Guidelines on the market and has maintained an on-going dialogue among Committee representatives. In addition, the Exchange has had an independent accounting firm audit the Pilot Program.[6]

The Committee's experience with the Pilot Program has convinced it that the Guidelines have been instrumental in setting at fair and reasonable levels the costs that issuers incur in having member organizations and

---

[6] 17 CFR 200.30–3(a)(12).

[1] 15 U.S.C. 78s(b)(1).

[2] 17 CFR 240.19b–4.

[3] *See* letter from Darla C. Stuckey, Corporate, NYSE, to Sharon Lawson, Senior Special Counsel, Division of Market Regulation, Commission, dated January 7, 2002 (''Amendment No. 1''). In Amendment No. 1, the Exchange made some technical and clarifying corrections to the proposed rule change.

[4] *See* Securities Exchange Act Release No. 38406 (March 14, 1997), 62 FR 13922 (March 24, 1997) (File No. SR–NYSE–96–36).

[5] *See* Securities Exchange Act Release No. 44750 (August 29, 2001), 66 FR 46488 (September 5, 2001) (File No. SR–NYSE–2001–22).

[6] *See* Amendment No. 1, *supra* note 3.

intermediaries transmit proxy and other materials to security holders. For that reason, the Committee unanimously voted (with one abstention) to recommend that the NYSE seek permanent approval of the Guidelines, as modified by this proposed rule change, as amended, and the Exchange has determined that it is appropriate to do so.

B. Guideline Changes

In addition to seeking permanent approval of the Guidelines, the Committee has recommended certain amendments to the Guidelines. The Exchange supports those amendments, proposes to adopt them into its Rules and supports the Committee's rationale for the amendments, as set forth below. The proposed amendments are as follows:

(i) Reduce the suggested rate of reimbursement for initial mailings of each set of material (*i.e.,* proxy statement, form of proxy and annual report when mailed as a unit) from 50¢ to 40¢.

(ii) Increase the suggested per-nominee fee for intermediaries that coordinate the proxy and mailing activities of multiple nominees. That suggested fee is currently $20 per nominee. The increase would raise it (A) 10¢ per set of material required for ''Small Issuers'' (defined as issuers whose shares are held in fewer than 200,000 nominee accounts), or (B) 5¢ per set of material required for ''Large Issuers'' (defined as issuers whose shares are held in at least 200,000 nominee accounts).

(iii) Reduce from 50¢ to 25¢ the incentive fee for initial mailings of the materials of Large Issuers (again, issuers whose shares are held in at least 200,000 nominee accounts). As a result, the incentive fee for Large Issuers will decrease by 25¢ and the incentive fee for Small Issuers will remain at 50¢.

The Committee and the Exchange represent that the net effect of clauses (i) and (ii) is to decrease the effective mailing fee by 5¢ for Large Issuers, but not for Small Issuers. One intermediary projects that the combination of that decrease and the decrease in the incentive fee for Large Issuers will decrease the total fees that issuers pay to have materials distributed to shareholders by almost $11 million.[7]

The Guidelines currently subject Small Issuers and Large Issuers to the same rates. The Committee has designed the proposed revamped fee schedule to allocate more fairly the costs of distributing proxy and other material between Large Issuers and Small Issuers. The Committee recognizes that economies of scale create overall per-account cost savings for Large Issuers and that those savings justify lower fees for Large Issuers. The Committee determined that reducing the rates applicable to Large Issuers relative to the rates applicable to Small Issuers is fair, reasonable and appropriate.[8]

The Committee recognizes that a member organization typically spends less in transmitting material to the nominee account of a Large Issuer than in transmitting material to the nominee account of a Small Issuer. That is because economies of scale apply to many of the tasks of processing material for distribution and of collecting voting instructions. For instance, processing search dates and record dates, logging receipt of materials, coding proxies, reporting voting results and invoicing fees payable involve costs that are essentially fixed. As a result, the per-account cost for these tasks decreases in relation to the number of accounts in which the issuer's shares are held. That per-account cost is therefore lower with respect to a Large Issuer than with respect to a Small Issuer.

In addition, modern data processing and mailing techniques reduce the amount of human intervention involved in the process, driving down the actual per-account cost of handling mailings in large volume. The Committee believes that the actual cost incurred with respect to Large Issuers in handling mailings is lower than the reimbursable amount that results from adherence to the current Guidelines. On the other hand, the actual cost of handling mailings for Small Issuers far exceeds the fees set forth in the current guidelines.[9] The Committee believes that these factors justify reducing the incentive fee from 50¢ to 25¢ for Large Issuers, but not reducing the 50¢ fee for Small Issuers. They also justify the 5¢ difference in the per-set-of-material per-nominee fee for Large Issuers and Small Issuers.

In applying the proposed revamped fee schedules to the Guidelines, the Committee has had to establish a line of demarcation that separates Large Issuers from Small Issuers. It settled on requiring an issuer to have 200,000 nominee accounts in order to qualify as a Large Issuer. As a result, only the largest issuers, fewer than 200 overall, fall within that definition. However, beneficial owners' positions in shares of those Large Issuers account for approximately 50 percent of the number of positions that all beneficial owners maintain in the shares of all issuers. The Exchange has adopted the Committee's recommendations discussed above, including the recommendation that the 50 percent mark is an appropriate place at which to draw the line. The Exchange, in this proposed rule change, as amended, proposes to incorporate the Committee's recommendations into its Guidelines and Rules.

2. Statutory Basis

The Exchange believes the proposed rule change, as amended, is consistent with section 6(b) of the Act,[10] in general, and furthers the objectives of sections 6(b)(4)[11] and 6(b)(5)[12] of the Act, in particular. Section 6(b)(4) of the Act[13] provides that an exchange have rules that provide for the equitable allocation of reasonable dues, fees and other charges among its members and other persons using its facilities. Section 6(b)(5) of the Act[14] provides that an exchange have rules to prevent fraudulent and manipulative acts and practices, to promote just and equitable principles of trade, to foster cooperation and coordination with persons engaged in regulating, clearing, settling, processing information with respect to, and facilitating transactions in securities, to remove impediments to and perfect the mechanism of a free and open market and a national market system, and, in general, to protect investors and the public interest.

B. Self-Regulatory Organization's Statement on Burden on Competition

The Exchange believes that the proposed rule change does not impose any burden on competition that is not necessary or appropriate in the furtherance of the purposes of the Act.

[7] *See* letter to Richard A. Grasso, Chairman and Chief Executive Officer, NYSE, from Stephen P. Norman, Chairman, Committee, dated November 28, 2001 (the ''Committee Letter''). A copy of the Committee Letter is attached as Exhibit C to the Exchange's proposed rule change.

[8] The Committee voiced its support for the proposed fee changes in the Committee Letter. *See* Exhibit C to the Exchange's proposed rule change.

[9] Even taking into consideration increased costs associated with institutional shareholder requirements and peak season processing, both of which are associated more with Large Issuers than Small Issuers, the Committee nonetheless found that handling costs for Large Issuers are lower than for Small Issuers, due primarily to economies of scale.

The largest provider of proxy intermediary services presented information to the Committee that detailed the costs that issuers pay for registered proxy processing. That information indicated that the per-unit costs that Small Issuers pay are, on average, more than 10 times greater than the per-unit costs that Large Issuers pay.

[10] 15 U.S.C. 78f(b).

[11] 15 U.S.C. 78f(b)(4).

[12] 15 U.S.C. 78f(b)(5).

[13] 15 U.S.C. 78f(b)(4).

[14] 15 U.S.C. 78f(b)(5).

C. Self-Regulatory Organization's Statement on Comments on the Proposed Rule Change Received From Members, participants or Others

The NYSE has engaged in on-going dialogue regarding the proposed rule change and other aspects of the Pilot Program with Commission staff, as well as with the Committee. The proposed fee changes were developed and approved by the Committee. In the Committee Letter, the Committee asserts that the proposed fees appear reasonable in light of the service levels required and the overall costs associated with the elimination of duplicate mailings, that the proposed fees reflect the economies of scale of the Large Issuers and that the Guidelines should be made permanent.

In addition, the NYSE has received other comment letters on the proposed fee changes from the Securities Industry Association (''SIA''), the American Society of Corporate Secretaries (''ASCS'') and the Association of Publicly Traded Companies (''APTC'').[15] SIA, ASCS and APTC all endorse the proposed fee changes. APTC notes in its letter that the Pilot Program provided a $235 million reduction in costs in 2001 from mail suppressions and is projected to provide savings of more than twice that amount by 2005. APTC also posits that the large volumes and low incremental cost of transmitting proxy materials for Large Issuers justify their payment of lower rates than Small Issuers.

Several of the Commission releases approving changes to the Pilot Program included language encouraging interested parties to consider approaches that would foster competition in the proxy distribution service industry. The releases also suggested that market forces, rather than regulators, should determine reasonable rates for proxy distribution services.

The Exchange views the Guideline-setting process as an on-going matter. Even if the Commission grants permanent status to the Guidelines, the Exchange intends to continue to meet with the Committee to evaluate and tune the Guidelines and to consider possible approaches to broader reform of the proxy distribution system.

[15] *See* letter to Richard A. Grasso, Chairman and Chief Executive Officer, NYSE, from Donald D. Kittell, Executive Vice President, SIA, dated November 29, 2001 (the ''SIA Letter''); letter to James E. Buck, Senior Vice President and Secretary, NYSE, from Brian T. Borders, President, APTC, dated November 29, 2001 (the ''APTC Letter''). Those letters are included in Exhibit D to the Exchange's proposed rule change.

III. Date of Effectiveness of the Proposed Rule Change and Timing for Commission Action

Within 35 days of the date of publication of this notice in the **Federal Register** or within such longer period (i) as the Commission may designate up to 90 days of such date if it finds such longer period to be appropriate and publishes its reasons for so finding or (ii) as to which the Exchange consents, the Commission will:

(A) By order approve such proposed rule change, or

(B) institute proceedings to determine whether the proposed rule change should be disapproved.

IV. Solicitation of Comments

Interested persons are invited to submit written data, views and arguments concerning the foregoing, including whether the proposed rule change, as amended, is consistent with the Act. Persons making written submissions should file six copies thereof with the Secretary, Securities and Exchange Commission, 450 Fifth Street, NW., Washington, DC 20549–0609. Copies of the submission, all subsequent amendments, all written statements with respect to the proposed rule change that are filed with the Commission, and all written communications relating to the proposed rule change between the Commission and any person, other than those that may be withheld from the public in accordance with the provisions of 5 U.S.C. 552, will be available for inspection and copying in the Commission's Public Reference Room. Copies of such filing will also be available for inspection and copying at the principal office of the NYSE. All submissions should refer to File No. SR–NYSE–2001–53 and should be submitted by February 6, 2002.

For the Commission by the Division of Market Regulation, pursuant to delegated authority.[16]

Margaret H. McFarland,

Deputy Secretary.

[FR Doc. 02–1104 Filed 1–15–02; 8:45 am]

BILLING CODE 8010–01–M

[16] 17 CFR 200.30–2(a)(12).

SECURITIES AND EXCHANGE COMMISSION

[Release No. 34–45262; File No. SR–PCX–2001–47]

Self-Regulatory Organizations; Notice of Filing and Immediate Effectiveness of Proposed Rule Change, Amendment No. 1, and Amendment No. 2 Thereto by the Pacific Exchange, Inc. Establishing a New Exchange Fee Based on the Number of Order Cancellation Routed Through the Exchange's Member Firm Interface

January 9, 2002.

Pursuant to section 19(b)(1) of the Securities Exchange Act of 1934 (''Act'')[1] and Rule 19b–4[2] thereunder, notice is hereby given that on November 27, 2001, the Pacific Exchange, Inc. (''PCX'' or ''Exchange'') filed with the Securities and Exchange Commission (''SEC'' or ''Commission'') the proposed rule change as described in Items I, II, and III below, which Items have been prepared by the Exchange. On December 13, 2001, the PCX submitted Amendment No. 1 to the proposed rule change.[3] On December 26, 2001, the PCX submitted Amendment No. 2 to the proposed rule change.[4] The Commission is publishing this notice to solicit comments on the proposed rule change, as amended, from interested persons.

I. Self-Regulatory Organization's Statement of the Terms of Substance of the Proposed Rule Change

The PCX proposes to establish a new fee based upon the number of order cancellations that are routed through the MFI.

The text of the proposed rule change, as amended, is available at the Office of

[1] 15 U.S.C. 78s(b)(1).

[2] 17 CFR 240.19b–4.

[3] *See* letter from Cindy L. Sink, Senior Attorney, PCX, to Nancy J. Sanow, Assistant Director, Division of Market Regulation (''Division''), Commission, dated December 12, 2001 (''Amendment No. 1''). In Amendment No. 1, the PCX amended note 2 to the PCX Fee Schedule entitled ''Options: Trade-Related Charges'' to clarify that the fee will be assessed when the total number of orders an executing clearing member cancels through the PCX Member Firm Interface (''MFI'') in a particular month exceeds the total number of orders that member executes through the MFI in that same month.

[4] *See* letter from Cindy L. Sink, Senior Attorney, PCX, to Nancy J. Sanow, Assistant Director, Division, Commission, dated December 21, 2001 (''Amendment No. 2''). In Amendment No. 2, the PCX clarified the purpose of the proposed rule change. For purposes of calculating the 60-day period, within which the Commission may summarily abrogate the proposed rule change under section 19(b)(3)(C) of the Act, the Commission considers that period to commence on December 26, 2001, the date the PCX filed Amendment No. 2. *See* 15 U.S.C. 78s(b)(3)(C).

the Secretary, PCX and at the Commission.

II. Self-Regulatory Organization's Statement of the Purpose of, and Statutory Basis for, the Proposed Rule Change

In its filing with the Commission, the PCX included statements concerning the purpose of and basis for the proposed rule change, as amended, and discussed any comments it received on the proposed rule change. The text of these statements may be examined at the places specified in Item IV below. The Exchange has prepared summaries, set forth in sections A, B, and C below, of the most significant aspects of such statements.

A. Self-Regulatory Organization's Statement of the Purpose of, and Statutory Basis for, the Proposed Rule Change

1. Purpose

The Exchange is proposing to establish a fee to deal with various operational problems and costs resulting from the practice of immediately following orders routed through the Exchange's automated MFI with a cancel request. Since these orders frequently come in large numbers, components, of the MFI, such as the Floor Broker Hand Held Terminals (''HHTs''), can very quickly become backlogged, which increases Exchange costs and adversely impacts public customers, their clearing firms, and Lead Market Makers by making the execution of other customer orders less timely. A high volume of cancellations sent through the MFI to HHTs or to the Exchange's Limit Order Book also increases Exchange costs by requiring the Exchange to spend increased amounts on systems and other hardware to process increased order traffic flow.[5]

Under the proposed fee, the executing Clearing Member would be charged $1.00 for every order that it cancels through the MFI in any month where the total number of cancellations sent by the executing Clearing Member exceeds the total number of orders that same firm executed through the MFI in that same month. This fee will not apply to executing Clearing Members that cancel fewer than 500 orders through the MFI in a given month. The Exchange believes that the fee will help ease backlogs on the MFI and particularly HHTs.

[5] This sentence was clarified to reflect a telephone converation between Cindy L. Sink, Senior Attorney, PCX, and Gordon Fuller, Counsel to the Assistant Director and Frank N. Genco, Attorney, Division, Commission, (January 3, 2002).

2. Statutory Basis

The Exchange believes that the proposal is consistent with section 6(b) of the Act,[6] in general, and section 6(b)(4) of the Act,[7] in particular, in that it is designed to provide for the equitable allocation of reasonable dues, fees, and other charges among its members and issuers and other persons using its facilities.

B. Self-Regulatory Organization's Statement on Burden on Competition

The Exchange does not believe that the proposed rule change, as amended, will impose any burden on competition.

C. Self-Regulatory Organization's Statement on Comments on the Proposed Rule Change Received From Members, Participants, or Others

No written comments were solicited nor received.

III. Date of Effectiveness of the Proposed Rule Change and Timing for Commission Action

The foregoing proposed rule change, as amended, has become effective pursuant to section 19(b)(3)(A)(ii) of the Act[8] and subparagraph (f)(2) of Rule 19b–4[9] thereunder, because it establishes or changes a due, fee, or other charge.[10] At any time within 60 days of December 26, 2001, the Commission may summarily abrogate such proposed rule change, as amended, if it appears to the Commission that such action is necessary or appropriate in the public interest, for the protection of investors, or otherwise in furtherance of the purposes of the Act.[11]

IV. Solicitation of Comments

Interested persons are invited to submit written data, views, and arguments concerning the foregoing, including whether the proposed rule change, as amended, is consistent with the Act. Persons making written submissions should file six copies thereof with the Secretary, Securities and Exchange Commission, 450 Fifth Street, NW., Washington, DC 20549–0609. Copies of the submission, all subsequent amendments, all written statements with respect to the proposed rule change, as amended, that are filed with the Commission, and all written communications relating to the proposed rule change, as amended, between the Commission and any person, other than those that may be withheld from the public in accordance with the provisions of 5 U.S.C. 552, will be available for inspection and copying in the Commission's Public Reference Room. Copies of such filing will also be available for inspection and copying at the principal office of the PCX.

All submissions should refer to File No. SR–PCX–2001–47 and should be submitted by February 6, 2002.

For the Commission, by the Division of Market Regulation, pursuant to delegated authority.[12]

Margaret H. McFarland,

Deputy Secretary.

[FR Doc. 02–1101 Filed 1–15–02; 8:45 am]

BILLING CODE 8010–01–M

[6] 15 U.S.C. 78f(b).

[7] 15 U.S.C. 78f(b)(4).

[8] 15 U.S.C. 78s(b)(3)(A)(ii).

[9] 17 CFR 240.19b–4(f)(2).

[10] The Exchange's proposed rule change is substantially similar to a fee instituted by the Chicago Board Options Exchange, Inc., which became immediately effective on July 27, 2001, and a fee instituted by the American Stock Exchange LLC, which became immediately effective on November 27, 2001. *See* Securities Exchange Act Release Nos. 44607 (July 27, 2001), 66 FR 40757 (August 3, 2001), (Notice of Filing and Immediate Effectiveness, SR–CBOE–2001–40); and 45110 (November 27, 2001), 66 FR 63080 (December 4, 2001), (Notice of Filing and Immediate Effectiveness, SR–Amex–2001–90).

[11] *See* 15 U.S.C. 78(b)(3)(C).

[12] 17 CFR 200.30–3(a)(12).

SECURITIES AND EXCHANGE COMMISSION

[Release No. 34–45255; File No. SR–SCCP–00–01]

Self-Regulatory Organizations; Stock Clearing Corporation of Philadelphia; Order Approving a Proposed Rule Change Relating to the Eligibility of Holders of Equity Trading Permits Issued by the Philadelphia Stock Exchange, Inc. To Be Participants of the Stock Clearing Corporation of Philadelphia

January 9, 2002.

On January 12, 2000, the Stock Clearing Corporation of Philadelphia (''SCCP'') filed with the Securities and Exchange Commission (''Commission'') and on May 31, 2000, amended a proposed rule change (File No. SR–SCCP–00–01) pursuant to section 19(b)(1) of the Securities Exchange Act of 1934 (''Act'').[1] Notice of the proposal was published in the **Federal Register** on September 1, 2000.[2] No comment letters were received. For the reasons discussed below, the Commission is approving the proposed rule change.

I. Description

The rule change amends SCCP's rules to permit holders of Equity Trading Permits (''ETPs'') issued by the

[1] 15 U.S.C. 78s(b)(1).

[2] Securities Exchange Act Release No. 43210 (August 25, 2000), 64 FR 53259.

Philadelphia Stock Exchange, Inc. (''PHLX'') to be eligible to become SCCP participants. SCCP Rule 3 provides that, subject to certain conditions,[3] any person who is a broker-dealer registered under the Act and a member in good standing of PHLX is eligible to be a SCCP participant.[4] The rule change amends SCCP Rule 3 to permit holders of PHLX ETPs to be considered ''members'' of PHLX for purposes of SCCP's participant qualification requirements.[5] ETP holders would thus be eligible to apply to be participants in SCCP.

The rule change also makes a corresponding amendment to Article 2 of SCCP's Articles of Incorporation. Article 2 currently includes as one of SCCP's corporate purpose the carrying of securities ''for members, member firms and/or member corporation of the Philadelphia Stock Exchange. * * *'' The rule change amends Article 2 to add a statement that SCCP's Board of Directors may determine by rule the identity of PHLX ''members, member firms and/or member corporations.''

II. Discussion

PHLX has proposed the creation of ETPs in order to reduce the cost of access to the exchange's equity trading floor as well as to provide an opportunity to attract additional order flow and new business and services. All trades on the PHLX in equity securities are processed through SCCP and require a SCCP participant to be involved. ETP holders will not be required to be SCCP participants themselves. Like PHLX members, ETP holders may elect instead to enter into a correspondent arrangement with another SCCP participant whereby the SCCP participant assumes responsibility for the clearance and settlement of the ETP holder's trades. The herein approved amendments to SCCP Rule 3 and SCCP's Articles of Incorporation simply assure that those ETP holders wishing to become SCCP participants themselves will be treated by SCCP in he same fashion as SCCP participants who are PHLX members. In doing so, the amendments also provide a clear basis upon which the SCCP board of directors can determine by rule, as and when future circumstances may warrant, the identity of such ''members, member firms and/or member corporations.''

Section 17A(b)(3)(F) of the Act requires that the rules of a clearing agency be designed to promote the prompt and accurate clearance and settlement of securities transactions.[6] The Commission believes that the approval of SCCP's Rule 3 change and Article 2 amendment is consistent with this section because these changes allow holders of ETPs issued by the PHLX to be eligible to become SCCP participants just as PHLX members are. As a result, more broker-dealers will have access to and be able to utilize SCCP.

III. Conclusion

On the basis of the foregoing, the Commission finds that the proposal is consistent with the requirements of the Act and in particular with the requirements of section 17A of the Act and the rules and regulations thereunder.

It Is Therefore Ordered, pursuant to section 19(b)(2) of the Act, that the proposed rule change (File No. SR–SCCP–00–01) be and hereby is approved.[7]

For the Commission, by the Division of Market Regulation, pursuant to the delegated authority.

Margaret H. McFarland,

Deputy Secretary.

[FR Doc. 02–1102 Filed 1–15–02; 8:45 am]

BILLING CODE 8010–01–M

[3] SCCP approves applicants for participant status only upon a determination that the applicant meets certain standards of financial condition, operational capability, and character set forth in SCCP's rules. Each participant is required to make a contribution to the SCCP Participant's Fund and to comply with SCCP's By-laws and Rules as well as with a participant's agreement. ETP holders must apply for SCCP membership and will be subject to the same admission criteria as PHLX members.

[4] The Commission has approved two rule changes proposed by PHLX. PHLX 00–02 adds new Article Twenty-First to PHLX's Certificate of Incorporation which enables PHLX to issue ETPs. PHLX 00–03 implements PHLX Rule 23 which sets forth the terms and conditions of the ETPs. Under PHLX Rule 23, holders of ETPs generally have the same rights under PHLX rules as PHLX members without options privileges except that ETP holders do not have the right to vote. ETPs are not transferable and their holders are not entitled to any residual interest in PHLX assets upon a liquidation of PHLX. Holders of ETPs are generally subject to the same obligations as PHLX members, except with respect to certain fees. Securities Exchange Act Release No. 45254 (January 9, 2002).

[5] The amendment to SCCP Rule 3 states, ''For purposes of this Rule 3 as well as all provisions of the Corporation's Certificate of Incorporation, By-laws, rules, regulations, requirements, orders, directions and decisions adopted or made in accordance therewith, holders of Equity Trading Permits (''ETPs'') issued pursuant to PHLX Rule 23 shall be deemed to be members of PHLX, and holders of Regular ETPs issued pursuant to PHLX Rule 23 who transact business from a location on the PHLX's equity floor shall be deemed to be PHLX floor members.'' Off-Floor ETPs, the other class of ETPs, allows holders electronic and telephone access, but not physical access, to the Exchange floor. Accordingly, SCCP would treat ETP holders, regardless of class, just like PHLX members both in terms of SCCP participant qualification requirements and privileges of SCCP participant status.

[6] 15 U.S.C. 8q–1(b)(3)(F).

[7] 17 CFR 200.30–3(a)(12).

SECURITIES AND EXCHANGE COMMISSION

[Release No. 34–45265; File No. SR–SCCP–2001–06]

Self-Regulatory Organizations; Stock Clearing Corporation of Philadelphia; Order Approving a Proposed Rule Change to Increase the Margin Threshold for Margin Members in Certain Nasdaq National Market Securities

January 10, 2002.

On April 30, 2001, the Stock Clearing Corporation of Philadelphia (''SCCP'') filed with the Securities and Exchange Commission (''Commission'') a proposed rule change (File No. SR–SCCP–00–06) pursuant to section 19(b)(1) of the Securities Exchange Act of 1934 (''Act'').[1] Notice of the proposal was published in the **Federal Register** on July 26, 2001.[2] On July 26, 2001, SCCP amended the proposed rule change.[3] No comment letters were received. For the reasons discussed below, the Commission is approving the proposed rule change.

I. Description

SCCP Rule 9 provides in part that SCCP will provide margin accounts for margin members that clear and settle their transactions through SCCP's omnibus clearance and settlement account. SCCP provides margin for such accounts based on SCCP's Rule 9 and other relevant SCCP rules, by-laws, and procedures and Regulation T of the Board of Governors of the Federal Reserve System. Currently, margin members who are designated as specialists or alternate specialists in an exchange listed security have a margin financing threshold rate of 15 percent for positions in those securities held in their specialist accounts. Members holding positions for which they are not designated as specialist or alternative specialist have a non-specialist margin rate of 50 percent. Pursuant to Rule 9, SCCP may issue margin calls to any margin member when the margin requirement exceeds the account equity.

The rule change amends SCCP's providers to specify a margin financing threshold rate of 25 percent for members registered as specialists and alternate specialists in Nasdaq NM securities. It should be noted that the Philadelphia Stock Exchange, Inc. (''Phlx'') has recently reinstated its over the counter/

[1] 15 U.S.C. 78s(b)(1).

[2] Securities Exchange Act Release No. 44582 (July 20, 2001), 66 FR 39071.

[3] The amendment was technical in nature and did not require republication of the notice.

unlisted trading privileges (''OTC/UTP'') pilot program for trading activity during regular trading hours.[4] SCCP expects that some of its margin members will be registered in certain of the eligible Nasdaq NM securities once the Phlx begins trading Nasdaq NM securities again.

It also should be noted that no other aspects of the SCCP procedures respecting Rule 9 are being modified. The rule change establishes a margin financing threshold rate of 25 percent for margin members registered as specialists or alternative specialists in certain Nasdaq NM securities.

II. Discussion

Section 17A(b)(3)(F)[5] of the Act requires that the rules of a clearing agency be designed to assure the safeguarding of securities and funds which are in the custody or control of the clearing agency or for which the clearing agency is responsible. Once the Phlx begins trading Nasdaq NM securities again, it will be prudent for SCCP to require a higher margin financing threshold rate (25 percent) for Nasdaq NM securities than for exchange listed securities (15 percent).[6] Accordingly, the Commission finds that the higher margin financing threshold rate for Nasdaq NM securities should help SCCP meet its statutory safeguarding obligations.

III. Conclusion

On the basis of the foregoing, the Commission finds that the proposal is consistent with the requirements of the Act and in particular with the requirements of section 17A(b)(3)(F) of the Act and the rules and regulations thereunder.

It is therefore ordered, pursuant to Section 19(b)(2) of the Act, that the proposed rule change (File No. SR–SCCP–2001–06) be and hereby is approved.

For the Commission by the Division of Market Regulation, pursuant to delegated authority.[7]

Margaret H. McFarland,

Deputy Secretary.

[FR Doc. 02–1106 Filed 1–15–02; 8:45 am]

BILLING CODE 8010–01–M

[4] Securities Exchange Act Release No. 45182 (December 20, 2001), 66 FR 67609 (December 31, 2001) [File No. SR–Phlx–00–20]

[5] 15 U.S.C. 78q–1(b)(3)(F).

[6] SCCP recently reviewed volatility levels for the Nasdaq 100 index and Nasdaq Composite index as compared to the Dow Jones Industrial average and the NYSE Composite index indicated significantly higher volatility levels over 10 day, 20 day, 50 day, and 90 day time periods.

[7] 17 CFR 200.30–3(a)(12).

SMALL BUSINESS ADMINISTRATION

Data Collection Available for Public Comments and Recommendations

ACTION: Notice and request for comments.

SUMMARY: In accordance with the Paperwork Reduction Act of 1995, this notice announces the Small Business Administration's intentions to request approval on a new, and/or currently approved information collection.

DATES: Submit comments on or before March 18, 2002.

ADDRESSES: Send all comments regarding whether this information collection is necessary for the proper performance of the function of the agency, whether the burden estimates are accurate, and if there are ways to minimize the estimated burden and enhance the quality of the collection, to Carol Walker, Chief, Office of Civil Rights Compliance Small Business Administration, 409 3rd Street, SW., Suite 6400, Washington DC 20416

FOR FURTHER INFORMATION CONTACT: Carol Walker, Chief, Civil Rights Compliance (202) 205–7149 or Curtis B. Rich, Management Analyst, (202) 205–7030.

SUPPLEMENTARY INFORMATION:

Title: Notice to New Borrowers.

Form No: 793.

Description of Respondents: Companies are requested to keep records in order for SBA to determine the compliance status of recipient.

Annual Responses: 24,985.

Annual Burden: 5,767.

ADDRESSES: Send all comments regarding whether these information collections are necessary for the proper performance of the function of the agency, whether the burden estimates are accurate, and if there are ways to minimize the estimated burden and enhance the quality of the collections, to Sandra Johnston, Program Analyst, Office of Financial Assistance Small Business Administration, 409 3rd Street, SW., Suite 8300, Washington DC 20416.

FOR FURTHER INFORMATION CONTACT: Sandra Johnston, Program Analyst (202) 205–7528 or Curtis B. Rich, Management Analyst, (202) 205–7030.

Title: Statement of Personal History.

Form No: 1081.

Description of Respondents: Certified Development Companies.

Annual Responses: 300.

Annual Burden: 75.

Title: Servicing Agent Agreement.

Form No: 1506.

Description of Respondents: Certified Development Companies.

Annual Responses: 4,200.

Annual Burden: 4,200.

Jacqueline White,

Chief, Administrative Information Branch.

[FR Doc. 02–1133 Filed 1–15–02; 8:45 am]

BILLING CODE 8025–01–P

SMALL BUSINESS ADMINISTRATION

Public Federal Regulatory Enforcement Fairness Roundtable; Region IV Regulatory Fairness Board

The Small Business Administration Region IV Regulatory Fairness Board and the SBA Office of the National Ombudsman, will hold a Public Roundtable on Thursday, January 17, 2002 at 1 p.m. at Capital Plaza Holiday Inn, 405 Wilkinson Blvd., Frankfort, Kentucky 40601, to provide small business owners and representatives of trade associations with an opportunity to share information concerning the federal regulatory enforcement and compliance environment.

Anyone wishing to attend or to make an oral presentation must contact Jeri Grant in writing or by fax, in order to be put on the agenda. Jeri Grant, Kentucky District Office, U.S. Small Business Administration, Room 188, 600 Dr. Martin Luther King, Jr. Place, Louisville, KY 40202, Phone (502) 582–5971 ext. 224, fax (502) 582–5009, e-mail *jeri.grant@sba.gov.*

For more information see our web site at *http://www.sba.gov/ombudsman/events/dsp_roundtable.html.*

Steve Tupper,

Committee Management Officer.

[FR Doc. 02–1045 Filed 1–15–02; 8:45 am]

BILLING CODE 8025–01–P

SMALL BUSINESS ADMINISTRATION

Region V—Minnesota District Advisory Council Public Meeting

The Small Business Administration Region V Minnesota District Advisory Council, located in the geographical area of Minneapolis, Minnesota, will hold a public meeting at 11:30 a.m. central time on Friday, February 8, 2002, at Maria's Café, 1113 Franklin Avenue East, Minneapolis, MN 55404, to discuss such matters as may be presented by members, staff of the Small Business Administration, or others present.

Anyone wishing to make an oral presentation to the Board must contact Edward A. Daum, District Director, in writing by letter or fax no later than February 7, 2002, in order to be put on the agenda. Edward A. Daum, District

Director, U.S. Small Business Administration, 100 N. 6th Street, Suite 210–C, Minneapolis, MN 55403, (612) 370–2306 phone (612) 370–2303 fax.

Steve Tupper,

Committee Management Officer.

[FR Doc. 02–1046 Filed 1–15–02; 8:45 am]

BILLING CODE 8025–01–P

OFFICE OF THE UNITED STATES TRADE REPRESENTATIVE

Notice of Meeting of the Industry Sector Advisory Committee on Small and Minority Business (ISAC–14)

AGENCY: Office of the United States Trade Representative.

ACTION: Notice of an opened meeting.

SUMMARY: The Industry Sector Advisory Committee on Small and Minority Business (ISAC–14) will hold a meeting on January 28, 2002, from 9 a.m. to 3 p.m. The meeting will be opened to the public from 9 a.m. to 3 p.m.

DATES: The meeting is scheduled for January 28, 2002, unless otherwise notified.

ADDRESSES: The meeting will be held in Conference Room C, of the Minority Business Development Agency (MBDA), located at 26 Federal Plaza, New York, New York 10278.

FOR FURTHER INFORMATION CONTACT: Millie Sjoberg, Pam Wilbur or Kelly Parsons (principal contacts), at (202) 482–4792, Department of Commerce, 14th Street and Constitution Avenue, NW., Washington, DC 20230 or myself on (202) 395–6120.

SUPPLEMENTARY INFORMATION: During the opened portion of the meeting the agenda topics to be addressed will be:

- Discussion on the impact of the September 11th attacks on Small Business exporters, including presentations by officials from the Small Business Administration (SBA), MBDA, U.S. Customs, Federal Emergency Management Agency (FEMA), the New York City Mayor's office, the New York City Comptroller, the New York City public advocate, the New York City Fire Department, the New York City USFCS; and,
- Discussion on the upcoming APEC SME Ministerial.

Elizabeth A. Gianni,

Acting Assistant U.S. Trade Representative for Intergovernmental Affairs and Public Liaison.

[FR Doc. 02–1097 Filed 1–15–02; 8:45 am]

BILLING CODE 3190–01–M

DEPARTMENT OF TRANSPORTATION

Office of the Secretary

Aviation Proceedings, Agreements Filed During the Week Ending December 21, 2001

The following Agreements were filed with the Department of Transportation under the provisions of 49 U.S.C. sections 412 and 414. Answers may be filed within 21 days after the filing of the application.

Docket Number: OST–2001–11182.
Date Filed: December 17, 2001.
Parties: Members of the International Air Transport Association.
Subject:
PTC23 EUR–SEA 0129 dated 14 December 2001, Mail Vote 186—Resolution 010r.
TC23/TC123 Europe-South East Asia Special Passenger, Amending Resolution 010r r1.
PTC23 EUR–SEA 0130 dated 14 December 2001, Mail Vote 187—Resolution 002 r2–r26.
TC23/TC123 Europe-South East Asia Standard, Revalidation Resolution.
Report—PTC23 EUR–SEA 0128 dated 7 December 2001, TC23/TC123 Europe-South East Asia Policy Group Report.
Tables—PTC23 EUR–SEA Fares 0035, dated 14 December 2001, *Intended effective date:* 15 March 2002 and 1 April 2002.

Docket Number: OST–2001–11183.
Date Filed: December 17, 2001.
Parties: Members of the International Air Transport Association.
Subject:
PTC23 ME–TC3 0133 dated 18 December 2001, Mail Vote 189—Resolution 010t.
TC23/TC123 Middle East–TC3 Special Passenger, Amending Resolution, *Intended effective date:* 1 April 2002.

Docket Number: OST–2001–11186.
Date Filed: December 17, 2001.
Parties: Members of the International Air Transport Association.
Subject:
IATA telexes TE537/TE542/TE549, dated 7/10/14 December 2001, Mail Vote 188—Resolution 010.
TC23/TC123 Europe-Japan/Korea, Middle East–TC3, Africa–TC3 and TC123 North/Mid/South Atlantic, Special Passenger Amending Resolution from Japan, *Intended effective date:* 1 April 2002.

Docket Number: OST–2001–11203.
Date Filed: December 19, 2001.
Parties: Members of the International Air Transport Association.
Subject:
TC31 North and Central Pacific and TC31 Circle Pacific, PTC31 N&C/CIRC 0184 dated 16 November 2001 r1–r2, PTC31 N&C/CIRC 0185 dated 16 November 2001 r1–r2, PTC31 N&C/CIRC 0186 dated 16 November 2001 r10–r31, PTC31 N&C/CIRC 0187 dated 16 November 2001 r32–r46, PTC31 N&C/CIRC 0192 dated 7 December 2001.
(Technical Correction), Minutes—PTC31 N&C/CIRC 0193, dated 21 December 2001.
Tables—PTC31 N&C/CIRC Fares 0088, dated 7 December 2001.
PTC31 N&C/CIRC Fares 0089 dated 7 December 2001, PTC31 N&C/CIRC Fares 0090 dated 7 December 2001, *Intended effective date:* 1 April 2002.

Docket Number: OST–2001–11221.
Date Filed: December 20, 2001.
Parties: Members of the International Air Transport Association.
Subject:
TC31 North and Central Pacific, between Malaysia and USA.
PTC31 N&C/CIRC 0189, dated 16 November 2001, between Malaysia and USA r1–r13.
Minutes—PTC31 N&C/CIRC 0194, dated 21 December 2001.
Tables—PTC12 N&C/CIRC Fares 0092, dated 7 December 2001.
Intended effective date: 1 April 2002.

Docket Number: OST–2001–11222.
Date Filed: December 20, 2001.
Parties: Members of the International Air Transport Association.
Subject:
TC31 North and Central Pacific—TC3–Central America, South America.
PTC31 N&C/CIRC 0188 dated 16 November 2001.
TC3–Central America, South America Resolution r1–r18, Tables—PTC31 N&C/CIRC Fares 0091, dated 7 December 2001.
Intended effective date: 1 April 2002.

Dorothy Y. Beard,

Federal Register Liaison.

[FR Doc. 02–1155 Filed 1–15–02; 8:45 am]

BILLING CODE 4910–62–P

DEPARTMENT OF TRANSPORTATION

Office of the Secretary

Notice of Applications for Certificates of Public Convenience and Necessity and Foreign Air Carrier Permits Filed Under Subpart B (formerly Subpart Q) During the Week Ending December 21, 2001

The following Applications for Certificates of Public Convenience and

Necessity and Foreign Air Carrier Permits were filed under subpart B (formerly subpart Q) of the Department of Transportation's Procedural Regulations (See 14 CFR 301.201 *et. seq.*). The due date for Answers, Conforming Applications, or Motions to Modify Scope are set forth below for each application. Following the Answer period DOT may process the application by expedited procedures. Such procedures may consist of the adoption of a show-cause order, a tentative order, or in appropriate cases a final order without further proceedings.

Docket Number: OST–2001–11198.

Date Filed: December 18, 2001.

Due Date for Answers, Conforming Applications, or Motion to Modify Scope: January 8, 2002.

Description: Application of Caribbean Star Airlines, Inc., pursuant to 49 U.S.C. section 41102 and subpart B, requesting issuance of a certificate of public convenience and necessity to engage in scheduled interstate air transportation.

Docket Number: OST–2001–11206.

Date Filed: December 19, 2001.

Due Date for Answers, Conforming Applications, or Motion to Modify Scope: January 9, 2002.

Description: Application of Freedom Airlines, Inc., pursuant to 49 U.S.C. section 41102 and subpart B, requesting a certificate of public convenience and necessity to engage in scheduled interstate air transportation of persons, property and mail.

Docket Number: OST–2001–11230.

Date Filed: December 21, 2001.

Due Date for Answers, Conforming Applications, or Motion to Modify Scope: January 11, 2002.

Description: Application of Transcarga Intl. Airways, C.A., pursuant to 49 U.S.C. section 41302, 14 CFR parts 211 and 212 and subpart B, requesting issuance of a foreign air carrier permit to engage in charter (non-scheduled) foreign air transportation of property and mail between a point or points in Venezuela, on the one hand, and a point or points in the United States, to include: Miami, Florida; New York, New York; Houston, Texas; Aguadilla, Puerto Rico; and, San Juan, Puerto Rico.

Docket Number: OST–2001–11235.

Date Filed: December 21, 2001.

Due Date for Answers, Conforming Applications, or Motion to Modify Scope: January 11, 2002.

Description: Application of Ogden Flight Services Group, Inc., pursuant to 49 U.S.C. section 41102 and subpart B, requesting a certificate of public convenience and necessity to engage in foreign charter air transportation of persons, property and mail.

Dorothy Y. Beard,

Federal Register Liaison.

[FR Doc. 02–1156 Filed 1–15–02; 8:45 am]

BILLING CODE 4910–62–P

DEPARTMENT OF TRANSPORTATION

Coast Guard

[USCG–2001–11137]

Maritime Security

AGENCY: Coast Guard, DOT.

ACTION: Notice of availability; request for comment.

SUMMARY: The Coast Guard announces the availability of the maritime security public workshop agenda and a new comment period closing date. The public workshop is to discuss security procedures, programs, and capabilities within marine transportation systems. The focus of the workshop will be on identifying possible security measures, standards, and responses to threats and acts of crime and terrorism.

DATES: The public workshop will be held on January 28 through 30, 2002, from 9 a.m. to 5 p.m. We may end the workshop early, if we have covered all of the agenda topics and if the people attending have no further comments. In order to allow comments on the results of this workshop, comments and related material must reach the Docket Management Facility on or before March 15, 2002, rather than the February 14, 2002, date originally requested in the **Federal Register** on December 17, 2001 (66 FR 65020).

ADDRESSES: The workshop will be held at the following location: Grand Hyatt Washington at Washington Center, 1000 H Street, NW, Washington DC, 20001, Phone 202–582–1234.

You may submit your comments directly to the Docket Management Facility. To make sure that your comments and related material do not enter the docket [USCG–2001–11137] more than once, please submit them by only one of the following means:

(1) Electronically through the Web Site for the Docket Management System at *http://dms.dot.gov/.*

(2) By fax to the Docket Management Facility at 202–493–2251.

(3) By delivery to room PL–401 on the Plaza level of the Nassif Building, 400 Seventh Street SW., Washington, DC, between 9 a.m. and 5 p.m., Monday through Friday, except Federal holidays. The telephone number is 202–366–9329.

(4) By mail to the Docket Management Facility, (USCG–2001–11137), U.S. Department of Transportation, room PL–401, 400 Seventh Street SW., Washington, DC 20590–0001.

The Docket Management Facility maintains the public docket for this notice. Comments and material received from the public, as well as documents mentioned in this notice as being available in the docket, will become part of this docket and will be available for inspection or copying at room PL–401 on the Plaza level of the Nassif Building, 400 Seventh Street SW., Washington, DC, between 9 a.m. and 5 p.m., Monday through Friday, except Federal holidays. You may also find this notice in the docket on the Internet at *http://dms.dot.gov/.* Comments in the docket are available to the public for inspection and further comment, including proprietary information if submitted.

FOR FURTHER INFORMATION CONTACT: For information concerning this notice or the public workshop, write or call CDR Sue Englebert, at the Administrative and Coordination Division (G–M–1), *senglebert@comdt.uscg.mil,* or at 202–267–2388. If you contacted CDR Rand prior to January 7, 2002 to request a presentation time during the workshop, you will be contacted by January 23, 2002 with your scheduled presentation time and location. All presentation times have been filled therefore; additional requests are no longer accepted. If you have questions on viewing or submitting material to the docket, call Dorothy Beard, Chief, Dockets, Department of Transportation, at 202–366–5149.

SUPPLEMENTARY INFORMATION:

Request for Comments

We encourage you to participate in this workshop by submitting comments and related material. If you do so, please include your name and address, identify the docket number [USCG–2001–11137] and give the reason for each comment. You may submit your comments and material electronically, by fax, by delivery, or by mail to the Docket Management Facility at the address under **ADDRESSES**; but please submit your comments and material by only one means. If you submit them by mail or delivery, submit them in an unbound format, no larger than 8½ by 11 inches, suitable for copying and electronic filing. If you submit them by mail and would like to know that they reached the Facility, please enclose a stamped, self-addressed postcard or envelope. We will consider all comments and material received during the comment period.

Background and Purpose

For the reasons discussed in a notice of workshop, published in the **Federal Register** on December 17, 2001 (66 FR 65020), the Coast Guard will conduct a public workshop to assess existing marine transportation systems (MTS) security standards and measures and to gather ideas on possible improvements. We request workshop attendees to provide information about all Federal, State, and local government laws, procedures, regulations, and standards that are either functioning or that are planned. We will provide copies of international standards and Coast Guard regulations concerning the security of MTS. We also request industry to provide any current and planned standards and procedures covering the security of vessels and facilities.

The prior notice outlined general topics that will be focused on during the workshop, though it did not contain a specific agenda. Workshop attendees will be asked to divide into four workgroups to discuss the physical security and operational measures for facilities, vessels, and ports, as well as identification or credentialing measures that could be used to control access to facilities, vessels, or sensitive areas. Each workgroup's goal will be to develop criteria, measures to meet such criteria, and possible security performance standards for the criteria within their area of concentration. On Tuesday afternoon, January 29, 2002 the workgroups will summarize the results of their discussions in a brief presentation. Attendees will be provided an opportunity to comment on the impact, cost, and estimated value of the criteria, measures, and standards developed during this workshop. The workshop presentations will be included in the docket by February 4, 2002. The final workshop report will be placed in the docket by February 28, 2002. Comments on the workshop presentations will be accepted until March 15, 2002 as opposed to February 14, 2002, and should be sent to the Docket Management Facility at the address under **ADDRESSES**.

The following is the agenda for the public workshop, and is subject to change:

Agenda

Monday: January 28, 2002

8:30 a.m.: Sign-in.

9 a.m.: Introduction and overview.

10:15–11:30 a.m.: Morning discussion with breakout sessions to review current criteria, introduce criteria attendees bring, and develop criteria for the following:

(1) Physical security and operational measures—Facilities

(2) Physical security and operational measures—Vessels

(3) Physical security and operational measures—Ports

(4) Access Control—Credentials

11:30 a.m.–1 p.m.: Lunch break.

1–3:30 p.m.: Afternoon discussion with breakout sessions in the same workgroups as above to develop a list of possible measures to meet the criteria.

4–5 p.m.: Public presentations. (A program for these presentations will be available at the workshop.)

Tuesday: January 29, 2002

8:30 a.m.: Sign-in.

9–11:30 a.m.: Morning discussion with breakout sessions in the same workgroups as above to develop performance standards that could be used to evaluate the physical security and operational measure criteria.

11:30–1 p.m.: Lunch break.

1–3 p.m.: Workgroups present summations of their breakout sessions.

3–4 p.m.: Open discussion of the information presented by each workgroup.

4–5 p.m.: Public presentations. (A program for these presentations will be available at the workshop.)

Wednesday: January 30, 2002

9–11 a.m.: Opportunity for comment and further discussion for workshop attendees.

Dated: January 11, 2002.

Joseph J. Angelo,

Director of Standards, Marine Safety and Environmental Protection.

[FR Doc. 02–1184 Filed 1–11–02; 4:07 pm]

BILLING CODE 4910–15–U

DEPARTMENT OF TRANSPORTATION

Federal Aviation Administration

[Summary Notice No. PE–2001–95]

Petitions for Exemption; Summary of Petitions Received

AGENCY: Federal Aviation Administration (FAA), DOT.

ACTION: Notice of petitions for exemption received.

SUMMARY: Pursuant to FAA's rulemaking provisions governing the application, processing, and disposition of petitions for exemption part 11 of Title 14, Code of Federal Regulations (14 CFR), this notice contains a summary of certain petitions seeking relief from specified requirements of 14 CFR. The purpose of this notice is to improve the public's awareness of, and participation in, this aspect of FAA's regulatory activities. Neither publication of this notice nor the inclusion or omission of information in the summary is intended to affect the legal status of any petition or its final disposition.

DATES: Comments on petitions received must identify the petition docket number involved and must be received on or before February 5, 2002.

ADDRESSES: Send comments on any petition to the Docket Management System, U.S. Department of Transportation, Room Plaza 401, 400 Seventh Street, SW., Washington, DC 20590–0001. You must identify the docket number FAA–2000–XXXX at the beginning of your comments. If you wish to receive confirmation that FAA received your comments, include a self-addressed, stamped postcard.

You may also submit comments through the Internet to *http://dms.dot.gov.* You may review the public docket containing the petition, any comments received, and any final disposition in person in the Dockets Office between 9 a.m. and 5 p.m., Monday through Friday, except Federal holidays. The Dockets Office (telephone 1–800–647–5527) is on the plaza level of the NASSIF Building at the Department of Transportation at the above address. Also, you may review public dockets on the Internet at *http://dms.dot.gov.*

FOR FURTHER INFORMATION CONTACT: Forest Rawls (202) 267–8033, Sandy Buchanan-Sumter (202) 267–7271, or Vanessa Wilkins (202) 267–8029, Office of Rulemaking (ARM–1), Federal Aviation Administration, 800 Independence Avenue, SW., Washington, DC 20591.

This notice is published pursuant to 14 CFR 11.85 and 11.91.

Issued in Washington, DC, on January 11, 2002.

Donald P. Byrne,

Assistant Chief Counsel for Regulations.

Petitions for Exemption

Docket No.: FAA–2001–10442.

Petitioner: Era Aviation, Inc.

Section of 14 CFR Affected: 14 CFR 119.71.

Description of Relief Sought: To allow Era to employ a captain as a chief pilot while he is pursuing medical requalification for the position.

Docket No.: FAA–2001–10622.

Petitioner: Papillon Grand Canyon Helicopters.

Section of 14 CFR Affected: 14 CFR 135.265(d).

Description of Relief Sought: To allow PGCH to engage flight crewmembers on

a seven days on, seven days off work rotation schedule.

Docket No.: FAA–2001–11150.

Petitioner: F.S. Air Service, Inc.

Section of 14 CFR Affected: 14 CFR 25.857(b)(3).

Description of Relief Sought: To allow FSAS to configure the CASA C–212 CC and CD series airplane in a passenger/cargo configuration and be exempt from the requirements of 14 CFR 25.857(b)(3) for a ''separate approved smoke detector or fire detector system to give warning at the pilot or flight engineer station.''

[FR Doc. 02–1160 Filed 1–15–02; 8:45 am]

BILLING CODE 4910–13–M

DEPARTMENT OF TRANSPORTATION

Federal Aviation Administration

[Summary Notice No. PE–2001–96]

Petitions for Exemption; Summary of Dispositions of Petitions Issued

AGENCY: Federal Aviation Administration (FAA), DOT.

ACTION: Notice of Dispositions of prior petitions.

SUMMARY: Pursuant to FAA's rulemaking provisions governing the application, processing, and disposition of petitions for exemption part 11 of Title 14, Code of Federal Regulations (14 CFR), this notice contains a summary of dispositions of certain petitions previously received. The purpose of this notice is to improve the public's awareness of, and participation in, this aspect of FAA's regulatory activities. Neither publication of this notice nor the inclusion or omission of information in the summary is intended to affect the legal status of any petition or its final disposition.

FOR FURTHER INFORMATION CONTACT: Forest Rawls (202) 267–8033, Sandy Buchanan-Sumter (202) 267–7271, or Vanessa Wilkins (202) 267–8029, Office of Rulemaking (ARM–1), Federal Aviation Administration, 800 Independence Avenue, SW., Washington, DC 20591.

This notice is published pursuant to 14 CFR 11.85 and 11.91.

Issued in Washington, DC., on January 11, 2002.

Donald P. Byrne,

Assistant Chief Counsel for Regulations.

Dispositions of Petitions

Docket No.: FAA–2001–11089 (previously Docket No. 28660).

Petitioner: Collings Foundation.

Section of 14 CFR Affected: 14 CFR 91.315, 91.319(a), 119.5(g), and 119.21(a).

Description of Relief Sought/Disposition: To permit Collings to operate its Boeing B–17 aircraft, which is certificated in the limited category, for the purpose of carrying passengers on local flights for compensation or hire. *Grant, 12/13/2001, Exemption No. 6540D*

Docket No.: FAA–2001–10831.

Petitioner: Pomona Valley Pilots Association.

Section of 14 CFR Affected: 14 CFR 135.251, 135.255, 135.353, and appendixes I and J to part 121.

Description of Relief Sought/Disposition: To permit PVPA to conduct local sightseeing flights at Cable Airport, Upland, California, during January 2002, for compensation or hire, without complying with certain anti-drug and alcohol misuse prevention requirements of part 135. *Grant, 12/11/2001, Exemption No. 7682*

Docket No.: FAA–2001–11081.

Petitioner: Merlin Airways.

Section of 14 CFR Affected: 14 CFR 135.143(c)(2).

Description of Relief Sought/Disposition: To permit Merlin to operate certain aircraft under part 135 without a TSO–C112 (Mode S) transponder installed in the aircraft. *Grant, 12/11/2001, Exemption No. 7681*

Docket No. 30155.

Petitioner: University of Oklahoma Department of Aviation.

Section of 14 CFR Affected: 14 CFR 141.36(b)(2)(i), (c)(3)(i), (d)(1), and (d)(2)(i).

Description of Relief Sought/Disposition: To permit ODA to use an assistant chief flight instructor (1) who has not had at least 1 year of flight instructor training experience for a course of training leading to the issuance of a recreational or private pilot certificate or rating, (2) who has not had at least 1 year of instrument flight instructor training experience for a course of training leading to the issuance of an instrument rating or a certification with instrument privileges, and (3) who has not had at least 1,000 hours as pilot in command and 1½ years of flight instructor training experience for a course of training leading to the issuance of other than a recreational or private pilot certificate or rating, or an instrument rating or a certificate with instrument privileges, *Denial, 12/07/2001, Exemption No. 7683.*

Docket No.: FAA–2001–11129.

Petitioner: Heartland Aviation, Inc.

Section of 14 CFR Affected: 14 CFR 135.143(c)(2).

Description of Relief Sought/Disposition: To permit Heartland to operate certain aircraft under part 135 without a TSO–C112 (Mode S) transponder installed in the aircraft. *Grant, 12/14/2001, Exemption No. 7684*

Docket No.: FAA–2001–11050.

Petitioner: Big Sky Transportation dba Big Sky Airlines.

Section of 14 CFR Affected: 14 CFR 135.143(c)(2).

Description of Relief Sought/Disposition: To permit BSA to operate certain aircraft under part 135 without a TSO–C112 (Mode S) transponder installed in the aircraft. *Grant, 12/19/2001, Exemption No. 7685*

[FR Doc. 02–1161 Filed 1–15–02; 8:45 am]

BILLING CODE 4910–13–M

DEPARTMENT OF TRANSPORTATION

Federal Aviation Administration

[Summary Notice No. PE–2001–97]

Petitions for Exemption; Summary of Dispositions of Petitions Issued

AGENCY: Federal Aviation Administration (FAA), DOT.

ACTION: Notice of Dispositions of prior petitions.

SUMMARY: Pursuant to FAA's rulemaking provisions governing the application, processing, and disposition of petitions for exemption part 11 of Title 14, Code of Federal Regulations (14 CFR), this notice contains a summary of dispositions of certain pertitions previously received. The purpose of this notice is to improve the public's awareness of, and participation in, this aspect of FAA's regulatory activities. Neither publication of this notice nor the inclusion or omission of information in the summary is intended to affect the legal status of any petition or its final disposition.

FOR FURTHER INFORMATION CONTACT: Forest Rawls (202) 267–8033, Sandy Buchanan-Sumter (202) 267–7271, or Vanessa Wilkins (202) 267–8029, Office of Rulemaking (ARM–1), Federal Aviation Administration, 800 Independence Avenue, SW, Washington, DC 20591.

This notice is published pursuant to 14 CFR 11.85 and 11.91.

Dated: Issued in Washington, DC, on January 11, 2002.

Donald P. Byrne,

Assistant Chief Counsel for Regulations.

Dispositions of Petitions

Docket No.: FAA–2001–10004.

Petitioner: America West Airlines, Inc.

Section of 14 CFR Affected: 14 CFR 93.123.

Description of Relief Sought/ Disposition: To permit America West to operate three flights at Ronald Reagan Washington National Airport, *Grant, 12/10/2001, Exemption No. 5133J.*

Docket No.: FAA–2001–11054.

Petitioner: SC Aviation, Inc.

Section of 14 CFR Affected: 14 CFR 135.143(c)(2).

Description of Relief Sought/ Disposition: To permit SCA to operate certain aircraft under part 135 without TSO–C112 (Mode S) transponder installed in the aircraft. *Grant, 12/05/2001, Exemption No. 7673.*

Docket No.: FAA–2001–11059.

Petitioner: Mulchatna Air Service.

Section of 14 CFR Affected: 14 CFR 135.143(c)(2).

Description of Relief Sought/ Disposition: To permit MAS to operate certain aircraft under part 135 without a TSO–C112 (Mode S) transponder installed in the aircraft. *Grant, 12/05/2001, Exemption No. 7674.*

Docket No.: FAA–2000–8091.

Petitioner: Mr. Larry G. Munro.

Section of 14 CFR Affected: 14 CFR 61.3(j)(1).

Description of Relief Sought/ Disposition: To permit Mr. Munro to act as a pilot in certain international operations after reaching his 60th birthday. *Denial, 11/27/2001, Exemption No. 7669.*

[FR Doc. 02–1162 Filed 1–15–02; 8:45 am]

BILLING CODE 4910–13–M

DEPARTMENT OF TRANSPORTATION

Federal Highway Administration

Federal Transit Administration

Model Deployment of a Regional, Multi-Modal 511 Traveler Information System; Request for Participation

AGENCY: Federal Highway Administration (FHWA), Federal Transit Administration (FTA), DOT.

ACTION: Notice; request for participation.

SUMMARY: The Federal Highway Administration (FHWA) and the Federal Transit Administration (FTA) are seeking applications from public agencies that are currently deploying, or operating, a telephone system that delivers traveler information services so that those agencies may enhance their system to provide a high quality 511 service. This effort will provide for the enhancements to an existing telephone traveler information service, which has converted to the nationally available three-digit telephone number, 511, or will soon convert to 511. The purpose of this model deployment is to establish and document an innovative example of a 511 system that advances content quality and user interfaces. Applicants in response to this notice are encouraged to demonstrate their readiness to develop and implement a state-of-the-art 511 traveler information service and to articulate the adequacy of their proposed approach related to geographic areas, institutional coordination, and information to be provided.

DATES: Applications must be received at the office designated below on or before 4 p.m. on March 18, 2002.

ADDRESSES: Applications should be submitted to the U.S. Department of Transportation, Intelligent Transportation Systems (ITS) Joint Program Office (JPO), 511 Model Deployment, 400 Seventh St., SW., Room 3416, HOIT–1, Washington, DC 20590–0001.

FOR FURTHER INFORMATION CONTACT: For technical questions or concerns, please contact Mr. Robert Rupert, FHWA Office of Travel Management (HOTM–1), (202) 366–2194; Mr. Ron Boenau, FTA Advanced Public Transportation Systems Division (TRI–11), (202) 366–4995; or Mr. James Pol, FHWA Intelligent Transportation Systems (ITS) Joint Program Office (HOIT–1), (202) 366–4374. For legal questions or concerns please contact Ms. Gloria Hardiman-Tobin, FHWA Office of Chief Counsel (HCC–40), (202) 366–0780; or Ms. Linda Sorkin, FTA Office of Chief Counsel (HCC–20), (202) 366–1936; Department of Transportation, 400 Seventh Street, SW., Washington, D.C. 20590–0001. Office hours are from 8 a.m. to 4:30 p.m., e.t., Monday through Friday, except Federal holidays.

SUPPLEMENTARY INFORMATION:

Electronic Access

An electronic copy of this document may be downloaded using a modem and suitable communications software from the Government Printing Office's Electronic Bulletin Board Service at (202) 512–1661. Internet users may reach the Office of the Federal Register's home page at *http://www.nara.gov/fedreg* and the Government Printing Office's web page at *http://www.access.gpo.gov/nara.*

The document may also be viewed at the U.S. DOT's ITS home page at *http://www.its.dot.gov.*

Background

On July 21, 2000, the Federal Communications Commission assigned 511 as the nationwide traveler information telephone number and granted responsibility for it to government transportation agencies. The nationwide three-digit number utilizes and significantly advances the intelligent transportation infrastructure already in place to assist some States and cities in providing traveler information. Data obtained from 511 traveler information services will provide current information about bad weather, construction, or traffic jams that cause delays for businesses and the general public, as well as information about the status of transit buses, ferries, light rail, and other public transportation in local communities. In addition, by providing information that will direct drivers away from congestion and hazardous conditions, better access will be available for emergency vehicles responding to incidents.

This model deployment seeks to demonstrate the potential of 511 services to bring together various and disparate data, and provide useful information to travelers and potential travelers through a state-of-the-art telephone interface. The selected application (or applications) will demonstrate an understanding of the project objectives and will describe an approach that can be realistically accomplished within the schedule and funding constraints. The selected application will represent a location that presents a rich environment for generating a demand for traveler information. This environment will include recurring traffic congestion, on-going roadway construction impacting regional travel, variable weather conditions that impact travel, the availability of multiple modes of travel, and coordination with public safety agencies in a regional incident management program.

The timing of this model deployment has been planned by the U.S. DOT to take advantage of several on-going efforts by both the American Association of State Highway Transportation Officials (AASHTO) and the U.S. DOT. These efforts are at various stages of completion at the time of the release of this request for participation (RFP). It is the goal of the U.S. DOT that this model deployment illustrates how the innovative application of technologies can create a highly effective 511 service that sets a standard for high quality telephone traveler information. Some on-going research activities are likely to yield

products that will aid in the advancement of the selected agency's 511 system. These on-going research efforts include the following activities:

(a) 511 Early Adopters Evaluations—Six areas of the country have been identified as early adopters of 511. These six areas are working with an independent evaluation team contracted by the FHWA to glean institutional and technical issues surrounding the redirection of existing traveler information phone numbers to 511. This is an on-going activity with reports available on the U.S. DOT 511 web page (*http://www.its.dot.gov/511/511.htm*). The six early adopters of 511 include metropolitan Cincinnati, Ohio (including Covington, Kentucky); San Francisco, California; Arizona (Statewide); Minnesota (Statewide); Utah (Statewide); and Detroit, Michigan.

(b) 511 Deployment Assistance and Coordination Program—The AASHTO is leading the 511 Deployment Coalition to develop policy and technical materials that will provide guidance to States and locations as they implement 511. Guidelines for the information content, service consistency, and quality of service will be available in the spring of 2002. More information on the guidelines can be obtained through *http://www.itsa.org/511.html*.

(c) Testing of XML conversion of the Society of Automotive Engineers (SAE) Advanced Traveler Information Systems (ATIS) Message Sets—The FHWA is currently testing the eXtensible Mark-up Language (XML) conversion of the SAE ATIS Message Sets through the implementation of a multi-jurisdictional traveler information service. The draft results of this test will be available by the end of 2001.[1]

(d) ATIS Data Fusion—The FHWA is beginning to develop guidelines for combining, or fusing, data from a variety of sources to produce traveler information. This effort focuses on examining the different levels of quality that can be achieved according to a set of operating scenarios. Draft data fusion guidelines will be available in early 2002, and will be retrievable through the U.S. DOT Web site at *http://www.its.dot.gov*.

Objectives and Scope of the 511 Model Deployment

The objective of the 511 model deployment is to ''push the envelope'' of traveler information quality production and dissemination, along with an innovative user interface that promotes ease of use without compromising the user's expectation for personalized information. The resulting deployment is expected to remain in operation following the end of the model deployment evaluation. The period of performance of the 511 model deployment is expected to be 12 months from the effective date of the partnership agreement.

The scope of this model deployment includes addressing the institutional coordination that is necessary to implement an effective, sophisticated 511 service. The agency lead for the project team to which this model deployment is awarded (hereafter referred to as ''lead agency'') will assess the extent of integration that is currently available among the key stakeholder agencies (highway agencies, transit organizations and public safety agencies). The lead agency will secure agreements from each stakeholder to provide their content to the 511 system, and forge agreements that enable the transmission of information with the greatest frequency possible to provide current information. The lead agency will ensure that all the information elements that will be received from the stakeholders, including frequency of transmission of information, are documented. The lead agency will develop appropriate message sets to convey each of the stakeholders' information to a consolidation point. The message sets shall take full advantage of the Society of Automotive Engineers (SAE) standard message sets for ATIS (standard SAE J2354).[2] The lead agency will also consider the XML translation of the SAE Message Sets to simplify transmission via the Internet to any number of media outlets. Other viable solutions for exchanging information among centers will be considered.

The lead agency will describe the operational concept for the 511 service that articulates the roles and responsibilities for each of the stakeholders in providing content for the innovative 511. This operational concept will fully describe how the project team will seek innovative methods to deliver telephone-based traveler information. The lead agency will also distinguish how the information among its stakeholders will be conveyed according to geographical context. The purpose of developing an operational concept is to guide the lead agency, the stakeholder agencies, and the project participants in an understanding of what their levels of effort will be in sustaining the innovative 511 system. In addition, the operational concept will aid in the incorporation of new functionalities as technology and customer demands evolve.

Two elements of the innovative 511 service should be highlighted:

(1) The project team to which this 511 model deployment is awarded (hereafter referred to as ''project team'') will perform data fusion of all stakeholder content. Effective data fusion will enable the 511 system to provide information to callers automatically on a route segment or corridor basis, with no direct contact necessary between callers and human operators. At a minimum, the content shall include: current traffic conditions; major service disruptions for public transportation properties; current information on active construction and maintenance projects along route segments that may affect traffic flow or restrict lanes; unplanned events, major incidents, or congestion that shut down or significantly restrict traffic for an extended period; transportation-related information associated with significant special events (fairs, sporting events, etc.); and abnormal weather or road surface conditions that could affect travel along the route segment. The project team will describe, in the operational concept, how the innovative 511 system will affect their existing methods of data fusion.

(2) The design of the user interface must allow callers to locate the content they desire quickly and efficiently. User interfaces must be consistent in appearance, but may vary in content according to the origin of the phone call, *i.e.*, whether the caller is mobile or landline based. The user interface must take advantage of proven voice-recognition, voice response, and synthesized speech technologies. ''Natural speech'' techniques are desired. Keypad entry interfaces alone will not be considered innovative technology for this 511 model deployment. The user interface should provide the most convenient method of information retrieval possible. Keypad entry interfaces rely upon extensive information trees which extends the user's retrieval time. The following top-level commands should be used when a system has the relevant information available: ''Transit Information,'' ''Highway Information,'' ''Airport Information,'' ''Rail Station Information,'' and ''Ferry Information.''

Upon the completion of the operational concept, the ITS Joint Program Office (ITS JPO) shall have the opportunity to review the progress of

[1] For more information, visit *http://www.mitretek.org/its/TripInfo/atis.html*

[2] More information on the SAE ATIS Message Sets can be obtained through *http://www.its-standards.net/Documents/J2354.pdf*

the project and determine the likelihood of a successful completion of the 511 model deployment. Upon completion of the review, the ITS JPO will determine if funding will be made available to the selected model deployment location for the completion of the innovative 511 service.

The project team will implement the 511 multi-modal, regional system and demonstrate that the system functions as described in the operational concept and as designed. The project team will ensure monitoring of the operational status of the 511 system, and that necessary adjustments are made. The project team will demonstrate that the 511 system has the stability criteria developed jointly between the U.S. DOT and the project team during the development of the operational concept. The project team will operate the stable 511 system in support of an evaluation for a period of time as jointly developed and agreed to during the development of the operational concept. The project team will provide an appropriate level of ongoing support to achieve completion of all deployment and testing tasks as described in the operational concept.

The project team will synthesize and present evaluation findings as they relate to the objectives of the model deployment. The project team will document the 511 system design, and synthesize the technical and institutional issues documented in previous tasks. The project team will submit a final report to the ITS JPO that includes the above information and describes the project and its findings.

Funding

The total amount of Federal funding available for this effort is estimated at $1,100,000. The instrument to provide funding, on a cost reimbursable basis, will be an ITS partnership agreement between the FHWA and a public organization. Multiple partnership agreements are anticipated. Federal funding authority is derived from § 5001(a)(5) of the Transportation Equity Act for the 21st Century (TEA–21), Public Law 105–178, 112 Stat. 107, 419 (1998). Actual award of funds will be subject to funding availability.

Matching Share

There is a statutorily required (refer to § 5001(b) and § 5207(d) of TEA–21) minimum twenty percent matching share that must be from non-federally derived funding sources, and must consist of either cash, substantial equipment contributions that are wholly utilized as an integral part of the project, or personnel services dedicated full-time to the 511 model deployment for a substantial period, as long as such personnel are not otherwise supported with Federal funds. The non-federally derived funding may come from State, local government, or private sector partners. Note that funding identified to support continued operations, maintenance, and management of the system will *not* be considered as part of the partnership's cost-share contribution.

Offerors are encouraged to consider additional matching share above and beyond the required minimum match described above. Those offerors willing to propose additional match may include the value of federally-supported projects directly associated with the 511 model deployment. Offerors that do propose additional matching share above and beyond the required minimum match may receive additional consideration in the proposal evaluation.

The U.S. DOT and the Comptroller General of the United States have the right to access all documents pertaining to the use of Federal ITS funds and non-Federal contributions. Grantees and subgrantees are responsible for obtaining audits in accordance with the Single Audit Act Amendments of 1996 (31 U.S.C. 7501–7507) and revised OMB Circular A–133, ''Audits of States, Local Governments, and Non-Profit Organizations.'' The audits shall be made by an independent auditor in accordance with generally accepted government auditing standards covering financial audits (refer to 49 CFR 18.26).

National Evaluation

Evaluation is the reasoned consideration of how well project goals and objectives are being achieved. The primary purpose of evaluation is to cause changes in the project so that it eventually meets or exceeds its goals and objectives. Formal, in-depth, independently conducted evaluations are funded by the ITS JPO.

The partnerships selected to participate in this 511 model deployment are expected to cooperate with the ITS JPO and its national evaluation team. The independent national evaluator is selected and provided by the ITS JPO.

This cooperation that is expected by the awarded partnership includes:

(a) Providing all relevant project information such as cost data (deployment, operations, and maintenance), project goals and objectives, contractual documents, project documentation, existing or archived data, benefits data, and other project related information;

(b) Ensuring that the relevant project information is provided to the independent national evaluator in a timely fashion;

(c) Identifying an evaluation point(s) of contact to represent the participating agencies in coordinating with the independent national evaluator;

(d) Making accommodations (where appropriate) for the independent national evaluator to be present at coordination or partnership meetings;

(e) Ensuring that any self-evaluation activities being conducted by the project participants are coordinated with and reviewed by the national evaluation effort; and

(f) Providing review of relevant reports, presentations, etc., prepared by the independent national evaluator.

Eligibility

To be eligible for participation in the 511 model deployment program, applications must:

(a) Demonstrate that they either have an operational 511 traveler information telephone system, or have a telephone system for traveler information that is prepared to convert to using 511;

(b) Demonstrate that the proposed location for the 511 model deployment experiences recurring congestion, has roadway construction that will significantly impact regional travel for the period of the model deployment, is likely to experience weather conditions that will impact regional travel during the period of the model deployment (snowstorms, hurricanes, etc.), offers multiple mode choices for regional travel, and has some form of regional incident management program that is coordinated with public safety agencies;

(c) Demonstrate that the transportation data and information generated from the federal funds applied to this model deployment, as well as all public sector matching funds, will be made available equally and freely (apart from the costs of the physical connection to retrieve such data) to all parties who express interest in such data or information;

(d) Demonstrate that sufficient funding is available to successfully complete all aspects of implementing the 511 model deployment;

(e) Contain a technical plan, a management and staffing plan, and a financial plan. Any portion of the application or its contents that may contain proprietary information shall be clearly indicated; otherwise, the application and its contents shall be non-proprietary; and

(f) Demonstrate a commitment to a 12 month schedule that will produce

results within the expected period of performance.

Instructions to Applicants

An application to participate in the 511 model deployment shall consist of three parts: (1) A technical plan describing the proposed project team and the approach for implementing 511 services in accordance with the objectives and scope; (2) a management and staffing plan that provides the names of all key personnel and the positions they will occupy as related to this project; and (3) a financial plan, that describes the proposed activities to be conducted with this funding. The complete application shall not exceed 35 pages in length, exclusive of appendices, résumés, and Memoranda of Understanding (MOUs) or other documents indicating cooperation among proposing parties. A page is defined as one side of an 8½ by 11-inch paper, with a type font no smaller than 12 point. Applicants must submit seven (7) copies plus an unbound reproducible copy. The cover sheet or front page of the application should include the name, address, e-mail address, fax number and phone number of an individual to whom correspondence and questions about the application may be directed.

The technical, management and staffing, and financial plans together shall describe the existing inter-agency, inter-jurisdictional, and public/private cooperation and partnership arrangements, working relationships, and information sharing that will be integral to the 511 model deployment. All inter-agency, inter-jurisdictional, and public/private cooperation and partnerships necessary to support the 511 model deployment shall be documented with signed MOUs, or alternate appropriate documents, that clearly define financial and programmatic responsibilities and relationships among the partners. Similarly, the application should document business relationships with the private sector to support the 511 model deployment, for example, as telecommunications providers or as providers of traveler information services or products. The MOUs, or alternate appropriate documents, must clearly describe and document the role of the private sector, and the financial and institutional arrangement(s) under which they are integrated into the 511 model deployment. Applicants should include copies of the MOUs or other indications of cooperation. Applicants are strongly encouraged to seek participation from certified disadvantaged business enterprises (see 49 CFR part 26), historically black colleges and universities, Hispanic serving institutions, and other minority colleges.

Applications shall be organized in the following three sections:

1. Technical Plan

Applications should describe the partnership or project team arrangements, which include providing the information described in the preceding paragraph. Applications should describe the methodology for advancing their existing, or soon-to-be-available, 511 system to provide a sophisticated user interface with high quality content. This technical approach, at a minimum, should:

(a) Describe the methodology to collocate and ultimately to fuse relevant data elements to provide 511 users with comprehensive, current, multi-modal traveler information, including a description of the current sources of information along with the sources of information that will be included for the innovative 511;

(b) Describe the provision of any personalized and/or geographically specific content to the 511 user (applicants must demonstrate an acknowledgement and understanding of the *ITS Fair Information and Privacy Principles* crafted by the Intelligent Transportation Society of America[3]);

(c) Describe a generalized migration plan that describes how and when the existing, or soon-to-be-deployed, 511 service will be migrated to the proposed innovative services;

(d) Describe how the enhanced 511 service will differ from the service already provided to the user in terms of sophistication of the user interface and the reliability and quality of the information provided; and

(e) Describe how the 511 service may be accessible for the rural and inter-city travelers.

2. Project Management and Staffing Plan

The application should include a management and staffing plan that provides a clear description of the lines of responsibility, authority, and communication among the participants in the 511 model deployment. The management and staffing plan shall include the names of all key personnel and the positions they will occupy as related to the 511 model deployment. Provide the estimated staffing in terms of length of employment for each staff member and categorized by the types of staff required. The management and staffing plan should demonstrate that the project manager is capable, available, and able to commit to a level of involvement that ensures project success. Also include brief biographical summaries of key technical and other personnel. Applicants should provide the schedule of all key activities, including contingency for possible difficulties.

3. Financial Plan

The application should provide a description of the cost of achieving the objectives of the model deployment, and the partnership's plans for ensuring the matching funds required by this solicitation. The application should provide a statement of commitment from the proposed 511 model deployment partners that affirms that the proposed funding is secure. The application should include all financial commitments, from both the public and private sector.

Selection Criteria

Applicants must submit acceptable technical, management and staffing, and financial plans together that provide sound evidence that the proposed partnership can successfully meet the objectives of the 511 model deployment. The ITS JPO will use the following criteria, in order of importance, in selecting locations for participation in the 511 model deployment.

1. Technical Plan

The technical plan must contain an operational concept and technical approach that demonstrates how the 511 model deployment will operate when fully implemented, as well as during any incremental implementation steps leading to full deployment. The technical plan must define the operational roles and responsibilities of the partners during operations (and key operator responsibilities). Applicants must describe the changes to existing systems and additional elements.

The technical plan will be evaluated on its adequacy and reasonableness to achieve the objectives of the 511 model deployment, as previously described under Objectives and Scope of the 511 Model Deployment. In particular, the technical plan will be evaluated for the overall concept and the extent to which it addresses the scope described for the 511 model deployment, including the content and user interface of the 511 system. Specifically, the following sub-criteria will be used to evaluate the technical proposal (these criteria are listed in order of importance):

[3] This document can be obtained through *http://www.itsa.org/privacy.html*

(a) The ability to provide frequently updated information from a variety of sources including traffic management, transit management, roadway weather information services, construction and road closure information, parking management, and emergency services;

(b) How well the applicant demonstrates the capacity to provide sophisticated, innovative solutions in content creation, fusion, and dissemination;

(c) How well the applicant demonstrates the capacity to provide sophisticated, innovative solutions in designing and implementing the user interface;

(d) The design of an implementation strategy including a timeline for rollout of the enhanced 511 service;

(e) The application of ITS Standards for information exchange and delivery; and

(f) The demonstrated ability to bring together State, metropolitan, and local partners to create a seamless, regional traveler information system.

2. Management and Staffing Plan

The management and staffing plan must demonstrate a reasonable estimate that reflects the level of effort and skills needed to successfully complete the 511 model deployment, along with the identification of the organizations that will supply the staff needed, lines of reporting, and responsibilities. The management and staffing plan must include the names and qualifications of key staff.

The management and staffing plan will demonstrate a commitment to hire or assign a project manager and provide adequate full-time staff to ensure timely implementation of the 511 model deployment. Proposed staff should have demonstrated skills for effective operations and management, or the commitment to acquiring the necessary skills in relevant technical areas, such as systems engineering and integration; telecommunications; and information management.

The selection will be based on the adequacy, thoroughness, and appropriateness of the management and staffing plan, including organization of the project team, staffing allocation, and the schedule for completing the proposed work. Some of the specific items that will be evaluated in the management and staffing plan are:

(a) The availability of key personnel among the participating agencies to attend periodic 511 coordination meetings;

(b) The key personnel that are focused on the systems engineering aspects for incorporating the enhancements to the existing, or soon-to-be-deployed, 511 service; and

(c) A staffing chart that demonstrates the relationships among the participating organizations, including the names of the key personnel from each of the organizations.

3. Financial Plan

The ITS JPO will evaluate the applications based on the total cost of the 511 model deployment, as well as the individual staffing costs. The financial plan must demonstrate that sufficient funding is available to successfully complete all aspects of the 511 model deployment as described in the technical plan. The financial plan must provide the financial information described previously under Instructions to Applicants. The financial plan must include a clear identification of the proposed funding for the 511 model deployment, including an identification of the required minimum 20% matching funds.

The financial plan must include a sound financial approach to ensure the timely deployment and the continued, long-term operations and management of the 511 system. The financial plan must include documented evidence of continuing fiscal capacity and commitment from anticipated public and private sources.

Authority: Sec. 5001(a)(5), sec. 5001(b), sec. 5207(d), Pub. L. 105–178, 112 Stat. 107, 420; 23 U.S.C. 315; 49 CFR 1.48; and 49 CFR 18.26.

Issued on: January 9, 2002.

Mary E. Peters,

Administrator, Federal Highway Administration.

Jennifer L. Dorn,

Administrator, Federal Transit Administration.

[FR Doc. 02–1163 Filed 1–15–02; 8:45 am]

BILLING CODE 4910–22–P

DEPARTMENT OF TRANSPORTATION

Federal Highway Administration

Federal Transit Administration

[FHWA Docket No. FHWA–2000–6757]

High Speed Rail Projects for the Congestion Mitigation and Air Quality Improvement Program (CMAQ)

AGENCIES: Federal Highway Administration (FHWA), Federal Transit Administration (FTA), DOT.

ACTION: Notice; final decision on CMAQ eligibility for high speed rail projects.

SUMMARY: This notice announces a decision regarding the eligibility of Congestion Mitigation and Air Quality Improvement (CMAQ) funds for projects outside nonattainment or maintenance area boundaries. A request for comments on this issue was published at 65 FR 16997 on March 30, 2000. Eligibility under the CMAQ program has already been granted for high speed rail improvements located within air quality nonattainment and maintenance areas. The issue raised by several States was if, and under what conditions, State departments of transportation (DOT) should be permitted to use their CMAQ allocations to fund high speed rail improvements located outside of nonattainment or maintenance areas. This notice summarizes the comments to the docket and addresses the key issues and concerns raised by respondents. In this notice, the FHWA and the FTA reaffirm the current policy which allows CMAQ funding for projects in close proximity to nonattainment and maintenance areas where it is determined that the air quality benefits will be realized primarily within such areas. Intercity rail lines, including high speed rail projects, compete equally with other types of projects under these criteria and have been funded under CMAQ in some places.

FOR FURTHER INFORMATION CONTACT: For the FHWA program office: Mr. Daniel Wheeler, Office of Natural Environment, (202) 366–2204. For the FTA program office: Mr. Abbe Marner, Office of Planning, (202) 366–4317. Office hours are from 8 a.m. to 4:30 p.m., e.t., Monday through Friday, except Federal holidays.

SUPPLEMENTARY INFORMATION:

Electronic Access

You may retrieve comments online through the Document Management System (DMS) at *http://dmses.dot.gov/submit.* The DMS in available 24 hours each day, 365 days each year. Electronic retrieval help and guidelines are available under the help section of the web site.

An electronic copy of this document may also be downloaded by using a computer, modem and suitable communications software from the Government Printing Office's Electronic Bulletin Board Service at (202) 512–1661. Internet users may also reach the Office of the Federal Register's home page at: *http://www.nara.gov/fedreg* and the Government Printing Office's web page at: *http://www.access.gpo.gov/nara.*

Background

The CMAQ program was established by the Intermodal Surface

Transportation Efficiency Act of 1991 (Pub. L. 102–240, 105 Stat. 1914) and reauthorized with some changes by the Transportation Equity Act for the 21st Century (TEA–21) in 1998 (Pub. L. 105–178, 112 Stat. 107). The primary purpose of the CMAQ program is to fund transportation projects that reduce air pollution emissions in areas designated by the U.S. Environmental Protection Agency (EPA) as nonattainment or maintenance with respect to a National Ambient Air Quality Standard (NAAQS).[1] Program guidance was issued by the FHWA and the FTA on April 28, 1999. This guidance document was published at 65 FR 9040 on February 23, 2000.

The current CMAQ statutory language, which is codified in section 149 of title 23 of the United States Code, requires that projects and programs proposed for CMAQ funding be for a designated area.[2] The FHWA and the FTA have generally interpreted the statute to allow CMAQ funding for projects within nonattainment and maintenance areas, but the agencies' guidance allows funding for proposals that are in close proximity to designated areas where the air quality benefits are primarily realized in those areas. For example, a park-and-ride lot located at the edge of a metropolitan area may reduce the number of cars going into that area by the same amount whether it is located just inside the officially designated boundary or just outside of it. Another example is a commuter rail line with a segment located beyond the nonattainment area boundary.

The purpose of the current policy is to allow CMAQ eligibility for projects which serve a designated area by being very close to the area and whose emission reductions primarily benefit such areas, so long as those projects meet all of the statutory eligibility criteria of 23 U.S.C. 149. The primary eligibility criterion is a reduction in transportation related emissions that will contribute to the attainment or maintenance of a NAAQS.

Eligibility for high speed rail projects has already been established under the above policy. Several States have explored the possibility of using CMAQ funds to support high speed rail projects outside of nonattainment or maintenance areas on the basis that they would have benefits within designated areas only if an entire corridor were funded, including portions outside of such areas.

The issue then is whether, and under what conditions, State DOTs should be permitted to use their States' CMAQ allocations to fund high speed rail improvements located outside of nonattainment or maintenance areas. To gather input from interested parties, the FHWA and the FTA published a request for comments at 65 FR 16997 on March 30, 2000.

Discussion of Comments

A total of 39 comments were received. Twenty-one commenters opposed expansion of eligibility and believed the existing policy should remain intact. There were 18 who supported it, either conditionally or fully. Those who supported changing the policy stated that emissions reductions are the most important part of CMAQ eligibility, and therefore projects that reduce emissions should proceed. Those who proposed conditional support for the expansion felt that such projects may be eligible, but should be held to a higher standard, or have funding limitations or a separate funding source.

A categorization of these comments is as follows: Seven metropolitan planning organizations (MPOs), five State DOTs, one State air agency, two cities, one private citizen and five associations opposed the expansion of existing policy. One State legislator, one MPO, three State DOTs, two railroads, one railroad development commission and five rail passenger associations supported changes. The five comments that expressed limited support, or support under certain conditions, were all from State DOTs.

The comments were generally thoughtful, and many raised excellent points. However, no comments were received that persuaded us that the current policy on eligibility was unsound. Several issues were raised, however, that do merit further discussion and thereby provide an opportunity for further clarification and amplification of our current interpretation of the factors that serve as the basis for our position. The full set of comments can be reviewed by accessing: *http://dms.dot.gov*. The docket number is FHWA–2000–6757.

Those who did not support the expanded eligibility argued that it conflicts with legislative language and intent that they claim precludes funding for projects outside of nonattainment and maintenance areas. One group commented that ''Congress * * * (in) * * * TEA–21 specifically directed CMAQ allocations to be used by States to fund projects that reduce transportation-related emissions in air quality nonattainment areas. * * * proposal(s) to fund projects outside of these areas are not in compliance with the law's intent * * *.''

Other commenters took issue with the flexibility that currently exists in the guidance. Several of those opposed to expansion expressed concern that even allowing eligibility for projects in close proximity to the nonattainment or maintenance area does not go far enough in ensuring that air pollution will be reduced in the area. One stated, ''The ability to demonstrate air quality benefits for high speed rail projects outside the nonattainment areas would be problematic at best.''

Overall, supporters of expanded eligibility were of the opinion that this new high speed rail service would benefit air quality in both nonattainment/maintenance areas as well as attainment areas. Nine of the respondents commented that there would be positive emissions benefits in the nonattainment and maintenance areas regardless of whether the high speed rail service passed through attainment areas. Responses included statements such as ''all projects that contribute to decreased pollution and congestion should be considered * * *'' and ''[T]he critical factor should not be where the funds are spent, but rather how much congestion and pollution will be prevented in nonattainment areas * * *.''

There were also a number of respondents whose support was limited. These respondents favored the idea of CMAQ flexibility for rail projects, but through additional eligibility requirements, new regulations, or major changes to the program for which statutory authority does not exist. Many of these proposed changes are infeasible under current legislation. However, a number of these respondents provided information that may help to address

[1] States which have no designated nonattainment or maintenance areas receive a minimum apportionment of one-half of one percent of the national CMAQ funding. This money may be spent anywhere in the State for any project which would be eligible for funding under the Surface Transportation Program (STP) as well as for any CMAQ purpose. States whose apportionments based on their nonattainment and maintenance area populations are less than one-half of one percent receive additional funds to make up to the one-half percent minimum. These additional funds may also be spent anywhere in the State for any STP or CMAQ eligible purpose.

[2] Specifically, 23 U.S.C. 149(b) provides: ''ELIGIBLE PROJECTS.—Except as provided in subsection (c), a State may obligate funds apportioned to it under section 104(b)(2) for the congestion mitigation and air quality improvement program only for a transportation project or program if the project or program is for an area in the State that is or was designated as a nonattainment area for ozone, carbon monoxide, or particulate matter under section 107(d) of the Clean Air Act (42 U.S.C. 7407(d)) and classified pursuant to section 181(a), 186(a), 188(a), or 188(b) of the Clean Air Act (42 U.S.C. 7511(a), 7512(a), 7513(a), or 7513(b)) or is or was designated as a nonattainment area under such section 107(d) after December 31, 1997, and * * *.''

the issues of what it means for projects to be in close proximity to and primarily benefitting the nonattainment area. For example, it was suggested that ''close proximity should be defined as a government defined jurisdiction that shares a common border with the nonattainment or maintenance area.''

In relation to the demonstration of benefits primarily realized (or occurring) within the designated areas, it was offered that ''Projects must demonstrate air quality benefits primarily within the nonattainment area or maintenance area boundary [and] a performance standard is important. To be eligible for funding, at least 75 percent of the project's emission reduction should accrue in the nonattainment or maintenance area.'' Apparently with respect to defining the criterion that the project primarily serve the area, it was also suggested that the * * * decision * * * on whether a project provides enough emission reduction potential to warrant receipt of a CMAQ allocation should be decided at the State and local level.''

The FHWA and the FTA believe that the commenter is right that a preponderance of the emissions reduction benefit should accrue within such areas for a project to be eligible. However, no commenter provided a legislative or clear scientific basis to assign any specific share of emission reduction benefits as a threshold for determining eligibility. The threshold could just as easily be set at 85 or 95 percent to meet the statutory requirements. Further, the agencies believe that while State and local entities, including the MPOs, are in a good position to weigh the emissions and air quality benefits of an activity proposed for CMAQ funds, a final determination must rest with the FHWA and the FTA.

The FHWA and the FTA continue to believe that there are instances where the project sponsor can demonstrate benefits primarily for a nonattainment or maintenance area despite the fact that the project or program may not be physically located entirely within the boundary area, but that this demonstration becomes increasingly difficult the farther the project, program or service extends beyond the area's boundaries. We have retained ''close proximity'' as part of the eligibility standard because, whatever else may be argued about the difficulty of accurately quantifying benefits, they do diminish with distance.

There is no disagreement among the commenters that the primary purpose of the CMAQ program is to fund transportation improvements within nonattainment and maintenance areas that reduce emissions. The FHWA and the FTA believe that this will continue to be the general case for CMAQ eligibility. The FHWA and the FTA have administered the program under the general policy that CMAQ funds should be used for projects located in nonattainment and maintenance areas.

The current policy, set forth in the agencies' program guidance document, also allows certain circumstances under which projects can be determined to be eligible for CMAQ funding even though they are not located entirely within designated nonattainment or maintenance areas. Those exceptional circumstances are when a project is located in close proximity to designated areas and the benefits will be realized primarily within the nonattainment or maintenance area boundaries. For example, the rail proposals found eligible thus far have both begun and ended in nonattainment or maintenance areas, have been for the most part located in designated areas, and have benefits which are primarily realized within the boundaries of the designated areas.

As mentioned above, the FHWA and the FTA support flexibility and keeping the decisionmaking as close to the affected area as possible. Standards to define ''close proximity'' are difficult to establish without being arbitrary. Defining a specific distance from the designated boundary could artificially establish a second boundary. This new ''boundary'' could lead to another round of proximity questions. To avoid this, we believe that maintaining our policy of allowing emission reducing projects to go forward without specifically defining close proximity is the more prudent course. Of course, in the absence of an exact limit, the ''burden of proof'' falls on the project sponsor. It is up to the project sponsor to demonstrate that its emission reductions primarily benefit the nonattainment or maintenance area, a task clearly aided by showing a close proximity to the area.

We believe that the preponderance of emission reduction benefits must accrue to such areas, in comparison with other areas served, to demonstrate that the project will primarily benefit the nonattainment or maintenance area. To that end we believe that the project sponsor must demonstrate the project's emission reduction benefits will primarily be realized within the nonattainment and maintenance area boundaries to be eligible.

High Speed Rail Projects

High speed rail service, in general, is a passenger transportation mode that links well-populated metropolitan areas that could be as much as 100 to 500 miles apart. It usually has few station stops since more would increase travel times. The metropolitan areas that such links serve may, or may not, be in nonattainment or maintenance areas.

A project to improve a high speed rail service which is located within a nonattainment or maintenance area would be eligible for CMAQ if it reduces emissions and meets the other eligibility criteria and title 23, U.S. Code, requirements. Similarly, a high speed rail service may link two or more nonattainment (or maintenance) areas. If the project creates emission reductions in the nonattainment or maintenance areas, it may be eligible for CMAQ.

Using CMAQ funds, the FHWA has funded rail projects that primarily serve nonattainment or maintenance areas and whose benefits occur primarily within those areas. CMAQ funds have already been used for a variety of freight and passenger rail services in New York, Ohio, Maine, and Illinois.

One such project is the Empire Corridor of New York State. CMAQ funds are being provided to support rail improvements necessary for high speed rail in five counties between New York City and Schenectady. Four of those counties are designated as maintenance areas for the 1-hour ozone standard. One county, in the middle of the project, is not designated.

The portion of the Empire Corridor that is being funded is approximately 160 miles long and connects the New York City nonattainment area with the Albany maintenance area. Various track improvements, double track additions, bridge work and station improvements are needed to complete a viable project, in addition to new train-sets that will run the entire length of the project. Approximately 25 miles of the track work will be in the one county that is not designated. That track begins and ends in designated areas and is in close proximity to a designated county just to the west of the county through which it runs. The project is not viable without the link through the undesignated county, and the emissions benefits to be obtained within the designated areas by providing a quick alternative to automobile travel cannot be realized without this important portion. Therefore, the entire length from New York City to Schenectady has been found to be eligible for CMAQ funding, including the link within the one county that is not designated.

Another proposal that was recently approved is to provide CMAQ support to a new rail service between Los Angeles and Las Vegas. The State of Nevada proposed to provide a relatively small portion of the total cost of this service using CMAQ funds. The eligibility determination was based on the particulate emission reductions to be obtained within the Las Vegas particulate matter nonattainment area.

Within Nevada, the project will begin in the Las Vegas nonattainment area and proceed southwesterly toward the California State line, about 30 miles away. Approximately half of that distance is within the designated nonattainment area; the remainder of the distance within Nevada is not designated. Within California, the entire remaining distance is designated nonattainment for particulate matter. The western part of the route, closer to Los Angeles is classified as a serious nonattainment area. Thus, only about 15 miles of the approximately 275 mile long project is outside of designated areas. And, the emission benefits related to moving people by train rather than by automobile can only be obtained by a continuous project, including the area not designated.

Policy Decision

The FHWA and the FTA believe that the current policy can serve the needs of those high speed rail projects that are eligible within the statutory authority of 23 U.S.C. 149. Under the current policy, rail projects can be funded if they (1) are located within, or in close proximity to, nonattainment or maintenance areas, (2) can demonstrate the projects' emission reductions are realized primarily within the designated areas, and (3) meet other criteria for CMAQ funding. There is no compelling need to modify the policy at this time. The determination that proposals for CMAQ funding meet these criteria should be made in close collaboration with State and local officials at transportation and air quality agencies, including the MPO, and the EPA, but the final determination of CMAQ eligibility rests with the FHWA and the FTA, as always.

Authority: 23 U.S.C. 149, 315; 49 CFR 1.48 and 1.51.

Issued on: January 9, 2002.

Mary E. Peters,

Administrator, Federal Highway Administration.

Jennifer L. Dorn,

Federal Transit Administrator.

[FR Doc. 02–1164 Filed 1–15–02; 8:45 am]

BILLING CODE 4910–22–P

DEPARTMENT OF TRANSPORTATION

Surface Transportation Board

[STB Finance Docket No. 34149]

Stillwater Central Railroad, Inc.—Acquisition Exemption—The Burlington Northern and Santa Fe Railway Company

Stillwater Central Railroad, Inc. (SCRR), a Class III rail carrier, has filed a verified notice of exemption under 49 CFR 1150.41 to acquire from The Burlington Northern and Santa Fe Railway Company and operate approximately 119.73 miles of rail line between milepost 549, at Wheatland, OK, and milepost 668.73, at Long, OK.

The transaction was scheduled to be consummated on or shortly after December 28, 2001.

If the notice contains false or misleading information, the exemption is void *ab initio.* Petitions to revoke the exemption under 49 U.S.C. 10502(d) may be filed at any time. The filing of a petition to revoke does not automatically stay the transaction.

An original and 10 copies of all pleadings, referring to STB Finance Docket No. 34149, must be filed with the Surface Transportation Board, Office of the Secretary, Case Control Unit, 1925 K Street, NW., Washington, DC 20423–0001. In addition, a copy of each pleading must be served on Karl Morell, Esq., BALL JANIK LLP, 1455 F Street, NW., Suite 225, Washington, DC 20005.

Board decisions and notices are available on our website at *www.stb.dot.gov.*

Decided: January 4, 2002.

By the Board, David M. Konschnik, Director, Office of Proceedings.

Vernon A. Williams,

Secretary.

[FR Doc. 02–766 Filed 1–15–02; 8:45 am]

BILLING CODE 4915–00–P

DEPARTMENT OF TRANSPORTATION

Surface Transportation Board

[STB Finance Docket No. 34121]

Craggy Mountain Line, Inc.—Acquisition and Operation Exemption—Norfolk Southern Railway Co.

Craggy Mountain Line, Inc. (CMLX), a noncarrier, has filed a verified notice of exemption under 49 CFR part 1150.31 to acquire and operate approximately 3.45 miles of rail line currently owned by Norfolk Southern Railway Company (NS). The line, known as the Asheville to Craggy Branch, is a portion of the former Southern Railroad located in Woodfin Township, Buncombe County, NC, and extends between the beginning Survey Station ACM, 17+63=0100 in Woodfin Township and the ending Survey Station 123+00 ''Asheville to Southern'' 17+97 in Woodfin Township. CMLX certifies that its projected annual revenues as a result of this transaction will not result in the creation of a Class I or Class II rail carrier, and further certifies that its projected annual revenues will not exceed $5 million.

The transaction was scheduled to be consummated on or after December 31, 2001.

If the verified notice contains false or misleading information, the exemption is void *ab initio.* Petitions to reopen the proceeding to revoke the exemption under 49 U.S.C. 10502(d) may be filed at any time. The filing of a petition to revoke will not automatically stay the transaction.

An original and 10 copies of all pleadings, referring to STB Finance Docket No. 34121, must be filed with the Surface Transportation Board, Office of the Secretary, Case Control Unit, 1925 K Street, NW., Washington, DC 20423–0001. In addition, a copy of each pleading must be served on David R. Payne, P.A., 218 East Chestnut St., Asheville, NC 28801.

Boards decisions and notices are available on our Web site at ''*www.stb.dot.gov.*''

Decided: January 9, 2002.

By the Board, David M. Konschnik, Director, Office of Proceedings.

Vernon A. Williams,

Secretary.

[FR Doc. 02–968 Filed 1–15–02; 8:45 am]

BILLING CODE 4915–00–P

DEPARTMENT OF TRANSPORTATION

Bureau of Transportation Statistics

Agency Information Collection; Activity Under OMB Review; Report of Financial and Operating Statistics for Small Aircraft Operators

AGENCY: Bureau of Transportation Statistics (BTS), DOT.

ACTION: Notice.

SUMMARY: In compliance with the Paperwork Reduction Act of 1995, Public Law 104–13, the Bureau of Transportation Statistics invites the general public, industry and other governmental parties to comment on the continuing need for and usefulness of BTS collecting financial, traffic and operating statistics from small

certificated and commuter air carriers. Small certificated air carriers (operate aircraft with 60 seats or less or with 18,000 pounds of payload capacity or less) currently must file the five quarterly schedules listed below:

A–1 *Report of Flight and Traffic Statistics in Scheduled Passenger Operations,*

E–1 *Report of Nonscheduled Passenger Enplanements by Small Certificated Air Carriers,*

F–1 *Report of Financial Data,*

F–2 *Report of Aircraft Operating Expenses and Related Statistics, and*

T–1 *Report of Revenue Traffic by On-Line Origin and Destination.*

Commuter air carriers must file the three quarterly schedules listed below:

A–1 *Report of Flight and Traffic Statistics in Scheduled Passenger Operations,*

F–1 *Report of Financial Data,*

T–1 *Report of Revenue Traffic by On-Line Origin and Destination.*

On August 28, 2001, BTS published in the **Federal Register** (66 FR 45201) a notice of proposed rulemaking which recommends that small certificated and commuter air carriers report their traffic under the T–100 reporting system. If this proposal becomes a final rule, Form 298–C, Schedules A–1, E–1 and T–1 would be eliminated.

Commenters should address whether BTS accurately estimated the reporting burden and if there are other ways to enhance the quality, utility, and clarity of the information collected.

DATES: Written comments should be submitted by March 18, 2002.

ADDRESSES: Comments should be directed to: Office of Airline Information, K–25, Room 4125, Bureau of Transportation Statistics, 400 Seventh Street, SW., Washington, DC 20590–0001, fax No. 366–3383 or e-mail *bernard.stankus@bts.gov.*

Comments: Comments should identify the OMB # 2138–0009. Persons wishing the Department to acknowledge receipt of their comments must submit with those comments a self-addressed stamped postcard on which the following statement is made: Comments on OMB # 2138–0009. The postcard will be date/time stamped and returned.

FOR FURTHER INFORMATION CONTACT: Bernie Stankus, Office of Airline Information, K–25, Room 4125, Bureau of Transportation Statistics, 400 Seventh Street, SW., Washington, DC 20590–0001, (202) 366–4387.

SUPPLEMENTARY INFORMATION:

OMB Approval No.: 2138–0009.

Title: Report of Financial and Operating Statistics for Small Aircraft Operators.

Form No.: BTS Form 298–C.

Type Of Review: Extension of a currently approved collection for the financial data. The traffic data will be included under OMB Approval number 2138–0040.

Respondents: Small certificated and commuter air carriers.

Number of Respondents: 90.

Estimated Time per Response: 4 hours per commuter carrier; 12 hours per small certificated carrier.

Total Annual Burden: 2,880 hours.

Needs and Uses: Program uses for Form 298–C financial data are as follows:

Mail Rates

The Department of Transportation sets and updates the Intra-Alaska Bush mail rates based on carrier aircraft operating expense, traffic, and operational data. Form 298–C cost data, especially fuel costs, terminal expenses, and line haul expenses are used in arriving at rate levels. DOT revises the established rates based on the percentage of unit cost changes in the carriers' operations. These updating procedures have resulted in the carriers receiving rates of compensation that more closely parallel their costs of providing mail service and contribute to the carriers' economic well-being.

Essential Air Service

DOT often has to select a carrier to provide a community's essential air service. The selection criteria include historic presence in the community, reliability of service, financial stability and cost structure of the air carrier.

Carrier Fitness

Fitness determinations are made for both new entrants and established U.S. domestic carriers proposing a substantial change in operations. A portion of these applications consists of an operating plan for the first year (14 CFR part 204) and an associated projection of revenues and expenses. The carrier's operating costs, included in these projections, are compared against the cost data in Form 298–C for a carrier or carriers with the same aircraft type and similar operating characteristics. Such a review validates the reasonableness of the carrier's operating plan.

The quarterly financial submissions by commuter and small certificated air carriers are used in determining each carrier's continuing fitness to operate. Section 41738 of Title 49 of the United States Code requires DOT to find all commuter and small certificated air carriers fit, willing, and able to conduct passenger service as a prerequisite to providing such service to an eligible essential air service point. In making a fitness determination, DOT reviews three areas of a carrier's operation: (1) The qualifications of its management team, (2) its disposition to comply with laws and regulations, and (3) its financial posture. DOT must determine whether or not a carrier has sufficient financial resources to conduct its operations without imposing undue risk on the traveling public. Moreover, once a carrier begins conducting flight operations, DOT is required to monitor its continuing fitness.

Senior DOT officials must be kept fully informed and advised of all current and developing economic issues affecting the airline industry. In preparing financial condition reports or status reports on a particular airline, financial and traffic data are analyzed. Briefing papers prepared for senior DOT officials may use the same information.

Air Transportation Safety and System Stabilization Act

DOT is using financial data reported by small certificated and commuter air carriers to establish benchmarks to assess the reasonableness of air carrier claims under the Stabilization Act.

Donald W. Bright,

Assistant Director, Airline Information, Bureau of Transportation Statistics.

[FR Doc. 02–1157 Filed 1–15–02; 8:45 am]

BILLING CODE 4910–FE–P

DEPARTMENT OF TRANSPORTATION

Bureau of Transportation Statistics

Agency Information Collection; Activity Under OMB Review; Report of Financial and Operating Statistics for Large Certificated Air Carriers

AGENCY: Bureau of Transportation Statistics (BTS), DOT.

ACTION: Notice.

SUMMARY: In compliance with the Paperwork Reduction Act of 1995, Public Law 104–13, the Bureau of Transportation Statistics invites the general public, industry and other governmental parties to comment on the continuing need for and usefulness of the BTS Form 41. Comments are requested concerning whether (a) the continuation of Form 41 is necessary for DOT to carry out its mission of promoting air transportation; (b) BTS accurately estimated the reporting burden; (c) there are other ways to enhance the quality, use and clarity of the data collected; and (d) there are ways to minimize reporting burden,

including the use of automated collection techniques or other forms of information technology.

DATES: Written comments should be submitted by March 18, 2002.

ADDRESSES: Comments should be directed to: Office of Airline Information, K–25, Room 4125, Bureau of Transportation Statistics, 400 Seventh Street, SW., Washington, DC 20590–0001, fax No. (202) 366–3383 or e-mail *bernard.stankus@bts.gov.*

Comments: Comments should identify the OMB # 2138–0013. Persons wishing the Department to acknowledge receipt of their comments must submit with those comments a self-addressed stamped postcard on which the following statement is made: Comments on OMB # 2138–0013. The postcard will be date/time stamped and returned.

FOR FURTHER INFORMATION CONTACT: Bernie Stankus, Office of Airline Information, K–25, Room 4125, Bureau of Transportation Statistics, 400 Seventh Street, SW., Washington, DC 20590–0001, (202) 366–4387.

SUPPLEMENTARY INFORMATION:

OMB Approval No.: 2138–0013.

Title: Report of Financial and Operating Statistics for Large Certificated Air Carriers.

Form No.: BTS Form 41.

Type Of Review: Extension of a currently approved collection.

Respondents: Large certificated air carriers.

Number of Respondents: 75.

Estimated Time per Response: 4 hours per schedule, an average carrier may submit 90 schedules in one year.

Total Annual Burden: 27,000 hours.

Needs and Uses: Program uses for Form 41 data are as follows:

Mail Rates

The Department of Transportation sets and updates the international and mainline Alaska mail rates based on carrier aircraft operating expense, traffic and operational data. Form 41 cost data, especially fuel costs, terminal expenses, and line haul expenses are used in arriving at rate levels. DOT revises the established rates based on the percentage of unit cost changes in the carriers' operations. These updating procedures have resulted in the carriers receiving rates of compensation that more closely parallel their costs of providing mail service and contribute to the carriers' economic well-being.

Submission of U.S. Carrier Data to ICAO

As a party to the Convention on International Civil Aviation, the United States is obligated to provide the International Civil Aviation Organization with financial and statistical data on operations of U.S. air carriers. Over 99 percent of the data filed with ICAO is extracted from the carriers' Form 41 reports.

Standard Foreign Fare and Rate Levels

DOT uses Form 41 cost data to calculate the Standard Foreign Fare Level (SFFL) for passengers and the Standard Foreign Rate Level (SFRL) for freight. Any international fare or rate set below this fare level are automatically approved. Separate passenger fare and rate levels are established for Canadian, Atlantic, Latin America, and Pacific areas. In markets where liberal bilateral or multilateral pricing agreements provide for more competitive open market pricing, such agreements may take precedence over the SFFL and SFRL.

Carrier Fitness

Fitness determinations are made for both new entrants and established U.S. domestic carriers proposing a substantial change in operations. A portion of these applications consists of an operating plan for the first year (14 CFR part 204) and an associated projection of revenues and expenses. The carrier's operating costs, included in these projections, are compared against the cost data in Form 41 for a carrier or carriers with the same aircraft type and similar operating characteristics. Such a review validates the reasonableness of the carrier's operating plan.

Form 41 reports, particularly balance sheet reports and cash flow statements play a major role in the identification of vulnerable carriers. Data comparisons are made between current and past periods in order to assess the current financial position of the carrier. Financial trend lines are extended into the future to analyze the continued viability of the carrier. DOT reviews three areas of a carrier's operation: (1) The qualifications of its management team, (2) its disposition to comply with laws and regulations, and (3) its financial posture. DOT must determine whether or not a carrier has sufficient financial resources to conduct its operations without imposing undue risk on the traveling public. Moreover, once a carrier is operating, DOT is required to monitor its continuing fitness.

Senior DOT officials must be kept fully informed as to all current and developing economic issues affecting the airline industry. In preparing financial conditions reports or status reports on a particular airline, financial and traffic data are analyzed. Briefing papers may use the same information.

War Air Service Program (Emergency Preparedness)

Under the War Air Service Program (WASP), FAA develops an official airline guide to establish air carrier boarding priorities in the event of a national emergency. The inventory of aircraft available for WASP equals the total aircraft fleet operated by certificated air carriers less the number of the largest wide-body aircraft that are allocated to the Civil Reserve Aircraft Fleet Program. Data on air carrier aircraft inventories, plus interim updates of acquisitions and retirements are used to assess the air transportation capabilities of the U.S. airline industry. This assessment is used in developing plans for emergency utilization of U.S. airline industry aircraft and resources in the event of a national emergency and/or mobilization.

Air Transportation Safety and System Stabilization Act

DOT is using Form 41 financial data to establish benchmarks to assess the reasonableness of air carrier claims under the Stabilization Act.

Donald W. Bright,

Assistant Director, Airline Information, Bureau of Transportation Statistics.

[FR Doc. 02–1158 Filed 1–15–02; 8:45 am]

BILLING CODE 4910–FE–P

DEPARTMENT OF THE TREASURY

Internal Revenue Service

Proposed Collection; Comment Request for Form 2553

AGENCY: Internal Revenue Service (IRS), Treasury.

ACTION: Notice and request for comments.

SUMMARY: The Department of the Treasury, as part of its continuing effort to reduce paperwork and respondent burden, invites the general public and other Federal agencies to take this opportunity to comment on proposed and/or continuing information collections, as required by the Paperwork Reduction Act of 1995, Public Law 104–13 (44 U.S.C. 3506(c)(2)(A)). Currently, the IRS is soliciting comments concerning Form 2553, Election by a Small Business Corporation.

DATES: Written comments should be received on or before March 18, 2002, to be assured of consideration.

ADDRESSES: Direct all written comments to George Freeland, Internal Revenue Service, room 5575, 1111 Constitution Avenue NW., Washington, DC 20224.

FOR FURTHER INFORMATION CONTACT: Requests for additional information or copies of the form and instructions should be directed to Allan Hopkins, (202) 622–6665, Internal Revenue Service, room 5244, 1111 Constitution Avenue NW., Washington, DC 20224.

SUPPLEMENTARY INFORMATION:

Title: Election by a Small Business Corporation.

OMB Number: 1545–0146.

Form Number: 2553.

Abstract: Form 2553 is filed by a qualifying corporation to elect to be an ''S'' Corporation as defined in Internal Revenue Code section 1361. The information obtained is necessary to determine if the election should be accepted by the IRS. When the election is accepted, the qualifying corporation is classified as an ''S'' Corporation and the corporation's income is taxed to the shareholders of the corporation.

Current Actions: There are no changes being made to the form at this time.

Type of Review: Extension of a currently approved collection.

Affected Public: Businesses and Farms.

Estimated Number of Respondents: 500,000.

Estimated Time Per Respondent: 15 hrs., 29 min.

Estimated Total Annual Burden Hours: 7,745,000.

The following paragraph applies to all of the collections of information covered by this notice:

An agency may not conduct or sponsor, and a person is not required to respond to, a collection of information unless the collection of information displays a valid OMB control number. Books or records relating to a collection of information must be retained as long as their contents may become material in the administration of any internal revenue law. Generally, tax returns and tax return information are confidential, as required by 26 U.S.C. 6103.

Request for Comments

Comments submitted in response to this notice will be summarized and/or included in the request for OMB approval. All comments will become a matter of public record. Comments are invited on: (a) Whether the collection of information is necessary for the proper performance of the functions of the agency, including whether the information shall have practical utility; (b) the accuracy of the agency's estimate of the burden of the collection of information; (c) ways to enhance the quality, utility, and clarity of the information to be collected; (d) ways to minimize the burden of the collection of information on respondents, including through the use of automated collection techniques or other forms of information technology; and (e) estimates of capital or start-up costs and costs of operation, maintenance, and purchase of services to provide information.

Approved: January 5, 2002.

George Freeland,

IRS Reports Clearance Officer.

[FR Doc. 02–896 Filed 1–15–02; 8:45 am]

BILLING CODE 4830–01–P

DEPARTMENT OF THE TREASURY

United States Mint

Proposed Collection; Comment Request

ACTION: Notice and request for comments.

SUMMARY: The Department of the Treasury, as part of its continuing effort to reduce paperwork and respondent burden, invites the general public and other Federal agencies to take this opportunity to comment on proposed and/or continuing information collections, as required by the Paperwork Reduction Act of 1995, Public Law 104–13 (44 U.S.C. 3506(c)(2)(A)). Currently, the United States Mint within the Department of the Treasury is soliciting comments concerning the United States Mint Generic Clearance Package for OMB.

Written comments should be received on or before March 18, 2002, to be assured of consideration. Direct all written comments to Philip Neisser, Acting Director, Office of Business Alignment, United States Mint, 801 9th Street, NW., Washington, DC 20220; 202.772.7323; *Pneisser@usmint.treas.gov*.

Requests for additional information or copies of the form(s) and instructions should be directed to Melissa Ferring, Communications Specialist, Office of Business Alignment, United States Mint, 801 9th Street, NW., Washington, DC 20220; 202.772.7320; *Mferring@usmint.treas.gov*.

SUPPLEMENTARY INFORMATION:

Title: United States Mint Generic Clearance Package.

OMB Number: 1525–0012.

Abstract: This is a request for a reinstatement of a three year Generic Clearance to conduct customer satisfaction surveys for the United States Mint.

Current Actions: The United States Mint conducts customer service surveys and focus groups to determine the level of satisfaction from the Mint customers. These actions allow the Mint access to the needs and desires of customers for future products and more efficient, economical services. The United States Mint currently has a Generic Clearance with OMB which allows expedition of the customer satisfaction surveys and focus groups. The United States Mint is requesting another three year reinstatement of this Generic Clearance.

Type of Review: This is a Reinstatement submission, with the only changes being that the necessary survey requests are far fewer than in the past three years.

Affected Public: The affected public includes the serious and casual numismatic collectors, dealers and people in the numismatic business and the general public or one time only customers.

Estimated Number of Respondents: The estimated number of respondents for the next three years is 10,390. With a total estimated number of burden hours of 4,659.

Estimated Total Annual Burden Hours: The estimated number of annual burden hours is 1,553.

Request for Comments

Comments submitted in response to this notice will be summarized and/or included in the request for OMB approval. All comments will become a matter of public record. Comments are invited on: (a) Whether the collection of information is necessary for the proper performance of the functions of the agency, including whether the information shall have practical utility; (b) the accuracy of the agency's estimate of the burden of the collection of information; (c) ways to enhance the quality, utility, and clarity of the information to be collected; (d) ways to minimize the burden of the collection of information on respondents, including through the use of automated collection techniques or other forms of information technology; and (e) estimates of capital or start-up costs and costs of operation, maintenance, and purchase of services to provide information.

Dated: January 4, 2002.

Philip Neisser,

Acting Director, Office of Business Alignment, United States Mint.

[FR Doc. 02–1072 Filed 1–15–02; 8:45 am]

BILLING CODE 4810–37–M

Federal Register

Wednesday,
January 16, 2002

Part II

Environmental Protection Agency

40 CFR Part 63

Clarifications to Existing National Emissions Standards for Hazardous Air Pollutants Delegations' Provisions; Proposed Rule

ENVIRONMENTAL PROTECTION AGENCY

40 CFR Part 63

[FRL–7122–3]

RIN 2060–AJ26

Clarifications to Existing National Emissions Standards for Hazardous Air Pollutants Delegations' Provisions

AGENCY: Environmental Protection Agency (EPA).

ACTION: Proposed amendments.

SUMMARY: As part of the section 112(l), ''Approval of State Programs and Delegation of Federal Authorities'' rulemaking process, EPA (we) agreed to clarify which portions of the existing national emission standards for hazardous air pollutants (NESHAP) contain authorities that can be delegated to State, Local, and Tribal (S/L/T) agencies (September 14, 2000). Today's rulemaking clarifies which parts of the existing NESHAP can be delegated to S/L/T agencies by adding or modifying a section in each NESHAP to describe the authorities that can be delegated to S/L/T agencies and those that must be retained by us. In addition, to further clarify which portions of the NESHAP are delegable, some NESHAP standards sections were slightly reorganized or rephrased to separate delegable from non-delegable authorities. These clarifications do not change any substantive NESHAP requirements for industrial sources. This action does not reopen any of the other requirements in these NESHAP, nor are we accepting comments beyond the scope of this proposal.

DATES: *Comments.* Submit comments on or before March 18, 2002.

Public Hearing. If anyone contacts EPA requesting to speak at a public hearing by February 5, 2002, a public hearing will be held on February 15, 2002.

ADDRESSES: *Comments.* Written comments should be submitted (in duplicate if possible) to: Air and Radiation Docket and Information Center (6102), Attention: Docket No. A–2000–57, Room M–1500, U.S. Environmental Protection Agency, 1200 Pennsylvania Avenue, NW., Washington, DC 20460. The EPA requests that a separate copy also be sent to Ms. Pam Smith, USEPA OAQPS/ITPID (C339–03), Research Triangle Park, North Carolina 27711, telephone number (919) 541–0641, facsimile (919) 541–5509 or e-mail *smith.pam@epa.gov.*

Public Hearing. If a public hearing is held, it will be held at 10 a.m. in the EPA's Office of Administration's Auditorium in Research Triangle Park, North Carolina, or at an alternate site nearby.

Docket. Docket No. A–2000–57 contains supporting information used in developing the standards. The docket is located at the U.S. Environmental Protection Agency, 401 M Street, SW., Washington, DC 20460 in room M–1500, Waterside Mall (ground floor), and may be inspected from 8:30 a.m. to 5:30 p.m., Monday through Friday, excluding legal holidays.

FOR FURTHER INFORMATION CONTACT: Mr. Tom Driscoll, USEPA OAQPS/ITPID (C339–03), Research Triangle Park, North Carolina 27711, telephone (919) 541–5135, or electronic mail at *driscoll.tom@epa.gov.*

SUPPLEMENTARY INFORMATION:

Comments. Comments and data may be submitted by electronic mail (e-mail) to: *a-and-r-docket@epa.gov.* Electronic comments must be submitted as an ASCII file to avoid the use of special characters and encryption problems and will also be accepted on disks in WordPerfect® version 5.1, 6.1, or Corel® 8 file format. All comments and data submitted in electronic form must note the docket number (Docket No. A–2000–57). No confidential business information (CBI) should be submitted by e-mail. Electronic comments may be filed online at many Federal Depository Libraries.

Commenters wishing to submit proprietary information for consideration must clearly distinguish such information from other comments and clearly label it as CBI. Send submissions containing such proprietary information directly to the following address, and not to the public docket, to ensure that proprietary information is not inadvertently placed in the docket: Attention: Docket Center, 4930 Old Page Rd., Building C, Room 530A, Research Triangle Park, NC 27709. The EPA will disclose information identified as CBI only to the extent allowed by the procedures set forth in 40 CFR part 2. If no claim of confidentiality accompanies a submission when it is received by the EPA, the information may be made available to the public without further notice to the commenter.

Public Hearing. Persons interested in presenting oral testimony or inquiring as to whether a hearing is to be held should contact, Ms. Pam Smith, USEPA OAQPS/ITPID (C339–03), Research Triangle Park, North Carolina 27711, telephone number (919) 541–0641 at least 2 days in advance of the public hearing. Persons interested in attending the public hearing must also call Ms. Smith to verify the time, date, and location of the hearing. The public hearing will provide interested parties the opportunity to present data, views, or arguments concerning these proposed emission standards.

Docket. The docket is an organized and complete file of all the information considered by the EPA in the development of this rulemaking. The docket is a dynamic file because material is added throughout the rulemaking process. The docketing system is intended to allow members of the public and industries involved to readily identify and locate documents so that they can effectively participate in the rulemaking process. Along with the proposed and promulgated standards and their preambles, the contents of the docket will serve as the record in the case of judicial review. (See section 307(d)(7)(A) of the Clean Air Act (Act).) The regulatory text and other materials related to this rulemaking are available for review in the docket or copies may be mailed on request from the Air Docket by calling (202) 260–7548. A reasonable fee may be charged for copying docket materials.

Worldwide Web (WWW). In addition to being available in the docket, an electronic copy of these proposed amendments are also available on the WWW through the Technology Transfer Network (TTN). Following signature, a copy of the amendments will be posted on the TTN's policy and guidance page for newly proposed or promulgated rules *http://www.epa.gov/ttn/oarpg.* The TTN provides information and technology exchange in various areas of air pollution control. If more information regarding accessing the TTN is needed, call the TTN HELP line at (919) 541–5384.

Regulated Entities. Entities potentially affected by this rule are S/L/T agencies that voluntarily request delegation of section 112 rules, emissions standards, or requirements. The procedures and criteria for requesting and receiving delegation are in § 63.90 through § 63.97, excluding § 63.96, of 40 CFR 63 subpart E. Facilities that are subject to the individual subparts proposed for modification should not be affected by the proposed changes, which clarify the delegation requirements between EPA and the S/L/T agencies.

Outline. The information presented in this preamble is organized as follows:

I. Background
- A. How do we delegate section 112 standards to you?
- B. When a standard is delegated, can you change any of the requirements?
- C. What is the purpose of this rulemaking?

D. What are the types of changes proposed?
E. Do these clarifications change any substantive requirements to sources?
F. Why do we need a consistent ''Implementation and Enforcement'' section in each NESHAP?
G. Once NESHAP are delegated, does the S/L/T agencies' enforcement authority replace EPA's authority?
H. Does today's rulemaking affect prior delegations of these part 63 NESHAP (maximum achievable control technology (MACT) standards)?
II. Overview of Proposed Changes
A. What categories of changes are we proposing?
B. What clarifications have we made to individual subparts?
III. Administrative Requirements
A. Docket
B. Executive Order 12866—Regulatory Planning and Review
C. Executive Order 13132—Federalism
D. Executive Order 13175—Consultation and Coordination with Indian Tribal Governments
E. Paperwork Reduction Act
F. Regulatory Flexibility Act (RFA), as amended by the Small Business Regulatory Enforcement Fairness Act of 1996 (SBREFA), 5 U.S.C. 601 et seq
G. Unfunded Mandates Reform Act of 1995
H. Executive Order 13045—Protection of Children from Environmental Health Risks and Safety Risks
I. National Technology Transfer and Advancement Act of 1995
J. Executive Order 13211—Energy Effects

I. Background

A. How Do We Delegate Section 112 Standards to You?

The requirements in 40 CFR part 63, subpart E provide a framework for you, the S/L/T agencies, to request and receive delegation of the NESHAP we, EPA, develop under section 112 of the Act. Once you accept delegation, you are responsible for implementing and enforcing the NESHAP for sources in your jurisdiction.

B. When a Standard Is Delegated, Can You Change Any of the Requirements?

In addition to the overall implementation and enforcement authority conferred by the delegation, there are separate parts of each section 112 requirement that we cannot delegate to you. Each individual NESHAP, for example, contains requirements that are considered the standards' and are, therefore, not delegable in terms of you making changes to them. Because the Administrative Procedures Act requires us to approve alternative emission limitations or control requirements through Federal rulemaking, we cannot delegate our rulemaking authority to you. More specifically, any requests by sources for alternative standards must be considered by us and acted upon in a notice and comment rulemaking. Additionally, we cannot delegate authorities that may alter the stringency of the standard, that require Federal oversight for national consistency or that may require Federal rulemaking. Generally, requests by you to revise standards for the source category (or portions thereof) must be addressed through the subpart E rulemaking process for alternative standards. Please note that nothing in the section or this rulemaking usurps your authority to have more stringent state program requirements, such as more stringent emission limitations, apply to sources subject to NESHAP.

However, the authorities in other sections of the rules may be delegable, and approval of alternatives to these requirements may be exercised by you, once you have been delegated the NESHAP through subpart E (straight delegation, § 63.91). Similar authorities may also be in the 40 CFR part 63, subpart A General Provisions, which are incorporated into the majority of the NESHAP, and they contain provisions for the consideration of alternatives to testing, monitoring, reporting, and recordkeeping requirements on a case-by-case basis. Section 63.91(g)(1)(i) of 40 CFR part 63, subpart E further clarifies that ''Category I'' changes, including minor and intermediate changes to testing, monitoring, recordkeeping, and reporting requirements may be considered and approved by delegated S/L/T agencies. There are similar discretionary authorities, to those mentioned directly above, in each NESHAP that may also be delegated to you. Please note, each NESHAP being revised in today's rulemaking will describe those authorities that will be retained by EPA. All other authorities in those NESHAP are delegable to S/L/Ts.

C. What Is the Purpose of This Rulemaking?

As a part of the large regulatory and policy effort to clarify and streamline delegation of part 63 requirements, we agreed to clarify which portions of the existing 40 CFR part 63 NESHAP contain authorities that can be delegated to you (65 FR 55810). In order to achieve this objective, we are proposing slight changes to many of the existing NESHAP. These clarifications will allow you to approve alternatives to the delegable authorities, including category I authorities listed in § 63.91(g)(i), instead of requiring a rulemaking by the EPA to approve the site-specific alternatives. Many of the existing NESHAP lack a clear delegation section which this proposal would remedy.

This is also an opportunity to make the format of the existing NESHAP more consistent with the format used for NESHAP.

D. What Are the Types of Changes Proposed?

The existing NESHAP were promulgated before we developed a consistent rule format, so each one has a slightly different format. Due to these inconsistencies, each NESHAP may need one or more clarifications, listed below, to ease delegation:

- Addition or modification of a section (Implementation and Enforcement) in each NESHAP describing the authorities that can be delegated to you and those that must be retained by us.
- Reorganization of the standards sections in NESHAP to separate compliance assurance measures from actual standards.
- Minor rephrasing of work practices and other standards developed under the authority of section 112(h) of the Act to allow approval of delegable testing, monitoring, reporting, and recordkeeping authorities by S/L/Ts and without rulemaking by us.

E. Do These Clarifications Change Any Substantive Requirements to Sources?

None of these clarifications change any substantive requirements for sources subject to these subparts. These clarifications are intended only to allow you to clearly identify which authorities you may be delegated through 40 CFR part 63, subpart E. As stated earlier, we are not accepting comment on any other provision of these subparts that is outside the scope of this proposal.

F. Why Do We Need a Consistent ''Implementation and Enforcement'' Section in Each NESHAP?

We recognized a need for more consistent formats between the standards, primarily because more than one NESHAP may apply to an individual facility. Consistent NESHAP formats will help you write comprehensive permits for these sources and allow owners and operators to focus on one rather than multiple regulatory formats. Consistent formats will also aid in determining compliance within sources; especially those facilities that are subject to more than one NESHAP. Therefore, we developed a straightforward format which we are now using in NESHAP to address these concerns and enhance the readability of the rules. We recognized that the format should include a section to describe the authorities for which you are allowed to approve alternatives to a NESHAP once

you have received delegation of the standard. This section is termed ''Implementation and Enforcement.''

Many existing NESHAP do not currently contain a section explaining which authorities must be retained by EPA and which can be delegated to S/L/T agencies. In other instances, the NESHAP contain an explanation of these authorities in a section termed ''Delegation of Authority'' which vary widely in form and in content. We are proposing to amend both the existing subparts that do contain and those that do not contain delegation provisions in today's rulemaking. We have incorporated an ''Implementation and enforcement'' section into the NESHAP that do not already contain such a section. As mentioned above, we revised the delegation provisions in subparts that currently contain a ''Delegation of Authority'' section to conform with the ''Implementation and enforcement'' section format.

G. Once NESHAP Are Delegated, Does the S/L/T Agencies' Enforcement Authority Replace EPA's Authority?

Throughout this preamble, we state that once NESHAP are delegated to you, then you will have the authority to implement and enforce those rules for sources in your jurisdiction. However, nothing in this language is intended to suggest that your enforcement agencies have replaced our Federal authority to enforce and implement those rules. We remain partners with you in enforcing the NESHAP.

H. Does Today's Rulemaking Affect Prior Delegations of These Part 63 NESHAP (MACT Standards)?

In many cases, you have already accepted delegation of these NESHAP and, consequently, you are currently implementing and enforcing them. We do not believe that today's rulemaking adversely affects existing delegations of these NESHAP to you. For the most part, today's rulemaking clarifies which of the authorities in each existing NESHAP can, and cannot, be delegated to you, so that you can approve or disapprove alternative requirements.

In all prior delegations, specific authorities in the NESHAP were generally not identified as being delegated. Instead, the NESHAP have been generally delegated in their entirety. For example, when our Regional Offices delegate a NESHAP or MACT standard through straight delegation (see 65 FR 55810, September 14, 2000) to a S/L/T, they reference the whole NESHAP, such as Subpart M—National Perchloroethylene Air Emission Standards for Dry Cleaning Facilities, in any rulemaking or documents. They usually do not reference a particular authority within the NESHAP, such as § 63.324(d), ''[E]ach owner or operator of a dry cleaning facility shall keep receipts of perchloroethylene purchases * * *'' in any delegation. Therefore, today's rulemaking will not affect your existing part 63 NESHAP delegation.

Potential issues may occur where you have already acted on the authorities you believed you had been delegated. For example, in Subpart HH, the delegation of authority paragraph in § 63.776 does not withhold the delegation of any of the standards' sections. Therefore, you may have exercised the authority to approve alternative emissions controls or limitations in this example. As mentioned above, you cannot approve alternatives to NESHAP's emissions controls or limitations because they must be established through national rulemaking. Only we can approve alternatives to emissions controls or limitations through national rulemaking.

If you have inadvertently approved alternatives to NESHAP's emissions controls or limitations for a specific source, then the appropriate EPA Regional Office must be notified of this approval. Our Regional Office will then work with you and our Office of Air Quality Planning and Standards, Office of Enforcement and Compliance Assurance, and Office of General Counsel to reevaluate the alternative through § 63.6 or the provisions in 40 CFR part 63, subpart E. If you have any questions regarding inadvertent approvals, please contact your appropriate EPA Regional Office.

II. Overview of Proposed Changes

A. What Categories of Changes Are We Proposing?

1. Adding an ''Implementation and Enforcement'' Section

The first category of changes involves adding a section that describes non-delegable authorities or changing current delegation sections to conform to a consistent format. The new ''Implementation and enforcement'' sections cite the rule sections or requirements for which you may not approve alternatives (i.e., non-delegable authorities). The authority to make changes to those sections or requirements is retained by us and includes the authority to approve any alternatives to emissions standards; including their applicability requirements. Conversely, any authority not expressly reserved for us, in these paragraphs, can be delegated to you so that you can exercise these authorities.

As part of the recent subpart E rulemaking (65 FR 55810), we have clarified which of the specific General Provisions authorities regarding alternative requirements could not be delegated to you because they would be nationally significant or would alter the stringency of an underlying standard and, thus, could not be delegated to you. We divided the General Provisions discretionary authorities into two groups, based upon the relative significance of each type of decision. Category I contains those authorities which can be delegated. We believe that the EPA Regional Office retains the ability to request review of these decisions, although we expect that this authority will be exercised infrequently. Category II contains those authorities which cannot be delegated.

In general, we believe that where possible, authority to make decisions which are not likely to be nationally significant or to alter the stringency of the underlying standard, such as minor changes to test methods, should be delegated to those with the most expertise in dealing with these kinds of decisions, the S/L/Ts; resulting in minimal involvement by us. Section 63.91(g)(1)(i) of subpart E lists the authorities in category I, i.e., those authorities which may be delegated.

Section 63.91(g)(2)(ii) of subpart E lists the authorities which may not be delegated in Category II, which includes those decisions which generally may result in a change to the stringency of the underlying standard, which is likely to be nationally significant, or which may require a **Federal Register** notice when approving an alternative. These authorities, as mentioned previously, must always be retained by us, and cannot be delegated to you. Consistent with this approach, we must retain the authority to approve major alternatives to test methods, monitoring, recordkeeping, and reporting.

With this proposal, we are not requesting comment on the appropriateness of our decisions regarding the classification of General Provisions authorities into Category I or II. That decision was recently finalized (65 FR 55810) based on public comment and internal discussion. However, the changes proposed today in the individual subparts reference the subpart E classifications to ensure that they conform with this similar framework. We are requesting comment on whether the individual provisions in the existing subparts are appropriately included in this framework or whether

there are subpart-specific reasons for an alternative scheme.

2. Reorganizing Sections To Separate Compliance Assurance Measures From Actual Standards

The NESHAP contain two major types of requirements: standards and delegable requirements. The standards are the essential requirements that implement EPA's authority under the Act to establish hazardous air pollutant (HAP) emission standards. These standards may be emission limitations (emission limits, operating limits, opacity limits, and visible emission limits) and/or work practice standards (design, equipment, work practices, and operational standards). The authority to approve alternatives to any of the promulgated standards must be retained by us. Requirements that are essential to ensuring that the standards are achieved as EPA intended, such as applicability requirements and compliance dates, are also retained.

The delegable requirements are also essential, but they offer some flexibility in their implementation. For example, you can approve minor and intermediate changes to testing, monitoring, reporting, and recordkeeping provisions, as long as they are at least as stringent as EPA requirements. For example, a source may request to inspect air pollution control equipment on a different schedule than that contained in the rule for source-specific reasons. An alternative inspection scheme may be accepted if the proposed schedule meets the intent of the original requirements to ensure the equipment is inspected regularly and repaired in a timely fashion.

In another instance, a source may wish to submit reports to coincide with the schedule of other required reports. A change in the schedule for submission of reports would be considered a minor change to reporting, and the authority to approve these types of minor changes is one which can be delegated to the S/L/T agencies.

In other cases, the S/L/T agency is given authority to make changes in the implementation of a requirement, but not to change the actual requirement itself. For example, some NESHAP require operation and maintenance plans. Here the S/L/T agency is given the authority to approve some changes in the content of the plan, but does not have the authority to waive the requirement that the plan must be created and followed. Additionally, some newly named operation and maintenance sections contain provisions which are similar to work practices, in that they can potentially affect emissions, such as the requirement to operate and maintain the source's equipment in keeping with good air pollution control practices, or the requirement to correct malfunctions as soon as practicable. You may not approve alternatives that are less stringent than the criteria outlined in the subpart. However, you may require more stringent provisions, such as not permitting excess emissions during malfunctions at all. Where an operations and maintenance plan is required, it usually allows the source considerable latitude in designing the plan, so long as the plan meets certain criteria. You may approve alternatives to the plan that are more stringent than the criteria listed, but you may not approve elimination of major criteria, such as specifying the process and control system monitoring equipment.

As a second example, most NESHAP include requirements to monitor certain specified control equipment operating parameters and to set enforceable operating limits for these same parameters based on data from the performance test. In this case, the S/L/T may be delegated the authority to approve changes to the ranges for the operating limits based on new performance test data and/or other relevant information submitted by the source. However, we retain the authority to approve modifications to requirements affecting which parameters are monitored (e.g., EPA would approve appropriate parameters to monitor for a control device not addressed in a NESHAP).

A more detailed discussion and additional examples of changes that may be made to the delegable requirements are presented in the preambles to the proposed and final subpart E rule (64 FR 1880) and (65 FR 55822).

In most NESHAP, the non-delegable authorities and the delegable authorities are separated into different sections of the rule. However, in a few NESHAP, these authorities are mixed within a single section; in the standard section in some NESHAP. In this case, we identified and separated out (where possible) the paragraphs that contain requirements for which you may not approve alternatives in the ''Implementation and enforcement'' section.

In other situations, the delegable and non-delegable authorities are not clearly separated into different sections or into different paragraphs within a standards section. In these cases, we have restructured the standards sections to separate the delegable and non-delegable authorities. This restructuring was accomplished by moving the delegable authorities to more appropriate sections of the rule, such as ''Monitoring requirements'' or ''Recordkeeping requirements'' sections. As a result, the ''Implementation and enforcement'' section more clearly shows which authorities you may not be delegated by simply listing the sections containing those authorities.

3. Proposing Minor Work Practices' Amendments To Allow Approval of Alternatives Without EPA Rulemaking

In some MACTs, provisions for which you could or should have the authority to approve alternatives are written in a way that precludes you from approving alternatives to these practices. Authority to approve alternatives to work practice standards or any other emission limitation established under section 112(d) or (h) of the Act cannot be delegated to you. However, some work practice requirements could be written more broadly to allow alternative practices to be implemented or these work practice requirements could be written to expressly state that you may approve alternative practices.

We have rewritten these work practice standards, where possible, to specifically state that you have the authority to approve equivalent or more stringent alternative compliance assurance measures. The sections containing these requirements are not listed as authorities retained by us in the implementation and enforcement section. These kinds of changes are necessary only for a small number of subparts.

An example of the need for broader flexibility in these requirements is presented in subpart GG, the Aerospace NESHAP. This subpart includes a requirement that solvent-laden rags be stored in closed containers with tight-fitting lids. This requirement prohibits the use of other methods for storing solvent-laden rags to prevent HAP emissions, such as storing them in a room that is vented to a control device. This practice may be as effective as the use of a closed container. However, as subpart GG is currently written, sources must apply to our Office of Air Quality Planning and Standards to have such an alternative work practice approved as equivalent. In turn, we must approve this alternative work practice through rulemaking. In this and other instances where this rulemaking procedure does not seem necessary, we have rephrased the work practice standard to specifically state that S/L/T agencies may determine whether alternatives are equivalent.

B. What Clarifications Have We Made to Individual Subparts?

1. Subpart F, National Emission Standards for Organic Hazardous Air Pollutants From the Synthetic Organic Chemical Manufacturing Industry

Subpart F contains the primary MACT standards of the Hazardous Organic NESHAP (HON). This regulation is one subpart in a group of subparts that make up the HON regulation, where each subpart regulates a group of emission points. These unit-specific subparts were written to collectively regulate the production of 300 defined organic chemicals, but have subsequently been used as a reference in other MACT regulations for some requirements. Therefore, for cross-referencing and delegation purposes, it is important for each of these subparts to have adequate separation of delegable versus non-delegable authorities and to have delegation provisions that are specific to each subpart.

In some instances, this regulation is not clear about separating delegable authorities. For example, § 63.104 contains monitoring requirements associated with leak detection and repair. However, these types of requirements actually constitute an integral part of the standard in leak detection and repair programs. The leak detection and repair requirements of subpart F fall into this category, so we are not proposing to delegate these authorities.

To clarify which authorities are delegated, we have replaced the existing delegation paragraph with ''Implementation and enforcement'' section language. These delegation provisions show that delegation of authority to approve alternatives is not given to S/L/T agencies for the requirements in §§ 63.100, 63.102, and 63.104, which contain applicability requirements, general standards, and standards for heat exchangers. In addition, this rule requires that affected sources meet specific requirements that are contained in other subparts. We have clarified that delegation of those requirements will occur according to the delegation provisions of the referenced subparts.

2. Subpart G, HON Standards for Process Vents, Storage Vessels, Transfer Operations, and Wastewater

Subpart G contains the HON MACT standards for process vents, storage vessels, transfer operations, and wastewater. As described above, it is important for cross-referencing and delegation purposes for each of the HON subparts to have adequate separation of compliance assurance measures from the standards and to have a delegation paragraph specific to the requirements of each subpart.

In some instances, this regulation does not adequately separate delegable versus non-delegable authorities. For example, §§ 63.133–63.139 contain inspection requirements and schedules for problem detection and repair. However, these types of requirements actually constitute an integral part of the standard in leak detection and repair programs. The leak detection and repair requirements of subpart G fall into this category, so we are not proposing to delegate these authorities.

This subpart does not currently contain its own delegation provisions. However, § 63.121 describes procedures that should be followed to request the use of alternative means of emissions limitation for storage vessels. Also, the delegation provisions in subpart F address delegation of some subpart G requirements. To clarify which authorities are delegated, we propose to add ''Implementation and enforcement'' section for delegation provisions to this subpart in a new section, § 63.153. This section, as proposed, indicates that delegation of authority to approve alternatives cannot be given to S/L/T agencies for the requirements in §§ 63.112–63.113, 63.119, 63.126, 63.132–63.140, and 63.148–63.149, which contain the emission standards; for the requirements in § 63.110 which contains the applicability requirements for this rule; and § 63.150(i)(1)–(4), which contains requirements to request permission to take credit for use of a control technology that is different in use or design from the reference control technology. To retain the intent of the original language of § 63.121, the new delegation paragraph cross-references the section identifying the procedures to follow in requesting an alternative means of emission limitation for storage vessels. In addition, this rule requires that affected sources meet specific requirements that are contained in other subparts. We have clarified that delegation of those requirements will occur according to the delegation provisions of the referenced subparts. Where subpart G requires that affected sources meet specific requirements that are contained in other subparts, but makes certain changes to those provisions, we have clarified that those provisions should be changed accordingly and then delegated according to the delegation provisions of the referenced subpart.

3. Subpart H, HON for Organic Hazardous Air Pollutants for Equipment Leaks

Subpart H is the MACT standard for equipment leaks at facilities regulated by the HON. As described above, it is important for cross-referencing and delegation purposes for each of the HON subparts to have adequate separation of compliance assurance measures from the standards and to have a delegation paragraph specific to the requirements of each subpart.

In some instances, this subpart does not adequately separate delegable versus non-delegable authorities. Several standards sections contain monitoring, inspection, recordkeeping, and reporting requirements associated with leak detection and repair. However, we believe that these types of requirements actually constitute an integral part of the standard in leak detection and repair programs. The leak detection and repair requirements of subpart H fall into that category, so we are not proposing to delegate these authorities.

This subpart does not have its own delegation provisions. To clarify which authorities are delegated, we have added ''Implementation and enforcement'' section in a new section, § 63.183. The section, as proposed, indicates that delegation of authority to approve alternatives cannot be given to S/L/T agencies for the requirements in §§ 63.160, 63.162–63.176, and 63.178–63.179, which contain the applicability provisions, emissions standards, standards for quality improvement programs, and provisions for alternative emission limitations. The reader is also instructed to follow the requirements of § 63.177 to request an alternative means of emission limitation for batch processes and enclosed-vented process units.

This subpart also requires affected sources to meet specific requirements that are contained in other subparts. We have clarified in the implementation and enforcement language that delegation of those requirements will occur according to the delegation provisions of the referenced subparts. Where subpart H requires that affected sources meet specific requirements that are contained in other subparts, but makes certain changes to those provisions, we have clarified that those provisions should be modified accordingly and then delegated according to the delegation provisions of the referenced subpart.

4. Subpart I, HON for Certain Processes Subject to the Negotiated Regulation for Equipment Leaks

Subpart I is the negotiated MACT standard for equipment leaks at facilities regulated by the HON. As described above, it is important for cross-referencing and delegation purposes for each of the HON subparts to have adequate separation of compliance assurance measures from the standards and to have a delegation paragraph specific to the requirements of each subpart.

In some instances, this subpart does not adequately separate compliance assurance measures from the standards. Section 63.192, ''Standard,'' contains performance test, recordkeeping, reporting, and other provisions that are considered delegable. Since the paragraphs containing these provisions are reasonably separable from the other standards in the section, we have indicated that the requirements in paragraphs § 63.192(c)–(d), (f)–(g), and (k)–(m) are not part of the standard and, thus, are delegable. Again, we are not changing the substance of these requirements and are, thus, accepting comments only on the delegation of them.

To clarify which authorities are delegated, we have replaced the existing delegation provisions' language with ''Implementation and enforcement'' section. The section, as proposed, indicates that delegation of authority to approve alternatives cannot be given to S/L/T agencies for the requirements in §§ 63.190 and 63.192(a)–(b), (e), (h)–(j), which contain the applicability provisions and emissions standards for this subpart. In addition, this subpart requires that affected sources meet specific requirements that are contained in other subparts. In the implementation and enforcement language, we have clarified that delegation of those requirements will occur according to the delegation provisions of the referenced subparts.

5. Subpart L, National Emission Standards for Coke Oven Batteries

Subpart L is the MACT standard for coke oven batteries. To clarify which authorities are delegated, we have replaced the existing delegation provisions' language with ''Implementation and enforcement'' section. In the delegation section, we retain the authorities in §§ 63.300 and 63.302–63.308, which contain the applicability provisions and emissions standards for by-product and nonrecovery coke oven batteries, compliance date extensions, coke oven doors equipped with sheds, work practice standards, bypass/bleeder stacks, and collecting mains.

The original delegation provisions contained language addressing failure of delegated agencies to carry out required inspections and tests. We retained this language in the revised delegation provisions, but added language to it and to § 63.609, ''Performance tests and procedures,'' explaining that the Administrator may also withdraw delegation of authority pursuant to the provisions of § 63.96.

6. Subpart M, National Perchloroethylene Air Emission Standards for Dry Cleaning Facilities

Subpart M is the MACT standard for perchloroethylene dry cleaning operations. This subpart does not separate delegable authorities from non-delegable ones in some instances. Section 63.322, ''Standards,'' contains inspection and repair requirements for equipment leaks in paragraphs (k)–(n), which are considered delegable monitoring authorities for this subpart. Since these paragraphs are reasonably separable from the other standards in the section, we have indicated that the requirements in paragraphs (k)–(n) are not considered part of the standard and, thus, are delegable authorities.

This subpart also does not currently contain a delegation section. To clarify which authorities are delegated, we have added the ''Implementation and enforcement'' section for the delegation provisions in a new section, § 63.326. This section, as proposed, indicates that delegation of authority to approve alternatives cannot be given to S/L/T agencies for the requirements in §§ 63.322(a)–(j), which contain the emissions and work practice standards for this rule. This section also shows that delegation of authority to approve alternatives is not given to S/L/T agencies for the applicability provisions in § 63.320. Finally, to retain the intent of the original language of § 63.325, which identifies procedures to demonstrate equivalence of an alternative control technology, the delegation provisions cross-reference the section that identifies procedures to follow in requesting use of an alternative control technology.

7. Subpart N, National Emission Standards for Chromium Emissions from Hard and Decorative Chromium Electroplating and Chromium Anodizing Tanks

Subpart N is the MACT standard for chromium electroplating. This subpart does not separate delegable requirements from non-delegable standards in one instance. Section § 63.342(f) contains operation and maintenance requirements, which are inappropriately termed ''work practice standards.'' We have replaced the term ''work practice standards'' with ''operation and maintenance practices'' to clarify that these authorities are delegable requirements rather than actual standards and made similar conforming changes elsewhere in the rule, as needed. Since these paragraphs are reasonably separable from the other standards in the section, we have indicated that the authorities in § 63.342(f) are not considered part of the standard and, thus, are delegable.

This rule does not currently contain delegation provisions. To clarify which authorities are delegated, we have added ''Implementation and enforcement'' section for the delegation provisions in a new section, § 63.348. This section, as proposed, indicates that delegation of authority to approve alternatives cannot be given to S/L/T agencies for the authorities in §§ 63.340 and 63.342(a)–(e) and (g), which contain the applicability provisions and the emission standards for hard chromium electroplating tanks, decorative chromium electroplating tanks using a chromic acid bath and chromium anodizing tanks, and decorative chromium electroplating tanks using a trivalent chromium bath.

8. Subpart O, Ethylene Oxide Emissions Standards for Sterilization Facilities

Subpart O is the MACT standard for the ethylene oxide sterilization industry. This subpart does not currently contain delegation provisions. To clarify which authorities are delegated, we have added ''Implementation and enforcement'' section for the delegation provisions in a new section, § 63.368. This section, as proposed, indicates that delegation of authority to approve alternatives cannot be given to S/L/T agencies for the requirements in §§ 63.360 and 63.362, which contain the applicability provisions and emission standards for this rule.

9. Subpart Q, National Emission Standards for Hazardous Air Pollutants for Industrial Process Cooling Towers

Subpart Q is the MACT standard for industrial cooling towers. This subpart does not currently contain delegation provisions. To clarify which authorities are delegable, we have added ''Implementation and enforcement'' section for the delegation provisions in a new section, § 63.407. This section, as proposed, indicates that delegation of authority to approve alternatives cannot

be given to S/L/T agencies for the authorities in §§ 63.400 and 63.402–63.403, which contain the applicability provisions, the emissions standard, and the compliance dates for this subpart.

10. Subpart R, National Emission Standards for Gasoline Distribution Facilities (Bulk Gasoline Terminals and Pipeline Breakout Stations)

Subpart R is the MACT standard for gasoline distribution. To clarify which authorities are delegated, we have replaced the existing delegation provisions' language with ''Implementation and enforcement'' section. This section, as proposed, indicates that delegation of authority to approve alternatives cannot be given to S/L/T agencies for the requirements in §§ 63.420 and 63.422–63.424, which contain the applicability provisions and emissions standards for loading racks, storage vessels, and equipment leaks.

To retain the intent of the original delegation provisions, the revised delegation section also retains delegation of the authority to approve major alternatives to the monitoring specified in § 63.427(a)(1)–(4) per § 63.427(a)(5), which contains provisions for monitoring an alternative operating parameter. To retain the intent of the original language of § 63.426, the revised delegation paragraph cross-references that section for procedures to follow in requesting an alternative means of emission limitation for storage vessels.

11. Subpart S, National Emission Standards for Hazardous Air Pollutants from the Pulp and Paper Industry

Subpart S is the MACT standard for pulp and paper production. This subpart does not separate delegable requirements from non-delegable standards in some instances. Section § 63.450, ''Standards for enclosures and closed-vent systems,'' contains monitoring and recording requirements for closed vent system bypass lines. We have removed the monitoring and recording authorities from § 63.450(d)(1) and placed them in § 63.454(e), ''Recordkeeping requirements.'' However, we added a reference in § 63.450(d)(1) that the provisions of § 63.454(e) must be followed.

This subpart contains delegation provisions that are not consistent with ''Implementation and enforcement'' section. To clarify which authorities are delegated, we have replaced the existing delegation provisions' language with ''Implementation and enforcement'' section. This section, as proposed, indicates that delegation of authority to approve alternatives cannot be given to S/L/T agencies for the requirements in §§ 63.440, 63.443–63.437 and 63.450, which contain the applicability provisions and the emissions standards for pulping systems, bleaching systems, kraft pulping process condensates, clean condensate alternatives, and enclosures and closed-vent systems. This subpart also requires that provisions of another subpart be followed. In the implementation and enforcement language, we have clarified that delegation of those requirements will occur according to the delegation provisions of the subpart that is referenced.

12. Subpart T, National Emission Standards for Halogenated Solvent Cleaning

Subpart T is the MACT standard for halogenated solvent cleaning. We have restructured the work practices in § 63.462 to give S/L/T agencies greater flexibility to approve alternatives that will still meet the intent of the standard. To create this flexibility we have added paragraph (e) to § 63.462. In addition, § 63.463, ''Batch vapor and in-line cleaning machine standards,'' contains recordkeeping provisions in § 63.463(e)(2)(ix)(B). We have restructured this section to refer to § 63.467 ''Recordkeeping requirements,'' for these provisions in § 63.467(a)(6).

This subpart also does not currently contain delegation provisions. To clarify which authorities are delegated, we added ''Implementation and enforcement'' section in a new section, 63.470. This section, as proposed, indicates that delegation of authority to approve alternatives cannot be given to S/L/T agencies for the requirements in §§ 63.460, 63.462(a)–(d), and 63.463–63.464, which contain the applicability provisions and the emissions standards for batch cold cleaning machines and batch vapor and in-line cleaning machines.

Section 63.469 describes procedures that must be followed to request the use of alternative equipment or an alternative work practice. Section 63.460(f) retains delegation of this section to the Administrator and also retains § 63.463(d)(9), which requires the owner or operator to maintain each solvent cleaning machine as recommended by the manufacturer or to use alternative practices that have been approved by the Administrator. The delegation provisions added in § 63.470 cross-reference § 63.469 for procedures to follow in requesting an alternative means of emission limitation. We have removed § 63.460(f), since the requirements of that paragraph are now listed in § 63.470 as authorities that are not delegated.

13. Subpart U, National Emission Standards for Hazardous Air Pollutant Emissions: Group I Polymers and Resins

Subpart U is the MACT standard for group I polymers and resins. This subpart does not separate compliance assurance measures from the standards in some instances. Several standards sections contain provisions that are considered delegable requirements. Since the paragraphs containing these delegable provisions are reasonably separable from the standards in the section, we have indicated in the delegation provisions that the requirements in paragraphs §§ 63.483(d), 63.485(l), (t) and (v), 63.488(b)(5)(i)–(iii), 63.500(a)(4)–(5), (c)–(e), and 63.502(g)–(i), (j), and (n) are not considered part of the standard and, thus, are authorities that may be delegated to S/L/T agencies.

This subpart also does not currently contain delegation provisions. To clarify which authorities are delegable, we have added ''Implementation and enforcement'' section for the delegation provisions in a new section, § 63.507. This section, as proposed, indicates that delegation of authority to approve alternatives cannot be given to S/L/T agencies for the requirements in §§ 63.480–63.481, 63.483(a)–(c), 63.484, 63.485(a)–(k), (m)–(s), (u), 63.486–63.487, 63.488(a), (b)(1)–(4), (5)(iv)–(v), (6)–(7), (c)–(i), 63.493–63.494, 63.500(a)(1)–(3), (b), 63.501, and 63.502(a)–(f), (i), (k)–(m), and 63.503, which contain applicability provisions, compliance dates, the emission standards, and the emissions averaging provisions for this subpart. In addition, this subpart requires that affected sources meet specific requirements that are contained in other subparts. In the implementation and enforcement language, we have clarified that delegation of those requirements will occur according to the delegation provisions of the referenced subparts. Where subpart U requires that affected sources meet specific requirements that are contained in other subparts, but makes certain changes to those provisions, we have clarified that those provisions should be changed accordingly and then delegated according to the delegation provisions of the referenced subpart. For example, subpart U references subpart G, §§ 63.113–63.116 but slightly changes these requirements. We clarify in this rulemaking that although subpart U changes these specific subpart G requirements for the purposes of subpart U, the delegation of these referenced

requirements follow the original delegation of subpart G.

14. Subpart W, National Emission Standards for Hazardous Air Pollutants for Epoxy Resins Production and Non-Nylon Polyamides Production

Subpart W is the group II polymers and resins MACT for epoxy resins and non-nylon polyamide production. This subpart does not currently contain delegation provisions. To clarify which authorities are delegable, we have added ''Implementation and enforcement'' section for the delegation provisions in a new section, § 63.529. This section, as proposed, indicates that delegation of authority to approve alternatives cannot be given to S/L/T agencies for the requirements in §§ 63.520, 63.523 and 63.524, which contain the applicability provisions and the emissions standards for basic liquid and wet strength resins. In addition, this subpart requires provisions of another subpart, subpart H, to be followed. We have clarified that delegation of the requirements from the other subpart, subpart H, will occur according to the delegation provisions of the subpart that is referenced.

15. Subpart X, National Emissions Standards for Hazardous Air Pollutants From Secondary Lead Smelting

Subpart X is the MACT standard for secondary lead smelting. We have restructured the work practices in § 63.545 to give S/L/T agencies greater flexibility in approving alternatives that still meet the intent of the standard by adding a paragraph to explain that either the Administrator or delegated S/L/T authorities may approve alternatives to the fugitive dust reduction practices in § 63.545(c).

This subpart also does not currently contain delegation provisions. To clarify which authorities are delegated, we have added the ''Implementation and enforcement'' section for the delegation provisions in a new section, § 63.551. This section, as proposed, indicates that delegation of authority to approve alternatives cannot be given to S/L/T agencies for the requirements in §§ 63.541, and 63.543–63.545(a)–(e), which contain the applicability provisions and emissions standards for process sources, process fugitive sources, and fugitive dust sources.

16. Subpart Y, National Emission Standards for Marine Tank Vessel Loading Operations

Subpart Y is the MACT standard for marine tank vessel loading operations. This subpart does not separate delegable requirements from non-delegable standards in some instances. Section 63.562, ''Standards,'' contains requirements for an operation and maintenance plan in § 63.562(e) and its associated recordkeeping and reporting provisions are contained in § 63.562(d)(3), which are delegable authorities. We have removed the reporting and recordkeeping requirements from § 63.562 by deleting paragraph § 63.562(d)(3) and added those provisions to § 63.567, ''Reporting and recordkeeping,'' by adding paragraph § 63.567(l). Since paragraph (e) is reasonably separable from the other standards in § 63.562, we have indicated in the implementation and enforcement provisions that the requirements in this paragraph are not considered part of the standard and, thus, are delegable.

This subpart also does not currently contain delegation provisions. To clarify which authorities are delegated, we have added the ''Implementation and enforcement'' section for the delegation provisions in a new section, § 63.568. This section, as proposed, indicates that delegation of authority to approve alternatives cannot be given to S/L/T agencies for the requirements in §§ 63.560 and 63.562(a)–(d), which contain the applicability provisions and emission standards for this rule.

17. Subpart AA, National Emission Standards for Hazardous Air Pollutants From Phosphoric Acid Manufacturing Plants

Subpart AA is the MACT standard for the phosphoric acid manufacturing industry. This subpart does not currently contain delegation provisions. To clarify which authorities are delegated, we have added the ''Implementation and enforcement'' section for the delegation provisions in a new section, § 63.611. This section, as proposed, indicates that delegation of authority to approve alternatives cannot be given to S/L/T agencies for the requirements in §§ 63.600, 63.602–63.604, and 63.609–63.610, which are the applicability provisions, the emission standards for existing and new sources and the operating requirements for wet scrubbing emission control systems, the compliance dates, and other requirements for this subpart.

18. Subpart BB, National Emission Standards for Hazardous Air Pollutants from Phosphate Fertilizers Production Plants

Subpart BB is the MACT standard for phosphate fertilizers production. This subpart does not currently contain delegation provisions. To clarify which authorities are delegated, we have added the ''Implementation and enforcement'' section for the delegation provisions in a new section, § 63.632. This section, as proposed, indicates that delegation of authority to approve alternatives cannot be given to S/L/T agencies for the requirements in §§ 63.620, 63.622–63.624, and 63.629–63.631, which contain the applicability provisions, the emissions standards for existing and new sources, the operating requirements for wet scrubbing emission control systems, and the compliance dates and other requirements for this subpart.

19. Subpart CC, National Emission Standards for Hazardous Air Pollutants from Petroleum Refineries

Subpart CC is the MACT standard for petroleum refineries. This subpart does not separate delegable requirements from non-delegable standards in some instances. Section 63.642, ''General standards,'' contains recordkeeping, reporting, and other delegable requirements in paragraphs (a)–(f) and (m). Since these paragraphs are reasonably separable from the standards in the section, we have indicated that the requirements in these paragraphs are not considered part of the standard and, thus, are delegable.

This subpart also does not currently contain delegation provisions. To clarify which authorities are delegated, we have added the ''Implementation and enforcement'' section for the delegation provisions in a new section, § 63.655. This section, as proposed, indicates that delegation of authority to approve alternatives cannot be given to S/L/Ts for the requirements in §§ 63.640, 63.642(a),

(g)–(l), 63.643, 63.646–63.648, and 63.649–63.652, which contain applicability provisions, standards for applicability determinations, process vents, storage vessels, wastewater, equipment leaks, connectors in gas/vapor and light liquid service, gasoline loading racks, marine vessel tank loading operations, and emissions averaging provisions. In addition, this subpart requires that affected sources meet specific requirements that are contained in other subparts. In the implementation and enforcement language, we have clarified that delegation of those requirements will occur according to the delegation provisions of the referenced subparts. Where subpart CC requires that affected sources meet specific requirements that are contained in other subparts, but makes certain changes to those provisions, we have clarified that those provisions should be changed accordingly and then delegated according to the delegation provisions

of the referenced subpart. For example, subpart CC references subpart H, § 63.1182(c) but slightly changes these requirements. We clarify in this rulemaking that although subpart CC changes these specific subpart H requirements for the purposes of subpart CC, the delegation of these referenced requirements follow the original delegation of subpart H.

20. Subpart DD, National Emission Standards for Hazardous Air Pollutants From Off-Site Waste and Recovery Operations

Subpart DD is the MACT standard for offsite waste and recovery operations. This regulation is the primary subpart in a group of subparts that make up the off-site waste and recovery operations regulation. The subsequent subparts each regulate a group of emission points, which were written so that new rules for other MACT source categories can reference these subparts for some requirements. Since these subparts reference subpart DD for some authorities, it is important that subpart DD separates delegable requirements from the non-delegable standards and contains delegation provisions that delegate the appropriate authorities.

Subpart DD does not separate delegable requirements from non-delegable authorities in some instances. Section 63.684, ''Standards for off-site material treatment,'' contains monitoring requirements, and § 63.693, ''Standards for closed-vent systems and control devices,'' contains monitoring and inspection requirements, which are delegable authorities. We have rephrased the language of § 63.684(e)(1) to remove the monitoring and reporting requirements from that section. Those requirements were added to § 63.695, ''Inspection and monitoring requirements'' in § 63.695(e), with an introductory paragraph to match the format of the section in § 63.695(a)(4). The continuous monitoring requirements and visual inspection requirements in § 63.693(b)(4)(i) and § 63.693(c)(2)(ii) were also removed and placed in § 63.695(c)(1)(ii)(C) and (D).

To clarify which authorities can be delegated, we have replaced the existing delegation provisions' language with the ''Implementation and enforcement'' section. This section, as proposed, indicates that delegation of authority to approve alternatives cannot be given to S/L/T agencies for the requirements in §§ 63.680, 63.684–63.691, and 63.693, which contain applicability provisions and the standards for off-site material treatment, tanks, oil-water and organic-water separators, surface impoundments, containers, transfer systems, process vents, equipment leaks, closed-vent systems, and control devices. In addition, this rule requires that affected sources meet specific requirements that are contained in other subparts. In the implementation and enforcement language, we have clarified that delegation of those requirements will occur according to the delegation provisions of the subpart that is referenced.

21. Subpart EE, National Emission Standards for Magnetic Tape Manufacturing Operations

Subpart EE is the MACT standard for the magnetic tape manufacturing industry. To clarify which authorities are delegated, we have replaced the existing delegation paragraph with the ''Implementation and enforcement'' section. This section, as proposed, indicates that delegation of authority to approve alternatives cannot be given to S/L/T agencies for the requirements in § 63.701 and § 63.703, which contain the applicability provisions and the emission standards for this rule.

22. Subpart GG, National Emission Standards for Aerospace Manufacturing and Rework Facilities

Subpart GG is the MACT standard for aerospace manufacturing and rework facilities. We have restructured the work practices in § 63.744 to give S/L/T agencies greater flexibility in approving alternatives that still meet the intent of the standard by adding a paragraph to explain that either the Administrator or delegated State, local, or tribal authorities may approve alternatives to the cleaning operations measures in § 63.744(a).

In addition, this subpart does not contain delegation provisions. To clarify which authorities are delegated, we have added the ''Implementation and enforcement'' section for the delegation provisions in a new section, § 63.759. This section, as proposed, indicates that delegation of authority to approve alternatives cannot be given to S/L/T agencies for the requirements in §§ 63.741, 63.743, 63.744(a)(1)–(3), 63.744(b)–(e), 63.745–63.748, and 63.749(a), which contain the applicability provisions, cleaning, primer and top-coat application, depainting, chemical milling maskant application, and waste handling and storage standards, and the compliance dates for this rule.

23. Subpart HH, National Emission Standards for Hazardous Air Pollutants From Oil and Natural Gas Production Facilities

Subpart HH is the MACT standard for oil and natural gas production facilities. This subpart does not separate delegable from non-delegable authorities in some instances. A standards section, § 63.771, ''Control equipment requirements,'' contains inspection and monitoring requirements, which are considered delegable requirements. We have removed the language for inspection and monitoring requirements from § 63.771 and added it to § 63.773, ''Inspection and monitoring requirements,'' in § 63.773(c)(2)(iv).

To clarify which authorities are delegated, we have replaced the existing delegation provisions' language with the ''Implementation and enforcement'' section. This section, as proposed, indicates that delegation of authority to approve alternatives cannot be given to S/L/T agencies for the requirements in §§ 63.760, 63.765–63.766, 63.769, and 63.771, which contain the applicability provisions and the emission standards for glycol dehydration unit process vents, storage vessels, equipment leaks, and control equipment requirements. We did not reserve § 63.764, ''General Standards,'' which does not contain actual standards, but provides a guide to the applicable requirements in other sections of the subpart.

This subpart also contains a section, § 63.777, which describes procedures that should be followed to obtain approval of an alternative means of emission limitation. To retain the intent of the original language of § 63.777, the delegation provisions also reserve that section for procedures to follow in requesting an alternative means of emission limitation.

24. Subpart II, National Emission Standards for Shipbuilding and Ship Repair (Surface Coating)

Subpart II is the MACT standard for shipbuilding and ship repair. This subpart currently does not have a delegation section. To clarify which authorities are delegated, we have added the ''Implementation and enforcement'' section for the delegation provisions in a new section, § 63.789. This section, as proposed, indicates that delegation of authority to approve alternatives cannot be given to S/L/T agencies for the requirements in §§ 63.780–63.781 and 63.783–63.784, which contain the applicability provisions, emission standards, and compliance dates for this rule.

25. Subpart JJ, National Emission Standards for Wood Furniture Manufacturing Operations

Subpart JJ is the MACT standard for wood furniture manufacturing. This subpart does not separate delegable requirements from the standards in some instances. Section 63.803, ''Work practice standards,'' contains requirements for an inspection and maintenance plan in § 63.803(c)(1)–(4), which should be delegable. Because these paragraphs are reasonably separable from the other standards in the section, we have indicated that the requirements of those paragraphs are not considered part of the standard and, thus, are delegable. However, we renumbered the paragraphs in that section so the introductory paragraph of (c) is now (c)(1), and the subsequent paragraphs were renumbered as (c)(2)–(5) to accommodate that change.

To clarify which authorities are delegated, we have replaced the existing delegation provisions' language with the ''Implementation and enforcement'' section. This section, as proposed, indicates that delegation of authority to approve alternatives cannot be given to S/L/T agencies for the requirements in §§ 63.802 and 63.803(a)–(b), (c)(1), and (d)–(l), which contain the standards for this rule. This section also shows that delegation of authority to approve alternatives cannot be given to S/L/T agencies for the applicability provisions in § 63.800. To retain the intent of the original delegation provisions in § 63.808, the revised delegation section also reserves the monitoring and compliance assurance measures and test methods in §§ 63.804(f)(4)(iv)(D) and (E), 63.804(g)(4)(iii)(C), 63.804(g)(4)(vi), 63.804(g)(6)(vi), 63.805(a), 63.805(d)(2)(v), and 63.805(e)(1).

26. Subpart KK, National Emission Standards for the Printing and Publishing Industry

Subpart KK is the MACT standard for the printing and publishing industry. To clarify which authorities are delegated, we have replaced the existing delegation provisions' language with the ''Implementation and enforcement'' section. This section, as proposed, indicates that delegation of authority to approve alternatives cannot be given to S/L/T agencies for the requirements in §§ 63.820–63.821 and 63.824–63.826. These sections contain applicability provisions, compliance dates, standards for publication rotogravure printing and product and packaging rotogravure, and wide-web flexographic printing. We are not reserving § 63.823, which only indicates which general provisions requirements apply to subpart KK. As part of the implementation and enforcement language, we clarify that the authority to approve major alternatives to test methods is not delegated. In addition, to retain the intent of the original delegation paragraph language of § 63.831, the revised delegation provisions also clarify that the authority is not given to approve any alternatives to the test methods specified in § 63.827(b) and (c).

27. Subpart LL, National Emission Standards for Hazardous Air Pollutants for Primary Aluminum Reduction Plants

Subpart LL is the MACT standard for primary aluminum production plants. This subpart does not separate the delegable requirements from non-delegable authorities in some instances. Section 63.845, ''Incorporation of new source performance standards for potroom groups,'' contains requirements for applicability determinations, reporting requirements, and criteria to use to determine emissions quantities, which are not considered standards for this regulation. Since these measures are in paragraphs reasonably separable from the standards in the section, we have indicated that paragraphs § 63.845(a) and (f)–(g) are not considered part of the standard and are, thus, delegable.

To clarify which authorities are delegated, we have replaced the existing delegation provisions' language with the ''Implementation and enforcement'' section. This section now shows that delegation of authority to approve alternatives cannot be given to S/L/T agencies for the requirements in §§ 63.840, 63.843–63.844, 63.845(b)–(e), (h)–(i), and 63.846 which contain the applicability provisions, emission standards for existing and new or reconstructed sources, standards for incorporation of new source performance standards for potroom groups, and emissions averaging provisions.

28. Subpart OO, National Emission Standards for Tanks—Level 1

Subpart OO is the MACT national emission standard for level 1 tanks. This regulation is one subpart in a group of subparts that make up the off-site waste and recovery operations regulation, where each subpart regulates a specific group of emission points. These unit-specific subparts were written so that new rules for other MACT source categories can reference these subparts for some requirements. Therefore, it is important for each of these subparts to contain delegation provisions specific to the requirements of that subpart. Since this subpart does not contain delegation provisions, we have added the ''Implementation and enforcement'' section for the delegation provisions in a new section, § 63.908. This section, as proposed, indicates that delegation of authority to approve alternatives cannot be given to S/L/T agencies for the requirements in §§ 63.900 and 63.902, which contain the applicability provisions and emissions standards for tanks with fixed roofs.

29. Subpart PP, National Emission Standards for Containers

Subpart PP is the MACT national emission standard for containers. This regulation is one subpart in a group of subparts that make up the off-site waste and recovery operations regulation, where each subpart regulates a specific group of emission points. As explained above, it is important for each of these subparts to have delegation provisions specific to the requirements of that subpart. Since this subpart does not contain delegation provisions, we have added the ''Implementation and enforcement'' section for the delegation provisions in a new section, § 63.929. This section, as proposed, indicates that delegation of authority to approve alternatives cannot be given to S/L/T agencies for the requirements in §§ 63.920 and 63.922–63.924, which contain the applicability provisions and container level 1, 2, and 3 control standards.

In addition, this subpart requires that affected sources meet specific requirements that are contained in other subparts. In the implementation and enforcement language, we have clarified that delegation of those requirements will occur according to the delegation paragraph of the subpart that is referenced.

30. Subpart QQ, National Emission Standards for Surface Impoundments

Subpart QQ is the MACT national emission standard for surface impoundments. This regulation is one subpart in a group of subparts that make up the off-site waste and recovery operations regulation, where each subpart regulates a specific group of emission points. As explained above, it is important for each of these subparts to have delegation provisions specific to the requirements of that subpart. Since this subpart does not contain delegation provisions, we have added the ''Implementation and enforcement'' section for the delegation provisions in a new section, § 63.949. This section, as proposed, indicates that delegation of authority to approve alternatives cannot be given to S/L/T agencies for the requirements in §§ 63.940, and 63.942–

63.943, which contain the applicability provisions and emission standards for surface impoundments vented to control devices and for those with floating membrane covers. In addition, this rule requires provisions of subpart DD to be followed. In the implementation and enforcement language, we have clarified that delegation of those requirements will occur according to the delegation paragraph of subpart DD.

31. Subpart RR, National Emission Standards for Individual Drain Systems

Subpart RR is the MACT national emission standard for individual drain systems. This regulation is one subpart in a group of subparts that make up the off-site waste and recovery operations regulation, where each subpart regulates a specific group of emission points. As explained above, it is important for each of these subparts to have delegation provisions specific to the requirements of that subpart. Since this subpart does not have a delegation section, we have added the ''Implementation and enforcement'' section for the delegation provisions in a new section, § 63.967. This section, as proposed, indicates that delegation of authority to approve alternatives cannot be given to S/L/T agencies for the requirements in §§ 63.960 and 63.962, which contain the applicability provisions and emissions standards for this subpart. In addition, this subpart requires provisions of subpart DD to be followed. In the ''Implementation and enforcement'' section, we have clarified that delegation of those requirements will occur according to the delegation provisions of subpart DD.

32. Subpart VV, National Emission Standards for Oil-Water Separators and Organic-Water Separators

Subpart VV is the MACT national emission standard for oil-water and organic-water separators. This regulation is one subpart in a group of subparts that make up the off-site waste and recovery operations regulation, where each subpart regulates a specific group of emission points. As explained above, it is important for each of these subparts to have delegation provisions specific to the requirements of that subpart. Since, this subpart does not have a delegation section, we have added the ''Implementation and enforcement'' section for the delegation provisions in a new section, § 63.1050. This section, as proposed, indicates that delegation of authority to approve alternatives cannot be given to S/L/T agencies for the requirements in §§ 63.1040 and 63.1042–63.1044, which contain the applicability provisions, the emissions standards for separators with fixed and floating roofs, and those vented to a control device. In addition, this subpart requires provisions of subpart DD to be followed. In the implementation and enforcement language, we have clarified that delegation of those requirements will occur according to the delegation provisions of subpart DD.

33. Subpart CCC, National Emission Standards for Hazardous Air Pollutants for Steel Pickling—HCl Process Facilities and Hydrochloric Acid Regeneration Plants

Subpart CCC is the MACT standard for steel pickling—HCl process facilities and hydrochloric acid regeneration plants. To clarify which authorities are delegated, we have replaced the existing delegation provisions' language with the ''Implementation and enforcement'' section. This section, as proposed, indicates that delegation of authority to approve alternatives cannot be given to S/L/T agencies for the requirements in §§ 63.1155 and 63.1157–1159, which contain the applicability provisions and the emissions, operational, and equipment standards for existing, new, and reconstructed sources.

To retain the intent of the original delegation paragraph language, the revised delegation provisions reserve approval of alternative measurement methods for HCl and Cl_2 to those specified in § 63.1161(d)(1), reserve approval of alternative monitoring requirements to those specified in §§ 63.1162(a)(2)–(5) and 63.1162(b)(1)–(3), reserve the authority to grant a waiver of recordkeeping requirements specified in § 63.1165, and expressly delegate approval of an alternative schedule for conducting performance tests to the requirement specified in § 63.1162(a)(1).

34. Subpart DDD, National Emission Standards for Hazardous Air Pollutants for Mineral Wool Production

Subpart DDD is the MACT standard for mineral wool production. This subpart does not currently contain delegation provisions. To clarify which authorities are delegated, we have replaced the existing delegation provisions' language with the ''Implementation and enforcement'' section. This section, as proposed, indicates that delegation of authority to approve alternatives cannot be given to S/L/T agencies for the requirements in §§ 63.1177–63.1179, which contain the applicability provisions and the emission standards for cupolas and curing ovens.

35. Subpart EEE, National Emission Standards for Hazardous Air Pollutants From Hazardous Waste Combustors

Subpart EEE is the MACT standard for hazardous waste combustors. This subpart does not currently have a delegation section. To clarify which authorities are delegated, we have added the ''Implementation and enforcement'' section for the delegation provisions in a new section, § 63.1214. The delegation provisions show that delegation of authority to approve alternatives cannot be given to S/L/T agencies for the requirements in §§ 63.1200 and 63.1203–63.1205, which contain the applicability provisions and emission standards for this subpart.

36. Subpart GGG, National Emission Standards for Pharmaceuticals Production

To clarify which authorities are delegated, we have replaced the existing delegation provisions' language with the ''Implementation and enforcement'' section. This section, as proposed, indicates that delegation of authority to approve alternatives cannot be given to S/L/T agencies for the requirements in §§ 63.1250 and 63.1252–63.1256, which contain the applicability provisions and emission standards for this subpart. In addition, this subpart requires that affected sources meet specific requirements that are contained in other subparts. In the implementation and enforcement language, we have clarified that delegation of those requirements will occur according to the delegation provisions of the referenced subparts.

37. Subpart HHH, National Emission Standards for Hazardous Air Pollutants From Natural Gas Transmission and Storage Facilities

Subpart HHH is the MACT standard for natural gas transmission and storage. This subpart does not separate delegable from non-delegable authorities in some instances. The standards section, § 63.1281, ''Control equipment requirements,'' contains inspection and monitoring requirements, which are considered delegable requirements. To separate these delegable requirements from non-delegable authorities in that section, we have removed the language for inspection and monitoring requirements from § 63.1281 and added it to § 63.1283, ''Inspection and monitoring requirements,'' in paragraph (c)(2)(iii).

To clarify which authorities are delegated, we have replaced the existing delegation provisions' language with the ''Implementation and enforcement'' section. This section, as proposed,

indicates that delegation of authority to approve alternatives cannot be given to S/L/T agencies for the requirements in §§ 63.1270, 63.1275, and 63.1281, which contain applicability provisions, glycol dehydration unit process vent standards, and control equipment requirements.

In addition, subpart HHH contains a section, § 63.1287, which describes procedures that should be followed for approval of an alternative means of emission limitation. To retain the intent of the original language of § 63.1287, the delegation provisions also reserve that section.

38. Subpart III, National Emission Standards for Hazardous Air Pollutants for Flexible Polyurethane Foam Production

Subpart III is the MACT standard for flexible polyurethane foam production. To clarify which authorities are delegated, we have replaced the existing delegation provisions' language with the ''Implementation and enforcement'' section. This section, as proposed, indicates that delegation of authority to approve alternatives cannot be given to S/L/T agencies for the requirements in §§ 63.1920 and 63.1293–63.1301, and 63.1305(d) which contain the applicability provisions, emission standards for this rule, and provisions for approval of an alternative means of emission limitation.

39. Subpart JJJ, National Emission Standards for Hazardous Air Pollutant Emissions: Group IV Polymers and Resins

Subpart JJJ is the MACT standard for Group IV polymers and resins. This subpart currently does not contain delegation provisions. To clarify which authorities are delegated, we have added the ''Implementation and enforcement'' section for the delegation provisions in a new section, § 63.1336. This section, as proposed, indicates that delegation of authority to approve alternatives cannot be given to S/L/T agencies for the requirements in §§ 63.1310–63.1311, 63.1313–63.1316, 63.1321–63.1323, and 63.1328–63.1332, which contain the applicability provisions, compliance dates, the emissions standards, and the emissions averaging provisions for this subpart.

This subpart also requires that provisions of another subpart be followed, with slight changes. In the implementation and enforcement delegation provisions language, we have clarified that those requirements should be changed as directed, and then delegation of those requirements will occur according to the delegation provisions of the subpart that is referenced. For example, subpart JJJ references subpart H, §§ 63.182(a)(2) and 63.182(c) but slightly changes these requirements. We clarify in this rulemaking that although subpart JJJ changes these specific subpart H requirements for the purposes of subpart JJJ, the delegation of these referenced requirements follow the original delegation of subpart H.

40. Subpart LLL, National Emission Standards for Hazardous Air Pollutants From the Portland Cement Manufacturing Industry

Subpart LLL is the MACT standard for portland cement production. To clarify which authorities are delegated, we have replaced the existing delegation provisions' language with the ''Implementation and enforcement'' section. This section, as proposed, indicates that delegation of authority to approve alternatives cannot be given to S/L/T agencies for the requirements in §§ 63.1340, and 63.1343–63.1348, which contain the applicability provisions, emission standards and operating limits for kiln and in-line kiln/raw mills, and the standards for clinker coolers, new and reconstructed raw material dryers, raw and finish mills, and other sources.

41. Subpart MMM, National Emission Standards for Hazardous Air Pollutants for Pesticide Active Ingredient Production

Subpart MMM is the MACT standard for pesticide active ingredient production. This subpart does not separate delegable requirements from the non-delegable standards in some instances. Section 63.1362, ''Standards,'' contains delegable monitoring requirements for closed vent systems in § 63.1362(j). We have restructured this section to remove the specific monitoring requirements and placed them in § 63.1366, ''Monitoring and inspection requirements,'' in paragraphs § 63.1366(b)(1)(xiii)(B) and (C).

To clarify which authorities are delegated, we have replaced the existing delegation provisions' language with the ''Implementation and enforcement'' section. This section, as proposed, indicates that delegation of authority to approve alternatives cannot be given to S/L/T agencies for the requirements in §§ 63.1360 and 63.1362–63.1363, which contain the applicability provisions, emission standards, and standards for equipment leaks. This rule also requires that provisions of another subpart be followed, with slight changes. In the ''Implementation and enforcement'' section, we have clarified that those requirements should be changed as directed, and then delegation of those requirements will occur according to the delegation provisions of the subpart that is referenced.

42. Subpart NNN, National Emission Standards for Hazardous Air Pollutants for Wool Fiberglass Manufacturing

Subpart NNN is the MACT standard for wool fiberglass manufacturing. This subpart does not have a delegation paragraph. To clarify which authorities are delegated, we have added the ''Implementation and enforcement'' section for the delegation provision in a new section, § 63.1388. This section, as proposed, indicates that delegation of authority to approve alternatives cannot be given to S/L/T agencies for the requirements in §§ 63.1380 and 63.1382, which contain the applicability provisions and the emissions standards for this subpart.

43. Subpart OOO, National Emission Standards for Hazardous Air Pollutants for Amino/Phenolic Resins Production

Subpart OOO is the MACT standard for Group III polymers and resins: amino and phenolic resins. To clarify which authorities are delegated, we have replaced the existing delegation provisions' language with the ''Implementation and enforcement'' section. This section, as proposed, indicates that delegation of authority to approve alternatives cannot be given to S/L/T agencies for the requirements in §§ 63.1400 and 63.1404–63.1410, which contain the applicability provisions and the emission standards for process vents, storage vessels, heat exchangers, and equipment leaks. In addition, this rule requires that affected sources meet specific requirements that are contained in other subparts. In the implementation and enforcement language, we have clarified that delegation of those requirements will occur according to the delegation provisions of the referenced subparts. Where subpart OOO requires that affected sources meet specific requirements that are contained in other subparts, but makes certain changes to those provisions, we have clarified that those provisions should be changed accordingly and then delegated according to the delegation provisions of the referenced subpart.

44. Subpart PPP, National Emission Standards for Hazardous Air Pollutant Emissions for Polyether Polyols Production

Subpart PPP is the MACT standard for polyether polyols production. To clarify which authorities are delegated, we have replaced the existing delegation

provisions' language with the ''Implementation and enforcement'' section. This section, as proposed, indicates that delegation of authority to approve alternatives cannot be given to S/L/T agencies for the requirements in §§ 63.1420, 63.1422, 63.1424–63.1428 and 63.1432–63.1436, which contain the applicability provisions, compliance dates, and emission standards for this subpart. In addition, this rule requires that affected sources meet specific requirements that are contained in other subparts. In the implementation and enforcement language, we have clarified that delegation of those requirements will occur according to the delegation provisions of the referenced subparts. Where subpart PPP requires that affected sources meet specific requirements that are contained in other subparts, but makes certain changes to those provisions, we have clarified that those provisions should be modified accordingly and then delegated according to the delegation provisions of the referenced subpart.

45. Subpart RRR, National Emission Standards for Secondary Aluminum Production

Subpart RRR is the MACT standard for secondary aluminum production. To clarify which authorities are delegated, we have replaced the existing delegation provisions' language with the ''Implementation and enforcement'' section. This section, as proposed, indicates that delegation of authority to approve alternatives cannot be given to S/L/T agencies for the requirements in §§ 63.1500 and 63.1505–63.1506, which contain the applicability provisions and the emission standards and operating requirements for this subpart.

46. Subpart TTT, National Emission Standards for Hazardous Air Pollutants for Primary Lead Smelting

Subpart TTT is the MACT standard for primary lead smelting. This subpart does not separate the delegable from the non-delegable authorities in some instances. Section 63.1543, ''Standards for process and process fugitive sources,'' contains compliance testing requirements in paragraphs (d)–(e), which are considered delegable requirements. Since these paragraphs are reasonably separable from the other standards in the section, we have indicated that the requirements in paragraphs (d)–(e) are not considered part of the standard and, thus, are delegable.

To clarify which authorities are delegated, we have replaced the existing delegation provisions' language with the ''Implementation and enforcement'' section. This section, as proposed, indicates that delegation of authority to approve alternatives cannot be given to S/L/T agencies for the requirements in §§ 63.1541, 63.1543(a)–(c), (f)–(g), and 63.1544, which contain the applicability provisions and emission standards for process and process fugitive sources, and fugitive dust sources.

47. Subpart VVV, National Emission Standards for Hazardous Air Pollutants: Publicly Owned Treatment Works

Subpart VVV is the MACT standard for publicly owned treatment works. To clarify which authorities are delegated, we have replaced the existing delegation provisions' language with the ''Implementation and enforcement'' section. This section, as proposed, indicates that delegation of authority to approve alternatives cannot be given to S/L/T agencies for the requirements in §§ 63.1580, 63.1583, and 63.1586, which contain the applicability provisions and the emissions and control standards for industrial and non-industrial publicly owned treatment works.

48. Subpart XXX, National Emission Standards for Hazardous Air Pollutants for Ferroalloys Production: Ferromanganese and Silicomanganese

Subpart XXX is the MACT standard for ferroalloys production. To clarify which authorities are delegated, we have replaced the existing delegation provisions' language with the ''Implementation and enforcement'' section. This section, as proposed, indicates that delegation of authority to approve alternatives cannot be given to S/L/T agencies for the requirements in §§ 63.1650 and 63.1652–63.1654, which contain the applicability provisions, the opacity and non-opacity emission standards, and the operational and work practice standards for this rule.

III. Administrative Requirements

A. Docket

The docket for this regulatory action is docket number A–2000–57. The principal purposes of the docket are:

(1) To allow interested parties a means to identify and locate documents so that they can effectively participate in the rulemaking process; and (2) to serve as the record in case of judicial review (except for interagency review materials) (Section 307(d)(7)(A) of the Act). The docket is available for public inspection at the EPA's Air and Radiation Docket and Information Center, the location of which is given in the **ADDRESSES** section of this rule.

B. Executive Order 12866—Regulatory Planning and Review

Under Executive Order 12866 (58 FR 51735, October 4, 1993), the EPA must determine whether the regulatory action is ''significant'' and therefore subject to review by the Office of Management and Budget (OMB) on the basis of the requirements of the Executive Order, in addition to its normal review requirements. The Executive Order defines ''significant regulatory action'' as one that is likely to result in a rule that may:

(1) Have an annual effect on the economy of $100 million or more or adversely affect in a material way the economy, a sector of the economy, productivity, competition, jobs, the environment, public health or safety, or State, Local, or Tribal governments or communities;

(2) Create a serious inconsistency or otherwise interfere with an action taken or planned by another agency;

(3) Materially alter the budgetary impact of entitlements, grants, user fees, or loan programs, or the rights and obligations of recipients thereof; or

(4) Raise novel legal or policy issues arising out of legal mandates, the President's priorities, or the principles set forth in the Executive Order.

These proposed rule changes will not have an annual effect on the economy of $100 million or more, and therefore are not considered economically significant. In addition, we have determined that this rule is not a ''significant regulatory action'' because it does not contain novel policy issues.

C. Executive Order 13132—Federalism

Executive Order 13132, entitled ''Federalism'' (64 FR 43255, August 10, 1999), requires EPA to develop an accountable process to ensure ''meaningful and timely input by State and Local officials in the development of regulatory policies that have federalism implications.'' ''Policies that have federalism implications'' is defined in the Executive Order to include regulations that have ''substantial direct effects on the States, on the relationship between the national government and the States, or on the distribution of power and responsibilities among the various levels of government.''

Under section 6 of Executive Order 13132, EPA may not issue a regulation that has federalism implications, that imposes substantial direct compliance costs, and that is not required by statute, unless the Federal government provides the funds necessary to pay the direct compliance costs incurred by State and

Local governments or EPA consults with State and Local officials early in the process of developing the proposed regulation. The EPA also may not issue a regulation that has federalism implications and that preempts State law, unless the Agency consults with State and Local officials early in the process of developing the proposed regulation.

The proposed changes in today's rulemaking do not have federalism implications. They will not have substantial direct effects on the States, on the relationship between the national government and the States, or on the distribution of power and responsibilities among the various levels of government, as specified in Executive Order 13132, because this proposed rule only clarifies which portions of the existing NESHAP contain authorities that can be delegated to State, Local, and Tribal (S/L/T) governments and does not create any new requirements for S/L/Ts. In other words, this rulemaking only makes insignificant clarifications to existing NESHAP and is not expected to have any additional impact on the relationship between S/L/Ts and the Federal government. Thus, the requirements of section 6 of the Executive Order do not apply to today's rulemaking. Nevertheless, EPA will consider comments from S/L/T agencies to enable them to provide meaningful and timely input in the development of the final changes.

D. Executive Order 13175—Consultation with Tribal Governments

On November 6, 2000, the President issued Executive Order 13175 (65 CFR 67249) entitled, ''Consultation and Coordination with Indian Tribal Governments.'' Executive Order 13175 took effect on January 6, 2001, and revokes Executive Order 13084 (Tribal Consultation) as of that date. However, the rules that we propose to amend were developed during the period when Executive Order 13084 was in effect; thus, EPA addressed tribal considerations under Executive Order 13084. The EPA will analyze and fully comply with the requirements of Executive Order 13175 before promulgating the final rule.

Under Executive Order 13084, EPA may not issue a regulation that is not required by statute, that significantly or uniquely affects the communities of Indian tribal governments, and that imposes substantial direct compliance costs on those communities, unless the Federal government provides the funds necessary to pay the direct compliance costs incurred by the tribal governments, or EPA consults with those governments. If EPA complies by consulting, Executive Order 13084 requires EPA to provide to OMB, in a separately identified section of the preamble to the rule, a description of the extent of EPA's prior consultation with representatives of affected tribal governments, a summary of the nature of their concerns, and a statement supporting the need to issue the regulation. In addition, Executive Order 13084 requires EPA to develop an effective process permitting elected officials and other representatives of Indian tribal governments ''to provide meaningful and timely input in the development of regulatory policies on matters that significantly or uniquely affect their communities.''

The proposed changes in today's rulemaking do not significantly or uniquely affect the communities of Indian tribal governments. Because they implement a voluntary program, they impose no direct compliance costs on these communities. Accordingly, the requirements of section 3(b) of Executive Order 13084 do not apply.

E. Paperwork Reduction Act

This action does not impose an information collection burden under the provisions of the Paperwork Reduction Act, 44 U.S.C. 3501 *et seq*. The proposed changes are being made to rules that already have approved information collection requirements and valid OMB control numbers as required by the Paperwork Reduction Act. The proposed changes in today's rulemaking are clarifications to the relationship between EPA and the S/L/T agencies that have chosen to implement and enforce the rules. Therefore, there is no change in the burden that the rules impose on sources or S/L/Ts.

Burden means the total time, effort, or financial resources expended by persons to generate, maintain, retain, or disclose or provide information to or for a Federal agency. This includes the time needed to review instructions; develop, acquire, install, and utilize technology and systems for the purpose of collecting, validating, and verifying information; process and maintain information and disclose and provide information; adjust the existing ways to comply with any previously applicable instructions and requirements; train personnel to respond to a collection of information; search existing data sources; complete and review the collection of information; and transmit or otherwise disclose the information.

An agency may not conduct or sponsor, and a person is not required to respond to a collection of information unless it displays a currently valid OMB control number. The OMB control numbers for EPA's regulations are listed in 40 CFR part 9 and 48 CFR chapter 15.

F. Regulatory Flexibility Act (RFA), as Amended by the Small Business Regulatory Enforcement Fairness Act of 1996 (SBREFA), 5 U.S.C. 601 et seq.

The RFA generally requires an agency to prepare a regulatory flexibility analysis of any rule subject to notice and comment rulemaking requirements unless the agency certifies that the rule will not have a significant economic impact on a substantial number of small entities. Small entities include small businesses, small organizations, and small governmental jurisdictions.

We believe that there will be little or no impact on small entities as a result of these rule revisions. State, Local, and Tribal governments are the only entities affected by this action and we expect that most or all of the governments which would have the authority to accept delegation under section 112(l) of the Act are those whose populations exceed 50,000 persons and are thus, not considered ''small.'' In the case of Tribal jurisdictions where population will not exceed 50,000 persons, we still believe that there will be little or no impact as a result of these revisions because none currently have air toxics programs. Furthermore, these rule revisions add flexibility and clarity to the existing NESHAP that these governments may choose to implement and enforce and, therefore, eases rather than imposes burdens. Accordingly, because few or none of the affected entities are expected to be small entities and because the regulatory impacts will be insignificant, I hereby certify that this rule will not have a significant economic impact on a substantial number of small entities.

G. Unfunded Mandates Reform Act of 1995

Title II of the Unfunded Mandates Reform Act of 1995 (UMRA), Public Law 104–4, establishes requirements for Federal agencies to assess the effects of their regulatory actions on S/L/T governments and the private sector. Under section 202 of the UMRA, we generally must prepare a written statement, including a cost-benefit analysis, for proposed and final rules with ''Federal mandates'' that may result in expenditures to S/L/T governments, in the aggregate, or to the private sector of $100 million or more in any 1 year. Before promulgating an EPA rule for which a written statement is needed, section 205 of the UMRA generally requires us to identify and

consider a reasonable number of regulatory alternatives and adopt the least costly, most cost-effective, or least burdensome alternative that achieves the objectives of the rule. The provisions of section 205 do not apply when they are inconsistent with applicable law. Moreover, section 205 allows us to adopt an alternative other than the least costly, most cost-effective, or least burdensome alternative if EPA publishes with the final rule an explanation why that alternative was not adopted. Before we establish any regulatory requirements that may significantly or uniquely affect small governments, including Tribal governments, we must have developed under section 203 of the UMRA a small government agency plan. The plan must provide for notifying potentially affected small governments, enabling officials of affected small governments to have meaningful and timely input in the development of EPA regulatory proposals with significant Federal intergovernmental mandates, and informing, educating, and advising small governments on compliance with the regulatory requirements.

The proposed rule changes contain no Federal mandates (under the regulatory provisions of Title II of the UMRA) for S/L/T governments or the private sector. Because the rule is estimated to result in the expenditure by S/L/T governments of significantly less than $100 million in any 1 year, we have not prepared a budgetary impact statement or specifically addressed the selection of the least costly, most effective, or least burdensome alternative. Because small governments will not be significantly or uniquely affected by this rule, we are not required to develop a plan with regard to small governments. Moreover, this action clarifies the relationship between EPA and the S/L/T agencies who have voluntarily requested delegation of the part 63 NESHAP, so it does not impose any mandates on those entities. Therefore, the requirements of the Unfunded Mandates Reform Act do not apply to this action.

H. Executive Order 13045—Protection of Children From Environmental Health Risks and Safety Risks

Executive Order 13045 applies to any rule that EPA determines (1) is economically significant as defined under Executive Order 12866, and (2) the environmental health or safety risk addressed by the rule has a disproportionate effect on children. If the regulatory action meets both criteria, the Agency must evaluate the environmental health or safety effects of the planned rule on children and explain why the planned regulation is preferable to other potentially effective and reasonable alternatives considered by the Agency.

These proposed changes are not subject to Executive Order 13045, entitled Protection of Children from Environmental Health Risks and Safety Risks (62 FR 19885, April 23, 1997), because they are not an economically significant regulatory action as defined by Executive Order 12866, and because the Agency does not have reason to believe the environmental health or safety risks addressed by this action present a disproportionate risk to children.

I. National Technology Transfer and Advancement Act of 1995

Section 12(d) of the National Technology Transfer and Advancement Act (NTTAA) of 1995 (Public Law 104–113) (15 U.S.C. 272 note) directs EPA to use voluntary consensus standards in their regulatory and procurement activities unless to do so would be inconsistent with applicable law or otherwise impractical. Voluntary consensus standards are technical standards (e.g., materials specifications, test methods, sampling procedures, business practices) developed or adopted by one or more voluntary consensus bodies. The NTTAA directs EPA to provide Congress, through annual reports to the Office of Management and Budget (OMB), with explanations when an agency does not use available and applicable voluntary consensus standards.

The proposed changes do not affect selection of technical standards that are contained in the existing subparts. Therefore, we are not considering the use of any voluntary consensus standards.

J. Executive Order 13211—Energy Effects

This rule is not subject to Executive Order 13211, ''Actions Concerning Regulations That Significantly Affect Energy Supply, Distribution, or Use'' (66 FR 28355 (May 22, 2001)) because it is not a significant regulatory action under Executive Order 12866.

List of Subjects in 40 CFR Part 63

Environmental protection, Administrative practices and procedures, Air pollution control, Hazardous substances, Intergovernmental relations, Reporting and recordkeeping requirements.

Dated: December 19, 2001.

Christine Todd Whitman,

Administrator.

For the reasons set out in the preamble, title 40, chapter 1 of the Code of Federal Regulations is proposed to be amended as follows:

PART 63—[AMENDED]

1. The authority citation for part 63 continues to read as follows:

Authority: 42 U.S.C. 7401, *et seq.*

Subpart F—[Amended]

2. Section 63.106 is revised to read as follows:

§ 63.106 Implementation and enforcement.

(a) This subpart can be implemented and enforced by the U.S. EPA, or a delegated authority such as the applicable State, local, or tribal agency. If the U.S. EPA Administrator has delegated authority to a State, local, or tribal agency, then that agency, in addition to the U.S. EPA, has the authority to implement and enforce this subpart. Contact the applicable U.S. EPA Regional Office to find out if implementation and enforcement of this subpart is delegated to a State, local, or tribal agency.

(b) In delegating implementation and enforcement authority of this subpart to a State, local, or tribal agency under subpart E of this part, the authorities contained in paragraph (c) of this section are retained by the Administrator of U.S. EPA and cannot be transferred to the State, local, or tribal agency.

(c) The authorities that cannot be delegated to State, local, or tribal agencies are as specified in paragraphs (c)(1) through (4) of this section.

(1) Approval of alternatives to requirements in §§ 63.100, 63.102, and 63.104. Where these standards reference another subpart, the cited provisions will be delegated according to the delegation provisions of the referenced subpart.

(2) Approval of major alternatives to test methods under § 63.7(e)(2)(ii) and (f), as defined in § 63.90, and as required in this subpart.

(3) Approval of major alternatives to monitoring under § 63.8(f), as defined in § 63.90, and as required in this subpart.

(4) Approval of major alternatives to recordkeeping and reporting under § 63.10(f), as defined in § 63.90, and as required in this subpart.

Subpart G—[Amended]

3. Section 63.153 is added to Subpart G to read as follows:

§ 63.153 Implementation and enforcement.

(a) This subpart can be implemented and enforced by the U.S. EPA, or a delegated authority such as the applicable State, local, or tribal agency. If the U.S. EPA Administrator has delegated authority to a State, local, or tribal agency, then that agency, in addition to the U.S. EPA, has the authority to implement and enforce this subpart. Contact the applicable U.S. EPA Regional Office to find out if implementation and enforcement of this subpart is delegated to a State, local, or tribal agency.

(b) In delegating implementation and enforcement authority of this subpart to a State, local, or tribal agency under subpart E of this part, the authorities contained in paragraph (c) of this section are retained by the Administrator of U.S. EPA and cannot be transferred to the State, local, or tribal agency.

(c) The authorities that cannot be delegated to State, local, or tribal agencies are as specified in paragraphs (c)(1) through (4) of this section.

(1) Approval of alternatives to the requirements in §§ 63.110, 63.112 and 63.113, 63.119, 63.126, 63.132 through 63.140, 63.148–63.149, and 63.150(i)(1) through (4). Follow the requirements in § 63.121 to request permission to use an alternative means of emission limitation for storage vessels. Where these standards reference another subpart, the cited provisions will be delegated according to the delegation provisions of the referenced subpart. Where these standards reference another subpart and modify the requirements, the requirements shall be modified as described in this subpart. Delegation of the modified requirements will also occur according to the delegation provisions of the referenced subpart.

(2) Approval of major alternatives to test methods under § 63.7(e)(2)(ii) and (f), as defined in § 63.90, and as required in this subpart.

(3) Approval of major alternatives to monitoring under § 63.8(f), as defined in § 63.90, and as required in this subpart.

(4) Approval of major alternatives to recordkeeping and reporting under § 63.10(f), as defined in § 63.90, and as required in this subpart.

Subpart H—[Amended]

4. Section 63.183 is added to Subpart H to read as follows:

§ 63.183 Implementation and enforcement.

(a) This subpart can be implemented and enforced by the U.S. EPA, or a delegated authority such as the applicable State, local, or tribal agency. If the U.S. EPA Administrator has delegated authority to a State, local, or tribal agency, then that agency, in addition to the U.S. EPA, has the authority to implement and enforce this subpart. Contact the applicable U.S. EPA Regional Office to find out if implementation and enforcement of this subpart is delegated to a State, local, or tribal agency.

(b) In delegating implementation and enforcement authority of this subpart to a State, local, or tribal agency under subpart E of this part, the authorities contained in paragraph (c) of this section are retained by the Administrator of U.S. EPA and cannot be transferred to the State, local, or tribal agency.

(c) The authorities that cannot be delegated to State, local, or tribal agencies are as specified in paragraphs (c)(1) through (4) of this section.

(1) Approval of alternatives to the requirements in §§ 63.160, 63.162–63.176, 63.178–63.179. Follow the applicable procedures of § 63.177 to request an alternative means of emission limitation for batch processes and enclosed-vented process units. Where these standards reference another subpart, the cited provisions will be delegated according to the delegation provisions of the referenced subpart. Where these standards reference another subpart and modify the requirements, the requirements shall be modified as described in this subpart. Delegation of the modified requirements will also occur according to the delegation provisions of the referenced subpart.

(2) Approval of major alternatives to test methods under § 63.7(e)(2)(ii) and (f), as defined in § 63.90, and as required in this subpart.

(3) Approval of major alternatives to monitoring under § 63.8(f), as defined in § 63.90, and as required in this subpart.

(4) Approval of major alternatives to recordkeeping and reporting under § 63.10(f), as defined in § 63.90, and as required in this subpart.

Subpart I—[Amended]

5. Section 63.193 is revised to read as follows:

§ 63.193 Implementation and enforcement.

(a) This subpart can be implemented and enforced by the U.S. EPA, or a delegated authority such as the applicable State, local, or tribal agency. If the U.S. EPA Administrator has delegated authority to a State, local, or tribal agency, then that agency, in addition to the U.S. EPA, has the authority to implement and enforce this subpart. Contact the applicable U.S. EPA Regional Office to find out if implementation and enforcement of this subpart is delegated to a State, local, or tribal agency.

(b) In delegating implementation and enforcement authority of this subpart to a State, local, or tribal agency under subpart e of this part, the authorities contained in paragraph (c) of this section are retained by the Administrator of U.S. EPA and cannot be transferred to the State, local, or tribal agency.

(c) The authorities that cannot be delegated to State, local, or tribal agencies are as specified in paragraphs (c)(1) through (4) of this section.

(1) Approval of alternatives to the requirements in §§ 63.190 and 63.192(a) and (b), (e), and (h) through (j). Where these standards reference another subpart, the cited provisions will be delegated according to the delegation provisions of the referenced subpart.

(2) Approval of major alternatives to test methods under § 63.7(e)(2)(ii) and (f), as defined in § 63.90, and as required in this subpart.

(3) Approval of major alternatives to monitoring under § 63.8(f), as defined in § 63.90, and as required in this subpart.

(4) Approval of major alternatives to recordkeeping and reporting under § 63.10(f), as defined in § 63.90, and as required in this subpart.

Subpart L—[Amended]

6. Section 63.309 is amended by revising (a)(5)(i) to read as follows:

§ 63.309 Performance tests and procedures.

(a) * * *

(5)(i) The EPA shall be the enforcement agency during any period of time that a delegation of enforcement authority is not in effect or a withdrawal of enforcement authority under § 63.313 is in effect, and the Administrator is responsible for performing the inspections required by this section, pursuant to § 63.313(c).

* * * * *

7. Section 63.313 is revised to read as follows:

§ 63.313 Implementation and enforcement.

(a) This subpart can be implemented and enforced by the U.S. EPA, or a delegated authority such as the applicable State, local, or tribal agency. If the U.S. EPA Administrator has delegated authority to a State, local, or tribal agency, then that agency, in addition to the U.S. EPA, has the authority to implement and enforce this subpart. Contact the applicable U.S. EPA Regional Office to find out if implementation and enforcement of this

subpart is delegated to a State, local, or tribal agency.

(b) In delegating implementation and enforcement authority of this subpart to a State, local, or tribal agency under subpart e of this part, the authorities contained in paragraph (d) of this section are retained by the Administrator and cannot be transferred to the State, local, or tribal agency.

(c) *Withdrawal of authority.* (1) Whenever the Administrator learns that a delegated agency has not fully carried out the inspections and performance tests required under § 63.309 for each applicable emission point of each battery each day, the Administrator shall immediately notify the agency. Unless the delegated agency demonstrates to the Administrator's satisfaction within 15 days of notification that the agency is consistently carrying out the inspections and performance tests required under § 63.309 in the manner specified in the preceding sentence, the Administrator shall notify the coke oven battery owner or operator that inspections and performance tests shall be carried out according to § 63.309(a)(5). When the Administrator determines that the delegated agency is prepared to consistently perform all the required inspections and performance tests each day, the Administrator shall give the coke oven battery owner or operator at least 15 days notice that implementation will revert to the previously delegated agency.

(2) In addition to the provisions in paragraph (c)(1) of this section, the Administrator may also withdraw delegation of authority pursuant to the provisions of § 63.96 of subpart E of this part.

(d) The authorities that cannot be delegated to State, local, or tribal agencies are as specified in paragraphs (d)(1) through (5) of this section.

(1) Approval of alternatives to the requirements in §§ 63.300 and 63.302 through 63.308.

(2) Approval of major alternatives to test methods under § 63.7(e)(2)(ii) and (f), as defined in § 63.90, and as required in this subpart.

(3) Approval of any changes to section 2 of Method 303 in appendix A of this part.

(4) Approval of major alternatives to monitoring under § 63.8(f), as defined in § 63.90, and as required in this subpart.

(5) Approval of major alternatives to recordkeeping and reporting under § 63.10(f), as defined in § 63.90, and as required in this subpart.

Subpart M—[Amended]

8. Section 63.326 is added to Subpart M to read as follows:

§ 63.326 Implementation and enforcement.

(a) This subpart can be implemented and enforced by the U.S. EPA, or a delegated authority such as the applicable State, local, or tribal agency. If the U.S. EPA Administrator has delegated authority to a State, local, or tribal agency, then that agency, in addition to the U.S. EPA, has the authority to implement and enforce this subpart. Contact the applicable U.S. EPA Regional Office to find out if implementation and enforcement of this subpart is delegated to a State, local, or tribal agency.

(b) In delegating implementation and enforcement authority of this subpart to a State, local, or tribal agency under subpart e of this part, the authorities contained in paragraph (c) of this section are retained by the Administrator of U.S. EPA and cannot be transferred to the State, local, or tribal agency.

(c) The authorities that cannot be delegated to State, local, or tribal agencies are as specified in paragraphs (c)(1) through (4) of this section.

(1) Approval of alternatives to the requirements in §§ 63.320 and 63.322(a) through (j). Follow the requirements in § 63.325 to demonstrate that alternative equipment or procedures are equivalent to the requirements of § 63.322.

(2) Approval of major alternatives to test methods under § 63.7(e)(2)(ii) and (f), as defined in § 63.90, and as required in this subpart.

(3) Approval of major alternatives to monitoring under § 63.8(f), as defined in § 63.90, and as required in this subpart.

(4) Approval of major alternatives to recordkeeping and reporting under § 63.10(f), as defined in § 63.90, and as required in this subpart.

Subpart N—[Amended]

9. Section 63.342 is amended:

a. By revising paragraph (f) introductory text.

b. Revising paragraph (f)(3)(i) introductory text.

c. Revising paragraphs (f)(3)(i)(B) and (C).

d. Revising the headings for Table 1 and its columns.

The revisions read as follows:

§ 63.342 Standards.

* * * * *

(f) *Operation and maintenance practices.* All owners or operators subject to the standards in paragraphs (c) and (d) of this section are subject to these operation and maintenance practices.

* * * * *

(3) *Operation and maintenance plan.* (i) The owner or operator of an affected source subject to paragraph (f) of this section shall prepare an operation and maintenance plan to be implemented no later than the compliance date, except for hard chromium electroplaters and the chromium anodizing operations in California which have until January 25, 1998. The plan shall be incorporated by reference into the source's title V permit, if and when a title V permit is required. The plan shall include the following elements:

* * * * *

(B) For sources using an add-on control device or monitoring equipment to comply with this subpart, the plan shall incorporate the operation and maintenance practices for that device or monitoring equipment, as identified in Table 1 of this section, if the specific equipment used is identified in Table 1 of this section;

(C) If the specific equipment used is not identified in Table 1 of this section, the plan shall incorporate proposed operation and maintenance practices. These proposed operation and maintenance practices shall be submitted for approval as part of the submittal required under § 63.343(d);

* * * * *

TABLE 1 TO § 63.342.—SUMMARY OF OPERATION AND MAINTENANCE PRACTICES

Control technique	Operation and maintenance practices	Frequency
*	*	*	*	*

10. Section 63.343 is amended by revising paragraph (d) to read as follows:

§ 63.343 Compliance provisions.

* * * * *

(d) An owner or operator who uses an air pollution control device not listed in this section shall submit a description of the device, test results collected in accordance with § 63.344(c) verifying the performance of the device for reducing chromium emissions to the atmosphere to the level required by this subpart, a copy of the operation and maintenance plan referenced in § 63.342(f) including operation and maintenance practices, and appropriate operating parameters that will be monitored to establish continuous

compliance with the standards. The monitoring plan submitted identifying the continuous compliance monitoring is subject to the Administrator's approval.

11. Section 63.348 is added to Subpart N to read as follows:

§ 63.348 Implementation and enforcement.

(a) This subpart can be implemented and enforced by the U.S. EPA, or a delegated authority such as the applicable State, local, or tribal agency. If the U.S. EPA Administrator has delegated authority to a State, local, or tribal agency, then that agency, in addition to the U.S. EPA, has the authority to implement and enforce this subpart. Contact the applicable U.S. EPA Regional Office to find out if implementation and enforcement of this subpart is delegated to a State, local, or tribal agency.

(b) In delegating implementation and enforcement authority of this subpart to a State, local, or tribal agency under subpart E of this part, the authorities contained in paragraph (c) of this section are retained by the Administrator of U.S. EPA and cannot be transferred to the State, local, or tribal agency.

(c) The authorities that cannot be delegated to State, local, or tribal agencies are as specified in paragraphs (c)(1) through (4) of this section.

(1) Approval of alternatives to the requirements in §§ 63.340 and 63.342(a) through (e) and (g).

(2) Approval of major alternatives to test methods under § 63.7(e)(2)(ii) and (f), as defined in § 63.90, and as required in this subpart.

(3) Approval of major alternatives to monitoring under § 63.8(f), as defined in § 63.90, and as required in this subpart.

(4) Approval of major alternatives to recordkeeping and reporting under § 63.10(f), as defined in § 63.90, and as required in this subpart.

Subpart O—[Amended]

12. Section 63.368 is added to Subpart O to read as follows:

§ 63.368 Implementation and enforcement.

(a) This subpart can be implemented and enforced by the U.S. EPA, or a delegated authority such as the applicable State, local, or tribal agency. If the U.S. EPA Administrator has delegated authority to a State, local, or tribal agency, then that agency, in addition to the U.S. EPA, has the authority to implement and enforce this subpart. Contact the applicable U.S. EPA Regional Office to find out if implementation and enforcement of this subpart is delegated to a State, local, or tribal agency.

(b) In delegating implementation and enforcement authority of this subpart to a State, local, or tribal agency under subpart E of this part, the authorities contained in paragraph (c) of this section are retained by the Administrator of U.S. EPA and cannot be transferred to the State, local, or tribal agency.

(c) The authorities that cannot be delegated to State, local, or tribal agencies are as specified in paragraphs (c)(1) through (4) of this section.

(1) Approval of alternatives to the requirements in §§ 63.360 and 63.362.

(2) Approval of major alternatives to test methods under § 63.7(e)(2)(ii) and (f), as defined in § 63.90, and as required in this subpart.

(3) Approval of major alternatives to monitoring under § 63.8(f), as defined in § 63.90, and as required in this subpart.

(4) Approval of major alternatives to recordkeeping and reporting under § 63.10(f), as defined in § 63.90, and as required in this subpart.

Subpart Q—[Amended]

13. Section 63.407 is added to Subpart Q to read as follows:

§ 63.407 Implementation and enforcement.

(a) This subpart can be implemented and enforced by the U.S. EPA, or a delegated authority such as the applicable State, local, or tribal agency. If the U.S. EPA Administrator has delegated authority to a State, local, or tribal agency, then that agency, in addition to the U.S. EPA, has the authority to implement and enforce this subpart. Contact the applicable U.S. EPA Regional Office to find out if implementation and enforcement of this subpart is delegated to a State, local, or tribal agency.

(b) In delegating implementation and enforcement authority of this subpart to a State, local, or tribal agency under subpart E of this part, the authorities contained in paragraph (c) of this section are retained by the Administrator of U.S. EPA and cannot be transferred to the State, local, or tribal agency.

(c) The authorities that cannot be delegated to State, local, or tribal agencies are as specified in paragraphs (c)(1) through (4) of this section.

(1) Approval of alternatives to the requirements in §§ 63.400 and 63.402–63.403.

(2) Approval of major alternatives to test methods under § 63.7(e)(2)(ii) and (f), as defined in § 63.90, and as required in this subpart.

(3) Approval of major alternatives to monitoring under § 63.8(f), as defined in § 63.90, and as required in this subpart.

(4) Approval of major alternatives to recordkeeping and reporting under § 63.10(f), as defined in § 63.90, and as required in this subpart.

Subpart R—[Amended]

14. Section 63.429 is revised to read as follows:

§ 63.429 Implementation and enforcement.

(a) This subpart can be implemented and enforced by the U.S. EPA, or a delegated authority such as the applicable State, local, or tribal agency. If the U.S. EPA Administrator has delegated authority to a State, local, or tribal agency, then that agency, in addition to the U.S. EPA, has the authority to implement and enforce this subpart. Contact the applicable U.S. EPA Regional Office to find out if implementation and enforcement of this subpart is delegated to a State, local, or tribal agency.

(b) In delegating implementation and enforcement authority of this subpart to a State, local, or Tribal agency under subpart E of this part, the authorities contained in paragraph (c) of this section are retained by the Administrator of U.S. EPA and cannot be transferred to the State, local, or Tribal agency.

(c) The authorities that cannot be delegated to State, local, or tribal agencies are as specified in paragraphs (c)(1) through (4) of this section.

(1) Approval of alternatives to the requirements in §§ 63.420 and 63.422 through 63.424. Any owner or operator requesting to use an alternative means of emission limitation for storage vessels covered by § 63.423 must follow the procedures in § 63.426.

(2) Approval of major alternatives to test methods under § 63.7(e)(2)(ii) and (f), as defined in § 63.90, and as required in this subpart.

(3) Approval of major alternatives to monitoring under § 63.8(f), as defined in § 63.90, and as required in this subpart, and any alternatives to § 63.427(a)(1) through (4) per § 63.427(a)(5).

(4) Approval of major alternatives to recordkeeping and reporting under § 63.10(f), as defined in § 63.90, and as required in this subpart.

Subpart S—[Amended]

15. Section 63.450 is amended by revising paragraph (d)(1) to read as follows:

§ 63.450 Standards for enclosures and closed-vent systems.

* * * * *

(d) * * *

(1) On each bypass line, the owner or operator shall install, calibrate, maintain, and operate according to the manufacturer's specifications a flow indicator that is capable of taking periodic readings as frequently as specified in § 63.454(e). The flow indicator shall be installed in the bypass line in such a way as to indicate flow in the bypass line; or

* * * * *

16. Section 63.454 is amended by revising paragraph (e) to read as follows:

§ 63.454 Recordkeeping requirements.

* * * * *

(e) The owner or operator shall set the flow indicator on each bypass line specified in § 63.450(d)(1) to provide a record of the presence of gas stream flow in the bypass line at least once every 15 minutes.

* * * * *

17. Section 63.458 is revised to read as follows:

§ 63.458 Implementation and enforcement.

(a) This subpart can be implemented and enforced by the U.S. EPA, or a delegated authority such as the applicable State, local, or tribal agency. If the U.S. EPA Administrator has delegated authority to a State, local, or tribal agency, then that agency, in addition to the U.S. EPA, has the authority to implement and enforce this subpart. Contact the applicable U.S. EPA Regional Office to find out if this subpart is delegated to a State, local, or tribal agency.

(b) In delegating implementation and enforcement authority of this subpart to a State, local, or tribal agency under subpart E of this part, the authorities contained in paragraph (c) of this section are retained by the Administrator of U.S. EPA and cannot be transferred to the State, local, or tribal agency.

(c) The authorities that cannot be delegated to State, local, or tribal agencies are as specified in paragraphs (c)(1) through (4) of this section.

(1) Approval of alternatives to the requirements in §§ 63.440, 63.443 through 63.447 and 63.450. Where these standards reference another subpart, the cited provisions will be delegated according to the delegation provisions of the referenced subpart.

(2) Approval of alternatives to using §§ 63.457(b)(5)(iii), 63.457(c)(3)(ii) and (iii), and 63.257(c)(5)(ii), and any major alternatives to test methods under § 63.7(e)(2)(ii) and (f), as defined in § 63.90, and as required in this subpart.

(3) Approval of alternatives using § 64.453(m) and any major alternatives to monitoring under § 63.8(f), as defined in § 63.90, and as required in this subpart.

(4) Approval of major alternatives to recordkeeping and reporting under § 63.10(f), as defined in § 63.90, and as required in this subpart.

Subpart T—[Amended]

18. Section 63.460 is amended by removing and reserving paragraph (f).

19. Section 63.462 is amended by adding paragraph (e) to read as follows:

§ 63.462 Batch cold cleaning machine standards.

* * * * *

(e) Each owner or operator subject to the requirements of paragraph (c)(1) through (8) of this section may request to use measures other than those described in these paragraphs. The owner or operator must demonstrate to the Administrator (or delegated State, local, or Tribal authority) that the alternative measures will result in equivalent or better emissions control compared to the measures described in paragraphs (c)(1) through (8) of this section. For example, storing solvent and solvent-laden materials in an enclosed area that is ventilated to a solvent recovery or destruction device may be considered an acceptable alternative.

20. Section 63.463 is amended by revising paragraph (e)(2)(ix)(B) to read as follows:

§ 63.463 Batch vapor and in-line cleaning machine standards.

* * * * *

(e) * * *

(2) * * *

(ix) * * *

(B) Conduct the weekly monitoring required by § 63.466(a)(3). Record the results required by § 63.467(a)(6).

* * * * *

21. Section 63.467 is amended by revising paragraph (a)(6) to read as follows:

§ 63.467 Recordkeeping requirements.

(a) * * *

(6) If a squeegee system is used to comply with these standards, records of the test required by § 63.466(f) to determine the maximum product throughput for the squeegees and records of both the weekly monitoring required by § 63.466(a)(3) for visual inspection and the length of continuous web product cleaned during the previous week.

* * * * *

22. Section 63.470 is added to Subpart T to read as follows:

§ 63.470 Implementation and enforcement.

(a) This subpart can be implemented and enforced by the U.S. EPA, or a delegated authority such as the applicable State, local, or tribal agency. If the U.S. EPA Administrator has delegated authority to a State, local, or tribal agency, then that agency, in addition to the U.S. EPA, has the authority to implement and enforce this subpart. Contact the applicable U.S. EPA Regional Office to find out if implementation and enforcement of this subpart is delegated to a State, local, or tribal agency.

(b) In delegating implementation and enforcement authority of this subpart to a State, local, or tribal agency under subpart E of this part, the authorities contained in paragraph (c) of this section are retained by the Administrator of U.S. EPA and cannot be transferred to the State, local, or tribal agency.

(c) The authorities that cannot be delegated to State, local, or tribal agencies are as specified in paragraphs (c)(1) through (4) of this section.

(1) Approval of alternatives to the requirements in §§ 63.460, 63.462(a) through (d), and 63.463 and 63.464. Use the procedures in § 63.469 to request the use of alternative equipment or procedures, and use the procedures in § 63.463(d)(9) to request alternative maintenance practices.

(2) Approval of major alternatives to test methods under § 63.7(e)(2)(ii) and (f), as defined in § 63.90, and as required in this subpart.

(3) Approval of major alternatives to monitoring under § 63.8(f), as defined in § 63.90, and as required in this subpart.

(4) Approval of major alternatives to recordkeeping and reporting under § 63.10(f), as defined in § 63.90, and as required in this subpart.

Subpart U—[Amended]

23. Section 63.507 is added to Subpart U to read as follows:

§ 63.507 Implementation and enforcement.

(a) This subpart can be implemented and enforced by the U.S. EPA, or a delegated authority such as the applicable State, local, or tribal agency. If the U.S. EPA Administrator has delegated authority to a State, local, or tribal agency, then that agency, in addition to the U.S. EPA, has the authority to implement and enforce this subpart. Contact the applicable U.S. EPA Regional Office to find out if this subpart is delegated to a State, local, or tribal agency.

(b) In delegating implementation and enforcement authority of this subpart to

a State, local, or tribal agency under subpart E of this part, the authorities contained in paragraph (c) of this section are retained by the Administrator of U.S. EPA and cannot be transferred to the State, local, or tribal agency.

(c) The authorities that cannot be delegated to State, local, or tribal agencies are as specified in paragraphs (c)(1) through (4) of this section.

(1) Approval of alternatives to the requirements in §§ 63.480 and 63.481, 63.483(a) through (c), 63.484, 63.485(a) through (k), (m) through (s),(u), 63.486 and 63.487, 63.488(a), (b)(1) through (4), (b)(5)(iv) and (v), (b)(6) and (7), (c) through (i), 63.493 and 63.494, 63.500(a)(1) through (3), (b), 63.501, 63.502(a) through (f), (i), (k) through (m), and 63.503. Where these standards reference another subpart, the cited provisions will be delegated according to the delegation provisions of the referenced subpart. Where these standards reference another subpart and modify the requirements, the requirements shall be modified as described in this subpart. Delegation of the modified requirements will also occur according to the delegation provisions of the referenced subpart.

(2) Approval of major alternatives to test methods under § 63.7(e)(2)(ii) and (f), as defined in § 63.90, and as required in this subpart.

(3) Approval of major alternatives to monitoring under § 63.8(f), as defined in § 63.90, and as required in this subpart.

(4) Approval of major alternatives to recordkeeping and reporting under § 63.10(f), as defined in § 63.90, and as required in this subpart.

Subpart W—[Amended]

24. Section 63.529 is added to Subpart W to read as follows:

§ 63.529 Implementation and enforcement.

(a) This subpart can be implemented and enforced by the U.S. EPA, or a delegated authority such as the applicable State, local, or tribal agency. If the U.S. EPA Administrator has delegated authority to a State, local, or tribal agency, then that agency, in addition to the U.S. EPA, has the authority to implement and enforce this subpart. Contact the applicable U.S. EPA Regional Office to find out if implementation and enforcement of this subpart is delegated to a State, local, or tribal agency.

(b) In delegating implementation and enforcement authority of this subpart to a State, local, or tribal agency under subpart E of this part, the authorities contained in paragraph (c) of this section are retained by the Administrator of U.S. EPA and cannot be transferred to the State, local, or tribal agency.

(c) The authorities that cannot be delegated to State, local, or tribal agencies are as specified in paragraphs (c)(1) through (4) of this section.

(1) Approval of alternatives to the requirements in §§ 63.520, 63.523, and 63.524. Where these standards reference another rule, the cited provisions in that rule will be delegated according to the delegation provisions of that rule.

(2) Approval of major alternatives to test methods for under § 63.7(e)(2)(ii) and (f), as defined in § 63.90, and as required in this subpart.

(3) Approval of major alternatives to monitoring under § 63.8(f), as defined in § 63.90, and as required in this subpart.

(4) Approval of major alternatives to recordkeeping and reporting under § 63.10(f), as defined in § 63.90, and as required in this subpart.

Subpart X—[Amended]

25. Section 63.545 is amended by revising paragraph (c) introductory text and adding paragraph (f) to read as follows:

§ 63.545 Standards for fugitive dust sources.

* * * * *

(c) The controls specified in the standard operating procedures manual shall at a minimum include the requirements of paragraphs (c)(1) through (c)(5) of this section, unless the owner or operator satisfies the requirements in paragraph (f) of this section.

* * * * *

(f) Demonstrate to the Administrator (or delegated State, local, or Tribal authority) that an alternative measure(s) is equivalent or better than a practice(s) described in paragraphs (c)(1) through (c)(5) of this section.

26. Section 63.551 is added to Subpart X to read as follows:

§ 63.551 Implementation and enforcement.

(a) This subpart can be implemented and enforced by the U.S. EPA, or a delegated authority such as the applicable State, local, or tribal agency. If the U.S. EPA Administrator has delegated authority to a State, local, or tribal agency, then that agency, in addition to the U.S. EPA, has the authority to implement and enforce this subpart. Contact the applicable U.S. EPA Regional Office to find out if this subpart is delegated to a State, local, or tribal agency.

(b) In delegating implementation and enforcement authority of this subpart to a State, local, or tribal agency under subpart E of this part, the authorities contained in paragraph (c) of this section are retained by the Administrator of U.S. EPA and cannot be transferred to the State, local, or tribal agency.

(c) The authorities that cannot be delegated to State, local, or tribal agencies are as specified in paragraphs (c)(1) through (4) of this section.

(1) Approval of alternatives to the requirements in §§ 63.541 and 63.543 through 63.545(a) through (e).

(2) Approval of major alternatives to test methods for under § 63.7(e)(2)(ii) and (f), as defined in § 63.90, and as required in this subpart.

(3) Approval of major alternatives to monitoring under § 63.8(f), as defined in § 63.90, and as required in this subpart.

(4) Approval of major alternatives to recordkeeping and reporting under § 63.10(f), as defined in § 63.90, and as required in this subpart.

Subpart Y—[Amended]

27. Section 63.562 is amended by removing paragraph (d)(3).

28. Section 63.567 is amended by adding paragraph (l) to read as follows:

§ 63.567 Recordkeeping and reporting requirements.

* * * * *

(l) The owner or operator of the VMT source required by § 63.562(d)(2)(iv) to develop a program, shall submit annual reports on or before January 31 of each year to the Administrator certifying the annual average daily loading rate for the previous calendar year. Beginning on January 31, 1996, for the reported year 1995, the annual report shall specify the annual average daily loading rate over all loading berths. Beginning on January 31, 1999, for the reported year 1998, the annual report shall specify the annual average daily loading rate over all loading berths, over each loading berth equipped with a vapor collection system and control device, and over each loading berth not equipped with a vapor collection system and control device. The annual average daily loading rate under this section is calculated as the total amount of crude oil loaded during the calendar year divided by 365 days or 366 days, as appropriate.

29. Section 63.568 is added to Subpart Y to read as follows:

§ 63.568 Implementation and enforcement.

(a) This subpart can be implemented and enforced by the U.S. EPA, or a delegated authority such as the applicable State, local, or tribal agency. If the U.S. EPA Administrator has delegated authority to a State, local, or

tribal agency, then that agency, in addition to the U.S. EPA, has the authority to implement and enforce this subpart. Contact the applicable U.S. EPA Regional Office to find out if implementation and enforcement of this subpart is delegated to a State, local, or tribal agency.

(b) In delegating implementation and enforcement authority of this subpart to a State, local, or tribal agency under subpart E of this part, the authorities contained in paragraph (c) of this section are retained by the Administrator of U.S. EPA and cannot be transferred to the State, local, or tribal agency.

(c) The authorities that cannot be delegated to State, local, or tribal agencies are as specified in paragraphs (c)(1) through (4) of this section.

(1) Approval of alternatives to the requirements in §§ 63.560 and 63.562(a) through (d).

(2) Approval of major alternatives to test methods for under § 63.7(e)(2)(ii) and (f), as defined in § 63.90, and as required in this subpart.

(3) Approval of major alternatives to monitoring under § 63.8(f), as defined in § 63.90, and as required in this subpart.

(4) Approval of major alternatives to recordkeeping and reporting under § 63.10(f), as defined in § 63.90, and as required in this subpart.

Subpart AA—[Amended]

30. Section 63.611 is added to Subpart AA to read as follows:

§ 63.611 Implementation and enforcement.

(a) This subpart can be implemented and enforced by the U.S. EPA, or a delegated authority such as the applicable State, local, or tribal agency. If the U.S. EPA Administrator has delegated authority to a State, local, or tribal agency, then that agency, in addition to the U.S. EPA, has the authority to implement and enforce this subpart. Contact the applicable U.S. EPA Regional Office to find out if implementation and enforcement of this subpart is delegated to a State, local, or tribal agency.

(b) In delegating implementation and enforcement authority of this subpart to a State, local, or tribal agency under subpart E of this part, the authorities contained in paragraph (c) of this section are retained by the Administrator of U.S. EPA and cannot be transferred to the State, local, or tribal agency.

(c) The authorities that cannot be delegated to State, local, or tribal agencies are as specified in paragraphs (c)(1) through (4) of this section.

(1) Approval of alternatives to the requirements in §§ 63.600, 63.602 through 63.604, and 63.609 and 63.610.

(2) Approval of major alternatives to test methods under § 63.7(e)(2)(ii) and (f), as defined in § 63.90, and as required in this subpart.

(3) Approval of major alternatives to monitoring under § 63.8(f), as defined in § 63.90, and as required in this subpart.

(4) Approval of major alternatives to recordkeeping and reporting under § 63.10(f), as defined in § 63.90, and as required in this subpart.

Subpart BB—[Amended]

31. Section 63.632 is added to Subpart BB to read as follows:

§ 63.632 Implementation and enforcement.

(a) This subpart can be implemented and enforced by the U.S. EPA, or a delegated authority such as the applicable State, local, or tribal agency. If the U.S. EPA Administrator has delegated authority to a State, local, or tribal agency, then that agency, in addition to the U.S. EPA, has the authority to implement and enforce this subpart. Contact the applicable U.S. EPA Regional Office to find out if implementation and enforcement of this subpart is delegated to a State, local, or tribal agency.

(b) In delegating implementation and enforcement authority of this subpart to a State, local, or tribal agency under subpart E of this part, the authorities contained in paragraph (c) of this section are retained by the Administrator of U.S. EPA and cannot be transferred to the State, local, or tribal agency.

(c) The authorities that cannot be delegated to State, local, or tribal agencies are as specified in paragraphs (c)(1) through (4) of this section.

(1) Approval of alternatives to the requirements in §§ 63.620, 63.622 through 63.624, and 63.629 through 63.631.

(2) Approval of major alternatives to test methods under § 63.7(e)(2)(ii) and (f), as defined in § 63.90, and as required in this subpart.

(3) Approval of major alternatives to monitoring under § 63.8(f), as defined in § 63.90, and as required in this subpart.

(4) Approval of major alternatives to recordkeeping and reporting under § 63.10(f), as defined in § 63.90, and as required in this subpart.

Subpart CC—[Amended]

32. Section 63.655 is added to Subpart CC to read as follows:

§ 63.655 Implementation and enforcement.

(a) This subpart can be implemented and enforced by the U.S. EPA, or a delegated authority such as the applicable State, local, or tribal agency. If the U.S. EPA Administrator has delegated authority to a State, local, or tribal agency, then that agency, in addition to the U.S. EPA, has the authority to implement and enforce this subpart. Contact the applicable U.S. EPA Regional Office to find out if implementation and enforcement of this subpart is delegated to a State, local, or tribal agency.

(b) In delegating implementation and enforcement authority of this subpart to a State, local, or tribal agency under subpart E of this part, the authorities contained in paragraph (c) of this section are retained by the Administrator of U.S. EPA and cannot be transferred to the State, local, or tribal agency.

(c) The authorities that cannot be delegated to State, local, or tribal agencies are as specified in paragraphs (c)(1) through (4) of this section.

(1) Approval of alternatives to the requirements in §§ 63.640, 63.642(g) through (l), 63.643, 63.646 through 63.648, and 63.649 through 63.652. Where these standards reference another subpart, the cited provisions will be delegated according to the delegation provisions of the referenced subpart. Where these standards reference another subpart and modify the requirements, the requirements shall be modified as described in this subpart. Delegation of the modified requirements will also occur according to the delegation provisions of the referenced subpart.

(2) Approval of major alternatives to test methods under § 63.7(e)(2)(ii) and (f), as defined in § 63.90, and as required in this subpart.

(3) Approval of major alternatives to monitoring under § 63.8(f), as defined in § 63.90, and as required in this subpart.

(4) Approval of major alternatives to recordkeeping and reporting under § 63.10(f), as defined in § 63.90, and as required in this subpart.

Subpart DD—[Amended]

33. Section 63.684 is amended by revising paragraph (e)(1) to read as follows:

§ 63.684 Standards: Off-Site material treatment.

* * * * *

(e) * * *

(1) A continuous monitoring system shall be installed and operated for each treatment that measures operating parameters appropriate for the treatment

process technology. This system shall include a continuous recorder that records the measured values of the selected operating parameters. The monitoring equipment shall be installed, calibrated, and maintained in accordance with the equipment manufacturer's specifications. The continuous recorder shall be a data recording device that is capable of recording either an instantaneous data value at least once every 15 minutes or an average value for intervals of 15 minutes or less.

* * * * *

34. Section 63.693 is amended by revising paragraphs (b)(4)(i) and (c)(2)(ii) to read as follows:

§ 63.693 Standards: closed-vent systems and control devices.

* * * * *

(b) * * *

(4) * * *

(i) A continuous monitoring system shall be installed and operated for each control device that measures operating parameters appropriate for the control device technology as specified in paragraphs (d) through (h) of this section. This system shall include a continuous recorder that records the measured values of the selected operating parameters. The monitoring equipment shall be installed, calibrated, and maintained in accordance with the equipment manufacturer's specifications. The continuous recorder shall be a data recording device that is capable of recording either an instantaneous data value at least once every 15 minutes or an average value for intervals of 15 minutes or less.

* * * * *

(c) * * *

(2) * * *

(ii) If a seal or locking device is used to comply with paragraph (c)(2) of this section, the device shall be placed on the mechanism by which the bypass device position is controlled (e.g., valve handle, damper lever) when the bypass device is in the closed position such that the bypass device cannot be opened without breaking the seal or removing the lock. Examples of such devices include, but are not limited to, a car-seal or a lock-and-key configuration valve.

* * * * *

35. Section 63.695 is amended by revising paragraphs (a)(4), adding paragraphs (c)(1)(ii)(C) and (D), and revising paragraph (e) introductory text to read as follows:

§ 63.695 Inspection and monitoring requirements.

* * * * *

(a) * * *

(4) To monitor and record off-site material treatment processes for compliance with the standards specified in 63.684(e), the monitoring procedures are specified in paragraph (e) of this section.

* * * * *

(c) * * *

(1) * * *

(ii) * * *

(C) The continuous monitoring system required by § 63.693(b)(4)(i) shall monitor and record either an instantaneous data value at least once very 15 minutes or an average value for intervals of 15 minutes or less.

(D) The owner or operator shall visually inspect the seal or closure mechanism required by § 63.693(c)(2)(ii) at least once every month to verify that the bypass mechanism is maintained in the closed position.

* * * * *

(e) The continuous monitoring system required by § 63.684(e)(1) shall monitor and record either an instantaneous data value at least once very 15 minutes or an average value for intervals of 15 minutes or less.

* * * * *

36. Section 63.698 is revised to read as follows:

§ 63.698 Implementation and enforcement.

(a) This subpart can be implemented and enforced by the U.S. EPA, or a delegated authority such as the applicable State, local, or tribal agency. If the U.S. EPA Administrator has delegated authority to a State, local, or tribal agency, then that agency, in addition to the U.S. EPA, has the authority to implement and enforce this subpart. Contact the applicable U.S. EPA Regional Office to find out if this subpart is delegated to a State, local, or tribal agency.

(b) In delegating implementation and enforcement authority of this subpart to a State, local, or tribal agency under subpart E of this part, the authorities contained in paragraph (c) of this section are retained by the Administrator of U.S. EPA and cannot be transferred to the State, local, or tribal agency.

(c) The authorities that cannot be delegated to State, local, or tribal agencies are as specified in paragraphs (c)(1) through (4) of this section.

(1) Approval of alternatives to the requirements in §§ 63.680, 63.684 through 63.691, and 63.693. Where these standards reference another subpart, the cited provisions will be delegated according to the delegation provisions of the referenced subpart.

(2) Approval of major alternatives to test methods under § 63.7(e)(2)(ii) and (f), as defined in § 63.90, and as required in this subpart.

(3) Approval of major alternatives to monitoring under § 63.8(f), as defined in § 63.90, and as required in this subpart.

(4) Approval of major alternatives to recordkeeping and reporting under § 63.10(f), as defined in § 63.90, and as required in this subpart.

Subpart EE—[Amended]

37. Section 63.708 is revised to read as follows:

§ 63.708 Implementation and enforcement.

(a) This subpart can be implemented and enforced by the U.S. EPA, or a delegated authority such as the applicable State, local, or tribal agency. If the U.S. EPA Administrator has delegated authority to a State, local, or tribal agency, then that agency, in addition to the U.S. EPA, has the authority to implement and enforce this subpart. Contact the applicable U.S. EPA Regional Office to find out if implementation and enforcement of this subpart is delegated to a State, local, or tribal agency.

(b) In delegating implementation and enforcement authority of this subpart to a State, local, or tribal agency under subpart E of this part, the authorities contained in paragraph (c) of this section are retained by the Administrator of U.S. EPA and cannot be transferred to the State, local, or tribal agency.

(c) The authorities that cannot be delegated to State, local, or tribal agencies are as specified in paragraphs (c)(1) through (4) of this section.

(1) Approval of alternatives to the requirements in §§ 63.701 and 63.703.

(2) Approval of major alternatives to test methods under § 63.7(e)(2)(ii) and (f), as defined in § 63.90, and as required in this subpart.

(3) Approval of major alternatives to monitoring under § 63.8(f), as defined in § 63.90, and as required in this subpart.

(4) Approval of major alternatives to recordkeeping and reporting under § 63.10(f), as defined in § 63.90, and as required in this subpart.

Subpart GG—[Amended]

38. Section 63.744 is amended:

a. By revising the first sentence of paragraph (a)(1).

b. By revising paragraph (a)(2).

c. Adding paragraph (a)(4).

The revisions and addition read as follows:

§ 63.744 Standards: Cleaning operations.

(a) * * *

(1) Unless the owner or operator satisfies the requirements in paragraph

(a)(4) of this section, place used solvent-laden cloth, paper, or any other absorbent applicators used for cleaning in bags or other closed containers.

* * *

(2) Unless the owner or operator satisfies the requirements in paragraph (a)(4) of this section, store fresh and spent cleaning solvents, except semi-aqueous solvent cleaners, used in aerospace cleaning operations in closed containers.

* * * * *

(4) Demonstrate to the Administrator (or delegated State, local, or tribal authority) that equivalent or better alternative measures are in place compared to the use of closed containers for the solvent-laden materials described in paragraph (a)(1) of this section, or the storage of solvents described in paragraph (a)(2) of this section.

* * * * *

39. Section 63.759 is added to Subpart GG to read as follows:

§ 63.759 Implementation and enforcement.

(a) This subpart can be implemented and enforced by the U.S. EPA, or a delegated authority such as the applicable State, local, or tribal agency. If the U.S. EPA Administrator has delegated authority to a State, local, or tribal agency, then that agency, in addition to the U.S. EPA, has the authority to implement and enforce this subpart. Contact the applicable U.S. EPA Regional Office to find out if implementation and enforcement of this subpart is delegated to a State, local, or tribal agency.

(b) In delegating implementation and enforcement authority of this subpart to a State, local, or tribal agency under subpart E of this part, the authorities contained in paragraph (c) of this section are retained by the Administrator of U.S. EPA and cannot be transferred to the State, local, or tribal agency.

(c) The authorities that cannot be delegated to State, local, or tribal agencies are as specified in paragraphs (c)(1) through (4) of this section.

(1) Approval of alternatives to the requirements in §§ 63.741, 63.743, 63.744(a)(3), (b) through (e), 63.745 through 63.748, and 63.649(a).

(2) Approval of major alternatives to test methods under § 63.7(e)(2)(ii) and (f), as defined in § 63.90, and as required in this subpart.

(3) Approval of major alternatives to monitoring under § 63.8(f), as defined in § 63.90, and as required in this subpart.

(4) Approval of major alternatives to recordkeeping and reporting under § 63.10(f), as defined in § 63.90, and as required in this subpart.

Subpart HH—[Amended]

40. Section 63.771 is amended by revising paragraphs (c)(3)(i)(A) and (B).

§ 63.771 Control equipment requirements.

* * * * *

(c) * * *

(3) * * *

(i) * * *

(A) At the inlet to the bypass device that could divert the stream away from the control device to the atmosphere, properly install, calibrate, maintain, and operate a flow indicator that is capable of taking periodic readings and sounding an alarm when the bypass device is open such that the stream is being, or could be, diverted away from the control device to the atmosphere; or

(B) Secure the bypass device valve installed at the inlet to the bypass device in the non-diverting position using a car-seal or a lock-and-key type configuration.

* * * * *

41. Section 63.773 is amended by revising paragraph (c)(2) introductory text and adding paragraph (c)(2)(iv) to read as follows:

§ 63.773 Inspection and monitoring requirements.

* * * * *

(c) * * *

(2) Except as provided in paragraphs (c)(5) and (6) of this section, each closed-vent system shall be inspected according to the procedures and schedule specified in paragraphs (c)(2)(i) and (ii) of this section, each cover shall be inspected according to the procedures and schedule specified in paragraph (c)(2)(iii) of this section, and each bypass device shall be inspected according to the procedures of (c)(2)(iv) of this section.

* * * * *

(iv) For each bypass device, except as provided for in § 63.771(c)(3)(ii), the owner or operator shall either:

(A) At the inlet to the bypass device that could divert the steam away from the control device to the atmosphere, set the flow indicator to take a reading at least once every 15 minutes; or

(B) If the bypass device valve installed at the inlet to the bypass device is secured in the non-diverting position using a car-seal or a lock-and-key type configuration, visually inspect the seal or closure mechanism at least once every month to verify that the valve is maintained in the non-diverting position and the vent stream is not diverted through the bypass device.

* * * * *

42. Section 63.776 is revised to read as follows:

§ 63.776 Implementation and enforcement.

(a) This subpart can be implemented and enforced by the U.S. EPA, or a delegated authority such as the applicable State, local, or tribal agency. If the U.S. EPA Administrator has delegated authority to a State, local, or tribal agency, then that agency, in addition to the U.S. EPA, has the authority to implement and enforce this subpart. Contact the applicable U.S. EPA Regional Office to find out if this subpart is delegated to a State, local, or tribal agency.

(b) In delegating implementation and enforcement authority of this subpart to a State, local, or tribal agency under subpart E of this part, the authorities contained in paragraph (c) of this section are retained by the Administrator of U.S. EPA and cannot be transferred to the State, local, or tribal agency.

(c) The authorities that cannot be delegated to State, local, or tribal agencies are as specified in paragraphs (c)(1) through (4) of this section.

(1) Approval of alternatives to the requirements in §§ 63.760, 63.765, 63.766, 63.769, 63.771, and 63.777.

(2) Approval of major alternatives to test methods under § 63.7(e)(2)(ii) and (f), as defined in § 63.90, and as required in this subpart.

(3) Approval of major alternatives to monitoring under § 63.8(f), as defined in § 63.90, and as required in this subpart.

(4) Approval of major alternatives to recordkeeping and reporting under § 63.10(f), as defined in § 63.90, and as required in this subpart.

Subpart II—[Amended]

43. Section 63.789 is added to Subpart II to read as follows:

§ 63.789 Implementation and enforcement.

(a) This subpart can be implemented and enforced by the U.S. EPA, or a delegated authority such as the applicable State, local, or tribal agency. If the U.S. EPA Administrator has delegated authority to a State, local, or tribal agency, then that agency, in addition to the U.S. EPA, has the authority to implement and enforce this subpart. Contact the applicable U.S. EPA Regional Office to find out if implementation and enforcement of this subpart is delegated to a State, local, or tribal agency.

(b) In delegating implementation and enforcement authority of this subpart to a State, local, or tribal agency under subpart E of this part, the authorities contained in paragraph (c) of this

section are retained by the Administrator of U.S. EPA and cannot be transferred to the State, local, or tribal agency.

(c) The authorities that cannot be delegated to State, local, or tribal agencies are as specified in paragraphs (c)(1) through (4) of this section.

(1) Approval of alternatives to the requirements in §§ 63.780 and 63.781, and 63.783 and 63.784.

(2) Approval of major alternatives to test methods under § 63.7(e)(2)(ii) and (f), as defined in § 63.90, and as required in this subpart.

(3) Approval of major alternatives to monitoring under § 63.8(f), as defined in § 63.90, and as required in this subpart.

(4) Approval of major alternatives to recordkeeping and reporting under § 63.10(f), as defined in § 63.90, and as required in this subpart.

Subpart JJ—[Amended]

44. Section 63.803 is amended by revising paragraph (c) introductory text, paragraphs (c)(1) through (3), and paragraphs (c)(4) introductory text to read as follows:

§ 63.803 Work practice standards.

* * * * *

(c) Each owner or operator of an affected source shall prepare and maintain with the work practice implementation plan a written leak inspection and maintenance plan that specifies:

(1) A minimum visual inspection frequency of once per month for all equipment used to transfer or apply coating, adhesives, or organic solvents;

(2) An inspection schedule;

(3) Methods for documenting the data and results of each inspection and any repairs that were made;

(4) The time frame between identifying the leak and making the repair, which adheres, at a minimum, to the following schedule:

* * * * *

45. Section 63.808 is revised to read as follows:

§ 63.808 Implementation and enforcement.

(a) This subpart can be implemented and enforced by the U.S. EPA, or a delegated authority such as the applicable State, local, or tribal agency. If the U.S. EPA Administrator has delegated authority to a State, local, or tribal agency, then that agency, in addition to the U.S. EPA, has the authority to implement and enforce this subpart. Contact the applicable U.S. EPA Regional Office to find out if implementation and enforcement of this subpart is delegated to a State, local, or tribal agency.

(b) In delegating implementation and enforcement authority of this subpart to a State, local, or tribal agency under subpart E of this part, the authorities contained in paragraph (c) of this section are retained by the Administrator of U.S. EPA and cannot be transferred to the State, local, or tribal agency.

(c) The authorities that cannot be delegated to State, local, or tribal agencies are as specified in paragraphs (c)(1) through (5) of this section.

(1) Approval of alternatives to the requirements in §§ 63.800, 63.802, and 63.803 (a) and (b), (c)(1), and (d) through (l).

(2) Approval of alternatives to the monitoring and compliance requirements in §§ 63.804(f)(4)(iv)(D) and (E), 63.804(g)(4)(iii)(C), 63.804(g)(4)(vi), and 63.804(g)(6)(vi).

(3) Approval of major alternatives to test methods under § 63.7(e)(2)(ii) and (f), as defined in § 63.90, and as required in this subpart, as well as approval of any alternatives to the specific test methods under §§ 63.805(a), 63.805(d)(2)(v), and 63.805(e)(1).

(4) Approval of major alternatives to monitoring under § 63.8(f), as defined in § 63.90, and as required in this subpart.

(5) Approval of major alternatives to recordkeeping and reporting under § 63.10(f), as defined in § 63.90, and as required in this subpart.

Subpart KK—[Amended]

46. Section 63.831 is revised to read as follows:

§ 63.831 Implementation and enforcement.

(a) This subpart can be implemented and enforced by the U.S. EPA, or a delegated authority such as the applicable State, local, or tribal agency. If the U.S. EPA Administrator has delegated authority to a State, local, or tribal agency, then that agency, in addition to the U.S. EPA, has the authority to implement and enforce this subpart. Contact the applicable U.S. EPA Regional Office to find out if this subpart is delegated to a State, local, or tribal agency.

(b) In delegating implementation and enforcement authority of this subpart to a State, local, or tribal agency under subpart E of this part, the authorities contained in paragraph (c) of this section are retained by the Administrator of U.S. EPA and cannot be transferred to the State, local, or tribal agency.

(c) The authorities that cannot be delegated to State, local, or tribal agencies are as specified in paragraphs (c)(1) through (4) of this section.

(1) Approval of alternatives to the requirements in §§ 63.820 and 63.821 and 63.824 through 63.826.

(2) Approval of alternatives to the test method for organic HAP content determination in § 63.827(b) and alternatives to the test method for volatile matter in § 63.827(c), and major alternatives to other test methods under § 63.7(e)(2)(ii) and (f), as defined in § 63.90, and as required in this subpart.

(3) Approval of major alternatives to monitoring under § 63.8(f), as defined in § 63.90, and as required in this subpart.

(4) Approval of major alternatives to recordkeeping and reporting under § 63.10(f), as defined in § 63.90, and as required in this subpart.

Subpart LL—[Amended]

47. Section 63.853 is revised to read as follows:

§ 63.853 Implementation and enforcement.

(a) This subpart can be implemented and enforced by the U.S. EPA, or a delegated authority such as the applicable State, local, or tribal agency. If the U.S. EPA Administrator has delegated authority to a State, local, or tribal agency, then that agency, in addition to the U.S. EPA, has the authority to implement and enforce this regulation. Contact the applicable U.S. EPA Regional Office to find out if this subpart is delegated to a State, local, or tribal agency.

(b) In delegating implementation and enforcement authority of this subpart to a State, local, or tribal agency under subpart E of this part, the authorities contained in paragraph (c) of this section are retained by the Administrator of U.S. EPA and cannot be transferred to the State, local, or tribal agency.

(c) The authorities that cannot be delegated to State, local, or tribal agencies are as specified in paragraphs (c)(1) through (4) of this section.

(1) Approval of alternatives to the requirements in §§ 63.840, 63.843 and 63.844, 63.845(b) through (e), (h) and (i), and 63.846.

(2) Approval of major alternatives to test methods under § 63.7(e)(2)(ii) and (f), as defined in § 63.90, and as required in this subpart.

(3) Approval of major alternatives to monitoring under § 63.8(f), as defined in § 63.90, and as required in this subpart.

(4) Approval of major alternatives to recordkeeping and reporting under § 63.10(f), as defined in § 63.90, and as required in this subpart.

Subpart OO—[Amended]

48. Section 63.908 is added to Subpart OO to read as follows:

§ 63.908 Implementation and enforcement.

(a) This subpart can be implemented and enforced by the U.S. EPA, or a delegated authority such as the applicable State, local, or tribal agency. If the U.S. EPA Administrator has delegated authority to a State, local, or tribal agency, then that agency, in addition to the U.S. EPA, has the authority to implement and enforce this subpart. Contact the applicable U.S. EPA Regional Office to find out if this subpart is delegated to a State, local, or tribal agency.

(b) In delegating implementation and enforcement authority of this subpart to a State, local, or tribal agency under subpart E of this part, the authorities contained in paragraph (c) of this section are retained by the Administrator of U.S. EPA and cannot be transferred to the State, local, or tribal agency.

(c) The authorities that cannot be delegated to State, local, or tribal agencies are as specified in paragraphs (c)(1) through (4) of this section.

(1) Approval of alternatives to the requirements in §§ 63.900 and 63.902.

(2) Approval of major alternatives to test methods under § 63.7(e)(2)(ii) and (f), as defined in § 63.90, and as required in this subpart.

(3) Approval of major alternatives to monitoring under § 63.8(f), as defined in § 63.90, and as required in this subpart.

(4) Approval of major alternatives to recordkeeping and reporting under § 63.10(f), as defined in § 63.90, and as required in this subpart.

Subpart PP—[Amended]

49. Section 63.929 is added to Subpart PP to read as follows:

§ 63.929 Implementation and enforcement.

(a) This subpart can be implemented and enforced by the U.S. EPA, or a delegated authority such as the applicable State, local, or tribal agency. If the U.S. EPA Administrator has delegated authority to a State, local, or tribal agency, then that agency, in addition to the U.S. EPA, has the authority to implement and enforce this subpart. Contact the applicable U.S. EPA Regional Office to find out if this subpart is delegated to a State, local, or tribal agency.

(b) In delegating implementation and enforcement authority of this subpart to a State, local, or tribal agency under subpart E of this part, the authorities contained in paragraph (c) of this section are retained by the Administrator of U.S. EPA and cannot be transferred to the State, local, or tribal agency.

(c) The authorities that cannot be delegated to State, local, or tribal agencies are as specified in paragraphs (c)(1) through (4) of this section.

(1) Approval of alternatives to the requirements in §§ 63.920 and 63.922 through 63.924. Where these standards reference another subpart, the cited provisions will be delegated according to the delegation provisions of the referenced subpart.

(2) Approval of major alternatives to test methods under § 63.7(e)(2)(ii) and (f), as defined in § 63.90, and as required in this subpart.

(3) Approval of major alternatives to monitoring under § 63.8(f), as defined in § 63.90, and as required in this subpart.

(4) Approval of major alternatives to recordkeeping and reporting under § 63.10(f), as defined in § 63.90, and as required in this subpart.

Subpart QQ—[Amended]

50. Section 63.949 is added to Subpart QQ to read as follows:

§ 63.949 Implementation and enforcement.

(a) This subpart can be implemented and enforced by the U.S. EPA, or a delegated authority such as the applicable State, local, or tribal agency. If the U.S. EPA Administrator has delegated authority to a State, local, or tribal agency, then that agency, in addition to the U.S. EPA, has the authority to implement and enforce this subpart. Contact the applicable U.S. EPA Regional Office to find out if this subpart is delegated to a State, local, or tribal agency.

(b) In delegating implementation and enforcement authority of this subpart to a State, local, or tribal agency under subpart E of this part, the authorities contained in paragraph (c) of this section are retained by the Administrator of U.S. EPA and cannot be transferred to the State, local, or tribal agency.

(c) The authorities that cannot be delegated to State, local, or tribal agencies are as specified in paragraphs (c)(1) through (4) of this section.

(1) Approval of alternatives to the requirements in §§ 63.940, 63.942, and 63.943. Where these standards reference subpart DD, the cited provisions will be delegated according to the delegation provisions of subpart DD.

(2) Approval of major alternatives to test methods under § 63.7(e)(2)(ii) and (f), as defined in § 63.90, and as required in this subpart.

(3) Approval of major alternatives to monitoring under § 63.8(f), as defined in § 63.90, and as required in this subpart.

(4) Approval of major alternatives to recordkeeping and reporting under § 63.10(f), as defined in § 63.90, and as required in this subpart.

Subpart RR—[Amended]

51. Section 63.967 is added to Subpart RR to read as follows:

§ 63.967 Implementation and enforcement.

(a) This subpart can be implemented and enforced by the U.S. EPA, or a delegated authority such as the applicable State, local, or tribal agency. If the U.S. EPA Administrator has delegated authority to a State, local, or tribal agency, then that agency, in addition to the U.S. EPA, has the authority to implement and enforce this subpart. Contact the applicable U.S. EPA Regional Office to find out if this subpart is delegated to a State, local, or tribal agency.

(b) In delegating implementation and enforcement authority of this subpart to a State, local, or tribal agency under subpart E of this part, the authorities contained in paragraph (c) of this section are retained by the Administrator of U.S. EPA and cannot be transferred to the State, local, or tribal agency.

(c) The authorities that cannot be delegated to State, local, or tribal agencies are as specified in paragraphs (c)(1) through (4) of this section.

(1) Approval of alternatives to the requirements in §§ 63.960 and 63.962. Where these standards reference subpart DD, the cited provisions will be delegated according to the delegation provisions subpart DD of this part.

(2) Approval of major alternatives to test methods under § 63.7(e)(2)(ii) and (f), as defined in § 63.90, and as required in this subpart.

(3) Approval of major alternatives to monitoring under § 63.8(f), as defined in § 63.90, and as required in this subpart.

(4) Approval of major alternatives to recordkeeping and reporting under § 63.10(f), as defined in § 63.90, and as required in this subpart.

Subpart VV—[Amended]

52. Section 63.1050 is added to Subpart VV to read as follows:

§ 63.1050 Implementation and enforcement.

(a) This subpart can be implemented and enforced by the U.S. EPA, or a delegated authority such as the applicable State, local, or tribal agency. If the U.S. EPA Administrator has delegated authority to a State, local, or tribal agency, then that agency, in addition to the U.S. EPA, has the authority to implement and enforce this subpart. Contact the applicable U.S.

EPA Regional Office to find out if this subpart is delegated to a State, local, or tribal agency.

(b) In delegating implementation and enforcement authority of this subpart to a State, local, or tribal agency under subpart E of this part, the authorities contained in paragraph (c) of this section are retained by the Administrator of U.S. EPA and cannot be transferred to the State, local, or tribal agency.

(c) The authorities that cannot be delegated to State, local, or tribal agencies are as specified in paragraphs (c)(1) through (4) of this section.

(1) Approval of alternatives to the requirements in §§ 63.1040 and 63.1042 through 63.1044. Where these standards reference subpart DD, the cited provisions will be delegated according to the delegation provisions of subpart DD of this part.

(2) Approval of major alternatives to test methods under § 63.7(e)(2)(ii) and (f), as defined in § 63.90, and as required in this subpart.

(3) Approval of major alternatives to monitoring under § 63.8(f), as defined in § 63.90, and as required in this subpart.

(4) Approval of major alternatives to recordkeeping and reporting under § 63.10(f), as defined in § 63.90, and as required in this subpart.

Subpart CCC—[Amended]

53. Section 63.1166 is revised to read as follows:

§ 63.1166 Implementation and enforcement.

(a) This subpart can be implemented and enforced by the U.S. EPA, or a delegated authority such as the applicable State, local, or tribal agency. If the U.S. EPA Administrator has delegated authority to a State, local, or tribal agency, then that agency, in addition to the U.S. EPA, has the authority to implement and enforce this subpart. Contact the applicable U.S. EPA Regional Office to find out if implementation and enforcement of this subpart is delegated to a State, local, or tribal agency.

(b) In delegating implementation and enforcement authority of this subpart to a State, local, or tribal agency under subpart E of this part, the authorities contained in paragraph (c) of this section are retained by the Administrator of U.S. EPA and cannot be transferred to the State, local, or tribal agency.

(c) The authorities that cannot be delegated to State, local, or tribal agencies are as specified in paragraphs (c)(1) through (8) of this section.

(1) Approval of alternatives to the requirements in §§ 63.1155 and 63.1157 through 63.1159.

(2) Approval of major alternatives to test methods under § 63.7(e)(2)(ii) and (f), as defined in § 63.90, and as required in this subpart.

(3) Approval of any alternative measurement methods for HCl and CL2 to those specified in § 63.1161(d)(1).

(4) Approval of major alternatives to monitoring under § 63.8(f), as defined in § 63.90, and as required in this subpart.

(5) Approval of any alternative monitoring requirements to those specified in §§ 63.1162(a)(2) through (5) and 63.1162(b)(1) through (3).

(6) Approval of major alternatives to recordkeeping and reporting under § 63.10(f), as defined in § 63.90, and as required in this subpart.

(7) Waiver of recordkeeping requirements specified in § 63.1165.

(8) Approval of an alternative schedule for conducting performance tests to the requirement specified in § 63.1162(a)(1).

Subpart DDD—[Amended]

54. Section 63.1195 is revised to read as follows:

§ 63.1195 Who implements and enforces this subpart?

(a) This subpart can be implemented and enforced by the U.S. EPA, or a delegated authority such as the applicable State, local, or tribal agency. If the U.S. EPA Administrator has delegated authority to a State, local, or tribal agency, then that agency, in addition to the U.S. EPA, has the authority to implement and enforce this subpart. Contact the applicable U.S. EPA Regional Office to find out if implementation and enforcement of this subpart is delegated to a State, local, or tribal agency.

(b) In delegating implementation and enforcement authority of this subpart to a State, local, or tribal agency under subpart E of this part, the authorities contained in paragraph (c) of this section are retained by the Administrator of U.S. EPA and cannot be transferred to the State, local, or tribal agency.

(c) The authorities that cannot be delegated to State, local, or tribal agencies are as specified in paragraphs (c)(1) through (4) of this section.

(1) Approval of alternatives to the requirements in §§ 63.1177 through 63.1179.

(2) Approval of major alternatives to test methods under § 63.7(e)(2)(ii) and (f), as defined in § 63.90, and as required in this subpart.

(3) Approval of major alternatives to monitoring under § 63.8(f), as defined in § 63.90, and as required in this subpart.

(4) Approval of major alternatives to recordkeeping and reporting under § 63.10(f), as defined in § 63.90, and as required in this subpart.

Subpart EEE—[Amended]

55. Section 63.1214 is added to Subpart EEE to read as follows:

§ 63.1214 Implementation and enforcement.

(a) This subpart can be implemented and enforced by the U.S. EPA, or a delegated authority such as the applicable State, local, or tribal agency. If the U.S. EPA Administrator has delegated authority to a State, local, or tribal agency, then that agency, in addition to the U.S. EPA, has the authority to implement and enforce this subpart. Contact the applicable U.S. EPA Regional Office to find out if this subpart is delegated to a State, local, or tribal agency.

(b) In delegating implementation and enforcement authority of this subpart to a State, local, or tribal agency under subpart E of this part, the authorities contained in paragraph (c) of this section are retained by the Administrator of U.S. EPA and cannot be transferred to the State, local, or tribal agency.

(c) The authorities that cannot be delegated to State, local, or tribal agencies are as specified in paragraphs (c)(1) through (4) of this section.

(1) Approval of alternatives to requirements in §§ 63.1200 and 63.1203 through 63.1205.

(2) Approval of major alternatives to test methods under § 63.7(e)(2)(ii) and (f), as defined in § 63.90, and as required in this subpart.

(3) Approval of major alternatives to monitoring under § 63.8(f), as defined in § 63.90, and as required in this subpart.

(4) Approval of major alternatives to recordkeeping and reporting under § 63.10(f), as defined in § 63.90, and as required in this subpart.

Subpart GGG—[Amended]

56. Section 63.1261 is revised to read as follows:

§ 63.1261 Implementation and enforcement.

(a) This subpart can be implemented and enforced by the U.S. EPA, or a delegated authority such as the applicable State, local, or tribal agency. If the U.S. EPA Administrator has delegated authority to a State, local, or tribal agency, then that agency, in

addition to the U.S. EPA, has the authority to implement and enforce this subpart. Contact the applicable U.S. EPA Regional Office to find out if implementation and enforcement of this subpart is delegated to a State, local, or tribal agency.

(b) In delegating implementation and enforcement authority of this subpart to a State, local, or tribal agency under subpart E of this part, the authorities contained in paragraph (c) of this section are retained by the Administrator of U.S. EPA and cannot be transferred to the State, local, or tribal agency.

(c) The authorities that cannot be delegated to State, local, or tribal agencies are as specified in paragraphs (c)(1) through (4) of this section.

(1) Approval of alternatives to the requirements in §§ 63.1250 and 63.1252 through 63.1256. Where these standards reference another subpart, the cited provisions will be delegated according to the delegation provisions of the referenced subpart.

(2) Approval of major alternatives to test methods under § 63.7(e)(2)(ii) and (f), as defined in § 63.90, and as required in this subpart.

(3) Approval of major alternatives to monitoring under § 63.8(f), as defined in § 63.90, and as required in this subpart.

(4) Approval of major alternatives to recordkeeping and reporting under § 63.10(f), as defined in § 63.90, and as required in this subpart.

Subpart HHH—[Amended]

57. Section 63.1281 is amended by revising paragraphs (c)(3)(i)(A) and (B) to read:

§ 63.1281 Control equipment requirements.

* * * * *

(c) * * *

(3) * * *

(i) * * *

(A) At the inlet to the bypass device that could divert the stream away from the control device to the atmosphere, properly install, calibrate, maintain, and operate a flow indicator that is capable of taking periodic readings and sounding an alarm when the bypass device is open such that the stream is being, or could be, diverted away from the control device to the atmosphere; or

(B) Secure the bypass device valve installed at the inlet to the bypass device in the non-diverting position using a car-seal or a lock-and-key type configuration.

* * * * *

58. Section 13.1283 is amended by revising paragraph (c)(2) introductory text and adding paragraph (c)(2)(iii) to read as follows:

§ 63.1283 Inspection and monitoring requirements.

* * * * *

(c) * * *

(2) Except as provided in paragraphs (c)(5) and (6) of this section, each closed-vent system shall be inspected according to the procedures and schedule specified in paragraphs (c)(2)(i) and (ii) of this section and each bypass device shall be inspected according to the procedures of (c)(2)(iii) of this section.

* * * * *

(iii) For each bypass device, except as provided for in § 63.1281(c)(3)(ii), the owner or operator shall either:

(A) At the inlet to the bypass device that could divert the stream away from the control device to the atmosphere, set the flow indicator to take a reading at least once every 15 minutes; or

(B) If the bypass device valve installed at the inlet to the bypass device is secured in the non-diverting position using a car-seal or a lock-and-key type configuration, visually inspect the seal or closure mechanism at least once every month to verify that the valve is maintained in the non-diverting position and the vent stream is not diverted through the bypass device.

* * * * *

59. Section 63.1286 is revised to read as follows:

§ 63.1286 Implementation and enforcement.

(a) This subpart can be implemented and enforced by the U.S. EPA, or a delegated authority such as the applicable State, local, or tribal agency. If the U.S. EPA Administrator has delegated authority to a State, local, or tribal agency, then that agency, in addition to the U.S. EPA, has the authority to implement and enforce this subpart. Contact the applicable U.S. EPA Regional Office to find out if this subpart is delegated to a State, local, or tribal agency.

(b) In delegating implementation and enforcement authority of this subpart to a State, local, or tribal agency under subpart E of this part, the authorities contained in paragraph (c) of this section are retained by the Administrator of U.S. EPA and cannot be transferred to the State, local, or tribal agency.

(c) The authorities that cannot be delegated to State, local, or tribal agencies are as specified in paragraphs (c)(1) through (4) of this section.

(1) Approval of alternatives to the requirements in §§ 63.1270, 63.1275, 63.1281, and 63.1287.

(2) Approval of major alternatives to test methods under § 63.7(e)(2)(ii) and (f), as defined in § 63.90, and as required in this subpart.

(3) Approval of major alternatives to monitoring under § 63.8(f), as defined in § 63.90, and as required in this subpart.

(4) Approval of major alternatives to recordkeeping and reporting under § 63.10(f), as defined in § 63.90, and as required in this subpart.

Subpart III—[Amended]

60. Section 63.1309 is revised to read as follows:

§ 63.1309 Implementation and enforcement.

(a) This subpart can be implemented and enforced by the U.S. EPA, or a delegated authority such as the applicable State, local, or tribal agency. If the U.S. EPA Administrator has delegated authority to a State, local, or tribal agency, then that agency, in addition to the U.S. EPA, has the authority to implement and enforce this subpart. Contact the applicable U.S. EPA Regional Office to find out if implementation and enforcement of this subpart is delegated to a State, local, or tribal agency.

(b) In delegating implementation and enforcement authority of this subpart to a State, local, or tribal agency under subpart E of this part, the authorities contained in paragraph (c) of this section are retained by the Administrator of U.S. EPA and cannot be transferred to the State, local, or tribal agency.

(c) The authorities that cannot be delegated to State, local, or tribal agencies are as specified in paragraphs (c)(1) through (5) of this section.

(1) Approval of alternatives to the requirements in §§ 63.1290, 63.1293 through 63.1301, and 63.1305.

(2) Approval of major alternatives to test methods under § 63.7(e)(2)(ii) and (f), as defined in § 63.90, and as required in this subpart.

(3) Approval of major alternatives to monitoring under § 63.8(f), as defined in § 63.90, and as required in this subpart.

(4) Approval of alternatives to the specific monitoring requirements of § 63.1303(b)(5).

(5) Approval of major alternatives to recordkeeping and reporting under § 63.10(f), as defined in § 63.90, and as required in this subpart.

Subpart JJJ—[Amended]

61. Section 63.1336 is added to Subpart JJJ to read as follows:

§ 63.1336 Implementation and enforcement.

(a) This subpart can be implemented and enforced by the U.S. EPA, or a delegated authority such as the applicable State, local, or tribal agency. If the U.S. EPA Administrator has delegated authority to a State, local, or tribal agency, then that agency, in addition to the U.S. EPA, has the authority to implement and enforce this subpart. Contact the applicable U.S. EPA Regional Office to find out if this subpart is delegated to a State, local, or tribal agency.

(b) In delegating implementation and enforcement authority of this subpart to a State, local, or tribal agency under subpart E of this part, the authorities contained in paragraph (c) of this section are retained by the Administrator of U.S. EPA and cannot be transferred to the State, local, or tribal agency.

(c) The authorities that cannot be delegated to State, local, or tribal agencies are as specified in paragraphs (c)(1) through (4) of this section.

(1) Approval of alternatives to the requirements in §§ 63.1310 and 63.1311, 63.1313 through 63.1315(a)(1) through (9), (a)(11) through (18), (b) through (e), 63.1316, 63.1321 and 63.1322, 63.1323(a), (b)(1) through (4), (b)(5)(iv) and (v), (b)(6) and (7), (c) through (j), and 63.1328 through 63.1331. Where these standards reference another subpart, the cited provisions will be delegated according to the delegation provisions of the referenced subpart. Where these standards reference another subpart and modify the requirements, the requirements shall be modified as described in this subpart. Delegation of the modified requirements will also occur according to the delegation provisions of the referenced subpart.

(2) Approval of major alternatives to test methods under § 63.7(e)(2)(ii) and (f), as defined in § 63.90, and as required in this subpart.

(3) Approval of major alternatives to monitoring under § 63.8(f), as defined in § 63.90, and as required in this subpart.

(4) Approval of major alternatives to recordkeeping and reporting under § 63.10(f), as defined in § 63.90, and as required in this subpart.

Subpart LLL—[Amended]

62. Section 63.1358 is revised to read as follows:

§ 63.1358 Implementation and enforcement.

(a) This subpart can be implemented and enforced by the U.S. EPA, or a delegated authority such as the applicable State, local, or tribal agency. If the U.S. EPA Administrator has delegated authority to a State, local, or tribal agency, then that agency, in addition to the U.S. EPA, has the authority to implement and enforce this subpart. Contact the applicable U.S. EPA Regional Office to find out if this subpart is delegated to a State, local, or tribal agency.

(b) In delegating implementation and enforcement authority of this subpart to a State, local, or tribal agency under subpart E of this part, the authorities contained in paragraph (c) of this section are retained by the Administrator of U.S. EPA and cannot be transferred to the State, local, or tribal agency.

(c) The authorities that cannot be delegated to State, local, or tribal agencies are as specified in paragraphs (c)(1) through (4) of this section.

(1) Approval of alternatives to the requirements in §§ 63.1340 and 63.1343 through 63.1348.

(2) Approval of major alternatives to test methods under § 63.7(e)(2)(ii) and (f), as defined in § 63.90, and as required in this subpart.

(3) Approval of major alternatives to monitoring under § 63.8(f), as defined in § 63.90, and as required in this subpart.

(4) Approval of major alternatives to recordkeeping and reporting under § 63.10(f), as defined in § 63.90, and as required in this subpart.

Subpart MMM—[Amended]

63. Section 63.1362 is amended by revising paragraphs (j)(1) and (j)(2) to read as follows:

§ 63.1362 Standards.

* * * * *

(j) * * *

(1) Install, calibrate, maintain, and operate a flow indicator that is capable of determining whether vent stream flow is present and taking frequent, periodic readings. Records shall be maintained as specified in § 63.1367(f)(1). The flow indicator shall be installed at the entrance to any bypass line that could divert the vent stream away from the control device to the atmosphere; or

(2) Secure the bypass line valve in the closed position with a car-seal or lock-and-key type configuration. Records shall be maintained as specified in § 63.1367(f)(2).

* * * * *

64. Section 63.1366 is amended by revising paragraph (b)(1)(xiii) to read as follows:

§ 63.1366 Monitoring and inspection requirements.

* * * * *

(b) * * *

(1) * * *

(xiii) *Closed-vent system visual inspections.* The owner or operator shall comply with the requirements in either paragraph (b)(1)(xiii)(A) or (B) of this section:

(A) Set the flow indicator at the entrance to any bypass line that could divert the stream away from the control device to the atmosphere to take a reading at least once every 15 minutes; or

(B) If the bypass device valve installed at the inlet to the bypass device is secured in the closed position with a car-seal or lock-and-key type configuration, visually inspect the seal or closure mechanism at least once every month to verify that the valve is maintained in the closed position and the vent stream is not diverted through the bypass line.

* * * * *

65. Section 63.1369 is revised to read as follows:

§ 63.1369 Implementation and enforcement.

(a) This subpart can be implemented and enforced by the U.S. EPA, or a delegated authority such as the applicable State, local, or tribal agency. If the U.S. EPA Administrator has delegated authority to a State, local, or tribal agency, then that agency, in addition to the U.S. EPA, has the authority to implement and enforce this subpart. Contact the applicable U.S. EPA Regional Office to find out if implementation and enforcement of this subpart is delegated to a State, local, or tribal agency.

(b) In delegating implementation and enforcement authority of this subpart to a State, local, or tribal agency under subpart E of this part, the authorities contained in paragraph (c) of this section are retained by the Administrator of U.S. EPA and cannot be transferred to the State, local, or tribal agency.

(c) The authorities that cannot be delegated to State, local, or tribal agencies are as specified in paragraphs (c)(1) through (4) of this section.

(1) Approval of alternatives to the requirements in §§ 63.1360 and 63.1362 and 63.1363. Where these standards reference another subpart, the cited provisions will be delegated according to the delegation provisions of the referenced subpart. Where these standards reference another subpart and modify the requirements, the requirements shall be modified as described in this subpart. Delegation of the modified requirements will also

occur according to the delegation provisions of the referenced subpart.

(2) Approval of major alternatives to test methods for under § 63.7(e)(2)(ii) and (f), as defined in § 63.90, and as required in this subpart.

(3) Approval of major alternatives to monitoring under § 63.8(f), as defined in § 63.90, and as required in this subpart.

(4) Approval of major alternatives to recordkeeping and reporting under § 63.10(f), as defined in § 63.90, and as required in this subpart.

Subpart NNN—[Amended]

66. Section 63.1388 is added to Subpart NNN to read as follows:

§ 63.1388 Implementation and enforcement.

(a) This subpart can be implemented and enforced by the U.S. EPA, or a delegated authority such as the applicable State, local, or tribal agency. If the U.S. EPA Administrator has delegated authority to a State, local, or tribal agency, then that agency, in addition to the U.S. EPA, has the authority to implement and enforce this subpart. Contact the applicable U.S. EPA Regional Office to find out if implementation and enforcement of this subpart is delegated to a State, local, or tribal agency.

(b) In delegating implementation and enforcement authority of this subpart to a State, local, or tribal agency under subpart E of this part, the authorities contained in paragraph (c) of this section are retained by the Administrator of U.S. EPA and cannot be transferred to the State, local, or tribal agency.

(c) The authorities that cannot be delegated to State, local, or tribal agencies are as specified in paragraphs (c)(1) through (4) of this section.

(1) Approval of alternatives to the requirements in §§ 63.1380 and 63.1382.

(2) Approval of major alternatives to test methods under § 63.7(e)(2)(ii) and (f), as defined in § 63.90, and as required in this subpart.

(3) Approval of major alternatives to monitoring under § 63.8(f), as defined in § 63.90, and as required in this subpart.

(4) Approval of major alternatives to recordkeeping and reporting under § 63.10(f), as defined in § 63.90, and as required in this subpart.

Subpart OOO—[Amended]

67. Section 63.1419 is revised to read as follows:

§ 63.1419 Implementation and enforcement.

(a) This subpart can be implemented and enforced by the U.S. EPA, or a delegated authority such as the applicable State, local, or tribal agency. If the U.S. EPA Administrator has delegated authority to a State, local, or tribal agency, then that agency, in addition to the U.S. EPA, has the authority to implement and enforce this subpart. Contact the applicable U.S. EPA Regional Office to find out if implementation and enforcement of this subpart is delegated to a State, local, or tribal agency.

(b) In delegating implementation and enforcement authority of this subpart to a State, local, or tribal agency under subpart E of this part, the authorities contained in paragraph (c) of this section are retained by the Administrator of U.S. EPA and cannot be transferred to the State, local, or tribal agency.

(c) The authorities that cannot be delegated to State, local, or tribal agencies are as specified in paragraphs (c)(1) through (4) of this section.

(1) Approval of alternatives to the requirements in §§ 63.1400 and 63.1401 and 63.1404 through 63.1410. Where these standards reference another subpart, the cited provisions will be delegated according to the delegation provisions of the referenced subpart. Where these standards reference another subpart and modify the requirements, the requirements shall be modified as described in this subpart. Delegation of the modified requirements will also occur according to the delegation provisions of the referenced subpart.

(2) Approval of major alternatives to test methods under § 63.7(e)(2)(ii) and (f), as defined in § 63.90, and as required in this subpart.

(3) Approval of major alternatives to monitoring under § 63.8(f), as defined in § 63.90, and as required in this subpart.

(4) Approval of major alternatives to recordkeeping and reporting under § 63.10(f), as defined in § 63.90, and as required in this subpart.

Subpart PPP—[Amended]

68. Section 63.1421 is revised to read as follows:

§ 63.1421 Implementation and enforcement.

(a) This subpart can be implemented and enforced by the U.S. EPA, or a delegated authority such as the applicable State, local, or tribal agency. If the U.S. EPA Administrator has delegated authority to a State, local, or tribal agency, then that agency, in addition to the U.S. EPA, has the authority to implement and enforce this subpart. Contact the applicable U.S. EPA Regional Office to find out if this subpart is delegated to a State, local, or tribal agency.

(b) In delegating implementation and enforcement authority of this subpart to a State, local, or tribal agency under subpart E of this part, the authorities contained in paragraph (c) of this section are retained by the Administrator of U.S. EPA and cannot be transferred to the State, local, or tribal agency.

(c) The authorities that cannot be delegated to State, local, or tribal agencies are as specified in paragraphs (c)(1) through (4) of this section.

(1) Approval of alternatives to the requirements in §§ 63.1420, 63.1422, 63.1424 through 63.1428, and 63.1432 through 63.1436. Where these standards reference another subpart, the cited provisions will be delegated according to the delegation provisions of the referenced subpart. Where these standards reference another subpart and modify the requirements, the requirements shall be modified as described in this subpart. Delegation of the modified requirements will also occur according to the delegation provisions of the referenced subpart.

(2) Approval of major alternatives to test methods under § 63.7(e)(2)(ii) and (f), as defined in § 63.90, and as required in this subpart.

(3) Approval of major alternatives to monitoring under § 63.8(f), as defined in § 63.90, and as required in this subpart.

(4) Approval of major alternatives to recordkeeping and reporting under § 63.10(f), as defined in § 63.90, and as required in this subpart.

Subpart RRR—[Amended]

69. Section 63.1519 is revised to read as follows:

§ 63.1519 Implementation and enforcement.

(a) This subpart can be implemented and enforced by the U.S. EPA, or a delegated authority such as the applicable State, local, or tribal agency. If the U.S. EPA Administrator has delegated authority to a State, local, or tribal agency, then that agency, in addition to the U.S. EPA, has the authority to implement and enforce this regulation. Contact the applicable U.S. EPA Regional Office to find out if this subpart is delegated to a State, local, or tribal agency.

(b) In delegating implementation and enforcement authority of this regulation to a State, local, or tribal agency under subpart E of this part, the authorities contained in paragraph (c) of this section are retained by the Administrator of U.S. EPA and cannot

be transferred to the State, local, or tribal agency.

(c) The authorities that cannot be delegated to State, local, or tribal agencies are as specified in paragraphs (c)(1) through (4) of this section.

(1) Approval of alternatives to the requirements in §§ 63.1500, 63.1505, and 63.1506.

(2) Approval of major alternatives to test methods for under § 63.7(e)(2)(ii) and (f), as defined in § 63.90, and as required in this subpart.

(3) Approval of major alternatives to monitoring under § 63.8(f), as defined in § 63.90, and as required in this subpart.

(4) Approval of major alternatives to recordkeeping and reporting under § 63.10(f), as defined in § 63.90, and as required in this subpart.

Subpart TTT—[Amended]

70. Section 63.1550 is revised to read as follows:

§ 63.1550 Implementation and enforcement.

(a) This subpart be implemented and enforced by the U.S. EPA, or a delegated authority such as the applicable State, local, or tribal agency. If the U.S. EPA Administrator has delegated authority to a State, local, or tribal agency, then that agency, in addition to the U.S. EPA, has the authority to implement and enforce this subpart. Contact the applicable U.S. EPA Regional Office to find out if this subpart is delegated to a State, local, or tribal agency.

(b) In delegating implementation and enforcement authority of this subpart to a State, local, or tribal agency under subpart E of this part, the authorities contained in paragraph (c) of this section are retained by the Administrator of U.S. EPA and cannot be transferred to the State, local, or tribal agency.

(c) The authorities that cannot be delegated to State, local, or tribal agencies are as specified in paragraphs (c)(1) through (4) of this section.

(1) Approval of alternatives to the requirements in §§ 63.1541, 63.1543(a) through (c), (f) and (g), and 63.1544.

(2) Approval of major alternatives to test methods under § 63.7(e)(2)(ii) and (f), as defined in § 63.90, and as required in this subpart.

(3) Approval of major alternatives to monitoring under § 63.8(f), as defined in § 63.90, and as required in this subpart.

(4) Approval of major alternatives to recordkeeping and reporting under § 63.10(f), as defined in § 63.90, and as required in this subpart.

Subpart VVV—[Amended]

71. Section 63.1594 is revised to read as follows:

§ 63.1594 Who enforces this subpart?

(a) This subpart can be implemented and enforced by the U.S. EPA, or a delegated authority such as the applicable State, local, or tribal agency. If the U.S. EPA Administrator has delegated authority to a State, local, or tribal agency, then that agency, in addition to the U.S. EPA, has the authority to implement and enforce this subpart. Contact the applicable U.S. EPA Regional Office to find out if implementation and enforcement of this subpart is delegated to a State, local, or tribal agency.

(b) In delegating implementation and enforcement authority of this subpart to a State, local, or tribal agency under subpart E of this part, the authorities contained in paragraph (c) of this section are retained by the Administrator of U.S. EPA and cannot be transferred to the State, local, or tribal agency.

(c) The authorities that cannot be delegated to State, local, or tribal agencies are as specified in paragraphs (c)(1) through (4) of this section.

(1) Approval of alternatives to the requirements in §§ 63.1580, 63.1583, and § 63.1586.

(2) Approval of major alternatives to test methods under § 63.7(e)(2)(ii) and (f), as defined in § 63.90, and as required in this subpart.

(3) Approval of major alternatives to monitoring under § 63.8(f), as defined in § 63.90, and as required in this subpart.

(4) Approval of major alternatives to recordkeeping and reporting under § 63.10(f), as defined in § 63.90, and as required in this subpart.

Subpart XXX—[Amended]

72. Section 63.1661 is revised to read as follows:

§ 63.1661 Implementation and enforcement.

(a) This subpart can be implemented and enforced by the U.S. EPA, or a delegated authority such as the applicable State, local, or tribal agency. If the U.S. EPA Administrator has delegated authority to a State, local, or tribal agency, then that agency, in addition to the U.S. EPA, has the authority to implement and enforce this subpart. Contact the applicable U.S. EPA Regional Office to find out if this subpart is delegated to a State, local, or tribal agency.

(b) In delegating implementation and enforcement authority of this subpart to a State, local, or tribal agency under subpart E of this part, the authorities contained in paragraph (c) of this section are retained by the Administrator of U.S. EPA and cannot be transferred to the State, local, or tribal agency.

(c) The authorities that cannot be delegated to State, local, or tribal agencies are as specified in paragraphs (c)(1) through (4) of this section.

(1) Approval of alternatives to requirements in §§ 63.1650 and 63.1652 through 63.1654.

(2) Approval of major alternatives to test methods under § 63.7(e)(2)(ii) and (f), as defined in § 63.90, and as required in this subpart.

(3) Approval of major alternatives to monitoring under § 63.8(f), as defined in § 63.90, and as required in this subpart.

(4) Approval of major alternatives to recordkeeping and reporting under § 63.10(f), as defined in § 63.90, and as required in this subpart.

[FR Doc. 02–188 Filed 1–15–02; 8:45 am]

BILLING CODE 6560–50–P

Federal Register

Wednesday,
January 16, 2002

Part II

Environmental Protection Agency

40 CFR Part 63

Clarifications to Existing National Emissions Standards for Hazardous Air Pollutants Delegations' Provisions; Proposed Rule

ENVIRONMENTAL PROTECTION AGENCY

40 CFR Part 63

[FRL–7122–3]

RIN 2060–AJ26

Clarifications to Existing National Emissions Standards for Hazardous Air Pollutants Delegations' Provisions

AGENCY: Environmental Protection Agency (EPA).

ACTION: Proposed amendments.

SUMMARY: As part of the section 112(l), ''Approval of State Programs and Delegation of Federal Authorities'' rulemaking process, EPA (we) agreed to clarify which portions of the existing national emission standards for hazardous air pollutants (NESHAP) contain authorities that can be delegated to State, Local, and Tribal (S/L/T) agencies (September 14, 2000). Today's rulemaking clarifies which parts of the existing NESHAP can be delegated to S/L/T agencies by adding or modifying a section in each NESHAP to describe the authorities that can be delegated to S/L/T agencies and those that must be retained by us. In addition, to further clarify which portions of the NESHAP are delegable, some NESHAP standards sections were slightly reorganized or rephrased to separate delegable from non-delegable authorities. These clarifications do not change any substantive NESHAP requirements for industrial sources. This action does not reopen any of the other requirements in these NESHAP, nor are we accepting comments beyond the scope of this proposal.

DATES: *Comments.* Submit comments on or before March 18, 2002.

Public Hearing. If anyone contacts EPA requesting to speak at a public hearing by February 5, 2002, a public hearing will be held on February 15, 2002.

ADDRESSES: *Comments.* Written comments should be submitted (in duplicate if possible) to: Air and Radiation Docket and Information Center (6102), Attention: Docket No. A–2000–57, Room M–1500, U.S. Environmental Protection Agency, 1200 Pennsylvania Avenue, NW., Washington, DC 20460. The EPA requests that a separate copy also be sent to Ms. Pam Smith, USEPA OAQPS/ITPID (C339–03), Research Triangle Park, North Carolina 27711, telephone number (919) 541–0641, facsimile (919) 541–5509 or e-mail *smith.pam@epa.gov.*

Public Hearing. If a public hearing is held, it will be held at 10 a.m. in the EPA's Office of Administration's Auditorium in Research Triangle Park, North Carolina, or at an alternate site nearby.

Docket. Docket No. A–2000–57 contains supporting information used in developing the standards. The docket is located at the U.S. Environmental Protection Agency, 401 M Street, SW., Washington, DC 20460 in room M–1500, Waterside Mall (ground floor), and may be inspected from 8:30 a.m. to 5:30 p.m., Monday through Friday, excluding legal holidays.

FOR FURTHER INFORMATION CONTACT: Mr. Tom Driscoll, USEPA OAQPS/ITPID (C339–03), Research Triangle Park, North Carolina 27711, telephone (919) 541–5135, or electronic mail at *driscoll.tom@epa.gov.*

SUPPLEMENTARY INFORMATION:

Comments. Comments and data may be submitted by electronic mail (e-mail) to: *a-and-r-docket@epa.gov.* Electronic comments must be submitted as an ASCII file to avoid the use of special characters and encryption problems and will also be accepted on disks in WordPerfect® version 5.1, 6.1, or Corel® 8 file format. All comments and data submitted in electronic form must note the docket number (Docket No. A–2000–57). No confidential business information (CBI) should be submitted by e-mail. Electronic comments may be filed online at many Federal Depository Libraries.

Commenters wishing to submit proprietary information for consideration must clearly distinguish such information from other comments and clearly label it as CBI. Send submissions containing such proprietary information directly to the following address, and not to the public docket, to ensure that proprietary information is not inadvertently placed in the docket: Attention: Docket Center, 4930 Old Page Rd., Building C, Room 530A, Research Triangle Park, NC 27709. The EPA will disclose information identified as CBI only to the extent allowed by the procedures set forth in 40 CFR part 2. If no claim of confidentiality accompanies a submission when it is received by the EPA, the information may be made available to the public without further notice to the commenter.

Public Hearing. Persons interested in presenting oral testimony or inquiring as to whether a hearing is to be held should contact, Ms. Pam Smith, USEPA OAQPS/ITPID (C339–03), Research Triangle Park, North Carolina 27711, telephone number (919) 541–0641 at least 2 days in advance of the public hearing. Persons interested in attending the public hearing must also call Ms. Smith to verify the time, date, and location of the hearing. The public hearing will provide interested parties the opportunity to present data, views, or arguments concerning these proposed emission standards.

Docket. The docket is an organized and complete file of all the information considered by the EPA in the development of this rulemaking. The docket is a dynamic file because material is added throughout the rulemaking process. The docketing system is intended to allow members of the public and industries involved to readily identify and locate documents so that they can effectively participate in the rulemaking process. Along with the proposed and promulgated standards and their preambles, the contents of the docket will serve as the record in the case of judicial review. (See section 307(d)(7)(A) of the Clean Air Act (Act).) The regulatory text and other materials related to this rulemaking are available for review in the docket or copies may be mailed on request from the Air Docket by calling (202) 260–7548. A reasonable fee may be charged for copying docket materials.

Worldwide Web (WWW). In addition to being available in the docket, an electronic copy of these proposed amendments are also available on the WWW through the Technology Transfer Network (TTN). Following signature, a copy of the amendments will be posted on the TTN's policy and guidance page for newly proposed or promulgated rules *http://www.epa.gov/ttn/oarpg.* The TTN provides information and technology exchange in various areas of air pollution control. If more information regarding accessing the TTN is needed, call the TTN HELP line at (919) 541–5384.

Regulated Entities. Entities potentially affected by this rule are S/L/T agencies that voluntarily request delegation of section 112 rules, emissions standards, or requirements. The procedures and criteria for requesting and receiving delegation are in § 63.90 through § 63.97, excluding § 63.96, of 40 CFR 63 subpart E. Facilities that are subject to the individual subparts proposed for modification should not be affected by the proposed changes, which clarify the delegation requirements between EPA and the S/L/T agencies.

Outline. The information presented in this preamble is organized as follows:

I. Background
- A. How do we delegate section 112 standards to you?
- B. When a standard is delegated, can you change any of the requirements?
- C. What is the purpose of this rulemaking?

D. What are the types of changes proposed?
E. Do these clarifications change any substantive requirements to sources?
F. Why do we need a consistent ''Implementation and Enforcement'' section in each NESHAP?
G. Once NESHAP are delegated, does the S/L/T agencies' enforcement authority replace EPA's authority?
H. Does today's rulemaking affect prior delegations of these part 63 NESHAP (maximum achievable control technology (MACT) standards)?
II. Overview of Proposed Changes
A. What categories of changes are we proposing?
B. What clarifications have we made to individual subparts?
III. Administrative Requirements
A. Docket
B. Executive Order 12866—Regulatory Planning and Review
C. Executive Order 13132—Federalism
D. Executive Order 13175—Consultation and Coordination with Indian Tribal Governments
E. Paperwork Reduction Act
F. Regulatory Flexibility Act (RFA), as amended by the Small Business Regulatory Enforcement Fairness Act of 1996 (SBREFA), 5 U.S.C. 601 et seq
G. Unfunded Mandates Reform Act of 1995
H. Executive Order 13045—Protection of Children from Environmental Health Risks and Safety Risks
I. National Technology Transfer and Advancement Act of 1995
J. Executive Order 13211—Energy Effects

I. Background

A. How Do We Delegate Section 112 Standards to You?

The requirements in 40 CFR part 63, subpart E provide a framework for you, the S/L/T agencies, to request and receive delegation of the NESHAP we, EPA, develop under section 112 of the Act. Once you accept delegation, you are responsible for implementing and enforcing the NESHAP for sources in your jurisdiction.

B. When a Standard Is Delegated, Can You Change Any of the Requirements?

In addition to the overall implementation and enforcement authority conferred by the delegation, there are separate parts of each section 112 requirement that we cannot delegate to you. Each individual NESHAP, for example, contains requirements that are considered the standards' and are, therefore, not delegable in terms of you making changes to them. Because the Administrative Procedures Act requires us to approve alternative emission limitations or control requirements through Federal rulemaking, we cannot delegate our rulemaking authority to you. More specifically, any requests by sources for alternative standards must be considered by us and acted upon in a notice and comment rulemaking. Additionally, we cannot delegate authorities that may alter the stringency of the standard, that require Federal oversight for national consistency or that may require Federal rulemaking. Generally, requests by you to revise standards for the source category (or portions thereof) must be addressed through the subpart E rulemaking process for alternative standards. Please note that nothing in the section or this rulemaking usurps your authority to have more stringent state program requirements, such as more stringent emission limitations, apply to sources subject to NESHAP.

However, the authorities in other sections of the rules may be delegable, and approval of alternatives to these requirements may be exercised by you, once you have been delegated the NESHAP through subpart E (straight delegation, § 63.91). Similar authorities may also be in the 40 CFR part 63, subpart A General Provisions, which are incorporated into the majority of the NESHAP, and they contain provisions for the consideration of alternatives to testing, monitoring, reporting, and recordkeeping requirements on a case-by-case basis. Section 63.91(g)(1)(i) of 40 CFR part 63, subpart E further clarifies that ''Category I'' changes, including minor and intermediate changes to testing, monitoring, recordkeeping, and reporting requirements may be considered and approved by delegated S/L/T agencies. There are similar discretionary authorities, to those mentioned directly above, in each NESHAP that may also be delegated to you. Please note, each NESHAP being revised in today's rulemaking will describe those authorities that will be retained by EPA. All other authorities in those NESHAP are delegable to S/L/Ts.

C. What Is the Purpose of This Rulemaking?

As a part of the large regulatory and policy effort to clarify and streamline delegation of part 63 requirements, we agreed to clarify which portions of the existing 40 CFR part 63 NESHAP contain authorities that can be delegated to you (65 FR 55810). In order to achieve this objective, we are proposing slight changes to many of the existing NESHAP. These clarifications will allow you to approve alternatives to the delegable authorities, including category I authorities listed in § 63.91(g)(i), instead of requiring a rulemaking by the EPA to approve the site-specific alternatives. Many of the existing NESHAP lack a clear delegation section which this proposal would remedy.

This is also an opportunity to make the format of the existing NESHAP more consistent with the format used for NESHAP.

D. What Are the Types of Changes Proposed?

The existing NESHAP were promulgated before we developed a consistent rule format, so each one has a slightly different format. Due to these inconsistencies, each NESHAP may need one or more clarifications, listed below, to ease delegation:

- Addition or modification of a section (Implementation and Enforcement) in each NESHAP describing the authorities that can be delegated to you and those that must be retained by us.
- Reorganization of the standards sections in NESHAP to separate compliance assurance measures from actual standards.
- Minor rephrasing of work practices and other standards developed under the authority of section 112(h) of the Act to allow approval of delegable testing, monitoring, reporting, and recordkeeping authorities by S/L/Ts and without rulemaking by us.

E. Do These Clarifications Change Any Substantive Requirements to Sources?

None of these clarifications change any substantive requirements for sources subject to these subparts. These clarifications are intended only to allow you to clearly identify which authorities you may be delegated through 40 CFR part 63, subpart E. As stated earlier, we are not accepting comment on any other provision of these subparts that is outside the scope of this proposal.

F. Why Do We Need a Consistent ''Implementation and Enforcement'' Section in Each NESHAP?

We recognized a need for more consistent formats between the standards, primarily because more than one NESHAP may apply to an individual facility. Consistent NESHAP formats will help you write comprehensive permits for these sources and allow owners and operators to focus on one rather than multiple regulatory formats. Consistent formats will also aid in determining compliance within sources; especially those facilities that are subject to more than one NESHAP. Therefore, we developed a straightforward format which we are now using in NESHAP to address these concerns and enhance the readability of the rules. We recognized that the format should include a section to describe the authorities for which you are allowed to approve alternatives to a NESHAP once

you have received delegation of the standard. This section is termed ''Implementation and Enforcement.''

Many existing NESHAP do not currently contain a section explaining which authorities must be retained by EPA and which can be delegated to S/L/T agencies. In other instances, the NESHAP contain an explanation of these authorities in a section termed ''Delegation of Authority'' which vary widely in form and in content. We are proposing to amend both the existing subparts that do contain and those that do not contain delegation provisions in today's rulemaking. We have incorporated an ''Implementation and enforcement'' section into the NESHAP that do not already contain such a section. As mentioned above, we revised the delegation provisions in subparts that currently contain a ''Delegation of Authority'' section to conform with the ''Implementation and enforcement'' section format.

G. Once NESHAP Are Delegated, Does the S/L/T Agencies' Enforcement Authority Replace EPA's Authority?

Throughout this preamble, we state that once NESHAP are delegated to you, then you will have the authority to implement and enforce those rules for sources in your jurisdiction. However, nothing in this language is intended to suggest that your enforcement agencies have replaced our Federal authority to enforce and implement those rules. We remain partners with you in enforcing the NESHAP.

H. Does Today's Rulemaking Affect Prior Delegations of These Part 63 NESHAP (MACT Standards)?

In many cases, you have already accepted delegation of these NESHAP and, consequently, you are currently implementing and enforcing them. We do not believe that today's rulemaking adversely affects existing delegations of these NESHAP to you. For the most part, today's rulemaking clarifies which of the authorities in each existing NESHAP can, and cannot, be delegated to you, so that you can approve or disapprove alternative requirements.

In all prior delegations, specific authorities in the NESHAP were generally not identified as being delegated. Instead, the NESHAP have been generally delegated in their entirety. For example, when our Regional Offices delegate a NESHAP or MACT standard through straight delegation (see 65 FR 55810, September 14, 2000) to a S/L/T, they reference the whole NESHAP, such as Subpart M—National Perchloroethylene Air Emission Standards for Dry Cleaning Facilities, in any rulemaking or documents. They usually do not reference a particular authority within the NESHAP, such as § 63.324(d), ''[E]ach owner or operator of a dry cleaning facility shall keep receipts of perchloroethylene purchases * * *'' in any delegation. Therefore, today's rulemaking will not affect your existing part 63 NESHAP delegation.

Potential issues may occur where you have already acted on the authorities you believed you had been delegated. For example, in Subpart HH, the delegation of authority paragraph in § 63.776 does not withhold the delegation of any of the standards' sections. Therefore, you may have exercised the authority to approve alternative emissions controls or limitations in this example. As mentioned above, you cannot approve alternatives to NESHAP's emissions controls or limitations because they must be established through national rulemaking. Only we can approve alternatives to emissions controls or limitations through national rulemaking.

If you have inadvertently approved alternatives to NESHAP's emissions controls or limitations for a specific source, then the appropriate EPA Regional Office must be notified of this approval. Our Regional Office will then work with you and our Office of Air Quality Planning and Standards, Office of Enforcement and Compliance Assurance, and Office of General Counsel to reevaluate the alternative through § 63.6 or the provisions in 40 CFR part 63, subpart E. If you have any questions regarding inadvertent approvals, please contact your appropriate EPA Regional Office.

II. Overview of Proposed Changes

A. What Categories of Changes Are We Proposing?

1. Adding an ''Implementation and Enforcement'' Section

The first category of changes involves adding a section that describes non-delegable authorities or changing current delegation sections to conform to a consistent format. The new ''Implementation and enforcement'' sections cite the rule sections or requirements for which you may not approve alternatives (i.e., non-delegable authorities). The authority to make changes to those sections or requirements is retained by us and includes the authority to approve any alternatives to emissions standards; including their applicability requirements. Conversely, any authority not expressly reserved for us, in these paragraphs, can be delegated to you so that you can exercise these authorities.

As part of the recent subpart E rulemaking (65 FR 55810), we have clarified which of the specific General Provisions authorities regarding alternative requirements could not be delegated to you because they would be nationally significant or would alter the stringency of an underlying standard and, thus, could not be delegated to you. We divided the General Provisions discretionary authorities into two groups, based upon the relative significance of each type of decision. Category I contains those authorities which can be delegated. We believe that the EPA Regional Office retains the ability to request review of these decisions, although we expect that this authority will be exercised infrequently. Category II contains those authorities which cannot be delegated.

In general, we believe that where possible, authority to make decisions which are not likely to be nationally significant or to alter the stringency of the underlying standard, such as minor changes to test methods, should be delegated to those with the most expertise in dealing with these kinds of decisions, the S/L/Ts; resulting in minimal involvement by us. Section 63.91(g)(1)(i) of subpart E lists the authorities in category I, i.e., those authorities which may be delegated.

Section 63.91(g)(2)(ii) of subpart E lists the authorities which may not be delegated in Category II, which includes those decisions which generally may result in a change to the stringency of the underlying standard, which is likely to be nationally significant, or which may require a **Federal Register** notice when approving an alternative. These authorities, as mentioned previously, must always be retained by us, and cannot be delegated to you. Consistent with this approach, we must retain the authority to approve major alternatives to test methods, monitoring, recordkeeping, and reporting.

With this proposal, we are not requesting comment on the appropriateness of our decisions regarding the classification of General Provisions authorities into Category I or II. That decision was recently finalized (65 FR 55810) based on public comment and internal discussion. However, the changes proposed today in the individual subparts reference the subpart E classifications to ensure that they conform with this similar framework. We are requesting comment on whether the individual provisions in the existing subparts are appropriately included in this framework or whether

there are subpart-specific reasons for an alternative scheme.

2. Reorganizing Sections To Separate Compliance Assurance Measures From Actual Standards

The NESHAP contain two major types of requirements: standards and delegable requirements. The standards are the essential requirements that implement EPA's authority under the Act to establish hazardous air pollutant (HAP) emission standards. These standards may be emission limitations (emission limits, operating limits, opacity limits, and visible emission limits) and/or work practice standards (design, equipment, work practices, and operational standards). The authority to approve alternatives to any of the promulgated standards must be retained by us. Requirements that are essential to ensuring that the standards are achieved as EPA intended, such as applicability requirements and compliance dates, are also retained.

The delegable requirements are also essential, but they offer some flexibility in their implementation. For example, you can approve minor and intermediate changes to testing, monitoring, reporting, and recordkeeping provisions, as long as they are at least as stringent as EPA requirements. For example, a source may request to inspect air pollution control equipment on a different schedule than that contained in the rule for source-specific reasons. An alternative inspection scheme may be accepted if the proposed schedule meets the intent of the original requirements to ensure the equipment is inspected regularly and repaired in a timely fashion.

In another instance, a source may wish to submit reports to coincide with the schedule of other required reports. A change in the schedule for submission of reports would be considered a minor change to reporting, and the authority to approve these types of minor changes is one which can be delegated to the S/L/T agencies.

In other cases, the S/L/T agency is given authority to make changes in the implementation of a requirement, but not to change the actual requirement itself. For example, some NESHAP require operation and maintenance plans. Here the S/L/T agency is given the authority to approve some changes in the content of the plan, but does not have the authority to waive the requirement that the plan must be created and followed. Additionally, some newly named operation and maintenance sections contain provisions which are similar to work practices, in that they can potentially affect emissions, such as the requirement to operate and maintain the source's equipment in keeping with good air pollution control practices, or the requirement to correct malfunctions as soon as practicable. You may not approve alternatives that are less stringent than the criteria outlined in the subpart. However, you may require more stringent provisions, such as not permitting excess emissions during malfunctions at all. Where an operations and maintenance plan is required, it usually allows the source considerable latitude in designing the plan, so long as the plan meets certain criteria. You may approve alternatives to the plan that are more stringent than the criteria listed, but you may not approve elimination of major criteria, such as specifying the process and control system monitoring equipment.

As a second example, most NESHAP include requirements to monitor certain specified control equipment operating parameters and to set enforceable operating limits for these same parameters based on data from the performance test. In this case, the S/L/T may be delegated the authority to approve changes to the ranges for the operating limits based on new performance test data and/or other relevant information submitted by the source. However, we retain the authority to approve modifications to requirements affecting which parameters are monitored (e.g., EPA would approve appropriate parameters to monitor for a control device not addressed in a NESHAP).

A more detailed discussion and additional examples of changes that may be made to the delegable requirements are presented in the preambles to the proposed and final subpart E rule (64 FR 1880) and (65 FR 55822).

In most NESHAP, the non-delegable authorities and the delegable authorities are separated into different sections of the rule. However, in a few NESHAP, these authorities are mixed within a single section; in the standard section in some NESHAP. In this case, we identified and separated out (where possible) the paragraphs that contain requirements for which you may not approve alternatives in the ''Implementation and enforcement'' section.

In other situations, the delegable and non-delegable authorities are not clearly separated into different sections or into different paragraphs within a standards section. In these cases, we have restructured the standards sections to separate the delegable and non-delegable authorities. This restructuring was accomplished by moving the delegable authorities to more appropriate sections of the rule, such as ''Monitoring requirements'' or ''Recordkeeping requirements'' sections. As a result, the ''Implementation and enforcement'' section more clearly shows which authorities you may not be delegated by simply listing the sections containing those authorities.

3. Proposing Minor Work Practices' Amendments To Allow Approval of Alternatives Without EPA Rulemaking

In some MACTs, provisions for which you could or should have the authority to approve alternatives are written in a way that precludes you from approving alternatives to these practices. Authority to approve alternatives to work practice standards or any other emission limitation established under section 112(d) or (h) of the Act cannot be delegated to you. However, some work practice requirements could be written more broadly to allow alternative practices to be implemented or these work practice requirements could be written to expressly state that you may approve alternative practices.

We have rewritten these work practice standards, where possible, to specifically state that you have the authority to approve equivalent or more stringent alternative compliance assurance measures. The sections containing these requirements are not listed as authorities retained by us in the implementation and enforcement section. These kinds of changes are necessary only for a small number of subparts.

An example of the need for broader flexibility in these requirements is presented in subpart GG, the Aerospace NESHAP. This subpart includes a requirement that solvent-laden rags be stored in closed containers with tight-fitting lids. This requirement prohibits the use of other methods for storing solvent-laden rags to prevent HAP emissions, such as storing them in a room that is vented to a control device. This practice may be as effective as the use of a closed container. However, as subpart GG is currently written, sources must apply to our Office of Air Quality Planning and Standards to have such an alternative work practice approved as equivalent. In turn, we must approve this alternative work practice through rulemaking. In this and other instances where this rulemaking procedure does not seem necessary, we have rephrased the work practice standard to specifically state that S/L/T agencies may determine whether alternatives are equivalent.

B. What Clarifications Have We Made to Individual Subparts?

1. Subpart F, National Emission Standards for Organic Hazardous Air Pollutants From the Synthetic Organic Chemical Manufacturing Industry

Subpart F contains the primary MACT standards of the Hazardous Organic NESHAP (HON). This regulation is one subpart in a group of subparts that make up the HON regulation, where each subpart regulates a group of emission points. These unit-specific subparts were written to collectively regulate the production of 300 defined organic chemicals, but have subsequently been used as a reference in other MACT regulations for some requirements. Therefore, for cross-referencing and delegation purposes, it is important for each of these subparts to have adequate separation of delegable versus non-delegable authorities and to have delegation provisions that are specific to each subpart.

In some instances, this regulation is not clear about separating delegable authorities. For example, § 63.104 contains monitoring requirements associated with leak detection and repair. However, these types of requirements actually constitute an integral part of the standard in leak detection and repair programs. The leak detection and repair requirements of subpart F fall into this category, so we are not proposing to delegate these authorities.

To clarify which authorities are delegated, we have replaced the existing delegation paragraph with ''Implementation and enforcement'' section language. These delegation provisions show that delegation of authority to approve alternatives is not given to S/L/T agencies for the requirements in §§ 63.100, 63.102, and 63.104, which contain applicability requirements, general standards, and standards for heat exchangers. In addition, this rule requires that affected sources meet specific requirements that are contained in other subparts. We have clarified that delegation of those requirements will occur according to the delegation provisions of the referenced subparts.

2. Subpart G, HON Standards for Process Vents, Storage Vessels, Transfer Operations, and Wastewater

Subpart G contains the HON MACT standards for process vents, storage vessels, transfer operations, and wastewater. As described above, it is important for cross-referencing and delegation purposes for each of the HON subparts to have adequate separation of compliance assurance measures from the standards and to have a delegation paragraph specific to the requirements of each subpart.

In some instances, this regulation does not adequately separate delegable versus non-delegable authorities. For example, §§ 63.133–63.139 contain inspection requirements and schedules for problem detection and repair. However, these types of requirements actually constitute an integral part of the standard in leak detection and repair programs. The leak detection and repair requirements of subpart G fall into this category, so we are not proposing to delegate these authorities.

This subpart does not currently contain its own delegation provisions. However, § 63.121 describes procedures that should be followed to request the use of alternative means of emissions limitation for storage vessels. Also, the delegation provisions in subpart F address delegation of some subpart G requirements. To clarify which authorities are delegated, we propose to add ''Implementation and enforcement'' section for delegation provisions to this subpart in a new section, § 63.153. This section, as proposed, indicates that delegation of authority to approve alternatives cannot be given to S/L/T agencies for the requirements in §§ 63.112–63.113, 63.119, 63.126, 63.132–63.140, and 63.148–63.149, which contain the emission standards; for the requirements in § 63.110 which contains the applicability requirements for this rule; and § 63.150(i)(1)–(4), which contains requirements to request permission to take credit for use of a control technology that is different in use or design from the reference control technology. To retain the intent of the original language of § 63.121, the new delegation paragraph cross-references the section identifying the procedures to follow in requesting an alternative means of emission limitation for storage vessels. In addition, this rule requires that affected sources meet specific requirements that are contained in other subparts. We have clarified that delegation of those requirements will occur according to the delegation provisions of the referenced subparts. Where subpart G requires that affected sources meet specific requirements that are contained in other subparts, but makes certain changes to those provisions, we have clarified that those provisions should be changed accordingly and then delegated according to the delegation provisions of the referenced subpart.

3. Subpart H, HON for Organic Hazardous Air Pollutants for Equipment Leaks

Subpart H is the MACT standard for equipment leaks at facilities regulated by the HON. As described above, it is important for cross-referencing and delegation purposes for each of the HON subparts to have adequate separation of compliance assurance measures from the standards and to have a delegation paragraph specific to the requirements of each subpart.

In some instances, this subpart does not adequately separate delegable versus non-delegable authorities. Several standards sections contain monitoring, inspection, recordkeeping, and reporting requirements associated with leak detection and repair. However, we believe that these types of requirements actually constitute an integral part of the standard in leak detection and repair programs. The leak detection and repair requirements of subpart H fall into that category, so we are not proposing to delegate these authorities.

This subpart does not have its own delegation provisions. To clarify which authorities are delegated, we have added ''Implementation and enforcement'' section in a new section, § 63.183. The section, as proposed, indicates that delegation of authority to approve alternatives cannot be given to S/L/T agencies for the requirements in §§ 63.160, 63.162–63.176, and 63.178–63.179, which contain the applicability provisions, emissions standards, standards for quality improvement programs, and provisions for alternative emission limitations. The reader is also instructed to follow the requirements of § 63.177 to request an alternative means of emission limitation for batch processes and enclosed-vented process units.

This subpart also requires affected sources to meet specific requirements that are contained in other subparts. We have clarified in the implementation and enforcement language that delegation of those requirements will occur according to the delegation provisions of the referenced subparts. Where subpart H requires that affected sources meet specific requirements that are contained in other subparts, but makes certain changes to those provisions, we have clarified that those provisions should be modified accordingly and then delegated according to the delegation provisions of the referenced subpart.

4. Subpart I, HON for Certain Processes Subject to the Negotiated Regulation for Equipment Leaks

Subpart I is the negotiated MACT standard for equipment leaks at facilities regulated by the HON. As described above, it is important for cross-referencing and delegation purposes for each of the HON subparts to have adequate separation of compliance assurance measures from the standards and to have a delegation paragraph specific to the requirements of each subpart.

In some instances, this subpart does not adequately separate compliance assurance measures from the standards. Section 63.192, ''Standard,'' contains performance test, recordkeeping, reporting, and other provisions that are considered delegable. Since the paragraphs containing these provisions are reasonably separable from the other standards in the section, we have indicated that the requirements in paragraphs § 63.192(c)–(d), (f)–(g), and (k)–(m) are not part of the standard and, thus, are delegable. Again, we are not changing the substance of these requirements and are, thus, accepting comments only on the delegation of them.

To clarify which authorities are delegated, we have replaced the existing delegation provisions' language with ''Implementation and enforcement'' section. The section, as proposed, indicates that delegation of authority to approve alternatives cannot be given to S/L/T agencies for the requirements in §§ 63.190 and 63.192(a)–(b), (e), (h)–(j), which contain the applicability provisions and emissions standards for this subpart. In addition, this subpart requires that affected sources meet specific requirements that are contained in other subparts. In the implementation and enforcement language, we have clarified that delegation of those requirements will occur according to the delegation provisions of the referenced subparts.

5. Subpart L, National Emission Standards for Coke Oven Batteries

Subpart L is the MACT standard for coke oven batteries. To clarify which authorities are delegated, we have replaced the existing delegation provisions' language with ''Implementation and enforcement'' section. In the delegation section, we retain the authorities in §§ 63.300 and 63.302–63.308, which contain the applicability provisions and emissions standards for by-product and nonrecovery coke oven batteries, compliance date extensions, coke oven doors equipped with sheds, work practice standards, bypass/bleeder stacks, and collecting mains.

The original delegation provisions contained language addressing failure of delegated agencies to carry out required inspections and tests. We retained this language in the revised delegation provisions, but added language to it and to § 63.609, ''Performance tests and procedures,'' explaining that the Administrator may also withdraw delegation of authority pursuant to the provisions of § 63.96.

6. Subpart M, National Perchloroethylene Air Emission Standards for Dry Cleaning Facilities

Subpart M is the MACT standard for perchloroethylene dry cleaning operations. This subpart does not separate delegable authorities from non-delegable ones in some instances. Section 63.322, ''Standards,'' contains inspection and repair requirements for equipment leaks in paragraphs (k)–(n), which are considered delegable monitoring authorities for this subpart. Since these paragraphs are reasonably separable from the other standards in the section, we have indicated that the requirements in paragraphs (k)–(n) are not considered part of the standard and, thus, are delegable authorities.

This subpart also does not currently contain a delegation section. To clarify which authorities are delegated, we have added the ''Implementation and enforcement'' section for the delegation provisions in a new section, § 63.326. This section, as proposed, indicates that delegation of authority to approve alternatives cannot be given to S/L/T agencies for the requirements in §§ 63.322(a)–(j), which contain the emissions and work practice standards for this rule. This section also shows that delegation of authority to approve alternatives is not given to S/L/T agencies for the applicability provisions in § 63.320. Finally, to retain the intent of the original language of § 63.325, which identifies procedures to demonstrate equivalence of an alternative control technology, the delegation provisions cross-reference the section that identifies procedures to follow in requesting use of an alternative control technology.

7. Subpart N, National Emission Standards for Chromium Emissions from Hard and Decorative Chromium Electroplating and Chromium Anodizing Tanks

Subpart N is the MACT standard for chromium electroplating. This subpart does not separate delegable requirements from non-delegable standards in one instance. Section § 63.342(f) contains operation and maintenance requirements, which are inappropriately termed ''work practice standards.'' We have replaced the term ''work practice standards'' with ''operation and maintenance practices'' to clarify that these authorities are delegable requirements rather than actual standards and made similar conforming changes elsewhere in the rule, as needed. Since these paragraphs are reasonably separable from the other standards in the section, we have indicated that the authorities in § 63.342(f) are not considered part of the standard and, thus, are delegable.

This rule does not currently contain delegation provisions. To clarify which authorities are delegated, we have added ''Implementation and enforcement'' section for the delegation provisions in a new section, § 63.348. This section, as proposed, indicates that delegation of authority to approve alternatives cannot be given to S/L/T agencies for the authorities in §§ 63.340 and 63.342(a)–(e) and (g), which contain the applicability provisions and the emission standards for hard chromium electroplating tanks, decorative chromium electroplating tanks using a chromic acid bath and chromium anodizing tanks, and decorative chromium electroplating tanks using a trivalent chromium bath.

8. Subpart O, Ethylene Oxide Emissions Standards for Sterilization Facilities

Subpart O is the MACT standard for the ethylene oxide sterilization industry. This subpart does not currently contain delegation provisions. To clarify which authorities are delegated, we have added ''Implementation and enforcement'' section for the delegation provisions in a new section, § 63.368. This section, as proposed, indicates that delegation of authority to approve alternatives cannot be given to S/L/T agencies for the requirements in §§ 63.360 and 63.362, which contain the applicability provisions and emission standards for this rule.

9. Subpart Q, National Emission Standards for Hazardous Air Pollutants for Industrial Process Cooling Towers

Subpart Q is the MACT standard for industrial cooling towers. This subpart does not currently contain delegation provisions. To clarify which authorities are delegable, we have added ''Implementation and enforcement'' section for the delegation provisions in a new section, § 63.407. This section, as proposed, indicates that delegation of authority to approve alternatives cannot

be given to S/L/T agencies for the authorities in §§ 63.400 and 63.402–63.403, which contain the applicability provisions, the emissions standard, and the compliance dates for this subpart.

10. Subpart R, National Emission Standards for Gasoline Distribution Facilities (Bulk Gasoline Terminals and Pipeline Breakout Stations)

Subpart R is the MACT standard for gasoline distribution. To clarify which authorities are delegated, we have replaced the existing delegation provisions' language with ''Implementation and enforcement'' section. This section, as proposed, indicates that delegation of authority to approve alternatives cannot be given to S/L/T agencies for the requirements in §§ 63.420 and 63.422–63.424, which contain the applicability provisions and emissions standards for loading racks, storage vessels, and equipment leaks.

To retain the intent of the original delegation provisions, the revised delegation section also retains delegation of the authority to approve major alternatives to the monitoring specified in § 63.427(a)(1)–(4) per § 63.427(a)(5), which contains provisions for monitoring an alternative operating parameter. To retain the intent of the original language of § 63.426, the revised delegation paragraph cross-references that section for procedures to follow in requesting an alternative means of emission limitation for storage vessels.

11. Subpart S, National Emission Standards for Hazardous Air Pollutants from the Pulp and Paper Industry

Subpart S is the MACT standard for pulp and paper production. This subpart does not separate delegable requirements from non-delegable standards in some instances. Section § 63.450, ''Standards for enclosures and closed-vent systems,'' contains monitoring and recording requirements for closed vent system bypass lines. We have removed the monitoring and recording authorities from § 63.450(d)(1) and placed them in § 63.454(e), ''Recordkeeping requirements.'' However, we added a reference in § 63.450(d)(1) that the provisions of § 63.454(e) must be followed.

This subpart contains delegation provisions that are not consistent with ''Implementation and enforcement'' section. To clarify which authorities are delegated, we have replaced the existing delegation provisions' language with ''Implementation and enforcement'' section. This section, as proposed, indicates that delegation of authority to approve alternatives cannot be given to S/L/T agencies for the requirements in §§ 63.440, 63.443–63.437 and 63.450, which contain the applicability provisions and the emissions standards for pulping systems, bleaching systems, kraft pulping process condensates, clean condensate alternatives, and enclosures and closed-vent systems. This subpart also requires that provisions of another subpart be followed. In the implementation and enforcement language, we have clarified that delegation of those requirements will occur according to the delegation provisions of the subpart that is referenced.

12. Subpart T, National Emission Standards for Halogenated Solvent Cleaning

Subpart T is the MACT standard for halogenated solvent cleaning. We have restructured the work practices in § 63.462 to give S/L/T agencies greater flexibility to approve alternatives that will still meet the intent of the standard. To create this flexibility we have added paragraph (e) to § 63.462. In addition, § 63.463, ''Batch vapor and in-line cleaning machine standards,'' contains recordkeeping provisions in § 63.463(e)(2)(ix)(B). We have restructured this section to refer to § 63.467 ''Recordkeeping requirements,'' for these provisions in § 63.467(a)(6).

This subpart also does not currently contain delegation provisions. To clarify which authorities are delegated, we added ''Implementation and enforcement'' section in a new section, 63.470. This section, as proposed, indicates that delegation of authority to approve alternatives cannot be given to S/L/T agencies for the requirements in §§ 63.460, 63.462(a)–(d), and 63.463–63.464, which contain the applicability provisions and the emissions standards for batch cold cleaning machines and batch vapor and in-line cleaning machines.

Section 63.469 describes procedures that must be followed to request the use of alternative equipment or an alternative work practice. Section 63.460(f) retains delegation of this section to the Administrator and also retains § 63.463(d)(9), which requires the owner or operator to maintain each solvent cleaning machine as recommended by the manufacturer or to use alternative practices that have been approved by the Administrator. The delegation provisions added in § 63.470 cross-reference § 63.469 for procedures to follow in requesting an alternative means of emission limitation. We have removed § 63.460(f), since the requirements of that paragraph are now listed in § 63.470 as authorities that are not delegated.

13. Subpart U, National Emission Standards for Hazardous Air Pollutant Emissions: Group I Polymers and Resins

Subpart U is the MACT standard for group I polymers and resins. This subpart does not separate compliance assurance measures from the standards in some instances. Several standards sections contain provisions that are considered delegable requirements. Since the paragraphs containing these delegable provisions are reasonably separable from the standards in the section, we have indicated in the delegation provisions that the requirements in paragraphs §§ 63.483(d), 63.485(l), (t) and (v), 63.488(b)(5)(i)–(iii), 63.500(a)(4)–(5), (c)–(e), and 63.502(g)–(i), (j), and (n) are not considered part of the standard and, thus, are authorities that may be delegated to S/L/T agencies.

This subpart also does not currently contain delegation provisions. To clarify which authorities are delegable, we have added ''Implementation and enforcement'' section for the delegation provisions in a new section, § 63.507. This section, as proposed, indicates that delegation of authority to approve alternatives cannot be given to S/L/T agencies for the requirements in §§ 63.480–63.481, 63.483(a)–(c), 63.484, 63.485(a)–(k), (m)–(s), (u), 63.486–63.487, 63.488(a), (b)(1)–(4), (5)(iv)–(v), (6)–(7), (c)–(i), 63.493–63.494, 63.500(a)(1)–(3), (b), 63.501, and 63.502(a)–(f), (i), (k)–(m), and 63.503, which contain applicability provisions, compliance dates, the emission standards, and the emissions averaging provisions for this subpart. In addition, this subpart requires that affected sources meet specific requirements that are contained in other subparts. In the implementation and enforcement language, we have clarified that delegation of those requirements will occur according to the delegation provisions of the referenced subparts. Where subpart U requires that affected sources meet specific requirements that are contained in other subparts, but makes certain changes to those provisions, we have clarified that those provisions should be changed accordingly and then delegated according to the delegation provisions of the referenced subpart. For example, subpart U references subpart G, §§ 63.113–63.116 but slightly changes these requirements. We clarify in this rulemaking that although subpart U changes these specific subpart G requirements for the purposes of subpart U, the delegation of these referenced

requirements follow the original delegation of subpart G.

14. Subpart W, National Emission Standards for Hazardous Air Pollutants for Epoxy Resins Production and Non-Nylon Polyamides Production

Subpart W is the group II polymers and resins MACT for epoxy resins and non-nylon polyamide production. This subpart does not currently contain delegation provisions. To clarify which authorities are delegable, we have added ''Implementation and enforcement'' section for the delegation provisions in a new section, § 63.529. This section, as proposed, indicates that delegation of authority to approve alternatives cannot be given to S/L/T agencies for the requirements in §§ 63.520, 63.523 and 63.524, which contain the applicability provisions and the emissions standards for basic liquid and wet strength resins. In addition, this subpart requires provisions of another subpart, subpart H, to be followed. We have clarified that delegation of the requirements from the other subpart, subpart H, will occur according to the delegation provisions of the subpart that is referenced.

15. Subpart X, National Emissions Standards for Hazardous Air Pollutants From Secondary Lead Smelting

Subpart X is the MACT standard for secondary lead smelting. We have restructured the work practices in § 63.545 to give S/L/T agencies greater flexibility in approving alternatives that still meet the intent of the standard by adding a paragraph to explain that either the Administrator or delegated S/L/T authorities may approve alternatives to the fugitive dust reduction practices in § 63.545(c).

This subpart also does not currently contain delegation provisions. To clarify which authorities are delegated, we have added the ''Implementation and enforcement'' section for the delegation provisions in a new section, § 63.551. This section, as proposed, indicates that delegation of authority to approve alternatives cannot be given to S/L/T agencies for the requirements in §§ 63.541, and 63.543–63.545(a)–(e), which contain the applicability provisions and emissions standards for process sources, process fugitive sources, and fugitive dust sources.

16. Subpart Y, National Emission Standards for Marine Tank Vessel Loading Operations

Subpart Y is the MACT standard for marine tank vessel loading operations. This subpart does not separate delegable requirements from non-delegable standards in some instances. Section 63.562, ''Standards,'' contains requirements for an operation and maintenance plan in § 63.562(e) and its associated recordkeeping and reporting provisions are contained in § 63.562(d)(3), which are delegable authorities. We have removed the reporting and recordkeeping requirements from § 63.562 by deleting paragraph § 63.562(d)(3) and added those provisions to § 63.567, ''Reporting and recordkeeping,'' by adding paragraph § 63.567(l). Since paragraph (e) is reasonably separable from the other standards in § 63.562, we have indicated in the implementation and enforcement provisions that the requirements in this paragraph are not considered part of the standard and, thus, are delegable.

This subpart also does not currently contain delegation provisions. To clarify which authorities are delegated, we have added the ''Implementation and enforcement'' section for the delegation provisions in a new section, § 63.568. This section, as proposed, indicates that delegation of authority to approve alternatives cannot be given to S/L/T agencies for the requirements in §§ 63.560 and 63.562(a)–(d), which contain the applicability provisions and emission standards for this rule.

17. Subpart AA, National Emission Standards for Hazardous Air Pollutants From Phosphoric Acid Manufacturing Plants

Subpart AA is the MACT standard for the phosphoric acid manufacturing industry. This subpart does not currently contain delegation provisions. To clarify which authorities are delegated, we have added the ''Implementation and enforcement'' section for the delegation provisions in a new section, § 63.611. This section, as proposed, indicates that delegation of authority to approve alternatives cannot be given to S/L/T agencies for the requirements in §§ 63.600, 63.602–63.604, and 63.609–63.610, which are the applicability provisions, the emission standards for existing and new sources and the operating requirements for wet scrubbing emission control systems, the compliance dates, and other requirements for this subpart.

18. Subpart BB, National Emission Standards for Hazardous Air Pollutants from Phosphate Fertilizers Production Plants

Subpart BB is the MACT standard for phosphate fertilizers production. This subpart does not currently contain delegation provisions. To clarify which authorities are delegated, we have added the ''Implementation and enforcement'' section for the delegation provisions in a new section, § 63.632. This section, as proposed, indicates that delegation of authority to approve alternatives cannot be given to S/L/T agencies for the requirements in §§ 63.620, 63.622–63.624, and 63.629–63.631, which contain the applicability provisions, the emissions standards for existing and new sources, the operating requirements for wet scrubbing emission control systems, and the compliance dates and other requirements for this subpart.

19. Subpart CC, National Emission Standards for Hazardous Air Pollutants from Petroleum Refineries

Subpart CC is the MACT standard for petroleum refineries. This subpart does not separate delegable requirements from non-delegable standards in some instances. Section 63.642, ''General standards,'' contains recordkeeping, reporting, and other delegable requirements in paragraphs (a)–(f) and (m). Since these paragraphs are reasonably separable from the standards in the section, we have indicated that the requirements in these paragraphs are not considered part of the standard and, thus, are delegable.

This subpart also does not currently contain delegation provisions. To clarify which authorities are delegated, we have added the ''Implementation and enforcement'' section for the delegation provisions in a new section, § 63.655. This section, as proposed, indicates that delegation of authority to approve alternatives cannot be given to S/L/Ts for the requirements in §§ 63.640, 63.642(a),

(g)–(l), 63.643, 63.646–63.648, and 63.649–63.652, which contain applicability provisions, standards for applicability determinations, process vents, storage vessels, wastewater, equipment leaks, connectors in gas/vapor and light liquid service, gasoline loading racks, marine vessel tank loading operations, and emissions averaging provisions. In addition, this subpart requires that affected sources meet specific requirements that are contained in other subparts. In the implementation and enforcement language, we have clarified that delegation of those requirements will occur according to the delegation provisions of the referenced subparts. Where subpart CC requires that affected sources meet specific requirements that are contained in other subparts, but makes certain changes to those provisions, we have clarified that those provisions should be changed accordingly and then delegated according to the delegation provisions

of the referenced subpart. For example, subpart CC references subpart H, § 63.1182(c) but slightly changes these requirements. We clarify in this rulemaking that although subpart CC changes these specific subpart H requirements for the purposes of subpart CC, the delegation of these referenced requirements follow the original delegation of subpart H.

20. Subpart DD, National Emission Standards for Hazardous Air Pollutants From Off-Site Waste and Recovery Operations

Subpart DD is the MACT standard for offsite waste and recovery operations. This regulation is the primary subpart in a group of subparts that make up the off-site waste and recovery operations regulation. The subsequent subparts each regulate a group of emission points, which were written so that new rules for other MACT source categories can reference these subparts for some requirements. Since these subparts reference subpart DD for some authorities, it is important that subpart DD separates delegable requirements from the non-delegable standards and contains delegation provisions that delegate the appropriate authorities.

Subpart DD does not separate delegable requirements from non-delegable authorities in some instances. Section 63.684, ''Standards for off-site material treatment,'' contains monitoring requirements, and § 63.693, ''Standards for closed-vent systems and control devices,'' contains monitoring and inspection requirements, which are delegable authorities. We have rephrased the language of § 63.684(e)(1) to remove the monitoring and reporting requirements from that section. Those requirements were added to § 63.695, ''Inspection and monitoring requirements'' in § 63.695(e), with an introductory paragraph to match the format of the section in § 63.695(a)(4). The continuous monitoring requirements and visual inspection requirements in § 63.693(b)(4)(i) and § 63.693(c)(2)(ii) were also removed and placed in § 63.695(c)(1)(ii)(C) and (D).

To clarify which authorities can be delegated, we have replaced the existing delegation provisions' language with the ''Implementation and enforcement'' section. This section, as proposed, indicates that delegation of authority to approve alternatives cannot be given to S/L/T agencies for the requirements in §§ 63.680, 63.684–63.691, and 63.693, which contain applicability provisions and the standards for off-site material treatment, tanks, oil-water and organic-water separators, surface impoundments, containers, transfer systems, process vents, equipment leaks, closed-vent systems, and control devices. In addition, this rule requires that affected sources meet specific requirements that are contained in other subparts. In the implementation and enforcement language, we have clarified that delegation of those requirements will occur according to the delegation provisions of the subpart that is referenced.

21. Subpart EE, National Emission Standards for Magnetic Tape Manufacturing Operations

Subpart EE is the MACT standard for the magnetic tape manufacturing industry. To clarify which authorities are delegated, we have replaced the existing delegation paragraph with the ''Implementation and enforcement'' section. This section, as proposed, indicates that delegation of authority to approve alternatives cannot be given to S/L/T agencies for the requirements in § 63.701 and § 63.703, which contain the applicability provisions and the emission standards for this rule.

22. Subpart GG, National Emission Standards for Aerospace Manufacturing and Rework Facilities

Subpart GG is the MACT standard for aerospace manufacturing and rework facilities. We have restructured the work practices in § 63.744 to give S/L/T agencies greater flexibility in approving alternatives that still meet the intent of the standard by adding a paragraph to explain that either the Administrator or delegated State, local, or tribal authorities may approve alternatives to the cleaning operations measures in § 63.744(a).

In addition, this subpart does not contain delegation provisions. To clarify which authorities are delegated, we have added the ''Implementation and enforcement'' section for the delegation provisions in a new section, § 63.759. This section, as proposed, indicates that delegation of authority to approve alternatives cannot be given to S/L/T agencies for the requirements in §§ 63.741, 63.743, 63.744(a)(1)–(3), 63.744(b)–(e), 63.745–63.748, and 63.749(a), which contain the applicability provisions, cleaning, primer and top-coat application, depainting, chemical milling maskant application, and waste handling and storage standards, and the compliance dates for this rule.

23. Subpart HH, National Emission Standards for Hazardous Air Pollutants From Oil and Natural Gas Production Facilities

Subpart HH is the MACT standard for oil and natural gas production facilities. This subpart does not separate delegable from non-delegable authorities in some instances. A standards section, § 63.771, ''Control equipment requirements,'' contains inspection and monitoring requirements, which are considered delegable requirements. We have removed the language for inspection and monitoring requirements from § 63.771 and added it to § 63.773, ''Inspection and monitoring requirements,'' in § 63.773(c)(2)(iv).

To clarify which authorities are delegated, we have replaced the existing delegation provisions' language with the ''Implementation and enforcement'' section. This section, as proposed, indicates that delegation of authority to approve alternatives cannot be given to S/L/T agencies for the requirements in §§ 63.760, 63.765–63.766, 63.769, and 63.771, which contain the applicability provisions and the emission standards for glycol dehydration unit process vents, storage vessels, equipment leaks, and control equipment requirements. We did not reserve § 63.764, ''General Standards,'' which does not contain actual standards, but provides a guide to the applicable requirements in other sections of the subpart.

This subpart also contains a section, § 63.777, which describes procedures that should be followed to obtain approval of an alternative means of emission limitation. To retain the intent of the original language of § 63.777, the delegation provisions also reserve that section for procedures to follow in requesting an alternative means of emission limitation.

24. Subpart II, National Emission Standards for Shipbuilding and Ship Repair (Surface Coating)

Subpart II is the MACT standard for shipbuilding and ship repair. This subpart currently does not have a delegation section. To clarify which authorities are delegated, we have added the ''Implementation and enforcement'' section for the delegation provisions in a new section, § 63.789. This section, as proposed, indicates that delegation of authority to approve alternatives cannot be given to S/L/T agencies for the requirements in §§ 63.780–63.781 and 63.783–63.784, which contain the applicability provisions, emission standards, and compliance dates for this rule.

25. Subpart JJ, National Emission Standards for Wood Furniture Manufacturing Operations

Subpart JJ is the MACT standard for wood furniture manufacturing. This subpart does not separate delegable requirements from the standards in some instances. Section 63.803, ''Work practice standards,'' contains requirements for an inspection and maintenance plan in § 63.803(c)(1)–(4), which should be delegable. Because these paragraphs are reasonably separable from the other standards in the section, we have indicated that the requirements of those paragraphs are not considered part of the standard and, thus, are delegable. However, we renumbered the paragraphs in that section so the introductory paragraph of (c) is now (c)(1), and the subsequent paragraphs were renumbered as (c)(2)–(5) to accommodate that change.

To clarify which authorities are delegated, we have replaced the existing delegation provisions' language with the ''Implementation and enforcement'' section. This section, as proposed, indicates that delegation of authority to approve alternatives cannot be given to S/L/T agencies for the requirements in §§ 63.802 and 63.803(a)–(b), (c)(1), and (d)–(l), which contain the standards for this rule. This section also shows that delegation of authority to approve alternatives cannot be given to S/L/T agencies for the applicability provisions in § 63.800. To retain the intent of the original delegation provisions in § 63.808, the revised delegation section also reserves the monitoring and compliance assurance measures and test methods in §§ 63.804(f)(4)(iv)(D) and (E), 63.804(g)(4)(iii)(C), 63.804(g)(4)(vi), 63.804(g)(6)(vi), 63.805(a), 63.805(d)(2)(v), and 63.805(e)(1).

26. Subpart KK, National Emission Standards for the Printing and Publishing Industry

Subpart KK is the MACT standard for the printing and publishing industry. To clarify which authorities are delegated, we have replaced the existing delegation provisions' language with the ''Implementation and enforcement'' section. This section, as proposed, indicates that delegation of authority to approve alternatives cannot be given to S/L/T agencies for the requirements in §§ 63.820–63.821 and 63.824–63.826. These sections contain applicability provisions, compliance dates, standards for publication rotogravure printing and product and packaging rotogravure, and wide-web flexographic printing. We are not reserving § 63.823, which only indicates which general provisions requirements apply to subpart KK. As part of the implementation and enforcement language, we clarify that the authority to approve major alternatives to test methods is not delegated. In addition, to retain the intent of the original delegation paragraph language of § 63.831, the revised delegation provisions also clarify that the authority is not given to approve any alternatives to the test methods specified in § 63.827(b) and (c).

27. Subpart LL, National Emission Standards for Hazardous Air Pollutants for Primary Aluminum Reduction Plants

Subpart LL is the MACT standard for primary aluminum production plants. This subpart does not separate the delegable requirements from non-delegable authorities in some instances. Section 63.845, ''Incorporation of new source performance standards for potroom groups,'' contains requirements for applicability determinations, reporting requirements, and criteria to use to determine emissions quantities, which are not considered standards for this regulation. Since these measures are in paragraphs reasonably separable from the standards in the section, we have indicated that paragraphs § 63.845(a) and (f)–(g) are not considered part of the standard and are, thus, delegable.

To clarify which authorities are delegated, we have replaced the existing delegation provisions' language with the ''Implementation and enforcement'' section. This section now shows that delegation of authority to approve alternatives cannot be given to S/L/T agencies for the requirements in §§ 63.840, 63.843–63.844, 63.845(b)–(e), (h)–(i), and 63.846 which contain the applicability provisions, emission standards for existing and new or reconstructed sources, standards for incorporation of new source performance standards for potroom groups, and emissions averaging provisions.

28. Subpart OO, National Emission Standards for Tanks—Level 1

Subpart OO is the MACT national emission standard for level 1 tanks. This regulation is one subpart in a group of subparts that make up the off-site waste and recovery operations regulation, where each subpart regulates a specific group of emission points. These unit-specific subparts were written so that new rules for other MACT source categories can reference these subparts for some requirements. Therefore, it is important for each of these subparts to contain delegation provisions specific to the requirements of that subpart. Since this subpart does not contain delegation provisions, we have added the ''Implementation and enforcement'' section for the delegation provisions in a new section, § 63.908. This section, as proposed, indicates that delegation of authority to approve alternatives cannot be given to S/L/T agencies for the requirements in §§ 63.900 and 63.902, which contain the applicability provisions and emissions standards for tanks with fixed roofs.

29. Subpart PP, National Emission Standards for Containers

Subpart PP is the MACT national emission standard for containers. This regulation is one subpart in a group of subparts that make up the off-site waste and recovery operations regulation, where each subpart regulates a specific group of emission points. As explained above, it is important for each of these subparts to have delegation provisions specific to the requirements of that subpart. Since this subpart does not contain delegation provisions, we have added the ''Implementation and enforcement'' section for the delegation provisions in a new section, § 63.929. This section, as proposed, indicates that delegation of authority to approve alternatives cannot be given to S/L/T agencies for the requirements in §§ 63.920 and 63.922–63.924, which contain the applicability provisions and container level 1, 2, and 3 control standards.

In addition, this subpart requires that affected sources meet specific requirements that are contained in other subparts. In the implementation and enforcement language, we have clarified that delegation of those requirements will occur according to the delegation paragraph of the subpart that is referenced.

30. Subpart QQ, National Emission Standards for Surface Impoundments

Subpart QQ is the MACT national emission standard for surface impoundments. This regulation is one subpart in a group of subparts that make up the off-site waste and recovery operations regulation, where each subpart regulates a specific group of emission points. As explained above, it is important for each of these subparts to have delegation provisions specific to the requirements of that subpart. Since this subpart does not contain delegation provisions, we have added the ''Implementation and enforcement'' section for the delegation provisions in a new section, § 63.949. This section, as proposed, indicates that delegation of authority to approve alternatives cannot be given to S/L/T agencies for the requirements in §§ 63.940, and 63.942–

63.943, which contain the applicability provisions and emission standards for surface impoundments vented to control devices and for those with floating membrane covers. In addition, this rule requires provisions of subpart DD to be followed. In the implementation and enforcement language, we have clarified that delegation of those requirements will occur according to the delegation paragraph of subpart DD.

31. Subpart RR, National Emission Standards for Individual Drain Systems

Subpart RR is the MACT national emission standard for individual drain systems. This regulation is one subpart in a group of subparts that make up the off-site waste and recovery operations regulation, where each subpart regulates a specific group of emission points. As explained above, it is important for each of these subparts to have delegation provisions specific to the requirements of that subpart. Since this subpart does not have a delegation section, we have added the ''Implementation and enforcement'' section for the delegation provisions in a new section, § 63.967. This section, as proposed, indicates that delegation of authority to approve alternatives cannot be given to S/L/T agencies for the requirements in §§ 63.960 and 63.962, which contain the applicability provisions and emissions standards for this subpart. In addition, this subpart requires provisions of subpart DD to be followed. In the ''Implementation and enforcement'' section, we have clarified that delegation of those requirements will occur according to the delegation provisions of subpart DD.

32. Subpart VV, National Emission Standards for Oil-Water Separators and Organic-Water Separators

Subpart VV is the MACT national emission standard for oil-water and organic-water separators. This regulation is one subpart in a group of subparts that make up the off-site waste and recovery operations regulation, where each subpart regulates a specific group of emission points. As explained above, it is important for each of these subparts to have delegation provisions specific to the requirements of that subpart. Since, this subpart does not have a delegation section, we have added the ''Implementation and enforcement'' section for the delegation provisions in a new section, § 63.1050. This section, as proposed, indicates that delegation of authority to approve alternatives cannot be given to S/L/T agencies for the requirements in §§ 63.1040 and 63.1042–63.1044, which contain the applicability provisions, the emissions standards for separators with fixed and floating roofs, and those vented to a control device. In addition, this subpart requires provisions of subpart DD to be followed. In the implementation and enforcement language, we have clarified that delegation of those requirements will occur according to the delegation provisions of subpart DD.

33. Subpart CCC, National Emission Standards for Hazardous Air Pollutants for Steel Pickling—HCl Process Facilities and Hydrochloric Acid Regeneration Plants

Subpart CCC is the MACT standard for steel pickling—HCl process facilities and hydrochloric acid regeneration plants. To clarify which authorities are delegated, we have replaced the existing delegation provisions' language with the ''Implementation and enforcement'' section. This section, as proposed, indicates that delegation of authority to approve alternatives cannot be given to S/L/T agencies for the requirements in §§ 63.1155 and 63.1157–1159, which contain the applicability provisions and the emissions, operational, and equipment standards for existing, new, and reconstructed sources.

To retain the intent of the original delegation paragraph language, the revised delegation provisions reserve approval of alternative measurement methods for HCl and Cl_2 to those specified in § 63.1161(d)(1), reserve approval of alternative monitoring requirements to those specified in §§ 63.1162(a)(2)–(5) and 63.1162(b)(1)–(3), reserve the authority to grant a waiver of recordkeeping requirements specified in § 63.1165, and expressly delegate approval of an alternative schedule for conducting performance tests to the requirement specified in § 63.1162(a)(1).

34. Subpart DDD, National Emission Standards for Hazardous Air Pollutants for Mineral Wool Production

Subpart DDD is the MACT standard for mineral wool production. This subpart does not currently contain delegation provisions. To clarify which authorities are delegated, we have replaced the existing delegation provisions' language with the ''Implementation and enforcement'' section. This section, as proposed, indicates that delegation of authority to approve alternatives cannot be given to S/L/T agencies for the requirements in §§ 63.1177–63.1179, which contain the applicability provisions and the emission standards for cupolas and curing ovens.

35. Subpart EEE, National Emission Standards for Hazardous Air Pollutants From Hazardous Waste Combustors

Subpart EEE is the MACT standard for hazardous waste combustors. This subpart does not currently have a delegation section. To clarify which authorities are delegated, we have added the ''Implementation and enforcement'' section for the delegation provisions in a new section, § 63.1214. The delegation provisions show that delegation of authority to approve alternatives cannot be given to S/L/T agencies for the requirements in §§ 63.1200 and 63.1203–63.1205, which contain the applicability provisions and emission standards for this subpart.

36. Subpart GGG, National Emission Standards for Pharmaceuticals Production

To clarify which authorities are delegated, we have replaced the existing delegation provisions' language with the ''Implementation and enforcement'' section. This section, as proposed, indicates that delegation of authority to approve alternatives cannot be given to S/L/T agencies for the requirements in §§ 63.1250 and 63.1252–63.1256, which contain the applicability provisions and emission standards for this subpart. In addition, this subpart requires that affected sources meet specific requirements that are contained in other subparts. In the implementation and enforcement language, we have clarified that delegation of those requirements will occur according to the delegation provisions of the referenced subparts.

37. Subpart HHH, National Emission Standards for Hazardous Air Pollutants From Natural Gas Transmission and Storage Facilities

Subpart HHH is the MACT standard for natural gas transmission and storage. This subpart does not separate delegable from non-delegable authorities in some instances. The standards section, § 63.1281, ''Control equipment requirements,'' contains inspection and monitoring requirements, which are considered delegable requirements. To separate these delegable requirements from non-delegable authorities in that section, we have removed the language for inspection and monitoring requirements from § 63.1281 and added it to § 63.1283, ''Inspection and monitoring requirements,'' in paragraph (c)(2)(iii).

To clarify which authorities are delegated, we have replaced the existing delegation provisions' language with the ''Implementation and enforcement'' section. This section, as proposed,

indicates that delegation of authority to approve alternatives cannot be given to S/L/T agencies for the requirements in §§ 63.1270, 63.1275, and 63.1281, which contain applicability provisions, glycol dehydration unit process vent standards, and control equipment requirements.

In addition, subpart HHH contains a section, § 63.1287, which describes procedures that should be followed for approval of an alternative means of emission limitation. To retain the intent of the original language of § 63.1287, the delegation provisions also reserve that section.

38. Subpart III, National Emission Standards for Hazardous Air Pollutants for Flexible Polyurethane Foam Production

Subpart III is the MACT standard for flexible polyurethane foam production. To clarify which authorities are delegated, we have replaced the existing delegation provisions' language with the ''Implementation and enforcement'' section. This section, as proposed, indicates that delegation of authority to approve alternatives cannot be given to S/L/T agencies for the requirements in §§ 63.1920 and 63.1293–63.1301, and 63.1305(d) which contain the applicability provisions, emission standards for this rule, and provisions for approval of an alternative means of emission limitation.

39. Subpart JJJ, National Emission Standards for Hazardous Air Pollutant Emissions: Group IV Polymers and Resins

Subpart JJJ is the MACT standard for Group IV polymers and resins. This subpart currently does not contain delegation provisions. To clarify which authorities are delegated, we have added the ''Implementation and enforcement'' section for the delegation provisions in a new section, § 63.1336. This section, as proposed, indicates that delegation of authority to approve alternatives cannot be given to S/L/T agencies for the requirements in §§ 63.1310–63.1311, 63.1313–63.1316, 63.1321–63.1323, and 63.1328–63.1332, which contain the applicability provisions, compliance dates, the emissions standards, and the emissions averaging provisions for this subpart.

This subpart also requires that provisions of another subpart be followed, with slight changes. In the implementation and enforcement delegation provisions language, we have clarified that those requirements should be changed as directed, and then delegation of those requirements will occur according to the delegation provisions of the subpart that is referenced. For example, subpart JJJ references subpart H, §§ 63.182(a)(2) and 63.182(c) but slightly changes these requirements. We clarify in this rulemaking that although subpart JJJ changes these specific subpart H requirements for the purposes of subpart JJJ, the delegation of these referenced requirements follow the original delegation of subpart H.

40. Subpart LLL, National Emission Standards for Hazardous Air Pollutants From the Portland Cement Manufacturing Industry

Subpart LLL is the MACT standard for portland cement production. To clarify which authorities are delegated, we have replaced the existing delegation provisions' language with the ''Implementation and enforcement'' section. This section, as proposed, indicates that delegation of authority to approve alternatives cannot be given to S/L/T agencies for the requirements in §§ 63.1340, and 63.1343–63.1348, which contain the applicability provisions, emission standards and operating limits for kiln and in-line kiln/raw mills, and the standards for clinker coolers, new and reconstructed raw material dryers, raw and finish mills, and other sources.

41. Subpart MMM, National Emission Standards for Hazardous Air Pollutants for Pesticide Active Ingredient Production

Subpart MMM is the MACT standard for pesticide active ingredient production. This subpart does not separate delegable requirements from the non-delegable standards in some instances. Section 63.1362, ''Standards,'' contains delegable monitoring requirements for closed vent systems in § 63.1362(j). We have restructured this section to remove the specific monitoring requirements and placed them in § 63.1366, ''Monitoring and inspection requirements,'' in paragraphs § 63.1366(b)(1)(xiii)(B) and (C).

To clarify which authorities are delegated, we have replaced the existing delegation provisions' language with the ''Implementation and enforcement'' section. This section, as proposed, indicates that delegation of authority to approve alternatives cannot be given to S/L/T agencies for the requirements in §§ 63.1360 and 63.1362–63.1363, which contain the applicability provisions, emission standards, and standards for equipment leaks. This rule also requires that provisions of another subpart be followed, with slight changes. In the ''Implementation and enforcement'' section, we have clarified that those requirements should be changed as directed, and then delegation of those requirements will occur according to the delegation provisions of the subpart that is referenced.

42. Subpart NNN, National Emission Standards for Hazardous Air Pollutants for Wool Fiberglass Manufacturing

Subpart NNN is the MACT standard for wool fiberglass manufacturing. This subpart does not have a delegation paragraph. To clarify which authorities are delegated, we have added the ''Implementation and enforcement'' section for the delegation provision in a new section, § 63.1388. This section, as proposed, indicates that delegation of authority to approve alternatives cannot be given to S/L/T agencies for the requirements in §§ 63.1380 and 63.1382, which contain the applicability provisions and the emissions standards for this subpart.

43. Subpart OOO, National Emission Standards for Hazardous Air Pollutants for Amino/Phenolic Resins Production

Subpart OOO is the MACT standard for Group III polymers and resins: amino and phenolic resins. To clarify which authorities are delegated, we have replaced the existing delegation provisions' language with the ''Implementation and enforcement'' section. This section, as proposed, indicates that delegation of authority to approve alternatives cannot be given to S/L/T agencies for the requirements in §§ 63.1400 and 63.1404–63.1410, which contain the applicability provisions and the emission standards for process vents, storage vessels, heat exchangers, and equipment leaks. In addition, this rule requires that affected sources meet specific requirements that are contained in other subparts. In the implementation and enforcement language, we have clarified that delegation of those requirements will occur according to the delegation provisions of the referenced subparts. Where subpart OOO requires that affected sources meet specific requirements that are contained in other subparts, but makes certain changes to those provisions, we have clarified that those provisions should be changed accordingly and then delegated according to the delegation provisions of the referenced subpart.

44. Subpart PPP, National Emission Standards for Hazardous Air Pollutant Emissions for Polyether Polyols Production

Subpart PPP is the MACT standard for polyether polyols production. To clarify which authorities are delegated, we have replaced the existing delegation

provisions' language with the ''Implementation and enforcement'' section. This section, as proposed, indicates that delegation of authority to approve alternatives cannot be given to S/L/T agencies for the requirements in §§ 63.1420, 63.1422, 63.1424–63.1428 and 63.1432–63.1436, which contain the applicability provisions, compliance dates, and emission standards for this subpart. In addition, this rule requires that affected sources meet specific requirements that are contained in other subparts. In the implementation and enforcement language, we have clarified that delegation of those requirements will occur according to the delegation provisions of the referenced subparts. Where subpart PPP requires that affected sources meet specific requirements that are contained in other subparts, but makes certain changes to those provisions, we have clarified that those provisions should be modified accordingly and then delegated according to the delegation provisions of the referenced subpart.

45. Subpart RRR, National Emission Standards for Secondary Aluminum Production

Subpart RRR is the MACT standard for secondary aluminum production. To clarify which authorities are delegated, we have replaced the existing delegation provisions' language with the ''Implementation and enforcement'' section. This section, as proposed, indicates that delegation of authority to approve alternatives cannot be given to S/L/T agencies for the requirements in §§ 63.1500 and 63.1505–63.1506, which contain the applicability provisions and the emission standards and operating requirements for this subpart.

46. Subpart TTT, National Emission Standards for Hazardous Air Pollutants for Primary Lead Smelting

Subpart TTT is the MACT standard for primary lead smelting. This subpart does not separate the delegable from the non-delegable authorities in some instances. Section 63.1543, ''Standards for process and process fugitive sources,'' contains compliance testing requirements in paragraphs (d)–(e), which are considered delegable requirements. Since these paragraphs are reasonably separable from the other standards in the section, we have indicated that the requirements in paragraphs (d)–(e) are not considered part of the standard and, thus, are delegable.

To clarify which authorities are delegated, we have replaced the existing delegation provisions' language with the ''Implementation and enforcement'' section. This section, as proposed, indicates that delegation of authority to approve alternatives cannot be given to S/L/T agencies for the requirements in §§ 63.1541, 63.1543(a)–(c), (f)–(g), and 63.1544, which contain the applicability provisions and emission standards for process and process fugitive sources, and fugitive dust sources.

47. Subpart VVV, National Emission Standards for Hazardous Air Pollutants: Publicly Owned Treatment Works

Subpart VVV is the MACT standard for publicly owned treatment works. To clarify which authorities are delegated, we have replaced the existing delegation provisions' language with the ''Implementation and enforcement'' section. This section, as proposed, indicates that delegation of authority to approve alternatives cannot be given to S/L/T agencies for the requirements in §§ 63.1580, 63.1583, and 63.1586, which contain the applicability provisions and the emissions and control standards for industrial and non-industrial publicly owned treatment works.

48. Subpart XXX, National Emission Standards for Hazardous Air Pollutants for Ferroalloys Production: Ferromanganese and Silicomanganese

Subpart XXX is the MACT standard for ferroalloys production. To clarify which authorities are delegated, we have replaced the existing delegation provisions' language with the ''Implementation and enforcement'' section. This section, as proposed, indicates that delegation of authority to approve alternatives cannot be given to S/L/T agencies for the requirements in §§ 63.1650 and 63.1652–63.1654, which contain the applicability provisions, the opacity and non-opacity emission standards, and the operational and work practice standards for this rule.

III. Administrative Requirements

A. Docket

The docket for this regulatory action is docket number A–2000–57. The principal purposes of the docket are:

(1) To allow interested parties a means to identify and locate documents so that they can effectively participate in the rulemaking process; and (2) to serve as the record in case of judicial review (except for interagency review materials) (Section 307(d)(7)(A) of the Act). The docket is available for public inspection at the EPA's Air and Radiation Docket and Information Center, the location of which is given in the **ADDRESSES** section of this rule.

B. Executive Order 12866—Regulatory Planning and Review

Under Executive Order 12866 (58 FR 51735, October 4, 1993), the EPA must determine whether the regulatory action is ''significant'' and therefore subject to review by the Office of Management and Budget (OMB) on the basis of the requirements of the Executive Order, in addition to its normal review requirements. The Executive Order defines ''significant regulatory action'' as one that is likely to result in a rule that may:

(1) Have an annual effect on the economy of $100 million or more or adversely affect in a material way the economy, a sector of the economy, productivity, competition, jobs, the environment, public health or safety, or State, Local, or Tribal governments or communities;

(2) Create a serious inconsistency or otherwise interfere with an action taken or planned by another agency;

(3) Materially alter the budgetary impact of entitlements, grants, user fees, or loan programs, or the rights and obligations of recipients thereof; or

(4) Raise novel legal or policy issues arising out of legal mandates, the President's priorities, or the principles set forth in the Executive Order.

These proposed rule changes will not have an annual effect on the economy of $100 million or more, and therefore are not considered economically significant. In addition, we have determined that this rule is not a ''significant regulatory action'' because it does not contain novel policy issues.

C. Executive Order 13132—Federalism

Executive Order 13132, entitled ''Federalism'' (64 FR 43255, August 10, 1999), requires EPA to develop an accountable process to ensure ''meaningful and timely input by State and Local officials in the development of regulatory policies that have federalism implications.'' ''Policies that have federalism implications'' is defined in the Executive Order to include regulations that have ''substantial direct effects on the States, on the relationship between the national government and the States, or on the distribution of power and responsibilities among the various levels of government.''

Under section 6 of Executive Order 13132, EPA may not issue a regulation that has federalism implications, that imposes substantial direct compliance costs, and that is not required by statute, unless the Federal government provides the funds necessary to pay the direct compliance costs incurred by State and

Local governments or EPA consults with State and Local officials early in the process of developing the proposed regulation. The EPA also may not issue a regulation that has federalism implications and that preempts State law, unless the Agency consults with State and Local officials early in the process of developing the proposed regulation.

The proposed changes in today's rulemaking do not have federalism implications. They will not have substantial direct effects on the States, on the relationship between the national government and the States, or on the distribution of power and responsibilities among the various levels of government, as specified in Executive Order 13132, because this proposed rule only clarifies which portions of the existing NESHAP contain authorities that can be delegated to State, Local, and Tribal (S/L/T) governments and does not create any new requirements for S/L/Ts. In other words, this rulemaking only makes insignificant clarifications to existing NESHAP and is not expected to have any additional impact on the relationship between S/L/Ts and the Federal government. Thus, the requirements of section 6 of the Executive Order do not apply to today's rulemaking. Nevertheless, EPA will consider comments from S/L/T agencies to enable them to provide meaningful and timely input in the development of the final changes.

D. Executive Order 13175—Consultation with Tribal Governments

On November 6, 2000, the President issued Executive Order 13175 (65 CFR 67249) entitled, ''Consultation and Coordination with Indian Tribal Governments.'' Executive Order 13175 took effect on January 6, 2001, and revokes Executive Order 13084 (Tribal Consultation) as of that date. However, the rules that we propose to amend were developed during the period when Executive Order 13084 was in effect; thus, EPA addressed tribal considerations under Executive Order 13084. The EPA will analyze and fully comply with the requirements of Executive Order 13175 before promulgating the final rule.

Under Executive Order 13084, EPA may not issue a regulation that is not required by statute, that significantly or uniquely affects the communities of Indian tribal governments, and that imposes substantial direct compliance costs on those communities, unless the Federal government provides the funds necessary to pay the direct compliance costs incurred by the tribal governments, or EPA consults with those governments. If EPA complies by consulting, Executive Order 13084 requires EPA to provide to OMB, in a separately identified section of the preamble to the rule, a description of the extent of EPA's prior consultation with representatives of affected tribal governments, a summary of the nature of their concerns, and a statement supporting the need to issue the regulation. In addition, Executive Order 13084 requires EPA to develop an effective process permitting elected officials and other representatives of Indian tribal governments ''to provide meaningful and timely input in the development of regulatory policies on matters that significantly or uniquely affect their communities.''

The proposed changes in today's rulemaking do not significantly or uniquely affect the communities of Indian tribal governments. Because they implement a voluntary program, they impose no direct compliance costs on these communities. Accordingly, the requirements of section 3(b) of Executive Order 13084 do not apply.

E. Paperwork Reduction Act

This action does not impose an information collection burden under the provisions of the Paperwork Reduction Act, 44 U.S.C. 3501 *et seq*. The proposed changes are being made to rules that already have approved information collection requirements and valid OMB control numbers as required by the Paperwork Reduction Act. The proposed changes in today's rulemaking are clarifications to the relationship between EPA and the S/L/T agencies that have chosen to implement and enforce the rules. Therefore, there is no change in the burden that the rules impose on sources or S/L/Ts.

Burden means the total time, effort, or financial resources expended by persons to generate, maintain, retain, or disclose or provide information to or for a Federal agency. This includes the time needed to review instructions; develop, acquire, install, and utilize technology and systems for the purpose of collecting, validating, and verifying information; process and maintain information and disclose and provide information; adjust the existing ways to comply with any previously applicable instructions and requirements; train personnel to respond to a collection of information; search existing data sources; complete and review the collection of information; and transmit or otherwise disclose the information.

An agency may not conduct or sponsor, and a person is not required to respond to a collection of information unless it displays a currently valid OMB control number. The OMB control numbers for EPA's regulations are listed in 40 CFR part 9 and 48 CFR chapter 15.

F. Regulatory Flexibility Act (RFA), as Amended by the Small Business Regulatory Enforcement Fairness Act of 1996 (SBREFA), 5 U.S.C. 601 et seq.

The RFA generally requires an agency to prepare a regulatory flexibility analysis of any rule subject to notice and comment rulemaking requirements unless the agency certifies that the rule will not have a significant economic impact on a substantial number of small entities. Small entities include small businesses, small organizations, and small governmental jurisdictions.

We believe that there will be little or no impact on small entities as a result of these rule revisions. State, Local, and Tribal governments are the only entities affected by this action and we expect that most or all of the governments which would have the authority to accept delegation under section 112(l) of the Act are those whose populations exceed 50,000 persons and are thus, not considered ''small.'' In the case of Tribal jurisdictions where population will not exceed 50,000 persons, we still believe that there will be little or no impact as a result of these revisions because none currently have air toxics programs. Furthermore, these rule revisions add flexibility and clarity to the existing NESHAP that these governments may choose to implement and enforce and, therefore, eases rather than imposes burdens. Accordingly, because few or none of the affected entities are expected to be small entities and because the regulatory impacts will be insignificant, I hereby certify that this rule will not have a significant economic impact on a substantial number of small entities.

G. Unfunded Mandates Reform Act of 1995

Title II of the Unfunded Mandates Reform Act of 1995 (UMRA), Public Law 104–4, establishes requirements for Federal agencies to assess the effects of their regulatory actions on S/L/T governments and the private sector. Under section 202 of the UMRA, we generally must prepare a written statement, including a cost-benefit analysis, for proposed and final rules with ''Federal mandates'' that may result in expenditures to S/L/T governments, in the aggregate, or to the private sector of $100 million or more in any 1 year. Before promulgating an EPA rule for which a written statement is needed, section 205 of the UMRA generally requires us to identify and

consider a reasonable number of regulatory alternatives and adopt the least costly, most cost-effective, or least burdensome alternative that achieves the objectives of the rule. The provisions of section 205 do not apply when they are inconsistent with applicable law. Moreover, section 205 allows us to adopt an alternative other than the least costly, most cost-effective, or least burdensome alternative if EPA publishes with the final rule an explanation why that alternative was not adopted. Before we establish any regulatory requirements that may significantly or uniquely affect small governments, including Tribal governments, we must have developed under section 203 of the UMRA a small government agency plan. The plan must provide for notifying potentially affected small governments, enabling officials of affected small governments to have meaningful and timely input in the development of EPA regulatory proposals with significant Federal intergovernmental mandates, and informing, educating, and advising small governments on compliance with the regulatory requirements.

The proposed rule changes contain no Federal mandates (under the regulatory provisions of Title II of the UMRA) for S/L/T governments or the private sector. Because the rule is estimated to result in the expenditure by S/L/T governments of significantly less than $100 million in any 1 year, we have not prepared a budgetary impact statement or specifically addressed the selection of the least costly, most effective, or least burdensome alternative. Because small governments will not be significantly or uniquely affected by this rule, we are not required to develop a plan with regard to small governments. Moreover, this action clarifies the relationship between EPA and the S/L/T agencies who have voluntarily requested delegation of the part 63 NESHAP, so it does not impose any mandates on those entities. Therefore, the requirements of the Unfunded Mandates Reform Act do not apply to this action.

H. Executive Order 13045—Protection of Children From Environmental Health Risks and Safety Risks

Executive Order 13045 applies to any rule that EPA determines (1) is economically significant as defined under Executive Order 12866, and (2) the environmental health or safety risk addressed by the rule has a disproportionate effect on children. If the regulatory action meets both criteria, the Agency must evaluate the environmental health or safety effects of the planned rule on children and explain why the planned regulation is preferable to other potentially effective and reasonable alternatives considered by the Agency.

These proposed changes are not subject to Executive Order 13045, entitled Protection of Children from Environmental Health Risks and Safety Risks (62 FR 19885, April 23, 1997), because they are not an economically significant regulatory action as defined by Executive Order 12866, and because the Agency does not have reason to believe the environmental health or safety risks addressed by this action present a disproportionate risk to children.

I. National Technology Transfer and Advancement Act of 1995

Section 12(d) of the National Technology Transfer and Advancement Act (NTTAA) of 1995 (Public Law 104–113) (15 U.S.C. 272 note) directs EPA to use voluntary consensus standards in their regulatory and procurement activities unless to do so would be inconsistent with applicable law or otherwise impractical. Voluntary consensus standards are technical standards (e.g., materials specifications, test methods, sampling procedures, business practices) developed or adopted by one or more voluntary consensus bodies. The NTTAA directs EPA to provide Congress, through annual reports to the Office of Management and Budget (OMB), with explanations when an agency does not use available and applicable voluntary consensus standards.

The proposed changes do not affect selection of technical standards that are contained in the existing subparts. Therefore, we are not considering the use of any voluntary consensus standards.

J. Executive Order 13211—Energy Effects

This rule is not subject to Executive Order 13211, ''Actions Concerning Regulations That Significantly Affect Energy Supply, Distribution, or Use'' (66 FR 28355 (May 22, 2001)) because it is not a significant regulatory action under Executive Order 12866.

List of Subjects in 40 CFR Part 63

Environmental protection, Administrative practices and procedures, Air pollution control, Hazardous substances, Intergovernmental relations, Reporting and recordkeeping requirements.

Dated: December 19, 2001.

Christine Todd Whitman,

Administrator.

For the reasons set out in the preamble, title 40, chapter 1 of the Code of Federal Regulations is proposed to be amended as follows:

PART 63—[AMENDED]

1. The authority citation for part 63 continues to read as follows:

Authority: 42 U.S.C. 7401, *et seq.*

Subpart F—[Amended]

2. Section 63.106 is revised to read as follows:

§ 63.106 Implementation and enforcement.

(a) This subpart can be implemented and enforced by the U.S. EPA, or a delegated authority such as the applicable State, local, or tribal agency. If the U.S. EPA Administrator has delegated authority to a State, local, or tribal agency, then that agency, in addition to the U.S. EPA, has the authority to implement and enforce this subpart. Contact the applicable U.S. EPA Regional Office to find out if implementation and enforcement of this subpart is delegated to a State, local, or tribal agency.

(b) In delegating implementation and enforcement authority of this subpart to a State, local, or tribal agency under subpart E of this part, the authorities contained in paragraph (c) of this section are retained by the Administrator of U.S. EPA and cannot be transferred to the State, local, or tribal agency.

(c) The authorities that cannot be delegated to State, local, or tribal agencies are as specified in paragraphs (c)(1) through (4) of this section.

(1) Approval of alternatives to requirements in §§ 63.100, 63.102, and 63.104. Where these standards reference another subpart, the cited provisions will be delegated according to the delegation provisions of the referenced subpart.

(2) Approval of major alternatives to test methods under § 63.7(e)(2)(ii) and (f), as defined in § 63.90, and as required in this subpart.

(3) Approval of major alternatives to monitoring under § 63.8(f), as defined in § 63.90, and as required in this subpart.

(4) Approval of major alternatives to recordkeeping and reporting under § 63.10(f), as defined in § 63.90, and as required in this subpart.

Subpart G—[Amended]

3. Section 63.153 is added to Subpart G to read as follows:

§ 63.153 Implementation and enforcement.

(a) This subpart can be implemented and enforced by the U.S. EPA, or a delegated authority such as the applicable State, local, or tribal agency. If the U.S. EPA Administrator has delegated authority to a State, local, or tribal agency, then that agency, in addition to the U.S. EPA, has the authority to implement and enforce this subpart. Contact the applicable U.S. EPA Regional Office to find out if implementation and enforcement of this subpart is delegated to a State, local, or tribal agency.

(b) In delegating implementation and enforcement authority of this subpart to a State, local, or tribal agency under subpart E of this part, the authorities contained in paragraph (c) of this section are retained by the Administrator of U.S. EPA and cannot be transferred to the State, local, or tribal agency.

(c) The authorities that cannot be delegated to State, local, or tribal agencies are as specified in paragraphs (c)(1) through (4) of this section.

(1) Approval of alternatives to the requirements in §§ 63.110, 63.112 and 63.113, 63.119, 63.126, 63.132 through 63.140, 63.148–63.149, and 63.150(i)(1) through (4). Follow the requirements in § 63.121 to request permission to use an alternative means of emission limitation for storage vessels. Where these standards reference another subpart, the cited provisions will be delegated according to the delegation provisions of the referenced subpart. Where these standards reference another subpart and modify the requirements, the requirements shall be modified as described in this subpart. Delegation of the modified requirements will also occur according to the delegation provisions of the referenced subpart.

(2) Approval of major alternatives to test methods under § 63.7(e)(2)(ii) and (f), as defined in § 63.90, and as required in this subpart.

(3) Approval of major alternatives to monitoring under § 63.8(f), as defined in § 63.90, and as required in this subpart.

(4) Approval of major alternatives to recordkeeping and reporting under § 63.10(f), as defined in § 63.90, and as required in this subpart.

Subpart H—[Amended]

4. Section 63.183 is added to Subpart H to read as follows:

§ 63.183 Implementation and enforcement.

(a) This subpart can be implemented and enforced by the U.S. EPA, or a delegated authority such as the applicable State, local, or tribal agency. If the U.S. EPA Administrator has delegated authority to a State, local, or tribal agency, then that agency, in addition to the U.S. EPA, has the authority to implement and enforce this subpart. Contact the applicable U.S. EPA Regional Office to find out if implementation and enforcement of this subpart is delegated to a State, local, or tribal agency.

(b) In delegating implementation and enforcement authority of this subpart to a State, local, or tribal agency under subpart E of this part, the authorities contained in paragraph (c) of this section are retained by the Administrator of U.S. EPA and cannot be transferred to the State, local, or tribal agency.

(c) The authorities that cannot be delegated to State, local, or tribal agencies are as specified in paragraphs (c)(1) through (4) of this section.

(1) Approval of alternatives to the requirements in §§ 63.160, 63.162–63.176, 63.178–63.179. Follow the applicable procedures of § 63.177 to request an alternative means of emission limitation for batch processes and enclosed-vented process units. Where these standards reference another subpart, the cited provisions will be delegated according to the delegation provisions of the referenced subpart. Where these standards reference another subpart and modify the requirements, the requirements shall be modified as described in this subpart. Delegation of the modified requirements will also occur according to the delegation provisions of the referenced subpart.

(2) Approval of major alternatives to test methods under § 63.7(e)(2)(ii) and (f), as defined in § 63.90, and as required in this subpart.

(3) Approval of major alternatives to monitoring under § 63.8(f), as defined in § 63.90, and as required in this subpart.

(4) Approval of major alternatives to recordkeeping and reporting under § 63.10(f), as defined in § 63.90, and as required in this subpart.

Subpart I—[Amended]

5. Section 63.193 is revised to read as follows:

§ 63.193 Implementation and enforcement.

(a) This subpart can be implemented and enforced by the U.S. EPA, or a delegated authority such as the applicable State, local, or tribal agency. If the U.S. EPA Administrator has delegated authority to a State, local, or tribal agency, then that agency, in addition to the U.S. EPA, has the authority to implement and enforce this subpart. Contact the applicable U.S. EPA Regional Office to find out if implementation and enforcement of this subpart is delegated to a State, local, or tribal agency.

(b) In delegating implementation and enforcement authority of this subpart to a State, local, or tribal agency under subpart e of this part, the authorities contained in paragraph (c) of this section are retained by the Administrator of U.S. EPA and cannot be transferred to the State, local, or tribal agency.

(c) The authorities that cannot be delegated to State, local, or tribal agencies are as specified in paragraphs (c)(1) through (4) of this section.

(1) Approval of alternatives to the requirements in §§ 63.190 and 63.192(a) and (b), (e), and (h) through (j). Where these standards reference another subpart, the cited provisions will be delegated according to the delegation provisions of the referenced subpart.

(2) Approval of major alternatives to test methods under § 63.7(e)(2)(ii) and (f), as defined in § 63.90, and as required in this subpart.

(3) Approval of major alternatives to monitoring under § 63.8(f), as defined in § 63.90, and as required in this subpart.

(4) Approval of major alternatives to recordkeeping and reporting under § 63.10(f), as defined in § 63.90, and as required in this subpart.

Subpart L—[Amended]

6. Section 63.309 is amended by revising (a)(5)(i) to read as follows:

§ 63.309 Performance tests and procedures.

(a) * * *

(5)(i) The EPA shall be the enforcement agency during any period of time that a delegation of enforcement authority is not in effect or a withdrawal of enforcement authority under § 63.313 is in effect, and the Administrator is responsible for performing the inspections required by this section, pursuant to § 63.313(c).

* * * * *

7. Section 63.313 is revised to read as follows:

§ 63.313 Implementation and enforcement.

(a) This subpart can be implemented and enforced by the U.S. EPA, or a delegated authority such as the applicable State, local, or tribal agency. If the U.S. EPA Administrator has delegated authority to a State, local, or tribal agency, then that agency, in addition to the U.S. EPA, has the authority to implement and enforce this subpart. Contact the applicable U.S. EPA Regional Office to find out if implementation and enforcement of this

subpart is delegated to a State, local, or tribal agency.

(b) In delegating implementation and enforcement authority of this subpart to a State, local, or tribal agency under subpart e of this part, the authorities contained in paragraph (d) of this section are retained by the Administrator and cannot be transferred to the State, local, or tribal agency.

(c) *Withdrawal of authority.* (1) Whenever the Administrator learns that a delegated agency has not fully carried out the inspections and performance tests required under § 63.309 for each applicable emission point of each battery each day, the Administrator shall immediately notify the agency. Unless the delegated agency demonstrates to the Administrator's satisfaction within 15 days of notification that the agency is consistently carrying out the inspections and performance tests required under § 63.309 in the manner specified in the preceding sentence, the Administrator shall notify the coke oven battery owner or operator that inspections and performance tests shall be carried out according to § 63.309(a)(5). When the Administrator determines that the delegated agency is prepared to consistently perform all the required inspections and performance tests each day, the Administrator shall give the coke oven battery owner or operator at least 15 days notice that implementation will revert to the previously delegated agency.

(2) In addition to the provisions in paragraph (c)(1) of this section, the Administrator may also withdraw delegation of authority pursuant to the provisions of § 63.96 of subpart E of this part.

(d) The authorities that cannot be delegated to State, local, or tribal agencies are as specified in paragraphs (d)(1) through (5) of this section.

(1) Approval of alternatives to the requirements in §§ 63.300 and 63.302 through 63.308.

(2) Approval of major alternatives to test methods under § 63.7(e)(2)(ii) and (f), as defined in § 63.90, and as required in this subpart.

(3) Approval of any changes to section 2 of Method 303 in appendix A of this part.

(4) Approval of major alternatives to monitoring under § 63.8(f), as defined in § 63.90, and as required in this subpart.

(5) Approval of major alternatives to recordkeeping and reporting under § 63.10(f), as defined in § 63.90, and as required in this subpart.

Subpart M—[Amended]

8. Section 63.326 is added to Subpart M to read as follows:

§ 63.326 Implementation and enforcement.

(a) This subpart can be implemented and enforced by the U.S. EPA, or a delegated authority such as the applicable State, local, or tribal agency. If the U.S. EPA Administrator has delegated authority to a State, local, or tribal agency, then that agency, in addition to the U.S. EPA, has the authority to implement and enforce this subpart. Contact the applicable U.S. EPA Regional Office to find out if implementation and enforcement of this subpart is delegated to a State, local, or tribal agency.

(b) In delegating implementation and enforcement authority of this subpart to a State, local, or tribal agency under subpart e of this part, the authorities contained in paragraph (c) of this section are retained by the Administrator of U.S. EPA and cannot be transferred to the State, local, or tribal agency.

(c) The authorities that cannot be delegated to State, local, or tribal agencies are as specified in paragraphs (c)(1) through (4) of this section.

(1) Approval of alternatives to the requirements in §§ 63.320 and 63.322(a) through (j). Follow the requirements in § 63.325 to demonstrate that alternative equipment or procedures are equivalent to the requirements of § 63.322.

(2) Approval of major alternatives to test methods under § 63.7(e)(2)(ii) and (f), as defined in § 63.90, and as required in this subpart.

(3) Approval of major alternatives to monitoring under § 63.8(f), as defined in § 63.90, and as required in this subpart.

(4) Approval of major alternatives to recordkeeping and reporting under § 63.10(f), as defined in § 63.90, and as required in this subpart.

Subpart N—[Amended]

9. Section 63.342 is amended:

a. By revising paragraph (f) introductory text.

b. Revising paragraph (f)(3)(i) introductory text.

c. Revising paragraphs (f)(3)(i)(B) and (C).

d. Revising the headings for Table 1 and its columns.

The revisions read as follows:

§ 63.342 Standards.

* * * * *

(f) *Operation and maintenance practices.* All owners or operators subject to the standards in paragraphs (c) and (d) of this section are subject to these operation and maintenance practices.

* * * * *

(3) *Operation and maintenance plan.* (i) The owner or operator of an affected source subject to paragraph (f) of this section shall prepare an operation and maintenance plan to be implemented no later than the compliance date, except for hard chromium electroplaters and the chromium anodizing operations in California which have until January 25, 1998. The plan shall be incorporated by reference into the source's title V permit, if and when a title V permit is required. The plan shall include the following elements:

* * * * *

(B) For sources using an add-on control device or monitoring equipment to comply with this subpart, the plan shall incorporate the operation and maintenance practices for that device or monitoring equipment, as identified in Table 1 of this section, if the specific equipment used is identified in Table 1 of this section;

(C) If the specific equipment used is not identified in Table 1 of this section, the plan shall incorporate proposed operation and maintenance practices. These proposed operation and maintenance practices shall be submitted for approval as part of the submittal required under § 63.343(d);

* * * * *

TABLE 1 TO § 63.342.—SUMMARY OF OPERATION AND MAINTENANCE PRACTICES

Control technique	Operation and maintenance practices	Frequency
*	*	*	*	*

10. Section 63.343 is amended by revising paragraph (d) to read as follows:

§ 63.343 Compliance provisions.

* * * * *

(d) An owner or operator who uses an air pollution control device not listed in this section shall submit a description of the device, test results collected in accordance with § 63.344(c) verifying the performance of the device for reducing chromium emissions to the atmosphere to the level required by this subpart, a copy of the operation and maintenance plan referenced in § 63.342(f) including operation and maintenance practices, and appropriate operating parameters that will be monitored to establish continuous

compliance with the standards. The monitoring plan submitted identifying the continuous compliance monitoring is subject to the Administrator's approval.

11. Section 63.348 is added to Subpart N to read as follows:

§ 63.348 Implementation and enforcement.

(a) This subpart can be implemented and enforced by the U.S. EPA, or a delegated authority such as the applicable State, local, or tribal agency. If the U.S. EPA Administrator has delegated authority to a State, local, or tribal agency, then that agency, in addition to the U.S. EPA, has the authority to implement and enforce this subpart. Contact the applicable U.S. EPA Regional Office to find out if implementation and enforcement of this subpart is delegated to a State, local, or tribal agency.

(b) In delegating implementation and enforcement authority of this subpart to a State, local, or tribal agency under subpart E of this part, the authorities contained in paragraph (c) of this section are retained by the Administrator of U.S. EPA and cannot be transferred to the State, local, or tribal agency.

(c) The authorities that cannot be delegated to State, local, or tribal agencies are as specified in paragraphs (c)(1) through (4) of this section.

(1) Approval of alternatives to the requirements in §§ 63.340 and 63.342(a) through (e) and (g).

(2) Approval of major alternatives to test methods under § 63.7(e)(2)(ii) and (f), as defined in § 63.90, and as required in this subpart.

(3) Approval of major alternatives to monitoring under § 63.8(f), as defined in § 63.90, and as required in this subpart.

(4) Approval of major alternatives to recordkeeping and reporting under § 63.10(f), as defined in § 63.90, and as required in this subpart.

Subpart O—[Amended]

12. Section 63.368 is added to Subpart O to read as follows:

§ 63.368 Implementation and enforcement.

(a) This subpart can be implemented and enforced by the U.S. EPA, or a delegated authority such as the applicable State, local, or tribal agency. If the U.S. EPA Administrator has delegated authority to a State, local, or tribal agency, then that agency, in addition to the U.S. EPA, has the authority to implement and enforce this subpart. Contact the applicable U.S. EPA Regional Office to find out if implementation and enforcement of this subpart is delegated to a State, local, or tribal agency.

(b) In delegating implementation and enforcement authority of this subpart to a State, local, or tribal agency under subpart E of this part, the authorities contained in paragraph (c) of this section are retained by the Administrator of U.S. EPA and cannot be transferred to the State, local, or tribal agency.

(c) The authorities that cannot be delegated to State, local, or tribal agencies are as specified in paragraphs (c)(1) through (4) of this section.

(1) Approval of alternatives to the requirements in §§ 63.360 and 63.362.

(2) Approval of major alternatives to test methods under § 63.7(e)(2)(ii) and (f), as defined in § 63.90, and as required in this subpart.

(3) Approval of major alternatives to monitoring under § 63.8(f), as defined in § 63.90, and as required in this subpart.

(4) Approval of major alternatives to recordkeeping and reporting under § 63.10(f), as defined in § 63.90, and as required in this subpart.

Subpart Q—[Amended]

13. Section 63.407 is added to Subpart Q to read as follows:

§ 63.407 Implementation and enforcement.

(a) This subpart can be implemented and enforced by the U.S. EPA, or a delegated authority such as the applicable State, local, or tribal agency. If the U.S. EPA Administrator has delegated authority to a State, local, or tribal agency, then that agency, in addition to the U.S. EPA, has the authority to implement and enforce this subpart. Contact the applicable U.S. EPA Regional Office to find out if implementation and enforcement of this subpart is delegated to a State, local, or tribal agency.

(b) In delegating implementation and enforcement authority of this subpart to a State, local, or tribal agency under subpart E of this part, the authorities contained in paragraph (c) of this section are retained by the Administrator of U.S. EPA and cannot be transferred to the State, local, or tribal agency.

(c) The authorities that cannot be delegated to State, local, or tribal agencies are as specified in paragraphs (c)(1) through (4) of this section.

(1) Approval of alternatives to the requirements in §§ 63.400 and 63.402–63.403.

(2) Approval of major alternatives to test methods under § 63.7(e)(2)(ii) and (f), as defined in § 63.90, and as required in this subpart.

(3) Approval of major alternatives to monitoring under § 63.8(f), as defined in § 63.90, and as required in this subpart.

(4) Approval of major alternatives to recordkeeping and reporting under § 63.10(f), as defined in § 63.90, and as required in this subpart.

Subpart R—[Amended]

14. Section 63.429 is revised to read as follows:

§ 63.429 Implementation and enforcement.

(a) This subpart can be implemented and enforced by the U.S. EPA, or a delegated authority such as the applicable State, local, or tribal agency. If the U.S. EPA Administrator has delegated authority to a State, local, or tribal agency, then that agency, in addition to the U.S. EPA, has the authority to implement and enforce this subpart. Contact the applicable U.S. EPA Regional Office to find out if implementation and enforcement of this subpart is delegated to a State, local, or tribal agency.

(b) In delegating implementation and enforcement authority of this subpart to a State, local, or Tribal agency under subpart E of this part, the authorities contained in paragraph (c) of this section are retained by the Administrator of U.S. EPA and cannot be transferred to the State, local, or Tribal agency.

(c) The authorities that cannot be delegated to State, local, or tribal agencies are as specified in paragraphs (c)(1) through (4) of this section.

(1) Approval of alternatives to the requirements in §§ 63.420 and 63.422 through 63.424. Any owner or operator requesting to use an alternative means of emission limitation for storage vessels covered by § 63.423 must follow the procedures in § 63.426.

(2) Approval of major alternatives to test methods under § 63.7(e)(2)(ii) and (f), as defined in § 63.90, and as required in this subpart.

(3) Approval of major alternatives to monitoring under § 63.8(f), as defined in § 63.90, and as required in this subpart, and any alternatives to § 63.427(a)(1) through (4) per § 63.427(a)(5).

(4) Approval of major alternatives to recordkeeping and reporting under § 63.10(f), as defined in § 63.90, and as required in this subpart.

Subpart S—[Amended]

15. Section 63.450 is amended by revising paragraph (d)(1) to read as follows:

§ 63.450 Standards for enclosures and closed-vent systems.

* * * * *

(d) * * *

(1) On each bypass line, the owner or operator shall install, calibrate, maintain, and operate according to the manufacturer's specifications a flow indicator that is capable of taking periodic readings as frequently as specified in § 63.454(e). The flow indicator shall be installed in the bypass line in such a way as to indicate flow in the bypass line; or

* * * * *

16. Section 63.454 is amended by revising paragraph (e) to read as follows:

§ 63.454 Recordkeeping requirements.

* * * * *

(e) The owner or operator shall set the flow indicator on each bypass line specified in § 63.450(d)(1) to provide a record of the presence of gas stream flow in the bypass line at least once every 15 minutes.

* * * * *

17. Section 63.458 is revised to read as follows:

§ 63.458 Implementation and enforcement.

(a) This subpart can be implemented and enforced by the U.S. EPA, or a delegated authority such as the applicable State, local, or tribal agency. If the U.S. EPA Administrator has delegated authority to a State, local, or tribal agency, then that agency, in addition to the U.S. EPA, has the authority to implement and enforce this subpart. Contact the applicable U.S. EPA Regional Office to find out if this subpart is delegated to a State, local, or tribal agency.

(b) In delegating implementation and enforcement authority of this subpart to a State, local, or tribal agency under subpart E of this part, the authorities contained in paragraph (c) of this section are retained by the Administrator of U.S. EPA and cannot be transferred to the State, local, or tribal agency.

(c) The authorities that cannot be delegated to State, local, or tribal agencies are as specified in paragraphs (c)(1) through (4) of this section.

(1) Approval of alternatives to the requirements in §§ 63.440, 63.443 through 63.447 and 63.450. Where these standards reference another subpart, the cited provisions will be delegated according to the delegation provisions of the referenced subpart.

(2) Approval of alternatives to using §§ 63.457(b)(5)(iii), 63.457(c)(3)(ii) and (iii), and 63.257(c)(5)(ii), and any major alternatives to test methods under § 63.7(e)(2)(ii) and (f), as defined in § 63.90, and as required in this subpart.

(3) Approval of alternatives using § 64.453(m) and any major alternatives to monitoring under § 63.8(f), as defined in § 63.90, and as required in this subpart.

(4) Approval of major alternatives to recordkeeping and reporting under § 63.10(f), as defined in § 63.90, and as required in this subpart.

Subpart T—[Amended]

18. Section 63.460 is amended by removing and reserving paragraph (f).

19. Section 63.462 is amended by adding paragraph (e) to read as follows:

§ 63.462 Batch cold cleaning machine standards.

* * * * *

(e) Each owner or operator subject to the requirements of paragraph (c)(1) through (8) of this section may request to use measures other than those described in these paragraphs. The owner or operator must demonstrate to the Administrator (or delegated State, local, or Tribal authority) that the alternative measures will result in equivalent or better emissions control compared to the measures described in paragraphs (c)(1) through (8) of this section. For example, storing solvent and solvent-laden materials in an enclosed area that is ventilated to a solvent recovery or destruction device may be considered an acceptable alternative.

20. Section 63.463 is amended by revising paragraph (e)(2)(ix)(B) to read as follows:

§ 63.463 Batch vapor and in-line cleaning machine standards.

* * * * *

(e) * * *

(2) * * *

(ix) * * *

(B) Conduct the weekly monitoring required by § 63.466(a)(3). Record the results required by § 63.467(a)(6).

* * * * *

21. Section 63.467 is amended by revising paragraph (a)(6) to read as follows:

§ 63.467 Recordkeeping requirements.

(a) * * *

(6) If a squeegee system is used to comply with these standards, records of the test required by § 63.466(f) to determine the maximum product throughput for the squeegees and records of both the weekly monitoring required by § 63.466(a)(3) for visual inspection and the length of continuous web product cleaned during the previous week.

* * * * *

22. Section 63.470 is added to Subpart T to read as follows:

§ 63.470 Implementation and enforcement.

(a) This subpart can be implemented and enforced by the U.S. EPA, or a delegated authority such as the applicable State, local, or tribal agency. If the U.S. EPA Administrator has delegated authority to a State, local, or tribal agency, then that agency, in addition to the U.S. EPA, has the authority to implement and enforce this subpart. Contact the applicable U.S. EPA Regional Office to find out if implementation and enforcement of this subpart is delegated to a State, local, or tribal agency.

(b) In delegating implementation and enforcement authority of this subpart to a State, local, or tribal agency under subpart E of this part, the authorities contained in paragraph (c) of this section are retained by the Administrator of U.S. EPA and cannot be transferred to the State, local, or tribal agency.

(c) The authorities that cannot be delegated to State, local, or tribal agencies are as specified in paragraphs (c)(1) through (4) of this section.

(1) Approval of alternatives to the requirements in §§ 63.460, 63.462(a) through (d), and 63.463 and 63.464. Use the procedures in § 63.469 to request the use of alternative equipment or procedures, and use the procedures in § 63.463(d)(9) to request alternative maintenance practices.

(2) Approval of major alternatives to test methods under § 63.7(e)(2)(ii) and (f), as defined in § 63.90, and as required in this subpart.

(3) Approval of major alternatives to monitoring under § 63.8(f), as defined in § 63.90, and as required in this subpart.

(4) Approval of major alternatives to recordkeeping and reporting under § 63.10(f), as defined in § 63.90, and as required in this subpart.

Subpart U—[Amended]

23. Section 63.507 is added to Subpart U to read as follows:

§ 63.507 Implementation and enforcement.

(a) This subpart can be implemented and enforced by the U.S. EPA, or a delegated authority such as the applicable State, local, or tribal agency. If the U.S. EPA Administrator has delegated authority to a State, local, or tribal agency, then that agency, in addition to the U.S. EPA, has the authority to implement and enforce this subpart. Contact the applicable U.S. EPA Regional Office to find out if this subpart is delegated to a State, local, or tribal agency.

(b) In delegating implementation and enforcement authority of this subpart to

a State, local, or tribal agency under subpart E of this part, the authorities contained in paragraph (c) of this section are retained by the Administrator of U.S. EPA and cannot be transferred to the State, local, or tribal agency.

(c) The authorities that cannot be delegated to State, local, or tribal agencies are as specified in paragraphs (c)(1) through (4) of this section.

(1) Approval of alternatives to the requirements in §§ 63.480 and 63.481, 63.483(a) through (c), 63.484, 63.485(a) through (k), (m) through (s),(u), 63.486 and 63.487, 63.488(a), (b)(1) through (4), (b)(5)(iv) and (v), (b)(6) and (7), (c) through (i), 63.493 and 63.494, 63.500(a)(1) through (3), (b), 63.501, 63.502(a) through (f), (i), (k) through (m), and 63.503. Where these standards reference another subpart, the cited provisions will be delegated according to the delegation provisions of the referenced subpart. Where these standards reference another subpart and modify the requirements, the requirements shall be modified as described in this subpart. Delegation of the modified requirements will also occur according to the delegation provisions of the referenced subpart.

(2) Approval of major alternatives to test methods under § 63.7(e)(2)(ii) and (f), as defined in § 63.90, and as required in this subpart.

(3) Approval of major alternatives to monitoring under § 63.8(f), as defined in § 63.90, and as required in this subpart.

(4) Approval of major alternatives to recordkeeping and reporting under § 63.10(f), as defined in § 63.90, and as required in this subpart.

Subpart W—[Amended]

24. Section 63.529 is added to Subpart W to read as follows:

§ 63.529 Implementation and enforcement.

(a) This subpart can be implemented and enforced by the U.S. EPA, or a delegated authority such as the applicable State, local, or tribal agency. If the U.S. EPA Administrator has delegated authority to a State, local, or tribal agency, then that agency, in addition to the U.S. EPA, has the authority to implement and enforce this subpart. Contact the applicable U.S. EPA Regional Office to find out if implementation and enforcement of this subpart is delegated to a State, local, or tribal agency.

(b) In delegating implementation and enforcement authority of this subpart to a State, local, or tribal agency under subpart E of this part, the authorities contained in paragraph (c) of this section are retained by the Administrator of U.S. EPA and cannot be transferred to the State, local, or tribal agency.

(c) The authorities that cannot be delegated to State, local, or tribal agencies are as specified in paragraphs (c)(1) through (4) of this section.

(1) Approval of alternatives to the requirements in §§ 63.520, 63.523, and 63.524. Where these standards reference another rule, the cited provisions in that rule will be delegated according to the delegation provisions of that rule.

(2) Approval of major alternatives to test methods for under § 63.7(e)(2)(ii) and (f), as defined in § 63.90, and as required in this subpart.

(3) Approval of major alternatives to monitoring under § 63.8(f), as defined in § 63.90, and as required in this subpart.

(4) Approval of major alternatives to recordkeeping and reporting under § 63.10(f), as defined in § 63.90, and as required in this subpart.

Subpart X—[Amended]

25. Section 63.545 is amended by revising paragraph (c) introductory text and adding paragraph (f) to read as follows:

§ 63.545 Standards for fugitive dust sources.

* * * * *

(c) The controls specified in the standard operating procedures manual shall at a minimum include the requirements of paragraphs (c)(1) through (c)(5) of this section, unless the owner or operator satisfies the requirements in paragraph (f) of this section.

* * * * *

(f) Demonstrate to the Administrator (or delegated State, local, or Tribal authority) that an alternative measure(s) is equivalent or better than a practice(s) described in paragraphs (c)(1) through (c)(5) of this section.

26. Section 63.551 is added to Subpart X to read as follows:

§ 63.551 Implementation and enforcement.

(a) This subpart can be implemented and enforced by the U.S. EPA, or a delegated authority such as the applicable State, local, or tribal agency. If the U.S. EPA Administrator has delegated authority to a State, local, or tribal agency, then that agency, in addition to the U.S. EPA, has the authority to implement and enforce this subpart. Contact the applicable U.S. EPA Regional Office to find out if this subpart is delegated to a State, local, or tribal agency.

(b) In delegating implementation and enforcement authority of this subpart to a State, local, or tribal agency under subpart E of this part, the authorities contained in paragraph (c) of this section are retained by the Administrator of U.S. EPA and cannot be transferred to the State, local, or tribal agency.

(c) The authorities that cannot be delegated to State, local, or tribal agencies are as specified in paragraphs (c)(1) through (4) of this section.

(1) Approval of alternatives to the requirements in §§ 63.541 and 63.543 through 63.545(a) through (e).

(2) Approval of major alternatives to test methods for under § 63.7(e)(2)(ii) and (f), as defined in § 63.90, and as required in this subpart.

(3) Approval of major alternatives to monitoring under § 63.8(f), as defined in § 63.90, and as required in this subpart.

(4) Approval of major alternatives to recordkeeping and reporting under § 63.10(f), as defined in § 63.90, and as required in this subpart.

Subpart Y—[Amended]

27. Section 63.562 is amended by removing paragraph (d)(3).

28. Section 63.567 is amended by adding paragraph (l) to read as follows:

§ 63.567 Recordkeeping and reporting requirements.

* * * * *

(l) The owner or operator of the VMT source required by § 63.562(d)(2)(iv) to develop a program, shall submit annual reports on or before January 31 of each year to the Administrator certifying the annual average daily loading rate for the previous calendar year. Beginning on January 31, 1996, for the reported year 1995, the annual report shall specify the annual average daily loading rate over all loading berths. Beginning on January 31, 1999, for the reported year 1998, the annual report shall specify the annual average daily loading rate over all loading berths, over each loading berth equipped with a vapor collection system and control device, and over each loading berth not equipped with a vapor collection system and control device. The annual average daily loading rate under this section is calculated as the total amount of crude oil loaded during the calendar year divided by 365 days or 366 days, as appropriate.

29. Section 63.568 is added to Subpart Y to read as follows:

§ 63.568 Implementation and enforcement.

(a) This subpart can be implemented and enforced by the U.S. EPA, or a delegated authority such as the applicable State, local, or tribal agency. If the U.S. EPA Administrator has delegated authority to a State, local, or

tribal agency, then that agency, in addition to the U.S. EPA, has the authority to implement and enforce this subpart. Contact the applicable U.S. EPA Regional Office to find out if implementation and enforcement of this subpart is delegated to a State, local, or tribal agency.

(b) In delegating implementation and enforcement authority of this subpart to a State, local, or tribal agency under subpart E of this part, the authorities contained in paragraph (c) of this section are retained by the Administrator of U.S. EPA and cannot be transferred to the State, local, or tribal agency.

(c) The authorities that cannot be delegated to State, local, or tribal agencies are as specified in paragraphs (c)(1) through (4) of this section.

(1) Approval of alternatives to the requirements in §§ 63.560 and 63.562(a) through (d).

(2) Approval of major alternatives to test methods for under § 63.7(e)(2)(ii) and (f), as defined in § 63.90, and as required in this subpart.

(3) Approval of major alternatives to monitoring under § 63.8(f), as defined in § 63.90, and as required in this subpart.

(4) Approval of major alternatives to recordkeeping and reporting under § 63.10(f), as defined in § 63.90, and as required in this subpart.

Subpart AA—[Amended]

30. Section 63.611 is added to Subpart AA to read as follows:

§ 63.611 Implementation and enforcement.

(a) This subpart can be implemented and enforced by the U.S. EPA, or a delegated authority such as the applicable State, local, or tribal agency. If the U.S. EPA Administrator has delegated authority to a State, local, or tribal agency, then that agency, in addition to the U.S. EPA, has the authority to implement and enforce this subpart. Contact the applicable U.S. EPA Regional Office to find out if implementation and enforcement of this subpart is delegated to a State, local, or tribal agency.

(b) In delegating implementation and enforcement authority of this subpart to a State, local, or tribal agency under subpart E of this part, the authorities contained in paragraph (c) of this section are retained by the Administrator of U.S. EPA and cannot be transferred to the State, local, or tribal agency.

(c) The authorities that cannot be delegated to State, local, or tribal agencies are as specified in paragraphs (c)(1) through (4) of this section.

(1) Approval of alternatives to the requirements in §§ 63.600, 63.602 through 63.604, and 63.609 and 63.610.

(2) Approval of major alternatives to test methods under § 63.7(e)(2)(ii) and (f), as defined in § 63.90, and as required in this subpart.

(3) Approval of major alternatives to monitoring under § 63.8(f), as defined in § 63.90, and as required in this subpart.

(4) Approval of major alternatives to recordkeeping and reporting under § 63.10(f), as defined in § 63.90, and as required in this subpart.

Subpart BB—[Amended]

31. Section 63.632 is added to Subpart BB to read as follows:

§ 63.632 Implementation and enforcement.

(a) This subpart can be implemented and enforced by the U.S. EPA, or a delegated authority such as the applicable State, local, or tribal agency. If the U.S. EPA Administrator has delegated authority to a State, local, or tribal agency, then that agency, in addition to the U.S. EPA, has the authority to implement and enforce this subpart. Contact the applicable U.S. EPA Regional Office to find out if implementation and enforcement of this subpart is delegated to a State, local, or tribal agency.

(b) In delegating implementation and enforcement authority of this subpart to a State, local, or tribal agency under subpart E of this part, the authorities contained in paragraph (c) of this section are retained by the Administrator of U.S. EPA and cannot be transferred to the State, local, or tribal agency.

(c) The authorities that cannot be delegated to State, local, or tribal agencies are as specified in paragraphs (c)(1) through (4) of this section.

(1) Approval of alternatives to the requirements in §§ 63.620, 63.622 through 63.624, and 63.629 through 63.631.

(2) Approval of major alternatives to test methods under § 63.7(e)(2)(ii) and (f), as defined in § 63.90, and as required in this subpart.

(3) Approval of major alternatives to monitoring under § 63.8(f), as defined in § 63.90, and as required in this subpart.

(4) Approval of major alternatives to recordkeeping and reporting under § 63.10(f), as defined in § 63.90, and as required in this subpart.

Subpart CC—[Amended]

32. Section 63.655 is added to Subpart CC to read as follows:

§ 63.655 Implementation and enforcement.

(a) This subpart can be implemented and enforced by the U.S. EPA, or a delegated authority such as the applicable State, local, or tribal agency. If the U.S. EPA Administrator has delegated authority to a State, local, or tribal agency, then that agency, in addition to the U.S. EPA, has the authority to implement and enforce this subpart. Contact the applicable U.S. EPA Regional Office to find out if implementation and enforcement of this subpart is delegated to a State, local, or tribal agency.

(b) In delegating implementation and enforcement authority of this subpart to a State, local, or tribal agency under subpart E of this part, the authorities contained in paragraph (c) of this section are retained by the Administrator of U.S. EPA and cannot be transferred to the State, local, or tribal agency.

(c) The authorities that cannot be delegated to State, local, or tribal agencies are as specified in paragraphs (c)(1) through (4) of this section.

(1) Approval of alternatives to the requirements in §§ 63.640, 63.642(g) through (l), 63.643, 63.646 through 63.648, and 63.649 through 63.652. Where these standards reference another subpart, the cited provisions will be delegated according to the delegation provisions of the referenced subpart. Where these standards reference another subpart and modify the requirements, the requirements shall be modified as described in this subpart. Delegation of the modified requirements will also occur according to the delegation provisions of the referenced subpart.

(2) Approval of major alternatives to test methods under § 63.7(e)(2)(ii) and (f), as defined in § 63.90, and as required in this subpart.

(3) Approval of major alternatives to monitoring under § 63.8(f), as defined in § 63.90, and as required in this subpart.

(4) Approval of major alternatives to recordkeeping and reporting under § 63.10(f), as defined in § 63.90, and as required in this subpart.

Subpart DD—[Amended]

33. Section 63.684 is amended by revising paragraph (e)(1) to read as follows:

§ 63.684 Standards: Off-Site material treatment.

* * * * *

(e) * * *

(1) A continuous monitoring system shall be installed and operated for each treatment that measures operating parameters appropriate for the treatment

process technology. This system shall include a continuous recorder that records the measured values of the selected operating parameters. The monitoring equipment shall be installed, calibrated, and maintained in accordance with the equipment manufacturer's specifications. The continuous recorder shall be a data recording device that is capable of recording either an instantaneous data value at least once every 15 minutes or an average value for intervals of 15 minutes or less.

* * * * *

34. Section 63.693 is amended by revising paragraphs (b)(4)(i) and (c)(2)(ii) to read as follows:

§ 63.693 Standards: closed-vent systems and control devices.

* * * * *

(b) * * *

(4) * * *

(i) A continuous monitoring system shall be installed and operated for each control device that measures operating parameters appropriate for the control device technology as specified in paragraphs (d) through (h) of this section. This system shall include a continuous recorder that records the measured values of the selected operating parameters. The monitoring equipment shall be installed, calibrated, and maintained in accordance with the equipment manufacturer's specifications. The continuous recorder shall be a data recording device that is capable of recording either an instantaneous data value at least once every 15 minutes or an average value for intervals of 15 minutes or less.

* * * * *

(c) * * *

(2) * * *

(ii) If a seal or locking device is used to comply with paragraph (c)(2) of this section, the device shall be placed on the mechanism by which the bypass device position is controlled (e.g., valve handle, damper lever) when the bypass device is in the closed position such that the bypass device cannot be opened without breaking the seal or removing the lock. Examples of such devices include, but are not limited to, a car-seal or a lock-and-key configuration valve.

* * * * *

35. Section 63.695 is amended by revising paragraphs (a)(4), adding paragraphs (c)(1)(ii)(C) and (D), and revising paragraph (e) introductory text to read as follows:

§ 63.695 Inspection and monitoring requirements.

* * * * *

(a) * * *

(4) To monitor and record off-site material treatment processes for compliance with the standards specified in 63.684(e), the monitoring procedures are specified in paragraph (e) of this section.

* * * * *

(c) * * *

(1) * * *

(ii) * * *

(C) The continuous monitoring system required by § 63.693(b)(4)(i) shall monitor and record either an instantaneous data value at least once very 15 minutes or an average value for intervals of 15 minutes or less.

(D) The owner or operator shall visually inspect the seal or closure mechanism required by § 63.693(c)(2)(ii) at least once every month to verify that the bypass mechanism is maintained in the closed position.

* * * * *

(e) The continuous monitoring system required by § 63.684(e)(1) shall monitor and record either an instantaneous data value at least once very 15 minutes or an average value for intervals of 15 minutes or less.

* * * * *

36. Section 63.698 is revised to read as follows:

§ 63.698 Implementation and enforcement.

(a) This subpart can be implemented and enforced by the U.S. EPA, or a delegated authority such as the applicable State, local, or tribal agency. If the U.S. EPA Administrator has delegated authority to a State, local, or tribal agency, then that agency, in addition to the U.S. EPA, has the authority to implement and enforce this subpart. Contact the applicable U.S. EPA Regional Office to find out if this subpart is delegated to a State, local, or tribal agency.

(b) In delegating implementation and enforcement authority of this subpart to a State, local, or tribal agency under subpart E of this part, the authorities contained in paragraph (c) of this section are retained by the Administrator of U.S. EPA and cannot be transferred to the State, local, or tribal agency.

(c) The authorities that cannot be delegated to State, local, or tribal agencies are as specified in paragraphs (c)(1) through (4) of this section.

(1) Approval of alternatives to the requirements in §§ 63.680, 63.684 through 63.691, and 63.693. Where these standards reference another subpart, the cited provisions will be delegated according to the delegation provisions of the referenced subpart.

(2) Approval of major alternatives to test methods under § 63.7(e)(2)(ii) and (f), as defined in § 63.90, and as required in this subpart.

(3) Approval of major alternatives to monitoring under § 63.8(f), as defined in § 63.90, and as required in this subpart.

(4) Approval of major alternatives to recordkeeping and reporting under § 63.10(f), as defined in § 63.90, and as required in this subpart.

Subpart EE—[Amended]

37. Section 63.708 is revised to read as follows:

§ 63.708 Implementation and enforcement.

(a) This subpart can be implemented and enforced by the U.S. EPA, or a delegated authority such as the applicable State, local, or tribal agency. If the U.S. EPA Administrator has delegated authority to a State, local, or tribal agency, then that agency, in addition to the U.S. EPA, has the authority to implement and enforce this subpart. Contact the applicable U.S. EPA Regional Office to find out if implementation and enforcement of this subpart is delegated to a State, local, or tribal agency.

(b) In delegating implementation and enforcement authority of this subpart to a State, local, or tribal agency under subpart E of this part, the authorities contained in paragraph (c) of this section are retained by the Administrator of U.S. EPA and cannot be transferred to the State, local, or tribal agency.

(c) The authorities that cannot be delegated to State, local, or tribal agencies are as specified in paragraphs (c)(1) through (4) of this section.

(1) Approval of alternatives to the requirements in §§ 63.701 and 63.703.

(2) Approval of major alternatives to test methods under § 63.7(e)(2)(ii) and (f), as defined in § 63.90, and as required in this subpart.

(3) Approval of major alternatives to monitoring under § 63.8(f), as defined in § 63.90, and as required in this subpart.

(4) Approval of major alternatives to recordkeeping and reporting under § 63.10(f), as defined in § 63.90, and as required in this subpart.

Subpart GG—[Amended]

38. Section 63.744 is amended:

a. By revising the first sentence of paragraph (a)(1).

b. By revising paragraph (a)(2).

c. Adding paragraph (a)(4).

The revisions and addition read as follows:

§ 63.744 Standards: Cleaning operations.

(a) * * *

(1) Unless the owner or operator satisfies the requirements in paragraph

(a)(4) of this section, place used solvent-laden cloth, paper, or any other absorbent applicators used for cleaning in bags or other closed containers.

* * *

(2) Unless the owner or operator satisfies the requirements in paragraph (a)(4) of this section, store fresh and spent cleaning solvents, except semi-aqueous solvent cleaners, used in aerospace cleaning operations in closed containers.

* * * * *

(4) Demonstrate to the Administrator (or delegated State, local, or tribal authority) that equivalent or better alternative measures are in place compared to the use of closed containers for the solvent-laden materials described in paragraph (a)(1) of this section, or the storage of solvents described in paragraph (a)(2) of this section.

* * * * *

39. Section 63.759 is added to Subpart GG to read as follows:

§ 63.759 Implementation and enforcement.

(a) This subpart can be implemented and enforced by the U.S. EPA, or a delegated authority such as the applicable State, local, or tribal agency. If the U.S. EPA Administrator has delegated authority to a State, local, or tribal agency, then that agency, in addition to the U.S. EPA, has the authority to implement and enforce this subpart. Contact the applicable U.S. EPA Regional Office to find out if implementation and enforcement of this subpart is delegated to a State, local, or tribal agency.

(b) In delegating implementation and enforcement authority of this subpart to a State, local, or tribal agency under subpart E of this part, the authorities contained in paragraph (c) of this section are retained by the Administrator of U.S. EPA and cannot be transferred to the State, local, or tribal agency.

(c) The authorities that cannot be delegated to State, local, or tribal agencies are as specified in paragraphs (c)(1) through (4) of this section.

(1) Approval of alternatives to the requirements in §§ 63.741, 63.743, 63.744(a)(3), (b) through (e), 63.745 through 63.748, and 63.649(a).

(2) Approval of major alternatives to test methods under § 63.7(e)(2)(ii) and (f), as defined in § 63.90, and as required in this subpart.

(3) Approval of major alternatives to monitoring under § 63.8(f), as defined in § 63.90, and as required in this subpart.

(4) Approval of major alternatives to recordkeeping and reporting under § 63.10(f), as defined in § 63.90, and as required in this subpart.

Subpart HH—[Amended]

40. Section 63.771 is amended by revising paragraphs (c)(3)(i)(A) and (B).

§ 63.771 Control equipment requirements.

* * * * *

(c) * * *

(3) * * *

(i) * * *

(A) At the inlet to the bypass device that could divert the stream away from the control device to the atmosphere, properly install, calibrate, maintain, and operate a flow indicator that is capable of taking periodic readings and sounding an alarm when the bypass device is open such that the stream is being, or could be, diverted away from the control device to the atmosphere; or

(B) Secure the bypass device valve installed at the inlet to the bypass device in the non-diverting position using a car-seal or a lock-and-key type configuration.

* * * * *

41. Section 63.773 is amended by revising paragraph (c)(2) introductory text and adding paragraph (c)(2)(iv) to read as follows:

§ 63.773 Inspection and monitoring requirements.

* * * * *

(c) * * *

(2) Except as provided in paragraphs (c)(5) and (6) of this section, each closed-vent system shall be inspected according to the procedures and schedule specified in paragraphs (c)(2)(i) and (ii) of this section, each cover shall be inspected according to the procedures and schedule specified in paragraph (c)(2)(iii) of this section, and each bypass device shall be inspected according to the procedures of (c)(2)(iv) of this section.

* * * * *

(iv) For each bypass device, except as provided for in § 63.771(c)(3)(ii), the owner or operator shall either:

(A) At the inlet to the bypass device that could divert the steam away from the control device to the atmosphere, set the flow indicator to take a reading at least once every 15 minutes; or

(B) If the bypass device valve installed at the inlet to the bypass device is secured in the non-diverting position using a car-seal or a lock-and-key type configuration, visually inspect the seal or closure mechanism at least once every month to verify that the valve is maintained in the non-diverting position and the vent stream is not diverted through the bypass device.

* * * * *

42. Section 63.776 is revised to read as follows:

§ 63.776 Implementation and enforcement.

(a) This subpart can be implemented and enforced by the U.S. EPA, or a delegated authority such as the applicable State, local, or tribal agency. If the U.S. EPA Administrator has delegated authority to a State, local, or tribal agency, then that agency, in addition to the U.S. EPA, has the authority to implement and enforce this subpart. Contact the applicable U.S. EPA Regional Office to find out if this subpart is delegated to a State, local, or tribal agency.

(b) In delegating implementation and enforcement authority of this subpart to a State, local, or tribal agency under subpart E of this part, the authorities contained in paragraph (c) of this section are retained by the Administrator of U.S. EPA and cannot be transferred to the State, local, or tribal agency.

(c) The authorities that cannot be delegated to State, local, or tribal agencies are as specified in paragraphs (c)(1) through (4) of this section.

(1) Approval of alternatives to the requirements in §§ 63.760, 63.765, 63.766, 63.769, 63.771, and 63.777.

(2) Approval of major alternatives to test methods under § 63.7(e)(2)(ii) and (f), as defined in § 63.90, and as required in this subpart.

(3) Approval of major alternatives to monitoring under § 63.8(f), as defined in § 63.90, and as required in this subpart.

(4) Approval of major alternatives to recordkeeping and reporting under § 63.10(f), as defined in § 63.90, and as required in this subpart.

Subpart II—[Amended]

43. Section 63.789 is added to Subpart II to read as follows:

§ 63.789 Implementation and enforcement.

(a) This subpart can be implemented and enforced by the U.S. EPA, or a delegated authority such as the applicable State, local, or tribal agency. If the U.S. EPA Administrator has delegated authority to a State, local, or tribal agency, then that agency, in addition to the U.S. EPA, has the authority to implement and enforce this subpart. Contact the applicable U.S. EPA Regional Office to find out if implementation and enforcement of this subpart is delegated to a State, local, or tribal agency.

(b) In delegating implementation and enforcement authority of this subpart to a State, local, or tribal agency under subpart E of this part, the authorities contained in paragraph (c) of this

section are retained by the Administrator of U.S. EPA and cannot be transferred to the State, local, or tribal agency.

(c) The authorities that cannot be delegated to State, local, or tribal agencies are as specified in paragraphs (c)(1) through (4) of this section.

(1) Approval of alternatives to the requirements in §§ 63.780 and 63.781, and 63.783 and 63.784.

(2) Approval of major alternatives to test methods under § 63.7(e)(2)(ii) and (f), as defined in § 63.90, and as required in this subpart.

(3) Approval of major alternatives to monitoring under § 63.8(f), as defined in § 63.90, and as required in this subpart.

(4) Approval of major alternatives to recordkeeping and reporting under § 63.10(f), as defined in § 63.90, and as required in this subpart.

Subpart JJ—[Amended]

44. Section 63.803 is amended by revising paragraph (c) introductory text, paragraphs (c)(1) through (3), and paragraphs (c)(4) introductory text to read as follows:

§ 63.803 Work practice standards.

* * * * *

(c) Each owner or operator of an affected source shall prepare and maintain with the work practice implementation plan a written leak inspection and maintenance plan that specifies:

(1) A minimum visual inspection frequency of once per month for all equipment used to transfer or apply coating, adhesives, or organic solvents;

(2) An inspection schedule;

(3) Methods for documenting the data and results of each inspection and any repairs that were made;

(4) The time frame between identifying the leak and making the repair, which adheres, at a minimum, to the following schedule:

* * * * *

45. Section 63.808 is revised to read as follows:

§ 63.808 Implementation and enforcement.

(a) This subpart can be implemented and enforced by the U.S. EPA, or a delegated authority such as the applicable State, local, or tribal agency. If the U.S. EPA Administrator has delegated authority to a State, local, or tribal agency, then that agency, in addition to the U.S. EPA, has the authority to implement and enforce this subpart. Contact the applicable U.S. EPA Regional Office to find out if implementation and enforcement of this subpart is delegated to a State, local, or tribal agency.

(b) In delegating implementation and enforcement authority of this subpart to a State, local, or tribal agency under subpart E of this part, the authorities contained in paragraph (c) of this section are retained by the Administrator of U.S. EPA and cannot be transferred to the State, local, or tribal agency.

(c) The authorities that cannot be delegated to State, local, or tribal agencies are as specified in paragraphs (c)(1) through (5) of this section.

(1) Approval of alternatives to the requirements in §§ 63.800, 63.802, and 63.803 (a) and (b), (c)(1), and (d) through (l).

(2) Approval of alternatives to the monitoring and compliance requirements in §§ 63.804(f)(4)(iv)(D) and (E), 63.804(g)(4)(iii)(C), 63.804(g)(4)(vi), and 63.804(g)(6)(vi).

(3) Approval of major alternatives to test methods under § 63.7(e)(2)(ii) and (f), as defined in § 63.90, and as required in this subpart, as well as approval of any alternatives to the specific test methods under §§ 63.805(a), 63.805(d)(2)(v), and 63.805(e)(1).

(4) Approval of major alternatives to monitoring under § 63.8(f), as defined in § 63.90, and as required in this subpart.

(5) Approval of major alternatives to recordkeeping and reporting under § 63.10(f), as defined in § 63.90, and as required in this subpart.

Subpart KK—[Amended]

46. Section 63.831 is revised to read as follows:

§ 63.831 Implementation and enforcement.

(a) This subpart can be implemented and enforced by the U.S. EPA, or a delegated authority such as the applicable State, local, or tribal agency. If the U.S. EPA Administrator has delegated authority to a State, local, or tribal agency, then that agency, in addition to the U.S. EPA, has the authority to implement and enforce this subpart. Contact the applicable U.S. EPA Regional Office to find out if this subpart is delegated to a State, local, or tribal agency.

(b) In delegating implementation and enforcement authority of this subpart to a State, local, or tribal agency under subpart E of this part, the authorities contained in paragraph (c) of this section are retained by the Administrator of U.S. EPA and cannot be transferred to the State, local, or tribal agency.

(c) The authorities that cannot be delegated to State, local, or tribal agencies are as specified in paragraphs (c)(1) through (4) of this section.

(1) Approval of alternatives to the requirements in §§ 63.820 and 63.821 and 63.824 through 63.826.

(2) Approval of alternatives to the test method for organic HAP content determination in § 63.827(b) and alternatives to the test method for volatile matter in § 63.827(c), and major alternatives to other test methods under § 63.7(e)(2)(ii) and (f), as defined in § 63.90, and as required in this subpart.

(3) Approval of major alternatives to monitoring under § 63.8(f), as defined in § 63.90, and as required in this subpart.

(4) Approval of major alternatives to recordkeeping and reporting under § 63.10(f), as defined in § 63.90, and as required in this subpart.

Subpart LL—[Amended]

47. Section 63.853 is revised to read as follows:

§ 63.853 Implementation and enforcement.

(a) This subpart can be implemented and enforced by the U.S. EPA, or a delegated authority such as the applicable State, local, or tribal agency. If the U.S. EPA Administrator has delegated authority to a State, local, or tribal agency, then that agency, in addition to the U.S. EPA, has the authority to implement and enforce this regulation. Contact the applicable U.S. EPA Regional Office to find out if this subpart is delegated to a State, local, or tribal agency.

(b) In delegating implementation and enforcement authority of this subpart to a State, local, or tribal agency under subpart E of this part, the authorities contained in paragraph (c) of this section are retained by the Administrator of U.S. EPA and cannot be transferred to the State, local, or tribal agency.

(c) The authorities that cannot be delegated to State, local, or tribal agencies are as specified in paragraphs (c)(1) through (4) of this section.

(1) Approval of alternatives to the requirements in §§ 63.840, 63.843 and 63.844, 63.845(b) through (e), (h) and (i), and 63.846.

(2) Approval of major alternatives to test methods under § 63.7(e)(2)(ii) and (f), as defined in § 63.90, and as required in this subpart.

(3) Approval of major alternatives to monitoring under § 63.8(f), as defined in § 63.90, and as required in this subpart.

(4) Approval of major alternatives to recordkeeping and reporting under § 63.10(f), as defined in § 63.90, and as required in this subpart.

Subpart OO—[Amended]

48. Section 63.908 is added to Subpart OO to read as follows:

§ 63.908 Implementation and enforcement.

(a) This subpart can be implemented and enforced by the U.S. EPA, or a delegated authority such as the applicable State, local, or tribal agency. If the U.S. EPA Administrator has delegated authority to a State, local, or tribal agency, then that agency, in addition to the U.S. EPA, has the authority to implement and enforce this subpart. Contact the applicable U.S. EPA Regional Office to find out if this subpart is delegated to a State, local, or tribal agency.

(b) In delegating implementation and enforcement authority of this subpart to a State, local, or tribal agency under subpart E of this part, the authorities contained in paragraph (c) of this section are retained by the Administrator of U.S. EPA and cannot be transferred to the State, local, or tribal agency.

(c) The authorities that cannot be delegated to State, local, or tribal agencies are as specified in paragraphs (c)(1) through (4) of this section.

(1) Approval of alternatives to the requirements in §§ 63.900 and 63.902.

(2) Approval of major alternatives to test methods under § 63.7(e)(2)(ii) and (f), as defined in § 63.90, and as required in this subpart.

(3) Approval of major alternatives to monitoring under § 63.8(f), as defined in § 63.90, and as required in this subpart.

(4) Approval of major alternatives to recordkeeping and reporting under § 63.10(f), as defined in § 63.90, and as required in this subpart.

Subpart PP—[Amended]

49. Section 63.929 is added to Subpart PP to read as follows:

§ 63.929 Implementation and enforcement.

(a) This subpart can be implemented and enforced by the U.S. EPA, or a delegated authority such as the applicable State, local, or tribal agency. If the U.S. EPA Administrator has delegated authority to a State, local, or tribal agency, then that agency, in addition to the U.S. EPA, has the authority to implement and enforce this subpart. Contact the applicable U.S. EPA Regional Office to find out if this subpart is delegated to a State, local, or tribal agency.

(b) In delegating implementation and enforcement authority of this subpart to a State, local, or tribal agency under subpart E of this part, the authorities contained in paragraph (c) of this section are retained by the Administrator of U.S. EPA and cannot be transferred to the State, local, or tribal agency.

(c) The authorities that cannot be delegated to State, local, or tribal agencies are as specified in paragraphs (c)(1) through (4) of this section.

(1) Approval of alternatives to the requirements in §§ 63.920 and 63.922 through 63.924. Where these standards reference another subpart, the cited provisions will be delegated according to the delegation provisions of the referenced subpart.

(2) Approval of major alternatives to test methods under § 63.7(e)(2)(ii) and (f), as defined in § 63.90, and as required in this subpart.

(3) Approval of major alternatives to monitoring under § 63.8(f), as defined in § 63.90, and as required in this subpart.

(4) Approval of major alternatives to recordkeeping and reporting under § 63.10(f), as defined in § 63.90, and as required in this subpart.

Subpart QQ—[Amended]

50. Section 63.949 is added to Subpart QQ to read as follows:

§ 63.949 Implementation and enforcement.

(a) This subpart can be implemented and enforced by the U.S. EPA, or a delegated authority such as the applicable State, local, or tribal agency. If the U.S. EPA Administrator has delegated authority to a State, local, or tribal agency, then that agency, in addition to the U.S. EPA, has the authority to implement and enforce this subpart. Contact the applicable U.S. EPA Regional Office to find out if this subpart is delegated to a State, local, or tribal agency.

(b) In delegating implementation and enforcement authority of this subpart to a State, local, or tribal agency under subpart E of this part, the authorities contained in paragraph (c) of this section are retained by the Administrator of U.S. EPA and cannot be transferred to the State, local, or tribal agency.

(c) The authorities that cannot be delegated to State, local, or tribal agencies are as specified in paragraphs (c)(1) through (4) of this section.

(1) Approval of alternatives to the requirements in §§ 63.940, 63.942, and 63.943. Where these standards reference subpart DD, the cited provisions will be delegated according to the delegation provisions of subpart DD.

(2) Approval of major alternatives to test methods under § 63.7(e)(2)(ii) and (f), as defined in § 63.90, and as required in this subpart.

(3) Approval of major alternatives to monitoring under § 63.8(f), as defined in § 63.90, and as required in this subpart.

(4) Approval of major alternatives to recordkeeping and reporting under § 63.10(f), as defined in § 63.90, and as required in this subpart.

Subpart RR—[Amended]

51. Section 63.967 is added to Subpart RR to read as follows:

§ 63.967 Implementation and enforcement.

(a) This subpart can be implemented and enforced by the U.S. EPA, or a delegated authority such as the applicable State, local, or tribal agency. If the U.S. EPA Administrator has delegated authority to a State, local, or tribal agency, then that agency, in addition to the U.S. EPA, has the authority to implement and enforce this subpart. Contact the applicable U.S. EPA Regional Office to find out if this subpart is delegated to a State, local, or tribal agency.

(b) In delegating implementation and enforcement authority of this subpart to a State, local, or tribal agency under subpart E of this part, the authorities contained in paragraph (c) of this section are retained by the Administrator of U.S. EPA and cannot be transferred to the State, local, or tribal agency.

(c) The authorities that cannot be delegated to State, local, or tribal agencies are as specified in paragraphs (c)(1) through (4) of this section.

(1) Approval of alternatives to the requirements in §§ 63.960 and 63.962. Where these standards reference subpart DD, the cited provisions will be delegated according to the delegation provisions subpart DD of this part.

(2) Approval of major alternatives to test methods under § 63.7(e)(2)(ii) and (f), as defined in § 63.90, and as required in this subpart.

(3) Approval of major alternatives to monitoring under § 63.8(f), as defined in § 63.90, and as required in this subpart.

(4) Approval of major alternatives to recordkeeping and reporting under § 63.10(f), as defined in § 63.90, and as required in this subpart.

Subpart VV—[Amended]

52. Section 63.1050 is added to Subpart VV to read as follows:

§ 63.1050 Implementation and enforcement.

(a) This subpart can be implemented and enforced by the U.S. EPA, or a delegated authority such as the applicable State, local, or tribal agency. If the U.S. EPA Administrator has delegated authority to a State, local, or tribal agency, then that agency, in addition to the U.S. EPA, has the authority to implement and enforce this subpart. Contact the applicable U.S.

EPA Regional Office to find out if this subpart is delegated to a State, local, or tribal agency.

(b) In delegating implementation and enforcement authority of this subpart to a State, local, or tribal agency under subpart E of this part, the authorities contained in paragraph (c) of this section are retained by the Administrator of U.S. EPA and cannot be transferred to the State, local, or tribal agency.

(c) The authorities that cannot be delegated to State, local, or tribal agencies are as specified in paragraphs (c)(1) through (4) of this section.

(1) Approval of alternatives to the requirements in §§ 63.1040 and 63.1042 through 63.1044. Where these standards reference subpart DD, the cited provisions will be delegated according to the delegation provisions of subpart DD of this part.

(2) Approval of major alternatives to test methods under § 63.7(e)(2)(ii) and (f), as defined in § 63.90, and as required in this subpart.

(3) Approval of major alternatives to monitoring under § 63.8(f), as defined in § 63.90, and as required in this subpart.

(4) Approval of major alternatives to recordkeeping and reporting under § 63.10(f), as defined in § 63.90, and as required in this subpart.

Subpart CCC—[Amended]

53. Section 63.1166 is revised to read as follows:

§ 63.1166 Implementation and enforcement.

(a) This subpart can be implemented and enforced by the U.S. EPA, or a delegated authority such as the applicable State, local, or tribal agency. If the U.S. EPA Administrator has delegated authority to a State, local, or tribal agency, then that agency, in addition to the U.S. EPA, has the authority to implement and enforce this subpart. Contact the applicable U.S. EPA Regional Office to find out if implementation and enforcement of this subpart is delegated to a State, local, or tribal agency.

(b) In delegating implementation and enforcement authority of this subpart to a State, local, or tribal agency under subpart E of this part, the authorities contained in paragraph (c) of this section are retained by the Administrator of U.S. EPA and cannot be transferred to the State, local, or tribal agency.

(c) The authorities that cannot be delegated to State, local, or tribal agencies are as specified in paragraphs (c)(1) through (8) of this section.

(1) Approval of alternatives to the requirements in §§ 63.1155 and 63.1157 through 63.1159.

(2) Approval of major alternatives to test methods under § 63.7(e)(2)(ii) and (f), as defined in § 63.90, and as required in this subpart.

(3) Approval of any alternative measurement methods for HCl and CL2 to those specified in § 63.1161(d)(1).

(4) Approval of major alternatives to monitoring under § 63.8(f), as defined in § 63.90, and as required in this subpart.

(5) Approval of any alternative monitoring requirements to those specified in §§ 63.1162(a)(2) through (5) and 63.1162(b)(1) through (3).

(6) Approval of major alternatives to recordkeeping and reporting under § 63.10(f), as defined in § 63.90, and as required in this subpart.

(7) Waiver of recordkeeping requirements specified in § 63.1165.

(8) Approval of an alternative schedule for conducting performance tests to the requirement specified in § 63.1162(a)(1).

Subpart DDD—[Amended]

54. Section 63.1195 is revised to read as follows:

§ 63.1195 Who implements and enforces this subpart?

(a) This subpart can be implemented and enforced by the U.S. EPA, or a delegated authority such as the applicable State, local, or tribal agency. If the U.S. EPA Administrator has delegated authority to a State, local, or tribal agency, then that agency, in addition to the U.S. EPA, has the authority to implement and enforce this subpart. Contact the applicable U.S. EPA Regional Office to find out if implementation and enforcement of this subpart is delegated to a State, local, or tribal agency.

(b) In delegating implementation and enforcement authority of this subpart to a State, local, or tribal agency under subpart E of this part, the authorities contained in paragraph (c) of this section are retained by the Administrator of U.S. EPA and cannot be transferred to the State, local, or tribal agency.

(c) The authorities that cannot be delegated to State, local, or tribal agencies are as specified in paragraphs (c)(1) through (4) of this section.

(1) Approval of alternatives to the requirements in §§ 63.1177 through 63.1179.

(2) Approval of major alternatives to test methods under § 63.7(e)(2)(ii) and (f), as defined in § 63.90, and as required in this subpart.

(3) Approval of major alternatives to monitoring under § 63.8(f), as defined in § 63.90, and as required in this subpart.

(4) Approval of major alternatives to recordkeeping and reporting under § 63.10(f), as defined in § 63.90, and as required in this subpart.

Subpart EEE—[Amended]

55. Section 63.1214 is added to Subpart EEE to read as follows:

§ 63.1214 Implementation and enforcement.

(a) This subpart can be implemented and enforced by the U.S. EPA, or a delegated authority such as the applicable State, local, or tribal agency. If the U.S. EPA Administrator has delegated authority to a State, local, or tribal agency, then that agency, in addition to the U.S. EPA, has the authority to implement and enforce this subpart. Contact the applicable U.S. EPA Regional Office to find out if this subpart is delegated to a State, local, or tribal agency.

(b) In delegating implementation and enforcement authority of this subpart to a State, local, or tribal agency under subpart E of this part, the authorities contained in paragraph (c) of this section are retained by the Administrator of U.S. EPA and cannot be transferred to the State, local, or tribal agency.

(c) The authorities that cannot be delegated to State, local, or tribal agencies are as specified in paragraphs (c)(1) through (4) of this section.

(1) Approval of alternatives to requirements in §§ 63.1200 and 63.1203 through 63.1205.

(2) Approval of major alternatives to test methods under § 63.7(e)(2)(ii) and (f), as defined in § 63.90, and as required in this subpart.

(3) Approval of major alternatives to monitoring under § 63.8(f), as defined in § 63.90, and as required in this subpart.

(4) Approval of major alternatives to recordkeeping and reporting under § 63.10(f), as defined in § 63.90, and as required in this subpart.

Subpart GGG—[Amended]

56. Section 63.1261 is revised to read as follows:

§ 63.1261 Implementation and enforcement.

(a) This subpart can be implemented and enforced by the U.S. EPA, or a delegated authority such as the applicable State, local, or tribal agency. If the U.S. EPA Administrator has delegated authority to a State, local, or tribal agency, then that agency, in

addition to the U.S. EPA, has the authority to implement and enforce this subpart. Contact the applicable U.S. EPA Regional Office to find out if implementation and enforcement of this subpart is delegated to a State, local, or tribal agency.

(b) In delegating implementation and enforcement authority of this subpart to a State, local, or tribal agency under subpart E of this part, the authorities contained in paragraph (c) of this section are retained by the Administrator of U.S. EPA and cannot be transferred to the State, local, or tribal agency.

(c) The authorities that cannot be delegated to State, local, or tribal agencies are as specified in paragraphs (c)(1) through (4) of this section.

(1) Approval of alternatives to the requirements in §§ 63.1250 and 63.1252 through 63.1256. Where these standards reference another subpart, the cited provisions will be delegated according to the delegation provisions of the referenced subpart.

(2) Approval of major alternatives to test methods under § 63.7(e)(2)(ii) and (f), as defined in § 63.90, and as required in this subpart.

(3) Approval of major alternatives to monitoring under § 63.8(f), as defined in § 63.90, and as required in this subpart.

(4) Approval of major alternatives to recordkeeping and reporting under § 63.10(f), as defined in § 63.90, and as required in this subpart.

Subpart HHH—[Amended]

57. Section 63.1281 is amended by revising paragraphs (c)(3)(i)(A) and (B) to read:

§ 63.1281 Control equipment requirements.

* * * * *

(c) * * *

(3) * * *

(i) * * *

(A) At the inlet to the bypass device that could divert the stream away from the control device to the atmosphere, properly install, calibrate, maintain, and operate a flow indicator that is capable of taking periodic readings and sounding an alarm when the bypass device is open such that the stream is being, or could be, diverted away from the control device to the atmosphere; or

(B) Secure the bypass device valve installed at the inlet to the bypass device in the non-diverting position using a car-seal or a lock-and-key type configuration.

* * * * *

58. Section 13.1283 is amended by revising paragraph (c)(2) introductory text and adding paragraph (c)(2)(iii) to read as follows:

§ 63.1283 Inspection and monitoring requirements.

* * * * *

(c) * * *

(2) Except as provided in paragraphs (c)(5) and (6) of this section, each closed-vent system shall be inspected according to the procedures and schedule specified in paragraphs (c)(2)(i) and (ii) of this section and each bypass device shall be inspected according to the procedures of (c)(2)(iii) of this section.

* * * * *

(iii) For each bypass device, except as provided for in § 63.1281(c)(3)(ii), the owner or operator shall either:

(A) At the inlet to the bypass device that could divert the stream away from the control device to the atmosphere, set the flow indicator to take a reading at least once every 15 minutes; or

(B) If the bypass device valve installed at the inlet to the bypass device is secured in the non-diverting position using a car-seal or a lock-and-key type configuration, visually inspect the seal or closure mechanism at least once every month to verify that the valve is maintained in the non-diverting position and the vent stream is not diverted through the bypass device.

* * * * *

59. Section 63.1286 is revised to read as follows:

§ 63.1286 Implementation and enforcement.

(a) This subpart can be implemented and enforced by the U.S. EPA, or a delegated authority such as the applicable State, local, or tribal agency. If the U.S. EPA Administrator has delegated authority to a State, local, or tribal agency, then that agency, in addition to the U.S. EPA, has the authority to implement and enforce this subpart. Contact the applicable U.S. EPA Regional Office to find out if this subpart is delegated to a State, local, or tribal agency.

(b) In delegating implementation and enforcement authority of this subpart to a State, local, or tribal agency under subpart E of this part, the authorities contained in paragraph (c) of this section are retained by the Administrator of U.S. EPA and cannot be transferred to the State, local, or tribal agency.

(c) The authorities that cannot be delegated to State, local, or tribal agencies are as specified in paragraphs (c)(1) through (4) of this section.

(1) Approval of alternatives to the requirements in §§ 63.1270, 63.1275, 63.1281, and 63.1287.

(2) Approval of major alternatives to test methods under § 63.7(e)(2)(ii) and (f), as defined in § 63.90, and as required in this subpart.

(3) Approval of major alternatives to monitoring under § 63.8(f), as defined in § 63.90, and as required in this subpart.

(4) Approval of major alternatives to recordkeeping and reporting under § 63.10(f), as defined in § 63.90, and as required in this subpart.

Subpart III—[Amended]

60. Section 63.1309 is revised to read as follows:

§ 63.1309 Implementation and enforcement.

(a) This subpart can be implemented and enforced by the U.S. EPA, or a delegated authority such as the applicable State, local, or tribal agency. If the U.S. EPA Administrator has delegated authority to a State, local, or tribal agency, then that agency, in addition to the U.S. EPA, has the authority to implement and enforce this subpart. Contact the applicable U.S. EPA Regional Office to find out if implementation and enforcement of this subpart is delegated to a State, local, or tribal agency.

(b) In delegating implementation and enforcement authority of this subpart to a State, local, or tribal agency under subpart E of this part, the authorities contained in paragraph (c) of this section are retained by the Administrator of U.S. EPA and cannot be transferred to the State, local, or tribal agency.

(c) The authorities that cannot be delegated to State, local, or tribal agencies are as specified in paragraphs (c)(1) through (5) of this section.

(1) Approval of alternatives to the requirements in §§ 63.1290, 63.1293 through 63.1301, and 63.1305.

(2) Approval of major alternatives to test methods under § 63.7(e)(2)(ii) and (f), as defined in § 63.90, and as required in this subpart.

(3) Approval of major alternatives to monitoring under § 63.8(f), as defined in § 63.90, and as required in this subpart.

(4) Approval of alternatives to the specific monitoring requirements of § 63.1303(b)(5).

(5) Approval of major alternatives to recordkeeping and reporting under § 63.10(f), as defined in § 63.90, and as required in this subpart.

Subpart JJJ—[Amended]

61. Section 63.1336 is added to Subpart JJJ to read as follows:

§ 63.1336 Implementation and enforcement.

(a) This subpart can be implemented and enforced by the U.S. EPA, or a delegated authority such as the applicable State, local, or tribal agency. If the U.S. EPA Administrator has delegated authority to a State, local, or tribal agency, then that agency, in addition to the U.S. EPA, has the authority to implement and enforce this subpart. Contact the applicable U.S. EPA Regional Office to find out if this subpart is delegated to a State, local, or tribal agency.

(b) In delegating implementation and enforcement authority of this subpart to a State, local, or tribal agency under subpart E of this part, the authorities contained in paragraph (c) of this section are retained by the Administrator of U.S. EPA and cannot be transferred to the State, local, or tribal agency.

(c) The authorities that cannot be delegated to State, local, or tribal agencies are as specified in paragraphs (c)(1) through (4) of this section.

(1) Approval of alternatives to the requirements in §§ 63.1310 and 63.1311, 63.1313 through 63.1315(a)(1) through (9), (a)(11) through (18), (b) through (e), 63.1316, 63.1321 and 63.1322, 63.1323(a), (b)(1) through (4), (b)(5)(iv) and (v), (b)(6) and (7), (c) through (j), and 63.1328 through 63.1331. Where these standards reference another subpart, the cited provisions will be delegated according to the delegation provisions of the referenced subpart. Where these standards reference another subpart and modify the requirements, the requirements shall be modified as described in this subpart. Delegation of the modified requirements will also occur according to the delegation provisions of the referenced subpart.

(2) Approval of major alternatives to test methods under § 63.7(e)(2)(ii) and (f), as defined in § 63.90, and as required in this subpart.

(3) Approval of major alternatives to monitoring under § 63.8(f), as defined in § 63.90, and as required in this subpart.

(4) Approval of major alternatives to recordkeeping and reporting under § 63.10(f), as defined in § 63.90, and as required in this subpart.

Subpart LLL—[Amended]

62. Section 63.1358 is revised to read as follows:

§ 63.1358 Implementation and enforcement.

(a) This subpart can be implemented and enforced by the U.S. EPA, or a delegated authority such as the applicable State, local, or tribal agency. If the U.S. EPA Administrator has delegated authority to a State, local, or tribal agency, then that agency, in addition to the U.S. EPA, has the authority to implement and enforce this subpart. Contact the applicable U.S. EPA Regional Office to find out if this subpart is delegated to a State, local, or tribal agency.

(b) In delegating implementation and enforcement authority of this subpart to a State, local, or tribal agency under subpart E of this part, the authorities contained in paragraph (c) of this section are retained by the Administrator of U.S. EPA and cannot be transferred to the State, local, or tribal agency.

(c) The authorities that cannot be delegated to State, local, or tribal agencies are as specified in paragraphs (c)(1) through (4) of this section.

(1) Approval of alternatives to the requirements in §§ 63.1340 and 63.1343 through 63.1348.

(2) Approval of major alternatives to test methods under § 63.7(e)(2)(ii) and (f), as defined in § 63.90, and as required in this subpart.

(3) Approval of major alternatives to monitoring under § 63.8(f), as defined in § 63.90, and as required in this subpart.

(4) Approval of major alternatives to recordkeeping and reporting under § 63.10(f), as defined in § 63.90, and as required in this subpart.

Subpart MMM—[Amended]

63. Section 63.1362 is amended by revising paragraphs (j)(1) and (j)(2) to read as follows:

§ 63.1362 Standards.

* * * * *

(j) * * *

(1) Install, calibrate, maintain, and operate a flow indicator that is capable of determining whether vent stream flow is present and taking frequent, periodic readings. Records shall be maintained as specified in § 63.1367(f)(1). The flow indicator shall be installed at the entrance to any bypass line that could divert the vent stream away from the control device to the atmosphere; or

(2) Secure the bypass line valve in the closed position with a car-seal or lock-and-key type configuration. Records shall be maintained as specified in § 63.1367(f)(2).

* * * * *

64. Section 63.1366 is amended by revising paragraph (b)(1)(xiii) to read as follows:

§ 63.1366 Monitoring and inspection requirements.

* * * * *

(b) * * *

(1) * * *

(xiii) *Closed-vent system visual inspections.* The owner or operator shall comply with the requirements in either paragraph (b)(1)(xiii)(A) or (B) of this section:

(A) Set the flow indicator at the entrance to any bypass line that could divert the stream away from the control device to the atmosphere to take a reading at least once every 15 minutes; or

(B) If the bypass device valve installed at the inlet to the bypass device is secured in the closed position with a car-seal or lock-and-key type configuration, visually inspect the seal or closure mechanism at least once every month to verify that the valve is maintained in the closed position and the vent stream is not diverted through the bypass line.

* * * * *

65. Section 63.1369 is revised to read as follows:

§ 63.1369 Implementation and enforcement.

(a) This subpart can be implemented and enforced by the U.S. EPA, or a delegated authority such as the applicable State, local, or tribal agency. If the U.S. EPA Administrator has delegated authority to a State, local, or tribal agency, then that agency, in addition to the U.S. EPA, has the authority to implement and enforce this subpart. Contact the applicable U.S. EPA Regional Office to find out if implementation and enforcement of this subpart is delegated to a State, local, or tribal agency.

(b) In delegating implementation and enforcement authority of this subpart to a State, local, or tribal agency under subpart E of this part, the authorities contained in paragraph (c) of this section are retained by the Administrator of U.S. EPA and cannot be transferred to the State, local, or tribal agency.

(c) The authorities that cannot be delegated to State, local, or tribal agencies are as specified in paragraphs (c)(1) through (4) of this section.

(1) Approval of alternatives to the requirements in §§ 63.1360 and 63.1362 and 63.1363. Where these standards reference another subpart, the cited provisions will be delegated according to the delegation provisions of the referenced subpart. Where these standards reference another subpart and modify the requirements, the requirements shall be modified as described in this subpart. Delegation of the modified requirements will also

occur according to the delegation provisions of the referenced subpart.

(2) Approval of major alternatives to test methods for under § 63.7(e)(2)(ii) and (f), as defined in § 63.90, and as required in this subpart.

(3) Approval of major alternatives to monitoring under § 63.8(f), as defined in § 63.90, and as required in this subpart.

(4) Approval of major alternatives to recordkeeping and reporting under § 63.10(f), as defined in § 63.90, and as required in this subpart.

Subpart NNN—[Amended]

66. Section 63.1388 is added to Subpart NNN to read as follows:

§ 63.1388 Implementation and enforcement.

(a) This subpart can be implemented and enforced by the U.S. EPA, or a delegated authority such as the applicable State, local, or tribal agency. If the U.S. EPA Administrator has delegated authority to a State, local, or tribal agency, then that agency, in addition to the U.S. EPA, has the authority to implement and enforce this subpart. Contact the applicable U.S. EPA Regional Office to find out if implementation and enforcement of this subpart is delegated to a State, local, or tribal agency.

(b) In delegating implementation and enforcement authority of this subpart to a State, local, or tribal agency under subpart E of this part, the authorities contained in paragraph (c) of this section are retained by the Administrator of U.S. EPA and cannot be transferred to the State, local, or tribal agency.

(c) The authorities that cannot be delegated to State, local, or tribal agencies are as specified in paragraphs (c)(1) through (4) of this section.

(1) Approval of alternatives to the requirements in §§ 63.1380 and 63.1382.

(2) Approval of major alternatives to test methods under § 63.7(e)(2)(ii) and (f), as defined in § 63.90, and as required in this subpart.

(3) Approval of major alternatives to monitoring under § 63.8(f), as defined in § 63.90, and as required in this subpart.

(4) Approval of major alternatives to recordkeeping and reporting under § 63.10(f), as defined in § 63.90, and as required in this subpart.

Subpart OOO—[Amended]

67. Section 63.1419 is revised to read as follows:

§ 63.1419 Implementation and enforcement.

(a) This subpart can be implemented and enforced by the U.S. EPA, or a delegated authority such as the applicable State, local, or tribal agency. If the U.S. EPA Administrator has delegated authority to a State, local, or tribal agency, then that agency, in addition to the U.S. EPA, has the authority to implement and enforce this subpart. Contact the applicable U.S. EPA Regional Office to find out if implementation and enforcement of this subpart is delegated to a State, local, or tribal agency.

(b) In delegating implementation and enforcement authority of this subpart to a State, local, or tribal agency under subpart E of this part, the authorities contained in paragraph (c) of this section are retained by the Administrator of U.S. EPA and cannot be transferred to the State, local, or tribal agency.

(c) The authorities that cannot be delegated to State, local, or tribal agencies are as specified in paragraphs (c)(1) through (4) of this section.

(1) Approval of alternatives to the requirements in §§ 63.1400 and 63.1401 and 63.1404 through 63.1410. Where these standards reference another subpart, the cited provisions will be delegated according to the delegation provisions of the referenced subpart. Where these standards reference another subpart and modify the requirements, the requirements shall be modified as described in this subpart. Delegation of the modified requirements will also occur according to the delegation provisions of the referenced subpart.

(2) Approval of major alternatives to test methods under § 63.7(e)(2)(ii) and (f), as defined in § 63.90, and as required in this subpart.

(3) Approval of major alternatives to monitoring under § 63.8(f), as defined in § 63.90, and as required in this subpart.

(4) Approval of major alternatives to recordkeeping and reporting under § 63.10(f), as defined in § 63.90, and as required in this subpart.

Subpart PPP—[Amended]

68. Section 63.1421 is revised to read as follows:

§ 63.1421 Implementation and enforcement.

(a) This subpart can be implemented and enforced by the U.S. EPA, or a delegated authority such as the applicable State, local, or tribal agency. If the U.S. EPA Administrator has delegated authority to a State, local, or tribal agency, then that agency, in addition to the U.S. EPA, has the authority to implement and enforce this subpart. Contact the applicable U.S. EPA Regional Office to find out if this subpart is delegated to a State, local, or tribal agency.

(b) In delegating implementation and enforcement authority of this subpart to a State, local, or tribal agency under subpart E of this part, the authorities contained in paragraph (c) of this section are retained by the Administrator of U.S. EPA and cannot be transferred to the State, local, or tribal agency.

(c) The authorities that cannot be delegated to State, local, or tribal agencies are as specified in paragraphs (c)(1) through (4) of this section.

(1) Approval of alternatives to the requirements in §§ 63.1420, 63.1422, 63.1424 through 63.1428, and 63.1432 through 63.1436. Where these standards reference another subpart, the cited provisions will be delegated according to the delegation provisions of the referenced subpart. Where these standards reference another subpart and modify the requirements, the requirements shall be modified as described in this subpart. Delegation of the modified requirements will also occur according to the delegation provisions of the referenced subpart.

(2) Approval of major alternatives to test methods under § 63.7(e)(2)(ii) and (f), as defined in § 63.90, and as required in this subpart.

(3) Approval of major alternatives to monitoring under § 63.8(f), as defined in § 63.90, and as required in this subpart.

(4) Approval of major alternatives to recordkeeping and reporting under § 63.10(f), as defined in § 63.90, and as required in this subpart.

Subpart RRR—[Amended]

69. Section 63.1519 is revised to read as follows:

§ 63.1519 Implementation and enforcement.

(a) This subpart can be implemented and enforced by the U.S. EPA, or a delegated authority such as the applicable State, local, or tribal agency. If the U.S. EPA Administrator has delegated authority to a State, local, or tribal agency, then that agency, in addition to the U.S. EPA, has the authority to implement and enforce this regulation. Contact the applicable U.S. EPA Regional Office to find out if this subpart is delegated to a State, local, or tribal agency.

(b) In delegating implementation and enforcement authority of this regulation to a State, local, or tribal agency under subpart E of this part, the authorities contained in paragraph (c) of this section are retained by the Administrator of U.S. EPA and cannot

be transferred to the State, local, or tribal agency.

(c) The authorities that cannot be delegated to State, local, or tribal agencies are as specified in paragraphs (c)(1) through (4) of this section.

(1) Approval of alternatives to the requirements in §§ 63.1500, 63.1505, and 63.1506.

(2) Approval of major alternatives to test methods for under § 63.7(e)(2)(ii) and (f), as defined in § 63.90, and as required in this subpart.

(3) Approval of major alternatives to monitoring under § 63.8(f), as defined in § 63.90, and as required in this subpart.

(4) Approval of major alternatives to recordkeeping and reporting under § 63.10(f), as defined in § 63.90, and as required in this subpart.

Subpart TTT—[Amended]

70. Section 63.1550 is revised to read as follows:

§ 63.1550 Implementation and enforcement.

(a) This subpart be implemented and enforced by the U.S. EPA, or a delegated authority such as the applicable State, local, or tribal agency. If the U.S. EPA Administrator has delegated authority to a State, local, or tribal agency, then that agency, in addition to the U.S. EPA, has the authority to implement and enforce this subpart. Contact the applicable U.S. EPA Regional Office to find out if this subpart is delegated to a State, local, or tribal agency.

(b) In delegating implementation and enforcement authority of this subpart to a State, local, or tribal agency under subpart E of this part, the authorities contained in paragraph (c) of this section are retained by the Administrator of U.S. EPA and cannot be transferred to the State, local, or tribal agency.

(c) The authorities that cannot be delegated to State, local, or tribal agencies are as specified in paragraphs (c)(1) through (4) of this section.

(1) Approval of alternatives to the requirements in §§ 63.1541, 63.1543(a) through (c), (f) and (g), and 63.1544.

(2) Approval of major alternatives to test methods under § 63.7(e)(2)(ii) and (f), as defined in § 63.90, and as required in this subpart.

(3) Approval of major alternatives to monitoring under § 63.8(f), as defined in § 63.90, and as required in this subpart.

(4) Approval of major alternatives to recordkeeping and reporting under § 63.10(f), as defined in § 63.90, and as required in this subpart.

Subpart VVV—[Amended]

71. Section 63.1594 is revised to read as follows:

§ 63.1594 Who enforces this subpart?

(a) This subpart can be implemented and enforced by the U.S. EPA, or a delegated authority such as the applicable State, local, or tribal agency. If the U.S. EPA Administrator has delegated authority to a State, local, or tribal agency, then that agency, in addition to the U.S. EPA, has the authority to implement and enforce this subpart. Contact the applicable U.S. EPA Regional Office to find out if implementation and enforcement of this subpart is delegated to a State, local, or tribal agency.

(b) In delegating implementation and enforcement authority of this subpart to a State, local, or tribal agency under subpart E of this part, the authorities contained in paragraph (c) of this section are retained by the Administrator of U.S. EPA and cannot be transferred to the State, local, or tribal agency.

(c) The authorities that cannot be delegated to State, local, or tribal agencies are as specified in paragraphs (c)(1) through (4) of this section.

(1) Approval of alternatives to the requirements in §§ 63.1580, 63.1583, and § 63.1586.

(2) Approval of major alternatives to test methods under § 63.7(e)(2)(ii) and (f), as defined in § 63.90, and as required in this subpart.

(3) Approval of major alternatives to monitoring under § 63.8(f), as defined in § 63.90, and as required in this subpart.

(4) Approval of major alternatives to recordkeeping and reporting under § 63.10(f), as defined in § 63.90, and as required in this subpart.

Subpart XXX—[Amended]

72. Section 63.1661 is revised to read as follows:

§ 63.1661 Implementation and enforcement.

(a) This subpart can be implemented and enforced by the U.S. EPA, or a delegated authority such as the applicable State, local, or tribal agency. If the U.S. EPA Administrator has delegated authority to a State, local, or tribal agency, then that agency, in addition to the U.S. EPA, has the authority to implement and enforce this subpart. Contact the applicable U.S. EPA Regional Office to find out if this subpart is delegated to a State, local, or tribal agency.

(b) In delegating implementation and enforcement authority of this subpart to a State, local, or tribal agency under subpart E of this part, the authorities contained in paragraph (c) of this section are retained by the Administrator of U.S. EPA and cannot be transferred to the State, local, or tribal agency.

(c) The authorities that cannot be delegated to State, local, or tribal agencies are as specified in paragraphs (c)(1) through (4) of this section.

(1) Approval of alternatives to requirements in §§ 63.1650 and 63.1652 through 63.1654.

(2) Approval of major alternatives to test methods under § 63.7(e)(2)(ii) and (f), as defined in § 63.90, and as required in this subpart.

(3) Approval of major alternatives to monitoring under § 63.8(f), as defined in § 63.90, and as required in this subpart.

(4) Approval of major alternatives to recordkeeping and reporting under § 63.10(f), as defined in § 63.90, and as required in this subpart.

[FR Doc. 02–188 Filed 1–15–02; 8:45 am]

BILLING CODE 6560–50–P

Reader Aids

Federal Register

Vol. 67, No. 11

Wednesday, January 16, 2002

CUSTOMER SERVICE AND INFORMATION

Federal Register/Code of Federal Regulations

General Information, indexes and other finding aids	**202–523–5227**
Laws	**523–5227**
Presidential Documents	
Executive orders and proclamations	**523–5227**
The United States Government Manual	**523–5227**
Other Services	
Electronic and on-line services (voice)	**523–3447**
Privacy Act Compilation	**523–3187**
Public Laws Update Service (numbers, dates, etc.)	**523–6641**
TTY for the deaf-and-hard-of-hearing	**523–5229**

ELECTRONIC RESEARCH

World Wide Web

Full text of the daily Federal Register, CFR and other publications is located at: **http://www.access.gpo.gov/nara**

Federal Register information and research tools, including Public Inspection List, indexes, and links to GPO Access are located at: **http://www.nara.gov/fedreg**

E-mail

FEDREGTOC-L (Federal Register Table of Contents LISTSERV) is an open e-mail service that provides subscribers with a digital form of the Federal Register Table of Contents. The digital form of the Federal Register Table of Contents includes HTML and PDF links to the full text of each document.

To join or leave, go to **http://listserv.access.gpo.gov** and select *Online mailing list archives, FEDREGTOC-L, Join or leave the list (or change settings);* then follow the instructions.

PENS (Public Law Electronic Notification Service) is an e-mail service that notifies subscribers of recently enacted laws.

To subscribe, go to **http://hydra.gsa.gov/archives/publaws-l.html** and select *Join or leave the list* (or change settings); then follow the instructions.

FEDREGTOC-L and **PENS** are mailing lists only. We cannot respond to specific inquiries.

Reference questions. Send questions and comments about the Federal Register system to: **info@fedreg.nara.gov**

The Federal Register staff cannot interpret specific documents or regulations.

FEDERAL REGISTER PAGES AND DATE, JANUARY

1–264 2
265–478 3
479–638 4
639–790 7
791–1066 8
1067–1274 9
1275–1412 10
1413–1602 11
1603–1858 14
1859–2130 15
2131–2316 16

CFR PARTS AFFECTED DURING JANUARY

At the end of each month, the Office of the Federal Register publishes separately a List of CFR Sections Affected (LSA), which lists parts and sections affected by documents published since the revision date of each title.

3 CFR

Proclamations:
7516 479
Executive Orders:
12171 (Amended by EO 13252) 1601
12343 (Revoked by EO 13251) 1599
12543 (See Notice of January 3, 2002) 637
12544 (See Notice of January 3, 2002) 637
13182 (Superseded by EO 13249) 639
13249 639
13250 1597
13251 1599
13252 1601
Administrative Orders:
Notices:
Notice of January 3, 2002 637

7 CFR

301 1067
354 1070
764 791
905 801
920 1413
987 1275
1410 2131
1464 481
1721 484
1945 791
Proposed Rules:
Ch. I 525
330 697
800 25
Ch. IX 525
925 1315
959 1317
979 1319
Ch. X 525
Ch. XI 525
1240 849
1464 526

8 CFR

Proposed Rules:
236 1670

9 CFR

93 ..... 649, 1418
94 ..... 649, 1072
101 1910
116 1910
381 1277
441 1277

10 CFR

Proposed Rules:
35 274

12 CFR

614 1281
619 1281

14 CFR

25 ..... 487, 2118
39 ... 1, 123, 265, 489, 491, 492, 494, 495, 497, 499, 500, 502, 503, 505, 507, 509, 651, 653, 809, 812, 815, 1286, 1603, 1859, 2132
43 2098
45 2098
71 ..... 510, 511, 512, 513, 514, 515, 516, 517, 816, 2134
97 ..... 267, 269, 1288, 1289
107 655
108 655
121 ..... 2112, 2118
330 250
Proposed Rules:
25 1846
39 ... 29, 31, 33, 35, 38, 40, 530, 534, 537, 538, 541, 542, 544, 547, 550, 697, 700, 1165, 1167, 1169, 1419, 1670, 1913, 2145, 2146
71 ..... 552, 702, 703, 704, 705, 706, 1322, 2148, 2149, 2150, 2151, 2152, 2154, 2155, 2156
93 123
330 263

15 CFR

4a 2135
743 458
752 458
772 458
774 458

16 CFR

4 123
Proposed Rules:
432 1915

17 CFR

228 232
229 232
230 228
240 232
241 6
249 232

18 CFR

Proposed Rules:
101 1026
201 1026
284 44
352 1026

19 CFR

12 ..... 953, 1809

20 CFR

Proposed Rules:
345 2157

21 CFR

173 271
864 1606

22 CFR

41 1413
42 ....1414, 1415
126 1074

Proposed Rules:
196 1420

25 CFR

170 1290
513 1274

Proposed Rules:
542 1917

26 CFR

1 ....8, 817, 1075
301 1416
602 ....8, 817, 1075

Proposed Rules:
1 ....48, 1672
46 707
301 1421
602 1421

29 CFR

102 ....656, 657
1912 658
1912a 658
2520 ....772, 777
2560 ....772, 777
2570 777
4022 1861
4044 1861

Proposed Rules:
2700 1673

30 CFR

203 1862

Proposed Rules:
250 ....275, 1171
931 1173

32 CFR

Proposed Rules:
326 1673
505 1421
806B 1423

33 CFR

110 17
117 ....17, 1095, 1416, 1417, 1607
165 ....517, 1097, 1099, 1101, 1607

Proposed Rules:
100 1177

34 CFR

Proposed Rules:
303 1410

36 CFR

Proposed Rules:
2 1424
7 1424

37 CFR

1 520

38 CFR

52 660

Proposed Rules:
3 200
17 200
21 200

39 CFR

3 2135

Proposed Rules:
111 275

40 CFR

9 1812
50 1430
52 ....18, 19, 822
60 1295
61 1295
62 271
63 ....825, 1295
70 1431
72 1295
75 1295
141 1812
142 1812
180 ....1102, 1880
261 ....1888, 1896

Proposed Rules:
3 278
51 278
52 ....50, 849
60 ....278, 1676
61 1676
62 279
63 ....278, 850, 2286
70 278
86 2159
123 278
142 278
145 278
162 278
180 ....1917, 1925, 2175
233 278
257 278
258 278
271 ....278, 1931
281 278
403 278
501 278
721 1937
725 1179
745 278
763 278

41 CFR

Ch. 301 1899
301–10 1902

44 CFR

65 ....1610, 1611
67 ....675, 1614

Proposed Rules:
67 709

47 CFR

1 1615
6 678
7 678
15 1623
20 ....1626, 1643, 1903
22 1626
64 1643
73 ....828, 829, 830
76 ....678, 1649

Proposed Rules:
51 ....1945, 1947
73 ....851, 1704
76 1704
95 1710

48 CFR

19 1858
52 1858

Proposed Rules:
23 631
52 631

49 CFR

1 629
192 1108
195 ....831, 1650, 2136
214 1903
219 ....21, 1116
240 22

Proposed Rules:
173 852
192 1537
241 2179
529 710
531 710
533 710
535 710
537 710
538 ....710, 713
541 710
542 710
543 710
544 710
551 710
552 710
553 710
554 710
555 710
556 710
557 710
564 710
565 710
566 710
567 710
568 710
569 710
570 710
572 710
573 710
574 710
575 710
576 710
577 710
578 710
579 710

50 CFR

17 ....680, 1662
223 1116
229 ....1133, 1142
600 1540
635 1668
648 1908
660 1540
679 ....956, 1160, 1163,

Proposed Rules:
17 ....280, 1712
229 1300
600 1555
622 1323
635 629
648 1324
660 ....1186, 1555
679 1325
697 282

REMINDERS

The items in this list were editorially compiled as an aid to Federal Register users. Inclusion or exclusion from this list has no legal significance.

RULES GOING INTO EFFECT JANUARY 16, 2002

AGRICULTURE DEPARTMENT

Commodity Credit Corporation

Conservation Reserve Program:

Good faith reliance and excessive rainfall; published 1-16-02

TRANSPORTATION DEPARTMENT

Federal Aviation Administration

Airworthiness directives:

Airbus; published 12-12-01

Boeing; published 12-12-01

McDonnell Douglas; published 12-12-01

COMMENTS DUE NEXT WEEK

AGRICULTURE DEPARTMENT

Agricultural Marketing Service

Oranges, grapefruit, tangerines, and tangelos grown in—

Florida; comments due by 1-23-02; published 1-8-02 [FR 02-00450]

AGRICULTURE DEPARTMENT

Agricultural Marketing Service

Walnuts grown in—

California; comments due by 1-22-02; published 11-21-01 [FR 01-29114]

AGRICULTURE DEPARTMENT

Commodity Credit Corporation

Loan and purchase programs:

Tobacco; comments due by 1-22-02; published 1-4-02 [FR 02-00185]

AGRICULTURE DEPARTMENT

Commodity Credit Corporation

Loan and purchase programs:

Tobacco; comments due by 1-22-02; published 1-4-02 [FR 02-00186]

AGRICULTURE DEPARTMENT

Rural Utilities Service

Electric loans:

Insured and guaranteed loans; general and pre-loan policies and procedures—

Treasury rate direct loan program; comments due by 1-25-02; published 12-26-01 [FR 01-31574]

AGRICULTURE DEPARTMENT

Rural Utilities Service

Electric loans:

Insured and guaranteed loans; general and pre-loan policies and procedures—

Treasury rate direct loan program; comments due by 1-25-02; published 12-26-01 [FR 01-31575]

COMMERCE DEPARTMENT

National Oceanic and Atmospheric Administration

Fishery conservation and management:

Alaska; fisheries of Exclusive Economic Zone—

Bering Sea and Aleutian Islands groundfish, king and tanner crab, and scallop and salmon; comments due by 1-22-02; published 1-10-02 [FR 02-00644]

COURT SERVICES AND OFFENDER SUPERVISION AGENCY FOR THE DISTRICT OF COLUMBIA

Federal Tort Claims Act procedures; comments due by 1-22-02; published 11-20-01 [FR 01-28944]

DEFENSE DEPARTMENT

Prototype projects; transactions other than contracts, grants, or cooperative agreements; comments due by 1-22-02; published 11-21-01 [FR 01-29008]

ENVIRONMENTAL PROTECTION AGENCY

Air pollutants, hazardous; national emission standards:

Asphalt processing and asphalt roofing manufacturing facilities; comments due by 1-22-02; published 11-21-01 [FR 01-28192]

ENVIRONMENTAL PROTECTION AGENCY

Air programs; State authority delegations:

District of Columbia; comments due by 1-25-02; published 12-26-01 [FR 01-31485]

ENVIRONMENTAL PROTECTION AGENCY

Air programs; State authority delegations:

District of Columbia; comments due by 1-25-02; published 12-26-01 [FR 01-31486]

ENVIRONMENTAL PROTECTION AGENCY

Air quality implementation plans; √A√approval and promulgation; various States; air quality planning purposes; designation of areas:

Louisiana; comments due by 1-25-02; published 12-26-01 [FR 01-31483]

ENVIRONMENTAL PROTECTION AGENCY

Air quality implementation plans; √A√approval and promulgation; various States; air quality planning purposes; designation of areas:

Louisiana; comments due by 1-25-02; published 12-26-01 [FR 01-31484]

Air quality implementation plans; approval and promulgation; various States:

Georgia; comments due by 1-25-02; published 12-11-01 [FR 01-30587]

ENVIRONMENTAL PROTECTION AGENCY

Hazardous waste program authorizations:

Kentucky; comments due by 1-25-02; published 12-26-01 [FR 01-31487]

ENVIRONMENTAL PROTECTION AGENCY

Hazardous waste program authorizations:

Kentucky; comments due by 1-25-02; published 12-26-01 [FR 01-31488]

ENVIRONMENTAL PROTECTION AGENCY

Hazardous waste program authorizations:

Tennessee; comments due by 1-25-02; published 12-26-01 [FR 01-31489]

ENVIRONMENTAL PROTECTION AGENCY

Hazardous waste program authorizations:

Tennessee; comments due by 1-25-02; published 12-26-01 [FR 01-31490]

FEDERAL COMMUNICATIONS COMMISSION

Common carrier services:

Interconnection—

Unbundled network elements and interconnection; performance measurements and standards; comments due by 1-22-02; published 12-17-01 [FR 01-30984]

Practice and procedure:

Quiet zones; application procedures review; comments due by 1-22-02; published 12-21-01 [FR 01-31411]

HEALTH AND HUMAN SERVICES DEPARTMENT

Children and Families Administration

Foster care maintenance payments, adoption assistance, and child and family services:

Title IV-E foster care eligibility reviews and child and family services State plan reviews; technical corrections; comments due by 1-22-02; published 11-23-01 [FR 01-29174]

INTERIOR DEPARTMENT

Fish and Wildlife Service

Migratory bird hunting:

Light goose populations; harvest management; comments due by 1-25-02; published 12-10-01 [FR 01-30411]

INTERIOR DEPARTMENT

Surface Mining Reclamation and Enforcement Office

Permanent program and abandoned mine land reclamation plan submissions:

Oklahoma; comments due by 1-22-02; published 12-21-01 [FR 01-31536]

LEGAL SERVICES CORPORATION

Welfare reform; comments due by 1-25-02; published 11-26-01 [FR 01-29301]

NATIONAL CREDIT UNION ADMINISTRATION

Credit unions:

Investment and deposit activities—

Revisions and clarifications; comments due by 1-24-02; published 10-26-01 [FR 01-26934]

POSTAL SERVICE

Domestic Mail Manual:

Bedloaded bundles of periodicals; comments due by 1-22-02; published 12-20-01 [FR 01-31386]

TRANSPORTATION DEPARTMENT
Federal Aviation Administration
Airports, on-airport parking lots, and vendors of on-airfield direct services to air carriers for security mandates; reimbursement procedures; comments due by 1-22-02; published 12-21-01 [FR 01-31435]

TRANSPORTATION DEPARTMENT
Federal Aviation Administration
Airworthiness directives:
Boeing; comments due by 1-25-02; published 11-26-01 [FR 01-29183]

TRANSPORTATION DEPARTMENT
Federal Aviation Administration
Airworthiness directives:
Cirrus Design Corp.; comments due by 1-24-02; published 12-11-01 [FR 01-30423]

TRANSPORTATION DEPARTMENT
Federal Aviation Administration
Airworthiness directives:
Eurocopter France; comments due by 1-22-02; published 11-23-01 [FR 01-29189]

TRANSPORTATION DEPARTMENT
Federal Aviation Administration
Airworthiness directives:
Eurocopter France; comments due by 1-25-02; published 11-26-01 [FR 01-29188]

TRANSPORTATION DEPARTMENT
Federal Aviation Administration
Airworthiness directives:
Hartzell Propeller, Inc.; comments due by 1-22-02; published 11-20-01 [FR 01-28792]
Pratt & Whitney; comments due by 1-22-02; published 11-23-01 [FR 01-29191]
Raytheon; comments due by 1-22-02; published 11-26-01 [FR 01-29222]

TRANSPORTATION DEPARTMENT
Federal Aviation Administration
Class E airspace; comments due by 1-22-02; published 12-21-01 [FR 01-31518]

TRANSPORTATION DEPARTMENT
Federal Motor Carrier Safety Administration
Motor carrier safety standards:
Interstate school bus safety; comments due by 1-22-02; published 10-22-01 [FR 01-26562]

TRANSPORTATION DEPARTMENT
National Highway Traffic Safety Administration
Motor vehicle safety standards:
Small business entities; economic impact; comments due by 1-25-02; published 1-7-02 [FR 02-00154]

TREASURY DEPARTMENT
Internal Revenue Service
Excise taxes:
Gasoline tax claims; comments due by 1-22-02; published 10-23-01 [FR 01-26571]

VETERANS AFFAIRS DEPARTMENT
Board of Veterans Appeals:
Appeals regulations and rules of practice—
Death benefits claim by survivor; comments due by 1-22-02; published 12-21-01 [FR 01-31479]

LIST OF PUBLIC LAWS

This is a continuing list of public bills from the current session of Congress which have become Federal laws. It may be used in conjunction with ''P L U S'' (Public Laws Update Service) on 202–523–6641. This list is also available online at *http://www.nara.gov/fedreg/plawcurr.html*.

The text of laws is not published in the **Federal Register** but may be ordered in ''slip law'' (individual pamphlet) form from the Superintendent of Documents, U.S. Government Printing Office, Washington, DC 20402 (phone, 202–512–1808). The text will also be made available on the Internet from GPO Access at *http://www.access.gpo.gov/nara/nara005.html*. Some laws may not yet be available.

H.R. 2869/P.L. 107–118

Small Business Liability Relief and Brownfields Revitalization Act (Jan. 11, 2002; 115 Stat. 2356)

Last List January 14, 2002

Public Laws Electronic Notification Service (PENS)

PENS is a free electronic mail notification service of newly enacted public laws. To subscribe, go to *http://hydra.gsa.gov/archives/publaws-l.html* or send E-mail to **listserv@listserv.gsa.gov** with the following text message:

SUBSCRIBE PUBLAWS-L Your Name.

Note: This service is strictly for E-mail notification of new laws. The text of laws is not available through this service. **PENS** cannot respond to specific inquiries sent to this address.