AUTHENTICATED U.S. GOVERNMENT INFORMATION GPO

Federal Register

4–17–02 Wednesday
Vol. 67 No. 74 April 17, 2002
Pages 18773–19100

The **FEDERAL REGISTER** is published daily, Monday through Friday, except official holidays, by the Office of the Federal Register, National Archives and Records Administration, Washington, DC 20408, under the Federal Register Act (44 U.S.C. Ch. 15) and the regulations of the Administrative Committee of the Federal Register (1 CFR Ch. I). The Superintendent of Documents, U.S. Government Printing Office, Washington, DC 20402 is the exclusive distributor of the official edition.

The **Federal Register** provides a uniform system for making available to the public regulations and legal notices issued by Federal agencies. These include Presidential proclamations and Executive Orders, Federal agency documents having general applicability and legal effect, documents required to be published by act of Congress, and other Federal agency documents of public interest.

Documents are on file for public inspection in the Office of the Federal Register the day before they are published, unless the issuing agency requests earlier filing. For a list of documents currently on file for public inspection, see http://www.nara.gov/fedreg.

The seal of the National Archives and Records Administration authenticates the Federal Register as the official serial publication established under the Federal Register Act. Under 44 U.S.C. 1507, the contents of the **Federal Register** shall be judicially noticed.

The **Federal Register** is published in paper and on 24x microfiche. It is also available online at no charge as one of the databases on GPO Access, a service of the U.S. Government Printing Office.

The online edition of the **Federal Register** is issued under the authority of the Administrative Committee of the Federal Register as the official legal equivalent of the paper and microfiche editions (44 U.S.C. 4101 and 1 CFR 5.10). It is updated by 6 a.m. each day the **Federal Register** is published and it includes both text and graphics from Volume 59, Number 1 (January 2, 1994) forward.

GPO Access users can choose to retrieve online **Federal Register** documents as TEXT (ASCII text, graphics omitted), PDF (Adobe Portable Document Format, including full text and all graphics), or SUMMARY (abbreviated text) files. Users should carefully check retrieved material to ensure that documents were properly downloaded.

On the World Wide Web, connect to the **Federal Register** at http://www.access.gpo.gov/nara. Those without World Wide Web access can also connect with a local WAIS client, by Telnet to swais.access.gpo.gov, or by dialing (202) 512–1661 with a computer and modem. When using Telnet or modem, type swais, then log in as guest with no password.

For more information about GPO Access, contact the GPO Access User Support Team by E-mail at gpoaccess@gpo.gov; by fax at (202) 512–1262; or call (202) 512–1530 or 1–888–293–6498 (toll free) between 7 a.m. and 5 p.m. Eastern time, Monday–Friday, except Federal holidays.

The annual subscription price for the **Federal Register** paper edition is $699, or $764 for a combined **Federal Register, Federal Register** Index and List of CFR Sections Affected (LSA) subscription; the microfiche edition of the **Federal Register** including the **Federal Register** Index and LSA is $264. Six month subscriptions are available for one-half the annual rate. The charge for individual copies in paper form is $10.00 for each issue, or $10.00 for each group of pages as actually bound; or $2.00 for each issue in microfiche form. All prices include regular domestic postage and handling. International customers please add 25% for foreign handling. Remit check or money order, made payable to the Superintendent of Documents, or charge to your GPO Deposit Account, VISA, MasterCard or Discover. Mail to: New Orders, Superintendent of Documents, P.O. Box 371954, Pittsburgh, PA 15250–7954.

There are no restrictions on the republication of material appearing in the **Federal Register.**

How To Cite This Publication: Use the volume number and the page number. Example: 67 FR 12345.

SUBSCRIPTIONS AND COPIES

PUBLIC	
Subscriptions:	
Paper or fiche	**202–512–1800**
Assistance with public subscriptions	**202–512–1806**
General online information	**202–512–1530; 1–888–293–6498**
Single copies/back copies:	
Paper or fiche	**202–512–1800**
Assistance with public single copies	**1–866–512–1800 (Toll-Free)**
FEDERAL AGENCIES	
Subscriptions:	
Paper or fiche	**202–523–5243**
Assistance with Federal agency subscriptions	**202–523–5243**

What's NEW!

Federal Register Table of Contents via e-mail

Subscribe to FEDREGTOC, to receive the **Federal Register** Table of Contents in your e-mail every day.

If you get the HTML version, you can click directly to any document in the issue.

To subscribe, go to **http://listserv.access.gpo.gov** and select:

Online mailing list archives
FEDREGTOC-L
Join or leave the list

Then follow the instructions.

Printed on recycled paper.

Contents

Federal Register

Vol. 67, No. 74

Wednesday, April 17, 2002

Agency for Toxic Substances and Disease Registry
NOTICES
Meetings:
Scientific Counselors Board et al., 18909

Agriculture Department
See Food Safety and Inspection Service
See Forest Service
NOTICES
Agency information collection activities:
Proposed collection; comment request, 18855

Army Department
NOTICES
Environmental statements; availability, etc.:
Pueblo Chemical Depot, CO; chemical munitions disposal, 18870

Arts and Humanities, National Foundation
See National Foundation on the Arts and the Humanities

Bonneville Power Administration
NOTICES
Electric power transmission, acquisition, and conservation:
Wind resources; ACS-02 Generation Imbalance Service rate adjustment, 18871–18875

Centers for Disease Control and Prevention
NOTICES
Agency information collection activities:
Submission for OMB review; comment request, 18910
Committees; establishment, renewal, termination, etc.:
Immunization Practices Advisory Committee, 18910–18911
Meetings:
Immunization Practices Advisory Committee, 18911
Mine Safety and Health Research Advisory Committee, 18911
National Center for Infectious Diseases—
Scientific Counselors Board, 18911–18912
Public Health Service Activities and Research at DOE Sites Citizens Advisory Committee, 18912
Organization, functions, and authority delegations:
Management and Operations Office, 18912–18914
National Center for Infectious Diseases, 18914–18921

Commerce Department
See International Trade Administration
See National Institute of Standards and Technology
See National Oceanic and Atmospheric Administration

Committee for the Implementation of Textile Agreements
NOTICES
Cotton, wool, and man-made textiles:
Indonesia, 18868–18869
Sri Lanka, 18869–18870

Corporation for National and Community Service
PROPOSED RULES
Foster Grandparent Program; amendments, 18847–18848
Senior Companion Program; amendments, 18846–18847

Defense Department
See Army Department
RULES
Civilian health and medical program of uniformed services (CHAMPUS):
Enuretic devices, breast reconstruction surgery, Persons with Disabilities Program valid authorization period, and early intervention services, 18825–18827

Education Department
NOTICES
Agency information collection activities:
Submission for OMB review; comment request, 18870–18871

Employment and Training Administration
NOTICES
Adjustment assistance:
Henderson Sewing Machine Co., Inc., 18927–18928
Honeywell International, 18928
Incoe Corp., 18928
Innovex, Inc., 18929
Internet Arena, 18929
Tennford Weaving, 18929–18930
United States Steel, LLC, 18930
Adjustment assistance and NAFTA transitional adjustment assistance:
Allgon Telecom, Ltd., et al., 18923–18924
Allied Vaughn, 18924–18925
Lamtech, LLC, 18925–18926
ME International, Inc., 18926
Motorola, 18927
Grants and cooperative agreements; availability, etc.:
Faith-based and community-based non-profit organizations—
Intermediaries, 18946–18954
Small (grassroots) organizations, 18930–18937
States, 18938–18946
NAFTA transitional adjustment assistance:
Commercial Warehouse & Cartage, Inc., 18954

Energy Department
See Bonneville Power Administration
See Federal Energy Regulatory Commission
NOTICES
Grants and cooperative agreements; availability, etc.:
Plant-wide assessments, 18871

Environmental Protection Agency
PROPOSED RULES
Water supply:
National primary drinking water regulations—
Agency review results, 19029–19090
NOTICES
Meetings:
U.S. Government Representative to Commission for Environmental Cooperation—
National and Governmental Advisory Committees, 18890
Pesticide, food, and feed additive petitions:
Interregional Research Project (No. 4), 18890–18894
Monsanto Co., 18894–18899

Reports and guidance documents; availability, etc.:
Federally permitted release definition for certain air emissions, 18899–18904

Executive Office of the President
See Presidential Documents

Federal Aviation Administration
RULES
Airworthiness directives:
Bell, 18815–18817
Enstrom Helicopter Corp., 18810–18813
Fairchild, 18813–18815
Airworthiness standards:
Special conditions—
Raytheon Aircraft Models 200 and 300, 18807–18810
Jet routes and VOR Federal airways, 18817–18818

Federal Communications Commission
RULES
Common carrier services:
Non-dominant carriers; Communications Act Section 214; domestic authorizations; streamlining measures implementation, 18827–18832
Digital television stations; table of assignments:
Kansas, 18832–18833
Texas, 18832
PROPOSED RULES
Television broadcasting:
Cable modem service; high-speed Internet; broadband access over cable and other facilities; appropriate regulatory treatment, 18848–18854
NOTICES
Agency information collection activities:
Proposed collection; comment request, 18904–18907
Television broadcasting:
Cable modem service; high-speed Internet access over cable and other facilities; declaratory ruling, 18907

Federal Deposit Insurance Corporation
RULES
Practice and procedure:
Forms, instructions, and reports; technical amendments, 18793–18796

Federal Energy Regulatory Commission
NOTICES
Electric rate and corporate regulation filings:
Duke Energy Murray, LLC, et al., 18881–18885
Environmental statements; availability, etc.:
Public Utility District No. 1 of Chelan County, WA, 18885
Environmental statements; notice of intent:
Maritimes & Northeast Pipeline, L.L.C., 18885–18887
Tennessee Gas Pipeline Co., 18887–18889
Hydroelectric applications, 18889–18890
Applications, hearings, determinations, etc.:
ANR Pipeline Co., 18875
Bridgeline Gas Distribution LLC, 18875–18876
Columbia Gas Transmission Corp., 18876
East Tennessee Natural Gas Co., 18877
Gulf South Pipeline Co., LP, 18877
Southern LNG Inc., 18877
Tennessee Gas Pipeline Co., 18877–18878
Texas Gas Transmission Corp., 18878
Transcontinental Gas Pipe Line Corp., 18878–18880
Transwestern Pipeline Co., 18880
Vector Pipeline L.P., 18881
Williams Gas Pipelines Central, Inc., 18881

Federal Housing Finance Board
RULES
Affordable Housing Program; amendments, 18796–18805
Finance Office Board of Directors; minimum number of meetings, 18806–18807

Federal Reserve System
NOTICES
Banks and bank holding companies:
Change in bank control, 18907
Formations, acquisitions, and mergers, 18907

Federal Trade Commission
RULES
Children's Online Privacy Protection Act; amendment, 18818–18821
NOTICES
Premerger notification waiting periods; early terminations, 18907–18909

Food and Drug Administration
PROPOSED RULES
GRAS or prior-sanctioned ingredients:
Menhaden oil
Correction, 18834
NOTICES
Human drugs:
Patent extension; regulatory review period determinations—
MIFEPREX, 18921

Food Safety and Inspection Service
NOTICES
Meetings:
Codex Alimentarius Commission—
Animal Feeding Codex ad hoc Intergovernmental Task Force, 18855–18856

Forest Service
NOTICES
Environmental statements; notice of intent:
Coconino National Forest, AZ, 18856–18857
Tongass National Forest, AK, 18857–18859
Meetings:
Intergovernmental Advisory Committee, 18859

Health and Human Services Department
See Agency for Toxic Substances and Disease Registry
See Centers for Disease Control and Prevention
See Food and Drug Administration

Housing and Urban Development Department
NOTICES
Agency information collection activities:
Submission for OMB review; comment request, 18921–18922

Interior Department
See Minerals Management Service
See Reclamation Bureau

Internal Revenue Service
RULES
Income taxes:
Retirement plans; required distributions, 18987–19028

PROPOSED RULES
Income taxes:
Retirement plans; required distributions; cross-reference, 18834–18835
Tax-exempt bonds issued by State and local governments; arbitrage and private activity restrictions; investment-type property and private loan (prepayment), 18835–18839
Procedure and administration:
Levy restrictions during installment agreements, 18839–18842
NOTICES
Agency information collection activities:
Proposed collection; comment request, 18983–18986

International Trade Administration
NOTICES
Antidumping:
Frozen concentrated orange juice from—
Brazil, 18859–18862
Tariff rate quotas:
Worsted wool fabrics, 18863–18864
Applications, hearings, determinations, etc.:
Pennsylvania State University, 18862
University of—
Akron et al., 18862–18863
California et al., 18862
New Mexico, 18863

Labor Department
See Employment and Training Administration
See Mine Safety and Health Administration

Legal Services Corporation
PROPOSED RULES
Aliens; legal assistance restrictions:
Participation in negotiated rulemaking working group; meetings, 18845–18846

Maritime Administration
NOTICES
Coastwise trade laws; administrative waivers:
CLEOPATRA, 18978–18979
FRITHA, 18979–18980
OSPREY, 18980–18981
REBEL II, 18981
SEBIM, 18981–18982

Minerals Management Service
NOTICES
Historical royalty and production data availability, 18922–18923

Mine Safety and Health Administration
RULES
Coal mine safety and health:
Underground mines—
High-voltage longwall equipment standards; correction, 18822–18824

National Foundation on the Arts and the Humanities
NOTICES
Grants and cooperative agreements; availability, etc.:
Creation of greater public awareness of universal design, 18954

National Institute of Standards and Technology
NOTICES
Agency information collection activities:
Proposed collection; comment request, 18864–18865

National Oceanic and Atmospheric Administration
RULES
Endangered and threatened species:
Sea turtle conservation; summer flounder trawling requirements—
Turtle excluder devices, 18833
NOTICES
Agency information collection activities:
Proposed collection; comment request, 18865
Grants and cooperative agreements; availability, etc.:
Dr. Nancy Foster Scholarship Program, 18865–18868
Permits:
Marine mammals, 18868

Postal Service
PROPOSED RULES
Domestic Mail Manual:
Automated flats; new specifications, 18842–18845

Presidential Documents
PROCLAMATIONS
Special observances:
Jewish Heritage Week (Proc. 7541), 19099–19100
Pan American Day and Pan American Week (Proc. 7540), 19095–19098
EXECUTIVE ORDERS
Courts-Martial, Manual for United States; amendment (EO 13262), 18773–18792

Public Health Service
See Agency for Toxic Substances and Disease Registry
See Centers for Disease Control and Prevention
See Food and Drug Administration

Reclamation Bureau
RULES
Public conduct on Reclamation lands and projects, 19091–19094

Securities and Exchange Commission
NOTICES
Self-regulatory organizations; proposed rule changes:
American Stock Exchange LLC, 18962–18964
International Securities Exchange LLC, 18964–18965
New York Stock Exchange, Inc., 18965–18975
Pacific Exchange, Inc., 18975–18977
Applications, hearings, determinations, etc.:
FBR Asset Investment Corp., 18954–18955
Public utility holding company filings, 18955–18962

Selective Service System
NOTICES
Agency information collection activities:
Submission for OMB review; comment request, 18977–18978

State Department
RULES
Visas; nonimmigrant documentation:
INTELSAT; addition as international organization
Clarification of status of organization and personnel affected, 18821–18822

NOTICES
Art objects; importation for exhibition:
Tempo, 18978
Munitions export licenses; suspension, revocation, etc.:
Zimbabwe, 18978

State Justice Institute
NOTICES
Meetings; Sunshine Act, 18978

Textile Agreements Implementation Committee
See Committee for the Implementation of Textile Agreements

Toxic Substances and Disease Registry Agency
See Agency for Toxic Substances and Disease Registry

Transportation Department
See Federal Aviation Administration
See Maritime Administration

Treasury Department
See Internal Revenue Service
NOTICES
Agency information collection activities:
Submission for OMB review; comment request, 18982–18983

Separate Parts In This Issue

Part II
Treasury Department, Internal Revenue Service, 18987–19028

Part III
Environmental Protection Agency, 19029–19090

Part IV
Interior Department, Reclamation Bureau, 19091–19094

Part V
Executive Office of the President, Presidential Documents, 19095–19100

Reader Aids
Consult the Reader Aids section at the end of this issue for phone numbers, online resources, finding aids, reminders, and notice of recently enacted public laws.
To subscribe to the Federal Register Table of Contents LISTSERV electronic mailing list, go to http://listserv.access.gpo.gov and select Online mailing list archives, FEDREGTOC-L, Join or leave the list (or change settings); then follow the instructions.

CFR PARTS AFFECTED IN THIS ISSUE

A cumulative list of the parts affected this month can be found in the Reader Aids section at the end of this issue.

3 CFR

Executive Orders:

12473 (See EO 13262) 18773
13262 18773

Proclamations:

7540 19097
7541 19099

12 CFR

304 18793
951 18796
985 18806

14 CFR

23 18807
39 (3 documents) 18810, 18813, 18815
71 18817

16 CFR

312 18818

21 CFR

Proposed Rules:

184 18834

22 CFR

41 18821

26 CFR

1 18988
54 18988
602 18988

Proposed Rules:

1 (2 documents) 18834, 18835
301 18839

30 CFR

75 18822

32 CFR

199 18825

39 CFR

Proposed Rules:

111 18842

40 CFR

Proposed Rules:

141 19030

43 CFR

423 19092

45 CFR

Proposed Rules:

1626 18845
2551 18846
2552 18847

47 CFR

0 18827
1 18827
63 18827
73 (2 documents) 18832

Proposed Rules:

76 18848

50 CFR

223 18833

Federal Register
Vol. 67, No. 74
Wednesday, April 17, 2002

Presidential Documents

Title 3—

The President

Executive Order 13262 of April 11, 2002

2002 Amendments to the Manual for Courts-Martial, United States

By the authority vested in me as President by the Constitution and the laws of the United States of America, including chapter 47 of title 10, United States Code (Uniform Code of Military Justice, 10 U.S.C. 801–946), and in order to prescribe amendments to the Manual for Courts-Martial, United States, prescribed by Executive Order 12473, as amended, it is hereby ordered as follows:

Section 1. Thirty days after the date of this Executive Order, the provisions of Federal Rule of Evidence 415, adopted September 13, 1994, will no longer be applicable to the Military Rules of Evidence. This evidentiary rule became applicable to courts-martial on January 6, 1996, pursuant to Military Rule of Evidence 1102.

Sec. 2. The last subparagraph of paragraph 4, of Part I, of the Manual for Courts-Martial, United States, is amended as follows:

''The Manual shall be identified as ''Manual for Courts-Martial, United States (2002 edition).'' Any amendments to the Manual made by Executive Order shall be identified as ''2002'' Amendments to the Manual for Courts-Martial, United States'' ; ''2002'' being the year the Executive Order was signed. If two or more Executive Orders amending the Manual are signed during the same year, then the second and any subsequent Executive Orders will be identified by placing a small case letter of the alphabet after the last digit of the year beginning with ''a'' for the second Executive Order and continuing in alphabetic order for subsequent Executive Orders.''.

Sec. 3. Part II of the Manual for Courts-Martial, United States, is amended as follows:

a. R.C.M. 201(f)(2)(B) is amended to read as follows:

''(i) Upon a finding of guilty, special courts-martial may adjudge, under limitations prescribed by this Manual, any punishment authorized under R.C.M. 1003 except death, dishonorable discharge, dismissal, confinement for more than 1 year, hard labor without confinement for more than 3 months, forfeiture of pay exceeding two-thirds pay per month, or any forfeiture of pay for more than 1 year.

''(ii) A bad-conduct discharge, confinement for more than six months, or forfeiture of pay for more than six months, may not be adjudged by a special court-martial unless:

''(a) Counsel qualified under Article 27(b) is detailed to represent the accused; and

''(b) A military judge is detailed to the trial, except in a case in which a military judge could not be detailed because of physical conditions or military exigencies. Physical conditions or military exigencies, as the terms are here used, may exist under rare circumstances, such as on an isolated ship on the high seas or in a unit in an inaccessible area, provided compelling reasons exist why the trial must be held at that time and at that place. Mere inconvenience does not constitute a physical condition or military exigency and does not excuse a failure to detail a military judge. If a military judge cannot be detailed because of physical conditions or military exigencies, a bad-conduct discharge, confinement for more than six months, or forfeiture of pay for more than

six months, may be adjudged provided the other conditions have been met. In that event, however, the convening authority shall, prior to trial, make a written statement explaining why a military judge could not be obtained. This statement shall be appended to the record of trial and shall set forth in detail the reasons why a military judge could not be detailed, and why the trial had to be held at that time and place.''

b. R.C.M. 701(b)(4) is amended to read as follows:

''(4) Reports of examination and tests. If the defense requests disclosure under subsection (a)(2)(B) of this rule, upon compliance with such request by the Government, the defense, on request of trial counsel, shall (except as provided in R.C.M. 706, Mil. R. Evid. 302, and Mil. R. Evid. 513) permit the trial counsel to inspect any results or reports of physical or mental examinations and of scientific tests or experiments made in connection with the particular case, or copies thereof, that are within the possession, custody, or control of the defense that the defense intends to introduce as evidence in the defense case-in-chief at trial or that were prepared by a witness whom the defense intends to call at trial when the results or reports relate to that witness' testimony.''

c. R.C.M. 806 is amended by adding at the end the following new subsection (d):

''(d) Protective orders. The military judge may, upon request of any party or sua sponte, issue an appropriate protective order, in writing, to prevent parties and witnesses from making extrajudicial statements that present a substantial likelihood of material prejudice to a fair trial by impartial members. For purposes of this subsection, ''military judge'' does not include the president of a special court-martial without a military judge.''.

d. R.C.M. 1001(b)(3)(A) is amended to read as follows:

''(A) In general. The trial counsel may introduce evidence of military or civilian convictions of the accused. For purposes of this rule, there is a ''conviction'' in a court-martial case when a sentence has been adjudged. In a civilian case, a ''conviction'' includes any disposition following an initial judicial determination or assumption of guilt, such as when guilt has been established by guilty plea, trial, or plea of *nolo contendere*, regardless of the subsequent disposition, sentencing procedure, or final judgment. However, a ''civilian conviction'' does not include a diversion from the judicial process without a finding or admission of guilt; expunged convictions; juvenile adjudications; minor traffic violations; foreign convictions; tribal court convictions; or convictions reversed, vacated, invalidated or pardoned because of errors of law or because of subsequently discovered evidence exonerating the accused.''.

e. R.C.M. 1003(b)(3) is amended to read as follows:

''(3) Fine. Any court-martial may adjudge a fine in lieu of or in addition to forfeitures. Special and summary courts-martial may not adjudge any fine or combination of fine and forfeitures in excess of the total amount of forfeitures that may be adjudged in that case. In order to enforce collection, a fine may be accompanied by a provision in the sentence that, in the event the fine is not paid, the person fined shall, in addition to any period of confinement adjudged, be further confined until a fixed period considered an equivalent punishment to the fine has expired. The total period of confinement so adjudged shall not exceed the jurisdictional limitations of the court- martial;''

f. R.C.M. 1003(b)(7) is amended to read as follows:

''(7) Confinement. The place of confinement shall not be designated by the court-martial. When confinement for life is authorized, it may be with or without eligibility for parole. A court-martial shall not adjudge a sentence to solitary confinement or to confinement without hard labor;''.

g. R.C.M. 1004(e) is amended to read as follows:

''(e) Other penalties. Except for a violation of Article 106, when death is an authorized punishment for an offense, all other punishments authorized under R.C.M. 1003 are also authorized for that offense, including

confinement for life, with or without eligibility for parole, and may be adjudged in lieu of the death penalty, subject to limitations specifically prescribed in this Manual. A sentence of death includes a dishonorable discharge or dismissal as appropriate. Confinement is a necessary incident of a sentence of death, but not a part of it.''

h. R.C.M. 1006(d)(4)(B) is amended to read as follows:

''(B) Confinement for life, with or without eligibility for parole, or more than 10 years. A sentence that includes confinement for life, with or without eligibility for parole, or more than 10 years may be adjudged only if at least three-fourths of the members present vote for that sentence.''

i. R.C.M. 1009(e)(3)(B)(ii) is amended to read as follows:

''(ii) In the case of a sentence which includes confinement for life, with or without eligibility for parole, or more than 10 years, more than one-fourth of the members vote to reconsider; or''.

j. R.C.M. 1103(b)(2)(B)(i) is amended to read as follows:

''(i) Any part of the sentence adjudged exceeds six months confinement, forfeiture of pay greater than two-thirds pay per month, or any forfeiture of pay for more than six months or other punishments that may be adjudged by a special court-martial; or''.

k. R.C.M. 1103(c) is amended to read as follows:

''(c) Special courts-martial.

''(1) Involving a bad-conduct discharge, confinement for more than six months, or forfeiture of pay for more than six months. The requirements of subsections (b)(1), (b)(2)(A), (b)(2)(B), (b)(2)(D), and (b)(3) of this rule shall apply in a special court-martial in which a bad-conduct discharge, confinement for more than six months, or forfeiture of pay for more than six months, has been adjudged.

''(2) All other special courts-martial. If the special court-martial resulted in findings of guilty but a bad-conduct discharge, confinement for more than six months, or forfeiture of pay for more than six months, was not adjudged, the requirements of subsections (b)(1), (b)(2)(D), and (b)(3)(A)–(F) and (I)–(M) of this rule shall apply.''.

l. R.C.M. 1103(f)(1) is amended to read as follows:

''(1) Approve only so much of the sentence that could be adjudged by a special court-martial, except that a bad-conduct discharge, confinement for more than six months, or forfeiture of two-thirds pay per month for more than six months, may not be approved; or''.

m. R.C.M. 1104(a)(2)(A) is amended to read as follows:

''(A) Authentication by the military judge. In special courts-martial in which a bad-conduct discharge, confinement for more than six months, or forfeiture of pay for more than six months, has been adjudged and in general courts-martial, except as provided in subsection (a)(2)(B) of this rule, the military judge present at the end of the proceedings shall authenticate the record of trial, or that portion over which the military judge presided. If more than one military judge presided over the proceedings, each military judge shall authenticate the record of the proceedings over which that military judge presided, except as provided in subsection (a)(2)(B) of this rule. The record of trial of special courts-martial in which a bad-conduct discharge, confinement for more than six months, or forfeiture of pay for more than six months, was not adjudged shall be authenticated in accordance with regulations of the Secretary concerned.''

n. R.C.M. 1104(e) is amended to read as follows:

''(e) Forwarding. After every court-martial, including a rehearing and new and other trials, the authenticated record shall be forwarded to the convening authority for initial review and action, provided that in case of a special court-martial in which a bad-conduct discharge or confinement for one year was adjudged or a general court-martial, the convening authority shall refer the record to the staff judge advocate or legal officer for

recommendation under R.C.M. 1106 before the convening authority takes action.''.

o. R.C.M. 1106(a) is amended to read as follows:

''(a) In general. Before the convening authority takes action under R.C.M. 1107 on a record of trial by general court-martial or a record of trial by special court-martial that includes a sentence to a bad-conduct discharge or confinement for one year, that convening authority's staff judge advocate or legal officer shall, except as provided in subsection (c) of this rule, forward to the convening authority a recommendation under this rule.''.

p. R.C.M. 1107(d)(4) is amended to read as follows:

''(4) Limitations on sentence based on record of trial. If the record of trial does not meet the requirements of R.C.M. 1103(b)(2)(B) or (c)(1), the convening authority may not approve a sentence in excess of that which may be adjudged by a special court-martial, or one that includes a bad-conduct discharge, confinement for more than six months, forfeiture of pay exceeding two-thirds pay per month, or any forfeiture of pay for more than six months.''.

q. R.C.M. 1107(d) is amended by adding at the end the following new paragraph:

''(5) Limitations on sentence of a special court-martial where a fine has been adjudged. A convening authority may not approve in its entirety a sentence adjudged at a special court-martial when, if approved, the cumulative impact of the fine and forfeitures, whether adjudged or by operation of Article 58b, would exceed the jurisdictional maximum dollar amount of forfeitures that may be adjudged at that court-martial.''.

r. R.C.M. 1109(e) and (e)(1) are amended to read as follows:

''(e) Vacation of a suspended special court-martial sentence wherein a bad-conduct discharge or confinement for one year was not adjudged.

''(1) In general. Before vacating the suspension of a special court-martial punishment that does not include a bad-conduct discharge or confinement for one year, the special court-martial convening authority for the command in which the probationer is serving or assigned shall cause a hearing to be held on the alleged violation(s) of the conditions of suspension.''.

s. R.C.M. 1109(f) and (f)(1) are amended to read as follows:

''(f) Vacation of a suspended special court-martial sentence that includes a bad-conduct discharge or confinement for one year.

''(1) The procedure for the vacation of a suspended approved bad-conduct discharge or of any suspended portion of an approved sentence to confinement for one year, shall follow that set forth in subsection (d) of this rule.''.

t. R.C.M. 1110(a) is amended to read as follows:

''(a) In general. After any general court-martial, except one in which the approved sentence includes death, and after any special court-martial in which the approved sentence includes a bad-conduct discharge or confinement for one year, the accused may waive or withdraw appellate review.''.

u. R.C.M. 1111(b) is amended to read as follows:

''(1) Cases including an approved bad-conduct discharge or confinement for one year. If the approved sentence of a special court-martial includes a bad-conduct discharge or confinement for one year, the record shall be disposed of as provided in subsection (a) of this rule.

''(2) Other cases. The record of trial by a special court-martial in which the approved sentence does not include a bad-conduct discharge or confinement for one year shall be forwarded directly to a judge advocate for review under R.C.M. 1112. Four copies of the order promulgating the result of trial shall be forwarded with the record of trial, unless otherwise prescribed by regulations of the Secretary concerned.''.

v. R.C.M. 1112(a)(2) is amended to read as follows:

''(2) Each special court-martial in which the accused has waived or withdrawn appellate review under R.C.M. 1110 or in which the approved sentence does not include a bad-conduct discharge or confinement for one year; and''.

w. R.C.M 1305(d)(2) is amended to read as follows:

''(2) Forwarding to the convening authority. The original and one copy of the record of trial shall be forwarded to the convening authority after compliance with subsection (d)(1) of this rule.''.

Sec. 4. Part III of the Manual for Courts-Martial, United States, is amended in Mil. R. Evid. 615 by striking the period at the end of the rule and adding '', or (4) a person authorized by statute to be present at courts-martial, or (5) any victim of an offense from the trial of an accused for that offense because such victim may testify or present any information in relation to the sentence or that offense during the presentencing proceedings.''.

Sec. 5. Part IV of the Manual for Courts-Martial, United States, is amended as follows:

a. All ''Sample specification(s)'' subparagraphs in the Punitive Articles (Part IV, M.C.M.) are amended by striking ''_____ 19____'' and inserting ''_____ 20____.''.

b. Paragraph 27e(1)(a) is amended to read as follows:

''(a) of a value of $500.00 or less. Bad-conduct discharge, forfeiture of all pay and allowances, and confinement for 6 months.''.

c. Paragraph 27e(1)(b) is amended to read as follows:

''(b) of a value of more than $500.00 or any firearm or explosive. Dishonorable discharge, forfeiture of all pay and allowances, and confinement for 5 years.''.

d. Paragraph 27f(3) is amended to read as follows:

''(3) Dealing in captured or abandoned property. In that _____ (personal jurisdiction data), did, (at/on board - location), on or about _____ 20 _____, (buy) (sell) (trade) (deal in) (dispose of) (_____) certain (captured) (abandoned) property, to wit: _____, (a firearm) (an explosive), of a value of (about) $_____, thereby (receiving) (expecting) a (profit) (benefit) (advantage) to (himself/herself) (_____, his/her accomplice) (_____, his/her brother) (_____).''.

e. Strike paragraph 31c(6).

f. Paragraph 43e(1), is amended to read as follows:

''(1) Article 118(1) or (4)—death. Mandatory minimum—imprisonment for life with eligibility for parole.''.

g. Paragraph 45e(3) is amended to read as follows:

''(3) Carnal knowledge with a child under the age of 12 years at the time of the offense. Dishonorable discharge, forfeiture of all pay and allowances, and confinement for life without eligibility for parole.''.

h. Paragraph 46c(1)(h) is amended by adding at the end the following new clause:

''(vi) Credit, Debit, and Electronic Transactions. Wrongfully engaging in a credit, debit, or electronic transaction to obtain goods or money is an obtaining- type larceny by false pretense. Such use to obtain goods is usually a larceny of those goods from the merchant offering them. Such use to obtain money or a negotiable instrument (e.g., withdrawing cash from an automated teller or a cash advance from a bank) is usually a larceny of money from the entity presenting the money or a negotiable instrument. For the purpose of this section, the term 'credit, debit, or electronic transaction' includes the use of an instrument or device, whether known as a credit card, debit card, automated teller machine (ATM) card or by any other name, including access devices such as code, account

number, electronic serial number or personal identification number, issued for the use in obtaining money, goods, or anything else of value.''.

i. Paragraph 51e(1) is amended to read as follows:

''(1) By force and without consent. Dishonorable discharge, forfeiture of all pay and allowances, and confinement for life without eligibility for parole.''.

j. Paragraph 51e(3) is amended to read as follows:

''(3) With a child under the age of 12 years at the time of the offense. Dishonorable discharge, forfeiture of all pay and allowances, and confinement for life without eligibility for parole.''

k. Paragraph 62c is amended to read as follows:

''c. Explanation.

''(1) Nature of offense. Adultery is clearly unacceptable conduct, and it reflects adversely on the service record of the military member.

''(2) Conduct prejudicial to good order and discipline or of a nature to bring discredit upon the armed forces. To constitute an offense under the UCMJ, the adulterous conduct must either be directly prejudicial to good order and discipline or service discrediting. Adulterous conduct that is directly prejudicial includes conduct that has an obvious, and measurably divisive effect on unit or organization discipline, morale, or cohesion, or is clearly detrimental to the authority or stature of or respect toward a servicemember. Adultery may also be service discrediting, even though the conduct is only indirectly or remotely prejudicial to good order and discipline. Discredit means to injure the reputation of the armed forces and includes adulterous conduct that has a tendency, because of its open or notorious nature, to bring the service into disrepute, make it subject to public ridicule, or lower it in public esteem. While adulterous conduct that is private and discreet in nature may not be service discrediting by this standard, under the circumstances, it may be determined to be conduct prejudicial to good order and discipline. Commanders should consider all relevant circumstances, including but not limited to the following factors, when determining whether adulterous acts are prejudicial to good order and discipline or are of a nature to bring discredit upon the armed forces:

''(a) The accused's marital status, military rank, grade, or position;

''(b) The co-actor's marital status, military rank, grade, and position, or relationship to the armed forces;

''(c) The military status of the accused's spouse or the spouse of co-actor, or their relationship to the armed forces;

''(d) The impact, if any, of the adulterous relationship on the ability of the accused, the co-actor, or the spouse of either to perform their duties in support of the armed forces;

''(e) The misuse, if any, of government time and resources to facilitate the commission of the conduct;

''(f) Whether the conduct persisted despite counseling or orders to desist; the flagrancy of the conduct, such as whether any notoriety ensued; and whether the adulterous act was accompanied by other violations of the UCMJ;

''(g) The negative impact of the conduct on the units or organizations of the accused, the co-actor or the spouse of either of them, such as a detrimental effect on unit or organization morale, teamwork, and efficiency;

''(h) Whether the accused or co-actor was legally separated; and

''(i) Whether the adulterous misconduct involves an ongoing or recent relationship or is remote in time.

''(3) Marriage. A marriage exists until it is dissolved in accordance with the laws of a competent state or foreign jurisdiction.

''(4) Mistake of fact. A defense of mistake of fact exists if the accused had an honest and reasonable belief either that the accused and the co-actor were both unmarried, or that they were lawfully married to each other. If this defense is raised by the evidence, then the burden of proof is upon the United States to establish that the accused's belief was unreasonable or not honest.''.

l. Paragraph 92e is amended to read as follows:

''e. Maximum punishment. Dishonorable discharge, forfeiture of all pay and allowances, and confinement for life without eligibility for parole.''.

m. Paragraphs 32e, 33e, 46c(1)(g)(iii), 46e, 49e, 52e, 58e, 78e and 106e are amended by striking ''$100.00'' each place it appears and inserting ''$500.00''.

Sec. 6. These amendments shall take effect on May 15, 2002.

a. The amendments made to Rules for Courts-Martial 806(d) and 1001(b)(3)(A) shall only apply in cases in which arraignment has been completed on or after May 15, 2002.

b. The amendments made to Rules for Courts- Martial 1003(b)(7), 1004(e), 1006(d)(4)(B), and 1009(e)(3)(B)(ii) shall only apply to offenses committed after November 18, 1997. In cases not involving these amendments, the maximum punishment for an offense committed prior to May 15, 2002, shall not exceed the applicable maximum in effect at the time of the commission of such offense. Provided further, that for offenses committed prior to May 15, 2002, for which a sentence is adjudged on or after May 15, 2002, if the maximum punishment authorized in this Manual is less than that previously authorized, the lesser maximum authorized punishment shall apply.

c. The amendment made to Military Rules of Evidence 615 shall apply only in cases in which arraignment has been completed on or after May 15, 2002.

d. Nothing in these amendments shall be construed to make punishable any act done or omitted prior to May 15, 2002, that was not punishable when done or omitted.

e. Nothing in these amendments shall be construed to invalidate any nonjudicial punishment proceeding, restraint, investigation, referral of charges, trial in which arraignment occurred, or other action begun prior to May 15, 2002, and any such nonjudicial punishment, restraint, investigation, referral of charges, trial, or other action may proceed in the same manner and with the same effect as if these amendments had not been prescribed.

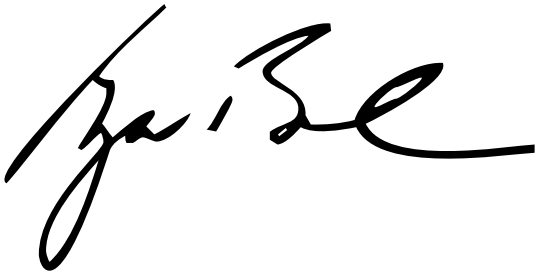

THE WHITE HOUSE,

April 11, 2002.

Billing code 3195–01–P

CHANGES TO THE DISCUSSION ACCOMPANYING THE MANUAL FOR COURTS-MARTIAL, UNITED STATES

a. The Discussion following the Preamble is amended by adding the following at the end of the Discussion:

''The amendment to paragraph 4 of the Preamble is intended to address the possibility of more frequent amendments to the Manual and the arrival of the 21st century. In the event that multiple editions of the Manual are published in the same year, the numbering and lettering of the edition should match that of the most recent Executive Order included in the publication.''

b. The seventh paragraph of the Discussion following R.C.M. 601(e)(1) is amended to read as follows:

''The convening authority should acknowledge by an instruction that a bad-conduct discharge, confinement for more than six months, or forfeiture of pay for more than six months, may not be adjudged when the prerequisites under Article 19 will not be met. *See* R.C.M. 201(f)(2)(B)(ii). For example, this instruction should be given when a court reporter is not detailed.''.

c. The Discussion following R.C.M. 701(a)(2)(B) is amended to read as follows:

''For specific rules concerning certain mental examinations of the accused or third party patients, *see* R.C.M. 701(f), R.C.M. 706, Mil. R. Evid. 302, and Mil. R. Evid. 513.''

d. The ninth paragraph of the Discussion following R.C.M. 806(b) is amended to read as follows:

''There are other methods of protecting the proceedings from harmful effects of publicity, including a thorough *voir dire* (*see* R.C.M. 912), and, if necessary, a continuance to allow the harmful effects of publicity to dissipate. *See* R.C.M. 906(b)(1). Other methods that may occasionally be appropriate and which are usually preferable to closing a session include: directing members not to read, listen to, or watch any accounts concerning the case; issuing a protective order under R.C.M. 806(d); and selecting members from recent arrivals in the command, or from outside the immediate area. *See* R.C.M. 503(a)(3). In more extreme cases, the place of trial may be changed (*see* R.C.M. 906(b)(11), or members may be sequestered.

e. The following Discussion is added after R.C.M. 806(d):

''A protective order may proscribe extrajudicial statements by counsel, parties, and witnesses that might divulge prejudicial matter not of public record in the case. Other appropriate matters may also be addressed by such a protective order. Before issuing a protective order, the military judge must consider whether other available remedies would effectively mitigate the adverse effects that any publicity might create, and consider such an order's likely effectiveness in ensuring an impartial court-martial panel. A military judge should not issue a protective order without first providing notice to the parties and an opportunity to be heard. The military judge must state on the record the reasons for issuing the protective order. If the reasons for issuing the order change, the military judge may reconsider the continued necessity for a protective order.''

f. The first paragraph of the Discussion following R.C.M. 808 is amended to read as follows:

''Except in a special court-martial not authorized to adjudge a bad-conduct discharge, confinement for more than six months, or forfeiture of pay for more than six months, the trial counsel should ensure that a qualified court reporter is detailed to the court-martial. Trial counsel should also ensure that all exhibits and other documents relating to the case are properly maintained for later inclusion in the record. *See also* R.C.M. 1103(j) as to the use of videotapes, audiotapes, and similar recordings for the record of trial. Because of the potential requirement for a verbatim transcript, all proceedings, including sidebar conferences, arguments, and rulings and instructions by the military judge, should be recorded.''

g. The Discussion following R.C.M. 1001(b)(3)(A) is amended by adding the following at the end of the Discussion:

''Whether a civilian conviction is admissible is left to the discretion of the military judge. As stated in the rule, a civilian ''conviction'' includes any disposition following an initial judicial determination or assumption of guilt regardless of the sentencing procedure and the final judgment following probation or other sentence. Therefore, convictions may be admissible regardless of whether a court ultimately suspended judgment upon discharge of the accused following probation, permitted withdrawal of the guilty plea, or applies some other form of alternative sentencing. Additionally, the term ''conviction'' need not be taken to mean a final judgment of conviction and sentence.''

h. The sixth paragraph of the Discussion following R.C.M. 1003(b)(2) is amended to read as follows:

''At a special court-martial, if a bad-conduct discharge and confinement are adjudged, then the operation of Article 58b results in a forfeiture of two-thirds of pay only (not allowances) during that period of confinement. If only confinement is adjudged, and that confinement exceeds six months, then the operation of Article 58b results in a forfeiture of two-thirds of pay only (not allowances) during the period of confinement. If only a bad conduct discharge is adjudged, Article 58b has no effect on pay.''.

i. The Discussion following R.C.M. 1003(b)(3) is amended by adding at the end the following paragraph:

''Where the sentence adjudged at a special court-martial includes a fine, *see* R.C.M. 1107(d)(5) for limitations on convening authority action on the sentence.''

j. The Discussion following R.C.M. 1003(b)(8) is amended by adding the following at the end of the Discussion:

''See Article 56a.''

k. The Discussion following R.C.M. 1003(c)(4) is amended by striking ''R.C.M. 1107(d)(3)'' and inserting ''R.C.M. 1107(d)(4).''

l. The Discussion following R.C.M. 1006(c) is amended to read as follows:

''A proposal should state completely each kind and, where appropriate, amount of authorized punishment proposed by that member. For example, a proposal of confinement for life would state whether it is with or without eligibility for parole. See R.C.M. 1003(b).''

m. The second paragraph of the Discussion following R.C.M. 1107(d)(1) is amended to read as follows:

''When mitigating forfeitures, the duration and amounts of forfeiture may be changed as long as the total amount forfeited is not increased and neither the amount nor duration of the forfeitures exceeds the jurisdiction of the court-martial. When mitigating confinement or hard labor without confinement, the convening authority should use the equivalencies at R.C.M. 1003(b)(6) and (7), as appropriate. One form of punishment may be changed to a less severe punishment of a different nature, as long as the changed punishment is one that the court-martial could have adjudged. For example, a bad-conduct discharge adjudged by a special court-martial could be changed to confinement for up to one year (but not vice versa). A pretrial agreement may also affect what punishments may be changed by the convening authority.''.

n. The Discussion following R.C.M. 1109(f) is amended to read as follows:

''An officer exercising special court-martial jurisdiction may vacate any suspended punishments other than an approved suspended bad-conduct discharge or any suspended portion of an approved sentence to confinement for one year, regardless of whether they are contained in the same sentence as the bad-conduct discharge or confinement for one year. See Appendix 18 for a sample of a Report of Proceedings to Vacate Suspension of a Special Court-Martial Sentence including a bad-conduct discharge or confinement for one year under Article 72, UCMJ, and R.C.M. 1109 (DD Form 455).''.

o. The Discussion following R.C.M. 1110(a) is amended to read as follows:

''Appellate review is not available for special courts-martial in which a bad-conduct discharge or confinement for one year was not adjudged or approved or for summary courts-martial. Cases not subject to appellate review, or in which appellate review is waived or withdrawn, are reviewed by a judge advocate under R.C.M. 1112. Such cases may also be submitted to the Judge Advocate General for review. *See* R.C.M. 1201(b)(3). Appellate review is mandatory when the approved sentence includes death.''.

CHANGES TO APPENDIX 8, GUIDE FOR GENERAL AND SPECIAL COURTS-MARTIAL, MANUAL FOR COURTS-MARTIAL, UNITED STATES

Appendix 8, is amended—

a. by amending the left margin entry to Note 100 to read as follows:

''Advice in GCMs and SPCMs in which BCD or confinement for one year is adjudged'';

b. by amending Note 100 to read as follows:

''[Note 100. In cases subject to review by a Court of Criminal Appeals, the following advice should be given. In other cases proceed to Note 101 or 102 as appropriate.]'';

c. by amending the left margin entry to Note 102 to read as follows:

''SPCM not involving a BCD or confinement for one year''; and

d. by amending Note 102 to read as follows:

[Note 102. In special courts-martial not involving BCD or confinement for one year, the following advice should be given.]''.

CHANGES TO THE MAXIMUM PUNISHMENT CHART OF THE MANUAL FOR COURTS-MARTIAL, UNITED STATES

Appendix 12, the Maximum Punishment Chart, is amended—

a. by striking the item relating to Article 103 and inserting:

''103 Captured, abandoned property; failure to secure, etc. Of value of $500.00 or less . . . . . BCD 6 mos. Total

Of value of more than $500.00 . DD, BCD 5 yrs. Total

Any firearm or explosive . . . . . DD, BCD 5 yrs. Total

Looting, pillaging . . . . . DD, BCD Life4 Total''; and

b. in the items relating to Articles 108, 109, 121, 123a, 126, 132, and 134 (False Pretenses, obtaining services under; and Stolen Property, knowingly receiving, buying, concealing), by striking ''100.00'' each place it appears and inserting ''$500.00''.

CHANGES TO THE GUIDE FOR PREPARATION OF RECORD OF TRIAL WHEN A VERBATIM RECORD IS NOT REQUIRED, MANUAL FOR COURTS-MARTIAL, UNITED STATES

Appendix 13 is amended—

a. in the third subparagraph of paragraph a, by replacing ''1-inch margin'' with ''one-inch margin'' and replacing ''left hand'' with ''left-hand''.

CHANGES TO THE GUIDE FOR PREPARATION OF RECORD OF TRIAL WHEN A VERBATIM RECORD IS REQUIRED, MANUAL FOR COURTS-MARTIAL, UNITED STATES

Appendix 14, is amended—

a. at page A14–6, by amending the second bracketed format under the third note to read as follows:

''[The (court-martial) (session) was (adjourned) (recessed) at _____ hours, _____.]''.

CHANGES TO APPENDIX 17, FORMS FOR COURT-MARTIAL ORDERS, MANUAL FOR COURTS-MARTIAL, UNITED STATES

The first note to paragraph d of Appendix 17 is amended to read as follows:

''[Note. Orders promulgating the vacation of the suspension of a dismissal will be published by departmental orders of the Secretary concerned. Vacations of any other suspension of a general court-martial sentence, or of a special court-martial sentence that as approved and affirmed includes a bad-conduct discharge or confinement for one year, will be promulgated by the officer exercising general court-martial jurisdiction over the probationer (Article 72(b)). The vacation of suspension of any other sentence may be promulgated by an appropriate convening authority under Article 72(c). *See* R.C.M. 1109.]''

CHANGES TO APPENDIX 18, REPORT OF PROCEEDINGS TO VACATE SUSPENSION OF A GENERAL COURT-MARTIAL OR OF A SPECIAL COURT-MARTIAL SENTENCE INCLUDING A BAD-CONDUCT DISCHARGE UNDER ARTICLE 72, UCMJ, AND R.C.M. 1109 (DD FORM 455), MANUAL FOR COURTS-MARTIAL, UNITED STATES

The title to Appendix 18 is amended to read as follows:

''**Report of Proceedings to Vacate Suspension of a General Court-Martial or of a Special Court-Martial Sentence Including a Bad-Conduct Discharge or Confinement for One Year Under Article 72, UCMJ, and R.C.M. 1109 (DD Form 455).**''.

CHANGES TO THE ANALYSIS ACCOMPANYING THE MANUAL FOR COURTS-MARTIAL, UNITED STATES.

1. *Changes to Appendix 21, the Analysis Accompanying the Rules for Courts-Martial, United States (Part II, MCM).*

a. The Analysis to R.C.M. 201(f) is amended by inserting after the second paragraph the following new paragraph:

''*2002 Amendment*: Subsections (f)(2)(B)(i) and (f)(2)(B)(ii) were amended to remove previous limitations and thereby implement the amendment to 10 U.S.C. § 819 (Article 19, UCMJ) contained in section 577 of the National Defense Authorization Act for Fiscal Year 2000, P. L. No. 106–65, 113 Stat. 512 (1999). Subject to limitations prescribed by the President, the amendment increased the jurisdictional maximum punishment at special courts-martial to confinement for one year and forfeitures not exceeding two-thirds pay per month for one year, vice the previous six-month jurisdictional limitation.''.

b. The Analysis to R.C.M. 701(b) is amended by inserting after the discussion of the *1991 Amendment* to subsection (b)(2) the following new paragraph:

''*2002 Amendment*: Subsection (b)(4) was amended to take into consideration the protections afforded by the new psychotherapist-patient privilege under Mil. R. Evid. 513.''

c. The Analysis to R.C.M. 707(a) is amended by inserting after the second paragraph the following new paragraph:

''*2002 Amendment*: *Burton* and its progeny were re-examined in *United States v. Kossman*, 38 M.J. 258 (C.M.A. 1993), where the Court of Military Appeals specifically overruled *Burton* and reinstated the earlier rule from *United States v. Tibbs*, 15 C.M.A. 350, 353, 35 C.M.R. 322, 325 (1965). *See Kossman*, 38 M.J. at 262. In *Kossman*, the Court reinstated the ''reasonable diligence'' standard in determining whether the prosecution's progress toward trial for a confined accused was sufficient to satisfy the speedy trial requirement of Article 10, UCMJ.''

d. The Analysis accompanying R.C.M. 806 is amended by adding at the end the following new paragraphs:

''*2002 Amendment*: Section (d) was added to codify the military judge's power to issue orders limiting trial participants' extrajudicial statements in appropriate cases. *See United States v. Garwood*, 16 M.J. 863, 868 (N–M.C.M.R. 1983) (finding military judge was justified in issuing restrictive order prohibiting extrajudicial statements by trial participants), *aff'd on other grounds*, 20 M.J. 148 (C.M.A. 1985), *cert. denied*, 474 U.S. 1005 (1985);

United States v. Clark, 31 M.J. 721, 724 (A.F.C.M.R. 1990) (suggesting, but not deciding, that the military judge properly limited trial participants' extrajudicial statements).

''The public has a legitimate interest in the conduct of military justice proceedings. Informing the public about the operations of the criminal justice system is one of the ''core purposes'' of the First Amendment. In the appropriate case where the military judge is considering issuing a protective order, absent exigent circumstances, the military judge must conduct a hearing prior to issuing such an order. Prior to such a hearing the parties will have been provided notice. At the hearing, all parties will be provided an opportunity to be heard. The opportunity to be heard may be extended to representatives of the media in the appropriate case.

''Section (d) is based on the first Recommendation Relating to the Conduct of Judicial Proceedings in Criminal Cases, included in the Revised Report of the Judicial Conference Committee on the Operation of the Jury System on the ''Free Press—Fair Trial'' Issue, 87 F.R.D. 519, 529 (1980), which was approved by the Judicial Conference of the United States on September 25, 1980. The requirement that the protective order be issued in writing is based on Rule for Courts-Martial 405(g)(6). Section (d) adopts a ''substantial likelihood of material prejudice'' standard in place of the Judicial Conference recommendation of a ''likely to interfere'' standard. The Judicial Conference's recommendation was issued before the Supreme Court's decision in *Gentile v. State Bar of Nev.*, 501 U.S. 1030 (1991). *Gentile*, which dealt with a Rule of Professional Conduct governing extrajudicial statements, indicates that a lawyer may be disciplined for making statements that present a substantial likelihood of material prejudice to an accused's right to a fair trial. While the use of protective orders is distinguishable from limitations imposed by a bar's ethics rule, the *Gentile* decision expressly recognized that the ''speech of lawyers representing clients in pending cases may be regulated under a less demanding standard than that established for regulation of the press in *Nebraska Press Ass'n v. Stuart*, 427 U.S. 539 (1976), and the cases which preceded it.'' 501 U.S. at 1074. The Court concluded that ''the 'substantial likelihood of material prejudice' standard constitutes a constitutionally permissible balance between the First Amendment rights of attorneys in pending cases and the State's interest in fair trials.'' *Id.* at 1075. *Gentile* also supports the constitutionality of restricting communications of non-lawyer participants in a court case. *Id.* at 1072–73 (citing *Seattle Times Co. v. Rhinehart*, 467 U.S. 20, 32–33 (1984)). Accordingly, a protective order issued under the ''substantial likelihood of material prejudice'' standard is constitutionally permissible.

''The first sentence of the discussion is based on the committee comment to the Recommendations Relating to the Conduct of Judicial Proceedings in Criminal Cases. *See* 87 F.R.D. at 530. For a definition of ''party,'' *see* R.C.M. 103(16). The second sentence of the discussion is based on the first of the Judicial Conference's recommendations concerning special orders. *See* 87 F.R.D. at 529. The third sentence of the discussion is based on the second of the Judicial Conference's recommendations, *id.* at 532, and on *United States v. Salameh*, 992 F.2d 445, 447 (2d Cir. 1993) (*per curiam*), and *In re Application of Dow Jones & Co.*, 842 F.2d 603, 611 & n.1 (2d Cir.), *cert. denied*, 488 U.S. 946 (1988). The fourth sentence is based on *Salameh*, 992 F.2d at 447. The fifth sentence is based on Rule for Courts-Martial 905(d).''.

e. The Analysis accompanying R.C.M. 1001(b)(3)(A) is amended by inserting the following at the end thereof:

''*2002 Amendment*: As previously written, R.C.M. 1001(b)(3)(A) offered little guidance about what it meant by ''civilian convictions.'' *See, e.g., United States v. White*, 47 M.J. 139, 140 (C.A.A.F. 1997); *United States v. Barnes*, 33 M.J. 468, 472–73 (C.M.A. 1992); *United States v. Slovacek*, 24 M.J. 140, 141 (CMA), *cert. denied*, 484 U.S. 855 (1987). The present rule addresses this void and intends to give the sentencing authority as

much information as the military judge determines is relevant in order to craft an appropriate sentence for the accused.

''Unlike most civilian courts, this rule does not allow admission of more extensive criminal history information, such as arrests. Use of such additional information is not appropriate in the military setting where court-martial members, not a military judge, often decide the sentence. Such information risks unnecessarily confusing the members.

''The present rule clarifies the term ''conviction'' in light of the complex and varying ways civilian jurisdictions treat the subject. The military judge may admit relevant evidence of civilian convictions without necessarily being bound by the action, procedure, or nomenclature of civilian jurisdictions. Examples of judicial determinations admissible as convictions under this rule include accepted pleas of *nolo contendere*, pleas accepted under *North Carolina v. Alford*, 400 U.S. 25 (1970), or deferred sentences. If relevant, evidence of forfeiture of bail that results in a judicial determination of guilt is also admissible, as recognized in *United States v. Eady*, 35 M.J. 15, 16 (C.M.A. 1992). While no time limit is placed upon the admissibility of prior convictions, the military judge should conduct a balancing test to determine whether convictions older than ten years should be admitted or excluded on the basis of relevance and fundamental fairness.

''The two central factors in this rule are (1) judicial determination of guilt and (2) assumption of guilt. Assumption of guilt is an all-inclusive term meaning any act by the accused in a judicial proceeding accepting, acknowledging, or admitting guilt. As long as either factor is present, the ''conviction'' is admissible, if relevant. Consequently, this rule departs from the holding in *United States v. Hughes*, 26 M.J. 119, 120 (C.M.A. 1988), where the accused pleaded guilty in a Texas court, but the judge did not enter a finding of guilty under state law allowing ''deferred adjudications.'' Under the present rule, the ''conviction'' would be admissible because the accused pleaded guilty in a judicial proceeding, notwithstanding the fact that the state judge did not enter a finding of guilty.

''In contrast, ''deferred prosecutions,'' where there is neither an admission of guilt in a judicial proceeding nor a finding of guilty, would be excluded. The rule also excludes expunged convictions, juvenile adjudications, minor traffic violations, foreign convictions, and tribal court convictions as matters inappropriate for or unnecessarily confusing to courts-martial members. What constitutes a ''minor traffic violation'' within the meaning of this rule is to be decided with reference only to federal law, and not to the laws of individual states. *See* U.S. Sentencing Guidelines Manual § 4A1.2(c)(2); ''What Constitutes 'Minor Traffic Infraction' Excludable From Calculation of Defendant's Criminal History under United States Sentencing Guideline § 4A1.2(c)(2),'' 113 A.L.R. Fed. 561 (1993).

''Additionally, because of the lack of clarity in the previous rule, courts sometimes turned to Mil. R. Evid. 609 for guidance. *See, e.g., Slovacek*, 24 M.J. at 141. We note that because the policies behind Mil. R. Evid. 609 and the present rule differ greatly, a conviction that may not be appropriate for impeachment purposes under Mil. R. Evid. 609, may nevertheless be admissible under the present rule.

''The Federal Sentencing Guidelines were consulted when drafting the present rule. Although informed by those guidelines, the present rule departs from them in many respects because of the wide differences between the courts-martial process and practice in federal district court.''.

f. The Analysis to R.C.M. 1003(b)(3) is amended by adding at the end the following new paragraph:

''*2002 Amendment*: The amendment clearly defines the authority of special and summary courts-martial to adjudge both fines and forfeitures. *See generally United States v. Tualla*, 52 M.J. 228 (2000).''

g. The Analysis accompanying R.C.M. 1003(b)(7) is amended by adding at the end the following new paragraph:

''*2002 Amendment*: This change resulted from the enactment of Article 56a, UCMJ, in section 581 of the National Defense Authorization Act for Fiscal Year 1998, Pub. L. No. 105–85, 111 Stat. 1629, 1759 (1997).''.

h. The Analysis accompanying R.C.M. 1004(e) is amended by adding at the end the following new paragraph:

''*2002 Amendment*: This change resulted from the enactment of Article 56a, UCMJ, in section 581 of the National Defense Authorization Act for Fiscal Year 1998, Pub. L. No. 105–85, 111 Stat. 1629, 1759 (1997).''.

i. The Analysis accompanying R.C.M. 1006(c) is amended by adding at the end the following new paragraph:

''*2002 Amendment*: This change to the discussion resulted from the enactment of Article 56a, UCMJ, in section 581 of the National Defense Authorization Act for Fiscal Year 1998, Pub. L. No. 105–85, 111 Stat. 1629, 1759 (1997).''.

j. The Analysis accompanying R.C.M. 1006(d) is amended by inserting after the analysis of subsection 3(A) following paragraph:

''*2002 Amendment*: Subsection (d)(4)(B) was amended as a result of the enactment of Article 56a, UCMJ, in section 581 of the National Defense Authorization Act for Fiscal Year 1998, Pub. L. No. 105–85, 111 Stat. 1629, 1759 (1997).''.

k. The Analysis accompanying R.C.M. 1009 is amended by adding at the end the following new paragraph:

''*2002 Amendment*: Subsection (e)(3)(B)(ii) was amended as a result of the enactment of Article 56a, UCMJ, in section 581 of the National Defense Authorization Act for Fiscal Year 1998, Pub. L. No. 105–85, 111 Stat. 1629, 1759 (1997).''.

l. The Analysis to R.C.M. 1103 (b)(2) is amended by adding at the end the following new paragraph:

''*2002 Amendment*: Subsection (b)(2)(B) was amended to implement the amendment to 10 U.S.C. § 819 (Article 19, UCMJ) contained in section 577 of the National Defense Authorization Act for Fiscal Year 2000, P. L. No. 106–65, 113 Stat. 512 (1999) increasing the jurisdictional maximum punishment at special courts-martial. R.C.M. 1103(b)(2)(B) was amended to prevent an inconsistent requirement for a verbatim transcript between a general court-martial and a special court-martial when the adjudged sentence of a general court-martial does not include a punitive discharge or confinement greater than six months, but does include forfeiture of two-thirds pay per month for more than six months but not more than 12 months.''.

m. The Analysis to R.C.M. 1103(c) is amended by adding at the end the following new paragraph:

''*2002 Amendment*: Subsection (c) was amended to implement the amendment to 10 U.S.C. § 819 (Article 19, UCMJ) contained in section 577 of the National Defense Authorization Act for Fiscal Year 2000, P. L. No. 106–65, 113 Stat. 512 (1999) increasing the jurisdictional maximum punishment at special courts-martial. R.C.M. 1103(c) was amended to conform the requirements for a verbatim transcript with the requirements of Article 19 for a 'complete record' in cases where the adjudged sentence includes a bad-conduct discharge, confinement for more than six months, or forfeiture of pay for more than six months.''.

n. The Analysis to R.C.M. 1103(f) is amended by adding at the end the following new paragraph:

''*2002 Amendment*: Subsection (f)(1) was amended to implement the amendment to 10 U.S.C. § 819 (Article 19, UCMJ) contained in section 577 of the National Defense Authorization Act for Fiscal Year 2000, P. L. No. 106§65, 113 Stat. 512 (1999) increasing the jurisdictional maximum punishment at special courts-martial. R.C.M. 1103(f)(1) was amended to include the additional limitations on sentence contained in Article 19, UCMJ.''.

o. The Analysis to R.C.M. 1104(a) is amended by adding at the end the following new paragraph:

''*2002 Amendment*: Subsection (a)(2)(A) was amended to implement the amendment to 10 U.S.C. § 819 (Article 19, UCMJ) contained in section 577 of the National Defense Authorization Act for Fiscal Year 2000, P. L. No. 106–65, 113 Stat. 512 (1999) increasing the jurisdictional maximum punishment at special courts-martial. R.C.M. 1104(a)(2)(A) was amended to ensure that the military judge authenticates all verbatim records of trial at special courts-martial.''.

p. The Analysis to R.C.M. 1104(e) is amended by adding at the end the following new paragraph:

''*2002 Amendment*: Subsection (e) was amended to implement the amendment to 10 U.S.C. § 819 (Article 19, UCMJ) contained in section 577 of the National Defense Authorization Act for Fiscal Year 2000, P. L. No. 106–65, 113 Stat. 512 (1999) increasing the jurisdictional maximum punishment at special courts-martial. This amendment reflects the change to R.C.M. 1106 for special court- martial with an adjudged sentence that includes confinement for one year.''.

q. The Analysis to R.C.M. 1106(a) is amended by adding at the end the following new paragraph:

''*2002 Amendment*: Subsection (a) was amended to implement the amendment to 10 U.S.C. § 819 (Article 19, UCMJ) contained in section 577 of the National Defense Authorization Act for Fiscal Year 2000, P. L. No. 106–65, 113 Stat. 512 (1999) increasing the jurisdictional maximum punishment at special courts-martial. This amendment requires all special courts-martial cases subject to appellate review to comply with this rule.''.

r. The Analysis to R.C.M. 1107(d) is amended by inserting after the first paragraph the following new paragraph:

''*2002 Amendment*: The Discussion accompanying subsection (d)(1) was amended to implement the amendment to 10 U.S.C. § 819 (Article 19, UCMJ) contained in section 577 of the National Defense Authorization Act for Fiscal Year 2000, P. L. No. 106–65, 113 Stat. 512 (1999) increasing the jurisdictional maximum punishment at special courts-martial. R.C.M. 1107(d)(4) was amended to include the additional limitations on sentence contained in Article 19, UCMJ.''.

s. The Analysis accompanying R.C.M. 1107(d) is amended by adding at the end the following new paragraphs:

''*2002 Amendment*: Subsection (d)(4) was amended as a result of the enactment of Article 56a, UCMJ, in section 581 of the National Defense Authorization Act for Fiscal Year 1998, Pub. L. No. 105–85, 111 Stat. 1629, 1759 (1997).

''Subsection (d)(5) is new. The amendment addresses the impact of Article 58b, UCMJ. In special courts-martial, where the cumulative impact of a fine and forfeitures, whether adjudged or by operation of Article 58b, would otherwise exceed the total dollar amount of forfeitures that could be adjudged at the special court-martial, the fine and/or adjudged forfeitures should be disapproved or decreased accordingly. *See generally United States v. Tualla*, 52 M.J. 228, 231–32 (2000).''

t. The Analysis to R.C.M. 1109 is amended by adding at the end the following new paragraphs:

''*2002 Amendment*: Subsection (e) was amended to implement the amendment to 10 U.S.C. § 819 (Article 19, UCMJ) contained in section 577 of the National Defense Authorization Act for Fiscal Year 2000, P. L. No. 106–65, 113 Stat. 512 (1999) increasing the jurisdictional maximum punishment at special courts-martial.

''(f) *Vacation of a suspended special court-martial sentence that includes a bad-conduct discharge or confinement for one year*. Subsection (f) was amended to implement the amendment to 10 U.S.C. ◆ 819 (Article 19, UCMJ) contained in section 577 of the National Defense Authorization Act for Fiscal Year 2000, P. L. No. 106–65, 113 Stat. 512 (1999) increasing

the jurisdictional maximum punishment at special courts-martial. This amendment reflects the decision to treat an approved sentence of confinement for one year, regardless of whether any period of confinement is suspended, as a serious offense, in the same manner as a suspended approved bad-conduct discharge at special courts-martial under Article 72, UCMJ, and R.C.M. 1109.''.

u. The Analysis to R.C.M. 1110(a) is amended by adding at the end the following new paragraph:

''*2002 Amendment*: Subsection (a) was amended to implement the amendment to 10 U.S.C. § 819 (Article 19, UCMJ) contained in section 577 of the National Defense Authorization Act for Fiscal Year 2000, P. L. No. 106–65, 113 Stat. 512 (1999) increasing the jurisdictional maximum punishment at special courts-martial.''.

v. The Analysis to R.C.M. 1111 is amended by adding at the end the following new paragraph:

''*2002 Amendment*: R.C.M. 1111(b) was amended to implement the amendment to 10 U.S.C. § 819 (Article 19, UCMJ) contained in section 577 of the National Defense Authorization Act for Fiscal Year 2000, P. L. No. 106–65, 113 Stat. 512 (1999) increasing the jurisdictional maximum punishment at special courts-martial. The amendment ensures all special courts-martial not requiring appellate review are reviewed by a judge advocate under R.C.M. 1112.''.

w. The Analysis to R.C.M. 1112 is amended by adding at the end the following new paragraph:

''*2002 Amendment*: R.C.M. 1112(a)(2) was amended to implement the amendment to 10 U.S.C. § 819 (Article 19, UCMJ) contained in section 577 of the National Defense Authorization Act for Fiscal Year 2000, P. L. No. 106–65, 113 Stat. 512 (1999) increasing the jurisdictional maximum punishment at special courts-martial. The amendment ensures all special courts-martial not requiring appellate review are reviewed by a judge advocate under R.C.M. 1112.''.

x. The Analysis to R.C.M. 1305 (d) is amended to read as follows:

''(d) *Forwarding copies of the record*. Subsection (1) is based on Article 60(b)(2). Subsection (2) is based on the third paragraph of paragraph 91c of MCM, 1969 (Rev.). Subsection (3) is self- explanatory.

''*2001 Amendment*: Subsection (d)(2) was amended to strike the reference to ''subsection (e)(1)'' and insert a reference to ''subsection (d)(1)'' to reflect the 1995 amendment that redesignated R.C.M. 1305(e) as R.C.M. 1305(d).''.

2. *Changes to Appendix 22, the Analysis Accompanying the Military Rules of Evidence (Part III, MCM).*

a. The Analysis to Mil. R. Evid. 413 is amended by adding at the end the following new paragraph:

''*2002 Amendment*: Federal Rule of Evidence 415 which created a similar character evidence rule for civil cases, became applicable to the Military Rules of Evidence on January 6, 1996, pursuant to Rule 1102. Federal Rule 415, however, is no longer applicable to the Military Rules of Evidence, as stated in Section 1 of Executive Order , 2002 Amendments to the Manual for Court-Martial, United States, (date) Rule 415 was deleted because it applies only to federal civil proceedings.''.

b. The Analysis to Mil. R. Evid. 414 is amended by adding at the end the following new paragraph:

''*2002 Amendment*: Federal Rule of Evidence 415 which created a similar character evidence rule for civil cases, became applicable to the Military Rules of Evidence on January 6, 1996, pursuant to Rule 1102. Federal Rule 415, however, is no longer applicable to the Military Rules of Evidence, as stated in Section 1 of Executive Order , 2002 Amendments to the Manual for Court-Martial, United States, (date) Rule 415 was deleted because it applies only to federal civil proceedings.''

c. The analysis to Mil. R. Evid. 615 is amended by adding at the end the following new paragraph:

''*2002 Amendment*: These changes are intended to extend to victims at courts-martial the same rights granted to victims by the Victims' Rights and Restitution Act of 1990, 42 U.S.C. § 10606(b)(4), giving crime victims '[t]he right to be present at all public court proceedings related to the offense, unless the court determines that testimony by the victim would be materially affected if the victim heard other testimony at trial,' and the Victim Rights Clarification Act of 1997, 18 U.S.C. § 3510, which is restated in subsection (5). For the purposes of this rule, the term 'victim' includes all persons defined as victims in 42 U.S.C. § 10607(e)(2), which means 'a person that has suffered direct physical, emotional, or pecuniary harm as a result of the commission of a crime, including'—(A) in the case of a victim that is an institutional entity, an authorized representative of the entity; and (B) in the case of a victim who is under 18 years of age, incompetent, incapacitated, or deceased, one of the following (in order of preference): (i) a spouse; (ii) a legal guardian; (iii) a parent; (iv) a child; (v) a sibling; (vi) another family member; or (vii) another person designated by the court. 'The victim's right to remain in the courtroom remains subject to other rules, such as those regarding classified information, witness deportment, and conduct in the courtroom. Subsection (4) is intended to capture only those statutes applicable to courts-martial.''.

3. *Changes to Appendix 23, the Analysis accompanying the Punitive Articles (Part IV, MCM).*

a. The Analysis to paragraph 27(e) is amended by adding at the end the following new paragraph:

''*2002 Amendment*: The monetary amount affecting the maximum punishments has been revised from $100 to $500 to account for inflation. The last change was in 1969 raising the amount to $100. The value has also been readjusted to realign it more closely with the division between felony and misdemeanor penalties in civilian jurisdictions. *See generally* American Law Institute, Model Penal Code and Commentaries § 223.1 (1980) (suggesting $500 as the value). The amendment also adds the phrase 'or any firearm or explosive' as an additional criterion. This is because, regardless of the intrinsic value of such items, the threat to the community is substantial when such items are wrongfully bought, sold, traded, dealt in or disposed.''.

b. The Analysis to paragraph 31(c)(6) is amended to read as follows:

''*2002 Amendment*: Subparagraph c(6), 'Statements made during an interrogation,' was removed in light of questions raised by the Court of Appeals for the Armed Forces in *United States v. Solis*, 46 M.J. 31, 35 (C.A.A.F. 1997). In Solis, the court said subparagraph c(6) could be viewed as serving at least three different purposes. It could be (1) an expansive description of dicta with no intent to limit prosecutions; (2) protection for an accused against overcharging; or (3) guidance for the conduct of investigations. Subparagraph c(6) was never intended to establish either procedural rights for an accused or internal guidelines to regulate government conduct. Subparagraph (c)(6) was based upon *United States v. Aronson*, 8 U.S.C.M.A. 525, 25 C.M.R. 29 (1957); *United States v. Washington*, 9 U.S.C.M.A. 131, 25 C.M.R. 393 (1958) and *United States v. Davenport*, 9 M.J. 364 (C.M.A. 1980) and was intended merely to describe the rule developed in those cases that a false statement to a law enforcement agent, when made by a servicemember without an independent duty to speak, was not 'official' and therefore not within the purview of Article 107. The subparagraph is removed because the position of the Court of Military Appeals in the three decisions noted above was abandoned in *United States v. Jackson*, 26 M.J. 377 (C.M.A. 1988) and the deleted paragraph no longer accurately describes the current state of the law.''.

c. The Analysis to paragraph 32(e) is amended by adding at the end the following new paragraph:

''*2002 Amendment*: The monetary amount affecting the maximum punishments has been revised from $100 to $500 to account for inflation. The last change was in 1969 raising the amount to $100. The value has also been readjusted to realign it more closely with the division between felony

and misdemeanor penalties in civilian jurisdictions. *See generally* American Law Institute, Model Penal Code and Commentaries § 223.1 (1980) (suggesting $500 as the value). Although the monetary amount affecting punishment in 18 U.S.C. § 1361, *Government property or contracts*, and 18 U.S.C. § 641, *Public money, property or records*, was increased from $100 to $1000 pursuant to section 606 of the Economic Espionage Act of 1996, P. L. No. 104–294, 110 Stat. 3488 (1996), a value of $500 was chosen to maintain deterrence, simplicity, and uniformity for the Manual's property offenses.''.

d. The Analysis to paragraph 33(e) is amended by adding at the end the following new paragraph:

''*2002 Amendment*: The monetary amount affecting the maximum punishments has been revised from $100 to $500 to account for inflation. The last change was in 1969 raising the amount to $100. The value has also been readjusted to realign it more closely with the division between felony and misdemeanor penalties in civilian jurisdictions. *See generally* American Law Institute, Model Penal Code and Commentaries § 223.1 (1980) (suggesting $500 as the value).''.

e. The Analysis to paragraph 46(c) is amended by adding at the end the following new paragraph:

''*2002 Amendment*: Subparagraph c(1)(h)(vi) is new. It was added to provide guidance on how unauthorized credit, debit, or electronic transactions should usually be charged. *See United States v. Duncan*, 30 M.J. 1284, 289 (N.M.C.M.R. 1990) (citing *United States v. Jones*, 29 C.M.R. 651 (A.B.R. 1960), *petition denied*, 30 C.M.R. 417 (C.M.A. 1960)) (regarding thefts from ATM machines). Alternative charging theories are also available, *see United States v. Leslie*, 13 M.J. 170 (C.M.A. 1982); *United States v. Ragins*, 11 M.J. 42 (C.M.A. 1981); *United States v. Schaper*, 42 M.J. 737 (A.F. Ct. Crim. App. 1995); and *United States v. Christy*, 18 M.J. 688 (N.M.C.M.R. 1984). The key under Article 121 is that the accused wrongfully obtained goods or money from a person or entity with a superior possessory interest.''.

f. The Analysis to paragraph 46(e) is amended by adding at the end the following new paragraph:

''*2002 Amendment*: The monetary amount affecting the maximum punishments has been revised from $100 to $500 to account for inflation. The last change was in 1969 raising the amount to $100. The value has also been readjusted to realign it more closely with the division between felony and misdemeanor penalties in civilian jurisdictions. *See generally* American Law Institute, Model Penal Code and Commentaries § 223.1 (1980) (suggesting $500 as the value). Although the monetary amount effecting punishment in 18 U.S.C. § 1361, *Government property or contracts*, and 18 U.S.C. § 641, *Public money, property or records*, was increased from $100 to $1000 pursuant to section 606 of the Economic Espionage Act of 1996, P. L. No. 104–294, 110 Stat. 3488 (1996), a value of $500 was chosen to maintain deterrence, simplicity, and uniformity for the Manual's property offenses.''.

g. The Analysis to paragraph 49(e) is amended by adding at the end the following new paragraph:

''*2002 Amendment*: The monetary amount affecting the maximum punishments has been revised from $100 to $500 to account for inflation. The last change was in 1969 raising the amount to $100. The value has also been readjusted to realign it more closely with the division between felony and misdemeanor penalties in civilian jurisdictions. *See generally* American Law Institute, Model Penal Code and Commentaries § 223.1 (1980) (suggesting $500 as the value).''.

h. The Analysis to paragraph 52(e) is amended by adding at the end the following new paragraph:

''*2002 Amendment*: The monetary amount affecting the maximum punishments has been revised from $100 to $500 to account for inflation. The last change was in 1969 raising the amount to $100. The value has also been readjusted to realign it more closely with the division between felony and misdemeanor penalties in civilian jurisdictions. *See generally* American

Law Institute, Model Penal Code and Commentaries § 223.1 (1980) (suggesting $500 as the value). A value of $500 was chosen to maintain deterrence, simplicity, and uniformity for the Manual's property offenses. 18 U.S.C. § 81, *Arson within special maritime and territorial jurisdiction*, no longer grades the offense on the basis of value.''.

i. The Analysis to paragraph 58(e) is amended by adding at the end the following new paragraph:

''*2002 Amendment*: The monetary amount affecting the maximum punishments has been revised from $100 to $500 to account for inflation. The last change was in 1969 raising the amount to $100. The value has also been readjusted to realign it more closely with the division between felony and misdemeanor penalties in civilian jurisdictions. *See generally* American Law Institute, Model Penal Code and Commentaries § 223.1 (1980) (suggesting $500 as the value).''.

j. The Analysis to paragraph 62. Article 134 ' (Adultery) is amended to read as follows:

''c. *Explanation*. (1) Subparagraph c(2) is based on *United States. v. Snyder*, 4 C.M.R. 15 (1952); *United States v. Ruiz*, 46 M.J. 503 (A. F. Ct. Crim. App. 1997); *United States v. Green*, 39 M.J. 606 (A.C.M.R. 1994); *United States v. Collier*, 36 M.J. 501 (A.F.C.M.R. 1992); *United States v. Perez*, 33 M.J. 1050 (A.C.M.R. 1991); *United States v. Linnear*, 16 M.J. 628 (A.F.C.M.R. 1983); Part IV, paragraph 60c(2)(a) of MCM. Subparagraph c(3) is based on *United States v. Poole*, 39 M.J. 819 (A.C.M.R. 1994). Subparagraph c(4) is based on *United States v. Fogarty*, 35 M.J. 885 (A.C.M.R. 1992); Military Judges' Benchbook, DA PAM 27–9, paragraph 3–62–1 and 5–11–2 (30 Sep. 1996). *See* R.C.M. 916(j) and (l)(1) for a general discussion of mistake of fact and ignorance, which cannot be based on a negligent failure to discover the true facts.

''(2) When determining whether adulterous acts constitute the offense of adultery under Article 134, commanders should consider the listed factors. Each commander has discretion to dispose of offenses by members of the command. As with any alleged offense, however, under R.C.M. 306(b) commanders should dispose of an allegation of adultery at the lowest appropriate level. As the R.C.M. 306(b) discussion states, many factors must be taken into consideration and balanced, including, to the extent practicable, the nature of the offense, any mitigating or extenuating circumstances, the character and military service of the military member, any recommendations made by subordinate commanders, the interests of justice, military exigencies, and the effect of the decision on the military member and the command. The goal should be a disposition that is warranted, appropriate, and fair. In the case of officers, also consult the explanation to paragraph 59 in deciding how to dispose of an allegation of adultery.''.

k. The Analysis to paragraph 78(e) is amended by adding at the end the following new paragraph:

''*2002 Amendment*: The monetary amount affecting the maximum punishments has been revised from $100 to $500 to account for inflation. The last change was in 1969 raising the amount to $100. The value has also been readjusted to realign it more closely with the division between felony and misdemeanor penalties in civilian jurisdictions. *See generally* American Law Institute, Model Penal Code and Commentaries § 223.1 (1980) (suggesting $500 as the value).''.

l. The Analysis to paragraph 106(e) is amended by adding at the end the following new paragraph:

''*2002 Amendment*: The monetary amount affecting the maximum punishments has been revised from $100 to $500 to account for inflation. The last change was in 1969 raising the amount to $100. The value has also been readjusted to realign it more closely with the division between felony and misdemeanor penalties in civilian jurisdictions. *See generally* American Law Institute, Model Penal Code and Commentaries § 223.1 (1980) (suggesting $500 as the value).''.

[FR Doc. 02–9536
Filed 4–16–02; 8:45 am]
Billing code 5000–04–P

Rules and Regulations

Federal Register

Vol. 67, No. 74

Wednesday, April 17, 2002

This section of the FEDERAL REGISTER contains regulatory documents having general applicability and legal effect, most of which are keyed to and codified in the Code of Federal Regulations, which is published under 50 titles pursuant to 44 U.S.C. 1510.

The Code of Federal Regulations is sold by the Superintendent of Documents. Prices of new books are listed in the first FEDERAL REGISTER issue of each week.

FEDERAL DEPOSIT INSURANCE CORPORATION

12 CFR Part 304

RIN 3064–AC52

Technical Amendments to FDIC Regulation Relating to Forms, Instructions, and Reports

AGENCY: Federal Deposit Insurance Corporation.

ACTION: Final rule.

SUMMARY: The FDIC is revising its regulation on forms, instructions, and reports to make the information contained in it current. The revised regulation includes current FDIC addresses and websites, and updated descriptions of FDIC forms.

EFFECTIVE DATE: April 17, 2002.

FOR FURTHER INFORMATION CONTACT: Thomas E. Nixon, Senior Program Attorney, Office of the Executive Secretary, (202) 898–8766; Robert Walsh, Manager, Policy and Program Development Section, Division of Supervision (202) 898–6911; Philip Houle, Counsel, Legal Division (202) 898–3722, Federal Deposit Insurance Corporation, 550 17th Street, NW., Washington, DC 20429.

SUPPLEMENTARY INFORMATION:

I. Background and Current Actions

The FDIC's regulation, ''Forms, Instructions, and Reports'' informs the public where it may obtain forms and instructions for reports, applications and other submittals used by the FDIC and describes certain forms used by the FDIC, including the Consolidated Reports of Condition and Income (Call Report), that are not described elsewhere in FDIC regulations. It also implements requirements of the Federal Deposit Insurance Corporation Improvement Act (FDICIA), Public Law 102–242 (Dec. 19, 1991), which require the inclusion of ''off balance sheet'' items in any financial reports from an insured institution to a Federal banking agency and for the FDIC to collect information on small business and small farm lending from insured depository institutions in their annual reports of condition.[1]

This final rule updates the regulation to provide current information. It does not change any regulatory requirement imposed on the public by the FDIC, including any reporting or record keeping requirement. The FDIC is also publishing today in this document, directly following the final rule, a list of forms used by the FDIC that provides form numbers, descriptive titles, Paperwork Reduction Act clearance numbers, and citations to regulations that refer to the forms. This ''Forms Used by the FDIC'' list will not be codified into the Code of Federal Regulations, but will be periodically updated by the FDIC and made available to the public.

II. Public Comment Waiver and Effective Date

As noted, this final rule updates information in part 304 and does not affect any regulatory requirement imposed by the FDIC on the public. The changes are matters of ''agency organization, procedure, or practice'' and are thus not subject to the general requirement of the Administrative Procedure Act (APA) for notice and comment, pursuant to 5 U.S.C. 553(b)(A). The changes are also routine, technical, non-substantive and insignificant in nature and impact. They are also inconsequential to the industry and the public, except to the extent that they correct errors, update information and improve access to information concerning forms, instructions and reports required by the FDIC. Thus, the FDIC finds, for good cause, that the APA notice-and-comment provisions are unnecessary. 5 U.S.C. 553(b)(B).

This final rule is also effective immediately, because: (a) The changes are routine, technical, and not substantive; (b) the public does not need a delayed period of time to conform or adjust; and (c) the current part 304 contains inaccurate information which should be corrected as promptly as possible. Therefore, it is determined that good cause exists for making these amendments effective on publication in the **Federal Register**, pursuant to 5 U.S.C. 553(d)(3).

III. Paperwork Reduction Act

This final rule does not create or modify any collection of information pursuant to the Paperwork Reduction Act (44 U.S.C. 3501 *et seq.*). Consequently, no information has been submitted to the Office of Management and Budget for review.

IV. Regulatory Flexibility Act

A regulatory flexibility analysis under the Regulatory Flexibility Act (RFA) is required only when an agency must publish a notice of proposed rulemaking. 5 U.S.C. 603 and 604. As already noted, the FDIC has determined that publication of a notice of proposed rulemaking is not necessary here. Accordingly, the RFA does not require a regulatory flexibility analysis.

V. Small Business Regulatory Enforcement Fairness Act

The Small Business Regulatory Enforcement Fairness Act of 1996 (SBREFA) (Pub. L. 104–121) provides generally for agencies to report rules to Congress for review. The reporting requirement is triggered when the FDIC issues a final rule as defined by the APA. 5 U.S.C. 551. Because the FDIC is issuing a final rule as defined by the APA, the FDIC will file the reports required by the SBREFA.

The Office of Management and Budget has determined that this proposal does not constitute a ''major'' rule as defined by SBREFA.

VI. Assessment of Federal Regulations and Policies on Families

The FDIC has determined that this final rule will not affect family well-being within the meaning of section 654 of the Treasury and General Government Appropriations Act, 1999, Public Law 105–277, 112 Stat. 2681 (1998).

List of Subjects in 12 CFR Part 304

Bank deposit insurance, Banks, banking, Freedom of information, Reporting and recordkeeping requirements.

Adoption of Technical Amendments

For the reasons set forth in the preamble, the FDIC hereby revises part

[1] FDICIA section 121, 12 U.S.C. 1831n(a)(3)(C) and FDICIA section 122, 12 U.S.C. 1817 note.

304 of chapter III of title 12 of the Code of Federal Regulations, as set forth below:

PART 304—FORMS, INSTRUCTIONS, AND REPORTS

Sec.
304.1 Purpose.
304.2 Where to obtain forms and instructions.
304.3 Reports.

Authority: 5 U.S.C. 552; 12 U.S.C. 1817, 1831, 1867.

§ 304.1 Purpose.

Part 304 informs the public where it may obtain forms and instructions for reports, applications, and other submittals used by the FDIC, and also describes certain forms that are not described elsewhere in FDIC regulations.

§ 304.2 Where to obtain forms and instructions.

Forms and instructions used in connection with applications, reports, and other submittals used by the FDIC can be obtained by contacting the FDIC Public Information Center (801 17th Street, NW., Washington, DC 20434; telephone: 800–276–6003 or 202–416–6940), except as noted below in § 304.3. In addition, many forms and instructions can be obtained from FDIC regional offices. A list of FDIC regional offices can be obtained from the FDIC Public Information Center or found at the FDIC's web site at http://www.fdic.gov, or in the directory of FDIC Law, Regulations and Related Acts published by the FDIC.

§ 304.3 Reports.

(a) Consolidated Reports of Condition and Income, Forms FFIEC 031 and 041. Pursuant to section 7(a) of the Federal Deposit Insurance Act (12 U.S.C. 1817(a)), every national bank, state member bank, and insured state nonmember bank is required to file Consolidated Reports of Condition and Income (also known as the Call Report) in accordance with the instructions for these reports. All assets and liabilities, including contingent assets and liabilities, must be reported in, or otherwise taken into account in the preparation of, the Call Report. The FDIC uses Call Report data to calculate deposit insurance assessments and monitor the condition, performance, and risk profile of individual banks and the banking industry. Reporting banks must also submit annually such information on small business and small farm lending as the FDIC may need to assess the availability of credit to these sectors of the economy. The report forms and instructions can be obtained from the Division of Supervision, FDIC, Washington, DC 20429.

(Approved by the Office of Management and Budget under control number 3064–0052)

(b) Report of Assets and Liabilities of U.S. Branches and Agencies of Foreign Banks, Form FFIEC 002. Pursuant to section 7(a) of the Federal Deposit Insurance Act (12 U.S.C. 1817(a)), every insured U.S. branch of a foreign bank is required to file a Report of Assets and Liabilities of U.S. Branches and Agencies of Foreign Banks in accordance with the instructions for the report. All assets and liabilities, including contingent assets and liabilities, must be reported in, or otherwise taken into account in the preparation of the report. The FDIC uses the reported data to calculate deposit insurance assessments and monitor the condition, performance, and risk profile of individual insured branches and the banking industry. Insured branches must also submit annually such information on small business and small farm lending as the FDIC may need to assess the availability of credit to these sectors of the economy. Because the Board of Governors of the Federal Reserve System collects and processes this report on behalf of the FDIC, the report forms and instructions can be obtained from Federal Reserve District Banks or through the web site of the Federal Financial Institutions Examination Council,

http://www.ffiec.gov/.

(Approved by the Office of Management and Budget under control number 7100–0032)

(c) Summary of Deposits, Form FDIC 8020/05. Form 8020/05 is a report on the amount of deposits for each authorized office of an insured bank with branches; unit banks do not report. Reports as of June 30 of each year must be submitted no later than the immediately succeeding July 31. The report forms and the instructions for completing the reports will be furnished to all such banks by, or may be obtained upon request from, the Division of Supervision, FDIC, 550 17th Street, NW., Washington, DC 20429.

(Approved by the Office of Management and Budget under control number 3064–0061)

(d) Notification of Performance of Bank Services, Form FDIC 6120/06. Pursuant to Section 7 of the Bank Service Company Act (12 U.S.C. 1867), as amended, FDIC supervised banks must notify the agency about the existence of a service relationship within thirty days after the making of the contract or the performance of the service, whichever occurs first. Form FDIC 6120/06 may be used to satisfy the notice requirement. The form contains identification, location and contact information for the bank, the servicer, and a description of the services provided. In lieu of the form, notification may be provided by letter. Either the form or the letter containing the notice information must be submitted to the regional director—Division of Supervision of the region in which the bank's main office is located.

(Approved by the Office of Management and Budget under control number 3064–0029)

Dated at Washington, DC, this 9th day of April, 2002.

By order of the Board of Directors.

Federal Deposit Insurance Corporation.

Robert E. Feldman,

Executive Secretary.

[''Forms Used by the FDIC'' will not appear in the Code of Federal Regulations.]

FORMS USED BY THE FDIC

Form	Title	Reference	Paperwork Reduction Act Clearance Number
FDIC 1600/04	Background Investigation Questionnaire for Contractor Personnel and Management Officials.	12 CFR 366.6	3064–0072
FDIC 1600/07	Background Investigation Questionnaire for Contractors	12 CFR 366.6	3064–0072
FDIC 1600/10	Notice and Authorization Pertaining to Consumer Reports	12 CFR 366.6	3064–0072

FORMS USED BY THE FDIC—Continued

Form	Title	Reference	Paperwork Reduction Act Clearance Number
FDIC 2100/14	Applicant Background Questionnaire	5 USC 7201; 5 CFR 720.07.	3064–0138
FDIC 2120/16	Applicant Certification Statement	12 CFR 336.4	3064–0121
FDIC 3700/04A	Contractor Representations and Certifications	12 CFR 366.6	3064–0072
FDIC 3700/12	Eligibility Representations and Certifications	12 CFR 366.6	3064–0072
FDIC 3700/13	Contractor Application	12 CFR 366.6	3064–0072
FDIC 3700/29	Contractor Past Performance RFP Reference Check Questionnaire	12 CFR 366.6	3064–0072
FDIC 3700/33	Contractor Application Revision Request	12 CFR 366.6	3064–0072
FDIC 3700/44	Leasing Representations and Certifications	12 USC 1819, 1821	3064–0072
FDIC 5000/24	Amended Appellate Budget Form	12 CFR 366.6	3064–0122
FDIC 5000/25	Amended Bankruptcy Budget Form	12 CFR 366.6	3064–0122
FDIC 5000/26	Non-Litigation/Transactional Form	12 CFR 366.6	3064–0122
FDIC 5000/27	Appellate Budget Form	12 CFR 366.6	3064–0122
FDIC 5000/28	Bankruptcy Budget Worksheet	12 CFR 366.6	3064–0122
FDIC 5000/29	Amended Bankruptcy Worksheet	12 CFR 366.6	3064–0122
FDIC 5000/31	Amended Litigation PLS Adversary Budget Form	12 CFR 366.6	3064–0122
FDIC 5000/32	Amended Litigation/PLS/Adversary Budget Worksheet	12 CFR 366.6	3064–0122
FDIC 5000/33	Amended Non-Litigation/Transactional Budget Form	12 CFR 366.6	3064–0122
FDIC 5000/34	Bankruptcy Budget Form	12 CFR 366.6	3064–0122
FDIC 5000/35	Litigation/PLS Adversary Budget Form	12 CFR 366.6	3064–0122
FDIC 5000/36	Litigation/PLS/Adversary Budget Worksheet	12 CFR 366.6	3064–0122
FDIC 6120/06	Notification of Performance of Bank Services	12 CFR 304.3(d)	3064–0029
FDIC 6200/05	Application for Federal Deposit Insurance	12 CFR 303.21	3064–0001
FDIC 6200/07	Application for Federal Deposit Insurance for Operating Noninsured Institutions.	12 CFR 303.21	.....
FDIC 6200/09	Application for Consent to Exercise Trust Powers	12 CFR 303.242	3064–0025
FDIC 6342/12	Request for Deregistration, Registered Transfer Agent	12 CFR 341.5	3064–0027
FDIC 6420/07	Certified Statement for Deposit Insurance	12 CFR 327.2	3064–0057
FDIC 6440/12	Loan/Application Register	12 CFR 338.8	7100–0247
FDIC 6710/06	Suspicious Activity Report	12 CFR 353.3	3064–0077
FDIC 6710/07	Application Pursuant to Section 19 of the Federal Deposit Insurance Act.	12 CFR 303.221	3064–0018
FDIC 6800/03	Initial Statement of Beneficial Ownership of Securities (Form F–7)	12 CFR 335.111, 335.611.	3064–0030
FDIC 6800/04	Statement of Changes in Beneficial Ownership (Form F–8)	12 CFR 335.111, 335.612.	3064–0030
FDIC 6800/05	Annual Statement of Changes in Beneficial Ownership (Form F–8A)	12 CFR 335.111, 335.613.	3064–0030
FDIC 8020/05	Summary of Deposits	12 CFR 304.3(c)	3064–0061
FFIEC 002	Report of Assets and Liabilities of U.S. Branches and Agencies of Foreign Banks.	12 CFR 304.3(b)	7100–0032
FFIEC 004	Report on Indebtedness of Executive Officers and Principal Shareholders and their Related Interests to Correspondent Banks.	12 CFR 349.3	3064–0023
FFIEC 009	Country Exposure Report	12 CFR 347.305	3064–0017
FFIEC 009a	Country Exposure Information Report	12 CFR 347.305	3064–0017
FFIEC 019	Country Exposure Report for U.S. Branches and Agencies of Foreign Banks.	12 USC 3105, 3108	7100–0213
FFIEC 030	Foreign Branch Report of Condition	12 CFR 347.110	3064–0011
FFIEC 031	Consolidated Reports of Condition and Income for a Bank with Domestic and Foreign Offices.	12 CFR 304.3(a)	3064–0052
FFIEC 041	Consolidated Reports of Condition and Income for a Bank with Domestic Offices Only.	12 CFR 304.3(a)	3064–0052
GFIN	Notice of Government Securities Broker or Government Securities Dealer Activities to be Filed by a Financial Institution Under Section 15C(a)(1)(B).	15 USC 78o–5	3064–0093
GFIN–W	Notice by Financial Institutions of Termination of Activities as a Government Securities Broker or Government Securities Dealer.	15 USC 78o–5	3064–0093
GFIN–4	Disclosure Form for Person Associated With a Financial Institution Government Securities Broker or Dealer.	15 USC 78o–5	3064–0093
GFIN–5	Uniform Termination Notice for Person Associated With a Financial Institution Government Securities Broker or Dealer.	15 USC 78o–5	3064–0093
MSD 4	Uniform Application for Municipal Securities Principal or Municipal Securities Representative Associated With a Bank Municipal Securities Dealer.	15 USC 78o–4	3064–0022
MSD 5	Uniform Termination Notice for Municipal Securities Principal or Municipal Securities Representative Associated With a Bank Municipal Securities Dealer.	15 USC 78o–4	3064–0022
TA–1	Transfer Agent Registration and Amendment Form	12 CFR 341.3–341.4	3064–0026

FORMS USED BY THE FDIC—Continued

Form	Title	Reference	Paperwork Reduction Act Clearance Number
	Certification of Income Eligibility for the Affordable Housing Program	12 USC 1831q	3064–0116
	Interagency Biographical and Financial Report	12 USC 1815(a), 1816, 1817(j).	3064–0006
	Interagency Bank Merger Act Application	12 CFR 303.60–303.67	3064–0015
	Interagency Notice of Change in Director or Senior Executive Officer	12 CFR 303.100–303.104.	3064–0097
	Interagency Notice of Change in Control	12 CFR 303.80–303.87	3064–0019
	Purchaser Eligibility Certification	12 CFR 340.7	3064–0135

[FR Doc. 02–9241 Filed 4–16–02; 8:45 am]

BILLING CODE 6714–01–P

FEDERAL HOUSING FINANCE BOARD

12 CFR Part 951

[No. 2002–15]

RIN 3069–AB14

Affordable Housing Program Amendments

AGENCY: Federal Housing Finance Board.

ACTION: Final rule.

SUMMARY: The Federal Housing Finance Board (Finance Board) is amending its regulation governing the operation of the Affordable Housing Program (AHP) to improve the operation and effectiveness of the AHP. The changes include: making the requirements for approval of post-completion project modifications the same as the current requirements for pre-completion project modifications; allowing the Federal Home Loan Banks (Banks) to define ''homeless household'' for purposes of scoring applications for AHP subsidies to finance housing for such households; allowing the Banks to award scoring points to projects using Federal government properties, and to projects using non-Federal government properties conveyed for an amount significantly below their fair market value; permitting the Banks to allow members or project sponsors to re-use repaid AHP direct subsidy to assist another AHP-eligible household to purchase or rehabilitate an owner-occupied unit in the same project; permitting a Bank to allocate up to the greater of $3 million or 25 percent of its annual required AHP contribution for the subsequent year to the current year's AHP competitive application program; adding the Federal Financial Institutions Examination Council as a source of area median income data that may be used to determine household income eligibility; removing the requirement that the amount of AHP subsidies offered by a Bank in each funding period must be comparable; removing the requirement that the Banks must determine the feasibility of projects before their applications may be scored; and allowing the Banks up to one year and 120 days after completion of a rental project to review the documentation received from the project owner for project compliance.

EFFECTIVE DATE: The final rule shall be effective on May 17, 2002.

FOR FURTHER INFORMATION CONTACT: Charles E. McLean, Deputy Director, (202) 408–2537, Melissa L. Allen, Program Analyst, (202) 408–2524, Office of Policy, Research and Analysis; or Sharon B. Like, Senior Attorney-Advisor, (202) 408–2930, Office of General Counsel, Federal Housing Finance Board, 1777 F Street, NW., Washington, DC 20006.

SUPPLEMENTARY INFORMATION:

I. Statutory and Regulatory Background

Section 10(j)(1) of the Federal Home Loan Bank Act (Bank Act) requires each Bank to establish a program to subsidize the interest rate on advances to members of the Bank System engaged in lending for long-term, low- and moderate-income, owner-occupied and affordable rental housing at subsidized interest rates. *See* 12 U.S.C. 1430(j)(1). The Finance Board is required to promulgate regulations governing the AHP. *See* 12 U.S.C. 1430(j)(1), (9). The Finance Board's existing regulation governing the operation of the AHP, which made comprehensive revisions to the AHP, was adopted in August 1997 and became effective January 1, 1998. *See* 62 FR 41812 (August 4, 1997) (*codified at* 12 CFR part 951).

Various amendments have been made to the AHP regulation since 1998 in order to clarify AHP requirements and improve the operation and effectiveness of the AHP. The Banks, members, project sponsors and Finance Board staff have, over the course of implementation of the AHP, identified additional amendments that it is believed would improve the operation and effectiveness of the AHP. On December 27, 2001, the Finance Board published in the **Federal Register** a proposed rule that would amend the AHP regulation to improve the operation and effectiveness of the AHP. *See* 66 FR 66813 (December 27, 2001). The proposed rule provided for a 60-day comment period.

The Finance Board received comments on the proposed rule from 41 parties. Commenters included: 9 Banks; 2 Bank Affordable Housing Advisory Councils; 1 financial services holding company representing a Bank member; 25 Native American tribal housing authorities, tribally designated housing entities, and tribes; 1 Native American housing trade association; 1 community development lender; 1 nonprofit housing lender; and 1 community development corporations trade association. Commenters generally supported some or all of the proposed amendments. Comments that raised issues beyond the scope of the proposed rule changes are not addressed in this final rule, but will be considered by the Finance Board in any future rulemaking under the AHP. The provisions of the proposed rule on which significant comments were received are discussed below.

II. Analysis of Final Rule

A. Definitions—§ 951.1

1. Removal of Definition of ''Homeless Household''—§ 951.1

For the reasons discussed in section F. below, the final rule removes the definition of ''homeless household'' in § 951.1 of the AHP regulation, and allows each Bank to define the term for purposes of scoring applications for AHP subsidy to finance housing for

homeless households under § 951.6(b)(4)(iv)(D).

2. Inclusion of FFIEC in Definition of ''Median Income for the Area''—§ 951.1

Under the AHP regulation, households are eligible for AHP subsidies if they have an income at or below the targeted income level, expressed as a percentage of median income for the area, specified in the AHP application. *See* 12 CFR 951.5(b)(1), 951.6(b)(4)(iv)(C). Section 951.1 of the AHP regulation defines ''median income for the area'' generally as one or more of the following, as determined by the Bank:

a. The median income for the area, as published annually by the U.S. Department of Housing and Urban Development (HUD);

b. The applicable median family income, as determined under 26 U.S.C. 143(f) and published by a state mortgage revenue bond program;

c. The median income for the area, as published by the U.S. Department of Agriculture; or

d. The median income for any definable geographic area, as published by a Federal, state or local government entity for purposes of that entity's housing programs, and approved by the Finance Board, at the request of a Bank, for use under the AHP. *See* 12 CFR 951.1.

As discussed in the **SUPPLEMENTARY INFORMATION** section of the proposed rule, the Federal Financial Institutions Examination Council (FFIEC) is a Federal government source that publishes updated median income data for areas, based on existing HUD median income data. Since the FFIEC median income data is derived from existing HUD data, which is a permissible source of area median income data for determining the income eligibility of households under the AHP regulation, the Finance Board believes that the Banks should also be able to use such FFIEC data for determining household income eligibility. This change would be consistent with the Finance Board's recent amendment to the definition of ''median income for the area'' in its Community Investment Cash Advance (CICA) Programs Regulation to include FFIEC as a source of median income data that may be used to determine income eligibility for projects and households funded under CICA programs. *See* 66 FR 50293 (October 3, 2001) (*codified at* 12 CFR 952.3).

Therefore, under the proposed rule, new paragraphs (1)(ii) and (2)(ii) would be added to the existing definition of ''median income for the area'' in § 951.1 to include FFIEC as a data source, and the remaining paragraphs would be renumbered accordingly. Commenters generally supported this proposed change.

Accordingly, the final rule adopts, without change, the proposed amendments to § 951.1 to include FFIEC as a source of median income data.

B. Permitting Banks to Allocate AHP Funds From the Subsequent Year's Required Annual AHP Contribution to the Current Year's Competitive Application Program—§ 951.3(a)(2)

The AHP regulation provides that in cases where the amount of AHP homeownership set-aside funds applied for by members in a given year exceeds the amount available for that year, a Bank may allocate up to the greater of $3 million or 25 percent of its annual required AHP contribution for the subsequent year to the current year's homeownership set-aside programs. *See* 12 CFR 951.3(a)(1). The AHP regulation does not allow the Banks to make a similar allocation of AHP funds from the subsequent year's required annual AHP contribution to the current year's AHP competitive application program. *See* 12 CFR 951.3(a)(2).[1]

As discussed in the **SUPPLEMENTARY INFORMATION** section of the proposed rule, a number of Banks have indicated that there may be special circumstances in which it would be beneficial to have the flexibility to allocate a portion of the subsequent year's required AHP contribution to fund additional applications in the current year under the competitive application program. Such special circumstances could include natural or man-made disasters or other emergencies, or sudden changes in market conditions or demand caused by significant economic changes, that increase the need for funds for affordable housing projects in the current year. Another circumstance might be a demand for additional AHP funds for use in conjunction with a special allocation of housing funds made by a Federal, state or local government agency in the current year.

Several Banks also have raised the issue that a change in generally accepted accounting principles in the United States, contained in Statement of Financial Accounting Standards (SFAS) 133, could cause fluctuations in a Bank's net earnings and thereby cause fluctuations in the Bank's required AHP contributions from year to year. Allowing the Banks to allocate AHP funds from the subsequent year's required AHP contribution to the current year under the competitive application program would give the Banks flexibility to mitigate some of these year-to-year fluctuations in required AHP contributions.

The Finance Board agrees that allowing allocation of AHP funds from the subsequent year's required AHP contribution to the current year's competitive application program could be beneficial to the AHP. The Finance Board recognizes that allowing such allocation of AHP funds may result in fewer AHP funds available for the subsequent year. However, the overall amount of AHP funds available would not decrease; a portion of the funds would simply be available in the current year rather than in the subsequent year. Moreover, there is no guarantee in any case that the amount of AHP funds available in a given year will be the same as the amount available in the previous year, given fluctuations in Bank net earnings from year to year.

Therefore, under the proposed amendment to § 951.3(a)(2), a Bank, in its discretion, could allocate up to the greater of $3 million or 25 percent of its annual required AHP contribution for the subsequent year to the current year's competitive application program. This authority would be separate from and in addition to a Bank's existing authority to allocate up to the greater of $3 million or 25 percent of its annual required AHP contribution for the subsequent year to the current year's homeownership set-aside programs at such Bank. *See* 12 CFR 951.3(a)(1). As with the homeownership set-aside programs, a Consumer Price Index (CPI) adjustment provision would be included in the regulation for the maximum dollar limit under the competitive application program. Commenters generally supported these proposed changes.

Accordingly, the final rule adopts, without change, the proposed amendments to § 951.3(a)(2) to allow a Bank to allocate up to the greater of $3 million or 25 percent of its annual required AHP contribution for the subsequent year to the current year's competitive application program, as well as the CPI adjustment provision.

C. Removal of Requirement that Banks Offer Comparable Amounts of AHP Subsidies in Each Funding Period—§ 951.6(b)(1)

The AHP regulation provides that the amount of AHP subsidies offered by a Bank in each funding period under the

[1] Each Bank is required generally to contribute annually to its AHP 10 percent of its net earnings for the previous year. If the aggregate amount of such annual payments by all of the Banks is not at least $100 million, each Bank must contribute to its AHP its *pro rata* share of $100 million. *See* 12 U.S.C. 1430(j)(5).

competitive application program shall be comparable. *See* 12 CFR 951.6(b)(1). As discussed in the **SUPPLEMENTARY INFORMATION** section of the proposed rule, a number of Banks have suggested that this requirement be removed, in order to give the Banks flexibility to offer different amounts of AHP funds in each funding period to coincide with the funding cycles of other key funding sources in the Bank's district, or with different demands based on market or housing construction cycles. The Finance Board agrees that it would be beneficial for the Banks to have greater flexibility to manage their AHP funding in this way.

Therefore, under the proposed rule, the requirement in § 951.6(b)(1) that the amount of AHP subsidies offered in each Bank's funding period must be comparable would be removed. Commenters generally supported this proposed change.

Accordingly, the final rule adopts, without change, the proposed amendment to § 951.6(b)(1) removing the requirement that the amount of AHP subsidies offered in each Bank's funding period must be comparable.

D. Removal of Requirement that Banks Determine Compliance of AHP Applications With Eligibility Requirements Before Scoring Applications—§ 951.6(b)(4)(i)

The AHP regulation provides that projects receiving AHP subsidies pursuant to a Bank's competitive application program must meet the eligibility requirements of the regulation. *See* 12 CFR 951.5(b). The AHP regulation further provides that a Bank shall score only those applications meeting the eligibility requirements of § 951.5(b). *See* 12 CFR 951.6(b)(4)(i). This means that a Bank must first determine whether each application received satisfies all of the regulatory eligibility requirements, including an assessment of each project's financial feasibility, before the Bank may score the application.

As discussed in the **SUPPLEMENTARY INFORMATION** section of the proposed rule, a number of Banks have maintained that, given the high volume of applications received, it is burdensome and time consuming to have to determine the eligibility, and in particular, the financial feasibility, of each application before the application may be scored, especially when many of the applications determined to be eligible end up scoring too low to be awarded AHP funds. The Banks have suggested that it would be more efficient to be able to score the applications first, and then determine their eligibility starting with the highest scoring applications and continuing on down the list, until all of the AHP subsidy is committed. The Finance Board agrees that the Banks should have the discretion to determine which approach works best for that Bank. Section 951.5(b) would still require that AHP subsidy may only be awarded to projects meeting the regulatory eligibility requirements, including financial feasibility. *See* 12 CFR 951.5(b).

Therefore, under the proposed rule, the requirement in § 951.6(b)(4)(i) that the Bank score only those applications meeting the regulatory eligibility requirements would be removed. Commenters generally supported this proposed change.

Accordingly, the final rule adopts, without change, the proposed amendment to § 951.6(b)(4)(i) removing the requirement that the Bank score only those applications meeting the regulatory eligibility requirements.

E. Permitting Banks to Award Scoring Points to Projects Using Properties Conveyed by the Federal Government, and to Projects Using Properties Conveyed by Non-Federal Government Entities for an Amount Substantially Below Their Fair Market Value—§ 951.6(b)(4)(iv)(A)

The AHP regulation includes, as one of nine criteria for scoring AHP applications, the creation of housing using a significant proportion of units or land donated or conveyed for a ''nominal'' price by the Federal government or any agency or instrumentality thereof, or by any other party. *See* 12 CFR 951.6(b)(4)(iv)(A). A ''nominal'' price is defined in the regulation as a small, negligible amount, most often one dollar, and may be accompanied by modest expenses related to the conveyance of the property for use by the project. *See* 12 CFR 951.6(b)(4)(iv)(A). Scoring points, therefore, may not be awarded to projects using Federal government or non-Federal government properties that were conveyed for more than a ''nominal'' price.

1. Properties Donated or Conveyed by the Federal Government

As discussed in the **SUPPLEMENTARY INFORMATION** section of the proposed rule, in a number of markets throughout the country, there are substantial quantities of foreclosed housing units owned by HUD and other Federal government agencies. Allowing the Banks to award scoring points for projects using properties conveyed by the Federal government, regardless of the amounts charged for their conveyance, would be consistent with the Bank Act provisions encouraging the use of AHP funds in projects involving housing owned or held by the Federal government, and coordination of the AHP with other Federal or federally-subsidized affordable housing activities to the maximum extent possible. *See* 12 U.S.C. 1430(j)(3)(B), (j)(9)(G).

Therefore, under the proposed rule, § 951.6(b)(4)(iv)(A) would have been amended to provide that a Bank may award scoring points to projects using a significant proportion of housing units conveyed by the Federal government or any agency or instrumentality thereof, ''regardless of the amount charged for such conveyance.'' Commenters generally supported this proposed change. A Bank commenter and Bank Affordable Housing Advisory Council commenter argued that projects that limit acquisition costs are better positioned to charge low rents and, therefore, serve very low-income households, and should be able to receive more scoring points on that basis. Consequently, these commenters did not want the Banks to be required to give the same number of scoring points to projects using Federal government properties conveyed at market value as are given to projects using properties conveyed at below-market value. The commenters recommended allowing the Banks to decide, in their discretion, whether to award variable scoring points that would give more points for projects using properties conveyed for an amount significantly below their fair market value, whether conveyed by a Federal or non-Federal government entity.

The regulation currently allows the Banks to designate a scoring criterion as a variable-point criterion if there are varying degrees to which an application satisfies the criterion. *See* 12 CFR 951.6(b)(4)(iii). The Finance Board agrees that the Banks should have discretion to determine whether to award variable scoring points for projects using properties conveyed by the Federal government, as well as non-Federal government entities, depending on the amount charged for such properties. The language in proposed § 951.6(b)(4)(iv)(A)(*3*) would not prohibit variable scoring for non-Federal government properties, but the ''regardless of the price of conveyance'' language in proposed § 951.6(b)(4)(iv)(A)(*2*) for Federal government properties could be interpreted to prohibit such variable scoring for projects using Federal government properties.

Accordingly, consistent with the proposed rule, the final rule removes the ''nominal'' price requirement for properties conveyed by Federal government entities in § 951.6(b)(4)(iv)(A)(*2*), and the language is clarified to allow for variable scoring depending on the amount charged for the conveyance of such properties. The final rule also corrects an oversight in the proposed rule by allowing scoring points to be awarded for projects using a significant proportion of land conveyed by a Federal government entity.

2. Properties Donated or Conveyed by Non-Federal Government Entities

As discussed in the **SUPPLEMENTARY INFORMATION** section of the proposed rule, a number of Banks also have maintained that the definition of ''nominal'' in the existing regulation may be too restrictive in not recognizing the variety of ways in which properties are being conveyed by non-Federal government entities to affordable housing project sponsors under different local market conditions in each Bank district. For example, properties may be conveyed to project sponsors for a price of one dollar, for a price that is more than one dollar but significantly below the property's fair market value, or for payment of liens on the property such as back taxes, or the administrative costs of transferring the property, which may be more than one dollar but significantly below the property's fair market value. The Banks have suggested that the regulation should explicitly allow scoring points to be awarded for properties conveyed from non-Federal government entities under these circumstances, where the amounts paid for the properties are significantly below their fair market value. The Finance Board agrees that this could be beneficial to the AHP, and that the Banks should have the discretion to define what is an amount significantly below the fair market value of the property, since these amounts may vary depending on local market conditions in each Bank district.

Therefore, under the proposed rule, § 951.6(b)(4)(iv)(A) would be amended by removing the ''nominal price'' requirement and adding language clarifying that a Bank may award scoring points for projects using a significant proportion of properties conveyed by a non-Federal government entity at an amount that is significantly below their fair market value, as defined by the Bank in its AHP implementation plan. As noted above, the language in proposed § 951.6(b)(4)(iv)(A)(*3*) does not prohibit variable scoring for non-Federal government properties, based on the amount charged for conveyance of the property. Commenters generally supported the proposed change.

Accordingly, consistent with the proposed rule, the final rule adopts the proposed amendment to § 951.6(b)(4)(iv)(A)(*3*) removing the ''nominal price'' requirement and providing that a Bank may award scoring points for projects using a significant proportion of properties conveyed by a non-Federal government entity at an amount that is significantly below their fair market value, as defined by the Bank in its AHP implementation plan. The final rule also corrects an oversight in the proposed rule by allowing scoring points to be awarded for projects using a significant proportion of land conveyed by a non-Federal government entity for an amount significantly below its fair market value.

F. Removal of Definition of ''Homeless Household'' for Purposes of the Homeless Households Scoring Criterion—§ 951.6(b)(4)(iv)(D)

The AHP regulation also includes as a scoring criterion the creation of housing for homeless households, as further described in the regulation. *See* 12 CFR 951.6(b)(4)(iv)(D). The term ''homeless household'' is defined in the regulation as a household made up of one or more individuals, other than individuals imprisoned or otherwise detained pursuant to state or federal law, who:

1. Lack a fixed, regular and adequate nighttime residence; or

2. Have a primary nighttime residence that is:

a. A supervised publicly or privately operated shelter designed to provide temporary living accommodations (including welfare hotels, congregate shelters, and transitional housing for the mentally ill);

b. An institution that provides a temporary residence for individuals intended to be institutionalized; or

c. A public or private place not designed for, or ordinarily used as, a regular sleeping accommodation for human beings.

See 12 CFR 951.1.

As discussed in the **SUPPLEMENTARY INFORMATION** section of the proposed rule, a number of Banks have maintained that this definition of ''homeless household'' should include persons in certain additional situations who may be viewed as homeless, or at imminent risk of homelessness. For example, although the current definition covers victims of domestic violence living in organized shelters, it does not cover victims of domestic violence in rural areas where there are no organized shelters and the victims may have no alternative but to live in the homes of their abusers. Nor does the definition cover persons living in shared overcrowded housing in extremely cold climates where there is a shortage of organized shelters and it is impossible to survive living on the streets or in cars. Other situations may include children living in foster care who are about to reach the age of 18 and must leave the foster care system, and households facing imminent loss of their homes due to condemnation or eviction. The Finance Board agrees that the Banks should be able to award scoring points for projects serving these additional types of households. The Finance Board believes that the Banks should have the discretion to define what is a ''homeless household,'' since the types of homeless households may vary depending on local conditions in each Bank district. Allowing the Banks to define what is a ''homeless household'' would be consistent with the discretionary authority the Banks already have under the scoring criteria in the AHP regulation to define and provide preferences for other targeted groups, such as special needs households or first-time homebuyers. *See* 12 CFR 951.6(b)(4)(iv)(F)(*1*), (*3*).

Therefore, under the proposed rule, the definition of ''homeless household'' in § 951.1 would be removed and § 951.6(b)(4)(iv)(D) would be amended to provide that, for purposes of scoring applications that reserve units for ''homeless households,'' a ''homeless household'' shall have the meaning as defined by the Bank in its AHP implementation plan. Commenters generally supported this proposed change.

Accordingly, the final rule adopts, without change, the proposed amendments removing the definition of ''homeless household'' from § 951.1, and providing in § 951.6(b)(4)(iv)(D) that, for purposes of scoring applications that reserve units for ''homeless households,'' a ''homeless household'' shall have the meaning as defined by the Bank in its AHP implementation plan.

G. Making the Requirements for Post-Completion Modifications the Same as the Current Requirements for Pre-Completion Modifications—§§ 951.7, 951.9

1. The AHP regulation sets forth different requirements that must be satisfied in order for a Bank to approve, in its discretion, a modification to the terms of a project's approved

application, depending on whether the modification would be made prior to or after the project's completion. The regulation provides that a Bank, in its discretion, may approve a modification request, including requests for additional AHP subsidy, made prior to project completion, provided that:

a. The project, incorporating any such changes, would meet the regulatory eligibility requirements;

b. The application, as reflective of such changes, continues to score high enough to have been approved in the funding period in which it was originally scored and approved by the Bank; and

c. There is good cause for the modification.

See 12 CFR 951.7.

2. A Bank, in its discretion, may approve modification requests, not including requests for additional AHP subsidy, made after project completion, provided that:

a. The project, incorporating any material changes, would meet the regulatory eligibility requirements;

b. The application, as reflective of such changes, continues to score high enough to have been approved in the funding period in which it was originally scored and approved by the Bank;

c. The project is in financial distress, or is at substantial risk of falling into such distress (financial distress requirement); and

d. The project sponsor or owner has made best efforts to avoid noncompliance with the terms of the application for subsidy and the requirements of the regulation.

See 12 CFR 951.9.

As discussed in the **SUPPLEMENTARY INFORMATION** section of the proposed rule, because a Bank may not approve additional AHP subsidy for a post-completion modification of a project, projects seeking additional AHP subsidy would have to submit a new application for subsidy in a regular competitive application funding period and score highly enough to be approved in that funding period. Projects may be unable to score successfully in the new funding period because the scoring criteria and priorities in the new funding period may not be the same as those applicable in the funding period when the projects were originally approved. Some Banks have argued that they should be able to approve modifications of completed projects for good cause even when the project is not faced with financial distress. A number of Banks also have indicated that the inability to provide additional AHP subsidy to completed but troubled projects makes it difficult or impossible for the Banks to participate with other funding sources in workout arrangements to help such projects retain their affordable units or forestall financial distress. The projects may then fail to comply with their AHP regulatory requirements or application commitments, subjecting them to possible recapture of the AHP subsidy. *See* 12 CFR 951.12. The Finance Board believes that it would be beneficial for such projects if the Banks had more flexibility to participate in such workouts.

Therefore, under the proposed rule, § 951.9, including the financial distress requirement, would be removed, and § 951.7 would be amended to include authorization for the Banks, in their discretion, to approve increases in subsidy after project completion and to otherwise make the post-completion modification requirements the same as those currently applicable to pre-completion modifications. Commenters generally supported these proposed changes.

The **SUPPLEMENTARY INFORMATION** section of the proposed rule included a discussion of the requirement in § 951.7(a)(2) that a project, as proposed to be modified, must continue to score high enough to have been approved in the funding period in which it was originally scored and approved by the Bank, in order to be approved for a modification. In some cases, the project may need to be modified because of changed market conditions, but the project, as modified, would not continue to score high enough to have been approved in its original funding period. While recognizing this issue, the Finance Board expressed concern about the potential that modifications offer for an applicant to manipulate the scoring system by making overly optimistic commitments in its AHP application that it knows it cannot reasonably meet in order to score successfully, with the anticipation of getting a modification after approval to reduce those commitments. The Finance Board noted that it has a waiver process that would enable the Finance Board, upon a showing of good cause, to waive the rescoring requirement for a modification, on a case-by-case basis. *See* 12 CFR 907.2. Based on these concerns, under the proposed rule, the rescoring requirement in § 951.7(a)(2) would be retained.

Commenters generally supported, and one Bank in particular strongly endorsed, retaining the rescoring requirement. One Bank commenter opposed retaining the rescoring requirement for post-completion modification requests, on the basis that other limitations could be incorporated into the AHP regulation to address the concerns about scoring manipulation. The Bank suggested the adoption of three standards for assessing post-completion modification requests for projects that cannot rescore successfully, including a requirement that the Bank make a factual determination that no intentional manipulation occurred or over-commitments were made in the initial AHP application. In the alternative, the Bank recommended that rescoring only be required for modification requests received during the first year after project completion.

The Finance Board's objective in amending the AHP regulation is to give the Banks greater flexibility in determining how to deal with post-completion modifications. The Finance Board's view is that the circumstances surrounding an individual request for a post-completion modification may vary widely, and the regulatory standards proposed by the Bank are likely to reduce the Bank's flexibility rather than to increase it. For example, it may be difficult for a Bank to make a factual determination that there was no intentional overcommitting in the application. Moreover, there may be instances where a post-completion modification would be appropriate even if the project sponsor is shown to have overcommitted in the application, such as where affordable units would be lost and their low- or moderate-income occupants displaced if the modification were not approved. The Bank always has the discretion to set its own standards, within the existing regulatory framework, for approving or denying modification requests that can successfully rescore. In the case of modification requests that cannot rescore successfully, a showing of good cause could form the basis for requesting a waiver of the rescoring requirement from the Finance Board. The Finance Board does not believe that requiring a Bank to obtain a waiver from the Finance Board if a modification request cannot rescore successfully would impose such an undue burden on the Bank as to warrant a change in the long-standing requirement for rescoring of modification requests. The Finance Board also does not agree that the Bank's alternative proposal of a one-year time limit for the rescoring requirement will eliminate the possible incentive to manipulate the scoring system. Therefore, the final rule does not adopt the Bank's suggestions to remove the rescoring requirement, or to limit the

time period for rescoring of post-completion modification requests.

Accordingly, the final rule adopts, without change, the proposed amendment removing § 951.9, including the financial distress requirement, and the proposed amendment to § 951.7 authorizing the Banks, in their discretion, to approve increases in AHP subsidy after project completion and otherwise making the post-completion modification requirements the same as those currently applicable to pre-completion modifications.

H. Providing the Banks With Up to One Year and 120 Days From Rental Project Completion to Complete the Initial Monitoring of Such Project—§ 951.10(c)(2)

1. The AHP regulation provides that within the first year after completion of a rental project, the project owner must:

a. Certify to the Bank that the services and activities committed to in the AHP application have been provided in connection with the project; and

b. Provide a list of actual tenant rents and incomes to the Bank, and certify that the tenant rents and incomes are accurate and in compliance with the rent and income targeting commitments made in the AHP application, and that the project is habitable.

See 12 CFR 951.10(a)(2)(ii).

2. The regulation further provides that each Bank must take the steps necessary to determine that:

a. Within the first year after completion of a rental project, the services and activities committed to in the AHP application have been provided in connection with the project; and

b. The AHP subsidies were used for eligible purposes, the project's actual costs were reasonable and customary in accordance with the Bank's project feasibility guidelines, and the subsidies were necessary for the financial feasibility of the project, as currently structured.

See 12 CFR 951.10(c)(2).

As discussed in the **SUPPLEMENTARY INFORMATION** section of the proposed rule, a number of Banks have indicated that if a rental project owner does not provide its certifications and other documentation to the Bank until late in the first year after project completion, the Bank may not be able to complete its reviews of the documentation and make its determinations of compliance under § 951.10(c)(2) by the end of that year, as prescribed by the regulation. The suggestion has been made that the Banks be given some additional reasonable period of time after receipt of the project owners' documentation to conduct their own review and compliance determinations.

The Finance Board concurs that the Banks should have sufficient time to complete the compliance reviews. The Finance Board also believes that this time period should apply not only for completing the services and activities review, but also for the review of eligible purposes, actual costs and feasibility required under existing § 951.10(c)(2)(ii).

Therefore, § 951.10(c)(2) of the proposed rule would have been amended to require each Bank to complete the compliance reviews required thereunder within 120 days after receiving the rental project owner documentation.

Commenters generally supported this proposed change. One Bank commenter supported the change, provided the Banks would still have up to one year from project completion to complete the compliance review. The Finance Board agrees that, consistent with the existing regulatory monitoring framework for rental projects, the review period should commence from the date of project completion rather than from the date of receipt of the project documentation. The Finance Board also has determined that, regardless of when the documentation is received during the first year after project completion, for ease of implementation, the Banks should have up to one year and 120 days from the date of project completion to complete their compliance reviews.

Accordingly, the final rule revises § 951.10(c)(2) to provide that each Bank must complete the compliance reviews required thereunder within one year and 120 days after rental project completion.

I. Bank Authority To Allow Re-Use by Members or Project Sponsors of Repaid AHP Direct Subsidies in the Same Owner-Occupied Project—§§ 951.3(b)(1)(ix); 951.8(b)(2), (c)(5); 951.10(a)(1)(i), (b)(1)(ii), (c)(1); 951.12(e)(2); 951.13(d)(1)

1. Authority of Banks, in Their Discretion, To Adopt Re-Use Programs For Repaid AHP Direct Subsidy—§§ 951.3(b)(1)(ix), 951.12(e)(2)

As discussed in the **SUPPLEMENTARY INFORMATION** section of the proposed rule, prior to 1995, sponsors of owner-occupied projects were allowed to re-use repaid AHP direct subsidies to provide the same kind of direct subsidy assistance to other eligible households in the same project in accordance with the project sponsor's approved AHP application. In 1995, the Finance Board discontinued authorization of AHP direct subsidy re-use programs for new AHP projects, pending a comprehensive review and revision of the AHP regulation.

The current AHP regulation, which went into effect in 1998, continues to prohibit such re-use of repaid AHP direct subsidies by members or project sponsors. Specifically, § 951.13(d)(1) of the AHP regulation provides generally that a member must ensure that an owner-occupied unit that is purchased, constructed, or rehabilitated with the proceeds of an AHP direct subsidy is subject to a deed restriction or other retention agreement requiring that if the unit is sold to an income-ineligible household or refinanced prior to the end of the five-year retention period and is no longer subject to a deed restriction, a *pro rata* share of the subsidy shall be repaid to the Bank. *See* 12 CFR 951.13(d)(1). The Bank must use these repaid AHP subsidies to fund project modifications, interest-rate increases in approved projects, homeownership set-aside applications, or an approved alternate project if sufficient other funds are available. *See* 12 CFR 951.8(c)(4), 951.12(e), 951.14(a)(2).

A number of Banks and project sponsors have requested that the Finance Board allow members, in the case of AHP direct subsidies provided through a homeownership set-aside program, or project sponsors, in the case of AHP direct subsidies provided through the competitive application program, to re-use repaid AHP direct subsidies in the same project in the ways described above. The Banks and project sponsors maintain that allowing such re-use of repaid direct subsidies can be an efficient use of AHP subsidies. The amounts repaid generally would be quite small, the project sponsor would receive no additional AHP subsidy from the Bank, and the re-used AHP subsidy would continue to assist other AHP-eligible households in the same project in accordance with the original AHP application commitments. Any household assisted through the re-use of repaid direct subsidy would be subject to a new five-year retention agreement. *See* 12 CFR 951.5(a)(5), 951.13(d)(1). Permitting such re-use of repaid direct subsidies could help those project sponsors whose projects are aimed at maintaining a core of homeowners in particular areas to promote neighborhood stabilization and revitalization in those areas. For the reasons discussed above, the Finance Board agrees that the Banks should have the authority to allow the re-use of repaid AHP subsidies in the same project.

Therefore, under § 951.12(e)(2) of the proposed rule, members or project sponsors would be able to re-use repaid AHP direct subsidies in the same project if authorized by the Bank, in its discretion, in its AHP implementation plan and within the time period specified by the Bank in the plan. Commenters generally supported this proposed change.

Accordingly, consistent with the proposed rule, § 951.12(e)(2) of the final rule generally authorizes each Bank to adopt AHP direct subsidy re-use programs. The final rule makes some technical changes to the language in § 951.12(e)(2) to provide greater clarity, and makes a conforming change to § 951.3(b)(1) by adding paragraph (ix), which requires each Bank to include in its AHP implementation plan any requirements, including time limits, for re-use of AHP direct subsidies.

2. Inclusion of Rehabilitation Costs as Eligible Re-Use Costs—§ 951.12(e)(2)

As discussed in the **SUPPLEMENTARY INFORMATION** section of the proposed rule, the Finance Board intended that repaid AHP direct subsidy be eligible for re-use for the same purposes as the original use of the subsidy, *i.e.,* for downpayment, closing cost, rehabilitation or interest rate buydown assistance. A commenter noted that the language in proposed § 951.12(e)(2) did not specifically include rehabilitation costs as an eligible use of repaid AHP subsidy.

Accordingly, § 951.12(e)(2) of the final rule corrects this omission by adding rehabilitation costs as an eligible use of repaid AHP direct subsidy.

3. Authority of Banks, in Their Discretion, to Require Return of Repaid AHP Direct Subsidy to the Bank For Re-Use, or to Permit Member or Project Sponsor to Retain Repaid AHP Direct Subsidy For Re-Use—§§ 951.12(e)(2), 951.13(d)(1)

As discussed in the **SUPPLEMENTARY INFORMATION** section of the proposed rule, because of concerns about members or project sponsors being able to earn interest on idle repaid direct subsidies pending their re-use, the proposed rule would have retained the current regulatory requirement that any repaid AHP direct subsidy must be returned to the Bank. *See* 12 CFR 951.13(d)(1). The Bank then would re-disburse the subsidy to the member or project sponsor for another eligible household in the same project. Several Bank commenters opposed this requirement on the basis that it would be so cumbersome, inefficient and costly to administer as to negate the benefit that might otherwise be realized from an AHP subsidy re-use program. One Bank stated that the amount of interest earned on modest amounts of repaid AHP direct subsidy over relatively brief periods of time would be minimal and, therefore, the repaid subsidy should not have to be returned to the Bank. Another Bank recommended adopting a ''materiality'' test under which the Banks would be allowed to determine, in their AHP implementation plans, whether to require the return to the Bank of repaid AHP subsidy of $5,000 or less, provided that repaid subsidy not returned to the Bank be held by the member or project sponsor in a non-interest-bearing account pending re-use. Another Bank stated that any concerns about idle repaid subsidy could be addressed by requiring the Banks to establish in their AHP implementation plans appropriate accounting and use controls, such as additional reporting requirements, certifications by members or project sponsors, or the right to audit members' or project sponsors' books and records. The Bank noted that such safeguards, coupled with the existing provisions of § 951.13(d)(1), which require the execution of new five-year retention agreements for each new household assisted with AHP subsidy, should ensure that repaid AHP subsidy is re-used both promptly and appropriately.

The Finance Board agrees that existing monitoring requirements, as well as new disbursement and monitoring requirements included in the final rule and discussed further below in section I.4., should ensure that any repaid AHP subsidy retained by a member or project sponsor will be re-used promptly and in compliance with the requirements of the AHP regulation and the commitments of the approved AHP application.

Accordingly, § 951.12(e)(2) of the final rule provides that the Bank shall have discretion, as provided in its AHP implementation plan, to determine whether to allow members and project sponsors to retain repaid AHP direct subsidies for re-use in the same project, or to require their repayment to the Bank for subsequent disbursement by the Bank to the members or project sponsors for re-use in the same project. If a Bank should decide to allow members or project sponsors to retain repaid AHP direct subsidies for re-use, the Bank would have the discretion to determine any requirements to place on the project sponsor's administration of those funds during the period before their re-use.

The final rule also makes conforming changes to § 951.13(d)(1), which requires execution of a five-year retention agreement for each new household assisted with AHP direct subsidy, including re-used AHP direct subsidy, to incorporate the repayment obligations to the Bank, or to the member or project sponsor, depending on whether or not the Bank has authorized retention and re-use of repaid AHP direct subsidy by the member or project sponsor.

4. Disbursement and Initial Monitoring Requirements for Re-Use of Repaid AHP Direct Subsidies—§§ 951.8(b)(2), (c)(5); 951.10(a)(1)(ii), (b)(1)(ii), (c)(1)

a. Notice to Bank and Member of Disbursement of Repaid AHP Direct Subsidies Under Homeownership Set-Aside Program and Competitive Application Program—§ 951.8(b)(2), (c)(5)

In order to ensure the timely use of repaid AHP direct subsidies, § 951.12(e)(2) of the final rule, consistent with the proposed rule, requires a Bank to specify in its AHP implementation plan the time period within which the repaid subsidies must be re-used for an eligible household. Under the proposed rule, the repaid subsidies would have been repaid to the Bank. Since the Bank would have been re-disbursing the repaid subsidies to the member for re-use under both the homeownership set-aside program and the competitive application program, the Bank would have been able to verify, upon its disbursement of the repaid subsidies, whether the re-use was in compliance with the requirements of the AHP regulation and the commitments of the approved AHP application.

However, under § 951.12(e)(2) of the final rule, a member or project sponsor, pursuant to the homeownership set-aside program or competitive application program, respectively, may, if authorized by the Bank, retain the repaid subsidies for re-use rather than return them to the Bank for subsequent disbursement. Under the current AHP regulation, prior to initial disbursement of homeownership set-aside funds by a Bank to a member, the Bank must require the member to certify that the funds will be provided to a household meeting the eligibility requirements of § 951.5(a)(2) and that they will be provided in accordance with the homebuyer counseling requirements of § 951.5(a)(7), if applicable. In order for the Bank to be able to verify compliance of the re-use of homeownership set-aside funds that have been repaid to and retained by a member, the Bank would need to receive a certification from the

member prior to disbursement by the member of the repaid subsidy.

Accordingly, the final rule amends § 951.8(b)(2) by adding a requirement that prior to disbursement by a member of homeownership set-aside funds repaid to and retained by such member, the Bank shall require the member to provide a certification to the Bank on household eligibility and homebuyer counseling requirements, if applicable.

In addition, in order for the Bank and the member to be able to verify compliance of the re-use of subsidies repaid to and retained by the project sponsor under the competitive application program (see further discussion of initial monitoring requirements in sections I.4.c. and d. below), the Bank and member would need to be notified of when the repaid subsidies are being re-used by the project sponsor.

Accordingly, the final rule amends § 951.8 by adding paragraph (c)(5), which requires that, prior to disbursement by a project sponsor of AHP subsidy repaid to and retained by such project sponsor, the project sponsor shall provide written notice to the member and the Bank of its intent to disburse the repaid subsidy to a household satisfying the requirements of the AHP regulation and the commitments in the approved AHP application.

b. Initial Monitoring Requirements for Project Sponsors Under Competitive Application Program—§ 951.10(a)(1)(i)

Under the initial monitoring requirements of the existing AHP regulation, where AHP subsidies are used under the competitive application program to finance the purchase of owner-occupied units, project sponsors must maintain household income verification documentation available for review by the member or the Bank. *See* 12 CFR 951.10(a)(1)(i). The final rule makes this provision applicable where AHP subsidies are used initially under the competitive application program to finance the rehabilitation of owner-occupied units, a technical oversight in the existing regulation. This provision also applies where AHP subsidies approved under the competitive application program are repaid and provided to new eligible households in the same project, pursuant to a Bank's subsidy re-use program.

c. Initial Monitoring Requirements for Members Under Competitive Application Program—§ 951.10(b)(1)(ii)

Under the initial monitoring requirements of the existing AHP regulation, within one year after disbursement to an owner-occupied project of all approved AHP subsidies under the competitive application program, the member must review the project documentation and certify to the Bank that:

(i) The AHP subsidies have been used according to the commitments made in the approved AHP application; and

(ii) The AHP-assisted units are subject to deed restrictions or other legally enforceable retention agreements or mechanisms meeting the requirements of § 951.13(d)(1). *See* 12 CFR 951.10(b)(1)(ii). This one-year time frame would not be feasible under a subsidy re-use program, where AHP subsidies may be repaid and re-used at any time. Under a subsidy re-use program, the member should be reviewing the project documentation and making the required certifications within some reasonable period of time after each re-use of repaid subsidy. The Finance Board believes that 60 days would be such a reasonable time period.

Accordingly, the final rule amends § 951.10(b)(1)(ii) to provide that, within 60 days after receipt of a notice of disbursement of repaid subsidy provided by the project sponsor pursuant to § 951.8(c)(5), the member must review the project documentation and make the certification on re-use of the AHP subsidy and existence of the retention agreement.

d. Initial Monitoring Requirements for Banks Under Competitive Application Program—§ 951.10(c)(1)

The initial monitoring requirements of the existing AHP regulation provide generally that a Bank must take the steps necessary to determine, based on a review of the documentation for a sample of projects and units within one year of receiving the member certifications described above, that:

(i) The households receiving the AHP subsidies under the competitive application program were income-eligible;

(ii) The AHP subsidies were used for eligible purposes, the project's actual costs were reasonable and customary in accordance with the Bank's project feasibility guidelines, and the subsidies were necessary for the financial feasibility of the project; and

(iii) The AHP-assisted units are subject to legally enforceable retention agreements meeting the requirements of § 951.13(d)(1).

See 12 CFR 951.10(c)(1). As discussed above, this one-year time frame would not be feasible under a subsidy re-use program, nor is the sampling approach appropriate, where AHP subsidies may be repaid and re-used, and accompanying certifications received from members, at any time. Rather, the Bank should be reviewing the project documentation and member certification for each re-use of repaid subsidy upon receipt by the Bank of such certification.

Accordingly, the final rule amends § 951.10(c)(1) to provide that the Bank must review the project documentation and member certification for each disbursement of repaid AHP subsidy under a subsidy re-use program, upon receipt of such certification.

J. AHP Subsidy Re-Use Programs Involving Loan Pools

Proposed § 951.13(c)(1)(iii) would have allowed the Banks to authorize the re-use of the unused AHP interest rate subsidy of prepaid mortgage loans to subsidize the interest rate on another mortgage loan to an eligible household that replaced the prepaid mortgage loan in a pool of mortgage loans held by the member. The only comments received on this proposal were from four entities that currently participate together in a particular type of AHP-assisted loan pool transaction in one Bank district. The commenters indicated that the actual loan pool structure used in this transaction is different from the structure set forth in the proposed rule. The commenters recommended that the final rule authorize the re-use of unused AHP subsidy in the type of loan pool structure used by the commenters. The commenters also recommended that the current regulatory five-year retention period requirement for owner-occupied projects, which applies to individual mortgage loans within the pool, be amended to apply broadly to a pool of AHP-assisted mortgage loans. *See* 12 CFR 951.13(c)(4), (d)(1).

The commenters' loan pool proposal differs significantly from the loan pool proposal set forth in the proposed rule, and Finance Board staff has determined that additional information is needed on the nature of this proposal before a determination can be made on whether to authorize the re-use of unused AHP subsidy in such a transaction.

III. Paperwork Reduction Act

The final rule does not contain any collections of information pursuant to the Paperwork Reduction Act of 1995. *See* 44 U.S.C. 3501 *et seq.* Therefore, the Finance Board has not submitted any information to the Office of Management and Budget for review.

IV. Regulatory Flexibility Act

The final rule applies only to the Banks, which do not come within the meaning of ''small entities,'' as defined

in the Regulatory Flexibility Act (RFA). *See* 5 U.S.C. 601(6). Thus, in accordance with section 605(b) of the RFA, 5 U.S.C. 605(b), the Finance Board hereby certifies that the final rule will not have a significant economic impact on a substantial number of small entities.

List of Subjects in 12 CFR Part 951

Community development, Credit, Federal home loan banks, Housing, Reporting and recordkeeping requirements.

Accordingly, the Finance Board hereby amends part 951, title 12, chapter IX, Code of Federal Regulations, as follows:

PART 951—AFFORDABLE HOUSING PROGRAM

1. The authority citation for part 951 continues to read as follows:

Authority: 12 U.S.C. 1430(j).

2. Amend § 951.1 by:

a. Removing the definition of ''Homeless household''; and

b. In the definition of ''Median income for the area'', redesignating paragraphs (1)(ii) through (1)(iv) and paragraph (2)(ii) as paragraphs (1)(iii) through (1)(v) and paragraph (2)(iii), respectively; and adding new paragraphs (1)(ii) and (2)(ii).

The revisions read as follows:

§ 951.1 Definitions.

* * * * *

Median income for the area.

(1) * * *

(ii) The median income for the area obtained from the Federal Financial Institutions Examination Council;

* * * * *

(2) * * *

(ii) The median income for the area obtained from the Federal Financial Institutions Examination Council;

* * * * *

3. Amend § 951.3 by:

a. Revising paragraph (a)(2);

b. In paragraph (b)(1)(vii), removing the word ''and'' at the end of the paragraph;

c. In paragraph (b)(1)(viii), removing the period at the end of the paragraph and adding ''; and'' in its place; and

d. Adding paragraph (b)(1)(ix).

The additions and revisions read as follows:

§ 951.3 Operation of program and adoption of AHP implementation plan.

(a) * * *

(2) *Competitive application program.* That portion of a Bank's required annual AHP contribution that is not set aside to fund homeownership set-aside programs shall be provided to members through a competitive application program, pursuant to the requirements of this part. A Bank may allocate up to the greater of $3 million or 25 percent of its annual required AHP contribution for the subsequent year to the current year's competitive application program. Beginning in 2002 and for subsequent years, the maximum dollar limit set forth in this paragraph (a)(2) shall be adjusted annually by the Finance Board to reflect any percentage increase in the preceding year's Consumer Price Index (CPI) for all urban consumers, as published by the Department of Labor. Each year, as soon as practicable after the publication of the previous year's CPI, the Finance Board shall publish notice by **Federal Register**, distribution of a memorandum, or otherwise, of the CPI-adjusted limit on the maximum competitive application dollar amount.

(b) * * *

(1) * * *

(ix) Any requirements, including time limits, for re-use of repaid AHP direct subsidy, adopted by the Bank pursuant to § 951.12(e)(2).

* * * * *

4. Amend § 951.6 by:

a. Removing the last sentence in paragraph (b)(1);

b. Removing the first sentence in paragraph (b)(4)(i);

c. Revising paragraph (b)(4)(iv)(A); and

d. Revising paragraph (b)(4)(iv)(D).

The revisions read as follows:

§ 951.6 Procedure for approval of applications for funding.

* * * * *

(b) * * *

(4) * * *

(iv) * * *

(A) *Use of donated or conveyed government-owned or other properties.* The creation of housing using a significant proportion of:

(*1*) Land or units donated or conveyed by the Federal government or any agency or instrumentality thereof; or

(*2*) Land or units donated or conveyed by any other party for an amount significantly below the fair market value of the property, as defined by the Bank in its AHP implementation plan.

* * * * *

(D) *Housing for homeless households.* The creation of rental housing, excluding overnight shelters, reserving at least 20 percent of the units for homeless households, the creation of transitional housing for homeless households permitting a minimum of six months occupancy, or the creation of permanent owner-occupied housing reserving at least 20 percent of the units for homeless households. For purposes of this paragraph, the term ''homeless households'' shall have the meaning as defined by the Bank in its AHP implementation plan.

* * * * *

§ 951.7 [Amended]

5. Amend § 951.7 by:

a. In the section heading, adding the words ''or after'' between the words ''to'' and ''project''; and

b. In the introductory text of paragraph (a), adding the words ''or after'' between the words ''to'' and ''final''.

6. Amend § 951.8 by:

a. Revising paragraphs (b)(2) introductory text, (b)(2)(i) and (b)(2)(iii); and

b. Adding paragraph (c)(5).

The revisions and addition read as follows:

§ 951.8 Procedure for funding.

* * * * *

(b) * * *

(2) *Member certification upon disbursement.* Prior to disbursement by a Bank to a member of homeownership set-aside funds, or prior to disbursement by a member of homeownership set-aside funds repaid to and retained by such member pursuant to a subsidy re-use program authorized by the Bank under § 951.12(e)(2), the Bank shall require the member to certify that:

(i) The funds received by the member will be provided to a household meeting the eligibility requirements of § 951.5(a)(2);

(ii) * * *

(iii) Funds received by the member for homebuyer counseling costs will be provided according to the requirements of § 951.5(a)(7).

(c) * * *

(5) *Project sponsor notification of re-use of repaid AHP direct subsidy.* Prior to disbursement by a project sponsor of AHP direct subsidy repaid to and retained by such project sponsor pursuant to a subsidy re-use program authorized by the Bank under § 951.12(e)(2), the project sponsor shall provide written notice to the member and the Bank of its intent to disburse the repaid subsidy to a household satisfying the requirements of this part and the commitments in the approved AHP application.

§ 951.9 [Removed]

7. Remove § 951.9.

8. Amend § 951.10 by:

a. In paragraph (a)(1)(ii), inserting the words ''or rehabilitation'' between the words ''purchase'' and ''of'';

b. Revising paragraph (b)(1)(ii) introductory text;

c. Revising paragraph (c)(1) introductory text; and

d. Revising paragraph (c)(2) introductory text and paragraph (c)(2)(i).

The revisions read as follows:

§ 951.10 Initial monitoring requirements.

* * * * *

(b) * * *

(1) * * *

(ii) Within one year after disbursement to a project of all approved AHP subsidies, or in the case of a re-use of repaid AHP direct subsidy pursuant to § 951.12(e)(2), within 60 days after receipt of a notice of disbursement of such repaid subsidy provided by a project sponsor pursuant to § 951.8(c)(5), the member must review the project documentation and certify to the Bank that:

* * * * *

(c) *Requirements for Banks*—(1) *Owner-occupied projects.* Each Bank must take the steps necessary to determine, based on a review of the documentation for a sample of projects and units within one year of receiving the member certifications described in paragraph (b)(1)(ii) of this section, or, in the case of a re-use of repaid AHP direct subsidy pursuant to § 951.12(e)(2), based on a review of the documentation for the re-use upon receipt of the member certification for such re-use described in paragraph (b)(1)(ii) of this section, that:

* * * * *

(2) *Rental projects.* Each Bank must take the steps necessary to determine that, based on a review of the documentation described in paragraph (a)(2)(ii) of this section within one year and 120 days after completion of a rental project:

(i) The services and activities committed to in the AHP application have been provided in connection with the project; and

* * * * *

9. Amend § 951.12 by:

a. In paragraphs (a)(1)(ii), (a)(2)(i)(B) and (b)(2), removing the phrase ''§§ 951.7 or 951.9'' wherever it appears, and adding, in its place, the phrase ''§ 951.7''; and

b. Revising paragraph (e).

The revision reads as follows:

§ 951.12 Remedial actions for noncompliance.

* * * * *

(e) *Use of repaid subsidies*—(1) *Use of repaid AHP subsidies in other AHP-eligible projects.* Except as provided in paragraph (e)(2) of this section, amounts of AHP subsidy, including any interest, repaid to a Bank pursuant to this part shall be made available by the Bank for other AHP-eligible projects.

(2) *Re-use of repaid AHP direct subsidies in same project.* AHP direct subsidy, including any interest, repaid to a member or project sponsor under a homeownership set-aside program or the competitive application program, respectively, may be repaid by such parties to the Bank for subsequent disbursement to and re-use by such parties, or retained by such parties for subsequent re-use, as authorized by the Bank, in its discretion, in its AHP implementation plan, provided all of the following requirements are satisfied:

(i) The member or the project sponsor originally provided the direct subsidy as downpayment, closing cost, rehabilitation or interest rate buydown assistance to an eligible household to purchase or rehabilitate an owner-occupied unit pursuant to an approved AHP application;

(ii) The AHP direct subsidy, including any interest, was repaid to the member or project sponsor as a result of a sale by the household of the unit prior to the end of the retention period to a purchaser that is not a low-or moderate-income household; and

(iii) The repaid AHP direct subsidy is made available by the member or project sponsor, within the period of time specified by the Bank in its AHP implementation plan, to another AHP-eligible household to purchase or rehabilitate an owner-occupied unit in the same project in accordance with the terms of the approved AHP application.

* * * * *

10. Revise § 951.13(d)(1)(ii), (d)(1)(iii) and (d)(1)(iv), to read as follows:

§ 951.13 Agreements.

* * * * *

(d) * * *

(1) * * *

(ii) In the case of a sale of the unit prior to the end of the retention period, an amount equal to a pro rata share of the direct subsidy that financed the purchase, construction, or rehabilitation of the unit, reduced for every year the seller owned the unit, shall be repaid to the following parties, as applicable, from any net gain realized upon the sale of the unit after deduction for sales expenses, unless the purchaser is a low- or moderate-income household:

(A) To the Bank: If the Bank has not authorized re-use of the repaid subsidy pursuant to § 951.12(e)(2); if the Bank has authorized re-use of the repaid subsidy but not retention of such subsidy by the member or project sponsor pursuant to § 951.12(e)(2); or if the Bank has authorized retention and re-use of such subsidy by the member or project sponsor pursuant to § 951.12(e)(2) and the repaid subsidy is not re-used in accordance with the requirements of the Bank and § 951.12(e)(2); or

(B) To the member or project sponsor for re-use by such member or project sponsor, if the Bank has authorized retention and re-use of such subsidy by the member or project sponsor pursuant to § 951.12(e)(2);

(iii) In the case of a refinancing prior to the end of the retention period, an amount equal to a pro rata share of the direct subsidy that financed the purchase, construction, or rehabilitation of the unit, reduced for every year the occupying household has owned the unit, shall be repaid to the following parties, as applicable, from any net gain realized upon the refinancing, unless the unit continues to be subject to a deed restriction or other legally enforceable retention agreement or mechanism described in this paragraph (d)(1):

(A) To the Bank: If the Bank has not authorized re-use of the repaid subsidy pursuant to § 951.12(e)(2); if the Bank has authorized re-use of the repaid subsidy but not retention of such subsidy by the member or project sponsor pursuant to § 951.12(e)(2); or if the Bank has authorized retention and re-use of such subsidy by the member or project sponsor pursuant to § 951.12(e)(2) and the repaid subsidy is not re-used in accordance with the requirements of the Bank and § 951.12(e)(2); or

(B) To the member or project sponsor for re-use by such member or project sponsor, if the Bank has authorized retention and re-use of such subsidy by the member or project sponsor pursuant to § 951.12(e)(2); and

(iv) The obligation to repay AHP subsidy to the Bank, or to the member or project sponsor, as applicable, shall terminate after any foreclosure.

* * * * *

Dated: April 10, 2002.

By the Board of Directors of the Federal Housing Finance Board.

John T. Korsmo,

Chairman.

[FR Doc. 02–9329 Filed 4–16–02; 8:45 am]

BILLING CODE 6725–01–P

FEDERAL HOUSING FINANCE BOARD

12 CFR Part 985

[No. 2002–16]

RIN 3069–AB15

Office of Finance Board of Directors Meetings

AGENCY: Federal Housing Finance Board.

ACTION: Final rule.

SUMMARY: The Federal Housing Finance Board (Finance Board) is adopting as final, without change, the proposed rule to amend its regulation governing the minimum number of meetings that the Office of Finance board of directors must hold each year. The final rule requires the Office of Finance board of directors to hold at least six in-person meetings per year.

DATES: This final rule shall become effective on May 17, 2002.

FOR FURTHER INFORMATION CONTACT: Patricia L. Sweeney, Office of Policy, Research and Analysis, 202/408–2872, *sweeneyp@fhfb.gov*, or Charlotte A. Reid, Special Counsel, Office of General Counsel, 202/408–2510, *reidc@fhfb.gov*. Staff also can be reached by regular mail at the Federal Housing Finance Board, 1777 F Street, NW., Washington, DC 20006.

SUPPLEMENTARY INFORMATION:

I. Statutory and Regulatory Background

On March 7, 2002, the Finance Board published a proposed rule to amend the Finance Board regulation that currently requires the Office of Finance (OF) board of directors (OF board) to meet no fewer than nine times per year, which was published on June 7, 2000 in connection with a regulatory action that broadened the duties of the OF. *See generally* 12 CFR Parts 966, 985 and 989. 65 FR 36290 (June 7, 2000).[1] Under these regulations, the OF board is responsible for the oversight of every aspect of the operations of the OF and has broad powers to carry out its responsibilities. In executing these duties, the OF board is subject to many of the same regulations that apply to the boards of directors of the Banks.[2] To discharge these duties the Finance Board constituted the OF board with three part-time members, each of whom is appointed by the Finance Board. The OF board includes two Bank presidents and one private citizen member, who also serves as the chair. *See* 12 CFR 985.8(a).

Section 985.8(b) of the Finance Board regulations requires the OF board to hold no fewer than nine meetings annually.[3] When adopted, this requirement was consistent with the regulation that required the Banks' boards of directors to hold a minimum of nine meetings each year.[4] Since that time, the Finance Board has reduced the minimum number of board meetings required of the Banks to no fewer than six in-person board meetings annually, to reflect the actual operations of the Banks. 12 CFR 918.7(a).[5]

The OF board has asked the Finance Board to reduce the minimum number of meetings for the OF board to six in-person meetings annually. As discussed in the **SUPPLEMENTARY INFORMATION** section of the proposed rule, this request is based on arguments made by the OF board that it would be able to conduct its business more efficiently and effectively by holding no fewer than six meetings annually. The OF board noted that the debt issuance operations ''while substantial in terms of debt issued, are largely routine in nature,'' and are subject to periodic review by the examiners of the Finance Board, as well as by external auditors. Debt issuance follows established parameters, and the OF board ratifies debt issuance activity at regularly scheduled meetings. Consistent with applicable regulations, the OF board has in place the requisite guidelines, policies, and procedures to monitor the OF's day-to-day operations. Moreover, the activities of the OF are closely monitored by various Bank officials through a variety of formal and *ad hoc* committees. Finally, the OF board noted that it has in place sufficient checks and balances in place to ensure continued adequate review of the OF's operations, including an internal audit function that performs regular compliance reviews of the debt issuance and servicing functions and reports quarterly to the OF board. Additionally, by regulation, the OF board acting as the audit committee holds quarterly meetings, usually by telephone, to approve the publication of the quarterly and annual financial reports.

II. Analysis of Final Rule

The final rule adopts the proposed rule without change. The final rule reduces the minimum number of meetings that the OF board must hold each year from nine to six in-person meetings. The Finance Board received no comments on the proposed rule. The Finance Board believes that reducing the minimum number of meetings would not affect the ability of the OF board to monitor the operations of the OF, or the ability of the Finance Board to oversee the OF. The rule, which sets a minimum number of meetings, establishes a floor rather than a ceiling on the number of meetings the OF board may hold. The OF board may hold more meetings than the minimum number required, in order to carry out its duties and properly oversee the OF's operations. The Finance Board's experience with the reduced number of meetings for the Banks suggests that the boards of directors have been able to fully discharge their oversight duties under this revised framework.[6]

The Finance Board believes that setting the minimum number of in-person board meetings at six per year strikes an appropriate balance between the needs of the Finance Board as the safety and soundness regulator of the Banks and the obligation incumbent on the OF board to determine the number

[1] The principal function of the OF, which is a joint office of the Federal Home Loan Banks (Banks) under section 2B of the Federal Home Loan Bank Act (Act) (12 U.S.C. 1422b(b)(2)), is to offer, issue, and service consolidated obligations on which the Banks are jointly and severally liable (COs). The regulatory action authorized the OF to act as agent of the Banks in issuing COs under section 11(a) of the Act, in addition to its authority to issue COs on behalf of the Finance Board under section 11(c) of the Act. *See* 12 U.S.C. 1431 (a) and (c). The rule change expanded the OF's responsibility for preparing the combined Federal Home Loan Bank System (Bank System) annual and quarterly financial reports, as part of its debt issuance functions. *See* 12 CFR 985.3(b), 985.6(b).

[2] In particular, certain governance standards that apply to the boards of directors of the Banks under part 917 of the Finance Board regulations are made applicable to the OF board. *See* 12 CFR 985.8. Specifically, the OF board must adopt bylaws in accordance with the requirements of 917.10, and must establish policies for the management and operation of the OF, and approve a strategic business plan, in accordance with § 917.5 of the Finance Board regulations. *See* 12 CFR 985.8(a)(2), (d)(1), (2). The OF board also must review, adopt, and monitor annual operating and capital budgets, in accordance with § 917.8 of the Finance Board regulations, *see* 12 CFR 985.8(d)(3), and must establish and perform the duties of an audit committee consistent with the requirements of § 917.7 of the Finance Board regulations and applicable SEC regulations governing audit reports. *See* 12 CFR 985.8(d)(4).

[3] Prior to the adoption of this requirement in June 2000, the OF board was required to meet quarterly.

[4] *See* 65 FR 13663, 13664 (March 14, 2000), citing 64 FR 71275 (December 21, 1999).

[5] *See* 12 CFR 918.7 (66 FR 54916 (October 31, 2001)).

[6] As stated in the **SUPPLEMENTARY INFORMATION** section of the proposed rule, the Finance Board determined from an informal survey of governance practices of large financial institutions, including bank holding companies, thrift holding companies, and Fannie Mae and Freddie Mac, with asset sizes that ranged from $11 billion to $575.2 billion, the number of board meetings held each year varied from as few as four to no more than twelve, averaging approximately seven meetings. Moreover, asset size did not necessarily correlate to meeting frequency. For example, Freddie Mac (the largest asset size institution in the survey) held just five meetings in 1999.

of meetings to hold each year to carry out its oversight responsibilities. The Finance Board further expects that notwithstanding the proposed reduction of the minimum number of meetings to be held each year, the OF board will continue to maintain its level of oversight of the OF and its operations, and observe all appropriate safety and soundness guidelines.

III. Regulatory Flexibility Act

The final rule would apply only to the OF, which does not come within the meaning of small entities as defined in the Regulatory Flexibility Act (RFA). *See* 5 U.S.C. 601(6). Therefore, in accordance with section 605(b) of the RFA, 5 U.S.C. 605(b), the Finance Board hereby certifies that this rule, when it becomes final, will not have significant economic impact on a substantial number of small entities under the RFA.

Paperwork Reduction Act

This final rule does not contain any collections of information pursuant to the Paperwork Reduction Act of 1995. *See* 33 U.S.C. 3501 *et seq.* Therefore, the Finance Board has not submitted any information to the Office of Management and Budget for review.

List of Subjects in 12 CFR Part 985

Federal Home Loan Banks.

Accordingly, the Finance Board hereby amends part 985, title 12, chapter IX, Code of Federal Regulations, as follows:

PART 985—THE OFFICE OF FINANCE

1. The authority citation for part 985 continues to read as follows:

Authority: 12 U.S.C. 1422b(a)(1).

2. Revise § 985.8(b) to read as follows:

§ 985.8 General duties of the OF board of directors.

* * * * *

(b) *Meetings and quorum.* The OF board of directors shall conduct its business by majority vote of its members at meetings convened in accordance with its bylaws, and shall hold no fewer than six in-person meetings annually. Due notice shall be given to the Finance Board by the Chair prior to each meeting. A quorum, for purposes of meetings of the OF board of directors, shall be not less than two members.

* * * * *

Dated: April 10, 2002.

By the Board of Directors of the Federal Housing Finance Board.

John T. Korsmo,

Chairman.

[FR Doc. 02–9328 Filed 4–16–02; 8:45 am]

BILLING CODE 6725–01–P

DEPARTMENT OF TRANSPORTATION

Federal Aviation Administration

14 CFR Part 23

[Docket No. CE181, Special Condition 23–115–SC]

Special Conditions; Raytheon Aircraft Models 200 and 300; Protection of Systems for High Intensity Radiated Fields (HIRF)

AGENCY: Federal Aviation Administration (FAA), DOT.

ACTION: Final special conditions; request for comments.

SUMMARY: These special conditions are issued to Elliott Aviation, Inc., Quad City Airport, P.O. Box 100, Moline, Illinois 61266, for a Supplemental Type Certificate for the Raytheon Aircraft Model 200, B200, 200C, B200C, 200CT, B200CT, B200T, 300, 300LW, B300 and B300C. This airplane will have novel and unusual design features when compared to the state of technology envisaged in the applicable airworthiness standards. These novel and unusual design features include the installation of electronic flight instrument system (EFIS) displays manufactured by Universal Avionics Corporation for which the applicable regulations do not contain adequate or appropriate airworthiness standards for the protection of these systems from the effects of high intensity radiated fields (HIRF). These special conditions contain the additional safety standards that the Administrator considers necessary to establish a level of safety equivalent to the airworthiness standards applicable to these airplanes.

DATES: The effective date of these special conditions is April 2, 2002. Comments must be received on or before May 17, 2002.

ADDRESSES: Comments may be mailed in duplicate to: Federal Aviation Administration, Regional Counsel, ACE–7, Attention: Rules Docket Clerk, Docket No. CE181, Room 506, 901 Locust, Kansas City, Missouri 64106. All comments must be marked: Docket No. CE181. Comments may be inspected in the Rules Docket weekdays, except Federal holidays, between 7:30 a.m. and 4:00 p.m.

FOR FURTHER INFORMATION CONTACT: Ervin Dvorak, Aerospace Engineer, Standards Office (ACE–110), Small Airplane Directorate, Aircraft Certification Service, Federal Aviation Administration, 901 Locust, Room 301, Kansas City, Missouri 64106; telephone (816) 329–4123.

SUPPLEMENTARY INFORMATION: The FAA has determined that notice and opportunity for prior public comment hereon are impracticable because these procedures would significantly delay issuance of the approval design and thus delivery of the affected aircraft. In addition, the substance of these special conditions has been subject to the public comment process in several prior instances with no substantive comments received. The FAA, therefore, finds that good cause exists for making these special conditions effective upon issuance.

Comments Invited

Interested persons are invited to submit such written data, views, or arguments as they may desire. Communications should identify the regulatory docket or notice number and be submitted in duplicate to the address specified above. All communications received on or before the closing date for comments will be considered by the Administrator. The special conditions may be changed in light of the comments received. All comments received will be available in the Rules Docket for examination by interested persons, both before and after the closing date for comments. A report summarizing each substantive public contact with FAA personnel concerning this rulemaking will be filed in the docket. Commenters wishing the FAA to acknowledge receipt of their comments submitted in response to this action must include a self-addressed, stamped postcard on which the following statement is made: ''Comments to Docket No. CE181.'' The postcard will be date stamped and returned to the commenter.

Background

On December 28, 2001, Elliott Aviation, Inc., Quad City Airport, P.O. Box 100, Moline, Illinois 61266, made an application to the FAA for a new Supplemental Type Certificate for the Raytheon Aircraft Model 200, B200, 200C, B200C, 200CT, B200CT, B200T, 300, 300LW, B300, and B300C. The aircraft is currently approved under TC No. A24CE, revision 78. The proposed modification incorporates a novel or unusual design feature, such as digital avionics consisting of an EFIS, that is

vulnerable to HIRF external to the airplane.

Type Certification Basis

Under the provisions of 14 CFR part 21, § 21.101, Elliott Aviation, Inc. must show that the Raytheon 200 and 300 series aircraft meet the following provisions, or the applicable regulations in effect on the date of application for the change to the Model 200 and 300.

Model 200 Series: 14 CFR part 23 effective February 1, 1965, as amended by 23–1 through 23–9, Amendment 23–11, 14 CFR part 23, § 23.175, and associated part 23 §§ 23.143(a), 23.145(d), 23.153, 23.161(c)(3), and 23.173(a) as amended by Amendment 23–14; § 23.951(c) and § 23.997(d) as amended by Amendment 23–15 (A200CT and B200 series only); § 23.1545(a) as amended by Amendment 23–23, and § 23.1325(e) as amended by Amendment 23–20 (B200 Series only); § 23.1305(n) as amended by Amendment 23–26; FAA Special Conditions 23–47–CE–5 issued October 30, 1972, Amendment 1 dated December 18, 1973, and Amendment 2 dated January 12, 1979; 14 CFR part 25, §§ 25.929 and 25.1419 as amended to December 31, 1972, and § 25.831(d) through Amendment 25–41 (for all Model 200 and B200 series aircraft approved for 35,000 feet); SFAR 27 through Amendment 27–4; and 14 CFR part 36 through Amendment 36–10. For B200 through Serial Number BB–1438 and B200C through Serial Number BL–138, part 36 through amendment 36–10. For B200 Serial Numbers BB–1439, BB–1444 and after, B200C Serial Numbers BL–139 and after, A200CT Serial Numbers FE–25 and after, part 36 through Amendment 36–20. Compliance with ice protection has been demonstrated in accordance with § 25.1419 when ice protection equipment is installed in accordance with the airplane equipment list. Effective April 20, 1993, Electronic Flight Instrument Systems shall meet the requirements of §§ 23.1301, 23.1309, 23.1311, 23.1321, 23.1322, and 23.1335 as amended through Amendment 23–41 and Special Condition 23–ACW–68. Effective January 20, 1994, § 23.1457 as amended by Amendment 23–35. In addition, part 135 Appendix A, effective December 1, 1978 (B200 High Density Configuration). Equivalent Safety Findings: § 23.621 (BB–2 through BB–1042 only); § 23.997(d) (all models except A200CT and B200 series); § 23.1443 through Amendment 23–9–200 (BB–38, BB–39, BB–42, BB–44, BB–54 and after), 200C, 200CT, 200T, plus any earlier Model 200 modified by Beechcraft kits 101–5007 and 101–5008 in compliance with Beech Service instruction No. 0776–341. Model UC–12F (BU–1 through BU–12). Not Applicable to B200 Series. Special conditions adopted by this rulemaking action.

Model 300 and 300LW: Special Federal Aviation Regulation (SFAR) 41C, effective September 13, 1982 (300 only); 14 CFR part 23 effective February 1, 1965, through Amendment 23–9; Amendment 23–11; Amendment 23–14, §§ 23.143(a), 23.145(d), 23.153, 23.161(c)(3), 23.173(a), 23.175, 23.427, 23.441, and 23.445; Amendment 23–15, § 23.951(c) and § 23.997(d); §§ 23.1301, 23.1309, 23.1311, 23.1321, and 23.1322 to Amendment 23–49; Amendment 23–23, § 23.1545(a); Amendment 23–26, §§ 23.967 and 23.1305(n); Special Conditions No. 23–47–CE–5, including Amendments Nos. 1, 2, 3 dated November 15, 1982, and 4 dated October 17, 1986; 14 CFR part 25, § 25.929, effective February 1, 1965, Amendment 25–23, § 25.1419; Amendment 25–41, § 25.831(d); 14 CFR part 36 through Amendment 36–10, and SFAR 27 through Amendment 27–4. Compliance with ice protection has been demonstrated in accordance with part 25, § 25.1419 when ice protection equipment is installed in accordance with the Equipment List. Special conditions adopted by this rulemaking action.

Model B300 and B300C: 14 CFR part 23 effective February 1, 1965, as amended by Amendments 23–1 through 23–34; 14 CFR part 36 effective December 1, 1969, as amended by Amendment 36–1 through 36–15; SFAR 27 effective February 1, 1974, as amended by Amendments 27–1 through 27–6 and Exemption No. 5077 from compliance with section 23.207(c). Special Conditions 23–ACE–48A effective August 13, 1990, apply to Electronic Flight Instrument System (EFIS) equipped airplanes. Part 23, §§ 23.201, 23.203, 23.205 through amendment 23–45 (S/N FN–1 and up only). Effective January 20, 1994, § 23.1457 as amended by Amendment 23.35. Sections 23.1301, 23.1309, 23.1311, 23.1321, and 23.1322 to Amendment 23–49. Exemption 5599 from compliance with § 23.53(c)(1), for use of ground minimum control speed (V_{mcg}) for determination of takeoff decision speed (V_1), (serials FL–111, FM–9, FN–2 and after, or prior airplanes modified by Beech Kit No. 130–3004). Compliance with ice protection has been demonstrated in accordance with the Equipment List. Equivalent Level of Safety Findings: § 23.781(b) for shape of the propeller control knob; § 23.1305(g) for use of fuel low pressure warning annunciators in lieu of the fuel pressure indicators; § 23.1321(d) for the basic ''T'' instrument panel arrangement. Special conditions adopted by this rulemaking action.

Discussion

If the Administrator finds that the applicable airworthiness standards do not contain adequate or appropriate safety standards because of novel or unusual design features of an airplane, special conditions are prescribed under the provisions of § 21.16.

Special conditions, as appropriate, as defined in § 11.19, are issued in accordance with § 11.38 after public notice and become part of the type certification basis in accordance with § 21.101.

Special conditions are initially applicable to the model for which they are issued. Should the applicant apply for a supplemental type certificate to modify any other model already included on the same type certificate to incorporate the same novel or unusual design feature, the special conditions would also apply to the other model under the provisions of § 21.101.

Novel or Unusual Design Features

Elliott Aviation, Inc. plans to incorporate certain novel and unusual design features into an airplane for which the airworthiness standards do not contain adequate or appropriate safety standards for protection from the effects of HIRF. These features include EFIS, which are susceptible to the HIRF environment, that were not envisaged by the existing regulations for this type of airplane.

Protection of Systems from High Intensity Radiated Fields (HIRF): Recent advances in technology have given rise to the application in aircraft designs of advanced electrical and electronic systems that perform functions required for continued safe flight and landing. Due to the use of sensitive solid state advanced components in analog and digital electronics circuits, these advanced systems are readily responsive to the transient effects of induced electrical current and voltage caused by the HIRF. The HIRF can degrade electronic systems performance by damaging components or upsetting system functions.

Furthermore, the HIRF environment has undergone a transformation that was not foreseen when the current requirements were developed. Higher energy levels are radiated from transmitters that are used for radar, radio, and television. Also, the number of transmitters has increased significantly. There is also uncertainty

concerning the effectiveness of airframe shielding for HIRF. Furthermore, coupling to cockpit-installed equipment through the cockpit window apertures is undefined.

The combined effect of the technological advances in airplane design and the changing environment has resulted in an increased level of vulnerability of electrical and electronic systems required for the continued safe flight and landing of the airplane. Effective measures against the effects of exposure to HIRF must be provided by the design and installation of these systems. The accepted maximum energy levels in which civilian airplane system installations must be capable of operating safely are based on surveys and analysis of existing radio frequency emitters. These special conditions require that the airplane be evaluated under these energy levels for the protection of the electronic system and its associated wiring harness. These external threat levels, which are lower than previous required values, are believed to represent the worst case to which an airplane would be exposed in the operating environment.

These special conditions require qualification of systems that perform critical functions, as installed in aircraft, to the defined HIRF environment in paragraph (1) or, as an option to a fixed value using laboratory tests, in paragraph (2), as follows:

(1) The applicant may demonstrate that the operation and operational capability of the installed electrical and electronic systems that perform critical functions are not adversely affected when the aircraft is exposed to the HIRF environment defined below:

Frequency	Field strength (volts per meter)	
	Peak	Average
10 kHz–100 kHz	50	50
100 kHz–500 kHz	50	50
500 kHz–2 MHz	50	50
2 MHz–30 MHz	100	100
30 MHz–70 MHz	50	50
70 MHz–100 MHz	50	50
100 MHz–200 MHz	100	100
200 MHz–400 MHz	100	100
400 MHz–700 MHz	700	50
700 MHz–1 GHz	700	100
1 GHz–2 GHz	2000	200
2 GHz–4 GHz	3000	200
4 GHz–6 GHz	3000	200
6 GHz–8 GHz	1000	200
8 GHz–12 GHz	3000	300
12 GHz–18 GHz	2000	200
18 GHz–40 GHz	600	200

The field strengths are expressed in terms of peak root-mean-square (rms) values.

or,

(2) The applicant may demonstrate by a system test and analysis that the electrical and electronic systems that perform critical functions can withstand a minimum threat of 100 volts per meter, peak electrical field strength, from 10 kHz to 18 GHz. When using this test to show compliance with the HIRF requirements, no credit is given for signal attenuation due to installation.

A preliminary hazard analysis must be performed by the applicant, for approval by the FAA, to identify either electrical or electronic systems that perform critical functions. The term ''critical'' means those functions whose failure would contribute to, or cause, a failure condition that would prevent the continued safe flight and landing of the airplane. The systems identified by the hazard analysis that perform critical functions are candidates for the application of HIRF requirements. A system may perform both critical and non-critical functions. Primary electronic flight display systems, and their associated components, perform critical functions such as attitude, altitude, and airspeed indication. The HIRF requirements apply only to critical functions.

Compliance with HIRF requirements may be demonstrated by tests, analysis, models, similarity with existing systems, or any combination of these. Service experience alone is not acceptable since normal flight operations may not include an exposure to the HIRF environment. Reliance on a system with similar design features for redundancy as a means of protection against the effects of external HIRF is generally insufficient since all elements of a redundant system are likely to be exposed to the fields concurrently.

Applicability

As discussed above, these special conditions are applicable to Raytheon Aircraft models 200, B200, 200C, B200C, 200CT, B200CT, B200T, 300, 300LW, B300, B300C. Should Elliott Aviation, Inc. apply at a later date for a supplemental type certificate to modify any other model on the same type certificate to incorporate the same novel or unusual design feature, the special conditions would apply to that model as well under the provisions of § 21.101.

Conclusion

This action affects only certain novel or unusual design features on one model of airplane. It is not a rule of general applicability and affects only the applicant who applied to the FAA for approval of these features on the airplane.

The substance of these special conditions has been subjected to the notice and comment period in several prior instances and has been derived without substantive change from those previously issued. It is unlikely that prior public comment would result in a significant change from the substance contained herein. For this reason, and because a delay would significantly affect the certification of the airplane, which is imminent, the FAA has determined that prior public notice and comment are unnecessary and impracticable, and good cause exists for adopting these special conditions upon issuance. The FAA is requesting comments to allow interested persons to submit views that may not have been submitted in response to the prior opportunities for comment described above.

List of Subjects in 14 CFR Part 23

Aircraft, Aviation safety, Signs and symbols.

Citation

The authority citation for these special conditions is as follows:

Authority: 49 U.S.C. 106(g), 40113 and 44701; 14 CFR 21.16 and 21.101; and 14 CFR 11.38 and 11.19.

The Special Conditions

Accordingly, pursuant to the authority delegated to me by the Administrator, the following special conditions are issued as part of the type certification basis for the Raytheon Aircraft Model 200, B200, 200C, B200C, 200CT, B200CT, B200T, 300, 300LW, B300, and B300C airplane modified by Elliott Aviation, Inc. to add an EFIS.

1. Protection of Electrical and Electronic Systems from High Intensity Radiated Fields (HIRF). Each system that performs critical functions must be designed and installed to ensure that the operations, and operational capabilities of these systems to perform critical functions, are not adversely affected when the airplane is exposed to high intensity radiated electromagnetic fields external to the airplane.

2. For the purpose of these special conditions, the following definition applies: *Critical Functions:* Functions whose failure would contribute to, or cause, a failure condition that would prevent the continued safe flight and landing of the airplane.

Issued in Kansas City, Missouri on April 2, 2002.

Michael Gallagher,

Manager, Small Airplane Directorate, Aircraft Certification Service.

[FR Doc. 02–9115 Filed 4–16–02; 8:45 am]

BILLING CODE 4910–13–P

DEPARTMENT OF TRANSPORTATION

Federal Aviation Administration

14 CFR Part 39

[Docket No. 2001–SW–67–AD; Amendment 39–12710; AD 2002–08–03]

RIN 2120–AA64

Airworthiness Directives; Enstrom Helicopter Corporation Model F–28, F–28A, F–28C, F–28F, 280, 280C, 280F, and 280FX Helicopters

AGENCY: Federal Aviation Administration, DOT.

ACTION: Final rule; request for comments.

SUMMARY: This amendment supersedes an existing airworthiness directive (AD) for Enstrom Helicopter Corporation (EHC) Model F–28, F–28A, F–28C, F–28F, 280, 280C, 280F, and 280FX helicopters. That AD currently requires determining the radius of the shaft fillet, performing certain visual and dye-penetrant inspections before further flight, and replacing certain main rotor transmissions. This amendment requires the same actions as the previous AD, adds additional main rotor gear box part numbers, and corrects various errors contained in the current AD. This amendment is prompted by a commenter who noted that two additional main rotor gear box part numbers should have been included in the AD. The actions specified by this AD are intended to prevent shaft failure and subsequent loss of control of the helicopter.

DATES: Effective May 2, 2002.

Comments for inclusion in the Rules Docket must be received on or before June 17, 2002.

ADDRESSES: Submit comments in triplicate to the Federal Aviation Administration (FAA), Office of the Regional Counsel, Southwest Region, Attention: Rules Docket No. 2001–SW–67–AD, 2601 Meacham Blvd., Room 663, Fort Worth, Texas 76137. You may also send comments electronically to the Rules Docket at the following address: 9–asw–adcomments@faa.gov.

FOR FURTHER INFORMATION CONTACT: Joseph McGarvey, Fatigue Specialist, FAA, Chicago Aircraft Certification Office, Airframe and Administrative Branch, 2300 East Devon Ave., Des Plaines, Illinois 60018, telephone (847) 294–7136, fax (847) 294–7834.

SUPPLEMENTARY INFORMATION: On October 16, 2001, the FAA issued AD 2001–22–01, Amendment 39–12479 (66 FR 54418, October 29, 2001), to require determining the radius of the shaft fillet, performing certain visual and dye-penetrant inspections before further flight, and replacing certain main rotor transmissions. That AD was prompted by the failure of a shaft on an EHC Model F–28A helicopter due to a fatigue crack. Previously, on August 16, 1976, the FAA issued AD 76–17–08, Amendment 39–2700 (41 FR 36015, August 26, 1976). On September 16, 1976, the FAA revised that AD by issuing AD 76–17–08 R1, Amendment 39–3043 (42 FR 51563, September 29, 1977). That AD was prompted by the FAA's determination, after a review of the service experience, that shaft crack sites may be introduced by allowing the shafts to remain in service for extended periods without modification. That condition, if not corrected, could result in shaft failure and subsequent loss of control of the helicopter. AD 2001–22–01 superseded AD 76–17–08 and AD 76–17–08R1.

Since the issuance of AD 2001–22–01, Amendment 39–12479, the FAA received a comment that the AD should have cited additional part numbers (part number (P/N) 28–13101–3 and P/N 28–13101–3–R) in Table 1 of the AD. Further, Figure 1 of AD 2001–22–01 contained an error—''2.7mm'' is now corrected to state ''12.7mm''. This AD also corrects another part number and other minor typographical errors. Also, since the issuance of the previous AD, the manufacturer has revised its service information and issued Enstrom Helicopter Corporation Service Directive Bulletin No. 0094, Revision 2, dated February 15, 2002.

Since an unsafe condition has been identified that is likely to exist or develop on other helicopters of the same type designs, this AD supersedes AD 2001–22–01 to require the following:

- Before further flight, determine the transmission P/N and the radius of the shaft fillet.
- For certain models, replace any transmission having a shaft with a small radius fillet with an airworthy transmission before further flight.
- For certain other models, replace the transmission having a small radius shaft fillet that is not P/N 28–13101–1, P/N 28–13101–1–R, P/N 28–13101–3, or P/N 28–13101–3–R, with an airworthy transmission before further flight.
- For certain models with transmission, P/N 28–13101–1, P/N 28–13101–1–R, P/N 28–13101–3, or P/N 28–13101–3–R, having a small radius shaft fillet installed:
- Before further flight and at recurring intervals, visually inspect the shaft for a crack using a 10x or higher magnifying glass. If there is any indication of a crack, dye penetrant inspect the shaft before further flight, and if there is a crack, replace the transmission.
- Within 5 hours time-in-service (TIS), and thereafter at specified intervals, dye penetrant inspect the shaft for a crack and polish out specified nicks and scratches.
- If a crack is found or if a nick or scratch exceeds a specified limit, replace the transmission with an airworthy transmission before further flight.
- Within 300 hours TIS or at the next transmission overhaul, whichever occurs first, replace transmission, P/N 28–13101–1, P/N 28–13101–1–R, P/N 28–13101–3, or P/N 28–13101–3–R, with an airworthy transmission having a large radius shaft fillet.

Installing a transmission with a shaft, P/N 28–13104–1–1 or –P/N 28–13104–1–R, Revision K, L, M, N, P, R, or S or P/N 28–13140–1 or P/N 28–13140–1–R, is terminating action for the requirements of this AD. The short compliance time involved is required because the previously described critical unsafe condition can adversely affect the controllability and structural integrity of the helicopter. Therefore, determining the transmission P/N and the shaft fillet radius, conducting the required inspections, and replacing any unairworthy transmission with an airworthy transmission are required before further flight, and this AD must be issued immediately.

Since a situation exists that requires the immediate adoption of this regulation, it is found that notice and opportunity for prior public comment hereon are impracticable, and that good cause exists for making this amendment effective in less than 30 days.

The FAA estimates that 17 helicopters will be affected by this AD, that it will take approximately 1.4 work hours to accomplish the inspections and that the average labor rate is $60 per work hour. A replacement shaft will cost approximately $3,000 per helicopter, and overhauling the transmission and replacing the shaft will cost approximately $12,000. Based on these figures, the total cost impact of the AD on U.S. operators is estimated to be $256,428, assuming replacement of the

transmission (after an inspection) of every helicopter affected by this AD.

Comments Invited

Although this action is in the form of a final rule that involves requirements affecting flight safety and, thus, was not preceded by notice and an opportunity for public comment, comments are invited on this rule. Interested persons are invited to comment on this rule by submitting such written data, views, or arguments as they may desire. Communications should identify the Rules Docket number and be submitted in triplicate to the address specified under the caption **ADDRESSES.** All communications received on or before the closing date for comments will be considered, and this rule may be amended in light of the comments received. Factual information that supports the commenter's ideas and suggestions is extremely helpful in evaluating the effectiveness of the AD action and determining whether additional rulemaking action would be needed.

Comments are specifically invited on the overall regulatory, economic, environmental, and energy aspects of the rule that might suggest a need to modify the rule. All comments submitted will be available in the Rules Docket for examination by interested persons. A report that summarizes each FAA-public contact concerned with the substance of this AD will be filed in the Rules Docket.

Commenters wishing the FAA to acknowledge receipt of their mailed comments submitted in response to this rule must submit a self-addressed, stamped postcard on which the following statement is made: ''Comments to Docket No. 2001–SW–67–AD.'' The postcard will be date stamped and returned to the commenter.

The regulations adopted herein will not have a substantial direct effect on the States, on the relationship between the national Government and the States, or on the distribution of power and responsibilities among the various levels of government. Therefore, it is determined that this final rule does not have federalism implications under Executive Order 13132.

The FAA has determined that this regulation is an emergency regulation that must be issued immediately to correct an unsafe condition in aircraft, and that it is not a ''significant regulatory action'' under Executive Order 12866. It has been determined further that this action involves an emergency regulation under DOT Regulatory Policies and Procedures (44 FR 11034, February 26, 1979). If it is determined that this emergency regulation otherwise would be significant under DOT Regulatory Policies and Procedures, a final regulatory evaluation will be prepared and placed in the Rules Docket. A copy of it, if filed, may be obtained from the Rules Docket at the location provided under the caption **ADDRESSES.**

List of Subjects in 14 CFR Part 39

Air transportation, Aircraft, Aviation safety, Safety.

Adoption of the Amendment

Accordingly, pursuant to the authority delegated to me by the Administrator, the Federal Aviation Administration amends part 39 of the Federal Aviation Regulations (14 CFR part 39) as follows:

PART 39—AIRWORTHINESS DIRECTIVES

1. The authority citation for part 39 continues to read as follows:

Authority: 49 U.S.C. 106(g), 40113, 44701.

§ 39.13 [Amended]

2. Section 39.13 is amended by removing Amendment 39–12479 (66 FR 54418, October 29, 2001), and by adding a new airworthiness directive (AD), Amendment 39–12710, to read as follows:

2002–08–03 Enstrom Helicopter Corporation: Amendment 39–12710. Docket No. 2001–SW–67–AD. Supersedes AD 2001–22–01, Amendment 39–12479, Docket No. 2001–SW–28–AD.

Applicability: Model F–28, F–28A, F–28C, F–28F, 280, 280C, 280F, and 280FX helicopters, certificated in any category.

Note 1: This AD applies to each helicopter identified in the preceding applicability provision, regardless of whether it has been otherwise modified, altered, or repaired in the area subject to the requirements of this AD. For helicopters that have been modified, altered, or repaired so that the performance of the requirements of this AD is affected, the owner/operator must request approval for an alternative method of compliance in accordance with paragraph (e) of this AD. The request should include an assessment of the effect of the modification, alteration, or repair on the unsafe condition addressed by this AD; and if the unsafe condition has not been eliminated, the request should include specific proposed actions to address it.

Compliance: Required as indicated, unless accomplished previously.

To prevent main rotor shaft (shaft) failure and subsequent loss of control of the helicopter, accomplish the following:

(a) Before further flight, determine the part number (P/N) of the main rotor transmission (transmission) and the radius of the upper fillet of the shaft (as shown in the following Figure 1):

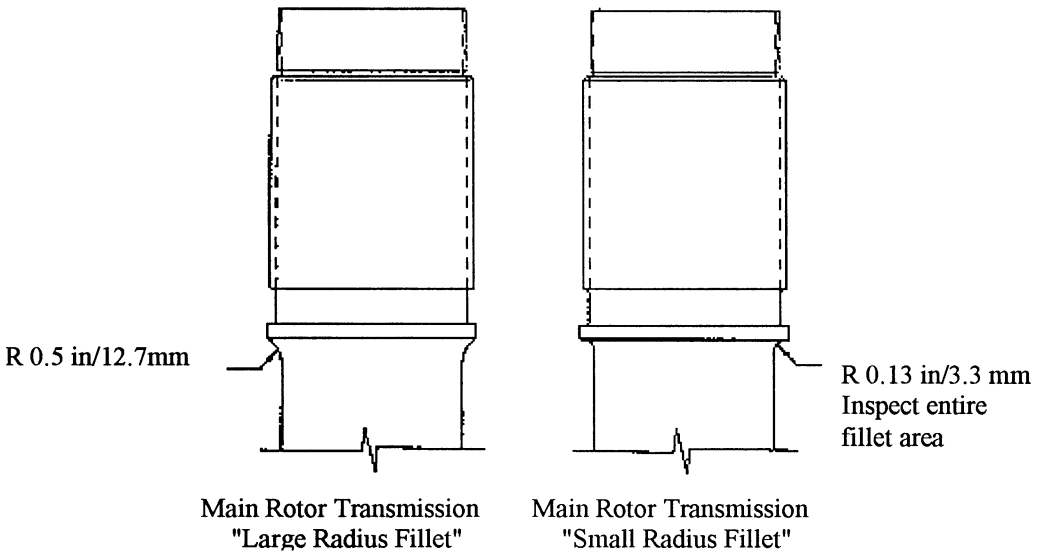

Figure 1. Main Rotor Shaft Inspection

(b) For EHC Model F–28C, F–28F, 280C, 280F, and 280FX helicopters, before further flight, replace any transmission having a small radius shaft fillet with an airworthy transmission having a large radius shaft fillet as specified in Table 1 of this AD.

(c) For EHC Model F–28, F–28A and 280 helicopters:

(1) If the transmission has a shaft with a small radius fillet and the transmission P/N is not listed in Table 1, before further flight, replace the transmission with an airworthy transmission specified in the following Table 1 of this AD:

TABLE 1.—MAIN ROTOR TRANSMISSION EFFECTIVITY

Description	Transmission P/N	Qty per assy	Models effectivity						
			F–28, F–28A	280	F–28C	280C	F–28F	280F	280FX
(i) Main Rotor Gearbox (0.13 in. radius fillet M/R shaft).	28–13101–1 or –1–R, or 28–13101–3 or –3–R.	1	X	X					
(ii) Main Rotor Gearbox (0.5 in. radius fillet M/R shaft).	28–13101–5 or –5–R*	1	X	X	X	X			
(iii) Main Rotor Gearbox (0.5 in. radius fillet M/R shaft).	28–13101–8 or –8–R	1	X	X	X	X	X	X	
(iv) Main Rotor Gearbox (0.5 in. radius fillet M/R shaft).	28–13101–9 or –9–R	1	X	X	X	X	X	X	
(v) Main Rotor Gearbox (0.5 in. radius fillet, heavy M/R shaft).	28–13101–101 or –101–R*.	1	X	X	X	X			
(vi) Main Rotor Gearbox (0.5 in. radius fillet M/R shaft).	28–13170–1 or –1–R	1	X	X	X	X	X	X	
(vii) Main Rotor Gearbox (0.5 in. radius fillet M/R shaft).	28–13170–3 or –3–R*	1	X	X	X	X	X	X	
(viii) Main Rotor Gearbox (0.5 in. radius fillet, heavy M/R shaft).	28–13170–7 or –7–R*	1	X	X	X	X	X	X	
(ix) Main Rotor Gearbox (0.5 in. radius fillet, heavy M/R shaft, magnetic chip detector, and low rotor RPM pick-up).	28–13170–9 or –9–R*	1					X		X

Note: ''–R'' indicates an overhauled transmission.
*Transmissions currently available from EHC.

(2) If the installed transmission is P/N 28–13101–1 or –1–R, or P/N 28–13101–3 or –3–R, and has a small radius shaft, before further flight and thereafter at intervals not to exceed 25 hours TIS, visually inspect each transmission for a crack in the shaft upper fillet using a 10X or higher magnifying glass.

(i) If there is any indication of a crack, before further flight, a level II nondestructive inspector must dye-penetrant inspect the shaft using materials approved by MIL–I–25135.

(ii) If the shaft is cracked, before further flight, replace the transmission with an airworthy transmission having a large radius shaft fillet.

(3) If the transmission is P/N 28–13101–1 or –1–R, or P/N 28–13101–3 or –3–R, within 5 hours TIS, and thereafter at intervals not to exceed 100 hours TIS:

(i) Dye-penetrant inspect the shaft upper fillet for a crack, a nick, or a scratch.

(ii) Polish out nicks or scratches less than 0.005-inch deep.

(iii) If the shaft is cracked or has a nick or scratch 0.005 inch or more deep, replace the transmission with an airworthy transmission having a large radius shaft fillet before further flight.

(4) Within 300 hours TIS or at the next overhaul after the effective date of this AD, whichever occurs first, replace transmission, P/N 28–13101–1 or –1–R, or P/N 28–13101–3 or –3–R, with an airworthy transmission having a large radius shaft fillet.

(d) Installing an airworthy transmission with a shaft, P/N 28–13104–1 or –1–R, Revision K, L, M, N, P, R or S, or P/N 28–13140–1 or –1–R, is terminating action for the requirements of this AD.

Note 2: Enstrom Helicopter Corporation Service Directive Bulletin No. 0094, Revision 2, dated February 15, 2002, pertains to the subject of this AD.

(e) An alternative method of compliance or adjustment of the compliance time that provides an acceptable level of safety may be used if approved by the Manager, Chicago, Aircraft Certification Office (ACO), FAA. Operators shall submit their requests through an FAA Principal Maintenance Inspector, who may concur or comment and then send it to the Manager, Chicago ACO.

Note 3: Information concerning the existence of approved alternative methods of compliance with this AD, if any, may be obtained from the Chicago ACO.

(f) Special flight permits may be issued in accordance with 14 CFR 21.197 and 21.199 to operate the helicopter to a location where the requirements of this AD can be accomplished provided an inspection in accordance with paragraph (c)(2) of this AD reveals no crack in the shaft.

(g) This amendment becomes effective on May 2, 2002.

Issued in Fort Worth, Texas, on April 9, 2002.

David A. Downey,

Manager, Rotorcraft Directorate, Aircraft Certification Service.

[FR Doc. 02–9144 Filed 4–16–02; 8:45 am]

BILLING CODE 4910–13–U

DEPARTMENT OF TRANSPORTATION

Federal Aviation Administration

14 CFR Part 39

[Docket No. 2001–CE–17–AD; Amendment 39–12708; AD 2002–08–01]

RIN 2120–AA64

Airworthiness Directives; Fairchild Aircraft, Inc. SA226 and SA227 Series Airplanes

AGENCY: Federal Aviation Administration, DOT.

ACTION: Final rule.

SUMMARY: This amendment adopts a new airworthiness directive (AD) that applies to certain Fairchild Aircraft, Inc. (Fairchild) SA226 and SA227 series airplanes equipped with Skidmore-Wilheim Manufacturing Co. (Skidmore-Wilheim) (formerly Hydromotive) Model V1–15–1000 brake master cylinders. This AD requires you to replace these brake master cylinders with new or overhauled units of the same design. This AD is the result of reports of dragging brakes during taxi operations. The actions specified by this AD are intended to correct and prevent future malfunctioning brake master cylinders. Malfunctioning brake master cylinders could cause dragging brakes, which can result in overheated brakes and a wheelwell fire if the dragging takes place during takeoff and the gear is later retracted.

DATES: This AD becomes effective on June 6, 2002.

The Director of the Federal Register approved the incorporation by reference of certain publications listed in the regulations as of June 6, 2002.

ADDRESSES: You may get the service information referenced in this AD from Fairchild Aircraft, Inc., P.O. Box 790490, San Antonio, Texas 78279–0490; telephone: (210) 824–9421; facsimile: (210) 820–8609. You may view this information at the Federal Aviation Administration (FAA), Central Region, Office of the Regional Counsel, Attention: Rules Docket No. 2001–CE–17–AD, 901 Locust, Room 506, Kansas City, Missouri 64106; or at the Office of the Federal Register, 800 North Capitol Street, NW., suite 700, Washington, DC.

FOR FURTHER INFORMATION CONTACT: Werner Koch, Aerospace Engineer, FAA, Airplane Certification Office, 2601 Meacham Boulevard, Fort Worth, Texas 76193–0150; telephone: (817) 222–5133; facsimile: (817) 222–5960.

SUPPLEMENTARY INFORMATION:

Discussion

What Events Have Caused This AD?

The FAA received several reports of dragging brakes on Fairchild SA226 series airplanes when the brake pedals were operated during taxi operations. After troubleshooting by maintenance personnel, the problem was traced to the brake master cylinder. Disassembly of the malfunctioning master cylinders revealed broken check valve spring washers that, together with the action of the shuttle valve, prevented the release of brake pressure. Based on observed failures, FAA has determined that the brake master cylinders should be replaced at intervals of 15,000 hours time-in-service.

What Is the Potential Impact if FAA Took No Action?

This condition, if not detected or corrected, could cause dragging brakes, which can result in overheated brakes and cause an in-flight wheelwell fire if the dragging takes place during takeoff and the gear is later retracted.

Has FAA Taken Any Action to This Point?

We issued a proposal to amend part 39 of the Federal Aviation Regulations (14 CFR part 39) to include an AD that would apply to certain Fairchild SA226 and SA227 series airplanes equipped with Skidmore-Wilheim Model V1–15–1000 brake master cylinders. This proposal was published in the **Federal Register** as a supplemental notice of proposed rulemaking (NPRM) on December 20, 2001 (66 FR 65663). The supplemental NPRM proposed to required you replace these brake master cylinders with new or overhauled units of the same design.

Was the Public Invited To Comment?

The FAA encouraged interested persons to participate in the making of this amendment. We did not receive any comments on the supplemental proposed rule or on our determination of the cost to the public.

FAA's Determination

What Is FAA's Final Determination on This Issue?

After careful review of all available information related to the subject presented above, we have determined that air safety and the public interest require the adoption of the rule as proposed except for minor editorial corrections. We have determined that these minor corrections:

—provide the intent that was proposed in the supplemental NPRM for correcting the unsafe condition; and

—do not add any additional burden upon the public than was already proposed in the supplemental NPRM.

Cost Impact

How Many Airplanes Does This AD Impact?

We estimate that this AD affects 140 airplanes in the U.S. registry.

What Is the Cost Impact of This AD on Owners/Operators of the Affected Airplanes?

We estimate the following costs to accomplish the replacements:

Labor cost	New or overhauled parts cost (4 parts for each aircraft required)	Total cost per airplane	Total cost on U.S. operators
8 workhours × $60 per hour = $480	4 parts × $200 = $800	$1,280	140 × $1,280 = $179,200.

Regulatory Impact

Does This AD Impact Various Entities?

The regulations adopted herein will not have a substantial direct effect on the States, on the relationship between the national government and the States, or on the distribution of power and responsibilities among the various levels of government. Therefore, it is determined that this final rule does not have federalism implications under Executive Order 13132.

Does This AD Involve a Significant Rule or Regulatory Action?

For the reasons discussed above, I certify that this action (1) is not a ''significant regulatory action'' under Executive Order 12866; (2) is not a ''significant rule'' under DOT Regulatory Policies and Procedures (44 FR 11034, February 26, 1979); and (3) will not have a significant economic impact, positive or negative, on a substantial number of small entities under the criteria of the Regulatory Flexibility Act. A copy of the final evaluation prepared for this action is contained in the Rules Docket. A copy of it may be obtained by contacting the Rules Docket at the location provided under the caption **ADDRESSES**.

List of Subjects in 14 CFR Part 39

Air transportation, Aircraft, Aviation safety, Incorporation by reference, Safety.

Adoption of the Amendment

Accordingly, under the authority delegated to me by the Administrator, the Federal Aviation Administration amends part 39 of the Federal Aviation Regulations (14 CFR part 39) as follows:

PART 39—AIRWORTHINESS DIRECTIVES

1. The authority citation for part 39 continues to read as follows:

Authority: 49 U.S.C. 106(g), 40113, 44701.

§ 39.13 [Amended]

2. FAA amends § 39.13 by adding a new AD to read as follows:

2002–08–01 Fairchild Aircraft, Inc.: Amendment 39–12708; Docket No. 2001–CE–17–AD.

(a) *What airplanes are affected by this AD?* This AD affects the following airplane models and serial numbers that are certificated in any category:

Model	Serial Nos.
SA226–AT	All.
SA226–T	All.
SA226–T(B)	All.
SA226–TC	All.
SA227–AC, SA227–AT, and SA227–TT.	420 through 583.

(b) *Who must comply with this AD?* Anyone who wishes to operate any of the airplanes identified in paragraph (a) of this AD must comply with this AD.

(c) *What problem does this AD address?* The actions specified by this AD are intended to correct and prevent future malfunctioning brake master cylinders. Malfunctioning brake master cylinders could cause dragging brakes, which can result in overheated brakes and a wheelwell fire if the dragging takes place during takeoff and the gear is later retracted.

(d) *What actions must I accomplish to address this problem?* To address this problem, you must accomplish the following:

Actions	Compliance	Procedures
Replace the Skidmore-Wilheim Manufacturing Co. Model V1–15–1000 brake master cylinders with new or overhauled Model V1–15–1000 brake master cylinders or FAA-approved equivalent part numbers.	Within the next 200 hours time-in-service (TIS) after June 6, 2002 (the effective date of this AD) or 15,000 hours total TIS on the affected brake master cylinders, whichever occurs later, unless already accomplished. Replace thereafter at intervals not to exceed 15,000 hours TIS.	For SA226 series airplanes, do this action following the procedures in the applicable maintenance manual. Overhaul the brake master cylinders following the procedures in Fairchild Service Bulletin 226–32–069, Issued: October 24, 2001. For SA227 series airplanes, do this action following the procedures in the applicable maintenance manual. Overhaul the brake master cylinders following the procedures in Fairchild Service Bulletin 227–32–045, Issued: October 24, 2001.

(e) *Can I comply with this AD in any other way?* You may use an alternative method of compliance or adjust the compliance time if:

(1) Your alternative method of compliance provides an equivalent level of safety; and

(2) The Manager, Fort Worth Airplane Certification Office (ACO), approves your alternative. Submit your request through an FAA Principal Maintenance Inspector, who may add comments and then send it to the Manager, Fort Worth ACO.

Note: This AD applies to each airplane identified in paragraph (a) of this AD, regardless of whether it has been modified, altered, or repaired in the area subject to the requirements of this AD. For airplanes that have been modified, altered, or repaired so that the performance of the requirements of this AD is affected, the owner/operator must request approval for an alternative method of compliance in accordance with paragraph (e) of this AD. The request should include an assessment of the effect of the modification, alteration, or repair on the unsafe condition addressed by this AD; and, if you have not eliminated the unsafe condition, specific actions you propose to address it.

(f) *Where can I get information about any already-approved alternative*

methods of compliance? Contact Werner Koch, Aerospace Engineer, FAA, Airplane Certification Office, 2601 Meacham Boulevard, Fort Worth, Texas 76193–0150; telephone: (817) 222–5133; facsimile: (817) 222–5960.

(g) *What if I need to fly the airplane to another location to comply with this AD?* The FAA can issue a special flight permit under sections 21.197 and 21.199 of the Federal Aviation Regulations (14 CFR 21.197 and 21.199) to operate your airplane to a location where you can accomplish the requirements of this AD.

(h) *Are any service bulletins incorporated into this AD by reference?* Actions required by this AD must be done in accordance with Fairchild Aircraft Service Bulletin 226–32–069 including Overhaul Instructions With Parts Breakdown, Issued: October 24, 2001, and Fairchild Aircraft Service Bulletin 227–32–045 including Overhaul Instructions With Parts Breakdown, Issued: October 24, 2001. The Director of the Federal Register approved this incorporation by reference under 5 U.S.C. 552(a) and 1 CFR part 51. You can get copies from Fairchild Aircraft, Inc., P.O. Box 790490, San Antonio, Texas 78279–0490. You can look at copies at the FAA, Central Region, Office of the Regional Counsel, 901 Locust, Room 506, Kansas City, Missouri, or at the Office of the Federal Register, 800 North Capitol Street, NW, suite 700, Washington, DC.

(i) *When does this amendment become effective?* This amendment becomes effective on June 6, 2002.

Issued in Kansas City, Missouri, on April 8, 2002.

James E. Jackson,

Acting Manager, Small Airplane Directorate, Aircraft Certification Service.

[FR Doc. 02–8988 Filed 4–16–02; 8:45 am]

BILLING CODE 4910–13–U

DEPARTMENT OF TRANSPORTATION

Federal Aviation Administration

14 CFR Part 39

[Docket No. 2002–SW–08–AD; Amendment 39–12711; AD 2002–06–52]

RIN 2120–AA64

Airworthiness Directives; Bell Helicopter Textron Canada Model 407 Helicopters

AGENCY: Federal Aviation Administration, DOT.

ACTION: Final rule; request for comments.

SUMMARY: This document publishes in the **Federal Register** an amendment adopting Airworthiness Directive (AD) 2002–06–52, which was sent previously to all known U.S. owners and operators of Bell Helicopter Textron Canada (BHTC) Model 407 helicopters by individual letters. This AD requires a one-time replacement of certain bearings and, before further flight, adding a limitation and caution to the rotorcraft flight manual (RFM) and at specified intervals, inspecting, replacing, and lubricating certain oil cooler blower bearings. This AD is prompted by several occurrences of failure of an oil cooler blower bearing. The actions specified by this AD are intended to prevent failure of an oil cooler blower bearing, loss of tail rotor drive, and a subsequent forced landing.

DATES: Effective May 2, 2002, to all persons except those persons to whom it was made immediately effective by Emergency AD 2002–06–52, issued on March 15, 2002, which contained the requirements of this amendment.

The incorporation by reference of certain publications listed in the regulations is approved by the Director of the Federal Register as of May 2, 2002.

Comments for inclusion in the Rules Docket must be received on or before June 17, 2002.

ADDRESSES: Submit comments in triplicate to the Federal Aviation Administration (FAA), Office of the Regional Counsel, Southwest Region, Attention: Rules Docket No. 2002–SW–08–AD, 2601 Meacham Blvd., Room 663, Fort Worth, Texas 76137. You may also send comments electronically to the Rules Docket at the following address: *9-asw-adcomments@faa.gov.*

The applicable service information may be obtained from Bell Helicopter Textron Canada, 12,800 Rue de l'Avenir, Mirabel, Quebec J7J1R4, telephone (450) 437–2862 or (800) 363–8023, fax (450) 433–0272. This information may be examined at the FAA, Office of the Regional Counsel, Southwest Region, 2601 Meacham Blvd., Room 663, Fort Worth, Texas; or at the Office of the Federal Register, 800 North Capitol Street, NW., suite 700, Washington, DC.

FOR FURTHER INFORMATION CONTACT: Paul Madej, Aviation Safety Engineer, FAA, Rotorcraft Directorate, Rotorcraft Standards Staff, Fort Worth, Texas 76193–0110, telephone (817) 222–5125, fax (817) 222–5961.

SUPPLEMENTARY INFORMATION: On February 10, 2000, the FAA issued Final Rule AD 2000–02–12 (65 FR 8032, February 17, 2000), to require inspecting each oil cooler blower bearing (bearing) for roughness and replacing any rough bearing before further flight. That AD was prompted by reports of failure of the bearing. Since the issuance of that AD, continued bearing failures and identifications of effects of engine exhaust gas ingestion have been reported. On March 15, 2002, the FAA issued superseding Emergency AD 2002–06–52 for BHTC Model 407 helicopters. That emergency AD requires a one-time replacement of certain bearings within 100 hours time-in-service, and before further flight, adding a limitation and caution to the RFM and at specified intervals, inspecting and, if necessary, replacing certain bearings and lubricating certain bearings. That action was prompted by several occurrences of failure of an oil cooler blower bearing. Particular tailwind conditions during flight can result in engine exhaust gas ingestion by the oil cooler blower and deterioration of the bearing grease. This condition, if not corrected, could result in bearing failure, loss of tail rotor drive, and a subsequent forced landing.

The FAA has reviewed Bell Helicopter Textron Alert Service Bulletin (ASB) Nos. 407–01–44, Revision A, dated October 25, 2001; 407–01–47, dated November 9, 2001; and 407–02–49, dated January 7, 2002. ASB 407–01–44, Revision A, dated October 25, 2001, specifies replacing specific oil cooler blower bearings and clarifies and expands the bearing lubrication procedure and schedule. ASB 407–01–47, dated November 9, 2001, updates the inspection and lubrication procedures and schedule for specified bearings at all oil cooler blower and tail rotor driveshaft locations. ASB 407–02–49, dated January 7, 2002, introduces a new limitation and a new caution for tailwind operations in the RFM and maintenance actions for exceeding the limitations.

Transport Canada, which is the airworthiness authority for Canada, notified the FAA that an unsafe condition may exist on this helicopter model. Transport Canada advises that testing indicates premature failure of an oil cooler blower bearing can occur, under certain conditions, due to ingesting exhaust gases into the aft fairing inlet resulting in elevated temperatures. Also, Transport Canada advises that research indicates that over-greasing the bearing can result in elevated bearing temperatures and failure of a bearing. Transport Canada classified the service bulletins as mandatory and issued AD No. CF–2002–18, dated March 4, 2002, to ensure

the continued airworthiness of these helicopters.

This helicopter model is manufactured in Canada and is type certificated for operation in the United States under the provisions of 14 CFR 21.29 and the applicable bilateral agreement. Pursuant to the applicable bilateral agreement, Transport Canada has kept the FAA informed of the situation described above. The FAA has examined the findings of Transport Canada, reviewed all available information, and determined that AD action is necessary for products of this type design that are certificated for operation in the United States.

This unsafe condition is likely to exist or develop on other BHTC Model 407 helicopters of the same type design registered in the United States. Therefore, the FAA issued Emergency AD 2002–06–52 to prevent failure of an oil cooler blower bearing, loss of tail rotor drive, and a subsequent forced landing. The AD requires:

- Before further flight, adding the tailwind limitation and caution contained in Temporary Revision 9 (the temporary revision is attached to ASB 407–02–49, dated January 7, 2002) to the RFM.
- At specified intervals, inspecting the oil cooler blower bearings; and if a bearing is rough, a seal is torn, the expelled grease has turned black, or metal particles are visible in the expelled grease, replacing the affected bearing before further flight.
- At a specified time-in-service, replacing certain bearings.
- At specified intervals, lubricating the bearings.

The actions must be accomplished in accordance with the ASBs described previously. The short compliance time involved is required because the previously described critical unsafe condition can adversely affect the structural integrity and controllability of the helicopter. Therefore, the actions previously described are required at the specified time intervals, and this AD must be issued immediately.

Since it was found that immediate corrective action was required, notice and opportunity for prior public comment thereon were impracticable and contrary to the public interest, and good cause existed to make the AD effective immediately by individual letters issued on March 15, 2002, to all known U.S. owners and operators of BHTC Model 407 helicopters. These conditions still exist, and the AD is hereby published in the **Federal Register** as an amendment to 14 CFR 39.13 to make it effective to all persons.

The FAA estimates that 281 helicopters of U.S. registry will be affected by this AD. It will take approximately 1 work hour for each RFM revision; 2 work hours per helicopter for the initial inspection; 0.5 hour for each repetitive inspection; 0.5 hour to lubricate the oil cooler blower bearing; and 4 work hours per helicopter to replace the oil cooler blower bearing. Required parts will cost approximately $1,926 per helicopter. Based on these figures, the total cost impact of the AD on U.S. operators is estimated to be $996,426, assuming 20 repetitive inspections and 20 bearing lubrications on each helicopter and bearing replacement on all the helicopters in the fleet.

Comments Invited

Although this action is in the form of a final rule that involves requirements affecting flight safety and, thus, was not preceded by notice and an opportunity for public comment, comments are invited on this rule. Interested persons are invited to comment on this rule by submitting such written data, views, or arguments as they may desire. Communications should identify the Rules Docket number and be submitted in triplicate to the address specified under the caption **ADDRESSES.** All communications received on or before the closing date for comments will be considered, and this rule may be amended in light of the comments received. Factual information that supports the commenter's ideas and suggestions is extremely helpful in evaluating the effectiveness of the AD action and determining whether additional rulemaking action would be needed.

Comments are specifically invited on the overall regulatory, economic, environmental, and energy aspects of the rule that might suggest a need to modify the rule. All comments submitted will be available in the Rules Docket for examination by interested persons. A report that summarizes each FAA-public contact concerned with the substance of this AD will be filed in the Rules Docket.

Commenters wishing the FAA to acknowledge receipt of their mailed comments submitted in response to this rule must submit a self-addressed, stamped postcard on which the following statement is made: ''Comments to Docket No. 2002-SW–08-AD.'' The postcard will be date stamped and returned to the commenter.

The regulations adopted herein will not have a substantial direct effect on the States, on the relationship between the national Government and the States, or on the distribution of power and responsibilities among the various levels of government. Therefore, it is determined that this final rule does not have federalism implications under Executive Order 13132.

The FAA has determined that this regulation is an emergency regulation that must be issued immediately to correct an unsafe condition in aircraft, and that it is not a ''significant regulatory action'' under Executive Order 12866. It has been determined further that this action involves an emergency regulation under DOT Regulatory Policies and Procedures (44 FR 11034, February 26, 1979). If it is determined that this emergency regulation otherwise would be significant under DOT Regulatory Policies and Procedures, a final regulatory evaluation will be prepared and placed in the Rules Docket. A copy of it, if filed, may be obtained from the Rules Docket at the location provided under the caption **ADDRESSES.**

List of Subjects in 14 CFR Part 39

Air transportation, Aircraft, Aviation safety, Incorporation by reference, Safety.

Adoption of the Amendment

Accordingly, pursuant to the authority delegated to me by the Administrator, the Federal Aviation Administration amends part 39 of the Federal Aviation Regulations (14 CFR part 39) as follows:

PART 39—AIRWORTHINESS DIRECTIVES

1. The authority citation for part 39 continues to read as follows:

Authority: 49 U.S.C. 106(g), 40113, 44701.

§ 39.13 [Amended]

2. Section 39.13 is amended by adding a new airworthiness directive to read as follows:

2002–06–52 Bell Helicopter Textron Canada: Amendment 39–12711. Docket No. 2002–SW–08–AD. Supersedes AD 2000–02–12, Docket No. 99–SW–79–AD, Amendment 39–11579.

Applicability: Model 407 helicopters, with oil cooler blower bearing, part number (P/N) 406–040–339–ALL, 407–340–339–101 or –103, installed, certificated in any category.

Note 1: This AD applies to each helicopter identified in the preceding applicability provision, regardless of whether it has been otherwise modified, altered, or repaired in the area subject to the requirements of this AD. For helicopters that have been modified, altered, or repaired so that the performance of the requirements of this AD is affected, the owner/operator must request approval for an alternative method of compliance in

accordance with paragraph (f) of this AD. The request should include an assessment of the effect of the modification, alteration, or repair on the unsafe condition addressed by this AD; and if the unsafe condition has not been eliminated, the request should include specific proposed actions to address it.

Compliance: Required as indicated, unless accomplished previously.

To prevent oil cooler blower bearing failure, loss of tail rotor drive, and a subsequent forced landing, accomplish the following:

(a) Before further flight, insert the tailwind limitation and caution, contained in Temporary Revision (TR) 9, dated January 15, 2002, into the Bell Model 407 Rotorcraft Flight Manual (RFM), dated February 9, 1996.

Note 2: TR 9 is attached to Bell Helicopter Textron (BHT) Alert Service Bulletin (ASB) 407–02–49, dated January 7, 2002.

(b) Within 10 hours time-in-service (TIS), inspect the forward and aft oil cooler blower bearings by hand-rotating the driveshaft with the oil cooler driveshaft connected. If a bearing is rough, a seal is torn, the expelled grease has turned black, or metal particles are visible in the expelled grease, replace the affected bearing before further flight.

(c) At intervals not to exceed 25 hours TIS, for oil cooler blower bearings, P/N 406–040–339–ALL and 407–340–339–103:

(1) Inspect the bearings by hand-rotating the driveshaft in accordance with the Accomplishment Instructions, Part I, paragraph 2, of BHT ASB 407–01–47, dated November 9, 2001 (ASB 407–01–47). If a bearing is rough, a seal is torn, the expelled grease has turned black, or metal particles are visible in the expelled grease, replace the affected bearing before further flight.

(2) Lubricate the bearings in accordance with the Accomplishment Instructions, Part II, paragraph 2, of ASB 407–01–47.

(d) For oil cooler blower bearings, P/N 407–340–339–101:

(1) At intervals not to exceed 25 hours TIS, inspect the bearings by hand-rotating the driveshaft in accordance with the Accomplishment Instructions, Part II, paragraph 1, of BHT ASB 407–01–44, Revision A, dated October 25, 2001 (ASB 407–01–44, Revision A). If a bearing is rough, a seal is torn, the expelled grease has turned black, or metal particles are visible in the expelled grease, replace the affected bearing before further flight.

(2) At intervals not to exceed 100 hours TIS, lubricate the bearings in accordance with the Accomplishment Instructions, Part III, paragraphs 1 and 2, of ASB 407–01–44, Revision A.

(e) Within 100 hours TIS, replace the forward and aft oil cooler blower bearings, P/N 406–040–339–ALL and 407–340–339–103, if installed, with airworthy bearings, P/N 407–340–339–101. Continue to inspect and lubricate the bearings in accordance with paragraph (d) of this AD.

(f) An alternative method of compliance or adjustment of the compliance time that provides an acceptable level of safety may be used if approved by the Manager, Regulations Group, Rotorcraft Directorate, FAA. Operators shall submit their requests through an FAA Principal Maintenance Inspector, who may concur or comment and then send it to the Manager, Regulations Group.

Note 3: Information concerning the existence of approved alternative methods of compliance with this AD, if any, may be obtained from the Regulations Group.

(g) Special flight permits will not be issued.

(h) The inspections and lubrication of the oil cooler blower bearings shall be done in accordance with the Accomplishment Instructions, Part I, paragraph 2, of Bell Helicopter Textron Alert Service Bulletin 407–01–47, dated November 9, 2001 and Part II, paragraph 1, of Bell Helicopter Textron Alert Service Bulletin 407–01–44, Revision A, dated October 25, 2001. This incorporation by reference was approved by the Director of the Federal Register in accordance with 5 U.S.C. 552(a) and 1 CFR part 51. Copies may be obtained from Bell Helicopter Textron Canada, 12,800 Rue de l'Avenir, Mirabel, Quebec J7J1R4, telephone (450) 437–2862 or (800) 363–8023, fax (450) 433–0272. Copies may be inspected at the FAA, Office of the Regional Counsel, Southwest Region, Attention: Rules Docket No. 2002–SW–08–AD, 2601 Meacham Blvd., Room 663, Fort Worth, Texas 76137; or at the Office of the Federal Register, 800 North Capitol Street, NW., suite 700, Washington, DC.

(i) This amendment becomes effective on May 2, 2002, to all persons except those persons to whom it was made immediately effective by Emergency AD 2002–06–52, issued March 15, 2002, which contained the requirements of this amendment.

Note 4: The subject of this AD is addressed in Transport Canada AD CF–2002–18, dated March 4, 2002.

Issued in Fort Worth, Texas, on April 4, 2002.

David A. Downey,

Manager, Rotorcraft Directorate, Aircraft Certification Service.

[FR Doc. 02–9173 Filed 4–16–02; 8:45 am]

BILLING CODE 4910–13–U

DEPARTMENT OF TRANSPORTATION

Federal Aviation Administration

14 CFR Part 71

[Docket No. FAA–2001–9559; Airspace Docket No. 01–AWP–02]

Revision of VOR Federal Airway 105 and Jet Route 86, AZ; and the Establishment of Jet Routes 614 and 616

AGENCY: Federal Aviation Administration (FAA), DOT.

ACTION: Final rule.

SUMMARY: This action revises Federal Airway 105 (V–105) and Jet Route 86 (J–86) in the vicinity of Phoenix, AZ. The FAA is revising V–105 between the Drake and Phoenix, AZ, Very High Frequency Omnidirectional Radio Range and Tactical Air Navigation Aids (VORTAC) in order to enhance the management of aircraft operations in the Phoenix, AZ, terminal area. Additionally, the FAA is revising J–86 between Winslow, AZ, as part of the National Airspace Redesign effort and to improve system efficiency in the Pheonix, AZ, area. The FAA is also modifying the descriptions for J–58 and J–86, and renaming portions of J–58 and J–86 in the state of Florida. These modifications are also part of the National Airspace Redesign effort to improve system efficiency.

EFFECTIVE DATE: 0901 UTC, August 8, 2002.

FOR FURTHER INFORMATION CONTACT: Ken McElroy, Airspace and Rules Division, ATA–400, Office of Air Traffic Airspace Management, Federal Aviation Administration, 800 Independence Avenue, SW., Washington, DC 20591; telephone: (202) 267–8783.

SUPPLEMENTARY INFORMATION:

Background

V–105

On June 20, 2001, FAA–2001–9559, Airspace Docket No. 01–AWP–02, (66 FR 30654), was published in the **Federal Register**. In that airspace docket the FAA proposed to realign V–105 and J–86 in the Phoenix, AZ, area. The June 20, 2001, Notice of Proposed Rulemaking (NPRM) contained an inadvertent error in the proposed description of V–105. Specifically, the description transposed the magnetic and true radials of V–105. A supplemental NPRM (SNPRM) corrected that error. Interested parties were invited to participate in this rulemaking proceeding by submitting written comments on the proposal to the FAA. No comments were received. With the exception of editorial changes, this amendment is the same as that proposed in the notice.

Currently the navigational signal in the vicinity of the Gulf of Mexico is not sufficient to support the segment of J–58 between the Harvey, LA, VORTAC, and the Sarasota VORTAC. The same problem affects that segment of J–86 between the Leeville VORTAC and the Sarasota, FL, VORTAC. Due to the weak navigational signal coverage on these routes, they no longer pass flight inspection. In this action, the FAA revokes the route over the Gulf, and terminates the routes at the Harvey VORTAC (for J–58) and the Leeville VORTAC (for J–86) respectively.

To replace the revoked segments, over-water advanced navigation routes

were established under a separate action. These over-water navigation routes do not rely on ground based navigation facilities and are not subject to navigation signal coverage limitations. Additionally, in this action, the FAA will rename the route segments of J–58 and J–86 in Florida to J–614 and J–616, to avoid any confusion.

Final Rule

This action amends Title 14 Code of Federal Regulations (14 CFR) part 71 by revising V–105 and J–86 in the vicinity of Phoenix, AZ. The FAA is also revising J–58 by terminating the route at the Harvey, LA, VORTAC; revoking the segment of J–58 between the Harvey VORTAC and the Sarasota, FL, VORTAC; and renaming the route from the Sarasota VORTAC to the Dolphin, FL, VORTAC, J–614. Additionally, the FAA is revising J–86 between Winslow, AZ, and the Leeville, LA, VORTAC; revoking the segment of J–86 between the Leeville VORTAC and the Sarasota, FL, VORTAC; and renaming the J–86 route segment from the Sarasota VORTAC to the Dolphin, FL, VORTAC, J–616. These actions are necessary because J–58 and J–86 failed to pass flight inspection due to gaps in navigation signal coverage over the Gulf of Mexico. These changes are also part of the National Airspace Redesign effort to improve system efficiency and safety.

Jet routes and domestic VOR Federal Airways are published in paragraphs 2004 and 6010(a), respectively, of FAA Order 7400.9J, dated August 31, 2001, and effective September 16, 2001, which is incorporated by reference in 14 CFR 71.1. The jet routes and VOR Federal Airways listed in this document will be published subsequently in the Order.

The FAA has determined that this regulation only involves an established body of technical regulations for which frequent and routine amendments are necessary to keep them operationally current. Therefore, this regulation: (1) is not a ''significant regulatory action'' under Executive Order 12866; (2) is not a ''significant rule'' under DOT Regulatory Policies and Procedures (44 FR 11034; February 26, 1979); and (3) does not warrant preparation of a regulatory evaluation as the anticipated impact is so minimal. Since this is a routine matter that will only affect air traffic procedures and air navigation, it is certified that this rule, when promulgated, will not have a significant economic impact on a substantial number of small entities under the criteria of the Regulatory Flexibility Act.

Environmental Review

The FAA has determined that this action qualifies for categorical exclusion under the National Environmental Policy Act in accordance with FAA Order 1050.1D, Policies and Procedures for Considering Environmental Impacts. This airspace action is not expected to cause any potentially significant environmental impacts, and no extraordinary circumstances exist that warrant preparation of an environmental assessment.

List of Subjects in 14 CFR Part 71

Airspace, Incorporation by reference, Navigation (air).

Adoption of the Amendment

In consideration of the foregoing, the Federal Aviation Administration amends 14 CFR part 71 as follows:

PART 71—DESIGNATION OF CLASS A, CLASS B, CLASS C, CLASS D, AND CLASS E AIRSPACE AREAS; AIRWAYS; ROUTES; AND REPORTING POINTS

1. The authority citation for 14 CFR part 71 continues to read as follows:

Authority: 49 U.S.C. 106(g), 40103, 40113, 40120; E.O. 10854, 24 FR 9565, 3 CFR, 1959–1963 Comp., p.389.

§ 71.1 [Amended]

2. The incorporation by reference in 14 CFR 71.1 of Federal Aviation Administration Order 7400.9J, Airspace Designations and Reporting Points, dated August 31, 2001, and effective September 16, 2001, is amended as follows:

Paragraph 2004—Jet Routes

* * * * *

J–58 [REVISED]

From Oakland, CA, via Manteca, CA; Coaldale, NV; Wilson Creek, NV; Milford, UT; Farmington, NM; Las Vegas, NM; Panhandle, TX; Wichita Falls, TX; Ranger, TX; Alexandria, LA; Harvey, LA.

J–86 [REVISED]

From Beatty, NV; INT Beatty 131° and Boulder City, NV, 284° radials; Boulder City; Peach Springs, AZ; INT of Peach Springs 091° and Winslow, AZ, 301° radials, Winslow, AZ; El Paso, TX; Fort Stockton, TX; Junction, TX; Humble, TX; Leeville, LA.

J–614 [NEW]

Sarasota; Lee County, FL; to the INT Lee County 120° and Dolphin, FL, 293° radials; Dolphin.

J–616 [NEW]

Sarasota; INT Sarasota 103° and La Belle, FL, 313° radials; La Belle; to Dolphin, FL.

* * * * *

Paragraph 6010(a)—Domestic VOR Federal Airways

* * * * *

V–105 [REVISED]

From Tucson, AZ; INT Tucson 300° and Stanfield, AZ 145° radials; Stanfield; Phoenix, AZ; INT Phoenix 333° and Drake, AZ, 182° radials; Drake; 25 miles, 22 miles 85 MSL; Boulder City, NV; Las Vegas, NV; INT Las Vegas 266° and Beatty, NV, 142° radials; 17 miles, 105 MSL; Beatty; 105 MSL, Coaldale, NV; 82 miles, 110 MSL; to Mustang, NV.

* * * * *

Issued in Washington, DC, on April 5, 2002.

Reginald C. Matthews,

Manager, Airspace and Rules Division.

[FR Doc. 02–9122 Filed 4–16–02; 8:45 am]

BILLING CODE 4910–13–P

FEDERAL TRADE COMMISSION

16 CFR Part 312

Children's Online Privacy Protection Rule

AGENCY: Federal Trade Commission.

ACTION: Final rule amendment.

SUMMARY: The Federal Trade Commission (''the Commission'') issues a final amendment to the Children's Online Privacy Protection Rule (''the Rule'') to extend, until April 21, 2005, the time period during which website operators may use an e-mail message from the parent, coupled with additional steps, to obtain verifiable parental consent for the collection of personal information from children for internal use by the website operator.

EFFECTIVE DATE: April 21, 2002.

ADDRESSES: Requests for copies of the amended Rule and the Statement of Basis and Purpose should be sent to: Public Reference Branch, Federal Trade Commission, Room H–130, 600 Pennsylvania Avenue NW, Washington, DC 20580.

FOR FURTHER INFORMATION CONTACT: Elizabeth Delaney, (202) 326–2903, Rona Kelner, (202) 326–2752, or Mamie Kresses, (202) 326–2070, Division of Advertising Practices, Bureau of Consumer Protection, Federal Trade Commission, 600 Pennsylvania Avenue NW., Washington, DC 20580.

Statement of Basis and Purpose

I. Introduction

As part of the effort to protect children's online privacy, Congress enacted the Children's Online Privacy Protection Act of 1998, 15 U.S.C. 6501 *et seq.* (''COPPA''), to prohibit unfair or

deceptive acts or practices in connection with the collection, use, or disclosure of personally identifiable information from children on the Internet. On October 20, 1999, the Commission issued its final Rule implementing COPPA, which became effective on April 21, 2000.[1] The Rule imposes certain requirements on operators of websites or online services directed to children under 13 years of age, or other websites or online services that have actual knowledge that they have collected information from a child under 13 years of age. Among other things, the Rule requires that website operators obtain verifiable parental consent prior to collecting, using, or disclosing personal information from children under 13 years of age.

The Rule provides that, ''[a]ny method to obtain verifiable parental consent must be reasonably calculated, in light of available technology, to ensure that the person providing consent is the child's parent.''[2] In order to allow time for reliable electronic methods of verification to become widely available and affordable, the Rule sets forth a sliding scale approach to obtaining verifiable parental consent.[3] For uses of personal information that will involve disclosing the information to the public or third parties, the Rule requires that website operators use the more reliable methods of obtaining verifiable parental consent. These methods include: using a print-and-send form that can be faxed or mailed back to the website operator; requiring a parent to use a credit card in connection with a transaction; having a parent call a toll-free telephone number staffed by trained personnel; using a digital certificate that uses public key technology; and using e-mail accompanied by a PIN or password obtained through one of the above methods.[4]

In contrast, if the website operator is collecting personal information for its internal use only, the Rule allows verifiable parental consent to be obtained through the use of an e-mail message from the parent, coupled with additional steps. Such additional steps are designed to provide assurances that the person providing the consent is the parent and include: sending a confirmatory e-mail to the parent after receiving consent; or obtaining a postal address or telephone number from the parent and confirming the parent's consent by letter or telephone call.[5]

At the time it issued the final Rule, the Commission anticipated that the sliding scale was necessary only in the short term because the more reliable methods of obtaining verifiable parental consent would soon be widely available and affordable.[6] Accordingly, the sliding scale was set to expire on April 21, 2002, at which time website operators were to obtain verifiable parental consent using the more reliable methods for all uses of personal information.[7] However, when the expected progress in available technology did not occur, the Commission published a Notice of Proposed Rulemaking and Request for Public Comment (''NPR'') in the **Federal Register** on October 31, 2001, proposing to amend the Rule to extend the sliding scale mechanism for an additional two years to April 21, 2004.[8] The Commission requested public comment on the proposed extension of time as well as several questions regarding the current and anticipated availability and affordability of secure electronic mechanisms and/or infomediaries for obtaining parental consent. The 30-day comment period closed on November 30, 2001. The Commission received 21 comments from an array of interested parties, all of which were extremely informative and which the Commission has considered in crafting the final amended Rule. Those submitting comments included: the FTC-approved COPPA safe harbor programs; companies operating Internet sites or businesses; marketing and advertising trade groups; publishing groups; and educational organizations.[9]

II. The Amended Rule

In the October 2001 NPR, the Commission proposed a two-year extension of the sliding scale mechanism because it appeared that the expected progress in technology had not occurred to the extent necessary to phase out the sliding scale mechanism and require the most reliable methods of parental consent for all uses of personal information collected from children by websites. After careful consideration, the Commission has decided to extend the sliding scale mechanism for three years, from April 21, 2002 until April 21, 2005.

The Rule provides that, ''[a]ny method to obtain verifiable parental consent must be reasonably calculated, in light of available technology, to ensure that the person providing consent is the child's parent.''[10] In making its initial determination to adopt the sliding scale mechanism in the final rulemaking in November 1999, the Commission balanced the costs imposed by the method of obtaining parental consent and the risks associated with the intended uses of information.[11] Because of the limited availability and affordability of the more reliable methods of obtaining consent—including electronic methods of verification—the Commission found that these methods should only be required when obtaining consent for uses of information that posed the greatest risks to children.[12] Accordingly, the Commission implemented the sliding scale, noting that it would ''provide[] operators with cost-effective options until more reliable electronic methods became available and affordable, while providing parents with the means to protect their children.''[13] The Commission anticipated that reliable electronic methods of verification would soon become widely available and affordable and, accordingly, determined that a two-year sliding scale mechanism would be adequate.[14]

Having reviewed the rulemaking record, the Commission concludes that secure electronic mechanisms and/or infomediary services for obtaining verifiable parental consent are not yet widely available at a reasonable cost.[15]

[1] 64 FR 59888 (1999).

[2] 16 CFR 312.5(b)(1).

[3] In a Notice of Proposed Rulemaking and Request for Public Comment published in April 1999, the Commission provided examples of methods of obtaining verifiable parental consent that might satisfy the standard required by COPPA, and sought public comment on the feasibility, costs and benefits of these suggested methods. 64 FR 22750 (1999). In addition, in July 1999, the Commission held a workshop devoted entirely to the verifiable parental consent issue. 64 FR 34595 (1999) (announcement of the public workshop).

[4] 16 CFR 312.5(b)(2).

[5] *Id.*

[6] 64 FR 59902 (1999).

[7] 16 CFR 312.5(b)(2).

[8] 66 FR 54963 (2001).

[9] The comments are discussed below. In addition, a complete list of the commenters and their comments appear on the FTC's website at <www.ftc.gov>.

[10] 16 CFR 312.5(b)(1).

[11] 64 FR 59901, 59902 (1999).

[12] *Id.*

[13] *Id.* at 59902.

[14] *Id.*

[15] The overwhelming majority of commenters noted that secure electronic mechanisms and/or infomediary services have not yet developed to the point where they are widely available and affordable. Aftab & Savitt (Comment 1) at 1–2; America Online et al. (''AOL'') (Comment 2) at 1–2; Association of American Publishers (''AAP'') (Comment 4) at 1–2; Romain Carrere (Comment 6); Children's Advertising Review Unit (''CARU'') (Comment 7) at 2; Direct Marketing Association et al. (''DMA'') (Comment 9) at 2; Entertainment Software Rating Board (''ESRB'') (Comment 10) at 1–2; Gardner, Carton & Douglas (''Gardner'') (Comment 11) at 1; Leo Burnett Worldwide, Inc. (Comment 12); Magazine Publishers of America (''MPA'') (Comment 13); National Cable & Telecommunications Association (''NCTA'') (Comment 15) at 1–2; Online Privacy Alliance

Continued

In addition, the Commission finds that support for an extension of the sliding scale mechanism is widespread.[16] The record indicates that the sliding scale mechanism to date has been an effective method for obtaining parental consent.[17] At the same time, the Commission finds that the safety risk to children of a website collecting personal information for its internal use only remains low.[18] Websites that use an e-mail message from the parent, coupled with additional steps, to obtain parental consent may only use the personal information collected from the child for the internal use of the website, and cannot share or disclose this information to third parties or the public. If a website wishes to share or disclose personal information collected from a child, or allow a child a mechanism to make personal information publicly available (for example, through an email account, message board or chat room), the website must use the more reliable methods of obtaining consent. Indeed, the relatively lower cost of seeking permission for internal use of children's information may well be part of the reason why more websites do not seek permission to disclose information to third parties.

The Commission finds that the record also shows that the anticipated date for the development and deployment of secure electronic mechanisms and/or infomediary services on a widespread and affordable basis does not appear to be able to be predicted with any reasonable certainty at this point in time.[19] In light of the delayed development and deployment of secure electronic mechanisms and/or infomediary services for obtaining verifiable parental consent, the unpredictability of estimating when such technology will be widely available and affordable, and the effectiveness of the present sliding scale mechanism, the Commission has determined that an extension of the sliding scale mechanism is appropriate. Accordingly, the Commission will re-examine this issue when it conducts its statutorily mandated review of the Rule, no later than April 21, 2005.[20]

III. Regulatory Flexibility Act

The Regulatory Flexibility Act, 5 U.S.C. 601–612, requires agencies to prepare and make available to the public regulatory flexibility analyses at the proposed and final stages of a rulemaking proceeding, except in cases where the agency certifies that the Rule will not have a significant economic impact on a substantial number of small entities. 5 U.S.C. 605. In its notice of proposed rulemaking, the Commission certified that its proposed rule amendment to extend by two years the time period during which Web site operators could continue to obtain verifiable parental consent under a ''sliding scale'' of compliance options would not have a significant economic impact on a substantial number of small entities. 66 FR at 54964. Nonetheless, to ensure that no significant economic impact on a substantial number of small entities is overlooked, the Commission requested public comment on the effect of the proposed amendment to the Rule on the costs, profitability, and competitiveness of, and employment in, small entities. *Id.*

The Commission did not receive any comments directly addressing the

(''OPA'') (Comment 16) at 2; Privo (Comment 17) at 2–3; Promotion Marketing Association, Inc. (''PMA'') (Comment 18) at 2; Software & Information Industry Association (''SIIA'') (Comment 19) at 2–3; and TRUSTe (Comment 21).

However, one commenter noted that many children's websites had made the necessary adjustments and investments within the original timeframe provided by the Rule. Circle 1 Network (Comment 8). Another commenter said that digital signature technology is available from at least one company and should be implemented on a mandatory basis in cases where personal information is shared with third parties. Jennifer Melendez et al. (Comment 14). Three commenters did not address the issue of whether secure electronic mechanisms and/or infomediary services are widely available and affordable. Aristotle (Comment 3); Association of Educational Publishers (''AEP'') (Comment 5); and Office of Attorney General, State of Connecticut (Comment 20).

[16] Of the 21 comments received by the Commission, 20 addressed the issue of whether the sliding scale mechanism should be extended, and 19 of those commenters agreed that an extension was warranted. Only one commenter favored collapsing the sliding scale as originally scheduled. Circle 1 Network (Comment 8). Two other commenters supported extending the sliding scale mechanism for periods of time less than two years. Romain Carrere (Comment 6) and Privo (Comment 17) at 1 & 5. Six commenters supported the two-year extension as set out in the NPR. Aftab & Savitt (Comment 1); AAP (Comment 4) at 2; CARU (Comment 7) at 2; ESRB (Comment 10); Gardner (Comment 11); and Leo Burnett Worldwide, Inc. (Comment 12). An additional commenter supported the two-year extension, but only if the ''additional steps'' taken with e-mail plus were limited to telephone and postal mail follow-up, rather than a confirmatory e-mail. TRUSTe (Comment 21). One commenter suggested a 10-year extension, DMA (Comment 9) at 3, while eight commenters supported an indefinite or permanent extension. AOL et al. (Comment 2) at 1; AEP (Comment 5); MPA (Comment 13); Melendez et al. (Comment 14); NCTA (Comment 15) at 1–2; OPA (Comment 16) at 2; PMA (Comment 18) at 2; and SIIA (Comment 19) at 3. One commenter argued specifically against extending the sliding scale indefinitely, Office of Attorney General, State of Connecticut (Comment 20), while five other commenters noted the value of a finite extension. Aftab & Savitt (Comment 1) at 2; CARU (Comment 7) at 2; Gardner (Comment 11) at 1; Privo (Comment 17) at 5; and TRUSTe (Comment 21).

[17] AOL (Comment 2) at 2–3 (no ''complaints or other record evidence that the sliding scale mechanism is inadequate''); DMA (Comment 9) at 3 (''not aware of any harm from the use of e-mail plus consent''); Leo Burnett Worldwide, Inc. (Comment 12) (''sliding scale mechanism has been very effective''); NCTA (Comment 15) at 2 (''not aware of any complaints against member companies for infringement of children's on-line privacy''); and SIIA (Comment 19) at 3 (''present approach has worked well'').

Although none of the commenters articulated specific examples of misuse of the sliding scale mechanism, three commenters found the email plus method of obtaining parental consent to be ineffective and unreliable. Romain Carrere (Comment 6) (children can impersonate their parents); Privo (Comment 17) at 2–3 (''e-mail plus may not and often does not result in reliable verification'' and ''[i]t is commonplace for children to have the requisite knowledge to falsify their age or fabricate a spurious e-mail message that is allegedly from the parent or guardian''); and TRUSTe (Comment 21) (''it would be unwise to extend the lessened protection of 'email plus' rule two additional years, unless the rule is modified, so that a delayed email to the parent's email address is not considered sufficient verifiable parental consent'').

[18] Aftab & Savitt (Comment 1) at 1 (''Parents appreciate the convenience of the e-mail plus consent process, particularly as it is coupled with low-risk privacy concerns where information will not be disclosed.''); AEP (Comment 5) (''We believe the current 'sliding scale' approach—allowing Web operators who collect information for internal use only to pursue this less stringent form of consent—has proved an effective way to balance parental involvement with children's freedom to pursue educational experiences online.''); CARU (Comment 7) at 1 (''In adopting the sliding scale the Commission wisely acknowledged that the risks involved where an operator uses a child's personal information solely for its internal use, with no disclosure, were minimal.''); DMA (Comment 9) at 2–3 (''the e-mail plus consent mechanism for internal uses of information is successfully protecting children's privacy as intended by the Act.''); Gardner (Comment 11) at 2 (noting that sites that collect parental consent by e-mail plus may not share that information with third parties); MPA (Comment 13) (''e-mail based consent mechanism...effectively protects children's personal information''); NCTA (Comment 15) at 2 (noting that companies using e-mail plus can only use the data collected for internal purposes); PMA (Comment 18) at 1–2 (risk of harm to children from improper disclosure of their information is ''significantly lower when the child's information will not be released to any third parties''); and SIIA (Comment 19) at 3 (''sliding scale that provides for different methods between data gathered only for internal use and that which will be disclosed to third parties is 'appropriate to the circumstances'''').

[19] MPA (Comment13) at 2 (''New technologies have not yet developed to facilitate verifiable parental consent at a reasonable cost, and no widely and economically feasible verification technology even appears to be on the near horizon.''); OPA (Comment 16) at 2 (''no clear signals that the anticipated verification technology is likely to be economically and widely available in the consumer market in the forseeable future''); PMA (Comment 18) at 2 (''it is difficult, if not impossible, to predict accurately when such technologies will be both available and adopted by a significant percentage of consumers''); and SIIA (Comment 19) at 3 (''In reviewing developments over the last two years, there are no clear signals that the anticipated verification technology—technology that must be low-cost, widely deployed and acceptable to consumer end users—is likely to be economically and widely available in the consumer market in the foreseeable future.'').

[20] 16 CFR 312.11.

impact of the proposed amendment on small entities. To the extent, however, that any small entities are affected by the Rule, the Commission believes the public comments support its determination that the adoption of the rule amendment will not impose more significant or costly compliance methods on Web site operators than the Rule would otherwise impose if it were not amended. By adopting a final rule amendment that leaves currently effective compliance options in place for an additional three years, the Commission is preserving the *status quo* for all Web site operators, including any small entities. Thus, the change, if any, in the economic impact of the Rule resulting from the final rule amendment, will be less than if the Commission did not amend the Rule and the more burdensome requirements of the Rule as originally promulgated were allowed to take effect. Accordingly, for these reasons, the Commission certifies under the Regulatory Flexibility Act that the final rule amendment will not have a significant economic impact on a substantial number of small entities. 5 U.S.C. 605. This notice also serves as the required certification and statement of the Commission's determination to the Small Business Administration.

IV. Paperwork Reduction Act

This amendment does not amend any information collection requirements that have previously been reviewed and approved by the Office of Management and Budget pursuant to the Paperwork Reduction Act, as amended, 44 U.S.C. 3501 *et seq.*

Final Rule

List of Subjects in 16 CFR Part 312

Children, Communications, Consumer protection, Electronic mail, E-mail, Internet, Online service, Privacy, Record retention, Safety, Science and technology, Trade practices, Website, Youth.

Accordingly, the Federal Trade Commission amends 16 CFR Part 312 as follows:

PART 312—CHILDREN'S ONLINE PRIVACY PROTECTION RULE

1. The authority citation for this part continues to read as follows:

Authority: 15 U.S.C. 6501 *et seq.*

2. Amend § 312.5 by revising the second sentence of paragraph (b)(2) to read as follows:

§ 312.5 Parental consent.

* * * * *

(b) * * *

(2) * * * *Provided that:* For the period until April 21, 2005, methods to obtain verifiable parental consent for uses of information other than the ''disclosures'' defined by § 312.2 may also include use of e-mail coupled with additional steps to provide assurances that the person providing the consent is the parent. * * *

* * * * *

By direction of the Commission.

Donald S. Clark,

Secretary.

[FR Doc. 02–9272 Filed 4–16–02; 8:45 am]

BILLING CODE 6750–01–P

DEPARTMENT OF STATE

22 CFR Part 41

[Public Notice 3971]

Documentation of Nonimmigrants Under the Immigration and Nationality Act, as Amended: International Organizations; Interim Rule

AGENCY: Department of State.

ACTION: Interim rule with request for comments.

SUMMARY: In the interest of greater accuracy and clarity, this rule revises the recently added amendment relating to INTELSAT (following privatization) as an ''international organization.''

DATES: Effective April 17, 2002. Written comments may be submitted on or before June 17, 2002.

ADDRESSES: Written comments may be submitted, in duplicate, to the Chief, Legislation and Regulations Division, Visa Services, Department of State, Washington, DC 20520–0106, or by e-mail to *visaregs@state.gov*.

FOR FURTHER INFORMATION CONTACT: Elizabeth J. Harper, Legislation and Regulations Division, Visa Services, Department of State, Washington, DC 20520–0106, telephone 202–663–1221, e-mail *harperbj@state.gov*, or fax at 202–663–3898.

SUPPLEMENTARY INFORMATION: On January 11, 2002, the Department amended its regulation pertaining to international organizations to include INTELSAT following privatization (67 FR 1413). Following further internal considerations and consultation with INS, the Department feels it necessary to revise that regulation to clarify the status of the organization and the personnel affected.

Why Are Changes Necessary?

The regulation published earlier (22 CFR 41.24(a)) was intended, essentially, just to distinguish the fact that the source of authority for INTELSAT to retain a limited status as an international organization after privatization was Public Law 196–306 rather than a Presidential designation. The law, however, conferred the status of international organization on the privatized INTELSAT only in connection with a special immigrant classification for certain ''international organization aliens.'' At the same time, however, it allowed certain officers and employees of privatized INTELSAT to retain their G–4 visa status, despite the fact that INTELSAT no longer met the definition of ''international organization'' for purposes of visa classification under INA 101(a)(15)(G). In addition, the special legislation did not provide for G–5 status for servants of privatized INTELSAT officers and employees. Those limitations and subtleties although not included in the existing regulation, are included in this amendment to it. The Department recognizes that greater specificity is necessary for a full understanding of the effects of section 301 of Public Law 106–306.

Does Changing the Regulation Make any Difference? Wouldn't the Law Govern Anyway?

Yes it would. Nevertheless, it is best for purposes of administration and for full disclosure to the public that the regulation be made as unequivocal and thorough as possible. This revised version makes it explicit that INTELSAT is not an ''international organization'' for all purposes. This, in turn, means that the officers and employees of the privatized INTELSAT who are still classifiable as G–4s are not ''international organization aliens'' for all purposes, but only for the purpose of the special immigrant visa provisions of INA 101(a)(27)(I).

What Other Changes, if Any, Are There in This New Regulation?

In addition to clarifying the definition and the status of the G–4 officers and employees of the privatized INTELSAT, this regulation makes it clear that only officers and employees of INTELSAT who had been employed in G–4 status for at least six months prior to the time of privatization, and officers and employees who meet those criteria but moved to a successor or separated entity after at least six months such employment and after March 17, 2000, but prior to INTELSAT privatization, are still classifiable under INA 101(a)(15)(G)(iv). Newly hired officers and employees of the privatized INTELSAT and successor or separated

entities thereof, and officers and employees hired by INTELSAT less than six months prior to the date of privatization, are not entitled to such status.

Regulatory Analysis and Notices

Administrative Procedure Act

The Department is publishing this rule as an interim rule, with a 60-day provision for post-promulgation public comments, based on the ''good cause'' exceptions set forth at 5 U.S.C. 553(b)(3)(B) and 553(d)(3). The rule makes no substantive changes in visa operations. It merely rectifies any confusion deriving from the earlier amendment noting that a different statute conferred the designation of ''international organization'' in this instance.

Regulatory Flexibility Act

Pursuant to section 605 of the Regulatory Flexibility Act, the Department has assessed the potential impact of this rule, and the Assistant Secretary for Consular Affairs hereby certifies that is not expected to have a significant economic impact on a substantial number of small entities and will benefit those that engage temporary agricultural workers.

Unfunded Mandates Reform Act of 1995

This rule will not result in the expenditure by State, local, and tribal governments, in the aggregate, or by the private sector, of $100 million in any year and it will not significantly or uniquely affect small governments. Therefore, no actions were deemed necessary under the provisions of the Unfunded Mandates Reform Act of 1995.

Small Business Regulatory Enforcement Fairness Act of 1996

This rule is not a major rule as defined by section 804 of the Small Business Regulatory Enforcement Act of 1996. This rule will not result in an annual effect on the economy of $100 million or more; a major increase in costs or prices; or significant adverse effects on competition, employment, investment, productivity, innovation, or on the ability of United States-based companies to compete with foreign-based companies in domestic and export markets.

Executive Order 12866

The Department of State does not consider this rule to be a ''significant regulatory action'' under Executive Order 12866, section 3(f), Regulatory Planning and Review. In addition, the Department is exempt from Executive Order 12866 except to the extent that it is promulgating regulations in conjunction with a domestic agency that are significant regulatory actions. The Department has nevertheless reviewed the regulation to ensure its consistency with the regulatory philosophy and principles set forth in that Executive Order.

Executive Order 131332

This regulation will not have substantial direct effects on the States, on the relationship between the national government and the States, or on the distribution of power and responsibilities among the various levels of government. Therefore, in accordance with section 6 of Executive Order 13132, it is determined that this rule does not have sufficient federalism implications to require consultations or warrant the preparation of a federalism summary impact statement.

Paperwork Reduction Act

This rule does not impose any new reporting or record-keeping requirements subject to the Paperwork Reduction Act, 44 U.S.C. Chapter 35.

List of Subjects in 22 CFR Part 41

Aliens, Nonimmigrants, Passports and visas.

Accordingly, the Department amends 22 CFR Chapter I as follows:

PART 41—[AMENDED]

1. The authority citation for part 41 is revised to read:

Authority: 8 U.S.C. 1104; Pub. L. 105–277, 112 Stat. 2681–795 through 2681–801.

2. Amend § 41.24 by revising paragraph (a) and adding paragraph (c) to read as follows:

§ 41.24 International organization aliens.

(a) *Definition of international organization.* ''International organization'' means:

(1) Any public international organization which has been designated by the President by Executive Order as entitled to enjoy the privileges, exemptions, and immunities provided for in the International Organizations Immunities Act (59 Stat. 669, 22 U.S.C. 288); and

(2) For the purpose of special immigrant status under INA 101(a)(27)(I), INTELSAT or any successor or separated entity thereof.

* * * * *

(c) *Officers and employees of privatized INTELSAT, their family members and domestic servants.* (1) Officers and employees of privatized INTELSAT who both were employed by INTELSAT, and held status under INA 101(a)(15)(G)(iv) for at least six months prior to privatization on July 17,2001, will continue to be so classifiable for so long as they are officers or employees of INTELSAT or a successor or separated entity thereof.

(2) Aliens who had had G–4 status as officers and employees of INTELSAT but became officers or employees of a successor or separated entity of INTELSAT after at least six months of such employment, but prior to and in anticipation of privatization and subsequent to March 17, 2000, will also continue to be classifiable under INA 101(a)(15)(G)(iv) for so long as that employment continues.

(3) Family members of officers and employees described in paragraphs (c)(1) and (2) of this section who qualify as ''immediate family'' under § 41.21(a)(3) and who are accompanying or following to join the principal are also classifiable under INA 1010(a)(15)(G)(iv) for so long as the principal is so classified.

(4) Attendants, servants, and personal employees of officers and employees described in paragraphs (c)(1) and (2) of this section are not eligible for classification under INA 101(a)(15)(G)(v), given that the officers and employees described in paragraphs (c)(1) and (2) of this section are not officers or employees of an ''international organization'' for purposes of INA 101(a)(15)(G).

Dated: March 9, 2002.

Mary A. Ryan,

Assistant Secretary for Consular Affairs, Department of State.

[FR Doc. 02–8549 Filed 4–16–02; 8:45 am]

BILLING CODE 4710–06–P

DEPARTMENT OF LABOR

Mine Safety and Health Administration

30 CFR Part 75

RIN 1219–AA75

High-Voltage Longwall Equipment Standards for Underground Coal Mines; Correction

AGENCY: Mine Safety and Health Administration (MSHA), Labor.

ACTION: Final rule; correction.

SUMMARY: This corrects the Mine Safety and Health Administration's final rule establishing new mandatory standards for the design, installation, use, and maintenance of high-voltage longwall mining systems used in underground coal mines published March 11, 2002.

DATES: Effective on May 10, 2002.

FOR FURTHER INFORMATION CONTACT: Marvin W. Nichols, Jr., Director, Office of Standards, Regulations and Variances, MSHA, 4015 Wilson Boulevard, Arlington, Virginia 22203–1984. Mr. Nichols can be reached at *nichols-marvin@msha.gov* (Internet E-mail), 703–235–1910 (voice), or 703–235–5551 (fax). The Correction also is available on the Internet at *http://www.msha.gov/REGSINFO.HTM*.

SUPPLEMENTARY INFORMATION: On March 11, 2002, the Mine Safety and Health Administration published a final rule (67 FR 10972) revising our electrical safety standards for underground coal mines. This document corrects the final rule by adding the heading for Appendix A to Subpart I and corrects the placement of the appendix.

Dated: April 12, 2002.

Marvin W. Nichols, Jr.,

Director, Office of Standards, Regulations and Variances.

In the **Federal Register** of March 11, 2002, the illustration that appears on page 11005 should be corrected to read as set forth below and moved to appear immediately after § 75.822 on page 11003.

BILLING CODE 4510–43–P

Appendix A to Subpart I - Diagrams of Inby and Outby Switching

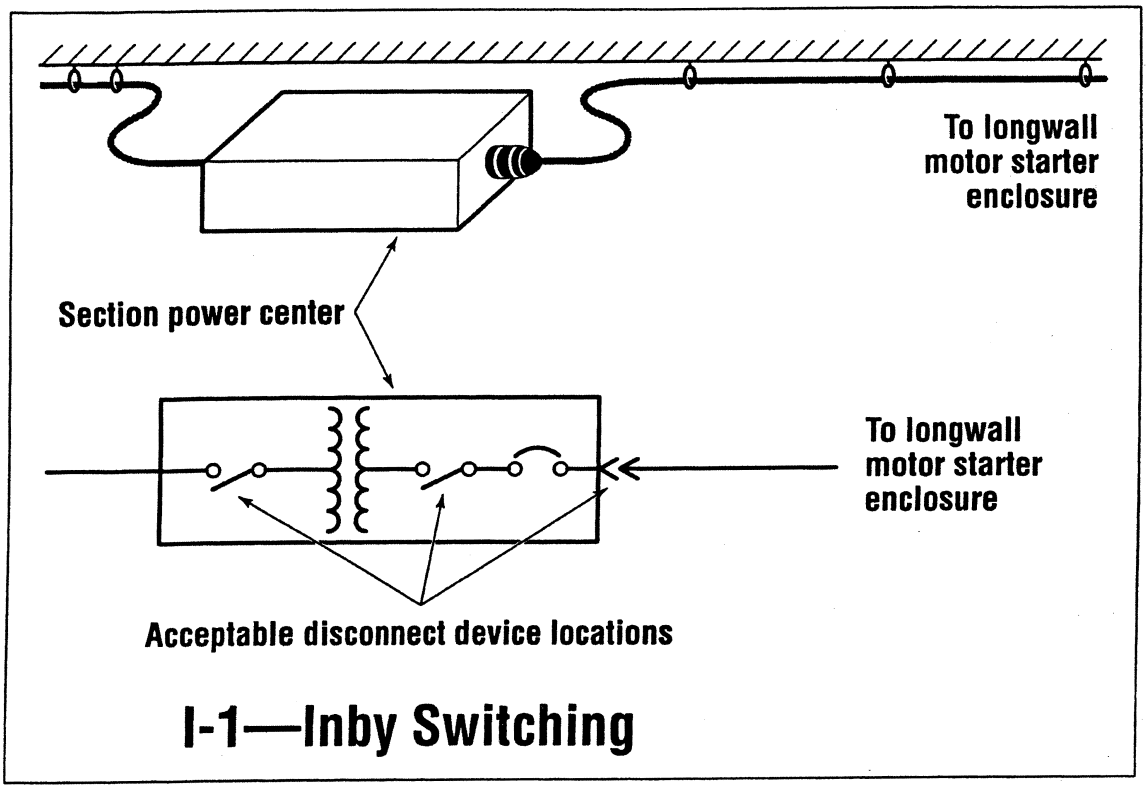

I-1—Inby Switching

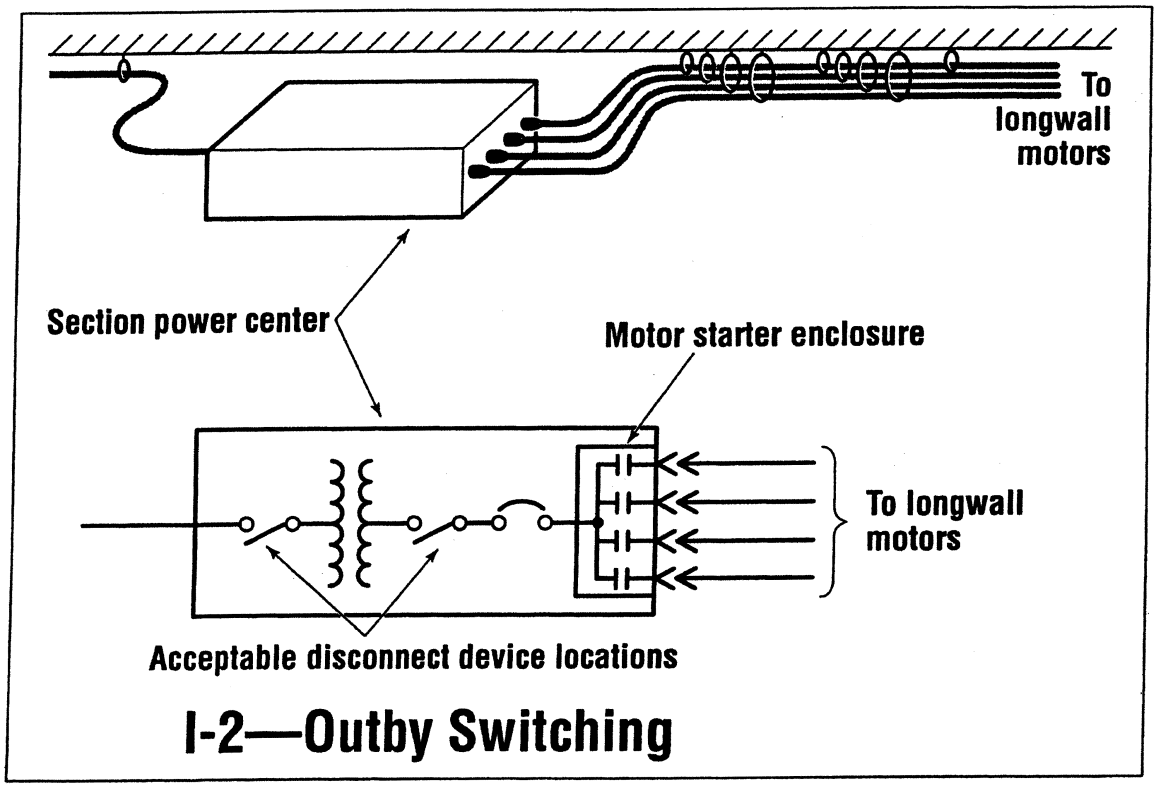

I-2—Outby Switching

[FR Doc. 02–9298 Filed 4–16–02; 8:45 am]
BILLING CODE 4510–43–C

DEPARTMENT OF DEFENSE

Office of the Secretary

32 CFR Part 199

RIN–0720–AA70

Civilian Health and Medical Program of the Uniformed Service (CHAMPUS): Enuretic Devices, Breast Reconstructive Surgery, PFPWD Valid Authorization Period, Early Intervention Services

AGENCY: Office of the Secretary, DoD.

ACTION: Final rule.

SUMMARY: This final rule removes the exclusion of enuresis alarms, corrects contradictory language as it relates to breast reconstructive surgery, changes the valid period of an authorization for services and items under the Program for Persons with Disabilities, implements Section 640 of Public Law 105–17, which establishes the Civilian Health and Medical Program of the Uniformed Service (CHAMPUS) payment relationship for IDEA Part C services and items.

EFFECTIVE DATE: This final rule is effective May 17, 2002.

FOR FURTHER INFORMATION CONTACT: Margaret Brown and Michael Kottyan, TRICARE Management Activity, Office of Medical Benefits and Reimbursement Systems (303) 676–3581 and (303) 676–3520 respectively.

SUPPLEMENTARY INFORMATION: On November 15, 2000 (65 FR 68957), the Department of Defense published a proposed rule with a public comment period. All respondents concurred with the proposed amendments. Five suggested several minor changes. Therefore, all comments were analyzed and considered in the formulation of this final rule.

Comments and Responses

Comment: PFPWD—Early Intervention: One comment stated that it was not clear from the materials provided whether CHAMPUS as first payer for allowable medical services and items provided as early intervention services (EIS) is a change to comply with the law or whether it is a clarification of present policy.

Response: This action is not a change in that it merely codifies Section 640 of Public Law 105–17, which defines the payment relationship of CHAMPUS and funds provided in accordance with that law.

Comment: Another comment suggested that the rule stipulate that families who reside on base are not eligible for TRICARE/CHAMPUS payment if the on-base program can provide the required EIS.

Response: Early Intervention Services (EIS) available from or through Military Treatment Facilities (MTFs), or other on-base programs, should be utilized to the extent appropriate. However, to restrict services to those not available from or through an MTF would require a mechanism similar to a non-availability statement, could precipitate a delay in delivery of necessary services, and is beyond the scope of this rule. Consequently, we have retained the language as originally proposed.

Comment: PFPWD Double Coverage Plan—Another comment suggested that we change the sentence ''medical services and items that are provided under Part C of the IDEA'' to ''services and devices provided under Part C of the IDEA that are medically or psychologically necessary.''

Response: We agreed to make this change. However, we did not change the term ''items'' to ''devices'' because items is the language used elsewhere in CHAMPUS' regulations and policies.

Comment: PFPWD Valid Authorization Period—The last comment regarding PFPWD and suggested that we change the sentence ''maximum of twelve months'' to ''maximum of twelve consecutive months.''

Response: We agreed to make this change.

Comment: Breast reconstructive surgery—One comment suggested that we change ''structures of the body in order to improve the patient's appearance and self-esteem remains an exclusion'' to ''structures of the body for the sole purpose of electively improving the patient's appearance remains an exclusion'' to clarify the intent of when reconstructive surgery is not paid.

Response: We agreed to make this change.

Comment: Statement at the paragraph 199.4(g)(15)(i)(D)—It was also suggested that we define the term ''reliable evidence'' by making a reference to the definition of reliable evidence in 32 CFR 199.2.

Response: This change is not necessary, because paragraph 199.4(g)(15)(i)(D) already contains a reference to the definition at the end of the paragraph.

Comment: Enuretic Devices—The last comment regarding enuretic devices suggested that we change the word ''physician'' to ''health care provider'' to expand the personnel available to provide professional guidance on the use of the enuretic devices, such as a physician's assistant or nurse practitioner.

Response: We agreed to make this change.

Overview of Changes

The following provides an overview of the changes in this final rule to §§ 199.2; 199.4; 199.5; and 199.8.

This final rule removes the exclusion of enuresis alarms, corrects contradictory language as it relates to breast reconstructive surgery, changes the valid period of an authorization for services and items under the Program for Persons with Disabilities (PFPWD), and establishes the CHAMPUS payment relationship for IDEA Part C services and items, and revises a statement to the paragraph at 32 CFR 199.4(g)(15)(i)(D).

Enuretic Devices

The TRICARE Management Activity received a request from the medical community that we re-evaluate our policy regarding enuretic devices, which currently are excluded from cost sharing under the CHAMPUS Basic Program. Recent literature review indicates that the medical community considers enuresis alarms the most effective method for treating enuresis. Having found no contradictory evidence, we agree that enuretic devices should be removed from the exclusions in the regulation. The removal of this exclusion allows physicians to select rational treatment options and insure that CHAMPUS pays only for the most appropriate and highest quality medical care possible.

Enuretic conditioning programs are also specifically excluded from CHAMPUS cost sharing. Enuretic conditioning programs will continue to be excluded. The basis for excluding enuretic conditioning programs is to restrict the payment for professional guidance on the use of these devices to an authorized health care provider, such as, the attending physician or a physician's assistant or a nurse practitioner.

Breast Reconstructive Surgery.

Benefits under the basic program are not available for cosmetic, reconstructive, or plastic surgery. However, the regulation provides exceptions for procedures that are essentially cosmetic when performed in response to a congenital anomaly, post mastectomy breast reconstruction for malignancy, fibrocystic disease, or other covered mastectomies, an accidental injury or disfiguring scars resulting from neoplastic surgery.

The regulation currently contains contradictory provisions relating to post mastectomy breast reconstruction. Paragraph 199.4 (e)(8)(i)(D) specifically authorizes post mastectomy breast reconstruction. However, paragraph 199.4 (e)(8)(ii)(D) excludes breast augmentation mammoplasty even when performed as a part of post mastectomy breast reconstruction procedure. Because an augmentation mammoplasty is an integral part of most post mastectomy breast reconstruction procedures, it is inconsistent to exclude it as a part of that procedure.

Further, in the context of post mastectomy breast reconstruction, reduction mammoplasty may be performed to achieve symmetry of the collateral breast. This too is an integral part of the post mastectomy breast reconstruction process and should not be excluded from cost sharing by CHAMPUS. We are adding language to clarify the rule that reduction mammoplasty on the collateral breast is an authorized part of the post mastectomy breast reconstruction procedure.

Cosmetic, reconstructive or plastic surgery that is performed to reshape normal structures of the body for the sole purpose of electively improving the patient's appearance remains an exclusion.

PFPWD Valid Authorization Period

The regulation currently provides that a valid authorization for receipt of services and items under the Program for Persons with Disabilities (PFPWD) shall not exceed six consecutive months. For services that are required for more than six months, and for the allowable cost of durable equipment and durable medical equipment that is prorated for more than six months, this requirement places unnecessary hardship on the family of an individual with a disability and additional administrative workload on the managed care support contractors. Changing the valid period of a PFPWD authorization to a maximum of twelve consecutive months enhances the PFPWD without compromising its accountability.

Early Intervention Services

Part C of the Individuals with Disabilities Education Act (IDEA) Amendments of 1997, Public Law 105–17, enacted June 4, 1997, provides financial assistance to States to, among other provisions, facilitate the coordination of payment for early intervention services from Federal, State, local, and private sources (including public and private insurance coverage). Early intervention services are developmental services provided to individuals under age three (3) who have a developmental delay or who would be at risk of experiencing a substantial developmental delay if those services were not provided.

Part C, Section 640, Payer of Last Resort, establishes that funds provided under the Act may not be used to satisfy a financial commitment for services that would have been paid for from another public or private source, including any medical program administered by the Secretary of Defense. This language establishes CHAMPUS as first payer for medical services and items provided as early intervention services in accordance with Part C and that are otherwise allowable under the CHAMPUS Basic Program or the Program for Persons with Disabilities.

Statement at Paragraph 32 CFR 199.4(g)(15)(i)(D)

The revised statement clarifies that the consensus among experts must be based on reliable evidence.

Regulatory Procedures

Executive Order 12866 requires certain regulatory assessments for any significant regulatory action, defined as one that would result in an annual effect on the economy of $100 million, or more or have other substantial impacts.

The Regulatory Flexibility Act (RFA) requires that each Federal Agency prepare, and make available for public comment, a regulatory flexibility analysis when the agency issues a regulation which would have a significant impact on a substantial number of small entities.

This rule has been designated as significant and has been reviewed by the Office Management and Budget as required under the provisions of Executive Order 12866.

The changes set forth in this final rule are minor revisions to the existing regulation. This final rule will not impose additional information collection requirements on the public under the Paperwork Reduction Act of 1995 (44 U.S.C. 3501–3511).

List of Subject in 32 CFR Part 199

Claims, Health insurance, Individuals with disabilities, Military personnel.

Accordingly, 32 CFR part 199 is amended as follows:

PART 199 —[AMENDED]

1. The authority citation for part 199 continues to read as follows:

Authority: 5 U.S.C. 301; 10 U.S.C. Chapter 55.

2. Section 199.2 is amended in the definition of ''Double coverage plan'', by removing ''or'' at the end of paragraph (iii), removing the period at the end of paragraph (iv) and adding ''; or'' in its place, and adding paragraph (v) to read as follows:

§ 199.2 Definitions.

* * * * *

Double coverage plan. * * *

(v) Part C of the Individuals with Disabilities Education Act for services and items provided in accordance with Part C of the IDEA that are medically or psychologically necessary in accordance with the Individualized Family Service Plan and that are otherwise allowable under the CHAMPUS Basic Program or the Program for Persons with Disabilities.

* * * * *

3. Section 199.4 is amended by removing paragraph (e)(8)(ii)(D), and by revising paragraphs (e)(8)(iv)(C), (e)(8)(iv)(E), (g)(15)(i)(D), and (g)(58), to read as follows:

§ 199.4 Basic program benefits.

* * * * *

(e) * * *

(8) * * *

(iv) * * *

(C) *Augmentation mammoplasties.* Augmentation mammoplasties, except for breast reconstruction following a covered mastectomy and those specifically authorized in paragraph (e)(8)(i) of this section.

* * * * *

(E) *Reduction mammoplasties.* Reduction mammoplasties (unless there is medical documentation of intractable pain, not amenable to other forms of treatment, resulting from large, pendulous breasts or unless performed as an integral part of an authorized breast reconstruction procedure under paragraph (e)(8)(i) of this section, including reduction of the collateral breast for purposes of ensuring breast symmetry)

* * * * *

(g) * * *

(15) * * *

(i) * * *

(D) If reliable evidence shows that the consensus among experts regarding the medical treatment or procedure is that further studies or clinical trials are necessary to determine its maximum tolerated doses, its toxicity, its safety, or its effectiveness as compared with the standard means of treatment or diagnosis (see the definition of reliable evidence in § 199.2 for the procedures used in determining if a medical treatment or procedure is unproven).

* * * * *

(g) * * *

(58) *Enuretic.* Enuretic conditioning programs, but enuretic alarms may be cost-shared when determined to be medically necessary in the treatment of enuresis.

* * * * *

4. Section 199.5 is amended by revising paragraph (a)(4)(iii) and adding paragraph (a)(5)(v) to read as follows:

§ 199.5 Program for Persons with Disabilities (PFPWD).

(a) * * *

(4) * * *

(iii) *Valid period.* An authorization for a PFPWD service or item shall not exceed twelve consecutive months.

* * * * *

(5) * * *

(v) The requirements of this paragraph (a)(5) notwithstanding, no Public Facility Use Certification is required for medical services and items that are provided under Part C of the Individuals with Disabilities Education Act in accordance with the Individualized Family Service Plan and that are otherwise allowable under the CHAMPUS Basic Program or the PFPWD.

* * * * *

5. Section 199.8 is amended by adding paragraph (d)(5) to read as follows:

§ 199.8. Double coverage.

* * * * *

(d) * * *

(5) The requirements of paragraph (d)(4) of this section notwithstanding, CHAMPUS is primary payer for services and items that are provided under Part C of the IDEA that are medically or psychologically necessary in accordance with the Individualized Family Service Plan and that are otherwise allowable under the CHAMPUS Basic Program or the Program for Persons with Disabilities.

* * * * *

Dated: April 10, 2002.

L.M. Bynum,

Alternate OSD Federal Register Liaison Officer, Department of Defense.

[FR Doc. 02–9180 Filed 4–16–02; 8:45 am]

BILLING CODE 5001–08–P

FEDERAL COMMUNICATIONS COMMISSION

47 CFR Parts 0, 1, and 63

[CC Docket No. 01–150; FCC 02–78]

Implementation of Further Streamlining Measures for Domestic Section 214 Authorizations

AGENCY: Federal Communications Commission.

ACTION: Final rule.

SUMMARY: This document adopts rules to govern and streamline review of applications for section 214 of the Communications Act of 1934, as amended (the Act), to transfer control of domestic transmission lines. Specifically, this document establishes a thirty day streamlined review process that will presumptively apply to domestic section 214 transfer applications meeting specified criteria, and that will apply on a case-by-case basis to all other domestic section 214 applications. This document also sets forth the information that applicants must provide in their domestic section 214 applications, whether filed separately or in combination with an international section 214 applications. Moreover, this document defines pro forma transactions in a manner that is consistent with the definition used by the Commission in other contexts, and harmonizes the treatment of asset acquisitions with the treatment of acquisitions of corporate control.

DATES: Effective May 17, 2002, except §§ 63.01, 63.03 and 63.04 which contain information collection requirements that have not been approved by the Office of Management and Budget (OMB). The Federal Communications Commission will publish a document in the **Federal Register** announcing the effective date of these rules.

FOR FURTHER INFORMATION CONTACT: Aaron Goldberger, Attorney-Advisor, Policy and Program Planning Division, Common Carrier Bureau, at (202) 418–1580, or via the Internet at *agoldber@fcc.gov.*

SUPPLEMENTARY INFORMATION: This is a summary of the Commission's Report and Order in CC Docket No. 01–150, FCC 02–78, adopted March 14, 2002, and released March 21, 2002. The complete text of this Report and Order is available for inspection and copying during normal business hours in the FCC Reference Information Center, Portals II, 445 12th Street, SW, Room CY–A257, Washington, DC, 20554. This document may also be purchased from the Commission's duplicating contractor, Qualex International, Portals II, 445 12th Street, SW, Room CY–B402, Washington, DC 20554, telephone 202–863–2893, facsimile 202–863–2898, or via e-mail *qualexint@aol.com.* It is also available on the Commission's website at *http://www.fcc.gov.*

Synopsis of the Report and Order

1. The Commission's goals in adopting this Report and Order are: (1) To add predictability, efficiency, and transparency to the Commission's domestic section 214 transfer of control review process; and (2) greatly improve the Commission's current domestic section 214 transfer of control procedures, which carriers have sometimes found confusing, cumbersome, and overly burdensome to navigate.

2. *Background.* Under section 214 of the Communications Act of 1934, as amended (Act), carriers must obtain a certificate of public convenience and necessity from the Commission before constructing, acquiring, operating or engaging in transmission over lines of communication, or before discontinuing, reducing or impairing service to a community. In considering such applications, the Commission has employed a public interest standard under section 214(a) that involves an examination of the potential public interest harms and benefits of a proposed transaction.

3. In 1999, the Commission adopted the current version of § 63.01 of the Commission's rule, granting all carriers blanket authority under section 214 to provide domestic interstate services and to construct, acquire, or operate any domestic transmission line. The blanket authority in § 63.01, however, does not extend to the transfer of lines resulting from an acquisition of corporate control. Accordingly, with respect to acquisitions of corporate control, the Commission decided that carriers must file a section 214 application with the Commission and obtain Commission approval prior to consummating a proposed transaction.

4. In the Notice of Proposed Rulemaking adopted in this proceeding on July 12, 2001 (66 FR 41823 (2001)), the Commission tentatively concluded that a substantial number of transactions do not raise public interest concerns and should be granted on a streamlined basis. Therefore, the Commission sought comment on ways to streamline its review process for these transactions. Following from the Notice of Proposed Rulemaking, this Report and Order takes several significant steps to lessen the burden on carriers seeking authorization to acquire domestic transmission lines.

5. *Discussion.* First, the Commission establishes a thirty day streamlined review process in which certain applications are automatically granted thirty days after public notice announcing the transaction unless a carrier is otherwise notified by the Commission. The Streamlining Rule lists categories of applications that would be presumptively accorded streamlined treatment, such as those involving only non-facilities-based carriers; certain types of incumbent local exchange carrier (LEC) transactions; combinations of interexchange carriers with low combined market shares; and proposed transactions where one party provides no domestic telecommunications services. Streamlined processing of applications not falling within a presumptive category will be determined on a case-by-case basis.

6. Second, the Commission adopts rules to provide guidance concerning the information that carriers should provide in domestic section 214 applications. The Commission also eases filing burdens by adopting rules that enable carriers to file a single document with the Commission that combines both domestic and international section 214 applications.

7. Third, the Commission eliminates application filing requirements for all pro forma transactions, requiring simple post-transaction notifications to the Commission only for certain transfers in bankruptcy proceedings. The Commission also defines pro forma transactions in the domestic section 214 context in a manner that is consistent with how the Commission defines pro forma transactions involving other types of Commission authorization.

8. Fourth, the Commission modifies its filing requirements with regard to asset acquisitions, by requiring that they now be treated as transfers of control.

9. Finally, the Report and Order removes sections of the Commission's rules that the Commission has determined to be obsolete.

Final Paperwork Reduction Act Analysis

10. The action contained herein has been analyzed with respect to the Paperwork Reduction Act of 1995 and found to impose new or modified reporting and recordkeeping requirements or burdens on the public. Implementation of these new or modified reporting and recordkeeping requirements will be subject to approval by the Office of Management and Budget (OMB) as prescribed by the Act. The new paperwork requirement contained in the Report and Order will go into effect in the **Federal Register** upon OMB approval.

Final Regulatory Flexibility Analysis

11. As required by the Regulatory Flexibility Act, as amended, (RFA), an Initial Regulatory Flexibility Analysis (IRFA) was incorporated in the *Declaratory Ruling and Notice of Proposed Rulemaking in CC Docket No. 01–150* (NPRM). The Commission sought written public comment on the proposals in the *NPRM,* including comment on the IRFA. The Commission received seven comments and four reply comments in this proceeding. No comments received addressed the IRFA. This present Final Regulatory Flexibility Analysis (FRFA) conforms to the RFA.

Need for, and Objectives of, the Report and Order

12. The Commission initiated the *NPRM* to seek comment on how it might improve and streamline applications under section 214 to acquire domestic transmission lines through acquisitions of corporate control that require little scrutiny in order for the Commission to determine that they serve the public interest. In particular, the Commission sought comment on: (1) Whether the Commission should shorten the review period for a predetermined class of domestic section 214 applications; (2) what criteria to employ to determine eligibility for streamlined review; (3) how to treat a streamlined domestic section 214 application that is accompanied by a request for waiver of Commission rules; (4) whether the Commission should have discretion to remove an application from streamlined processing; (5) how the Common Carrier Bureau should treat a streamlined application when the applicants file related applications in other bureaus; and (6) whether the Commission should, as an alternative to streamlining, relieve all non-dominant carriers, or certain categories of non-dominant carriers, that have blanket domestic section 214 authority from filing transfer of control applications.

13. In this Order, the Commission adopts rules to govern and streamline review of domestic section 214 transfer of control applications. By adopting these rules, the Commission intends to reduce the burden on carriers of complying with the Commission's review requirements and, at the same time, increase the predictability and transparency of these requirements.

14. First, under the new streamlined procedures, for example, transactions involving small entities such as incumbent LECs, are presumed to be of the kind not likely to raise public interest concerns and would receive automatic approval after a 30 day review period unless otherwise notified by the Commission. This streamlined approach reduces the amount of business and legal resources an applicant may need to expend to manage an application through the Commission review process because applicants can now predict the level of scrutiny an application is likely to receive. The streamlined approach also offers small entities the benefit of business certainty by designating a date certain on which transactions would be permitted to close.

Summary of Significant Issues Raised by Public Comments in Response to the IRFA

15. No party specifically commented in response to the Regulatory Flexibility Act. However, commenters proposed many of the streamlined measures the Commission enacted. For example, in this Order, the Commission adopts commenters' proposals to presumptively streamline transfer applications involving domestic, interstate carriers that are non-dominant in the provision of any service where their combined post-transaction market presence is unlikely to raise public interest concerns. If a transaction proposes to combine the interexchange services of two non-dominant carriers, the application will be presumptively streamlined if the transferee's market share in the interstate, interexchange market following the transaction would be less than 10 percent. Similarly, if a transaction proposes to combine the telephone exchange services and/or exchange access services of two non-dominant carriers, the application will be presumptively streamlined if their services are offered exclusively in geographic areas served by a dominant local exchange carrier. These adopted streamlining measures proposed by commenters, while not directly responsive to the RFA, will nevertheless benefit both small and large carriers.

Description and Estimate of the Number of Small Entities to Which Rules Will Apply

16. The RFA directs agencies to provide a description of, and where feasible, an estimate of the number of small entities that may be affected by the rules adopted herein. The RFA defines the term ''small entity'' as having the same meaning as the terms ''small business,'' ''small organization,'' and ''small governmental jurisdiction.'' The term ''small business'' has the same meaning as the term ''small business concern'' under the Small Business Act,

unless the Commission has developed one or more definitions that are appropriate for its activities. Under the Small Business Act, a ''small business concern'' is one which: (1) Is independently owned and operated; (2) is not dominant in its field of operation; and (3) satisfies any additional criteria established by the SBA.

17. The most reliable source of information regarding the total numbers of certain common carrier and related providers nationwide appears to be data the Commission publishes annually in its *Telecommunications Provider Locator* report, derived from filings made in connection with the Telecommunications Relay Service (TRS). According to data in the most recent report, there are 5,679 interstate service providers. These providers include, *inter alia,* local exchange carriers, wireline carriers and service providers, interexchange carriers, competitive access providers, operator service providers, pay telephone operators, providers of telephone service, providers of telephone exchange service, and resellers.

18. The Commission has included small incumbent local exchange carriers (LECs) in this present RFA analysis. As noted above, a ''small business'' under the RFA is one that, *inter alia,* meets the pertinent small business size standard (*e.g.,* a telephone communications business having 1,500 or fewer employees), and ''is not dominant in its field of operation.'' The SBA's Office of Advocacy contends that, for RFA purposes, small incumbent LECs are not dominant in their field of operation because any such dominance is not ''national'' in scope. The Commission has therefore included small incumbent LECs in this RFA analysis, although the Commission emphasizes that this RFA action has no effect on FCC analyses and determinations in other, non-RFA contexts.

19. *Total Number of Telephone Companies Affected.* The U.S. Bureau of Census (Census Bureau) reports that, at the end of 1992, there were 3,497 firms engaged in providing telephone services, as defined therein, for at least one year. This number contains a variety of different categories of carriers, including LECs, interexchange carriers, competitive access providers, operator service providers, pay telephone operators, and resellers. It seems certain that some of these 3,497 telephone service firms may not qualify as small entities or small incumbent LECs because they are not ''independently owned and operated.'' It seems reasonable to conclude that fewer than 3,497 telephone service firms are small entity telephone service firms or small incumbent LECs that may be affected by these rules.

20. *Wireline Carriers and Service Providers.* The SBA has developed a definition of small entities for telephone communications companies other than radiotelephone (wireless) companies. The Census Bureau reports that there were 2,321 such telephone companies in operation for at least one year at the end of 1992. According to the SBA's definition, a small business telephone company other than a radiotelephone (wireless) company is one employing no more than 1,500 persons. All but 26 of the 2,321 non-radiotelephone (wireless) companies listed by the Census Bureau were reported to have fewer than 1,000 employees. Even if all 26 of the remaining companies had more than 1,500 employees, there would still be 2,295 non-radiotelephone (wireless) companies that might qualify as small entities or small incumbent LECs. Although it seems certain that some of these carriers are not independently owned and operated, the Commission is unable at this time to estimate with greater precision the number of wireline carriers and service providers that would qualify as small business concerns under SBA's definition. Therefore, the Commission estimates that fewer than 2,295 small telephone communications companies other than radiotelephone (wireless) companies are small entities or small incumbent LECs that may be affected by these rules.

21. *Local Exchange Carriers, Competitive Access Providers, Interexchange Carriers, Operator Service Providers, Payphone Providers, and Resellers.* Neither the Commission nor the SBA has developed a definition for small LECs, competitive access providers (CAPS), interexchange carriers (IXCs), operator service providers (OSPs), payphone providers, or resellers. The closest applicable definition for these carrier-types under SBA rules is for telephone communications companies other than radiotelephone (wireless) companies. The most reliable source of information that the Commission knows regarding the number of these carriers nationwide appears to be the data that the Commission collects annually in connection with the TRS. According to our most recent data, there are 1,329 LECs, 532 CAPs, 229 IXCs, 22 OSPs, 936 payphone providers, and 710 resellers. Although it seems certain that some of these carriers are not independently owned and operated, or have more than 1,500 employees, the Commission is unable at this time to estimate with greater precision the number of these carriers that would qualify as small business concerns under the SBA's definition. Therefore, the Commission estimates that there are fewer than 1,329 small entity LECs or small incumbent LECs, 532 CAPs, 229 IXCs, 22 OSPs, 936 payphone providers, and 710 resellers that may be affected by these rules.

22. *Wireless Telephony and Paging and Messaging.* Wireless telephony includes cellular, personal communications services (PCS) or specialized mobile radio (SMR) service providers. Neither the Commission nor the SBA has developed a definition of small entities applicable to cellular licensees, or to providers of paging and messaging services. The closest applicable SBA definition is a telephone communications company other than radiotelephone (wireless) companies. According to the most recent Provider Locator data, 858 carriers reported that they were engaged in the provision of wireless telephony and 576 companies reported that they were engaged in the provision of paging and messaging service. The Commission does not have data specifying the number of these carriers that are not independently owned or operated, and thus are unable at this time to estimate with greater precision the number that would qualify as small business concerns under the SBA's definition. Consequently, the Commission estimates that there are fewer than 858 small carriers providing wireless telephony services and fewer than 576 small companies providing paging and messaging services that may be affected by these rules.

Description of Projected Reporting, Recordkeeping, and Other Compliance Requirements

23. The streamlining requirements discussed herein will not require additional reporting, recordkeeping or compliance requirements for service providers. In this Order, the Commission is not mandating new recordkeeping and compliance requirements. Rather, the Commission is articulating more clearly the categories of information that must be contained in a domestic section 214 application for transfer of control in order for the Commission to grant streamlined review. While there has been some uncertainty concerning the appropriate content of a section 214 application, the Commission believes that these new requirements will lessen the regulatory burden on small carriers.

Steps Taken To Minimize Significant Economic Impact on Small Entities, and Significant Alternatives Considered

24. The RFA requires an agency to describe any significant alternatives that it has considered in reaching its proposed approach, which may include the following four alternatives (among others): (1) The establishment of differing compliance or reporting requirements or timetables that take into account the resources available to small entities; (2) the clarification, consolidation, or simplification of compliance or reporting requirements under the rule for small entities; (3) the use of performance, rather than design, standards; and (4) an exemption from coverage of the rule, or any part thereof, for small entities.

25. The Commission concludes that measures adopted and described in this Order would reduce regulatory burdens for small carriers including resellers and small incumbent LECs. For example, in this Order, the Commission eases filing burdens by adopting rules that enable carriers to file a single document with the Commission that combines both domestic and international section 214 applications. Aside from cases involving bankruptcy, where a simple notice will be required, the Commission eliminates filing requirements for *pro forma* transactions. The same categories of *pro forma* transactions that apply in other bureaus will apply to domestic carriers, thus improving consistency of filing requirements across bureaus for small and large entities alike. Carriers have sometimes found the filing rules confusing, cumbersome, and overly burdensome to navigate because the rules did not state what information the Commission required. In this Order, the Commission clarifies what a carrier must submit to be eligible for streamlined treatment. Overall, the steps the Commission takes in this item will add predictability, efficiency, and transparency to its review process, and will vastly improve our current transfer of control procedures. While these streamlining measures apply similarly to both small and large entities, the Commission expects that small entities are more likely to benefit to the extent such firms have fewer or reduced resources available, as compared to large firms.

26. In this Order, the Commission also describes commenters' alternative streamlining proposals and state why those proposals would not improve efficiency or predictability, or would not serve the public interest. For example, CenturyTel proposed that ''after the fact'' notice for corporate transfers of control by small and medium-sized carriers would serve the public interest. However, the Commission must fulfill its statutorily imposed duty to determine whether the transaction serves the public interest, notwithstanding the legitimate desire of applicants to obtain the most expedited review possible. Therefore, the Commission concludes that applicants shall continue current practice and provide the Commission prior notice of proposed transfers of control to permit a short period for comment and review, even in the context of streamlined processing of domestic section 214 applications. Moreover, the Commission gains assurance from knowing that the rule would continue to benefit small carriers and serve the public interest by providing applicants with a date certain for domestic transfers of control, after which every transaction may close, unless the Commission otherwise notifies the applicant.

27. *Report to Congress.* The Commission will send a copy of this Order, including this FRFA, in a report to be sent to Congress pursuant to the Congressional Review Act. In addition, the Commission will send a copy of this Order, including this FRFA, to the Chief Counsel for Advocacy of the SBA. A copy of this Order and FRFA (or summaries thereof) will also be published in the **Federal Register**.

Ordering Clauses

28. *It is ordered,* pursuant to the authority contained in sections 2, 4(i)–(j), 201, 214, and 303(r) of the Communications Act of 1934, as amended, 47 U.S.C. 152, 154(i)–(j), 201, 214, and 303(r), that the *Report and Order* in CC Docket No. 01–150 is adopted and parts 0, 1, and 63 of the Commission's rules, 47 CFR parts 0, 1, and 63, are amended as set forth.

29. *It is further ordered* that the policies, rules, and requirements adopted herein are adopted and shall become effective upon approval by OMB. The Commission will publish a document in the **Federal Register** announcing the effective date.

30. *It is further ordered* that the Commission's Consumer Information Bureau, Reference Information Center, shall send a copy of this *Report and Order* in CC Docket No. 01–150, including the Final Regulatory Flexibility Analysis, to the Chief Counsel for Advocacy of the Small Business Administration.

List of Subjects

47 CFR Part 0

Reporting and recordkeeping requirements.

47 CFR Part 1

Communications common carriers, Reporting and recordkeeping requirements, Telecommunications.

47 CFR Part 63

Communications common carriers, Reporting and recordkeeping requirements, Telephone.

Federal Communications Commission.

William F. Caton,

Acting Secretary.

Rule Changes

For the reasons discussed in the preamble, the Federal Communications Commission amends 47 CFR parts 0, 1 and 63 as follows:

PART 0—COMMISSION ORGANIZATION

1. The authority citation for part 0 continues to read:

Authority: Secs. 5, 48 Stat. 1068, as amended; 47 U.S.C. 155.

2. In § 0.291 remove paragraph (c) and redesignate paragraphs (d) through (i) as paragraphs (c) through (h).

PART 1—PRACTICE AND PROCEDURE

3. The authority for part 1 continues to read:

Authority: 47 U.S.C. 151, 154(i), 154(j), 155, 225, 303(r), 309, and 225(e).

§ 1.762 [Removed]

4. Remove § 1.762.

§§ 1.765 and 1.766 [Removed]

5. Remove §§ 1.765 and 1.766.

PART 63—EXTENSION OF LINES, NEW LINES, AND DISCONTINUANCE, REDUCTION, OUTAGE AND IMPAIRMENT OF SERVICE BY COMMON CARRIERS; AND GRANTS OF RECOGNIZED PRIVATE OPERATING AGENCY STATUS

6. The authority citation for part 63 continues to read:

Authority: Sections 1, 4(i), 4(j), 10, 11, 201–205, 214, 218, 403, and 651 of the Communications Act of 1934, as amended, 47 U.S.C. 151, 154(i), 154(j), 160, 201–205, 214, 218, 403, and 571, unless otherwise noted.

7. Section 63.01(a) is revised to read as follows:

§ 63.01 Authority for all domestic common carriers.

(a) Any party that would be a domestic interstate communications common carrier is authorized to provide domestic, interstate services to any domestic point and to construct or operate any domestic transmission line as long as it obtains all necessary authorizations from the Commission for use of radio frequencies.

8. Add § 63.03 to read as follows:

§ 63.03 Streamlining procedures for domestic transfer of control applications.

Any domestic carrier that seeks to transfer control of lines or authorization to operate pursuant to section 214 of the Communications Act of 1934, as amended, shall be subject to the following procedures:

(a) *Public Notice and Review Period.* Upon determination by the Common Carrier Bureau that the applicants have filed a complete application and that the application is appropriate for streamlined treatment, the Common Carrier Bureau will issue a public notice stating that the application has been accepted for filing as a streamlined application. Unless otherwise notified by the Commission, an applicant is permitted to transfer control of the domestic lines or authorization to operate on the 31st day after the date of public notice listing a domestic section 214 transfer of control application as accepted for filing as a streamlined application, but only in accordance with the operations proposed in its application. Comments on streamlined applications may be filed during the first 14 days following public notice, and reply comments may be filed during the first 21 days following public notice, unless the public notice specifies a different pleading cycle. All comments on streamlined applications shall be filed electronically, and shall satisfy such other filing requirements as may be specified in the public notice.

(b) *Presumptive Streamlined Categories.* (1) The streamlined procedures provided in this rule shall be presumed to apply to all transfer of control applications in which:

(i) Both applicants are non-facilities-based carriers;

(ii) The transferee is not a telecommunications provider; or

(iii) The proposed transaction involves only the transfer of the local exchange assets of an incumbent LEC by means other than an acquisition of corporate control.

(2) Where a proposed transaction would result in a transferee having a market share in the interstate, interexchange market of less than 10 percent, and the transferee would provide competitive telephone exchange services or exchange access services (if at all) exclusively in geographic areas served by a dominant local exchange carrier that is not a party to the transaction, the streamlined procedures provided in this rule shall be presumed to apply to transfer of control applications in which:

i. Neither of the applicants is dominant with respect to any service;

ii. The applicants are a dominant carrier and a non-dominant carrier that provides services exclusively outside the geographic area where the dominant carrier is dominant; or

iii. The applicants are incumbent independent local exchange carriers (as defined in § 64.1902 of this chapter) that have, in combination, fewer than two (2) percent of the nation's subscriber lines installed in the aggregate nationwide, and no overlapping or adjacent service areas.

(3) For purposes of (b)(1) and (2) of this paragraph, the terms ''applicant,'' ''carrier,'' ''party,'' and ''transferee'' (and their plural forms) include any affiliates of such entities within the meaning of section 3(1) of the Communications Act of 1934, as amended.

(c) *Removal of Application from Streamlined Processing.* (1) At any time after an application is filed, the Commission, acting through the Chief of the Wireline Competition Bureau, may notify an applicant that its application is being removed from streamlined processing, or will not be subject to streamlined processing. Examples of appropriate circumstances for such action are:

(i) An application is associated with a non-routine request for waiver of the Commission's rules;

(ii) An application would, on its face, violate a Commission rule or the Communications Act;

(iii) An applicant fails to respond promptly to Commission inquiries;

(iv) Timely-filed comments on the application raise public interest concerns that require further Commission review; or

(v) The Commission, acting through the Chief of the Wireline Competition Bureau, otherwise determines that the application requires further analysis to determine whether a proposed transfer of control would serve the public interest.

(2) Notification will be by public notice that states the reason for removal or non-streamlined treatment, and indicates the expected timeframe for Commission action on the application. Except in extraordinary circumstances, final action on the application should be expected no later than 180 days from public notice that the application has been accepted for filing.

(d) Pro Forma Transactions. (1) Any party that would be a domestic common carrier under section 214 of the Communications Act of 1934, as amended, is authorized to undertake any corporate restructuring, reorganization or liquidation of internal business operations that does not result in a change in ultimate ownership or control of the carrier's lines or authorization to operate, including transfers in bankruptcy proceedings to a trustee or to the carrier itself as a debtor-in-possession. [1] Under this rule, a transfer of control of a domestic line or authorization to operate is considered pro forma when, together with all previous internal corporate restructurings, the transaction does not result in a change in the carrier's ultimate ownership or control, or otherwise falls into one of the illustrative categories found in § 63.24 of this part governing transfers of control of international carriers under section 214 of the Communications Act of 1934, as amended.

(2) Any party that would be a domestic common carrier under section 214 of the Communications Act of 1934, as amended, must notify the Commission no later than 30 days after control of the carrier is transferred to a trustee under Chapter 7 of the Bankruptcy Code, a debtor-in-possession under Chapter 11 of the Bankruptcy Code, or any other party pursuant to any applicable chapter of the Bankruptcy Code when that transfer does not result in a change in ultimate ownership or control of the carrier's lines or authorization to operate. The notification can be in the form of a letter (in duplicate to the Secretary). The letter or other form of notification must also contain the information listed in paragraphs (a)(1) through (a)(4) in § 63.04. A single letter may be filed for more than one such transfer of control. If a carrier files a discontinuance request within 30 days of the transfer in bankruptcy, the Commission will treat the discontinuance request as sufficient to fulfill the pro forma post-transaction notice requirement.

(3) Notwithstanding any other provision in this part, any party that would be a domestic common carrier under section 214 of the Communications Act of 1934, as amended, including a carrier that begins

[1] ''Control'' includes actual working control in whatever manner exercised and is not limited to majority stock ownership. ''Control'' also includes direct or indirect ownership or control, such as through intervening subsidiaries. *See* 47 CFR 63.09.

providing service through a differently named subsidiary after an internal corporate restructuring, remains subject to all applicable conditions of service after an internal restructuring, such as rules governing slamming and tariffing.

9. Add § 63.04 to read as follows:

§ 63.04 Filing procedures for domestic transfer of control applications

(a) *Domestic Services Only.* A carrier seeking domestic section 214 authorization for transfer of control should file an application containing:

(1) The name, address and telephone number of each applicant;

(2) The government, state, or territory under the laws of which each corporate or partnership applicant is organized;

(3) The name, title, post office address, and telephone number of the officer or contact point, such as legal counsel, to whom correspondence concerning the application is to be addressed;

(4) The name, address, citizenship and principal business of any person or entity that directly or indirectly owns at least ten (10) percent of the equity of the applicant, and the percentage of equity owned by each of those entities (to the nearest one (1) percent);

(5) Certification pursuant to §§ 1.2001 through 1.2003 of this chapter that no party to the application is subject to a denial of Federal benefits pursuant to section 5301 of the Anti-Drug Abuse Act of 1988. *See* 21 U.S.C. 853.

(6) A description of the transaction;

(7) A description of the geographic areas in which the transferor and transferee (and their affiliates) offer domestic telecommunications services, and what services are provided in each area;

(8) A statement as to how the application fits into one or more of the presumptive streamlined categories in this section or why it is otherwise appropriate for streamlined treatment;

(9) Identification of all other Commission applications related to the same transaction;

(10) A statement of whether the applicants are requesting special consideration because either party to the transaction is facing imminent business failure;

(11) Identification of any separately filed waiver requests being sought in conjunction with the transaction; and

(12) A statement showing how grant of the application will serve the public interest, convenience and necessity, including any additional information that may be necessary to show the effect of the proposed transaction on competition in domestic markets.

(b) *Domestic/International Applications for Transfers of Control.* Where an applicant wishes to file a joint international section 214 transfer of control application and domestic section 214 transfer of control application, the applicant should submit information that satisfies the requirements of § 63.18, which specifies the contents of applications for international authorizations, together with filing fees that satisfy (and are in accordance with filing procedures applicable to) both §§ 1.1105 and 1.1107 of this chapter. In an attachment to the international application, the applicant should submit the information described in paragraphs (a)(6) through (a)(12) of this section.

[FR Doc. 02–9101 Filed 4–16–02; 8:45 am]

BILLING CODE 6712–01–P

FEDERAL COMMUNICATIONS COMMISSION

47 CFR Part 73

[DA 02–786, MM Docket No. 00–124, RM–9893]

Digital Television Broadcast Service; Bryan, TX

AGENCY: Federal Communications Commission.

ACTION: Final rule.

SUMMARY: The Commission, at the request of KWTX/KBTX License Corporation, licensee of station KBTX–TX, Bryan, Texas, substitutes DTV channel 50 for DTV channel 59 at Bryan. *See* 66 FR Rcd 21193 (2001). DTV channel 50 can be allotted to Bryan in compliance with the principle community coverage requirements of Section 73.625(a) at reference coordinates 30–33–16 N. and 96–01–51 W. with a power of 1000, HAAT of 477 meters and with a DTV service population of thousand.

With is action, this proceeding is terminated.

DATES: Effective May 30, 2002.

FOR FURTHER INFORMATION CONTACT: Pam Blumenthal, Media Bureau, (202) 418–1600.

SUPPLEMENTARY INFORMATION: This is a synopsis of the Commission's Report and Order, MM Docket No. 00–124, adopted April 8, 2002, and released April 15, 2002. The full text of this document is available for public inspection and copying during regular business hours in the FCC Reference Information Center, Portals II, 445 12th Street, SW., Room CY–A257, Washington, DC. This document may also be purchased from the Commission's duplicating contractor, Qualex International, Portals II, 445 12th Street., SW, CY–B402, Washington, DC, 20554, telephone 202–863–2893, facsimile 202–863–2898, or via e-mail *qualexint@aol.com.*

List of Subjects in 47 CFR Part 73

Television, Digital television broadcasting.

Part 73 of Title 47 of the Code of Federal Regulations is amended as follows:

PART 73—[AMENDED]

1. The authority citation for Part 73 continues to read as follows:

Authority: 47 U.S.C. 154, 303, 334, 336.

§ 73.622 [Amended]

2. Section 73.622(b), the Table of Digital Television Allotments under Texas, is amended by removing DTV channel 59 and adding DTV channel 50 at Bryan.

Federal Communications Commission.

Barbara A. Kreisman,

Chief, Video Division, Media Bureau.

[FR Doc. 02–9278 Filed 4–16–02; 8:45 am]

BILLING CODE 6712–01–P

FEDERAL COMMUNICATIONS COMMISSION

47 CFR Part 73

[DA 02–785, MM Docket No. 02–3, RM–10349]

Digital Television Broadcast Service; Lakin, KS

AGENCY: Federal Communications Commission.

ACTION: Final rule.

SUMMARY: The Commission, at the request of Smoky Hills Public Television, licensee of noncommercial educational station KSWK–T, NTSC channel *3, Lakin, Kansas, substitutes DTV channel *8 for DTV channel *23 at Lakin. *See* 67 FR 4941, February 1, 2002. DTV channel *8 can be allotted to Lakin, Kansas, in compliance with the principle community coverage requirements of Section 73.625(a) at reference coordinates (37–49–38 N. and 101–06–35 W.) with a power of 100, HAAT of 141 meters and with a DTV service population of 101 thousand. With this action, this proceeding is terminated.

DATES: Effective May 30, 2002.

FOR FURTHER INFORMATION CONTACT: Pam Blumenthal, Media Bureau, (202) 418–1600.

SUPPLEMENTARY INFORMATION: This is a synopsis of the Commission's Report and Order, MM Docket No. 02–3, adopted April 8, 2002, and released April 15, 2002. The full text of this document is available for public inspection and copying during regular business hours in the FCC Reference Information Center, Portals II, 445 12th Street, SW., Room CY–A257, Washington, DC. This document may also be purchased from the Commission's duplicating contractor, Qualex International, Portals II, 445 12th Street, SW., CY–B402, Washington, DC, 20554, telephone 202–863–2893, facsimile 202–863–2898, or via e-mail *qualexint@aol.com.*

List of Subjects in 47 CFR Part 73

Television, Digital television broadcasting.

Part 73 of Title 47 of the Code of Federal Regulations is amended as follows:

PART 73—[AMENDED]

1. The authority citation for Part 73 continues to read as follows:

Authority: 47 U.S.C. 154, 303, 334, 336.

§ 73.622 [Amended]

2. Section 73.622(b), the Table of Digital Television Allotments under Kansas, is amended by removing DTV channel *23 and adding DTV channel *8 at Lakin.

Federal Communications Commission.

Barbara A. Kreisman,

Chief, Video Division, Media Bureau.

[FR Doc. 02–9277 Filed 4–16–02; 8:45 am]

BILLING CODE 6712–01–P

DEPARTMENT OF COMMERCE

National Oceanic and Atmospheric Administration

50 CFR Part 223

[Docket No. 991007270–2042–02; I.D. 090399E]

RIN 0648–AM89

Sea Turtle Conservation; Summer Flounder Trawling Requirements

AGENCY: National Marine Fisheries Service (NMFS), National Oceanic and Atmospheric Administration (NOAA), Commerce.

ACTION: Final rule.

SUMMARY: NMFS adopts as final, without change, an interim final rule that amends the regulations that require summer flounder trawlers to use Turtle Excluder Devices (TEDs) in waters off Virginia and North Carolina to reduce the incidental capture of endangered and threatened sea turtles. NMFS is requiring that any approved hard TED or special TED installed in a summer flounder trawl be installed in a TED extension (a cylinder of webbing in which the TED is installed). NMFS also is providing specifications for the TED extension and requiring that it be constructed of webbing no larger than 3.5–inch (8.9 cm) stretched mesh. The intent of this final rule is to prevent adverse impacts to turtles in the course of summer flounder trawling.

DATES: This final rule is effective May 17, 2002.

ADDRESSES: Requests for a copy of the environmental assessment (EA) prepared for the interim final rule should be addressed to the Chief, Endangered Species Division, Office of Protected Resources, NMFS, 1315 East-West Highway, Silver Spring, MD 20910.

FOR FURTHER INFORMATION CONTACT: David M. Bernhart (ph. 727–570–5312, fax 727–570–5517, e-mail David.Bernhart@noaa.gov).

SUPPLEMENTARY INFORMATION: Through an interim final rule published October 15, 1999 (64 FR 55860), NMFS amended 50 CFR part 223 to require that an approved hard TED or special hard TED installed in a summer flounder trawl be installed in a TED extension. The interim final rule provided specifications for the length and webbing size of the required extension. The rationale for the regulatory amendment was provided in the preamble to the interim final rule and is not repeated here. Comments were requested. No comments were received.

Classification

NMFS prepared an EA for the interim final rule which concluded that the rule would have no significant impact on the human environment. A copy of the EA is available (*see* **ADDRESSES**).

This final rule has been determined to be not significant for purposes of Executive Order 12866.

Because prior notice and comment were not required for the interim final rule or this final rule by U.S.C. 553, or any other law, the analytical requirements of the Regulatory Flexibility Act, 5 U.S.C. 601 *et seq.*, are inapplicable.

This final rule does not contain a collection-of-information requirement for purposes of the Paperwork Reduction Act.

Accordingly, the interim final rule amending 50 CFR part 223 that was published at 64 FR 55860 on October 15, 1999, is adopted as final without change.

Authority: 16 U.S.C. 1531, *et seq.*

Dated: April 10, 2002.

Rebecca Lent,

Deputy Assistant Administrator for Regulatory Programs,National Marine Fisheries Service.

[FR Doc. 02–9353 Filed 4–16–02; 8:45 am]

BILLING CODE 3510–22–S

Proposed Rules

Federal Register
Vol. 67, No. 74
Wednesday, April 17, 2002

This section of the FEDERAL REGISTER contains notices to the public of the proposed issuance of rules and regulations. The purpose of these notices is to give interested persons an opportunity to participate in the rule making prior to the adoption of the final rules.

DEPARTMENT OF HEALTH AND HUMAN SERVICES

Food and Drug Administration

21 CFR Part 184

[Docket No. 99P–5332]

Substances Affirmed as Generally Recognized as Safe: Menhaden Oil; Correction

AGENCY: Food and Drug Administration, HHS.

ACTION: Proposed rule; correction.

SUMMARY: The Food and Drug Administration (FDA) is correcting a proposed rule that appeared in the **Federal Register** of February 26, 2002 (67 FR 8744). The document proposes to amend the regulation on menhaden oil which has been affirmed as generally recognized as safe as a direct human food ingredient with specific limitations. The document was published with some errors in the **FOR FURTHER INFORMATION CONTACT** section. This document corrects those errors.

FOR FURTHER INFORMATION CONTACT: Andrew Zajac, Center for Food Safety and Applied Nutrition (HFS–265), Food and Drug Administration, 5100 Paint Branch Pkwy., College Park, MD 20740–3835, 202–418–3095.

SUPPLEMENTARY INFORMATION: In the FR Doc. 02–4327, appearing in the **Federal Register** of Tuesday, February 26, 2002, the following correction is made:

1. On page 8744, in the third column, **FOR FURTHER INFORMATION CONTACT** section is corrected to read: ''Andrew Zajac, Center for Food Safety and Applied Nutrition (HFS–265), Food and Drug Administration, 5100 Paint Branch Pkwy., College Park, MD 20740–3835, 202–418–3095.''

Dated: March 29, 2002.

Leslye M. Fraser,

Acting Director, Regulations and Policy, Center for Food Safety and Applied Nutrition.

[FR Doc. 02–9363 Filed 4–16–02; 8:45 am]

BILLING CODE 4160–01–S

DEPARTMENT OF THE TREASURY

Internal Revenue Service

26 CFR Part 1

[REG–108697–02]

RIN 1545–BA60

Required Distributions From Retirement Plans

AGENCY: Internal Revenue Service (IRS), Treasury.

ACTION: Notice of proposed rulemaking by cross-reference to temporary regulations.

SUMMARY: In the Rules and Regulations section of this issue of the **Federal Register**, the IRS is issuing temporary regulations that provide guidance concerning required minimum distributions for defined benefit plans and annuity contracts providing benefits under qualified plans, individual retirement plans, and section 403(b) contracts. The regulations will provide the public with guidance necessary to comply with the law and will affect administrators of, participants in, and beneficiaries of qualified plans; institutions that sponsor and individuals who administer individual retirement plans, individuals who use individual retirement plans for retirement income, and beneficiaries of individual retirement plans; and employees for whom amounts are contributed to section 403(b) annuity contracts, custodial accounts, or retirement income accounts and beneficiaries of such contracts and accounts. The text of those temporary regulations also serves as the text of these proposed regulations.

DATES: Written or electronic comments must be received by July 16, 2002.

ADDRESSES: Send submissions to: CC:ITA:RU (REG–108697–02), room 5226, Internal Revenue Service, POB 7604, Ben Franklin Station, Washington, DC 20044. Submissions may be hand delivered Monday through Friday between the hours of 8 a.m. and 5 p.m. to: CC:ITA:RU (REG–108697–02), Courier's Desk, Internal Revenue Service, 1111 Constitution Avenue, NW., Washington, DC. Alternatively, taxpayers may submit comments electronically directly to the IRS Internet site at *http://www.irs.gov/regs.*

FOR FURTHER INFORMATION CONTACT: Cathy Vohs at 622–6090.

SUPPLEMENTARY INFORMATION:

Background

Final and Temporary regulations in the Rules and Regulations portion of this issue of the **Federal Register** amend the Income Tax Regulations (26 CFR part 1) relating to section 401(a)(9). The temporary regulations (§ 1.401(a)(9)–6T) contain rules relating to minimum distribution requirements for defined benefit plans and annuity contracts purchased with an employee's account balance under a defined contribution plan. The text of those temporary regulations also serves as the text of these proposed regulations. The preamble to the temporary regulations explains the temporary regulations.

Special Analyses

It has been determined that this notice of proposed rulemaking is not a significant regulatory action as defined in Executive Order 12866. Therefore, a regulatory assessment is not required. It also has been determined that section 553(b) of the Administrative Procedure Act (5 U.S.C. chapter 5) does not apply to these regulations. Because § 1.401(a)(9)–6 imposes no new collection of information on small entities, a Regulatory Flexibility Analysis under the Regulatory Flexibility Act (5 U.S.C. chapter 6) is not required. Pursuant to section 7805(f) of the Internal Revenue Code, this notice of proposed rulemaking will be submitted to the Chief Counsel for Advocacy of the Small Business Administration for comment on its impact on small business.

Comments and Requests for a Public Hearing

Before these proposed regulations are adopted as final regulations, consideration will be given to any written comments (a signed original and eight (8) copies) that are submitted timely to the IRS. All comments will be available for public inspection and copying.

A public hearing may be scheduled if requested in writing by a person that timely submits written comments. If a public hearing is scheduled, notice of the date, time, and place for the hearing will be published in the **Federal Register**.

Drafting Information

The principal authors of these regulations are Marjorie Hoffman and Cathy A. Vohs of the Office of the Division Counsel/Associate Chief Counsel (Tax Exempt and Government Entities). However, other personnel from the IRS and Treasury participated in their development.

List of Subjects 26 CFR Part 1

Income taxes, Reporting and recordkeeping requirements.

Proposed Amendments to the Regulations

Accordingly, 26 CFR part 1 is proposed to be amended as follows:

PART 1—INCOME TAXES

Paragraph 1. The authority citation for part 1 is amended by an entry in numerical order to read in part as follows:

Authority: 26 U.S.C. 7805 * * *

§ 1.401(a)(9)–6 is also issued under 26 U.S.C. 401(a)(9).* * *

Par. 2. Section 1.401(a)(9)–6 is added to read as follows:

§ 1.401(a)(9)–6 Required minimum distributions from defined benefit plans.

[The text of proposed § 1.401(a)(9)–6 is the same as the text of § 1.401(a)(9)–6T published elsewhere in this issue of the **Federal Register**].

Robert E. Wenzel,

Deputy Commissioner of Internal Revenue.

[FR Doc. 02–8964 Filed 4–16–02; 8:45 am]

BILLING CODE 4830–01–P

DEPARTMENT OF THE TREASURY

Internal Revenue Service

26 CFR Part 1

[REG–113526–98; REG–105369–00]

RIN 1545–AW44; 1545–AY12

Arbitrage and Private Activity Restrictions Applicable to Tax-exempt Bonds Issued by State and Local Governments; Investment-type Property (Prepayment); Private Loan (Prepayment)

AGENCY: Internal Revenue Service (IRS), Treasury.

ACTION: Withdrawal of previous notice of proposed rulemaking; notice of proposed rulemaking and notice of public hearing.

SUMMARY: This document contains proposed amendments to the final regulations on the arbitrage and private activity restrictions applicable to tax-exempt bonds issued by State and local governments. The proposed amendments affect issuers of tax-exempt bonds and provide guidance on the definitions of investment-type property and private loan to help issuers comply with the arbitrage and private activity restrictions. This document also provides notice of a public hearing on these proposed regulations.

The previous notice of proposed rulemaking (REG–113526–98), published on August 25, 1999, relating to arbitrage and related restrictions applicable to tax-exempt bonds issued by State and local governments, is withdrawn.

DATES: Written or electronic comments must be received by July 16, 2002. Outlines of topics to be discussed at the public hearing scheduled for September 24, 2002, at 10 a.m., must be received by September 10, 2002.

The previous notice of proposed rulemaking (REG–113526–98), published on August 25, 1999, relating to arbitrage and related restrictions applicable to tax-exempt bonds issued by State and local governments, is withdrawn.

ADDRESSES: Send submissions to: CC:ITA:RU (REG–105369–00), room 5226, Internal Revenue Service, POB 7604, Ben Franklin Station, Washington, DC 20044. Submissions may be hand delivered between the hours of 8 a.m. and 5 p.m. to: CC:ITA:RU (REG–105369–00), courier's desk, Internal Revenue Service, 1111 Constitution Avenue NW., Washington, DC. Alternatively, submissions may be made electronically to the IRS Internet site at *www.irs.gov/regs*. The public hearing will be held in the Auditorium, Internal Revenue Building, 1111 Constitution Avenue NW., Washington, DC.

FOR FURTHER INFORMATION CONTACT: Concerning the proposed regulations, Johanna Som de Cerff, (202) 622–3980; concerning submissions and the hearing, Sonya Cruse, (202) 622–7180 (not toll-free numbers).

SUPPLEMENTARY INFORMATION:

Background

This document contains proposed amendments to 26 CFR part 1 (the proposed regulations). On August 25, 1999, the IRS published in the **Federal Register** a notice of proposed rulemaking (REG–113526–98) (64 FR 46320) (the 1999 proposed regulations) proposing to modify § 1.148–1(e) of the Income Tax Regulations to establish which prepayments for property or services give rise to investment-type property under section 148(b)(2)(D) of the Internal Revenue Code (Code). Numerous written comments responding to the 1999 proposed regulations were received, and a public hearing was held on January 12, 2000. In response to the extensive comments, particularly with regard to certain natural gas prepayment transactions discussed below, the 1999 proposed regulations are withdrawn and amendments to § 1.148–1(e) are proposed in accordance with this notice of proposed rulemaking. This notice of proposed rulemaking also proposes corresponding amendments to § 1.141–5(c)(2) (relating to the private loan financing test).

Explanation of Provisions

I. Existing Definition of Investment-type Property

With certain exceptions, section 148 prohibits the use of proceeds of a tax-exempt bond issue to acquire investment property with a yield that materially exceeds the yield on the issue. Section 148(b)(2)(D) provides that the term *investment property* includes *investment-type property*. Section 148(b)(2)(D) was added to the Code by the Tax Reform Act of 1986, Pub. L. No. 99–514, 100 Stat. 2085 (1986) (1986 Act). The Conference Committee Report states that the legislation ''expands the types of investments of bond proceeds that are subject to the arbitrage restrictions to include all investment-type property (including other than customary prepayments) * * *.'' H.R. Conf. Rep. No. 99–841, pt. 2, at 745.

As an economic matter, prepayments for property or services generally contain a built-in investment return. That is, if a buyer of property or services makes a cash payment to the seller in advance of the seller's performance, the buyer may expect to receive an implicit investment return based on the time value of money. In the case of a prepayment financed with tax-exempt bond proceeds, the presence of a built-in investment return raises the issue of whether the prepayment gives rise to investment-type property.

The existing regulations, at § 1.148–1(e)(2), contain rules for determining when a prepayment for property or services results in investment-type property. Under that provision, a prepayment generally gives rise to investment-type property if a principal purpose for prepaying is to receive an investment return from the time the prepayment is made until the time payment otherwise would be made. However, a prepayment does not give rise to investment-type property under the existing regulations if (1) it is made

for a substantial business purpose other than investment return and the issuer has no commercially reasonable alternative to the prepayment (the business purpose exception); or (2) prepayments on substantially the same terms are made by a substantial percentage of persons who are similarly situated to the issuer but who are not beneficiaries of tax-exempt financing (the customary exception).

II. 1999 Proposed Amendments to the Definition of Investment-type Property

The 1999 proposed regulations proposed a modification to § 1.148–1(e)(2) to establish that a prepayment of a contract for property or services that is made after the date that the contract is entered into can give rise to investment-type property. This modification was proposed in light of the opinion in *City of Columbus* v. *Commissioner*, 112 F.3d 1201 (D.C. Cir. 1997), which concluded that a 1994 prepayment by a city of its indebtedness to a state did not constitute a prepayment for property the city acquired in 1967. The proposed amendment to § 1.148–1(e)(2) addressed only the narrow issue of whether a prepayment for property or services after the execution of a contract to buy the property or services can give rise to investment-type property.

Commentators generally agreed with the suggestion that a prepayment for property or services can occur after the date the purchase contract is executed. The proposed regulations retain the proposed change to § 1.148–1(e)(2), with clarifying modifications that are consistent with this concept.

III. Definition of Investment-type Property in the Proposed Regulations

Although commentators generally agreed with the 1999 proposed amendments to § 1.148–1(e)(2), they requested additional clarification of other aspects of the definition of *investment-type property*. After considering all of the comments, Treasury and the IRS have determined that additional changes to the definition are needed to provide certainty to issuers and the IRS in a manner that is consistent with the broad scope of the investment-type property concept. To allow for public comment, these additional changes are issued in proposed form. Furthermore, to provide issuers with immediate certainty, issuers may rely on the proposed regulations to the extent specified below.

Commentators generally did not recommend modifying the basic framework for determining whether a prepayment gives rise to investment-type property under § 1.148–1(e)(2). The proposed regulations retain this basic structure, but make certain modifications. In particular, the proposed regulations: (1) Amend the business purpose exception; (2) retain the customary exception in its present form; (3) add an exception for certain prepayments by municipal utilities to acquire a supply of natural gas; and (4) add a *de minimis* exception for prepayments made within 90 days of delivery of the property or services. In addition, the proposed regulations state that the Commissioner may, by published guidance, set forth additional circumstances in which a prepayment does not give rise to investment-type property.

A. Business Purpose Exception

As indicated, the existing regulations provide that a prepayment does not give rise to investment-type property if it is made for a substantial business purpose other than investment return and the issuer has no commercially reasonable alternative to the prepayment. This provision, which was intended to be a narrow exception to the definition of investment-type property, has raised difficult interpretive questions. For example, in many instances it may be unclear whether the alternatives available to the issuer are ''commercially reasonable.''

Commentators suggested certain changes to the provision to clarify its application. For example, they suggested that a prepayment should be considered made for a substantial business purpose other than investment return if the effect of the prepayment is (1) to fix the price of the property or service, (2) to assure a supply of the property or service, (3) to guarantee delivery of the property or service at a location favorable to the issuer, or (4) to enable the issuer to obtain a price discount that materially exceeds the investment return that could be earned between the time the prepayment is made and the time the property or services are delivered. Commentators suggested that an alternative should be viewed as ''commercially reasonable'' if it is reasonably available to the issuer, it would achieve the same substantial business purpose as the prepayment except that no investment return is received, and it is not more expensive by an amount that materially exceeds the investment return from the prepayment. Some commentators recommended that a safe harbor be added under which an alternative would not be considered commercially reasonable if the cost of the alternative exceeded the cost of the prepayment by a specified amount on a present value basis.

Treasury and the IRS have considered these suggested factors and have concluded that they do not, in and of themselves, represent administrable standards for distinguishing between prepayments that are made primarily for arbitrage purposes and those that are not. That is, a prepayment transaction may contain one or more of these features, even if it is primarily arbitrage-motivated. Therefore, the proposed regulations do not adopt these suggested amendments. Nevertheless, as discussed below, these factors are taken into account, together with all the other facts and circumstances, in determining whether a prepayment satisfies the business purpose exception as revised by the proposed regulations.

In this regard, the proposed regulations amend the business purpose exception in order to clarify that it is to be applied narrowly in a manner that is consistent with the broad scope of the investment-type property concept. In particular, under the proposed regulations a prepayment meets the business purpose exception if the facts and circumstances clearly establish that the primary purpose for the prepayment is to accomplish one or more substantial business purposes that (1) are unrelated to any investment return based on the time value of money, and (2) cannot be accomplished without the prepayment. This exception is intended to be very narrow and to apply only in very unique circumstances, such as the situation illustrated by an example in the proposed regulations.

B. Customary Exception

As indicated, the existing regulations provide that a prepayment does not give rise to investment-type property if prepayments on substantially the same terms are made by a substantial percentage of persons who are similarly situated to the issuer but who are not beneficiaries of tax-exempt financing. This provision implements the legislative history cited above that indicates that customary prepayments should not result in investment-type property.

Commentators suggested that a safe harbor be added for determining a ''substantial percentage'' of similarly situated persons. However, Treasury and the IRS have concluded that the determination of whether a transaction is customary is appropriately made on a case-by-case basis, taking into account all the facts and circumstances, rather than by reference to a precise mathematical formula or predetermined

percentage. Therefore, the proposed regulations do not adopt this suggested change.

Commentators also recommended that the ''substantial percentage'' requirement should be deemed satisfied if a substantial number of similarly situated persons who are not beneficiaries of tax-exempt financing make a similarly sized prepayment. The proposed regulations do not adopt this comment because the incidence of a particular number of transactions by similarly situated persons may not establish that the transaction is customary if those persons represent only a small percentage of all the similarly situated persons.

Finally, some commentators suggested that the customary exception should be automatically satisfied if the issuer and the supplier of the property or services certify reasonably and in good faith that its requirements are met. The proposed regulations do not adopt this comment because a certification by the parties to a transaction should not be sufficient to establish the legal conclusion that the transaction meets the requirements of the exception.

C. Certain Prepayments To Acquire a Supply of Natural Gas

The preamble to the 1999 proposed regulations identified certain transactions involving the issuance of bonds to prepay for a supply of natural gas and the simultaneous execution by the issuer of a commodity swap under which the issuer receives fixed payments and makes variable payments based on an index. The 1999 preamble stated that Treasury and the IRS were concerned that the transactions create investment-type property and requested comments on the transactions.

Most, but not all, of the commentators disagreed with the suggestion that the identified transactions should result in investment-type property. They stated that deregulation of the natural gas industry has threatened the ability of municipal utilities to obtain a secure supply of natural gas on commercially reasonable terms. They stated that the natural gas prepayment transactions are necessary to obtain a guaranteed supply of natural gas on favorable terms in light of deregulation.

The proposed regulations add an exception to the definition of investment-type property for certain natural gas prepayments that are made by or for one or more utilities that are owned by a governmental person, as defined in § 1.141–1(b) (for example, where a joint action agency acquires a natural gas supply for one or more municipal gas or electric utilities). The exception applies only if at least 95 percent of the natural gas purchased with the prepayment is to be consumed by retail customers in the service area of a municipal gas utility, or used to produce electricity that will be furnished to retail customers that a municipal electric utility is obligated to serve under state or Federal law. For this purpose, the service area of a municipal gas utility is defined as (1) any area throughout which the municipal utility provided (at all times during the five-year period ending on the issue date) gas transmission or distribution service, and any area that is contiguous to such an area, or (2) any area where the municipal utility is obligated under state or Federal law to provide gas distribution services as provided in such law. Issuers may apply principles similar to the rules of § 1.141–12 in order to cure a violation of this 95 percent requirement.

A transaction will not fail to qualify for this exception by reason of any commodity swap contract that may be entered into between the issuer and an unrelated party (other than the gas supplier), or between the gas supplier and an unrelated party (other than the issuer), so long as each swap contract is an independent contract. For this purpose, a swap contract is an independent contract if the obligation of each party to perform under the swap contract is not dependent on performance by any person (other than the other party to the swap contract) under another contract (for example, a gas supply contract or another swap contract).

Comments are requested on the exception for natural gas prepayments in the proposed regulations, including the definition of service area and the workability of the 95 percent test.

D. De minimis Prepayments

Commentators recommended adding to the regulations a *de minimis* exception under which prepayments that are made in small amounts or shortly before the property or services are delivered, would be disregarded. Treasury and the IRS recognize that prepayments made shortly before the property or services are delivered are unlikely to be arbitrage-motivated. Based on this consideration, and to provide administrative certainty, the proposed regulations add an exception for prepayments that are made within 90 days of the date of delivery of the property or services. However, the proposed regulations do not provide an exception for small prepayments because a prepayment may be made primarily for arbitrage purposes even if it is a small amount.

E. Timing Mismatch Between Payment and Delivery of Property or Services

The preamble to the 1999 proposed regulations requested comments regarding the proper treatment of contracts that provide for a timing mismatch between the buyer's cash payments and the seller's delivery of property or services.

Commentators generally expressed the view that, depending on the particular facts, payments made over time may give rise to investment-type property when the payment schedule does not match the schedule for the provision of property or services. The commentators did not recommend any changes to the regulations on this issue. Treasury and the IRS have determined that § 1.148–1(e)(2) appropriately addresses mismatches in payment and delivery obligations. Therefore, the proposed regulations do not propose any amendments in this regard.

F. Prepayments of Capital Charges

Some commentators recommended that the regulations be modified to provide that a prepayment does not give rise to investment-type property if it is in substance a reimbursement to a seller of all or a portion of the seller's capital costs of a specific, tangible project through which the seller produces or delivers a service or commodity. The proposed regulations do not contain a specific exception for prepayments that reimburse a seller for its capital costs because a prepayment may be made primarily for arbitrage purposes even if it effectively reimburses the seller for capital costs. Nevertheless, this factor is taken into account, together with all the other facts and circumstances, in determining whether a prepayment meets the business purpose exception.

IV. Private Loans

With certain exceptions, interest on an issue that meets the private loan financing test is not excluded from gross income. Under section 141(c), an issue generally meets the private loan financing test if more than the lesser of 5 percent or $5 million of its proceeds are used to make loans to nongovernmental persons. Section 1.141–5(c)(1) states that, for purposes of the private loan financing test, a loan may arise from the direct lending of bond proceeds or may arise from transactions in which indirect benefits that are the economic equivalent of a loan are conveyed. Thus, the determination of whether a loan is made depends on the substance of a

transaction rather than its form. *See also* H.R. Conf. Rep. No. 99–841, pt. 2, at 692.

The existing regulations, at § 1.141–5(c)(2)(ii), provide that a prepayment for property or services generally is treated as a loan for purposes of the private loan financing test if a principal purpose for prepaying is to provide a benefit of tax-exempt financing to the seller. However, under the existing regulations a prepayment is not treated as a loan for purposes of the private loan financing test if (1) it is made for a substantial business purpose other than providing a benefit of tax-exempt financing to the seller and the issuer has no commercially reasonable alternative to the prepayment; or (2) prepayments on substantially the same terms are made by a substantial percentage of persons who are similarly situated to the issuer but who are not beneficiaries of tax-exempt financing. The proposed regulations amend the private loan provisions of § 1.141–5(c)(2) to conform to the amendments to the definition of investment-type property in this notice of proposed rulemaking.

Proposed Effective Date

The proposed regulations will apply to bonds sold on or after the date of publication of final regulations in the **Federal Register**. However, issuers may apply the proposed regulations in whole, but not in part, to any issue that is sold on or after the date the proposed regulations are published in the **Federal Register** and before the effective date of the final regulations.

Special Analyses

It has been determined that this notice of proposed rulemaking is not a significant regulatory action as defined in Executive Order 12866. Therefore, a regulatory assessment is not required. It has also been determined that section 553(b) of the Administrative Procedures Act (5 U.S.C. chapter 5) does not apply to these regulations, and, because the regulations do not impose a collection of information on small entities, the Regulatory Flexibility Act (5 U.S.C. chapter 6) does not apply. Pursuant to section 7805(f) of the Code, this notice of proposed rulemaking will be submitted to the Chief Counsel for Advocacy of the Small Business Administration for comment on its impact on small business.

Comments and Public Hearing

Before these proposed regulations are adopted as final regulations, consideration will be given to any written comments that are submitted timely (preferably a signed original and eight copies) to the IRS. The Treasury Department and IRS specifically request comments on the clarity of the proposed rules and how they may be made easier to understand. All comments will be available for public inspection and copying.

A public hearing has been scheduled for September 24, 2002, at 10 a.m. in the Auditorium, Internal Revenue Building, 1111 Constitution Avenue, NW., Washington, DC. Because of access restrictions, visitors will not be admitted beyond the lobby more than 30 minutes before the hearing starts.

The rules of 26 CFR 601.601(a)(3) apply to the hearing.

Persons who wish to present oral comments at the hearing must submit written comments by July 16, 2002, and submit an outline of the topics to be discussed and the amount of time to be devoted to each topic by September 10, 2002.

A period of 10 minutes will be allotted to each person for making comments.

An agenda showing the scheduling of the speakers will be prepared after the deadline for receiving outlines has passed. Copies of the agenda will be available free of charge at the hearing.

Drafting Information

The principal authors of these regulations are Rebecca L. Harrigal and Johanna Som de Cerff, Office of Chief Counsel (TE/GE), IRS, and Stephen J. Watson, Office of Tax Policy, Treasury Department. However, other personnel from the IRS and Treasury Department participated in their development.

List of Subjects in 26 CFR Part 1

Income taxes, Reporting and recordkeeping requirements.

Proposed Amendments to the Regulations

Accordingly, 26 CFR part 1 is proposed to be amended as follows:

PART 1—INCOME TAXES

Paragraph 1. The authority citation for part 1 continues to read in part as follows:

Authority: 26 U.S.C. 7805 * * *

Par. 2. In § 1.141–5, paragraph (c) is amended as follows:

1. Paragraph (c)(2)(ii) introductory text is revised.
2. Paragraph (c)(2)(ii)(A) is revised.
3. Paragraph (c)(2)(ii)(B) is amended by removing the period at the end of the paragraph and adding a semicolon in its place.
4. Paragraphs (c)(2)(ii)(C), (c)(2)(ii)(D), and (c)(2)(iii) are added.

The revisions and additions read as follows:

§ 1.141–5 Private loan financing test.

* * * * *

(c) * * *

(2) * * *

(ii) *Certain prepayments treated as loans.* Except as otherwise provided, a prepayment for property or services, including a prepayment for property or services that is made after the date that the contract to buy the property or services is entered into, is treated as a loan for purposes of the private loan financing test if a principal purpose for prepaying is to provide a benefit of tax-exempt financing to the seller. A prepayment is not treated as a loan for purposes of the private loan financing test if—

(A) The primary purpose for the prepayment is to accomplish one or more substantial business purposes that—

(*1*) Are unrelated to providing any benefit of tax-exempt financing to the seller; and

(*2*) Cannot be accomplished without the prepayment;

* * * * *

(C) The prepayment is made within 90 days of the date of delivery to the issuer of all of the property or services for which the prepayment is made; or

(D) The prepayment meets the requirements of § 1.148–1(e)(2)(ii) (relating to certain prepayments to acquire a supply of natural gas).

(iii) *Additional prepayments as permitted by the Commissioner.* The Commissioner may, by published guidance, set forth additional circumstances in which a prepayment is not treated as a loan for purposes of the private loan financing test.

* * * * *

Par. 3. In § 1.148–1, paragraphs (e)(1) and (2) are revised to read as follows:

§ 1.148–1 Definitions and elections.

* * * * *

(e) *Investment-type property*—(1) *In general.* Investment-type property includes any property, other than property described in section 148(b)(2)(A), (B), (C) or (E), that is held principally as a passive vehicle for the production of income. For this purpose, production of income includes any benefit based on the time value of money.

(2) *Prepayments*—(i) *In general.* Except as otherwise provided in this paragraph (e)(2), a prepayment for property or services, including a prepayment for property or services that is made after the date that the contract to buy the property or services is

entered into, also gives rise to investment-type property if a principal purpose for prepaying is to receive an investment return from the time the prepayment is made until the time payment otherwise would be made. A prepayment does not give rise to investment-type property if—

(A) The primary purpose for the prepayment is to accomplish one or more substantial business purposes that—

(*1*) Are unrelated to any investment return based on the time value of money; and

(*2*) Cannot be accomplished without the prepayment;

(B) Prepayments on substantially the same terms are made by a substantial percentage of persons who are similarly situated to the issuer but who are not beneficiaries of tax-exempt financing;

(C) The prepayment is made within 90 days of the date of delivery to the issuer of all of the property or services for which the prepayment is made; or

(D) The prepayment meets the requirements of paragraph (e)(2)(ii) of this section.

(ii) *Certain prepayments to acquire a supply of natural gas.*

(A) *In general.* A prepayment meets the requirements of this paragraph (e)(2)(ii) if—

(*1*) It is made by or for one or more utilities that are owned by a governmental person, as defined in § 1.141–1(b) (*municipal utility*), to purchase a supply of natural gas; and

(*2*) At least 95 percent of the natural gas purchased with the prepayment is to be consumed by retail gas customers in the service area (as defined in paragraph (e)(2)(ii)(B) of this section) of a municipal utility, or used to produce electricity that will be furnished to retail electric customers that a municipal utility is obligated to serve under state or Federal law. An obligation that arises solely by reason of a contract is not an obligation to serve under state or Federal law.

(B) *Service area.* For purposes of paragraph (e)(2)(ii)(A)(*2*) of this section, the service area of a municipal utility shall consist of—

(*1*) Any area throughout which the municipal utility provided (at all times during the 5-year period ending on the issue date) gas transmission or distribution service, and any area that is contiguous to such an area; or

(*2*) Any area where the municipal utility is obligated under state or Federal law to provide gas distribution services as provided in such law.

(C) *Commodity swaps.* A prepayment does not fail to meet the requirements of this paragraph (e)(2)(ii) by reason of any commodity swap contract that may be entered into between the issuer and an unrelated party (other than the gas supplier), or between the gas supplier and an unrelated party (other than the issuer), so long as each swap contract is an independent contract. A swap contract is an independent contract if the obligation of each party to perform under the swap contract is not dependent on performance by any person (other than the other party to the swap contract) under another contract (for example, a gas supply contract or another swap contract).

(iii) *Additional prepayments as permitted by the Commissioner.*

The Commissioner may, by published guidance, set forth additional circumstances in which a prepayment does not give rise to investment-type property.

(iv) *Examples.* The following examples illustrate the application of this paragraph (e)(2):

Example 1. Prepayment after contract is executed. In 1998, City A enters into a ten-year contract with Company Y. Under the contract, Company Y is to provide services to City A over the term of the contract and in return City A will pay Company Y for its services as they are provided. In 2004, City A issues bonds to finance a lump sum payment to Company Y in satisfaction of City A's obligation to pay for Company Y's services to be provided over the remaining term of the contract. The use of bond proceeds to make the lump sum payment constitutes a prepayment for services under paragraph (e)(2)(i) of this section, even though the payment is made after the date that the contract is executed.

Example 2. Prepayment necessary to accomplish substantial business purpose. Authority is a governmental unit that furnishes electricity to the general public. In 1995, Authority enters into a 15-year agreement (the Agreement) with Power Company to obtain certain of its power requirements. In 2003, Authority enters into another contract (the Purchase Contract) with Power Company to obtain a specified amount of additional firm power through 2013. The rates paid by Authority under the Purchase Contract are based on a fixed capacity charge, which reflects Power Company's average cost of certain plants and equipment, and a variable energy charge, which reflects Power Company's average system energy costs to operate the utility, primarily fuel costs. Simultaneously with entering into the Purchase Contract, Authority issues a $30 million issue with a 6 percent yield and uses the proceeds to make a lump sum payment to Power Company to prepay for the entire fixed capacity charge under the Purchase Contract. Authority pays the variable energy charges as energy is actually delivered. Power Company reports the lump sum payment for Federal tax purposes as income from the sale of capacity. Power Company also agrees to certain concessions under the Agreement, including the elimination of floors on capacity charges and a moratorium on capacity charge increases for five years. The discount rate used to compute the amount of the prepayment is 18 percent, compounded semi-annually. Power Company's taxable borrowing rate for a loan of a comparable size to the prepayment, with a term that coincides with the term of the Purchase Contract, is 8 percent, compounded semiannually. The prepayment allows Power Company to offer a low capacity charge to Authority, yet prevent other wholesale customers from taking advantage of the proposal. Under Federal rate-making guidelines, if Power Company had offered Authority a contract based on fixed periodic capacity charges, Power Company would have been obligated to offer the same capacity charges to its other wholesale customers (which would have been expected to accept the offer). Power Company is willing to offer Authority the lower capacity charge and to make the other concessions because it owns surplus generating capacity. Thus, it is important to Power Company to maintain its customer base. The loss of a significant customer such as Authority would require that Power Company either succeed in obtaining regulatory authorization to increase its rates charged to other customers or suffer a diminished return on capital. Power Company will not build additional generating facilities directly or indirectly by reason of its obligations under the Purchase Contract, and at the time it entered into the Purchase Contract, it had already incurred capital costs of facilities, which, if allocated to Authority's demands for energy under the Purchase Contract, would exceed the up-front capacity charge. Under paragraph (e)(2)(i)(A) of this section, the prepayment does not give rise to investment-type property.

* * * * *

Robert E. Wenzel,

Deputy Commissioner of Internal Revenue.

[FR Doc. 02–9356 Filed 4–16–02; 4:12 pm]

BILLING CODE 4830–01–P

DEPARTMENT OF THE TREASURY

Internal Revenue Service

26 CFR Part 301

[REG–104762–00]

RIN 1545–AX89

Levy Restrictions During Installment Agreements

AGENCY: Internal Revenue Service (IRS), Treasury.

ACTION: Notice of proposed rulemaking.

SUMMARY: This document contains proposed regulations relating to restrictions on levy during the period that an installment agreement is proposed or in effect. The proposed regulations reflect changes to the law made by the Internal Revenue Service Restructuring and Reform Act of 1998.

DATE: Written or electronically generated comments and requests for a public hearing must be received by July 16, 2002.

ADDRESSES: Send submissions to: CC:ITA:RU (REG–104762–00), room 5226, Internal Revenue Service, POB 7604, Ben Franklin Station, Washington, DC 20044. Submissions may be hand delivered Monday through Friday between the hours of 8 a.m. and 5 p.m. to: CC:ITA:RU (REG–104762–00), Courier's Desk, Internal Revenue Service, 1111 Constitution Avenue, NW., Washington, DC. Alternatively, taxpayers may submit comments electronically via the IRS Internet site at www.irs.gov/regs.

FOR FURTHER INFORMATION CONTACT: Concerning the regulations, Frederick W. Schindler, (202) 622–3620; concerning submissions of comments or requests for a hearing Treena Garret, (202) 622–7180 (not toll-free numbers).

SUPPLEMENTARY INFORMATION:

Background

This document contains proposed amendments to the Procedure and Administration Regulations (26 CFR part 301) under section 6331 of the Internal Revenue Code (Code). The proposed regulations reflect the amendment of section 6331 by section 3462 of the Internal Revenue Service Restructuring and Reform Act of 1998 Public Law, 105–206, (112 Stat. 685, 764) (RRA 1998). New subsection 6331(k) codifies the IRS practice of withholding collection during consideration of a taxpayer's offer to compromise and extends that practice to proposed installment agreements. The proposed regulations deal principally with the effect of subsection 6331(k) when an installment agreement has been proposed and is pending, is in effect, or has been rejected or terminated.

Prior to the enactment of RRA 1998, the IRS had a long-standing practice of staying action to collect a liability while an offer to compromise that liability was being evaluated and considered, unless the interests of the United States would be jeopardized by doing so. See Policy Statement P–5–97 (Approved July 10, 1959), reprinted at IRM 1.5.17. To insure that the interests of the United States would not be jeopardized while collection was withheld, the IRS required that taxpayers execute a waiver of the statute of limitations for collection of the liabilities the taxpayer was attempting to compromise.

Section 3462 of RRA 1998 added subsection 6331(k) to the Code. Paragraph (1) of the new subsection codifies the IRS policy of withholding collection during the pendency of an offer to compromise by prohibiting levy while an offer to compromise is pending, for thirty days after a rejection, and during any appeal of that rejection. Temporary regulations published in the **Federal Register** on July 21, 1999, contained provisions governing the effects of subsection 6331(k) when taxpayers submit offers to compromise. See § 301.7122–1T.

Prior to RRA 1998, the IRS did not stay collection when a taxpayer submitted an offer of an installment agreement. Because installment agreements provide for the full payment of the tax liabilities at issue, the processing of requests for installment agreements is less formal and most requests were accepted or rejected within several days of receipt. Once an installment agreement took effect, regulations prohibited levy, as well as certain other enforced collection measures, unless the installment agreement provided otherwise. See § 301.6159–1(d).

Paragraph 6331(k)(2) prohibits levy while a taxpayer's proposal of an installment agreement is pending with the IRS, for thirty days after rejection of such a proposal, while an installment agreement is in effect, for thirty days after termination of an installment agreement by the IRS, and during a timely filed appeal by the taxpayer to the IRS Office of Appeals of a rejection or termination decision.

Paragraph 6331(k)(3) provides that ''rules similar to'' those contained in paragraphs (3), (4), and (5) of subsection 6331(i) shall apply generally for the purposes of subsection 6331(k). Subsection 6331(i) governs the prohibition on levy during the pendency of a proceeding for refund of a divisible tax. The cross-referenced provisions provide exceptions to the prohibitions on levy, prohibit the initiation by the IRS of court proceedings to collect while the refund proceeding is pending, and provide that the statute of limitations for collection is suspended while levy is prohibited.

The proposed regulations implement the provisions of subsection 6331(k) as they relate to installment agreements. In addition to setting forth the periods during which levy is prohibited, they adapt the rules of paragraphs (3), (4), and (5) of subsection 6331(i) in a manner tailored to the installment agreement process. The legislative history accompanying RRA 1998 explains that Congress did not intend that levy would be prohibited if the IRS determined that an offer to compromise was submitted solely to delay collection. H.R. Conf. Rep. No. 509, 105th Cong., 2d Sess. 288 (1998). Because the legislative history indicates that Congress intended the same restrictions on levy with respect to offers in compromise be applicable to installment agreements, these proposed regulations adopt the same rule with respect to proposed installment agreements that are submitted solely to delay collection.

Explanation of Provisions

The proposed regulations provide that, subject to certain exceptions, the IRS may not levy to collect a liability while a proposal to enter into an installment agreement for payment of that liability is pending, for thirty days after rejection of such a proposal, while an installment agreement is in effect, for thirty days after termination of an installment agreement by the IRS, and during a timely filed appeal of a rejection or termination by the IRS. A proposed installment agreement is considered pending when it is accepted for processing by the IRS, and remains pending until the IRS accepts or rejects it or the taxpayer withdraws the proposal. If a proposed installment agreement does not contain sufficient information for the IRS to determine whether the proposal should be accepted, the IRS will request the additional necessary information from the taxpayer and provide a reasonable time period for the taxpayer to respond. The IRS may reject the proposed installment agreement if the requested information is not provided.

Collection by levy is not prohibited if the taxpayer waives the restriction on levy in writing, if the IRS determines that the proposed installment agreement was submitted solely to delay collection, or if the IRS determines that collection of the tax liability is in jeopardy.

The proposed regulations provide that the IRS may take actions other than levy to protect the interests of the United States with respect to collection of the liability to which an installment agreement or proposed installment agreement relates. Those actions include, but are not limited to: crediting an overpayment against the liability pursuant to section 6402, filing or refiling notices of Federal tax lien, and taking action to collect from persons liable for the tax but not named in the installment agreement.

Under the proposed regulations, the IRS cannot institute a court proceeding against the taxpayer named in the installment agreement to collect the tax covered by the installment agreement. The IRS, however, may file a claim in

any bankruptcy proceeding, insolvency action, or interpleader case commenced by other creditors of the taxpayer. The IRS also may join the taxpayer in any suit instituted by or against another person liable for payment of the same liability—i.e., in situations where the liability for the tax may be established or disputed. Such proceedings may involve taxes for which more than one person may be jointly and severally liable for the same tax, or may involve persons liable for related liabilities, such as a trust fund recovery penalty under section 6672 or a personal liability for excise tax under section 4103.

While an installment agreement allows the IRS to accept the payment of tax in installments, the agreement does not conclusively establish the taxpayer's liability. A taxpayer therefore is not prohibited from seeking a refund of taxes paid pursuant to an installment agreement. Allowing the IRS to join the taxpayer in a proceeding where the liability for the tax may be established or disputed will protect the Government from having to litigate the same tax in multiple forums only to face the argument in each separate case (including, potentially, from the taxpayer named in an installment agreement) that the person or persons not party to that suit were solely or principally liable for non-payment of the taxes at issue. The proposed regulations provide, however, that if a taxpayer named in an installment agreement is joined in a proceeding and the IRS obtains a judgment against that person, then collection will continue to occur pursuant to the terms of the installment agreement.

The regulations provide that the statute of limitations for collection under section 6502 is suspended while a proposed installment agreement is pending, for thirty days after rejection or termination of an installment agreement, and during a timely filed appeal of the rejection or termination decision. The running of the collection statute resumes, however, after an installment agreement takes effect. The statute of limitations for collection shall continue to run if an exception under this section applies and levy is not prohibited with respect to the taxpayer.

These regulations apply to installment agreements proposed or entered into on or after the date final regulations are published in the **Federal Register**. However, the rules set forth in these regulations mirror practices the IRS has been following administratively since the enactment of RRA 1998.

Special Analyses

It has been determined that this notice of proposed rulemaking is not a significant regulatory action as defined in Executive Order 12866. Therefore, a regulatory assessment is not required. It also has been determined that section 553(b) of the Administrative Procedure Act (5 U.S.C. chapter 5) does not apply to these regulations, and because the regulation does not impose a collection of information on small entities, the Regulatory Flexibility Act (5 U.S.C. chapter 6) does not apply. Pursuant to section 7805(f) of the Code, this notice of proposed rulemaking will be submitted to the Chief Counsel for Advocacy of the Small Business Administration for comment on its impact on small business.

Comments and Requests for a Public Hearing

Before these proposed regulations are adopted as final regulations, consideration will be given to any written comments (a signed original and eight (8) copies) or electronically generated comments that are submitted timely to the IRS. The IRS generally requests any comments on the clarity of the proposed rule and how it may be made easier to understand.

All comments will be available for public inspection and copying.

A public hearing may be scheduled if requested in writing by a person that timely submits written comments. If a public hearing is scheduled, notice of the date, time, and place for the hearing will be published in the **Federal Register**.

Drafting Information

The principal author of these regulations is Frederick W. Schindler, Office of the Associate Chief Counsel (Procedure & Administration), Collection, Bankruptcy & Summonses Division.

List of Subjects in 26 CFR Part 301

Employment taxes, Estate taxes, Excise taxes, Gift taxes, Income taxes, Penalties, Reporting and recordkeeping requirements.

Proposed Amendments to the Regulations

Accordingly, 26 CFR Part 301 is proposed to be amended as follows:

PART 301—PROCEDURE AND ADMINISTRATION

Paragraph 1. The authority citation for part 301 continues to read in part as follows:

Authority: 26 U.S.C. 7805 ***

Par. 2. Sections 301.6331–3 and 301.6331–4 are added to read as follows:

§ 301.6331–3 Restrictions on levy while offers to compromise are pending.

Cross-reference. For provisions relating to the making of levies while an offer to compromise is pending, see § 301.7122–1T.

§ 301.6331–4 Restrictions on levy while installment agreements are pending or in effect.

(a) *Prohibition on levy*—(1) *In general.* No levy may be made to collect a tax liability that is the subject of an installment agreement during the period that a proposed installment agreement is pending with the Internal Revenue Service (IRS), for 30 days immediately following the rejection of a proposed installment agreement, during the period that an installment agreement is in effect, and for 30 days immediately following the termination of an installment agreement. If, within the 30 days following the rejection or termination of an installment agreement, the taxpayer files an appeal with the IRS Office of Appeals, no levy may be made while the rejection or termination is being considered by Appeals.

(2) *When a proposed installment agreement becomes pending.* A proposed installment agreement becomes pending when it is accepted for processing. The proposed installment agreement remains pending until the IRS accepts the proposal, the IRS notifies the taxpayer that the proposal has been rejected, or the proposal is withdrawn by the taxpayer. If a proposed installment agreement that has been accepted for processing does not contain sufficient information to permit the IRS to evaluate whether the proposal should be accepted, the IRS will request the taxpayer to provide the needed additional information. If the taxpayer does not submit the additional information that the IRS has requested within a reasonable time period after such a request, the IRS may reject the proposed installment agreement.

(3) *Revised proposals of installment agreements submitted following rejection.* If, following the rejection of a proposed installment agreement, the taxpayer makes a good faith revision of the proposal and submits the revision within 30 days of the date of rejection, no levy may be made while the IRS considers the revised proposal of an installment agreement.

(4) *Exceptions.* Paragraph (a)(1) of this section shall not prohibit levy if the taxpayer files a written notice with the IRS that waives the restriction on levy

imposed by this section, the IRS determines that the proposed installment agreement was submitted solely to delay collection, or the IRS determines that collection of the tax to which the installment agreement or proposed installment agreement relates is in jeopardy. This section will not prohibit levy to collect from any person other than the person named on the installment agreement.

(b) *Other actions by the IRS while levy is prohibited*—(1) *In general.* The IRS may take actions other than levy to protect the interests of the Government with regard to the liability named in an installment agreement or proposed installment agreement. Those actions include, for example—

(i) Crediting an overpayment against the liability pursuant to section 6402;

(ii) Filing or refiling notices of Federal tax lien; and

(iii) Taking action to collect from any person who is not named on the installment agreement or proposed installment agreement but who is liable for the tax to which the installment agreement relates.

(2) *Proceedings in court.* The IRS will not begin a proceeding in court for the collection of any liability to which an installment agreement or proposed installment agreement relates against a person named in that installment agreement while levy is prohibited by paragraph (a)(1) of this section. In any refund action, however, the IRS may file a counterclaim or third-party complaint against a person without regard to whether that person is named in an installment agreement or proposed installment agreement. In addition, the IRS may join a person named in an installment agreement in any other proceeding in which liability for the tax that is the subject of the installment agreement may be established or disputed, and may file a claim in any bankruptcy proceeding, insolvency action, or interpleader case commenced by other creditors of the taxpayer. If a person named in an installment agreement is joined in a proceeding and the IRS obtains a judgment against that person, collection will continue to occur pursuant to the terms of the installment agreement.

(c) *Statute of limitations*—(1) *Suspension of the statute of limitations on collection.* The statute of limitations under section 6502 for collection of any liability shall be suspended during the period that a proposed installment agreement is pending with the IRS, for 30 days immediately following the rejection of a proposed installment agreement, and for 30 days immediately following the termination of an installment agreement. If, within the 30 days following the rejection or termination of an installment agreement, the taxpayer files an appeal with the IRS Office of Appeals, the statute of limitations for collection shall be suspended while the rejection or termination is being considered by Appeals. The statute of limitations for collection shall continue to run if an exception under paragraph (a)(4) of this section applies and levy is not prohibited with respect to the taxpayer.

(2) *Waivers of the statute of limitations on collection.* The IRS may continue to request, to the extent permissible under section 6502 and § 301.6159–1, that the taxpayer agree to a reasonable extension of the statute of limitations for collection.

(d) *Effective date.* This section is applicable on the date final regulations are published in the **Federal Register**.

Robert E. Wenzel,

Deputy Commissioner of Internal Revenue.

[FR Doc. 02–9237 Filed 4–16–02; 8:45 am]

BILLING CODE 4830–01–P

POSTAL SERVICE

39 CFR Part 111

New Specifications for Automated Flats

AGENCY: Postal Service.

ACTION: Proposed rule.

SUMMARY: The Automated Flat Sorting Machine (AFSM) 100 represents the next step into the automated processing environment envisioned for flats mail. Mailpieces that currently qualify for automation flat rates under FSM 881 standards (*Domestic Mail Manual* C820.2.0) will be eligible for the automation flat rates provided the pieces meet the physical criteria for processing on the AFSM 100 and other preparation requirements.

DATES: Comments must be received on or before May 6, 2002.

ADDRESSES: Mail or deliver written comments to the Manager, Mail Preparation and Standards, Postal Service Headquarters, 1735 N Lynn Street, Room 3025, Arlington VA 22209–6038. Copies of all written comments will be available for inspection and photocopying at Postal Service Headquarters Corporate Library, 475 L'Enfant Plaza, SW, Room 11800, Washington, DC, between 9 a.m. and 4 p.m., Monday through Friday.

FOR FURTHER INFORMATION CONTACT: Karen A. Magazino, (703) 292–3644.

SUPPLEMENTARY INFORMATION: AFSM 100 deployment will be completed in April 2002 with 534 systems installed in field offices. With deployment of the AFSM 100s, the FSM 881s are being phased out. Currently, pieces may qualify for a flats automation rate based on the FSM 881 physical criteria as defined in Domestic Mail Manual (DMM) C820. The Postal Service plans to replace the current FSM 881 standards, with new criteria based on the physical mailpiece requirements for the AFSM 100.

Processing mail on the AFSM 100 provides tremendous savings opportunities. One of the Postal Service's objectives is to reduce processing costs by moving flat's processing from the labor-intensive manual/mechanized environment to the more efficient automated mode. The additional machine capacity provided by AFSM 100 deployment enables a reduction in the overall amount of mail processed in manual/mechanized operations.

The processing and technological capabilities of the AFSM 100 machine are vastly superior to those of the FSM 881. The AFSM 100 has three automatic feeders with throughput rates capable of exceeding 17,000 pieces per hour, and 120 individual sort separations. Challenges that arise with high speed feeders compared to manual inductions include singulation (double feeds) and acceleration (jams, stoppages). The AFSM 100 also has Optical Character (OCR) and Barcode (BCR) reader functionality. The reader scans the mailpiece in search of an address block and barcode. If a POSTNET barcode is found, the piece is sorted based on the ZIP Code information. If a POSTNET barcode is not found or cannot be read, the OCR looks for the delivery address and the piece is sorted based on the result returned by the OCR.

If the address is unreadable by the OCR, a video-coding operator must key the image and the pieces then sorted to the correct bin or worked manually. The AFSM 100 does not apply (spray on) a POSTNET barcode.

To determine the range of mailpieces compatible with the AFSM 100, we conducted controlled tests using a variety of physical mailpiece characteristics. Three mail characteristic studies were performed: a preliminary test in Baltimore, Maryland, from February 26, 2001, to March 13, 2001; a test in Denver, Colorado, from July 9, 2001, to August 1, 2001; and a study to determine maximum weight conducted in Palantine, Illinois from February 25, 2002, to March 12, 2002.

The mailing industry assisted the Postal Service and supplied many of the

mailpieces that were processed during the tests. The mailing industry's participation and coordinated efforts were crucial to the successful outcome of the tests.

The AFSM 100 preliminary test was designed with specific analytical objectives, including: (1) Identifying mail characteristic ranges where additional data would be required to determine automation compatibility, (2) identifying factors that have a significant impact on sorter performance, (3) providing data to identify threshold levels, and (4) determining mailpiece characteristics that would not require further testing. Included in this test was the evaluation of a large number of mailpiece characteristics and a subset of combinations, each individually replicated over several test decks. The data represented: jams, double-feeds, missorts, thickness, weight limitations, physical dimensions, mechanical rejects, and mailpiece damage. In addition, we tested several different polywrap materials to analyze factors such as seam and wrap direction, contents, polywrap characteristics, and overhang (selvage).

The primary mail types included in the test were folded pieces (*e.g.* tabloids), paper envelopes, bound pieces, including digest-size and perfect bound magazines and catalogs, and a variety of pieces wrapped in polywrap. Other types of mailpieces were also included in the test, such as newspapers, self-mailers, CD/DVD disks, very thin pieces, very thick pieces, and the extremes of enveloped and folded mailpieces. Each test deck had varying characteristics including length, width, thickness, structure, polywrap, overhang (selvage), seam, and wrap direction.

We designed this test to define acceptable physical mailpiece characteristics and polywrap characteristics. The results from the pilot test in Baltimore eliminated some obvious mailpieces for the second test in Denver (*e.g.,* odd-shaped envelopes and cards, pieces of non-uniform thickness, and pieces in polywrap with film-on-film coefficient of friction measuring greater than 0.5). Mailpieces tested in Denver included most types tested in Baltimore, as well as digest-sized pieces, perfect-bound and stitched magazines and catalogs, and unbound newspapers. The tabloid and digest-size pieces ranged from 8 pages to 220 pages with cover pages of varying basis weights. Other pieces tested included pieces bound on the short end, pieces with special cover folds (*e.g.* french doors, gatefolds), and pieces wrapped in 19 different types of polywrap. In addition to evaluating the polywrap characteristics, we also processed pieces to test the effects of overhang (selvage), seam, and wrap direction.

Data from these two tests have shown that the majority of the existing standards for physical dimensions—height, length, and thickness—developed for flats processed on the FSM 881 are applicable to flats processed on the AFSM 100. On the basis of these findings, the Postal Service proposes a minimum of 5 inches height x 6 inches length x 0.009 inches thick, and a maximum of 12 inches height x 15 inches length x 0.75 inches thick to qualify for AFSM 100 automation-based flat rates. The length and height of an automation-compatible flat-size mailpiece is not determined by the orientation of the address. For a piece that has a bound, folded, or closed edge (*e.g.,* a newspaper, folded envelope, tabloid or catalog), the length is the dimension parallel to the bound, folded, or closed edge. The height (vertical dimension) is the dimension perpendicular to the length. If the piece is folded more than once or is bound and then folded, the length of the piece is based on the final fold.

Anaylsis from all three tests identified a maximum weight of 20 ounces for AFSM 100 enveloped, bound, and polywrapped flat mailpieces. This will allow more BPM pieces, which primarily weigh 16 ounces or more, to qualify as flats. The resolution of the rate case has been accelerated, and the Board of Governors has approved the new rates with implementation in June 2002. Those new rates will include distinct rates for BPM flats and parcels. Flats that meet the AFSM 100 mail characteristics and criteria will be eligible for a new barcode discount of 3 cents. Therefore, defining a ''flat'' will have significant impact on mailpiece design and rate eligibility.

The test data for polywrapped pieces led us to conclude that the current seven polywrap requirements for the FSM 881 will continue to be required for polywrapped pieces processed on the AFSM 100. A new property number 8 known as ''blocking'' will also be added. Blocking is simply the property that prevents polywrapped pieces from sticking together. Overhang (selvage) requirements will remain unchanged. Polywrapped flats for which automation rates based on AFSM 100 compatibility are claimed must be individually endorsed to show they are automation-compatible. The endorsement ''USPS AFSM 100 Approved Poly'' must be placed on the address side of the piece, either on the flat itself or on the polywrap, preferably below the postage area or in another prominently visible location on the outside of the mailpiece. The polywrap certification process conducted by the mailpiece design analysts will remain the same as current procedures.

We tested three types of newspapers: broadsheet, tabloid, and quarter-fold pieces. Analysis of data collected on the processing of these newspapers resulted in our recommendation that all newpapers be prepared as quarter-folds.

The flat mail machineability tester, currently used to test FSM 881 mailpieces for rigidity, flexibility, and turning ability, will continue to be used for pieces processed on the AFSM 100. The performance of pieces with flimsy covers did cause some machine jams and damage to the mailpieces, however; sufficient data has not been collected to determine specific requirements for this type of mailpiece.

We need to conduct additional studies to determine if a basis weight for covers is critical enough to require specifications and design requirements for those mailpieces.

Although exempt from the notice and comment requirements of the Administrative Procedure Act (5 U.S.C. 401(a)), the Postal Service invites comments on the following proposed revisions to the DMMl, incorporated by reference in the Code of Federal Regulations. *See* 39 CFR part 111.

List of Subjects in 39 CFR Part 111

Postal Service.

PART 111—[AMENDED]

1. The authority citation for 39 CFR part 111 continues to read as follows:

Authority: 5 U.S.C. 552(a); 39 U.S.C. 101, 401, 403, 404, 3001–3011, 3201–3219, 3403–3406, 3621, 3626, 5001.

2. Revise the DMM as set forth below:

Domestic Mail Manual (DMM)

* * * * *

C. Characteristics and Content

* * * * *

C800 Automation-Compatible Mail

* * * * *

C820 Flats

* * * * *

1.0 BASIC STANDARDS

[Revise 1.0 to read as follows:]

Flats claimed at automation rates must meet the standards in 1.0 through 8.0 and the general and specific standards for mail, the class of mail, and the rate claimed. Pieces may qualify for

the discount based on both the dimensions and characteristics for the AFSM 100 processing under 2.0 or the dimensions and characteristics for FSM 1000 processing under 3.0 except for BPM flats, which can only qualify based on the AFSM 100 criteria. If polywrap is used with pieces that meet the AFSM 100 dimensions and characteristics under 2.0, the polywrap must meet all of the physical properties in Exhibit 4.1a and Exhibit 4.1b in order to qualify for the automation flats discount. Pieces that meet FSM 1000 criteria and do not meet all of the AFSM 100 criteria that are prepared in polywrap need to meet only physical property number 2 (haze) in Exhibit 4.1a and the criteria in Exhibit 4.1b.

[Revise the heading of 2.0 to read as follows:]

2.0 DIMENSIONS CRITERIA FOR AFSM 100 PROCESSING

2.1 Determining Length and Height

* * * * *

[Amend 2.1 by revising 2.1b to read as follows:]

The length and height of an automation-compatible flat-size mailpiece is not determined by the orientation of the address. Instead, for this standard:

* * * * *

b. For a piece that has a bound, folded, or closed edge (*e.g.,* a newspaper, folded envelope, tabloid, or catalog), the length is the dimension parallel to the bound, folded, or closed edge. The height (vertical dimension) is the dimension perpendicular to the length. If the piece is folded more than once or is bound and then folded, the length of the piece is based on the final fold.

2.2 Final Fold

[Revise 2.2 by adding AFSM 100 to read as follows:]

An AFSM 100 flat-size piece with a final fold must be designed so that the address is in view when the final folded edge is at the bottom and any intermediate bound or folded edge is to the right of the mailpiece.

2.3 Shape and Size

[Revise 2.3 to read as follows:]

Each flat-size piece must be rectangular and:

a. For height, no more than 12 inches and no less than 5 inches high.

b. For length, no more than 15 inches and no less than 6 inches long.

c. For thickness, no more than 0.75 and no less than 0.009 inch thick.

[Revise the heading and text of 2.4 to read as follows:]

2.4 Maximum Weight for Enveloped, Bound and Polywrapped Pieces

Maximum weight limits are as follows:

a. For First-Class Mail, 13 ounces.

b. For Periodicals, 20 ounces.

c. For Standard Mail, 16 ounces.

d. For Bound Printed Matter, 20 ounces.

[Remove Exhibits 2.5a(1), 2.5a(2) and Exhibit 2.5b.

2.5 Turning Ability and Deflection

[Revise 2.5 to read as follows:]

a. Turning Ability. The mailpiece must fit between two concentric arcs drawn on a horizontal flat surface, one with a radius of 15.72 inches and the other with a radius of 16.72 inches, in one of the following ways:

(1) The piece must be flexible enough to bend between the two arcs when positioned vertically, with (if applicable) the bound, folded, or final folded edge perpendicular to the surface where the arcs are drawn.

(2) If rigid (constructed of or containing inflexible materials), the piece must be small enough to allow its longest edge to be placed between the two arcs without touching the lines of the arcs.

b. Deflection. A flat-size mailpiece meeting the AFSM 100 dimensions must be rigid enough so that, when placed flat on a surface to extend unsupported 5 inches off that surface, no part of the edge of the piece that is opposite the bound, folded, or final folded edge (as applicable) deflects more than 1¾ inches (if the piece is less than ⅛ inch thick) or more than 2⅜ inches (if the piece is from ⅛ to ¾ inch thick).

c. Test Device. Testing for compliance with the above standards must be done with a flat mail machineability tester constructed to USPS specification USPS–STD–28 and following the instructions for use of that device.

* * * * *

3.0 DIMENSIONS FOR FSM 1000 FLATS

* * * * *

3.2 Address Placement and Folded Pieces

[Amend 3.2a. by revising 3.2 to read as follows:]

The following requirements apply to folded publications:

a. A flat-size piece with a final fold must be designed so that the address is in view when the final folded edge is to the right and any intermediate bound or folded edge is at the bottom.

b. Unbound flat-sized publications must be double-folded.

* * * * *

[Revise the heading of 4.0 by adding Polywrap to read as follows:]

4.0 POLYWRAP COVERINGS

* * * * *

[Revise the heading of Exhibit 4.1a by adding ''polywrap'' to read as follows:]

Exhibit 4.1a AFSM 100 Polywrapped Flats Specifications

[Revise Exhibit 4.1a to read as follows:]

Polywrapped automation flats that meet the dimensions and criteria for the AFSM 100 in 2.0 must be prepared with polywrap that meets all eight properties in this exhibit. For other pieces prepared with polywrap that do not meet all of the dimensions and characteristics for processing on the AFSM 100 and that meet the dimensions and other criteria for processing on the FSM 1000 in 3.0, the polywrap need to meet only physical property number 2 (haze).

[Amend Property number 3a and b by reversing requirement column and add new number 8 to read as follows:]

Property	Requirement	Test method	Comment
*	*	*	*
3. Secant Modulus, 1% elongation:			
a. TD, psi	50,000	ASTM D 882.	
b. MD, psi	40,000	ASTM D 882.	

Property	Requirement	Test method	Comment
* * *	* *	*	*
8. Blocking, g	<15	ASTM D 3354–96.	

Exhibit 4.1b Wrap Instructions

[Revise Exhibit 4.1b to read as follows:]

1. Wrap direction will be specified as around the longer axis of the mailpiece so that the seam is along the addressed side of the mailpiece, and oriented parallel to the longest direction. This seam must not cover any part of the address and barcode read areas.

2. a. For AFSM 100 mailpieces, overhang (selvage) cannot be more than 0.75 inches from the top of the mailpiece and 0.75 inches from the bottom of the mailpiece when the mailpiece is centered inside of the polywrap. Overhang (selvage) of not more than 1.5 inches will be allowed at the top of the mailpiece when the contents are totally positioned at the bottom of the polywrap. Overhang on each side must not be more than 0.25 inch. The piece must not be wrapped so tightly as to cause the mailpiece to bend.

b. For FSM 1000 mailpieces, overhang (selvage) cannot be more than 0.75 inches from any edge when the mailpiece is centered inside of the polywrap. Overhang (selvage) of not more than 1.5 inches will be allowed at the top of the mailpiece when the contents are totally positioned at the bottom of the polywrap and not more than 1.5 inches when the contents are positioned totally to the left or to the right side of the polywrap.

4.2 Polywrap Certification Process

[Revise 4.2 by changing "FSM 881" to read as "AFSM 100". No other changes to text.]

4.3 Mailpiece Identification

[Revise the first sentence of 4.3 to read as follows:]

Polywrapped flats must be endorsed to show that the polywrap has been approved by the USPS as automation compatible regardless of the placement of the address label. * * *

* * * * *

[Revise the heading and text of 4.5 by changing "FSM 881" to read as "AFSM 100".]

* * * * *

4.6 FSM 1000 Polywrap

[Revise 4.6 by adding the following sentence at the end:]

* * * When the address label is placed on the outside of the polywrap, the haze requirement does not apply.

* * * * *

G. General Information

G000 The USPS and Mailing Standards

* * * * *

G090 Experimental Classification and Rates

* * * * *

G094 Ride-Along Rate for Periodicals

1.0 Basic Eligibility

* * * * *

1.3 Physical Characteristics

[Revise item c by changing "FSM 881" to "AFSM 100:]

* * * * *

M. Mail Preparation and Sortation

* * * * *

M800 All Automation Mail

* * * * *

M820 Flat-Size Mail

1.0 BASIC STANDARDS

* * * * *

1.5 Package Preparation

[Revise 1.5 by replacing "FSM 881" to "AFSM 100".]

1.6 Sack Preparation

[Revise 1.6 by replacing "FSM 881" with "AFSM 100". No other changes to text.]

Mailers may combine AFSM 100 packages and FSM 1000 packages in the same tray (First-Class Mail) or in the same sack (Standard Mail, Bound Printed Matter, and Periodicals).

* * * * *

1.11 Tray-Based Preparation

[Revise 1.11 by changing "FSM 881" to "AFSM 100".]

* * * * *

R. Rates and Fees

* * * * *

R200 PERIODICALS

1.0 Outside-County—Excluding Science-of-Agriculture

* * * * *

1.2 Piece Rates

[Revise the footnote to read as follows:]

* * * * *

1. Lower maximum weight limits apply: letter-size at 3 ounces (or 3.3 ounces for heavy letters); flat-size at 20 ounces for enveloped, bound and polywrapped pieces (AFSM 100) and 6 pounds (FSM 1000).

* * * * *

An appropriate amendment to 39 CFR 111.3 to reflect these changes will be published if the proposal is adopted.

Neva Watson,

Attorney, Legislative.

[FR Doc. 02–9306 Filed 4–16–02; 8:45 am]

BILLING CODE 7710–12–P

LEGAL SERVICES CORPORATION

45 CFR Part 1626

Restrictions on Legal Assistance to Aliens; 1626 Negotiated Rulemaking Working Group Meeting

AGENCY: Legal Services Corporation.

ACTION: Regulation negotiation working group meeting.

SUMMARY: LSC is conducting a Negotiated Rulemaking to consider revisions to its alien representation regulations at 45 CFR Part 1626. This document announces the dates, times, and address of the next meeting of the working group, which is open to the public.

DATES: The Legal Services Corporation's 1626 Negotiated Rulemaking Working Group will meet on May 9–10, 2002. The meeting will begin at 9 a.m. on May 9, 2002. It is anticipated that the meeting will end by 3:30 p.m. on May 10, 2002.

ADDRESS: The meeting will be held in the First Floor Conference Room at the offices of Marasco Newton Group, Inc., 2425 Wilson Blvd., Arlington, VA 22201.

FOR FURTHER INFORMATION CONTACT: Mattie C. Condray, Senior Assistant General Counsel, Legal Services

Corporation, 750 First St., N.E., 11th Floor, Washington, DC, 20001; (202) 336–8817 (phone); (202) 336–8952 (fax); *mcondray@lsc.gov.*

SUPPLEMENTARY INFORMATION: LSC is conducting a Negotiated Rulemaking to consider revisions to its alien representation regulations at 45 CFR Part 1626. The working group will hold its next meeting on the dates and at the location announced above. The meeting is open to the public. Upon request, meeting notices will be made available in alternate formats to accommodate visual and hearing impairments. Individuals who have a disability and need an accommodation to attend the meeting may notify Ms. Condray.

Victor M. Fortuno,

Vice President for Legal Affairs, General Counsel & Corporate Secretary.

[FR Doc. 02–9330 Filed 4–16–02; 8:45 am]

BILLING CODE 7050–01–P

CORPORATION FOR NATIONAL AND COMMUNITY SERVICE

45 CFR Part 2551

RIN 3045–AA29

Senior Companion Program; Amendments

AGENCY: Corporation for National and Community Service.

ACTION: Proposed rule.

SUMMARY: These amendments to the Final Regulation governing the Senior Companion Program include the addition of persons with limited English speaking proficiency as eligible participants, clarify that the value of food, clothing and shelter is to be counted as income if provided at no cost by any source, adjust income eligibility levels in high cost areas, reduce restrictions on sponsors and volunteer eligibility, provide for volunteer leaders authorized by the Domestic Volunteer Service Act of 1973, as amended, and permit Senior Companions to serve the 1044 hours in a nine month period.

DATES: Submit comments on or before June 17, 2002.

ADDRESSES: Send comments to the Corporation for National and Community Service, National Senior Service Corps, Attn: Mr. Peter L. Boynton, 9th Floor, 1201 New York Avenue, NW, Washington, DC, 20525. Comments may be e-mailed to *Pboynton@cns.gov.*

FOR FURTHER INFORMATION CONTACT: Peter L. Boynton, 202–606–5000, ext. 499.

SUPPLEMENTARY INFORMATION:

Background

The Final Regulation that is the subject of this amendment implemented changes to the Domestic Volunteer Service Act of 1973, as amended, and established or clarified minimum program requirements. The following changes to the Final Regulation are being proposed:

(1) Section 2551.23 (c) (2) (iv) provides that the Memorandum of Understanding between a sponsor and a volunteer station must contain an assurance that the volunteer station will not discriminate against Foster Grandparents or in the operation of its station. Executive Order 13166 issued August 11, 2000, requires that each Federal agency develop a plan to improve access to its programs by eligible persons who, as a result of national origin, are limited in their English proficiency. The intent of the proposed amendment is to improve access of persons with limited English proficiency.

(2) Section 2551.42 (b) provides that annual income is counted for the past 12 months. As currently worded, this applies to new applicants to the program as well as those who continue in service. However, in the case of new applicants to become stipended Senior Companions, the Corporation intends that sponsors use the applicant's projected income over the following 12 months to determine eligibility. This proposed amendment would permit additional recent retirees, or others whose household income has been reduced within the past 12 months, to serve as Senior Companions.

(3) Section 2551.51 provides that a Senior Companion must serve a minimum of nine months a year for an average of 20 hours of service per week and a maximum of 1044 hours per year. The proposed amendment would allow Senior Companion Program sponsors increased flexibility in determining the hours of service for Senior Companions in accordance with local needs, within a range of from 15 to 40 hours per week, subject to a maximum of 2088 hours per year.

(4) Section 2551.61 details conditions under which a Senior Companion Program sponsor may serve as a volunteer station. The Corporation believes these conditions should be expanded. Since each sponsor currently submits workplans with its grant application for approval by the Corporation State Office, the Corporation believes the review of these workplans provides sufficient basis for deciding the appropriateness of a given sponsor serving as a volunteer station. The proposed amendment would permit a sponsor to serve as a volunteer station provided that this is part of a workplan submitted with the application.

(5) When the Final Regulation was published, in an effort to be consistent with Foster Grandparent Program Regulations, we did not include provision for volunteer leaders. The Domestic Volunteer Service Act of 1973, as amended, authorizes volunteer leaders in the Senior Companion Program. Sections 2551.45, 2551.71 and 2551.72 are being amended to include volunteer leaders.

List of Subjects in 45 CFR Part 2551

Aged, Grant programs—social programs, Volunteers.

For the reasons set forth in the preamble, the Corporation for National and Community Service proposes to amend 45 CFR part 2551 as follows:

PART 2551—SENIOR COMPANION PROGRAM

1. The authority citation for part 2551 continues to read as follows:

Authority: 42 U.S.C. 4950 *et seq.*

2. Revise § 2551.23(c)(2)(iv) to read as follows:

§ 2551.23 What are a sponsor's program responsibilities?

* * * * *

(c) * * *

(2) * * *

(iv) That states the station assures it will not discriminate against volunteers or in the operation of its program on the basis of race; color; national origin, including individuals with limited English proficiency; sex; age; political affiliation; religion; or on the basis of disability, if the participant or member is a qualified individual with a disability; and

* * * * *

3. In § 2551.42, revise paragraph (b) to read as follows:

§ 2551.42 What income guidelines govern eligibility to serve as a stipended Senior Companion?

* * * * *

(b) For applicants to become stipended Senior Companions, annual income is projected for the following 12 months, based on income at the time of application. For serving stipended Senior Companions, annual income is counted for the past 12 months. Annual income includes the applicant or enrollee's income and that of his/her spouse, if the spouse lives in the same residence. Sponsors shall count the value of shelter, food, and clothing, if

provided at no cost by persons related to the applicant, enrollee, or spouse.

* * * * *

4. Amend § 2551.45 by republishing the introductory text and adding paragraph (f) to read as follows:

§ 2551.45 What cost reimbursements are provided to Senior Companions?

Cost reimbursements include:

* * * * *

(f) *Leadership incentive.* Senior Companions who serve as volunteer leaders, assisting new Senior Companions or coordinating other Senior Companions in accordance with the Act, may be paid a monetary incentive.

5. Revise § 2551.51 to read as follows:

§ 2551.51 What are the terms of service of a Senior Companion?

A Senior Companion shall serve a minimum of 15 hours per week and a maximum of 40 hours per week. A Senior Companion shall not serve more than 2088 hours per year. Within these limitations, a sponsor may set service policies consistent with local needs.

6. Revise § 2551.61 to read as follows:

§ 2551.61 May a sponsor serve as a volunteer station?

Yes, a sponsor may serve as a volunteer station, provided this is part of the application workplan approved by the Corporation.

7. Revise § 2551.71 to read as follows:

§ 2551.71 What requirements govern the assignment of Senior Companions?

(a) Senior Companion assignments shall provide for Senior Companions to give direct services to one or more eligible adults that:

(1) Result in person-to-person supportive relationships with each client served.

(2) Support the achievement and maintenance of the highest level of independent living for their clients.

(3) Are meaningful to the Senior Companion.

(4) Are supported by appropriate orientation, training, and supervision.

(b) Senior Companions may serve as volunteer leaders, and in this capacity may provide indirect services. Senior Companions with special skills or demonstrated leadership ability may assist newer Senior Companion volunteers in performing their assignments and in coordinating activities of such volunteers.

(c) Senior Companions shall not provide services such as those performed by medical personnel, services to large numbers of clients, custodial services, administrative support services, or other services that would detract from their assignment.

8. Revise § 2551.72 to read as follows:

§ 2551.72 Is a written volunteer assignment plan required for each volunteer?

(a) All Senior Companions performing direct services to individual clients in home settings and individual clients in community-based settings, shall receive a written volunteer assignment plan developed by the volunteer station that:

(1) Is approved by the sponsor and accepted by the Senior Companion;

(2) Identifies the client(s) to be served;

(3) Identifies the role and activities of the Senior Companion and expected outcomes for the client(s);

(4) Addresses the period of time each client is expected to receive such services; and

(5) Is used to review the status of the Senior Companion's services in working with the assigned client(s), as well as the impact of the assignment on the client(s).

(b) If there is an existing plan that incorporates paragraphs (a)(2), (3), and (4) of this section, that plan shall meet the requirement.

(c) All Senior Companions serving as volunteer leaders shall receive a written volunteer assignment plan developed by the volunteer station that:

(1) Is approved by the sponsor and accepted by the Senior Companion;

(2) Identifies the role and activities of the Senior Companion and expected outcomes;

(3) Addresses the period of time of service; and

(4) Is used to review the status of the Senior Companion's services identified in the assignment plan, as well as the impact of those services.

Dated: April 10, 2002.

Tess Scannell,

Director, National Senior Service Corps.

[FR Doc. 02–9199 Filed 4–16–02; 8:45 am]

BILLING CODE 6050–$$–P

CORPORATION FOR NATIONAL AND COMMUNITY SERVICE

45 CFR Part 2552

RIN 3045–AA30

Foster Grandparent Program; Amendments

AGENCY: Corporation for National and Community Service.

ACTION: Proposed rule.

SUMMARY: These amendments to the Final Regulation governing the Foster Grandparent Program include: providing increased flexibility to sponsors to determine the hours of service of Foster Grandparents; reducing restrictions on sponsors serving as volunteer stations; clarifying what income should be counted for purposes of determining income eligibility of an applicant to become a stipended Foster Grandparent; and improving access of persons with limited English speaking proficiency.

DATES: Submit comments on or before June 17, 2002.

ADDRESSES: Send comments to the Corporation for National and Community Service, National Senior Service Corps, Attn: Mr. Peter L. Boynton, 9th Floor, 1201 New York Avenue, NW, Washington, DC 20525. Comments may be e-mailed to *Pboynton@cns.gov.*

FOR FURTHER INFORMATION CONTACT: Peter L. Boynton, 202–606–5000, ext. 499.

SUPPLEMENTARY INFORMATION:

Background

The Final Regulation that is the subject of this amendment implemented changes to the Domestic Volunteer Service Act of 1973, as amended, and established or clarified minimum program requirements. The following changes to the Final Regulation are being proposed:

(1) Section 2552.23(c)(2)(iv) provides that the Memorandum of Understanding between a sponsor and a volunteer station must contain an assurance that the volunteer station will not discriminate against Foster Grandparents or in the operation of its station. Executive Order 13166 issued August 11, 2000, requires that each Federal agency develop a plan to improve access to its programs by eligible persons who, as a result of national origin, are limited in their English proficiency. The intent of the proposed amendment is to improve access of persons with limited English proficiency.

(2) Section 2552.42(b) provides that annual income is counted for the past 12 months. As currently worded, this applies equally to new applicants to the program as well as those who continue in service. However, in the case of new applicants to become stipended Foster Grandparents, the Corporation intends that sponsors use the applicant's projected income over the following 12 months to determine eligibility. This amendment would permit additional recent retirees, or others whose household income has been reduced within the past 12 months, to serve as Foster Grandparents.

(3) Section 2552.51 provides that a Foster Grandparent must serve a

minimum of nine months a year for an average of 20 hours of service per week and a maximum of 1044 hours per year. The proposed amendment would allow Foster Grandparent Program sponsors increased flexibility in determining the hours of service for Foster Grandparents in accordance with local needs, within a range of from 15 to 40 hours per week, subject to a maximum of 2088 hours per year.

(4) Section 2552.61 details conditions in which a Foster Grandparent Program sponsor may serve as a volunteer station. The Corporation believes these conditions should be expanded. Since each sponsor currently submits workplans with its grant applications for approval by the Corporation State Office, the Corporation believes the review of these workplans provides sufficient basis for deciding the appropriateness of a given sponsor serving as a volunteer station. The proposed amendment would permit a sponsor to serve as a volunteer station provided that this is part of a workplan submitted with the application.

List of Subjects in 45 CFR Part 2552

Aged, Grant programs—social programs, Volunteers.

For the reasons set forth in the preamble, the Corporation for National and Community Service proposes to amend 45 CFR part 2552 as follows:

PART 2552—FOSTER GRANDPARENT PROGRAM

1. The authority citation for part 2552 continues to read as follows:

Authority: 42 U.S.C. 4950 *et seq.*

2. Revise § 2552.23(c)(2)(iv) to read as follows:

§ 2552.23 What are a sponsor's program responsibilities?

* * * * *

(c) * * *

(2) * * *

(iv) That states the station assures it will not discriminate against Foster Grandparents or in the operation of its program on the basis of race; color; national origin, including individuals with limited English proficiency; sex; age; political affiliation; religion; or on the basis of disability, if the participant or member is a qualified individual with a disability; and

* * * * *

3. In § 2552.42, revise paragraph (b) to read as follows:

§ 2552.42 What income guidelines govern eligibility to serve as a stipended Foster Grandparent?

* * * * *

(b) For applicants to become stipended Foster Grandparents, annual income is projected for the following 12 months, based on income at the time of application. For serving stipended Foster Grandparents, annual income is counted for the past 12 months. Annual income includes the applicant or enrollee's income and that of his/her spouse, if the spouse lives in the same residence. Sponsors shall count the value of shelter, food, and clothing, if provided at no cost by persons related to the applicant, enrollee, or spouse.

* * * * *

4. Revise § 2552.51 to read as follows:

§ 2552.51 What are the terms of service of a Foster Grandparent?

A Foster Grandparent shall serve a minimum of 15 hours per week and a maximum of 40 hours per week. A Foster Grandparent shall not serve more than 2088 hours per year. Within these limitations, a sponsor may set service policies consistent with local needs.

5. Revise § 2552.61 to read as follows:

§ 2552.61 May a sponsor serve as a volunteer station?

Yes, a sponsor may serve as a volunteer station, provided this is part of the application workplan approved by the Corporation.

Dated: April 10, 2002.

Tess Scannell,

Director, National Senior Service Corps.

[FR Doc. 02–9200 Filed 4–16–02; 8:45 am]

BILLING CODE 6050–$$–P

FEDERAL COMMUNICATIONS COMMISSION

47 CFR Part 76

[CS Docket No. 02–52; FCC 02–77]

Appropriate Regulatory Treatment for Broadband Access to the Internet Over Cable Facilities

AGENCY: Federal Communications Commission.

ACTION: Notice of proposed rulemaking.

SUMMARY: This document addresses the consequences of the Commission's classification of cable modem service as an information service as defined in section 3(20) of the Communications Act, 47 U.S.C. 153(20). Cable modem service is a service that uses cable system facilities to provide residential subscribers with high-speed Internet access, as well as many applications or functions that can be used with high-speed Internet access.

The Notice of Proposed Rulemaking asks questions about whether, and if so, how, cable modem service should be regulated by the Commission. This document also seeks comment on how the classification decision may affect State and local regulation of cable modem service. This document provides persons with the opportunity to submit comments and information with which the Commission can address these issues.

DATES: Comments are due on or before June 17, 2002 and reply comments are due on or before July 16, 2002.

ADDRESSES: Federal Communications Commission, 445 12th Street, SW., Washington, DC 20554.

FOR FURTHER INFORMATION, CONTACT: Steve Garner, Media Bureau at (202) 418–1063 or via Internet at *sgarner@fcc.gov.*

SUPPLEMENTARY INFORMATION: This is a synopsis of the Commission's Notice of Proposed Rulemaking, CS Docket No. 02–52, adopted March 14, 2002, and released March 15, 2002. The full text of this decision is available for inspection and copying during normal business hours in the FCC Reference Information Center, Portals II, 445 12th Street, SW., Room CY–A257, Washington, DC 20554, and may be purchased from the Commission's copy contractor, Qualex International, Portals II, 445 12th Street, SW., Room CY–B402, Washington, DC 20554, telephone (202) 863–2893, facsimile (202) 863–2898, or via e-mail *qualexint@aol.com* or may be viewed via Internet at *http://hraunfoss.fcc.gov/edocs_public/attachmatch/FCC–02–77A1.pdf.*

Synopsis of the Notice of Proposed Rulemaking

1. This Notice of Proposed Rulemaking (''NPRM'') was initiated based on the record developed in the Notice of Inquiry (''NOI'') proceeding initiated in GN Docket No. 00–185 in September 2000. The NOI pleading cycle, in which interested parties (''commenters'') could file pleadings, ended in January 2001.

2. This NPRM concerns cable modem service, which is a high-speed (or ''broadband'') Internet access service provided to residential subscribers over cable system facilities. The Commission found in a Declaratory Ruling accompanying the NPRM that cable modem service is an information service as that terms is defined in Section 3(20) of the Communications Act of 1934, as amended (''the 1934 Act''), 47 U.S.C. 153(20). The NPRM addresses a number of possible consequences of the Commission's classification of cable modem service as an information service. The following paragraphs

describe the issues on which the Commission asks for comment in the NPRM.

Background

3. The NPRM first seeks comment on the Commission's jurisdiction and authority to regulate cable modem service. The NRPM also seeks comment on whether the Commission may, and, if so, should, impose any form of so-called ''multiple ISP (Internet Service Provider) access'' requirements on operators of cable systems (''cable operators''). The NPRM describes multiple ISP access as a requirement that cable operators provide unaffiliated ISPs with the right access to cable modem service customers directly. Previously, the NOI sought comment on a variety of models by which a cable operator could be required to provide multiple ISP access. The NPRM requests commenters to specify, in asking the questions summarized below, whether commenters are addressing any form of multiple ISP access in particular, on all forms described in the Notice of Inquiry, and whether any access requirement should specifically limit ISP access to uses related to the offering of cable modem service, or should explicitly permit other uses by ISPs.

Commission Authority

4. Given its classification of cable modem service as an interstate information service, the Commission asks for comment on whether the Commission should exercise its ancillary authority under Title I of the 1934 Act with regard to the provision of cable modem service. In another recent NPRM, concerning broadband Internet access service provided by traditional wireline telecommunications common carriers (the ''*Wireline Broadband NPRM*''), the Commission tentatively concluded that wireline broadband Internet access service is an interstate information service. In the present NPRM, the Commission asks how its findings and decisions in one proceeding should impact the other. It also requests comment on whether there are legal or policy reasons why it should reach different conclusions with respect to wireline broadband Internet access service and cable modem service. Should any decision to exercise Title I jurisdiction over either service be influenced by the cable operators' current status as the leading providers of residential broadband services?

5. The NPRM seeks comment on any explicit statutory provisions, including expressions of congressional goals, which would be furthered by the Commission's exercise of ancillary jurisdiction over cable modem service. The Commission mentions as possibilities sections 1, 230(b), and 601(4) of the 1934 Act and section 706 of the 1996 Telecommunications Act. The NPRM requests comment on the use of these or other statutory provisions as the basis for the Commission's exercise of Title I jurisdiction. It also requests comment on whether reliance on ancillary jurisdiction in support of these or other provisions would be analogous to the Commission's reliance on ancillary jurisdiction in adoption of its *Computer Inquiry* rules. In addition, given the relationship of cable modem service (including the underlying transmission component) to services provided by wireline common carriers, the NPRM seeks comment on whether there are any additional bases for asserting ancillary jurisdiction.

6. The NPRM seeks comment on whether a federally mandated system of multiple ISP access would violate the First Amendment rights of cable operators. The NPRM seeks comment in particular on the level of First Amendment scrutiny that would apply to a federal multiple ISP access requirement, especially in light of recent case law or Commission precedent concerning the First Amendment. Have marketplace conditions in the residential high-speed Internet access business changed since the close of the pleading cycle in this proceeding in ways that alter the First Amendment analysis? Have trials and limited commercial offerings of different kinds of multiple ISP access shown that certain types of access place a minimal burden on the cable operators while achieving the maximum choice for subscribers?

7. The NPRM also seeks comment whether multiple ISP access would constitute a ''*per se*'' or ''regulatory'' taking of the cable operator's property without just compensation under the Takings Clause of the Fifth Amendment to the U.S. Constitution. It seeks comment on what, if a form of multiple ISP access did entail a taking, would be ''just compensation'' for it. Would ensuring just compensation necessarily involve regulators in setting the price that a cable operator charges unaffiliated ISPs (or vice versa)? Or could just compensation be ensured by some market-based process of negotiations? Do recent technological developments, technical trials, and limited commercial offerings of multiple ISP access indicate that some forms of multiple ISP access minimize occupation of the cable operator's property and economic harm to it? The NPRM requests comment on these issues. The NPRM also seeks comment on whether there are additional Constitutional concerns related to multiple ISP access requirements.

Marketplace Developments

8. The NPRM asks that commenters update the record on what has changed in the cable modem service marketplace since the pleading cycle on the Notice of Inquiry closed, particularly with respect to evolving business relationships among cable operators and their service offerings. Do recent events demonstrate that the market will provide consumers a choice of ISPs without government intervention, or that the absence of widespread business arrangements raises a level of concern sufficient to warrant Commission action? The NPRM asks that commenters who believe that Commission intervention is necessary describe in detail what sort of regulations the Commission should impose. It also asks for comment regarding whether any decision the Commission makes about multiple access requirements for cable systems in this proceeding should apply to Open Video Systems.

9. The NPRM asks whether, in current and likely future market conditions, any form of multiple ISP access is needed to promote the Commission's goals of, for example, promoting the deployment of advanced telecommunications capability; spurring investment in facilities to provide high-speed Internet access service and innovation among service providers, ISPs, and creators of content; and/or facilitating intramodal or intermodal competition. Or would multiple ISP access, if mandated by regulation, have the opposite effects? The NPRM seeks comment on whether the Commission's decision-making should be guided by principles that embrace intramodal competition. If so, the NPRM seeks comment on whether the market can or will satisfy these principles or whether some form of multiple ISP access regime for cable systems is needed to do so. To what extent should any decision regarding multiple ISP access requirements be influenced by the desirability of 'regulatory parity,' namely the presence or absence of multiple ISP access regimes for other technologies (such as wireline, terrestrial wireless, and satellite) that offer residential high-speed Internet access service? To what extent should that decision be impacted by cable operators' current status as the leading providers of residential broadband services?

10. *Consumer Demand.* The NPRM asks whether there is a demand for

access to several ISPs and, if there is, whether that demand is being met today. Specifically, does ''click through'' access to any ISP and content on the World Wide Web produce the same, or almost the same, value that a regulatory system of multiple ISP access would produce? Is any cable operator or ISP denying, or likely to deny, click through access? Is the threat that subscriber access to Internet content or services could be blocked or impaired, as compared to content or services provided by the cable operator or its affiliated ISP, sufficient to justify regulatory intervention at this time?

11. *Cost/Benefit Analysis.* The NPRM requests comment on the costs that a multiple ISP access mandate would impose on cable operators and on the benefits that a mandate would bring to consumers. Would some forms of multiple ISP access be less costly to cable operators and more beneficial to consumers than others? Is the cost/benefit calculation for multiple ISP access different for small cable operators than it is for others? Would the requirements imposed on telecommunications carriers by the Commission's *Second Computer Inquiry* or *Third Computer Inquiry* provide a useful model for a multiple ISP access regime? Would the new forms of multiple ISP access that are being deployed or are under consideration by cable operators, such as the model being implemented by AOL Time Warner pursuant to the Federal Trade Commission's AOL Time Warner Merger Order, provide useful models? Other possible means of effecting a multiple ISP access regime include adopting a general rule of reasonableness for cable operators in their dealings with ISPs seeking access to their cable systems and/or requiring cable operators to make high-speed transmission available to other ISPs at ''market-based prices.'' The Commission could then rely on its complaint processes to resolve individual disputes about these standards. The NPRM asks whether such a system of general principles and case-by-case adjudication would achieve the Commission's goals in a timely and cost-effective manner.

12. The NPRM asks what lessons, if any, trials and current commercial offerings of multiple ISP access reveal about the costs and benefits of multiple ISP access and how such costs and benefits can be balanced. Has recent experience with the addition of source-based routers showed that technology to be an efficient form of multiple ISP access?

13. The NPRM asks for comment on be the costs of regulatory enforcement of a multiple ISP access mandate. Would a multiple ISP access mandate lead to significant opportunities for regulatory arbitrage—businesses making decisions based on regulatory classifications rather than on customers' preferences and innovative and sustainable business plans? Would a multiple ISP access mandate impose long-term costs on the market? In light of the new and fast-changing nature of the residential high-speed Internet access business, would a multiple ISP access requirement, imposed at this time, hinder the development of a market that is still evolving? In particular, might a requirement preclude the discovery of network design, content, applications, and business models that would otherwise enjoy widespread adoption and enhance long-term consumer welfare? Is there a way to implement multiple ISP access now that would avoid any such harmful interference in the future and that would achieve the Commission's goals? If the Commission adopts a multiple ISP access mandate for cable systems generally, should it exempt small cable systems from such a mandate because of the particular conditions that they face?

14. The NPRM notes that the Commission is particularly interested in comments that provide updated information and discuss relevant regulatory and judicial decisions issued since the comment period closed for the Notice of Inquiry in GN Docket 00–185. The Commission is likely to find particularly relevant and persuasive empirically supported studies that use well-established methods for quantifying benefits and harms, as well as comments based on well-established economic theory.

15. *Changing Market Conditions.* Assuming that the Commission ultimately concludes not to impose multiple ISP access at this time, the NPRM asks what, if any, future events should lead it to do so. Are there market conditions that are not currently pervasive but, should they become pervasive, would suggest the need for a multiple ISP access mandate in the future? Would these conditions include the acquisition of market power by cable operators in providing residential high-speed Internet access, cable operators' refusals to satisfy subscriber demand for multiple ISP access, or the evolution of a mature market for residential high-speed Internet access? Would a finding that subscriber access to Internet content or services may be blocked or impaired, as compared to other content or services, particularly that provided by the cable operator or its affiliate, support regulatory intervention? The NPRM seeks comment on other conditions that would suggest regulation is needed and on objective, readily measurable criteria by which the Commission could detect the occurrence of such conditions. It asks whether ongoing monitoring is appropriate to ensure that any relevant conditions are detected accurately and in a timely manner and, if so, what that monitoring would consist of.

16. The NPRM also seeks comment on indicia that a cable operator is offering a common carrier telecommunications service (other than local telephone service) or a private carrier service, on a stand-alone basis, to ISPs or subscribers. The NPRM asks how the Commission might detect that a cable operator is, in fact, making such an offering. If and when a cable operator makes such an offering, what, if any, access requirements should the Commission impose on it? For example, if the Commission found that a cable operator were making such an offering, would that trigger the requirements of the *Second Computer Inquiry* and *Third Computer Inquiry* with respect to the retail offering of cable modem service to subscribers, or make their application in the public interest? To what extent should these decisions impact, or be impacted by, the conclusions made in the *Wireline Broadband NPRM* proceeding? The NPRM asks for comment on the appropriate scope of regulation of any such offerings of telecommunications service.

17. *Forbearance from Telecommunications Service Obligations.* The U.S. District Court for the Southern District of California has expressed the view that it is bound by the Ninth Circuit's decision in *AT&T* v. *City of Portland* that cable modem service is a telecommunications service. The Ninth Circuit had left open the question as to whether the Commission could forbear from particular Title II obligations under Section 10 of the Communications Act. To the extent that cable modem service may be subject to telecommunications service classification, the NPRM seeks comment on whether the Commission should forbear from applying each provision of Title II or common carrier regulation. The NPRM invites comment on whether enforcement of such provisions is not necessary to ensure that the charges, practices, classification or regulations in connection with cable modem service are just and reasonable and not unjustly or unreasonably discriminatory. Is enforcement not necessary for the protection of consumers? Would forbearance be consistent with the public interest? The NPRM tentatively

concludes that such forbearance would be justified. Given that cable modem service will be treated as an information service in most of the country, the Commission tentatively concludes that the public interest would be served by the uniform national policy that would result from the exercise of forbearance to the extent that cable modem service is classified as a telecommunications service. The Commission states its belief that forbearance would be in the public interest because cable modem service is still in its early stage; supply and demand are still evolving; and several rival networks providing residential high-speed Internet access are still evolving. Thus, the Commission tentatively concludes that enforcement of Title II provisions and common carrier regulation is not necessary for the protection of consumers or to ensure that rates are just and reasonable and not unjustly discriminatory. The Commission states its belief that forbearance from Title II and common carrier regulation is appropriate under the circumstances. The NPRM requests comment on this conclusion and the underlying analysis, and asks that commenters focus on how such forbearance and/or regulation would further the Commission's goals.

Consequences of Legal Classification as Information Service

18. State and Local Regulation of Cable Modem Service and Rights-of-Way. The NPRM seeks comment whether the Commission should interpret its assertion of jurisdiction over cable modem service under the Communications Act to preclude State and local authorities from regulating cable modem service and facilities in particular ways. The NPRM notes that the courts have recognized the Commission's authority under Title I to preempt non-Federal regulations that negate the Commission's goals, including regulations affecting enhanced services. The NPRM seeks comment as to any additional basis for preempting such regulations, including, for example, section 624(b) of the Communications Act.

19. In addition to the access requirements, franchise requirements, and franchise fees discussed below, the NPRM seeks comment on any other forms of State and local regulation that would limit the Commission's ability to achieve its national broadband policy, discourage investment in advanced communications facilities, or create an unpredictable regulatory environment. Specifically, the NPRM seeks comment as to whether the Commission should use its preemption authority to preempt specific State laws or local regulations. It asks commenters to specify what preemption authority the Commission would rely on in each case.

20. *Access Requirements.* The NPRM seeks comment on any regulatory authority that State and local governments may have with respect to cable modem service as an information service, including any authority to impose multiple ISP access requirements or to prohibit, limit, restrict, or condition the provision of cable modem service. Is such regulation consistent with any exercise of the Commission's jurisdiction over cable modem service under Title I, including any affirmative decision the Commission might make to refrain from imposing specific regulatory requirements?

21. *Rights-of-Way and Franchising Issues.* The NPRM asks for comment on how the classification of cable modem service as an interstate information service impacts State and local regulation of rights-of-way and franchising. The NPRM tentatively concludes that once a cable operator has obtained a franchise for a cable system, the Commission's information service classification should not affect the right of cable operators to access rights-of-way as necessary to provide cable modem service or to use their previously franchised systems to provide cable modem service. The NPRM seeks comment on this tentative conclusion. It also seeks comment on whether providing additional services over upgraded cable facilities imposes additional burdens on the public rights-of-way such that the existing franchise process is inadequate. If so, the NPRM asks whether Title VI nevertheless precludes local franchising authorities from imposing additional requirements on cable modem service. The NPRM tentatively concludes that Title VI does not provide a basis for a local franchising authority to impose an additional franchise on a cable operator that provides cable modem service.

22. The NPRM also seeks comment generally on the scope of local franchising authority over facilities-based providers of information services. Do State statutes and Constitutional provisions authorizing local franchising in terms of utility services generally, or cable and telecommunications networks and services specifically, authorize localities to franchise providers of information service under existing law? If so, is there any basis for treating facilities-based providers of information services differently based on the facilities used? The NPRM expresses concern that State or local regulation beyond that necessary to manage rights-of-way could impede competition and impose unnecessary delays and costs on the development of new broadband services. It notes questions about potential State and local actions that could restrict entry, impose access or other requirements on cable modem service, or assess fees or taxes on cable Internet service. It seeks comment on these issues.

23. In the NPRM, the Commission tentatively concludes that Title VI of the 1934 Act does not provide an independent basis of authority for assessing franchise fees on cable modem service. The NPRM seeks comment on this issue.

24. *Franchise Fees Previously Paid Pursuant to Section 622.* The NPRM also notes that some cable operators, believing they were legitimately carrying out their obligations and rights under Title VI of the 1934 Act and local franchise agreements, collected franchise fees based on cable modem service revenues, identified these fees on subscriber bills, and remitted these franchise fees to local franchising authorities pursuant to the terms of their franchising agreements. After the Ninth Circuit's decision in *AT&T* v. *Portland,* some cable operators suspended collecting and remitting franchise fees for revenues from cable modem service in Ninth Circuit States out of concern about their exposure to significant litigation risk if they were to continue collecting a franchise fee on cable modem service. Subscribers in other states are understood to have raised the issue of whether franchise fees were lawfully collected from them and whether the fees collected should be refunded. The NPRM seeks comment on whether disputes regarding franchise fees based on cable modem service implicate a national policy concerning communications that calls upon Commission expertise, given that the fees in question were collected pursuant to the Communications Act and that the Commission's classification decision will alter, on a national scale, the regulatory treatment of cable modem service. The NPRM seeks comment on whether it is appropriate for the Commission to exercise its jurisdiction under section 622 of the Communications Act to resolve the issue of previously collected franchise fees based on cable modem service revenues or whether these issues are more appropriately resolved by the courts.

25. *Consumer Protection and Customer Service.* The NPRM also seeks comment on how the Commission's information service classification may

affect other aspects of State or local regulation, such as consumer protection and customer service standards regarding cable modem service. The NPRM asks whether the authority conferred on franchising authorities by section 632(a) of the Communications Act to establish and enforce customer service requirements applies to cable modem service provided by a cable operator. Do the provisions in section 632(d), stating that nothing in Title VI ''shall be construed to prohibit any State or any franchising authority from enacting or enforcing any consumer protection law, to the extent not specifically preempted by [Title VI],'' or ''to prevent the establishment or enforcement'' of customer service laws or regulations that exceed Commission standards or address matters not addressed by Commission standards under section 632, apply to cable modem service?

26. *Protection of Subscriber Privacy.* Section 631 of the Communications Act addresses privacy for subscribers to ''any cable service or other service'' provided by a cable operator. The NPRM states that the Commission interprets cable modem service to be an ''other service.'' The NPRM seeks comment on this interpretation. And, although section 631's terms are enforced by the courts, and not by the Commission, the NPRM seeks comment as to how the privacy requirements of section 631 affect providers of cable modem service.

Initial Regulatory Flexibility Analysis

27. As required by the Regulatory Flexibility Act of 1980, 5 U.S.C. 601 *et seq.* as amended (''RFA''), the Commission has prepared an Initial Regulatory Flexibility Analysis (''IRFA'') of the possible significant economic impact on a substantial number of small entities by the policies and rules considered in the NPRM. Written public comments are requested on this IRFA. Comments must be identified as responses to this IRFA and must be filed by the deadlines for comments on the NPRM provided in paragraph 41 of this NPRM. The Commission will send a copy of the NPRM, including this IRFA, to the Chief Counsel for Advocacy of the Small Business Administration (''SBA'').

28. Need for, and Objectives of, the Proposed Rules. With our declaratory ruling herein, we have sought to provide regulatory certainty for the emerging cable modem service industry by resolving a nationwide controversy concerning the proper regulatory classification of cable modem service under federal law. In doing so, we recognize that there are a number of related issues that may need resolution in the form of federal rules. By this Notice of Proposed Rulemaking, we seek comment on certain issues related to the practical implementation of our classification of cable modem service as an information service.

29. Legal Basis. The authority for the action proposed in this rulemaking is contained in sections 1, 2(a), 3, 4(i), 4(j), 303, and 601 of the Communications Act of 1934, as amended, 47 U.S.C. 151, 152(a), 153, 154(i), 154(j), 303, and 521, and Section 706 of the Telecommunications Act of 1996, 47 U.S.C. 157 nt.

30. Description and Estimate of the Number of Small Entities to Which the Proposed Rules Will Apply. The RFA, 5 U.S.C. 603(b)(3), directs agencies to provide a description of, and where feasible, an estimate of the number of small entities that may be affected by the proposed rules, if adopted. The RFA, 5 U.S.C. 601(6), generally defines the term ''small entity'' as having the same meaning as the terms ''small business,'' ''small organization,'' and ''small governmental jurisdiction.'' In addition, the term ''small business'' has the same meaning as the term ''small business concern'' under the Small Business Act, 5 U.S.C. 601(3) (incorporating by reference the definition of ''small business concern'' in the Small Business Act, 15 U.S.C. 632). Under 15 U.S.C. 632, a ''small business concern'' is one which: (1) Is independently owned and operated; (2) is not dominant in its field of operation; and (3) satisfies any additional criteria established by the SBA.

31. The SBA has developed a small business size standard, 13 CFR 121.201, North American Industry Classification System (''NAICS'') code 513220, for cable and other program distribution,'' which includes all such companies generating $11 million or less in revenue annually. This category includes, among others, cable operators, closed circuit television services, direct broadcast satellite services, multipoint distribution services, open video systems (''OVS''), satellite master antenna television (''SMATV'') systems, and subscription television services. According to the Census Bureau data from 1992, there were 1,788 total cable and other pay television services and 1,423 had less than $11 million in revenue. The Commission addresses cable operators and OVS operators below to provide a more precise estimate of the affected small entities. The Commission does not believe that the other pay television services would be affected by the proposals in the NPRM.

32. *Cable Systems.* The Commission has developed its own small business size standard for a small cable operator for the purposes of rate regulation. Under the Commission's rules, 47 CFR 76.901(e), a ''small cable company'' is one serving fewer than 400,000 subscribers nationwide. Based on Commission's most recent information, it estimates that there were 1,439 cable operators that qualified as small cable companies at the end of 1995. Since then, some of those companies may have grown to serve over 400,000 subscribers, and others may have been involved in transactions that caused them to be combined with other cable operators. Consequently, the Commission estimates that there are fewer than 1,439 small cable companies that may be affected by the NPRM.

33. The Communications Act of 1934, 47 U.S.C. 543(m)(2) as amended, also contains a size standard for a ''small cable operator,'' which is ''a cable operator that, directly or through an affiliate, serves in the aggregate fewer than one percent of all subscribers in the United States and is not affiliated with any entity or entities whose gross annual revenues in the aggregate exceed $250,000,000.'' The Commission has determined that there are 67,700,000 subscribers in the United States. Therefore, an operator serving fewer than 677,000 subscribers shall be deemed a small operator, if its annual revenues, when combined with the total annual revenues of all of its affiliates, do not exceed $250 million in the aggregate. See 47 CFR 76.1403(b). Based on available data, the Commission estimates that the number of cable operators serving 677,000 subscribers or less totals approximately 1,450. The Commission does not request or collect information on whether cable operators are affiliated with entities whose gross annual revenues exceed $250,000,000, and therefore is unable to estimate accurately the number of cable system operators that would qualify as small cable operators under the definition in the Communications Act.

34. *Open Video Systems (''OVS'').* Because OVS operators provide subscription services, as specified in 47 U.S.C. 573, OVS falls within the SBA-recognized definition of ''Cable and Other Program Distribution,'' 13 CFR 121.201, NAICS Codes 51321 and 51322. This standard provides that a small entity is one with $11 million or less in annual receipts. The Commission has certified approximately 25 OVS operators to serve 75 areas, and some of those are currently providing service.

Affiliates of Residential Communications Network, Inc. (''RCN'') received approval to operate OVS systems in New York City, Boston, Washington, D.C. and other areas. RCN has sufficient revenues to assure the Commission that they do not qualify as small business entities. Little financial information is available for the other entities authorized to provide OVS that are not yet operational. Given that other entities have been authorized to provide OVS service but have not yet begun to generate revenues, the Commission concludes that at least some of the OVS operators qualify as small entities.

35. Description of Projected Reporting, Recordkeeping and Other Compliance Requirements. The NPRM seeks comment on the regulatory implications of the Commission's finding that cable modem service is an information service under the Communications Act, 47 U.S.C. 153(20) as amended. Specifically, the NPRM seeks comment on whether the Commission should require cable operators that provide cable modem service to allow unaffiliated ISPs to have direct access to the cable operator's subscribers via the cable system facilities.

36. The NPRM also seeks comment on the scope of state and local government authority over cable modem service in light of the Commission's finding that it is an information service. This determination may not have a direct effect on small entities, but indirectly it may impact small entities, such as small cable operators, if local governments are permitted to require cable operators to grant unaffiliated ISPs access to the cable system or if local governments are permitted to enforce other regulations that affect a cable operator's provision of cable modem service.

37. Steps Taken to Minimize Significant Impact on Small Entities and Significant Alternatives Considered. The IRFA requires an agency to describe any significant alternatives that it has considered in proposing regulatory approaches, which may include, among others, the following four alternatives: (1) The establishment of differing compliance or reporting requirements or timetables that take into account the resources available to small entities; (2) the clarification, consolidation, or simplification of compliance or reporting requirements under the rule for small entities; (3) the use of performance, rather than design, standards; and (4) an exemption from coverage of the rule, or any part thereof, for small entities.

38. The NPRM seeks comment on several regulatory alternatives to implement the Commission's classification of cable modem service as an information service under the Communications Act. For example, alternatives considered in the NPRM include whether unaffiliated ISPs should be provided with access to cable systems and, if so, which of the various access models should be adopted. In addition, the Commission will also consider whether any access requirements ultimately adopted should be different for large cable operators from those imposed on small cable operators. Finally, the NPRM considers whether the Commission should refrain entirely from imposing any ISP access requirements on cable operators. The Commission expects that whichever alternatives are chosen the Commission will seek to minimize any adverse effects on small entities.

39. Federal Rules Which Duplicate, Overlap, or Conflict with the Commission's Proposals. None.

Procedural Matters

Ex Parte

40. This proceeding will be treated as a ''permit-but-disclose'' proceeding subject to the ''permit-but-disclose'' requirements under § 1.1206(b) of the Commission's rules, 47 CFR 1.1206(b), as revised. Ex parte presentations are permissible if disclosed in accordance with Commission rules, except during the Sunshine Agenda period when presentations, ex parte or otherwise, are generally prohibited. Persons making oral ex parte presentations are reminded that a memorandum summarizing a presentation must contain a summary of the substance of the presentation and not merely a listing of the subjects discussed. More than a one or two sentence description of the views and arguments presented is generally required. *See* 47 CFR 1.1206(b)(2), as revised. Additional rules pertaining to oral and written presentations are set forth in § 1.1206(b) of the Commission's rules, 47 CFR 1.1206(b), as revised. Parties submitting written ex parte presentations or summaries of oral ex parte presentations are urged to use the Electronic Comment Filing System (''ECFS'') in accordance with the Commission rules discussed below. Parties filing paper ex parte submissions must file an original and one copy of each submission with the Commission's Acting Secretary, William F. Caton, at the appropriate address below (see Filing of Comments and Reply Comments) for filings sent by either U.S. mail, overnight delivery, or hand or messenger delivery. Parties must also serve the following with either one copy of each ex parte filing via e-mail or two paper copies: (1) Qualex International, Portals II, 445 12th Street, SW., Room CY–B402, Washington, DC, 20554, telephone (202) 863–2893, facsimile (202) 863–2898, or e-mail at *qualexint@aol.com;* and (2) Sarah Whitesell, Media Bureau, 445 12th Street, SW., 3–C488, Washington, DC, 20554, *swhitese@fcc.gov;* and (3) Steve Garner, Media Bureau, 445 12th Street, SW., 4–C468, Washington, DC 20554, *sgarner@fcc.gov.*

Filing of Comments and Reply Comments

41. Pursuant to applicable procedures set forth in §§ 1.415 and 1.419 of the Commission's rules, interested parties may file comments on or before June 17, 2002, and reply comments on or before July 15, 2002. Comments may be filed using the Commission's Electronic Comment Filing System (''ECFS'') or by filing paper copies. *See Electronic Filing of Documents in Rulemaking Proceedings,* 63 FR 24121 (1998). Given recent changes in the Commission's mail delivery system, parties are strongly urged to use the ECFS to file their pleadings. Comments filed through the ECFS can be sent as an electronic file via the Internet to <*http://www.fcc.gov/e-file/ecfs.html*>. Generally, only one copy of an electronic submission must be filed. In completing the transmittal screen, electronic filers should include their full name, Postal Service mailing address, and the applicable docket or rulemaking number. Parties may also submit an electronic comment by Internet e-mail. To get filing instructions for e-mail comments, commenters should send an e-mail to *ecfs@fcc.gov,* and should include the following words in the body of the message, ''get form <your e-mail address>.'' A sample form and directions will be sent in reply.

42. Parties who choose to file by paper must file an original and four copies of each filing in CS Docket No. 02–52. If parties want each Commissioner to receive a personal copy of their comments, an original plus nine copies must be filed. Filings can be sent by hand or messenger delivery, by commercial overnight courier, or by first-class or overnight U.S. Postal Service mail (although we continue to experience delays in receiving U.S. Postal Service mail). The Commission's contractor, Vistronix, Inc., will receive hand-delivered or messenger-delivered paper filings for the Commission's Secretary at 236 Massachusetts Avenue, NE., Suite 110, Washington, DC 20002. The filing hours at this location are 8 a.m. to 7 p.m. All hand deliveries must

be held together with rubber bands or fasteners. Any envelopes must be disposed of before entering the building. Commercial overnight mail (other than U.S. Postal Service Express Mail and Priority Mail) must be sent to 9300 East Hampton Drive, Capitol Heights, MD 20743. U.S. Postal Service first-class mail, Express Mail, and Priority Mail should be addressed to 445 12th Street, SW., Washington, DC 20554. All filings must be addressed to the Commission's Secretary, Office of the Secretary, Federal Communications Commission. Parties must also serve the following with either one copy of each filing via e-mail or two paper copies: (1) Qualex International, Portals II, 445 12th Street, SW., Room CY–B402, Washington, DC 20554, telephone (202) 863–2893, facsimile (202) 863–2898, or e-mail at *qualexint@aol.com;* and (2) Sarah Whitesell, Media Bureau, 445 12th Street, SW., 3–C488, Washington, DC 20554, *swhitese@fcc.gov.* In addition, five copies of each filing must be filed with Steve Garner, Media Bureau, 445 12th Street, SW., 4–C468, Washington, DC 20554, *sgarner@fcc.gov.*

Availability of Documents

43. Comments, reply comments, and *ex parte* submissions will be available for public inspection during regular business hours in the FCC Reference Center, Federal Communications Commission, 445 12th Street, SW., CY–A257, Washington, DC 20554. Persons with disabilities who need assistance in the FCC Reference Center may contact Bill Cline at (202) 418–0267, (202) 418–7365 TTY, or *bcline@fcc.gov.* These documents also will be available electronically at the Commission's Disabilities Issues Task Force Web site: *www.fcc.gov/dtf,* and from the Commission's Electronic Comment Filing System. Documents are available electronically in ASCII text, Word 97, and Adobe Acrobat. Copies of filings in this proceeding may be obtained from Qualex International, Portals II, 445 12th Street, SW., Room, CY–B402, Washington, DC 20554, telephone (202) 863–2893, facsimile (202) 863–2898, or via e-mail at *qualexint@aol.com.*

44. This document is available in alternative formats (computer diskette, large print, audio cassette, and Braille). Persons who need documents in such formats may contact Brian Millin at (202) 418–7426, TTY (202) 418–7365, or send an e-mail to *access@fcc.gov.*

Contact Information

45. The Media Bureau contact for this proceeding is Steve Garner at (202) 418–1063, *sgarner@fcc.gov.*

Ordering Clause

46. This Notice of Proposed Rulemaking is issued pursuant to authority contained in sections 1, 2, 3, 4, 303, 403, and 601 of the Communications Act of 1934, as amended, and section 706 of the Telecommunications Act of 1996.

Federal Communications Commission.

William F. Caton,

Acting Secretary.

[FR Doc. 02–9102 Filed 4–16–02; 8:45 am]

BILLING CODE 6712–01–P

Notices

Federal Register
Vol. 67, No. 74
Wednesday, April 17, 2002

This section of the FEDERAL REGISTER contains documents other than rules or proposed rules that are applicable to the public. Notices of hearings and investigations, committee meetings, agency decisions and rulings, delegations of authority, filing of petitions and applications and agency statements of organization and functions are examples of documents appearing in this section.

DEPARTMENT OF AGRICULTURE

Office of the Secretary

Notice of Request for Extension of a Currently Approved Information Collection

AGENCY: Department of Agriculture.

ACTION: Notice.

SUMMARY: In accordance with the Paperwork Reduction Act of 1995, Chapter 35, Title 44 of the United States Code, this notice announces the Department of Agriculture's intention to request an extension on the currently approved information collection in support of debt collection.

DATES: Comments on this notice must be received by June 17, 2002, to be assured of consideration.

ADDRESSES: Address all comments concerning this notice to Dale Theurer, Credit, Travel and Accounting Policy, Office of the Chief Financial Officer, USDA, Room 4628 South Building, 1400 Independence Avenue, SW, Washington, DC 20250.

FOR FURTHER INFORMATION CONTACT: Joyce Baumgartner on 202–720–4958, FAX 202–690–1529, e-mail to *jbaumgartner@cfo.usda.gov.*

SUPPLEMENTARY INFORMATION: The Debt Collection Act of 1982, Public Law 97–365, 96 Stat. 1749, as amended by Public Law 98–167, 97 Stat. 1104, and the Debt Collection Improvement Act of 1996, Public Law 104–134, requires that any monies that are payable or may become payable from the United States under contracts and other written agreements to any persons or a legal entity not an agency or subdivision of a State or local government may be subject to administrative offset for the collection of a delinquent debt the person or legal entity owes to the United States.

Title: Debt Collection.

OMB Number: 0505–0007.

Expiration Date of Approval: June 28, 2002.

Type of Request: Extension on currently approved information collection.

Abstract: 31 U.S.C. 3716, which was enacted as part of the Debt Collection Act, authorizes the collection of debts by administrative offset, and the Debt Collection Improvement Act of 1996 expanded the application of administrative offset to every instance except where a statute explicitly prohibits the use of administrative offset for collection purposes. Protection is provided to debtors by requiring that an individual debtor be given notice of a debt. The notice provides information to delinquent debtors targeted for administrative offset who want additional information, desire to enter into repayment agreements, or desire to request a review of an agency's determination to offset. Creditor agencies use the collected information to respond and/or to take appropriate action. If the relevant information is not collected, the creditor agencies cannot comply with the due process provision of the Debt Collection Act and the Debt Collection Improvement Act. Collection of information only affects delinquent debtors.

Estimate of Burden: A public reporting and record keeping burden for this collection of information is estimated to average 1 hour per response.

Respondents: Delinquent debtors.

Estimated Number of Respondents: 37,710.

Estimated Number of Responses per Respondent: 2.

Estimated Total Annual Burden on Respondents: 75,420 hours.

All responses to this notice will be summarized and included in the request for Office of Management and Budget approval. All comments will also become a matter of public record.

Dated: April 11, 2002.

Edward McPherson,

Chief Financial Officer.

[FR Doc. 02–9257 Filed 4–16–02; 8:45 am]

BILLING CODE 3410–KS–P

DEPARTMENT OF AGRICULTURE

Food Safety and Inspection Service

[Docket No. 02–012N]

Codex Alimentarius Commission: Meeting of the Codex ad hoc Intergovernmental Task Force on Animal Feeding

AGENCY: Office of the Under Secretary for Food Safety, USDA.

ACTION: Notice of public meeting, request for comments.

SUMMARY: The Office of the Under Secretary for Food Safety, United States Department of Agriculture (USDA), the Center for Veterinary Medicine (CVM), and the Food and Drug Administration (FDA), are sponsoring a public meeting on Tuesday June 4, 2002, to provide information and receive public comments on agenda items that will be discussed at the Second Session of the Codex ad hoc Intergovernmental Task Force on Animal Feeding, which will be held in Copenhagen, Denmark, June 17–20, 2002. The Under Secretary and the Director of CVM recognize the importance of providing interested parties the opportunity to obtain information about the Intergovernmental Task Force on Animal Feeding of the Codex Alimentarius Commission and to address items on the Agenda for the 3rd Session of the Task Force.

DATES: The public meeting is scheduled for Tuesday, June 4, 2002, from 9:30 a.m. to 12:30 p.m.

ADDRESSES: The public meeting will be held in Room 0161 South Agricultural Building, U.S. Department of Agriculture, 1400 Independence Avenue, SW, Washington, DC 20250 (Metro Stop: Smithsonian on the blue and orange line). To receive copies of the documents referenced in the notice contact the FSIS Docket Room, U.S. Department of Agriculture, Food Safety and Inspection Service, Room 102, Cotton Annex, 300 12th Street, SW, Washington, DC 20250–3700. The documents will also be accessible via the World Wide Web at the following address: *http://www.codexalimentarius.net* under Provisional Agendas. If you have comments, please send an original and two copies to the FSIS Docket Room and reference Docket #02–012N and the

document number. All comments submitted will be available for public inspection in the FSIS Docket Room between 8:30 a.m. and 4:30 p.m., Monday through Friday.

FOR FURTHER INFORMATION CONTACT: Edith Kennard, Staff Officer, U.S. Codex Office, Food Safety and Inspection Service, Room 4861, South Building, 1400 Independence Avenue SW, Washington, DC 20250, Phone: (202) 205–7760, Fax: (202) 720–3157. Persons requiring a sign language interpreter or other special accommodations should notify Edith Kennard at the above telephone number.

SUPPLEMENTARY INFORMATION:

Background

The Codex Alimentarius Commission was established in 1962 by two United Nations organizations, the Food and Agriculture Organization (FAO) and the World Health Organization (WHO). Codex is the major international organization for encouraging fair international trade in food and protecting the health and economic interests of consumers. Through adoption of food standards, codes of practice, and other guidelines developed by its committees, and by promoting their adoption and implementation by governments, Codex seeks to ensure that the world's food supply is sound, wholesome, free from adulteration, and correctly labeled. In the United States, USDA, FDA, and EPA manage and carry out U.S. Codex.

The Codex ad hoc Intergovernmental Codex Task Force on Animal Feeding was established by the 23rd Session of the Codex Alimentarius Commission to develop Guidelines or Standards as appropriate on Good Animal Feeding practices with the aim of ensuring safety and quality of foods of animal origin. The ad hoc Task Force is chaired by Denmark.

Issues To Be Discussed at the Public Meeting

Provisional agenda items to be discussed during the public meeting:

—Additional Information on lists established by different governments to control the use of prohibited and undesirable substances in animal feedingstuffs or other approaches

—Information paper on Establishment of Codex maximum levels and residue limits for feedingstuffs and foods

—Consideration of the Revised Draft Code of Practice on Good Animal Feeding

—Consideration of Section 6 ''On-Farm Production and Use of Feedingstuffs''

Public Meeting

At the June 4th public meeting, the agenda items will be described, discussed, and attendees will have the opportunity to pose questions and offer comments. Comments may be sent to the FSIS Docket Room (see **ADDRESSES**). Written comments should state that they relate to activities of the 3rd ad hoc Task Force on Animal Feeding.

Additional Public Notification

Public awareness of all segments of rulemaking and policy development is important. Consequently, in an effort to better ensure that minorities, women, and persons with disabilities are aware of this notice, FSIS will announce it and provide copies of this **Federal Register** publication in the FSIS Constituent Update. FSIS provides a weekly Constituent Update, which is communicated via fax to over 300 organizations and individuals. In addition, the update is available on-line through the FSIS web page located at *http://www.fsis.usda.gov.* The update is used to provide information regarding FSIS policies, procedures, regulations, **Federal Register** notices, FSIS public meetings, recalls, and any other types of information that could effect or would be of interest to our constituents/stakeholders. The constituent fax list consists of industry, trade, and farm groups, consumer interest groups, allied health professionals, scientific professionals, and other individuals that have requested to be included. Through these various channels, FSIS is able to provide information to a much broader, more diverse audience.

For more information and to be added to the constituent fax list, fax your request to the Congressional and Public Affairs Office, at (202) 720–5704.

Done at Washington, DC, on: April 10, 2002.

F. Edward Scarbrough,

U.S. Manager for Codex Alimentarius.

[FR Doc. 02–9361 Filed 4–16–02; 8:45 am]

BILLING CODE 3410–DM–P

DEPARTMENT OF AGRICULTURE

Forest Service

Amendment to the Coconino Forest Plan for the Flagstaff/Lake Mary Ecosystem Analysis Area—EIS; Southwestern Region, Arizona, Coconino County, Coconino National Forest

AGENCY: Forest Service, USDA.

ACTION: Notice of intent to prepare an Environmental Impact Statement.

SUMMARY: The Coconino National Forest is planning to prepare an Environmental Impact Statement on a proposal to amend the Coconino Forest Plan. This amendment provides clarification to current Forest Plan language and adds additional direction for management of lands surrounding the City of Flagstaff, the Flagstaff Area National Monuments and the Lake Mary Watershed. A Proposed Action is located on the Coconino National Forest website at *http://www.fs.fed.us/r3/coconino/nepa.shtml.*

DATES: Comments in response to this Notice of Intent concerning the scope of the analysis should be received in writing on or before 30 days after publication of this notice in the **Federal Register**.

ADDRESSES: Send written comments to USDA Forest Service, Coconino National Forest, 2323 E Greenlaw Lane, Flagstaff, AZ 86004. Electronic mail may be sent to *dkill@fs.fed.us.*

RESPONSIBLE OFFICIAL: The Forest Supervisor of the Coconino National Forest, Supervisor's Office, 2323 E. Greenlaw Lane, Flagstaff AZ 86004, will decide what actions are most appropriate for the Amendment to the Coconino Forest Plan for the Flagstaff/Lake Mary Ecosystem Analysis Area.

FOR FURTHER INFORMATION CONTACT: Debbie Kill or Alvin Brown, 928–526–0866, 5075 Highway 89, Flagstaff, AZ 86004, *dkill@fs.fed.us* or *abrown@fs.fed.us*

SUPPLEMENTARY INFORMATION: The Proposed Action adds an emphasis on fire risk reduction and recreation management for lands in close proximity to residential areas. There are proposed objectives for recreation settings (including recommendations for motorized versus nonmotorizied settings) based on landscape analysis and design. Recreation settings provide a framework for future site-specific planning and decision making for outfitter/guide and group uses, road management, and camping. There is new rock climbing direction proposed. There are proposed adjustments to wildlife cover and a redistribution of Mexican spotted owl habitat near residential areas. Items such as scenery, noxious weeds, land exchange, watershed, mountain meadows and riparian areas have added language for clarification and emphasis. There is proposed language that references continued cooperation and coordination with local, State, and Federal agencies. New Management Areas are delineated with additional emphasis items and direction. Management Areas were

created based on unique land features, biophysical characteristics, and/or the lands relationship to adjacent communities. All proposed amendment language is in addition to all the current Forest Plan direction.

The past and proposed scoping process for this project is as follows. In May of 1999 the *Ideas for change* was published that described the need for considering changes and a variety of ideas and as a formal scoping document. The public responded by attending open houses, writing letters, and e-mails or attending topic-oriented meetings. Further analysis refined the scope of the FLEA analysis and the Proposed Action was published in September of 2001. The Proposed Action contains the actual replacement page language proposed for the Forest Plan. The replacement language consists of clarification, new language on topics where the Forest Plan was previously silent and management direction changes. One open house was held in September 2001 for the Proposed Action. For the Draft Environmental Impact Statement (DEIS) there is one public presentation planned in late May or June, for a joint meeting of the Coconino County Board of Supervisors and the Flagstaff City Council. Date and location will be arranged later. No additional public meetings are scheduled at this time, however, the public is welcome to request presentations of information, obtain a copy of the DEIS and write or e-mail in their comments.

Issues include disagreement with the Proposed Action related to Recreation Opportunity Settings at certain sites, and requirements for big game hiding/thermal cover in areas of fire risk concern.

Four alternatives have been developed that include a different mix of forest settings and wildlife cover requirements.

No permits or licenses are required.

This Forest Plan amendment will be referenced during project-level analysis and decision-making. Implementation of the desired condition described in the Forest Plan, including this amendment, will occur over a period of years.

The estimated date for availability of the DEIS is May 2002. The estimated date for filing the Final Environmental Impact Statement is September 2002.

Comments may be sent by electronic mail (e-mail) to *dkill@fs.fed.us* Please reference the FLEA EIS on the subject line. Please include your name and physical mailing address with your comments so documents pertaining to this project may be mailed to you.

The Forest Service believes, at this early stage, it is important to give reviewers notice of several court rulings related to public participation in the environmental review process. To be the most helpful, comments on the draft environmental impact statement should be as specific as possible and may address the adequacy of the statement or the merits of the alternatives discussed (see Council of Environmental Quality Regulations for implementing the procedural provisions of the National Environmental Policy Act at 40 CFR 1503.3).

In addition, Federal court decisions have established that reviewers of draft environmental impact statements must structure their participation in the environmental review of the proposal so that it is meaningful and alerts an agency to the reviewers' position and contentions. *Vermont Yankee Nuclear Power Corp.* v. *NRDC* 435 US 519, 553 (1978). Environmental objections that could have been raised at the draft stage may be waived if not raised until after completion of the final environmental impact statement. *City of Angoon* v. *Hodel* 9th Circuit, 1986 and *Wisconsin Heritages, Inc.* v. *Harris*, 490F. Supp.1334, 1338 (E.D. Wis. 1980). The reason for this is to ensure that substantive comments and objections are made available to the Forest Service at a time when it can meaningfully consider them in the final environmental impact statement.

To assist the Forest Service in identifying and considering issues and concerns on the proposed action, comments on the DEIS should be as specific as possible. It is also helpful if comments refer to specific pages or chapters of the draft statement. Comments may also address the adequacy of the draft environmental impact statement or the merits of the alternatives formulated and discussed in the statement. Reviewers may wish to refer to the Council on Environmental Quality Regulations for implementing the procedural provisions of the National Environmental Policy Act at 40 CFR 1503.3 in addressing these points.

Dated: April 11, 2002.

Rodger Zanotto,

Acting Forest Supervisor.

[FR Doc. 02–9268 Filed 4–16–02; 8:45 am]

BILLING CODE 3410–11–M

DEPARTMENT OF AGRICULTURE

Forest Service

Woronkofski Environmental Impact Statement

AGENCY: Forest Service, USDA.

ACTION: Revision of the notice of intent to prepare an environmental impact statement.

SUMMARY: The previous notice published in the Federal Register (Vol. 65, No. 183, pgs. 56864–56865, Sept. 20, 2000) is revised to update the estimated filing dates of the draft and final environmental impact statements, and include changes in the proposed action and purposes and need. The Department of Agriculture, Forest Service, will prepare an Environmental Impact Statement (EIS) on a proposal to harvest timber in the Woronkofski Timber Sale project area, Wrangell Ranger District, Tongass National Forest. The proposed action is to harvest an estimated 10 million board feet (mmbf) on approximately 1000 acres, with 2 miles of road construction and 2 miles of reconstruction, and development of two new log transfer facilities. The range of alternatives being developed to respond to the significant issues, besides no action, will likely be 5–15 million board feet of timber on an estimated 700–1500 acres in one or more timber sales. The purpose and need of the timber sale is to: contribute to the production of a sustained yield of timber and mix of other resource activities from the Tongass National Forest, consistent with Forest Plan Standards and Guidelines; seek to provide a timber supply sufficient to meet the annual and planning cycle market demand for Tongass National Forest timber; provide a diversity of opportunities for resource uses that contribute to the economies of Southeast Alaska; and support a wide range of natural resource employment opportunities within Southeast Alaska's communities. The Tongass Forest Supervisor will decide on whether or not to harvest timber from this area, and if so, how this timber would be harvested. The decision will be documented in a Record of Decision based on the information disclosed in the EIS and the goals, objectives and desired future conditions as stated in the Forest Plan.

DATES: Opportunities for comment are available throughout the process. Individuals interested in receiving a scoping package should contact us within 30 days of the publication of this NOI. Comments will be most helpful if received by 3/31/02. Additional opportunities for comment will be provided after the release of the Draft EIS, projected to be in the summer of 2002.

ADDRESSES: Please send written comments to Wrangell Ranger District;

Attn: Woronkofski EIS; PO Box 51, Wrangell, AK 99929.

FOR FURTHER INFORMATION CONTACT: Chip Weber, District Ranger; Randy Hojem, District Planning Staff; or Dee Galla, IDT Leader; Wrangell Ranger District, Tongass National Forest, PO Box 51, Wrangell, AK 99929 telephone (907) 874–2323.

SUPPLEMENTARY INFORMATION: This revised notice is required by the Forest Service handbook (FSH 1909.15, 21.2). The proposed timber harvest is located within Tongass Forest Plan Value Comparison Unit 461 on Woronkofski Island, Alaska, Wrangell Ranger District of the Tongass National Forest. Approximately 95% of proposed sale units are located within the Woronkofski Inventoried Roadless Area. The Forest Service is reevaluating its Roadless Area Conservation Rule (Roadless Rule) and is currently enjoined from implementing all aspects of the Roadless Rule by the US District Court, District of Idaho. In 2001, the Secretary of Agriculture began a review of the roadless area rule and the Chief of the Forest Service undertook a review of the road management policy. These reviews have led the agency to initiate several Interim Directives with the intent that the values associated with inventoried roadless areas are fully considered within the context of forest planning. In Sierra Club v. Lyons (J00–0009 (CV)), the US District Court, District of Alaska enjoined the Tongass National Forest from taking any action to change the wilderness character of any eligible roadless area until a supplemental environmental impact statement (SEIS) has been completed. The injunction was lifted and the Forest Service is currently preparing the SEIS to address wilderness recommendations. Planning for the Woronkofski Timber Sale Project will continue simultaneously and in coordination with the SEIS and meet the requirements in the Interim Directives. The sale is currently listed on the Tongass 10-year action plan to be sold in 2005. The repercussions of delaying the project planning process regarding road building and timber harvest, even for a relatively short period, can have a significant effect on the amount of timber available for sale on the Tongass over the next few years. The Woronkofski Timber Sale Project is consistent with the 1997 Tongass Land Management Plan.

Public participation has been and will continue to be an integral component of the study process and will be especially important at several points during the analysis. The first occurred during the initial scoping process conducted in the Spring of 1999. That was followed up with a second scoping package sent out with the original Notice of Intent for this project, published in the **Federal Register** (Vol. 65, No. 183, pgs. 56864–56865, Sept. 20, 2000). The Forest Service sought and received information, comments, and assistance from Federal, State, local agencies, Tribal Governments, individuals and organizations that expressed an interest in, or felt they may be affected by, the proposed activities. The Fall 2000 scoping package included: (1) Identification of potential issues; (2) identification of issues to be analyzed in depth; and (3) identification of preliminary alternatives. Tentative issues identified for analysis in the EIS include the potential effects of the project on the relationship of the project to: scenic quality, wildlife habitat, project economics, and effects on the roadless area. People interested in obtaining the scoping package sent out in the Fall of 2000 may contact Dee Galla, IDT Leader for this project at the address listed above.

Based on results of scoping and the resource capabilities within the project area, alternatives including a ''no action'' alternative will be developed for the Draft Environmental Impact Statement (Draft EIS). The Draft EIS is projected to be filed with the Environmental Protection Agency (EPA) in summer 2002. The Final EIS is anticipated in the spring of 2003.

The comment period on the draft environmental impact statement will be 45 days from the date the Environmental Protection Agency publishes the notice of availability in the **Federal Register**.

The Forest Service believes it is important to give reviewers notice of several court rulings related to public participation in the environmental review process. First, reviewers of draft environmental impact statements must structure their participation in the environmental review of the proposal so that it is meaningful and alerts an agency to the reviewer's position and contentions. *Vermont Yankee Nuclear Power Corp.* v. *NRDC,* 435 U.S. 519, 553, (1978). Environmental objections that could have been raised at the draft environmental impact statement stage may be waived or dismissed by the courts. *City of Angoon* v. *Hodel,* 803 F.2nd 1016, 1022 (9th Cir. 1986) and *Wisconsin Heritages, Inc.* v. *Harris,* 490 F. Supp. 1334, 1338 (E.D. Wis. 1980). Because of these court rulings, it is very important that those interested in this proposed action participate by the close of the 45-day comment period so that substantive comments and objections are made available to the Forest Service at a time when it can meaningfully consider them and respond to them in the final environmental impact statement.

To assist the Forest Service in identifying and considering issues and concerns of the proposed action, comments during scoping and comments on the draft environmental impact statement should be as specific as possible. It is also helpful if comments refer to specific pages or chapters of the draft statement. Comments may also address the adequacy of the draft environmental impact statement or the merits of the alternatives formulated and discussed in the statement. Reviewers may wish to refer to the Council on Environmental Quality Regulations for implementing the procedural provisions of the National Environmental Policy Act at 40 CFR 1503.3 in addressing these points. Comments received in response to this solicitation, including names and addresses of those who comment, will be considered part of the public record on this proposed action and will be available for public inspection. Comments submitted anonymously will be accepted and considered; however, those who submit anonymous comments will not have standing to appeal the subsequent decision under 36 CFR parts 215 or 217. Additionally, pursuant to 7 CFR 1.27(d), any person may request the agency to withhold a submission from the public record by showing how the Freedom of Information Act (FOIA) permits such confidentiality. Requesters should be aware that, under FOIA, confidentiality may be granted in only very limited circumstances, such as to protect trade secrets. The Forest Service will inform the requester of the agency's decision regarding the request for confidentiality, and where the request is denied, the agency will return the submission and notify the requester that the comments may be resubmitted with or without name and address within 7 days.

Permits: Permits required for implementation include the following:

1. U.S. Army Corp of Engineers

—Approval of discharge of dredged or fill material into the waters of the United States under Section 404 of the Clean Water Act;

—Approval of the construction of structures of work in navigable waters of the United Sates under Section 10 of the Rivers and Harbors Act of 1899;

2. Environmental Protection Agency

—National Pollutant Discharge Elimination System (402) Permit;

—Review Spill Prevention Control and Countermeasure Plan;

3. State of Alaska, Department of Natural Resources

—Tideland Permit and Lease or Easement;

4. State of Alaska, Department of Environmental Conservation

—Solid Waste Disposal Permit;

—Certification of Compliance with Alaska Water Quality Standards (401 Certification)

Thomas Puchlerz, Forest Supervisor, Tongass National Forest, Federal Building, Ketchikan, Alaska 99901, is the responsible official. The responsible official will consider the comments, response, disclosure of environmental consequences, and applicable laws, regulations, and policies in making the decision and stating the rationale in the Record of Decision.

Dated: February 12, 2002.

Thomas Puchlerz,

Forest Supervisor.

[FR Doc. 02–9301 Filed 4–16–02; 8:45 am]

BILLING CODE 3410–11–M

DEPARTMENT OF AGRICULTURE

Forest Service

Intergovernmental Advisory Committee Meeting

AGENCY: Forest Service, USDA.

ACTION: Notice of meeting.

SUMMARY: The Intergovernmental Advisory Committee (IAC) will meet on May 2, 2002, at the Double Tree Hotel, Lloyd Center, 1000 NE Multnomah, Portland, Oregon 97220. The primary purpose of the meeting is to continue with discussions on implementation of the Northwest Forest Plan (NWFP). The meeting is scheduled to begin at 10 a.m. and continue until 4:30 p.m. Agenda items to be discussed include, but are not limited to: Options for the Supporting Organizational Structure for the NWFP, Endangered Species Act salmonid Recovery Planning, Potential Future Direction of NWFP implementation, and recent court rulings related to the NWFP. The IAC meeting will be open to the public and is fully accessible for people with disabilities. Interpreters are available upon request at least 10 days in advance of the meeting. Written comments may be submitted for the record at the meeting. A time slot for oral public comments during the meeting is scheduled. Interested persons are encouraged to attend.

FOR FURTHER INFORMATION CONTACT: Questions regarding this meeting may be directed to Steve Odell, Executive Director, Regional Ecosystem Office, 333 S.W. First Avenue, P.O. Box 3623, Portland, OR 97208 (Phone: 503–808–2165).

Dated: April 11, 2002.

Stephen J. Odell,

Designated Federal Official.

[FR Doc. 02–9267 Filed 4–16–02; 8:45 am]

BILLING CODE 3410–11–M

DEPARTMENT OF COMMERCE

International Trade Administration

[A–351–605]

Frozen Concentrated Orange Juice from Brazil; Preliminary Results and Partial Rescission of Antidumping Duty Administrative Review

AGENCY: Import Administration, International Trade Administration, Department of Commerce.

SUMMARY: In response to a request by the petitioners and one producer/exporter of the subject merchandise, the Department of Commerce is conducting an administrative review of the antidumping duty order on frozen concentrated orange juice from Brazil. This review covers one manufacturer/exporter of the subject merchandise to the United States. The period of review is May 1, 2000, through April 30, 2001.

We have preliminarily determined that no sales have been made below the normal value by Branco Peres Citrus S.A. in this review. In addition, we have preliminarily determined to rescind the review with respect to Citrovita Agro-Industrial Ltda., CTM Citrus S.A., and Sucorrico S.A. If these preliminary results are adopted in the final results of this administrative review, we will instruct the Customs Service not to assess antidumping duties on any entries subject to this review.

We invite interested parties to comment on these preliminary results. Parties who wish to submit comments in this proceeding are requested to submit with each argument: (1) a statement of the issue; and (2) a brief summary of the argument.

EFFECTIVE DATE: April 17, 2002.

FOR FURTHER INFORMATION CONTACT: Irina Itkin or Elizabeth Eastwood, Office of AD/CVD Enforcement, Office 2, Import Administration, International Trade Administration, U.S. Department of Commerce, 14th Street and Constitution Avenue, NW, Washington, DC, 20230; telephone (202) 482–0656 or (202) 482–3874, respectively.

SUPPLEMENTARY INFORMATION:

Applicable Statute and Regulations

Unless otherwise indicated, all citations to the Tariff Act of 1930, as amended (the Act), are references to the provisions effective January 1, 1995, the effective date of the amendments made to the Act by the Uruguay Round Agreements Act (URAA). In addition, unless otherwise indicated, all citations are to the Department's regulations at 19 CFR part 351 (2001).

Background

On May 1, 2001, the Department of Commerce (the Department) published in the **Federal Register** a notice of ''Opportunity to Request an Administrative Review'' of the antidumping duty order on frozen concentrated orange juice (FCOJ) from Brazil (66 FR 21740).

In accordance with 19 CFR 351.213(b)(1), on May 31, 2001, one producer and exporter of FCOJ, Branco Peres Citrus, S.A. (Branco Peres), requested an administrative review covering the period May 1, 2000, through April 30, 2001. On May 31, 2001, the petitioners, Florida Citrus Mutual, Caulkins Indiantown Citrus Co., Citrus Belle, Citrus World, Inc., Orange-Co of Florida, Inc., Peace River Citrus Products, Inc., and Southern Gardens Citrus Processors Corp., also requested an administrative review for the following four producers and exporters of FCOJ: Branco Peres; Citrovita Agro-Industrial Ltda. and its affiliated parties Cambuhy MC Industrial Ltda. and Cambuhy Citrus Comercial e Exportadora (collectively ''Citrovita''); CTM Citrus S.A. (CTM); and Sucorrico S.A. (Sucorrico). On June 4, 2001, we issued questionnaires to each of these companies.

On June 19, 2001, the Department initiated an administrative review for Branco Peres, Citrovita and its affiliates Cambuhy and Cambuhy Exportadora, CTM, and Sucorrico (66 FR 32934).

On August 1, 2001, Sucorrico informed the Department that it had no shipments of subject merchandise to the United States during the period of review (POR). We reviewed Customs data to confirm that neither Sucorrico nor CTM had shipments of subject merchandise during the POR. Consequently, in accordance with 19 CFR 351.213(d)(3) and consistent with our practice, we are preliminarily rescinding our review for CTM and Sucorrico. For further discussion, see the ''Partial Rescission of Review'' section of this notice, below.

In August 2001, we received a response from Branco Peres to sections

A through D of the Department's questionnaire and issued a supplemental questionnaire to the respondent. We received a response to the supplemental questionnaire in September 2001.

In January 2002, the petitioners withdrew their request for review for Citrovita. Consequently, we are also preliminarily rescinding our review for Citrovita. For further discussion, see the ''Partial Rescission of Review'' section of this notice, below.

In January and February 2002, we issued additional supplemental questionnaires to Branco Peres. We received responses to these supplemental questionnaires in February and March 2002.

Scope of the Order

The merchandise covered by this review is frozen concentrated orange juice from Brazil. The merchandise is currently classifiable under item 2009.11.00 of the *Harmonized Tariff Schedule of the United States* (HTSUS). The HTSUS item number is provided for convenience and for customs purposes. The written description of the scope of this proceeding is dispositive.

Period of Review

The POR is May 1, 2000, through April 30, 2001.

Partial Rescission of Review

As noted above, Sucorrico informed the Department that it had no shipments of subject merchandise to the United States during the POR. We have confirmed with the Customs Service that neither Sucorrico nor CTM had shipments of subject merchandise during the POR. Therefore, in accordance with 19 CFR 351.213(d)(3) and consistent with the Department's practice, we are preliminarily rescinding our review with respect to CTM and Sucorrico. (*See e.g.*, *Certain Welded Carbon Steel Pipe and Tube from Turkey; Final Results and Partial Rescission of Antidumping Administrative Review*, 63 FR 35190, 35191 (June 29, 1998); and *Certain Fresh Cut Flowers from Colombia; Final Results and Partial Rescission of Antidumping Duty Administrative Review*, 62 FR 53287, 53288 (Oct. 14, 1997).)

In addition, on January 9, 2002, the petitioners withdrew their request for an administrative review of Citrovita. Although the petitioners asked to withdraw their review request after the 90–day time limit specified in 19 CFR 351.213(d)(1), the review for this company had not yet progressed beyond a point where it would have been unreasonable to allow the petitioners to withdraw their request for review. Therefore, in accordance with 19 CFR 351.213(d)(1) and consistent with our practice, we are also rescinding our review with respect to Citrovita.

Comparison Methodology

To determine whether sales of FCOJ from Brazil to the United States were made at less than normal value (NV), we compared the export price (EP) to the NV, as specified in the ''Export Price'' and ''Normal Value'' sections of this notice, below.

When making comparisons in accordance with section 771(16) of the Act, we considered all products sold in the home market as described in the ''Scope of the Review'' section of this notice, above, that were in the ordinary course of trade for purposes of determining appropriate product comparisons to U.S. sales.

Level of Trade

In accordance with section 773(a)(1)(B) of the Act, to the extent practicable, we determine NV based on sales in the comparison market at the same level of trade as EP. The NV level of trade is that of the starting-price sales in the comparison market or, when NV is based on CV, that of the sales from which we derive selling, general and administrative expenses (SG&A) and profit. For EP, it is also the level of the starting-price sales, which is usually from the exporter to the importer.

To determine whether NV sales are at a different level of trade than EP sales, we examine stages in the marketing process and selling functions along the chain of distribution between the producer and the unaffiliated customer. If the comparison-market sales are at a different level of trade, and the difference affects price comparability, as manifested in a pattern of consistent price differences between the sales on which NV is based and comparison-market sales at the level of trade of the export transaction, we make a level-of-trade adjustment under section 773(a)(7)(A) of the Act.

Branco Peres claimed that it made home market and U.S. sales at only one level of trade (i.e., sales to end users). Because Branco Peres performed the same selling activities for sales to all customers in the home market and the United States, we determined that these sales are at the same level of trade. Therefore, no level of trade adjustment is warranted for Branco Peres.

Export Price

For sales by Branco Peres, we based the starting price on EP, in accordance with section 772(a) of the Act, because the subject merchandise was sold to unaffiliated purchasers in the United States prior to importation and because constructed export price methodology was not otherwise applicable.

We based EP on the gross unit price to the first unaffiliated purchaser in the United States. Where appropriate, we made deductions for foreign inland freight, foreign warehousing expenses and foreign brokerage and handling expenses, in accordance with section 772(c)(2)(A) of the Act. We recalculated warehousing expenses using the per-ton amount charged by the warehouse each month and the average inventory carrying period reported by Branco Peres.

Normal Value

In order to determine whether there is a sufficient volume of sales in the home market to serve as a viable basis for calculating NV (*i.e.*, the aggregate volume of home market sales of the foreign like product is greater than five percent of the aggregate volume of U.S. sales), we compared the volume of Branco Peres' home market sales of the foreign like product to the volume of U.S. sales of subject merchandise, in accordance with 19 CFR 351.404(b). Based on this comparison, we determined that Branco Peres had a viable home market during the POR. Consequently, we based NV on home market sales.

Cost Investigation

In the eleventh administrative review, which was the most recently completed segment of the proceeding involving Branco Peres, the Department initiated an investigation to determine whether Branco Peres made home market sales during that POR at prices below the cost of production (COP). *See Frozen Concentrated Orange Juice from Brazil; Final Results and Partial Rescission of Antidumping Duty Administrative Review*, 64 FR 43650, 43652 (August 11, 1999). Even though we resorted to the use of total facts available in that review, we were able to complete the cost investigation because we were able to use the data provided by the petitioner to perform the cost test. Consequently, because the Department disregarded certain sales that failed the cost test in that review, pursuant to section 773(b)(2)(A)(ii) of the Act, we initiated a cost investigation on Branco Peres at the time we initiated this antidumping review because there were reasonable grounds to believe or suspect that Branco Peres had made home market sales below its COP.

In this review, we calculated the COP based on the sum of Branco Peres' costs of materials and fabrication for the foreign like product, plus amounts for general and administrative and financing expenses, in accordance with section 773(b)(3) of the Act. We made the following adjustments to the reported cost data:

1. We increased the cost of raw materials to account for certain purchases of oranges recognized as an expense during the POR, as well as certain payments made to a company for which Branco Peres provided tolling services;
2. We deducted the net amount of PIS and COFINS taxes charged on home market sales revenue which was included in COP;
3. We deducted PIS and COFINS taxes from the reported offset for by-product revenue;
4. We allocated the cost of processing equally to tolled and non-tolled products; and
5. We disallowed income from certain long-term loans as an offset to Branco Peres's financing expenses. In addition, we disallowed a deduction for PIS and COFINS taxes paid on financial income. We recalculated financing expenses accordingly.

We compared the COP to home market prices of the foreign like product, as required under section 773(b) of the Act, in order to determine whether these sales had been made at prices below the COP. On a product-specific basis, we compared the COP to home market prices, less any applicable movement charges, selling expenses, and packing costs.

In determining whether to disregard home market sales made at prices below the COP, we examined whether such sales were made: 1) in substantial quantities within an extended period of time; and 2) at prices which permitted the recovery of all costs within a reasonable period of time in the normal course of trade. *See* section 773(b)(1) of the Act.

Pursuant to section 773(b)(2)(c)(i) of the Act, where less than 20 percent of a company's sales of a given product are made at prices less than the COP, we do not disregard any below-cost sales of that product because we determine that the below-cost sales were not made in ''substantial quantities.'' Where 20 percent or more of Branco Peres' sales of a given product were at prices below the COP, we find that sales of the merchandise were made in ''substantial quantities'' within an extended period of time, as defined in sections 773(b)(2)(B) and (C) of the Act. In this case, we also determine whether such sales were made at prices which would permit recovery of all costs within a reasonable period of time, in accordance with section 773(b)(2)(D) of the Act.

We found that 100 percent of Branco Peres' home market sales were made at prices above the cost of production. Therefore, we did not disregard any home market sales. Accordingly, we based NV on delivered prices to home market customers because we found that all home market sales were in the ordinary course of trade. We made deductions from the starting price for taxes in accordance with section 773(a)(6)(B)(iii) of the Act. *See Notice of Preliminary Determination of Sales at Less Than Fair Value and Postponement of Final Determination: Carbon and Certain Alloy Steel Wire Rod from Brazil* issued on April 1, 2002.

Pursuant to section 773(a)(6)(C)(iii) of the Act and 19 CFR 351.410(c), we made a circumstance-of-sale adjustment for credit expenses. We recalculated credit expenses to use the average interest rate for the POR, rather than the annualized monthly rate reported by Branco Peres.

We also deducted home market packing costs and added U.S. packing costs in accordance with sections 773(a)(6)(A) and (B) of the Act.

Currency Conversion

We made currency conversions into U.S. dollars in accordance with section 773A(a) of the Act, based on the exchange rates in effect on the dates of the U.S. sales as certified by the Federal Reserve Bank.

Section 773A(a) of the Act directs the Department to use a daily exchange rate in order to convert foreign currencies into U.S. dollars unless the daily rate involves a fluctuation. It is the Department's practice to find that a fluctuation exists when the daily exchange rate differs from the benchmark rate by 2.25 percent. The benchmark is defined as the moving average of rates for the past 40 business days. When we determine a fluctuation to have existed, we substitute the benchmark for the daily rate, in accordance with established practice.

Preliminary Results of Review

As a result of our review, we preliminarily determine that the following margin exists for the period May 1, 2000, through April 30, 2001:

Manufacturer/Exporter	Percent Margin
Branco Peres Citrus S.A	0.00

The Department will disclose to parties the calculations performed in connection with these preliminary results within five days of the date of publication of this notice. Interested parties may request a hearing within 30 days of the date of publication. Any hearing, if requested, will be held seven days after the date rebuttal briefs are filed. Interested parties may submit case briefs not later than 30 days after the date of publication of this notice. Rebuttal briefs, limited to issues raised in the case briefs, may be filed not later than 37 days after the date of publication of this notice. The Department will publish a notice of the final results of this administrative review, which will include the results of its analysis of issues raised in any such case briefs, within 120 days of the publication of these preliminary results.

Upon completion of this administrative review, the Department shall determine, and the Customs Service shall assess, antidumping duties on all appropriate entries. We have calculated importer-specific assessment rates for the merchandise in question by aggregating the dumping margins calculated for all U.S. sales to each importer and dividing this amount by the total quantity of those sales. The assessment rate will be assessed uniformly on all entries of that particular importer made during the POR, where appropriate. The Department will issue appraisement instructions directly to the Customs Service.

Further, the following deposit requirements will be effective for all shipments of FCOJ from Brazil entered, or withdrawn from warehouse, for consumption on or after the publication date of the final results of this administrative review, as provided for by section 751(a)(1) of the Act: 1) the cash deposit rates for Branco Peres will be the rate established in the final results of this review, except if the rate is less than 0.50 percent and, therefore, de minimis within the meaning of 19 CFR 351.106, the cash deposit will be zero; 2) for previously reviewed or investigated companies not listed above, the cash deposit rate will continue to be the company-specific rate published for the most recent period; 3) if the exporter is not a firm covered in this review, a prior review, or the less-than-fair-value (LTFV) investigation, but the manufacturer is, the cash deposit rate will be the rate established for the most recent period for the manufacturer of the merchandise; and 4) the cash deposit rate for all other manufacturers or exporters will continue to be 1.96

percent, the all others rate established in the LTFV investigation.

These deposit requirements, when imposed, shall remain in effect until publication of the final results of the next administrative review.

This notice serves as a preliminary reminder to importers of their responsibility under 19 CFR 351.402(f) to file a certificate regarding the reimbursement of antidumping duties prior to liquidation of the relevant entries during this review period. Failure to comply with this requirement could result in the Secretary's presumption that reimbursement of antidumping duties occurred and the subsequent assessment of double antidumping duties.

This administrative review and notice are in accordance with sections 751(a)(1) and 777(i)(1) of the Act.

Dated: April 10, 2002

Faryar Shirzad,

Assistant Secretary for Import Administration.

[FR Doc. 02–9332 Filed 4–16–02; 8:45 am]

BILLING CODE 3510–DS–S

DEPARTMENT OF COMMERCE

International Trade Administration

The Pennsylvania State University; Notice of Decision on Application for Duty-Free Entry of Scientific Instrument

This decision is made pursuant to section 6(c) of the Educational, Scientific, and Cultural Materials Importation Act of 1966 (Pub. L. 89–651, 80 Stat. 897; 15 CFR part 301). Related records can be viewed between 8:30 a.m.. and 5 p.m. in Suite 4100W, Franklin Court Building, U.S. Department of Commerce, 1099 14th Street, NW., Washington, DC.

Docket Number: 02–005.

Applicant: The Pennsylvania State University, University Park, PA 16802.

Instrument: Slow Scan CCD Camera, Model TemCam F–224.

Manufacturer: Tietz Video and Image Processing Systems GmbH, Germany.

Intended Use: See notice at 67 FR 10388, March 7, 2002.

Comments: None received.

Decision: Approved. No instrument of equivalent scientific value to the foreign instrument, for such purposes as it is intended to be used, is being manufactured in the United States.

Reasons: The foreign instrument provides hardware and software compatibility and imaging comparability with previous studies by the applicant and with future studies to be performed in collaboration with another institution which uses the foreign camera system. These advantages may not be readily attainable using an otherwise comparable domestic system. This capability is pertinent to the applicant's intended purposes and we know of no other instrument or apparatus of equivalent scientific value to the foreign instrument which is being manufactured in the United States.

Gerald A. Zerdy,

Program Manager, Statutory Import Programs Staff.

[FR Doc. 02–9334 Filed 4–16–02; 8:45 am]

BILLING CODE 3510–DS–P

DEPARTMENT OF COMMERCE

International Trade Administration

University of California, *et al.*; Notice of Consolidated Decision on Applications for Duty-Free Entry of Electron Microscopes

This is a decision consolidated pursuant to section 6(c) of the Educational, Scientific, and Cultural Materials Importation Act of 1966 (Pub. L. 89–651, 80 Stat. 897; 15 CFR part 301). Related records can be viewed between 8:30 a.m. and 5 p.m. in Suite 4100W, Franklin Court Building, U.S. Department of Commerce, 1099 14th Street, NW., Washington, DC.

Docket Number: 02–004.

Applicant: University of California, Lawrence Berkeley National Laboratory, Berkeley, CA 94720.

Instrument: Electron Microscope, Model JEM–2010.

Manufacturer: JEOL Ltd., Japan.

Intended Use: See notice at 67 FR 9652, March 4, 2002.

Order Date: October 25, 2001.

Docket Number: 02–006.

Applicant: St. Joseph's University, Philadelphia, PA 19131.

Instrument: Electron Microscope, Model JEM–1010.

Manufacturer: JEOL Ltd., Japan.

Intended Use: See notice at 67 FR 10389, March 7, 2002.

Order Date: October 2, 2001.

Comments: None received.

Decision: Approved. No instrument of equivalent scientific value to the foreign instrument, for such purposes as these instruments are intended to be used, was being manufactured in the United States at the time the instruments were ordered. Reasons: Each foreign instrument is a conventional transmission electron microscope (CTEM) and is intended for research or scientific educational uses requiring a CTEM. We know of no CTEM, or any other instrument suited to these purposes, which was being manufactured in the United States at the time of order of each instrument.

Gerald A. Zerdy,

Program Manager, Statutory Import Programs Staff.

[FR Doc. 02–9333 Filed 4–16–02; 8:45 am]

BILLING CODE 3510–DS–P

DEPARTMENT OF COMMERCE

International Trade Administration

Applications for Duty-Free Entry of Scientific Instruments

Pursuant to section 6(c) of the Educational, Scientific and Cultural Materials Importation Act of 1966 (Pub. L. 89–651; 80 Stat. 897; 15 CFR part 301), we invite comments on the question of whether instruments of equivalent scientific value, for the purposes for which the instruments shown below are intended to be used, are being manufactured in the United States.

Comments must comply with 15 CFR 301.5(a)(3) and (4) of the regulations and be filed within 20 days with the Statutory Import Programs Staff, U.S. Department of Commerce, Washington, DC 20230. Applications may be examined between 8:30 A.M. and 5:00 P.M. in Suite 4100W, U.S. Department of Commerce, Franklin Court Building, 1099 14th Street, NW, Washington, DC.

Docket Number: 02–009. *Applicant:* The University of Akron, 302 E. Buchtel Avenue, Akron, OH 44325. *Instrument:* Shielded Room (Low Field Cage) MMLFC. *Manufacturer:* Magnetic Measurements Ltd., United Kingdom. *Intended Use:* The instrument is intended to be used to study remanent magnetic properties of sediments using samples from a variety of geologic settings such as lakes, river terraces and loess-soil profiles. Also, the instrument will be used in the following courses: (1) Environmental Magnetism (3370:444/544), (2) Research Problems in Geology (3370:499) and (3) Master's thesis (3370:699). Application accepted by Commissioner of Customs: March 21, 2002.

Docket Number: 02–011. *Applicant:* University of Wisconsin—Milwaukee, Department of Physics, 1900 E. Kenwood Blvd., Milwaukee, WI 53211. *Instrument:* IR Image Furnace, Model SCI-MDH–11020. *Manufacturer:* NEC Machinery Corporation, Japan. *Intended Use:* The instrument is intended to be used for the synthesis of single crystals of electronic-oxide materials using the

''floating-zone'' technique to study fundamental properties and mechanisms involved in materials which exhibit superconductivity, magnetism and ferro-electricity. Application accepted by Commissioner of Customs: March 21, 2002.

Gerald A. Zerdy,

Program Manager, Statutory Import Programs Staff.

[FR Doc. 02–9335 Filed 4–16–02; 8:45 am]

BILLING CODE 3510–DS–P

DEPARTMENT OF COMMERCE

International Trade Administration

Application for Duty-Free Entry of Scientific Instrument

Pursuant to section 6(c) of the Educational, Scientific and Cultural Materials Importation Act of 1966 (Pub. L. 89–651; 80 Stat. 897; 15 CFR part 301), we invite comments on the question of whether an instrument of equivalent scientific value, for the purposes for which the instrument shown below is intended to be used, is being manufactured in the United States.

Comments must comply with 15 CFR 301.5(a)(3) and (4) of the regulations and be filed within 20 days with the Statutory Import Programs Staff, U.S. Department of Commerce, Washington, DC 20230. Applications may be examined between 8:30 A.M. and 5:00 P.M. in Suite 4100W, U.S. Department of Commerce, Franklin Court Building, 1099 14th Street, NW, Washington, DC.

Docket Number: 02–010.

Applicant: University of New Mexico, Department of Pathology, 915 Camino de Salud NE, Albuquerque, NM 87131–5226.

Instrument: Electron Microscope, Model H–7500–1.

Manufacturer: Hitachi Ltd., Japan.

Intended Use: The instrument is intended to be used for research in the following categories and projects:

1. Signal tranduction, adhesion and trafficking

(a) Signaling through the high affinity IgE receptor of basophils and mast cells.

(b) Functional analysis of Rabs in Polycystic Kidney Disease.

(c) Membrane lipid topography and signal transduction/intracellular trafficking of cytokines.

(d) Localizing the formylpeptide receptor by gold labeling and electron microscopy.

(e) Relationship of the membrane topography of adhesion molecules to leukocyte adhesive activity.

2. Neuroscience

(a) Effect of peroxynitrite on myelin compaction.

(b) Role of RNA-protein interactions in the control of GAP–43 mRNA stability.

(c) SNAP–25 expression of hyperactivity in Coloboma mice.

3. Molecular genetics and molecular virology

(a) Function of mRNA binding proteins in mRNA 3'' end formation and intranuclear trafficking.

(b) Human papillomavirus synthesis and early infection events.

(c) Structure of mammalian DNA replication complexes. Application accepted by Commissioner of Customs: March 18, 2002.

Gerald A. Zerdy,

Program Manager, Statutory Import Programs Staff.

[FR Doc. 02–9336 Filed 4–16–02; 8:45 am]

BILLING CODE 3510–DS–P

DEPARTMENT OF COMMERCE

International Trade Administration

Notice of Reduction of Canadian Most Favored Nation Rates of Duty for Certain Worsted Wool Fabrics

AGENCY: International Trade Administration, Department of Commerce.

ACTION: The Department of Commerce is publishing a notice of reduction of Canadian most favored nation rates of duty for certain worsted wool fabrics.

FOR FURTHER INFORMATION CONTACT: Jay Dowling, Office of Textiles and Apparel, U.S. Department of Commerce, (202) 482–4058.

SUPPLEMENTARY INFORMATION:

BACKGROUND:

Title V of the Trade and Development Act of 2000 (the Act) creates two tariff rate quotas, providing for temporary reductions in the import duties on two categories of worsted wool fabrics suitable for use in making suits, suit-type jackets, or trousers. For worsted wool fabric with average fiber diameters greater than 18.5 microns (HTS heading 9902.51.11), the reduction in duty is limited to 2,500,000 square meters per year. For worsted wool fabric with average fiber diameters of 18.5 microns or less (HTS heading 9902.51.12), the reduction is limited to 1,500,000 square meters per year. Both of these limitations may be modified by the President, not to exceed 1,000,000 square meters per year for each tariff rate quota.

Title V of the Act authorizes the President to proclaim a reduction in the rate of duty applicable to imports of worsted wool fabrics classified under subheading 9902.51.12 of the HTS that is necessary to equalize such rate of duty with the most favored nation rate of duty applicable to imports of worsted wool fabrics of the kind described in such subheading imported into Canada.

Presidential Proclamation 7383 of December 1, 2000, authorizes the Secretary of Commerce to monitor the most favored nation rate of duty applicable to imports into Canada of worsted wool fabric of the kind classified under heading 9902.51.12 of the HTS and to notify the President of any reduction, effective on or after May 18, 2000, in the Canadian most favored nation rate of duty on such imports. The Secretary is further directed to cause to be published in the Federal Register a notice describing any such reduction.

The Secretary of Commerce has notified the President of these reductions.

The Department of Commerce hereby provides notice that during 2001, Canada established four new tariff provisions for certain worsted wool fabrics. Canada established a most-favored-nation rate of duty for each of these four new tariff provisions of ''Free''. The goods described by these tariff provisions would otherwise be subject to a duty of 16 percent ad valorem, but not to exceed C$4.56/kg. These tariff provisions include worsted wool fabrics of the kind classified under subheading 9902.51.12 of the Harmonized Tariff Schedule of the United States (HTS).

The following two Canadian tariff provisions were effective as of January 23, 2001:

5112 ..... Woven fabrics of combed wool or of combed fine animal hair, containing 85% or more by weight of wool or of fine animal hair:

	The following two Canadian tariff provisions were effective as of January 23, 2001:
5112.11.20.00	Fabrics of a weight not exceeding 200 g/m2, solely of combed wool with average fibre diameters of 17.5 microns or less and of combed fine animal hair, measuring 100 decitex or less per single yarn, certified by the exporter to contain 7% or more by weight of fine animal hair, of a weight of 140 g/m2 or more, for use in the manufacture of men's suits, suit-type jackets, blazers, vests (waistcoats) and trousers.
5112.19.20.00	Fabrics of a weight exceeding 200 g/m2, solely of combed wool with average fibre diameters of 17.5 microns or less and of combed fine animal hair, measuring 100 decitex or less per single yarn, certified by the exporter to contain 7% or more by weight of fine animal hair, of a weight not exceeding 300 g/m2, for use in the manufacture of men's suits, suit-type jackets, vests (waistcoats) and trousers.
	The following two Canadian tariff provisions were effective as of November 22, 2001:
5112	Woven fabrics of combed wool or of combed fine animal hair, containing 85% or more by weight of wool or of fine animal hair:
5112.11.40.00	Fabrics of a weight not exceeding 200 g/m2, solely of combed wool or of combed wool mixed solely with cotton, silk or man-made fibres, containing 95% or more by weight of worsted wool with average fibre diameters of 18.5 microns or less, for use in the manufacture of men's suits, jackets, blazers, vests (waistcoats) and trousers.
5112.19.40.00	Fabrics of a weight exceeding 200 g/m2, solely of combed wool or of combed wool mixed solely with cotton, silk or man-made fibres, containing 95% or more by weight of worsted wool with average fibre diameters of 18.5 microns or less, of a weight not exceeding 220 g/m2, for use in the manufacture of men's suits, jackets, blazers, vests (waistcoats) and trousers.

Date: April 5, 2002.

Donald L. Evans,

Secretary of Commerce.

[FR Doc.02–8794 Filed 4–16–02; 8:45 am]

BILLING CODE 3510–DR–S

DEPARTMENT OF COMMERCE

National Institute of Standards and Technology

Proposed Information Collection; Comment Request; Manufacturing Extension Partnership (MEP) Program Evaluation Survey

ACTION: Notice.

SUMMARY: The Department of Commerce, as part of its continuing effort to reduce paperwork and respondent burden, invites the general public and other Federal agencies to take this opportunity to comment on proposed and/or continuing information collections, as required by the Paperwork Reduction Act of 1995, Public Law 104–13 (44 U.S.C. 3506 (2)(A)).

DATES: Written comments must be submitted on or before June 17, 2002.

ADDRESSES: Direct written comments to Madeleine Clayton, Departmental Paperwork Clearance Officer, Department of Commerce, Room 6608, 14th and Constitution Avenue, NW., Washington, DC 20230, (202) 482–3129 (or via the Internet at *MClayton@doc.gov*).

FOR FURTHER INFORMATION CONTACT: Requests for additional information or copies of the information collection instrument(s) and instructions should be directed to Karen Lellock, National Institute of Standards and Technology, Manufacturing Extension Partnership, 100 Bureau Drive, Stop 4800, Gaithersburg, MD 20899–4800, (301) 975–4269 (phone) and (301) 926–3787 (fax).

SUPPLEMENTARY INFORMATION:

I. Abstract

This collection of information sponsored by National Institute of Standards and Technology (NIST), the Manufacturing Extension Partnership (MEP) is a national network of locally based manufacturing extension centers working with small manufacturers to help them improve their productivity, improve profitability and enhance their economic competitiveness.

Obtaining specific information from clients about the impact of MEP services is essential for NIST officials to evaluate program strengths and weaknesses and plan improvements in program effectiveness and efficiency. This information is not available from existing programs or other sources.

II. Method of Collection

Clients have three options for completing the survey including Computer Assisted Telephone (CATI), Interactive Voice Response (IVR) or via the Internet.

III. Data

OMB Number: 0693–0029.

Form Number: None.

Type of Review: Regular submission.

Affected Public: Business or other for-profit organizations.

Estimated Number of Respondents: 6,500.

Estimated Time Per Response: 10 minutes.

Estimated Total Annual Burden Hours: 1,083.

Estimated Total Annual Cost to the Public: $0.

IV. Request for Comments

Comments are invited on: (a) Whether the proposed collection of information is necessary for the proper performance of the functions of the agency, including whether the information shall have practical utility; (b) the accuracy of the agency's estimate of the burden (including hours and costs) of the proposed collection of information; (c) ways to enhance the quality, utility, and

clarity of the information to be collected; and (d) ways to minimize the burden of the collection of information on respondents.

Comments submitted in response to this notice will be summarized and/or included in the request for OMB approval of this information collection; they will also become a matter of public record.

Dated: April 11, 2002

Madeleine Clayton,

Deparmental Paperwork Clearance Officer, Officer of the Chief Information Officer.

[FR Doc. 02–9240 Filed 4–16–02; 8:45 am]

BILLING CODE 3510–13–P

DEPARTMENT OF COMMERCE

National Oceanic and Atmospheric Administration

[I.D. 041202A]

Proposed Information Collection; Comment Request; Social Science Data for Alaska Fisheries

AGENCY: National Oceanic and Atmospheric Administration (NOAA).

ACTION: Notice.

SUMMARY: The Department of Commerce, as part of its continuing effort to reduce paperwork and respondent burden, invites the general public and other Federal agencies to take this opportunity to comment on proposed and/or continuing information collections, as required by the Paperwork Reduction Act of 1995, Pub. L. 104–13 (44 U.S.C. 3506 (c)(2)(A)).

DATES: Written comments must be submitted on or before June 17, 2002.

ADDRESSES: Direct all written comments to Madeleine Clayton, Departmental Paperwork Clearance Officer, Department of Commerce, Room 6086, 14th and Constitution Avenue NW, Washington DC 20230 (or via Internet at MClayton@doc.gov).

FOR FURTHER INFORMATION CONTACT: Requests for additional information or copies of the information collection instrument(s) and instructions should be directed to Jennifer Sepez, Anthropologist, Alaska Fisheries Science Center, 7600 Sand Point Way NE, Seattle, WA 98115–0070 (Jennifer.Sepez@noaa.gov).

SUPPLEMENTARY INFORMATION:

I. Abstract

Social science data for selected Alaska fisheries will be collected for communities and individual participants involved in the following sectors: commercial harvesting and processing, sport-fishing, and subsistence. In general, the questions asked will be about the social aspects of fisheries and impacts on individuals and communities. The data collected will include information on topics such as fishery participation and impacts, life histories, community structure and dynamics, knowledge and perceptions, decision-making criteria, and geographical distribution. This information will be used to (1) describe and analyze the social aspects of fisheries, (2) monitor the social impacts of fisheries, (3) analyze the social impacts of current management measures; and (4) analyze the social impacts of alternative management measures.

The large scale and wide geographic area relevant to Alaska fisheries will not permit fieldwork in every fishing community. However, a goal of the research over a five-year period will be to conduct fieldwork in each general region and in representative communities.

II. Method of Collection

The data will be collected principally by the National Marine Fisheries Service (NMFS) social scientists and contractors, and will include interviews, surveys, and focus groups. In-depth interviews and focus groups generally will be administered in person and on-site in the fishing community, or by telephone. Surveys may be administered in person on-site, or may additionally be conducted by mail, telephone, or Internet.

III. Data

OMB Number: None.

Form Number: None.

Type of Review: Regular submission.

Affected Public: Individuals or households, business or other for-profit organizations, and State, Local, or Tribal government (communities and individuals participating in fisheries in Alaska).

Estimated Number of Respondents: 1500 (100 in-depth interviews; and 1,400 brief interviews or surveys).

Estimated Time Per Response: 1 hour per in-depth interview; and 30 minutes per brief interview or survey.

Estimated Total Annual Burden Hours: 800.

Estimated Total Annual Cost to Public: $0.

IV. Request for Comments

Comments are invited on: (a) whether the proposed collection of information is necessary for the proper performance of the functions of the agency, including whether the information shall have practical utility; (b) the accuracy of the agency's estimate of the burden (including hours and cost) of the proposed collection of information; (c) ways to enhance the quality, utility, and clarity of the information to be collected; and (d) ways to minimize the burden of the collection of information on respondents, including through the use of automated collection techniques or other forms of information technology.

Comments submitted in response to this notice will be summarized and/or included in the request for OMB approval of this information collection; they also will become a matter of public record.

Dated: April 11, 2002.

Madeleine Clayton,

Departmental Paperwork Clearance Officer, Office of the Chief Information Officer.

[FR Doc. 02–9350 Filed 4–16–02; 8:45 am]

BILLING CODE 3510–22–S

DEPARTMENT OF COMMERCE

National Oceanic and Atmospheric Administration

[Docket No. 001214351–2006–03]

Dr. Nancy Foster Scholarship Program; Financial Assistance for Graduate Students

AGENCY: National Ocean Service (NOS), National Oceanic and Atmospheric Administration (NOAA), Department of Commerce.

ACTION: Notice.

SUMMARY: The National Oceanic and Atmospheric Administration (NOAA) is announcing funding availability for graduate students pursuing masters or doctoral level degrees in oceanography, marine biology, or maritime archaeology through the Dr. Nancy Foster Scholarship Program and is inviting applications for such scholarships. The intent of this program is to recognize outstanding scholarship and encourage independent graduate level research in the above mentioned fields.

DATES: Applications must be received by May 17, 2002, no later than 5 p.m. Eastern Standard Time. Scholarship awards will be announced around July 2002.

ADDRESSES: Applications should be sent to the Dr. Nancy Foster Scholarship Program, Attention: Office of the Assistant Administrator, 13th Floor, National Ocean Service, 1305 East-West Highway, Silver Spring, MD 20910. Information on the scholarship program may be obtained from the Web site:

http://fosterscholars.noaa.gov Copies of form CD–511 may be requested from the above mailing address or may be downloaded from the Department of Commerce Web site: *http://www.doc.gov/oebam/gforms.htm.*

FOR FURTHER INFORMATION CONTACT: Dr. Nancy Foster Scholarship Program, Office of the Assistant Administrator, 13th Floor, National Ocean Service, 1305 East-West Highway, Silver Spring, MD 20910 (301–713–3074).

SUPPLEMENTARY INFORMATION:

Authority: The Dr. Nancy Foster Scholarship Program is authorized by the National Marine Sanctuaries Amendments Act of 2000 (Pub. L. 106–513) to recognize outstanding scholarship in oceanography, marine biology, or maritime archaeology, particularly by women and members of minority groups, and encourage independent graduate-level research through financial support of graduate studies in such fields.

Catalog of Federal Domestic Assistance: This program is listed under CFDA #11.460, titled Special Oceanic and Atmospheric Projects.

Program Description: The Dr. Nancy Foster Scholarship Program provides support for independent graduate-level studies in oceanography, marine biology, or maritime archaeology, particularly by women and members of minority groups. Gender and minority status is not considered when selecting award recipients. However, special outreach efforts are employed to solicit applications from women and minorities. Scholarship selections are based on financial need, academic excellence, recommendations, and research and career goals. The program is administered through NOAA's National Ocean Service and is funded annually with 1% of the amount appropriated each fiscal year to carry out the National Marine Sanctuaries Act.

Funding Availability: For the 2002–2003 academic year, Dr. Nancy Foster Scholarships may provide support of up to $32,000 per student: a 12-month stipend of $20,000 in addition to a tuition allowance of up to $12,000. A maximum of $64,000 may be provided to masters students (up to two years of support) and up to $128,000 may be provided to doctoral students (up to four years of support). For the 2002–2003 academic year, NOAA expects to award five scholarships.

The annual stipend will be paid directly to the scholar. The stipend is intended to defray cost-of-living expenses, and not to support research costs. NOAA anticipates the student and their faculty advisor will secure research funds independent of the scholarship. Tuition and academic fees will be negotiated between the academic institution and the Dr. Nancy Foster Scholarship program manager at NOAA prior to the receipt of funds. This negotiation is intended to leverage scholarship funds and enhance opportunities for scholarship recipients. In those instances in which tuition and academic fees are not totally waived by the academic institution, the tuition allowance in an amount equal to the tuition and fees not waived (but not to exceed $12,000) will be paid directly to the scholar for remittance to the academic institution. If tuition and fees are reduced or waived by the academic institution, then that portion of the tuition allowance not needed (*i.e.,* up to $12,000 in the case of a total waiver) will be retained by NOAA for future scholarships. No money will be paid directly to the student from the tuition allowance for purposes other than the payment of tuition and fees.

Specific instructions regarding the disbursement, management, and reporting requirements for all stipend and tuition allowance payments will be provided to the scholarship recipients upon selection for the award. The awarding of funds beyond the first year will be based on availability of funds, continued eligibility of the student, periodic certification by the academic institution that adequate academic progress is being made, and compliance with applicable reporting requirements. At its discretion, each academic institution may supplement a scholar's stipend from institutional funds in accordance with the supplementation policy of the institution.

Matching Requirements: There are no matching requirements for an award.

Type of Funding Instrument: Grant.

Eligibility Criteria: Only United States citizens currently pursuing or intending to pursue a masters or doctoral level degree in oceanography, marine biology, or maritime archaeology, including the curation, preservation, and display of maritime artifacts, are eligible for an award under this scholarship program. Prospective scholars do not need to be enrolled, but should be admitted to a graduate-level program in order to apply for this scholarship. Funds will not be released until the applicant provides certification (from the student's institution) supporting the student's acceptance to a graduate program. Studies must be conducted on a full-time basis. Recipients of scholarship awards may be employed at the time of the award if it is a requirement of their degree program or directly related to their research effort. Other forms of employment will not be allowed and scholars will be required to submit a letter certifying that they are in compliance with this requirement. Eligibility must be maintained for each succeeding year of support and annual reporting requirements, to be specified at a later date, will apply.

Award Period: This solicitation applies only to applicants whose studies begin in the fall 2002. Stipends will cover a 12 month period. Masters students may be supported for up to two years, and doctoral students for up to four years.

Indirect Costs: No indirect costs will be paid on this award.

Applications: This notice contains all necessary information and announces a closing date of May 17, 2002, for the submission of applications. Applications must be received May 17, 2002, no later than 5 Eastern Standard Time. Scholarship awards will be announced around July 2002.

Applications: Each application must include these following items. Failure to submit these items exactly as described in each section below will disqualify the application from consideration.

(I) General Information Sheet

(II) Statement of Intent

(III) Institute Certification or Letter of Acceptance (for those applicants who are currently enrolled in a graduate program for which support is requested, or who have received acceptance for fall 2002 enrollment in a graduate program for which support is requested)

(IV) Transcripts

(V) Three Letters of Recommendation

(VI) Declaration.

I. General Information Sheet

Personal Data: Provide your full name, country of citizenship, current address, permanent address, and home and work telephone numbers. If you can be reached by fax or e-mail, include that information. Optional—for statistical collection purposes only: Indicate your gender and whether you are Hispanic or Latino and indicate your race by selecting one or more of the following: American Indian or Alaska Native, Asian, Black or African-American, Native Hawaiian or Other Pacific Islander, or White.

Degree Sought: State your proposed field of study (oceanography, marine biology or maritime archaeology) and degree type you are seeking (*e.g.,* M.S., M.A., Ph.D). Include the month and year you expect the degree to be awarded. State the name and location of your institution.

Education: List the academic degrees you have received, or expect to receive by the start of your proposed graduate studies for this program, including the date and institution.

Funding Resources: List all resources you have available to assist you in your graduate studies (*e.g.,* grants, student loans, scholarships). You must be specific. List all resources by date and amount received. Indicate whether the funding source will continue throughout the 2002–2003 school year. Also indicate any work requirements associated with these resources.

II. Statement of Intent

The Statement of Intent is a self-description of your academic, research, and career goals, and how your proposed course of study or research will help you achieve these goals but more importantly, this is your opportunity to present yourself, your beliefs, your inspiration. Include any background information you believe is pertinent, and provide insight into why you have chosen the goals you are pursuing. This statement should not be a research proposal or scientific abstract. This statement will be used to evaluate you as an individual, not necessarily as a scientist, and your motivation for applying for this scholarship. This statement should demonstrate your organizational, analytical, and written communication skills. The Statement of Intent should be typewritten in a size ''12'' font and single-spaced on a blank sheet of paper, and not exceed one page in length. Statements longer than one page will not be accepted and will result in the application being disqualified.

III. Institute Certification

A letter from the applicant's institution certifying that the student is enrolled or has been accepted to a graduate program must be submitted with your application. The letter should consist of the following information on school letterhead and be signed by a school official: Name and location of the academic institution, the school and department that you currently are attending or plan to attend, and the month and year your studies will begin if you are not currently enrolled. If you have a graduate advisor, list his/her name, address, phone, fax, and e-mail, if available, in the Institute Certification portion of your application. Current transcripts will not be accepted in lieu of Institute Certification. Failure to include the Institute Certification specifically as indicated above will result in the application being disqualified.

IV. Transcripts

Provide transcripts for all previous university/college-level studies. Photocopied transcripts are acceptable. Transcripts must be included with all other application materials. Those mailed separately will not be accepted. Failure to include transcripts from all previous university/college-level studies will result in the application being disqualified.

V. Three Letters of Recommendation

Each application must include three, but only three, signed letters of recommendation from individuals who have knowledge of your academic record, research effort, work and/or life experience. Relevant unpaid work, such as internships and volunteer efforts, is applicable. If you have a sponsor or advisor in the program, one of these letters should be from that individual. Letters of recommendation sent apart from the application will not be accepted. Applications without three, signed letters of recommendation or with more than three letters of recommendation will result in the application being disqualified.

VI. Declaration

Applicants must certify that all statements and information in their applications are true and correct by copying the following on a plain sheet of paper, signing it, and including it in their application:

I, the undersigned, declare, under penalty of perjury, that all statements and information in my application are true and correct.

Executed on [insert date].

_____

Print or Type Name

_____

Signature

Failure to include this statement, signed by the applicant, will result in the application being disqualified.

Funding Priorities: The priority of the program is to fund independent graduate-level studies in oceanography, marine biology, or maritime archaeology with scholarships distributed by disciplines, institutions and geography, and by the degree type and level being sought, with selections within distributions based on financial need, the potential for success in a graduate studies program, and the potential for achieving research and career goals.

Evaluation Criteria: The evaluation criteria and their weights are as follows: (a) Financial need (40%); (b) academic record (20%); (c) recommendations (18%); (d) organizational, analytical, and written communication skills based on statement of intent (15%); and (e) research and career goals and objectives as described in your statement of intent (7%).

Selection Procedures: An advisory panel of NOAA experts will review applications based on the evaluation criteria and provide a numerical score for each. The Program Administrator will rank the applications based on these scores. Applications falling within the top 10 percent will be reviewed by a second panel of federal experts from which scholarship recipients will be chosen. The panel will consider the following: availability of funds, distribution of awards across disciplines, institutions and geography, the degree type and level being sought, and the statement of intent. Therefore, scholarship awards will not necessarily be made to the applicants receiving the highest scores. The panel will arrive at a consensus decision for selection of scholarship recipients.

Announcement of Awards: The names, academic institutions, degrees being sought, research plans, and biographical information of the scholarship awardees will be posted on NOAA's National Ocean Service Web site and may be published in marketing materials developed to advertise the Dr. Nancy Foster Scholarship Program.

Unsuccessful Applicants: The applications of unsuccessful applicants will be maintained as part of the Program files for a period of 3 years following the selection of the recipients.

Other Requirements: The Department of Commerce Pre-Award Notification Requirements for Grants and Cooperative Agreements contained in the **Federal Register** notice of October 1, 2001 (66 FR 49917) are applicable to this solicitation. However, please note that the Department will not implement the requirements of Executive Order 13202 (66 FR 49921), pursuant to guidance issued by the Office of Management and Budget in light of a court opinion which found that the Executive Order was not legally authorized. *See Building and Construction Trades Department* v. *Allbaugh,* 172 F. Supp. 2d 138 (D.D.C. 2001). This decision is currently on appeal. When the case has been finally resolved, the Department will provide further information on implementation of Executive Order 13202.

Classification: This document contains collection-of-information requirements subject to the Paperwork Reduction Act (PRA). This application has been approved by the Office of Management and Budget (OMB) under control number 0648–0432. Public reporting burden for this collection of information is estimated to average 5 hours for an application and 45 minutes per letter of recommendation. These estimates include the time for reviewing

instructions, searching existing data sources, gathering and maintaining the data needed, and completing and reviewing the collection of information. Notwithstanding any other provision of law, no person is required to respond to, nor shall any person be subject to a penalty for failure to comply with, a collection-of-information subject to the PRA, unless that collection displays a currently valid OMB control number.

Applications under this program are not subject to Executive Order 12372, Intergovernmental Review of Federal Programs.

This action has been determined to be not significant for purposes of Executive Order 12866.

Because notice and comment are not required under 5 USC 553, or any other law, for notices relating to public property, loans, grants, benefits or contracts, a Regulatory Flexibility Analysis, 5 USC 601 *et seq.* is not required and has not been prepared for this notice.

Alan Neuschatz,

Associate Assistant Administrator for Management, National Ocean Service, National Oceanic and Atmospheric Administration, U.S. Department of Commerce.

[FR Doc. 02–9271 Filed 4–16–02; 8:45 am]

BILLING CODE 3510–JE–P

DEPARTMENT OF COMMERCE

National Oceanic and Atmospheric Administration

[I.D. 040902I]

Marine Mammals; File No. 954–1517

AGENCY: National Marine Fisheries Service (NMFS), National Oceanic and Atmospheric Administration (NOAA), Commerce.

ACTION: Issuance of permit amendment.

SUMMARY: Notice is hereby given that Michael Kundu, Project Sea Wolf, 5516 64th Place, NE, Marysville, Washington has been issued a minor amendment to commercial/educational photography Permit No.954–1517–01.

ADDRESSES: The amendment and related documents are available for review upon written request or by appointment in the following office(s):

Permits, Conservation and Education Division, Office of Protected Resources, NMFS, 1315 East-West Highway, Room 13705, Silver Spring, MD 20910; phone (301) 713–2289; fax (301) 713–0376;

Northwest Region, NMFS, 7600 Sand Point Way NE, BIN C15700, Bldg. 1, Seattle, WA 98115–0700; phone (206) 526–6150; fax (206) 526–6426.

FOR FURTHER INFORMATION CONTACT: Lynne Barre or Trevor Spradlin, (301) 713–2289.

SUPPLEMENTARY INFORMATION: The subject amendment to Permit No. 954-1517-01, originally issued on December 30, 1999 (65 FR 1853) has been granted under the authority of the Marine Mammal Protection Act of 1972, as amended (16 U.S.C. 1361 *et seq.*) and the Regulations Governing the Taking and Importing of Marine Mammals (50 CFR part 216).

The permit holder requested authorization to extend Permit No. 954–1517–01 for an additional 12 months. The new expiration date for the permit is December 31, 2002 and the permit number has been changed to No. 954–1517–02 to reflect that the permit has been amended.

Dated: April 10, 2002.

Ann D. Terbush,

Chief, Permits, Conservation and Education Division, Office of Protected Resources, National Marine Fisheries Service.

[FR Doc. 02–9351 Filed 4–16–02; 8:45 am]

BILLING CODE 3510–22–S

DEPARTMENT OF COMMERCE

National Oceanic and Atmospheric Administration

[I.D. 040302A]

Marine Mammals; File No. 555–1565–01

AGENCY: National Marine Fisheries Service (NMFS), National Oceanic and Atmospheric Administration (NOAA), Commerce.

ACTION: Issuance of permit amendment.

SUMMARY: Notice is hereby given that Dr. James T. Harvey (Principal Investigator, PI), Moss Landing Marine Laboratories, P.O. Box 450, Moss Landing CA 95039 has been issued an amendment to scientific research Permit No. 555–1565–00.

ADDRESSES: The amendment and related documents are available for review upon written request or by appointment in the following office(s):

Permits, Conservation and Education Division, Office of Protected Resources, NMFS, 1315 East-West Highway, Room 13705, Silver Spring, MD 20910; phone (301) 713–2289; fax (301) 713–0376;

Northwest Region, NMFS, 7600 Sand Point Way NE, BIN C15700, Bldg. 1, Seattle, WA 98115–0700; phone (206) 526–6150; fax (206) 526–6426;

Southwest Region, NMFS, 501 West Ocean Blvd., Suite 4200, Long Beach, CA 90802–4213; phone (562) 980–4001; fax (562) 980–4018.

FOR FURTHER INFORMATION CONTACT: Amy Sloan or Ruth Johnson, (301) 713–2289.

SUPPLEMENTARY INFORMATION: On January 8, 2002, notice was published in the **Federal Register** (67 FR 870) that an amendment of Permit No. 555–1565, issued September 29, 2000 (65 FR 60411), had been requested by the above-named individual. The requested amendment has been granted under the authority of the Marine Mammal Protection Act of 1972, as amended (16 U.S.C. 1361 *et seq.*), and the Regulations Governing the Taking and Importing of Marine Mammals (50 CFR part 216).

The amendment authorizes the Permit Holder to collect from the wild up to 8 harbor seals (*Phoca vitulina*) per year for use in captive feeding studies and release them back to the wild after approximately 6 months in captivity; conduct feeding experiments on 10 California sea lions (*Zalophus californianus*) per year undergoing rehabilitation; and harass up to 2000 California sea lions per year at haul-out sites throughout central California for scat collection.

Dated: April 10, 2002.

Ann D. Terbush,

Chief, Permits, Conservation and Education Division, Office of Protected Resources, National Marine Fisheries Service.

[FR Doc. 02–9352 Filed 4–16–02; 8:45 am]

BILLING CODE 3510–22–S

COMMITTEE FOR THE IMPLEMENTATION OF TEXTILE AGREEMENTS

Adjustment of Import Limits for Certain Cotton and Man-Made Fiber Textiles and Textile Products Produced or Manufactured in Indonesia

April 11, 2002.

AGENCY: Committee for the Implementation of Textile Agreements (CITA).

ACTION: Issuing a directive to the Commissioner of Customs adjusting limits.

EFFECTIVE DATE: April 18, 2002.

FOR FURTHER INFORMATION CONTACT: Ross Arnold, International Trade Specialist, Office of Textiles and Apparel, U.S. Department of Commerce, (202) 482–4212. For information on the quota status of these limits, refer to the Quota Status Reports posted on the bulletin boards of each Customs port, call (202) 927–5850, or refer to the U.S. Customs website at http://www.customs.gov. For information on embargoes and quota re-openings, refer to the Office of Textiles

and Apparel website at http://otexa.ita.doc.gov.

SUPPLEMENTARY INFORMATION:

Authority: Section 204 of the Agricultural Act of 1956, as amended (7 U.S.C. 1854); Executive Order 11651 of March 3, 1972, as amended.

The current limits for certain categories are being adjusted for swing and the adjustment allowed to certain apparel categories for traditional folklore products made of hand-loomed fabric.

A description of the textile and apparel categories in terms of HTS numbers is available in the CORRELATION: Textile and Apparel Categories with the Harmonized Tariff Schedule of the United States (see **Federal Register** notice 66 FR 65178, published on December 18, 2001). Also see 66 FR 63025, published on December 4, 2001.

J. Hayden Boyd,

Acting Chairman, Committee for the Implementation of Textile Agreements.

Committee for the Implementation of Textile Agreements

April 11, 2002.

Commissioner of Customs,
Department of the Treasury, Washington, DC 20229.

Dear Commissioner: This directive amends, but does not cancel, the directive issued to you on November 27, 2001, by the Chairman, Committee for the Implementation of Textile Agreements. That directive concerns imports of certain cotton, wool, man-made fiber, silk blend and other vegetable fiber textiles and textile products, produced or manufactured in Indonesia and exported during the twelve-month period which began on January 1, 2002 and extends through December 31, 2002

Effective on April 18, 2002, you are directed to adjust the limits for the categories listed below, as provided for under the Uruguay Round Agreement on Textiles and Clothing:

Category	Twelve-month restraint limit
Levels in Group I	
225	7,879,716 square meters.
314–O [2]	79,331,784 square meters.
317–O [3]/617/326–O [4]	33,010,430 square meters of which not more than 5,173,219 square meters shall be in Category 326–O.
331pt./631pt. [5]	1,421,897 dozen pairs.
334/335	348,819 dozen.
336/636	927,335 dozen.
338/339	1,708,744 dozen.
340/640	2,104,363 dozen.
341	1,308,067 dozen.
342/642	551,981 dozen.
345	611,939 dozen.
347/348	2,428,722 dozen.
351/651	717,576 dozen.
611–O [6]	4,201,444 square meters.
613/614/615	33,108,300 square meters.
618–O [7]	6,285,146 square meters.
625/626/627/628/629–O [8].	32,183,798 square meters.
634/635	441,586 dozen.
638/639	2,188,541 dozen.
641	3,145,368 dozen.
644	655,506 numbers.
645/646	1,164,842 dozen.
647/648	4,813,871 dozen.

[1] The limits have not been adjusted to account for any imports exported after December 31, 2001.

[2] Category 314–O: all HTS numbers except 5209.51.6015.

[3] Category 317–O: all HTS numbers except 5208.59.2085.

[4] Category 326–O: all HTS numbers except 5208.59.2015, 5209.59.0015 and 5211.59.0015.

[5] Category 331pt.: all HTS numbers except 6116.10.1720, 6116.10.4810, 6116.10.5510, 6116.10.7510, 6116.92.6410, 6116.92.6420, 6116.92.6430, 6116.92.6440, 6116.92.7450, 6116.92.7460, 6116.92.7470, 6116.92.8800, 6116.92.9400 and 6116.99.9510; Category 631pt.: all HTS numbers except 6116.10.1730, 6116.10.4820, 6116.10.5520, 6116.10.7520, 6116.93.8800, 6116.93.9400, 6116.99.4800, 6116.99.5400 and 6116.99.9530.

[6] Category 611–O: all HTS numbers except 5516.14.0005, 5516.14.0025 and 5516.14.0085.

[7] Category 618–O: all HTS numbers except 5408.24.9010 and 5408.24.9040.

[8] Category 625/626/627/628; Category 629–O: all HTS numbers except 5408.34.9085 and 5516.24.0085.

The Committee for the Implementation of Textile Agreements has determined that these actions fall within the foreign affairs exception to the rulemaking provisions of 5 U.S.C. 553(a)(1).

Sincerely,
J. Hayden Boyd,
Acting Chairman, Committee for the Implementation of Textile Agreements.

[FR Doc.02–9325 Filed 4–16–02; 8:45 am]

BILLING CODE 3510–DR–S

COMMITTEE FOR THE IMPLEMENTATION OF TEXTILE AGREEMENTS

Adjustment of Import Limits for Certain Cotton, Man-Made Fiber, Silk Blend and Other Vegetable Fiber Textile Products Produced or Manufactured in Sri Lanka

April 11, 2002.

AGENCY: Committee for the Implementation of Textile Agreements (CITA).

ACTION: Issuing a directive to the Commissioner of Customs adjusting limits.

EFFECTIVE DATE: April 18, 2002.

FOR FURTHER INFORMATION CONTACT: Roy Unger, International Trade Specialist, Office of Textiles and Apparel, U.S. Department of Commerce, (202) 482–4212. For information on the quota status of these limits, refer to the Quota Status Reports posted on the bulletin boards of each Customs port, call (202) 927–5850, or refer to the U.S. Customs website at http://www.customs.gov. For information on embargoes and quota reopenings, refer to the Office of Textiles and Apparel website at http://www.otexa.ita.doc.gov.

SUPPLEMENTARY INFORMATION:

Authority: Section 204 of the Agricultural Act of 1956, as amended (7 U.S.C. 1854); Executive Order 11651 of March 3, 1972, as amended.

The current limits for certain categories are being adjusted for carryforward used, swing, special shift and carryforward.

A description of the textile and apparel categories in terms of HTS numbers is available in the CORRELATION: Textile and Apparel Categories with the Harmonized Tariff Schedule of the United States (see **Federal Register** notice 66 FR 65178, published on December 18, 2001). Also see 66 FR 63035, published on December 4, 2001.

J. Hayden Boyd,

Acting Chairman, Committee for the Implementation of Textile Agreements.

Committee for the Implementation of Textile Agreements

April 11, 2002.

Commissioner of Customs,
Department of the Treasury, Washington, DC 20229.

Dear Commissioner: This directive amends, but does not cancel, the directive issued to you on November 27, 2001, by the Chairman, Committee for the Implementation of Textile Agreements. That directive concerns imports of certain cotton, wool, man-made fiber, silk blend and other vegetable fiber textiles and textile products, produced or manufactured in Sri Lanka and exported during the twelve-month period which began on January 1, 2002 and extends through December 31, 2002.

Effective on April 18, 2002, you are directed to adjusting the limits for the following categories, as provided for under the Uruguay Round Agreement on Textiles and Clothing:

Category	Adjusted twelve-month limit
338/339	1,909,288 dozen.

Category	Adjusted twelve-month limit\\
345/845	257,121 dozen.
347/348	2,211,880 dozen.
351/651	493,572 dozen.
359–C/659–C [2]	1,466,172 kilograms.
647/648	1,467,638 dozen.

[1] The limits have not been adjusted to account for any imports exported after December 31, 2001.

[2] Category 359–C: only HTS numbers 6103.42.2025, 6103.49.8034, 6104.62.1020, 6104.69.8010, 6114.20.0048, 6114.20.0052, 6203.42.2010, 6203.42.2090, 6204.62.2010, 6211.32.0010, 6211.32.0025 and 6211.42.0010; Category 659–C: only HTS numbers 6103.23.0055, 6103.43.2020, 6103.43.2025, 6103.49.2000, 6103.49.8038, 6104.63.1020, 6104.63.1030, 6104.69.1000, 6104.69.8014, 6114.30.3044, 6114.30.3054, 6203.43.2010, 6203.43.2090, 6203.49.1010, 6203.49.1090, 6204.63.1510, 6204.69.1010, 6210.10.9010, 6211.33.0010, 6211.33.0017 and 6211.43.0010.

The Committee for the Implementation of Textile Agreements has determined that these actions fall within the foreign affairs exception of the rulemaking provisions of 5 U.S.C. 553(a)(1).

Sincerely,

J. Hayden Boyd,

Acting Chairman, Committee for the Implementation of Textile Agreements.

[FR Doc. 02–9326 Filed 4–16–02; 8:45 a.m.

BILLING CODE 3510–DR–S

DEPARTMENT OF DEFENSE

Department of the Army

Notice of Availability of the Final Environmental Impact Statement (FEIS) for the Disposal of Chemical Munitions at Pueblo Chemical Depot, Colorado

AGENCY: Department of the Army, DoD.

ACTION: Notice of availability.

SUMMARY: This announces the availability of the FEIS which assesses the potential environmental impacts of the design, construction, operation and closure of a facility to destroy the chemical agent and munitions currently stored at the Pueblo Chemical Depot. The FEIS examines the potential environmental impacts of the following destruction facility alternatives: (1) Baseline incineration facility; (2) modified baseline incineration facility; (3) neutralization followed by supercritical water oxidation; (4) neutralization followed by biodegradation (preferred alternative); and (5) no action (i.e., continued storage of chemical munitions at Pueblo Chemical Depot). Although the no action alternatives is not viable under Public Law 99–145 (Department of Defense Authorization Act of 1986), it was analyzed to provide a comparison with the proposed action.

DATES: The waiting period on the FEIS will end 30 days after publication of the notice of availability in the **Federal Register** by the U.S. Environmental Protection Agency.

ADDRESSES: To obtain copies of the FEIS, contact the Program Manager for Chemical Demilitarization, Public Outreach and Information Office (ATTN: Ms. Sandra Clawson-Freeo), Building E–4585, Aberdeen Proving Ground, Maryland 21010–4005.

FOR FURTHER INFORMATION CONTACT: Ms. Sandra Clawson-Freeo at 410–436–1479, by fax at 410–436–5122, by electronic mail at Sandra.Clawson-Freeo@pmcd.apgea.army.mil or by mail at the above listed address.

SUPPLEMENTARY INFORMATION: In its Record of Decision on February 26, 1988 (53 FR 5816, February 26, 1988) for the Final Programmatic Environmental Impact Statement on the Chemical Stockpile Disposal Program (CSDP), the Department of the Army selected on-site disposal by incineration at all eight chemical munition storage sites located within the continental United States as the method by which it will destroy its lethal chemical stockpile. The Department of the Army published a Notice of Intent in the **Federal Register** (65 FR 20140–41, April 14, 2000) which provides notice that, pursuant to the National Environmental Policy Act and implementing regulations, it was preparing a draft site-specific EIS for the Pueblo Chemical Agent Disposal Facility. The Department of the Army published a Draft EIS to assess the site-specific health and environmental impacts of on-site disposal of the chemical agents and munitions stored at the Pueblo Chemical Depot on May 11, 2001 (66 FR 24136). All public comments received on the Draft EIS have been addressed in the FEIS.

The Program Manager for Assembled Chemical Weapons Assessment (ACWA) is preparing a separate EIS. The ACWA EIS is for follow-on pilot testing of the ACWA program pursuant to the process established by Congress in Public Laws 104–208 and 105–261. The ACWA EIS is distinct from this FEIS for the Pueblo Chemical Depot in that its emphasis is on the feasibility of pilot testing one or more of the ACWA technologies at one or more sites. One of the four sites evaluated in the ACWA EIS is the Pueblo Chemical Depot. The ACWA EIS does not specifically address the use of a full-scale facility to accomplish destruction of the inventory stored at Pueblo. Information provided by the ACWA program concerning the neutralization technologies provides the basis for analysis of the neutralization technologies and comparison with incineration is this site-specific FEIS for stockpile destruction at Pueblo. This Program Manager for Chemical Demilitarization FEIS and the ACWA EIS serve complementary but distinct purposes. This FEIS continues the process that began with Congress established the Program Manager for Chemical Demilitarization in 1985.

A decision on which of the alternatives will be implemented in carrying out destruction of the chemical munitions at Pueblo will be made by the Defense Acquisition Board (DAB) through a process that will consider a wide range of factors. The factors include, but are not limited to, environmental considerations, laws and regulations, mission needs (at Pueblo as well as from a national perspective), implications for compliance with the Chemical Weapons Convention, budget considerations, schedule, public concerns, and political concerns.

A Record of Decision will be made following the end of the 30–day review period.

Dated: April 1, 2002.

Raymond J. Fatz,

Deputy Assistant Secretary of the Army, (Environment, Safety and Occupational Health), OASA (I&E).

[FR Doc. 02–9266 Filed 4–16–02; 8:45 am]

BILLING CODE 3710–08–M

DEPARTMENT OF EDUCATION

Submission for OMB Review; Comment Request

AGENCY: Department of Education.

SUMMARY: The Leader, Regulatory Information Management Group, Office of the Chief Information Officer invites comments on the submission for OMB review as required by the Paperwork Reduction Act of 1995.

DATES: Interested persons are invited to submit comments on or before May 17, 2002.

ADDRESSES: Written comments should be addressed to the Office of Information and Regulatory Affairs, Attention: Karen Lee, Desk Officer, Department of Education, Office of Management and Budget, 725 17th Street, NW, Room 10235, New Executive Office Building, Washington, DC 20503 or should be electronically mailed to the internet address *Karen_F.lowbar;Lee@omb.eop.gov.*

SUPPLEMENTARY INFORMATION: Section 3506 of the Paperwork Reduction Act of 1995 (44 U.S.C. Chapter 35) requires

that the Office of Management and Budget (OMB) provide interested Federal agencies and the public an early opportunity to comment on information collection requests. OMB may amend or waive the requirement for public consultation to the extent that public participation in the approval process would defeat the purpose of the information collection, violate State or Federal law, or substantially interfere with any agency's ability to perform its statutory obligations. The Leader, Regulatory Information Management Group, Office of the Chief Information Officer, publishes that notice containing proposed information collection requests prior to submission of these requests to OMB. Each proposed information collection, grouped by office, contains the following: (1) Type of review requested, *e.g.* new, revision, extension, existing or reinstatement; (2) title; (3) summary of the collection; (4) description of the need for, and proposed use of, the information; (5) respondents and frequency of collection; and (6) reporting and/or Recordkeeping burden. OMB invites public comment.

Dated: April 11, 2002.

John Tressler,

Leader, Regulatory Information Management, Office of the Chief Information Officer.

Office of Educational Research and Improvement

Type of Review: New.

Title: Application for Improving Literacy Through School Libraries Grant Program.

Frequency: Annually.

Affected Public: State, Local, or Tribal Gov't, SEAs or LEAs.

Reporting and Recordkeeping Hour Burden:

Responses: 1,500.

Burden Hours: 45,000.

Abstract: The purpose of the program is to improve student literacy skills and academic achievement by providing increased access to up-to-date library materials, a well-equipped, technologically advanced school library media center and well-trained professionally certified school library media specialists.

This information collection is being submitted under the Streamlined Clearance Process for Discretionary Grant Information Collections (1890–0001). Therefore, the 30-day public comment period notice will be the only public comment notice published for this information collection.

Requests for copies of the proposed information collection request may be accessed from *http://edicsweb.ed.gov,* or should be addressed to Vivian Reese, Department of Education, 400 Maryland Avenue, SW, Room 4050, Regional Office Building 3, Washington, DC 20202–4651. Requests may also be electronically mailed to the Internet address *OCIO_IMG_Issues@ed.gov* or faxed to 202–708–9346. Please specify the complete title of the information collection when making your request.

Comments regarding burden and/or the collection activity requirements should be directed to Kathy Axt at her Internet address *Kathy.Axt@ed.gov.* Individuals who use a telecommunications device for the deaf (TDD) may call the Federal Information Relay Service (FIRS) at 1–800–877–8339.

[FR Doc. 02–9262 Filed 4–16–02; 8:45 am]

BILLING CODE 4000–01–P

DEPARTMENT OF ENERGY

[Number DE–PS07–02ID14323]

Plant Wide Assessments

AGENCY: Idaho Operations Office, DOE.

ACTION: Notice of availability of solicitation for awards of financial assistance.

SUMMARY: The U.S. Department of Energy (DOE), Idaho Operations Office (ID) is seeking cost shared applications for plant-wide assessments that will lead to substantial improvements in industrial energy efficiency, enhanced competitiveness and reduced environmental impacts. The objective is to continue industry participation in the Industry of the Future (IOF) Plant-Wide Opportunity Assessment Program. The industrial sites at which the assessment is conducted must fall within the Office of Industrial Technologies (OIT) Industry of the Future strategy areas. These include: Forest Products, Chemicals, Petroleum Refining, Steel, Aluminum, Metal Castings, Glass, Mining, and Agriculture.

DATES: The issuance date of Solicitation Number DE–PS07–02ID14323 will be on or about April 9, 2002. The deadline for receipt of applications is June 6, 2002, at 3 p.m. MDT.

ADDRESSES: The solicitation will be available in its full text on the Internet by going to the DOE's Industry Interactive Procurement System (IIPS) at the following URL address: *http://e-center.doe.gov.* This will provide the medium for disseminating solicitations and amendments to solicitations, receiving financial assistance applications and evaluating applications in a paperless environment. Completed applications are required to be submitted via IIPS. An IIPS ''User Guide for Contractors'' can be obtained on the IIPS Homepage and then click on the ''Help'' button. Questions regarding the operation of IIPS may be e-mailed to the IIPS Help Desk at *IIPS_HelpDesk@e-center.doe.gov.*

FOR FURTHER INFORMATION CONTACT: Trudy Harmel, Contract Specialist at *harmelta@id.doe.gov,* or Dallas L. Hoffer, Contracting Officer at *hofferdl@id.doe.gov.*

SUPPLEMENTARY INFORMATION: Information about the Office of Industrial Technologies Best Practices Program can be found at *http://www.oit.doe.gov/bestpractices.* The IOF industry-specific vision documents and technology roadmaps are available at *http://www.oit.doe.gov/* under individual IOF program areas.

DOE anticipates making 7 to 9 cooperative agreement awards, with total estimated DOE funding of up to $900K, with no individual award to exceed $100,000 and a project period of no more than one year. A minimum 50% non-federal cost share is required. Only industrial ''end-users'' are eligible to submit project proposals. ''End-users'' are defined as those companies who own and operate the facility that is the focus of the assessment. In addition to end-user participation, a project team may involve other partners including, but not limited to, design and consulting engineering firms, manufacturers, distributors, utilities, energy service companies, state energy offices, research institutions, etc. The statutory authority for the program is the Federal Non-Nuclear Energy Research and Development Act of 1974 (Pub. L. 93–577).

The Catalog of Federal Domestic Assistance (CFDA) Number for this program is 81.086.

Issued in Idaho Falls on April 9, 2002.

R.J. Hoyles,

Director, Procurement Services Division.

[FR Doc. 02–9275 Filed 4–16–02; 8:45 am]

BILLING CODE 6450–01–P

DEPARTMENT OF ENERGY

Bonneville Power Administration

[BPA File No. GI–02]

Proposed Adjustment to the ACS–02 Generation Imbalance Service Rate

AGENCY: Bonneville Power Administration (BPA), Department of Energy (DOE).

ACTION: Notice of Proposed Adjustment to the Rate for Generation Imbalance Service, Schedule ACS–02.

SUMMARY: By this notice, BPA's Transmission Business Line (TBL) announces its proposal to revise the ACS–02 Generation Imbalance Service rate (rate) found in its 2002 Transmission and Ancillary Service Rate Schedules. BPA proposes to eliminate the 100 mills per kilowatthour minimum rate for wind resources for imbalances that exceed the Generation Imbalance Deviation Band and where energy delivered in a schedule hour is less than the energy scheduled. The revision will remove an impediment to continued development of wind resources in the BPA Control Area.

DATES: A proposed schedule for the proceeding is supplied in Supplementary Information, Section I.B. Petitions to Intervene must be received by BPA at the address below no later than 12:00 noon on April 22, 2002. All references to timelines are Pacific prevailing time. At 10:00 a.m. on April 24, 2002, a scheduling conference will be held in the BPA Rate Hearing Room to discuss the proposed schedule. The rate adjustment proceeding will begin with a pre-hearing conference at 9:00 a.m. on April 25, 2002. Persons intending to intervene in the proceeding as a party must appear in person at the pre-hearing conference. Written comments by non-party participants must be received by BPA no later than 4:30 p.m. May 28, 2002, at the address below.

ADDRESSES: BPA File No. GI–02. BPA requests that all comments and documents intended to become a part of the Official Record in this proceeding refer to this file number.

Persons wishing to become a party to the proceeding must notify BPA in writing of their intention to do so. Petitions to Intervene as a party in the proceeding must be submitted to Judy Cornish, Hearing Clerk—L–7, Bonneville Power Administration, P.O. Box 3621, 905 NE 11th Ave., Portland, OR, 97208–3621. In addition, petitioners must concurrently serve a copy of their Petition to Intervene on BPA's Office of General Counsel, directed to Eric H. Carter, Bonneville Power Administration, Office of General Counsel—LT–7, P.O. Box 3621, 905 N.E. 11th Ave., Portland, OR, 97208–3621.

Written comments must be submitted to BPA Communications—KC–7, Comments, Bonneville Power Administration, P.O. Box 12999, Portland, Oregon 97212. Comments may also be sent by facsimile to (503) 230–3285, or by e-mail to *comment@bpa.gov.*

The pre-hearing conference on April 25, 2002, will be held in the BPA Rate Hearing Room, 2nd Floor, Room 223, 911 NE 11th Ave., Portland, Oregon. The Hearing Officer will establish a final schedule at the pre-hearing conference. During or after the pre-hearing conference the Hearing Officer will also issue orders addressing special rules of practice to govern the proceedings, document handling, and discovery.

BPA's Initial Proposal to revise the rate will be provided at the April 24th scheduling conference and at the April 25th pre-hearing conference and will be available for public viewing after that date at BPA's Public Information Center, BPA Headquarters Building, 1st Floor, 905 NE 11th Avenue, Portland, Oregon. The documents will also be available on BPA's Web site at *www.transmission.bpa.gov/giratecase.*

FOR FURTHER INFORMATION CONTACT: Information related to this proceeding may also be obtained by telephone at (503) 230–4413 or toll free at 1–800–622–4519. Ms. Mary A. Dalton, Transmission Rates Manager, is the official responsible for this rate case. Ms. Dalton may be contacted at P.O. Box 491, 5411 NE Hwy 99, Vancouver, WA 98663.

SUPPLEMENTARY INFORMATION:

Table of Contents

Part I: Introduction and Procedural Background
A. Relevant Statutory Provisions Governing This Rate Proceeding
B. Proposed Schedule Concerning This Rate Proceeding
Part II: Purpose and Scope of Hearing
A. The Circumstances Necessitating Adjustment
B. Scope
C. NEPA Evaluation
Part III: Public Participation
A. Distinguishing Between ''Participants'' and ''Parties''
B. Petitions for Intervention
C. Developing the Record
Part IV: Summary of the Proposal

Part I—Introduction and Procedural Background

The Pacific Northwest Electric Power Planning and Conservation Act (Northwest Power Act) provides that BPA must establish and periodically review its rates so that they are adequate to recover, in accordance with sound business principles, the costs associated with the acquisition, conservation, and transmission of electric power, and to recover the Federal investment in the Federal Columbia River Power System (FCRPS) and other costs incurred by BPA. Section 7(i) of the Northwest Power Act requires that BPA's rates be established based on the record in a formal hearing (proceeding).

By this notice, BPA's Transmission Business Line (TBL) announces its proposal to revise the ACS–02 Generation Imbalance Service rate (rate) found in its 2002 Transmission and Ancillary Service Rate Schedules. Generation Imbalance Service is taken when there is a difference between scheduled and actual energy delivered from a generation resource in the BPA Control Area during a schedule hour. The existing Generation Imbalance Service rate was established in BPA's 2002 Transmission and Ancillary Service rate proceeding and subsequently was approved by the Federal Energy Regulatory Commission (FERC) for use during the October 1, 2001 to September 30, 2003 rate period.[1] For imbalances outside the Generation Imbalance Deviation Band, the current rate charges the greater of: (i) BPA's incremental cost for energy, plus 10 percent, or (ii) 100 mills per kilowatthour when the actual energy delivered from a resource in a schedule hour is less than the energy scheduled for that hour. The 100 mills per kilowatthour minimum rate is designed to encourage accurate scheduling by generators. TBL proposes to eliminate the 100 mills per kilowatthour minimum rate when applying the rate to wind generation resources because wind generators are not currently able to accurately schedule their output during each delivery hour. This proposed change will result in the Generation Imbalance Service rate for wind resource imbalances outside the Deviation Band being BPA's incremental cost for energy plus 10 percent when delivered energy in an hour is less than scheduled energy. All other aspects of the existing Generation Imbalance Service rate are unchanged.

A. Relevant Statutory Provisions Governing This Rate Proceeding

Section 7 of the Northwest Power Act, 16 U.S.C. 839e, contains a number of general directives that the BPA Administrator must consider in establishing rates for the sale of electric energy and transmission capacity. In particular, section 7(a)(1), 16 U.S.C. 839e(a)(1), provides in part that:

> Such rates shall be established and, as appropriate, revised to recover, in accordance with sound business principles, the costs associated with the acquisition, conservation, and transmission of electric power, including the amortization of the Federal investment in the Federal Columbia River Power System

[1] FERC later approved BPA's request to accelerate the effective date to July 1, 2001.

(including irrigation costs required to be repaid out of power revenues) over a reasonable period of years and the other costs and expenses incurred by the Administrator pursuant to this Act and other provisions of law.

Rates established by BPA are effective on an interim or final basis when approved by the Federal Energy Regulatory Commission (FERC). 16 U.S.C. 839e(a)(2). In addition to the Northwest Power Act, BPA ratemaking is governed by the Federal Columbia River Transmission System Act, 16 U.S.C. 838 *et seq.*, and the Flood Control Act of 1944, 16 U.S.C. 825 *et seq.* The Federal Power Act, 16 U.S.C. 212(i)(1)(B)(ii), provides additional guidance regarding BPA's ratemaking.

Section 7(i) of the Northwest Power Act, 16 U.S.C. 839e(i), requires that BPA's rates be established according to certain procedures. These procedures include issuance of a **Federal Register** Notice announcing the proposed rates; one or more hearings; the opportunity to submit written views, supporting information, questions, or arguments; and a decision by the Administrator based on the record developed during the hearing process.

This proceeding is governed by the Procedures Governing Bonneville Power Administration Rate Hearings (BPA's Procedures), 51 FR 7611 (March 5, 1986), which implement and expand upon these statutory requirements.

Pursuant to Rule 1010.3(c) of BPA's Procedures, this hearing will be conducted as a 90-day Expedited Rate Proceeding under section 1010.10 of BPA's Procedures. The expedited procedures will be used rather than the procedures for General Rate Proceedings (Rule 1010.9), which are intended for use when the Administrator proposes to revise all, or substantially all, of BPA's wholesale power and transmission rates.

The Administrator has elected to do an expedited rate procedure because this proceeding is limited in scope, involves the revision of a single rate, and the rate revision adopted as a result of this proceeding, if any, will be in effect for one year, the remainder of the current rate period for BPA's 2002 Transmission and Ancillary Services Rate Schedules. A 90-day rate proceeding will be adequate to develop a full and complete record, and receive public comment and argument related to the proposed rate, upon which the Administrator will establish the final rate.

B. Proposed Schedule Concerning This Rate Proceeding

BPA expects to issue a final Record of Decision related to this rate revision on July 15, 2002. The following proposed schedule is provided for informational purposes. The Hearing Officer will establish a final schedule at the pre-hearing conference.

Date	Action
April 22	Deadline for Petitions to Intervene (Noon).
April 24	Scheduling Conference.
April 25	Pre-hearing Conference and Filing of BPA's Direct Case.
May 10	Parties File Direct Cases.
May 28	Close of Participant Comments.
May 31	Litigants File Rebuttal Testimony.
June 13	Cross-Examination.
June 18	Initial Briefs Filed.
June 28	BPA Files Draft Record of Decision.*
July 8	Parties File Briefs on Exceptions, if applicable.
July 15	Administrator Issues Final Record of Decision.

*Pursuant to 1010.10(c) of BPA's Procedures, oral argument will not be heard in expedited rate proceedings unleess all parties agree to subtitute Oral Arugment for a brief on exceptions.

The procedural schedule established for Docket No. GI–02 will provide an opportunity for interested persons to review BPA's proposed rate adjustment, to participate in the rate hearing, and to submit oral and written comments.

Part II—Purpose and Scope of Hearing

The purpose of the hearing is to revise the ACS–02 Generation Imbalance Service charge under BPA's 2002 Transmission and Ancillary Service Rate Schedules. BPA proposes to eliminate the 100 mills per kilowatthour minimum rate for wind resources for imbalances that exceed the Generation Imbalance Deviation Band and where energy delivered in a schedule hour is less than the energy scheduled.

A. The Circumstances Necessitating Adjustment

TBL's ACS–02 Ancillary Services and Control Area Services Rate Schedule includes a Control Area Service Rate for Generation Imbalance Service (*see* ACS–02, Section III.B). The current ACS–02 Generation Imbalance Service rate schedule charges the greater of BPA's incremental cost plus 10 percent or 100 mills per kilowatthour for imbalances outside the Deviation Band when the actual energy delivered from a resource in a schedule hour is less than the energy scheduled for that hour. The 100 mills per kilowatthour minimum charge is designed to encourage generators to operate their resources so that the difference between scheduled and actual energy delivered is within the Deviation Band. Wind resource developers and operators assert that they are not able to operate their resources to schedule with sufficient accuracy to avoid incurring substantial Generation Imbalance Service charges, and thus, wind resources cannot respond to this rate design. TBL's proposal to eliminate the 100 mills per kilowatthour minimum rate for wind resources in the ACS–02 Generation Imbalance Service rate would result in the rate for these imbalances being BPA's incremental cost plus 10 percent.

B. Scope

This section provides guidance to the Hearing Officer as to those matters that are within the scope of this transmission rate proceeding and those that are outside the scope of this proceeding.

Pursuant to Rule 1010.3(f) of BPA's Procedures, the Administrator directs the Hearing Officer to limit the scope of this hearing to the rate adjustment proposed herein. No other issues will be considered in this proceeding, including without limitation: (1) Issues related to any other rates adopted in BPA's 2002 Transmission and Ancillary Service rates proceeding; (2) other rates within the ACS–02 rate schedule; (3) aspects of the existing Generation Imbalance Service rate other than those relating to the rate adjustment proposed herein; (4) the General Rate Schedule Provisions; (5) revenue requirements; (6) rate design issues; (7) segmentation studies; and (8) transmission rate studies or other rate issues. Further, no issues relating to BPA's Open Access Transmission Tariff will be considered in this proceeding. The Hearing Officer will interpret the scope of this proceeding in the narrowest possible manner.

C. NEPA Evaluation

BPA has assessed the potential environmental effects of its rate proposal, as required by the National Environmental Policy Act (NEPA). In the Business Plan Environmental Impact Statement (Business Plan EIS) BPA evaluated the environmental impacts of a range of business structure alternatives that included, among other things, various combinations of rate designs and resulting rate levels for BPA's transmission services. In August 1995, the BPA Administrator issued a Record of Decision (Business Plan ROD) that adopted the Market-Driven Alternative from the Business Plan Final EIS completed in June 1995. In the Business Plan ROD, the Administrator committed to avoid the environmental impacts from new generation resources by not discouraging renewable resources. This rate proposal would reduce the

additional environmental impacts associated with non-renewable resources, and it would remove the unintended burden BPA's current Generation Imbalance Service rate structure imposes on wind resources. The impacts from these actions were examined in the Business Plan EIS. Therefore, BPA expects the proposal to revise the ACS–02 rate for Generation Imbalance Service under BPA's 2002 Transmission and Ancillary Service Rate Schedules will fall within the scope of the Market-Driven Alternative that was evaluated in the Final Business Plan EIS and adopted in the Business Plan ROD.

Part III—Public Participation

A. Distinguishing Between Participants and Parties

BPA distinguishes between ''participants in'' and ''parties to'' its ratemaking hearings. Apart from the formal hearing process, BPA will receive comments, views, opinions, and information from ''participants,'' who are defined in the BPA Procedures as persons who may submit comments without being subject to the duties of, or having the privileges of, parties. Participants' written comments will be made part of the official record and considered by the Administrator. Participants are not entitled to participate in the pre-hearing conference, may not cross examine parties' witnesses, seek discovery, or serve or be served with documents, and are not subject to the same procedural requirements as parties.

Written comments by participants will be included in the record if they are received by BPA on or before May 28, 2002. Participants' written views, supporting information, questions, and arguments should be submitted to the Hearing Clerk at the address listed in the **ADDRESSES** section of this Notice.

The second category of interest is that of a ''party'' as defined in Rules 1010.2 and 1010.4 of the BPA Procedures. 51 FR 7611 (1986). Parties may participate in any aspect of the hearing process after intervening in the proceeding as provided below.

B. Petitions for Intervention

Persons wishing to become a party to BPA's rate proceeding must notify BPA in writing of their interest. Petitioners may designate no more than two representatives upon whom service of documents will be made. Petitions to Intervene shall state the name and address of the person requesting party status and the person's interest in the hearing. Petitioners must also explain their interest in the outcome of the hearing in sufficient detail to permit the Hearing Officer to determine whether they have a relevant interest in the hearing to be a party. Finally, petitioners must state whether they intend to file a brief on exceptions.

Petitions to Intervene as a party in the rate proceeding are due to the Hearing Officer by 12 noon on April 22, 2002. Petitions to Intervene should be directed to the Hearing Clerk at the address specified in the **ADDRESSES** section of this Notice. A copy of the petition shall be served upon BPA's Office of General Counsel at the address specified in the **ADDRESSES** section of this Notice.

Pursuant to Rule 1010.1(d) of the BPA Procedures, BPA waives the requirement in Rule 1010.4(d) that an opposition to a Petition to Intervene be filed and served 24 hours before the pre-hearing conference. Any opposition to a Petition to Intervene may instead be made orally at the pre-hearing conference. Any party, including BPA, may oppose a Petition to Intervene. Persons who have been denied party status in any past BPA rate proceeding shall continue to be denied party status unless they establish a significant change of circumstances. The Hearing Officer will rule on all timely Petitions to Intervene at the pre-hearing conference. Late interventions are strongly disfavored. Oppositions to an untimely Petition to Intervene shall be filed and served on BPA within two days after service of the untimely petition.

C. Developing the Record

The hearing record will include, among other things, the transcripts of the hearing, written materials entered into the record by BPA and the parties, written comments from participants and other materials accepted into the record by the Hearing Officer. The Hearing Officer will then review, supplement (if necessary) and certify the record to the BPA Administrator for decision.

The Hearing Officer, at his discretion, may schedule reasonable opportunity for cross-examination following completion of the filing of all parties and BPA's direct cases, and rebuttal testimony. Parties will have the opportunity to file initial briefs at the close of the evidentiary portion of the hearing. Parties may file briefs on exceptions, or if all parties have previously agreed, oral argument may be substituted for briefs on exceptions. If oral argument is scheduled in lieu of briefs on exceptions, the argument will be transcribed and made part of the record. After the close of the hearing, and following submission of initial briefs, BPA will issue a Draft Record of Decision (ROD).

The Administrator will develop the final rate for Generation Imbalance Service based on the entire record, documents prepared pursuant to the National Environmental Policy Act and other statutes and such other material or information as may have been submitted to or developed by the Administrator. The basis for the final adjustment will be expressed in the Administrator's Final ROD, which shall be issued July 15, 2002. The Administrator will serve copies of the Final ROD on all parties and will file the final proposed rate adjustment, together with the record, with the Federal Energy Regulatory Commission for confirmation and approval.

BPA must continue to meet with customers in the ordinary course of business during the rate proceeding. To comport with section 1010.7 of BPA's Procedural Rules on *ex parte* communications, BPA will provide notice of meetings involving rate proceeding issues to provide an opportunity for participation by all parties to the proceeding. Such meetings may be held on short notice and parties should be prepared to devote necessary resources to fully participate in every aspect of the rate proceeding.

Part IV—Summary of the Proposal

BPA proposes to revise the rate for Generation Imbalance Service by eliminating the 100 mills per kilowatthour floor rate when actual energy is less than scheduled energy for wind generation resources. The revision will remove an impediment to continued development of wind resources in the BPA Control Area.

Below is the proposed adjustment to the Generation Imbalance Service rate. The proposed revision to the rate is the addition of the second sentence in the first paragraph of section III.B.1.b.(i), below (in *italics*). All capitalized terms have the meaning accorded them in TBL's Open Access Transmission Tariff and 2002 Transmission and Ancillary Service Rate Schedules. TBL intends to seek FERC approval of the revised rate beginning October 1, 2002 and intends the revised rate to remain in effect until September 30, 2003, the expiration date of BPA's 2002 Transmission and Ancillary Service Rate Schedules.

Schedule ACS–02 Ancillary Services and Control Area Services Rate

Section III. Control Area Service Rates

B. Generation Imbalance Service

The rates below apply to generation resources in the BPA Control Area if

Generation Imbalance Service is provided for in an interconnection agreement or other arrangement. Generation Imbalance Service is taken when there is a difference between scheduled and actual energy delivered from generation resources in the BPA Control Area during a schedule hour. The rates for this service differ depending upon whether the Generation Imbalance occurs within the Generation Imbalance Deviation Band or outside the Generation Imbalance Deviation Band. The Generation Imbalance Deviation Band is + or −1.5% of the scheduled amount of energy, or 2 MW, whichever is larger (absolute value).

1. Rates

a. For Imbalance Within the Generation Imbalance Deviation Band

BPA–TBL will maintain a deviation account showing the net Generation Imbalance (the sum of positive and negative deviations from schedule for each hour). Return energy must be scheduled to bring the deviation account balance to zero each month. BPA–TBL will designate the hours and amounts of return energy for each hour that will be scheduled. The customer shall make the arrangements and submit the schedule for the balancing transaction.

b. For Imbalance Outside the Generation Imbalance Deviation Band

i. When energy delivered in a schedule hour by the generation resource, *not including wind generation resources,* is less than the energy scheduled, the charge will be the greater of: (I) BPA's incremental cost plus 10%, or (ii) 100 mills per kilowatthour. *When energy delivered in a schedule hour by a wind generation resource is less than the energy scheduled, the charge will be BPA's incremental cost plus 10%.*

BPA's incremental cost will be based on an hourly energy index in the PNW, if one exists. If one does not exist, an alternative index will be based on: The Dow-Jones Mid-Columbia, California PX, or NYMEX Mid-Columbia index prices. On September 30 each year, BPA–TBL will post on the OASIS the index to be used for the ensuing fiscal year.

ii. When energy delivered by the generation resource is greater than the scheduled amount, a credit equal to 90% of BPA's decremental cost may be given for deviations.

2. Billing Factors

For each hour a Generation Imbalance occurs, the Billing Factor for the rates specified in section 1.b. for Imbalance Outside the Generation Imbalance Deviation Band, is:

a. The amount of energy that the customer delivers, in kilowatthours, less than the lower limit of the Generation Imbalance Deviation Band, or

b. The amount of energy the customer delivers, in kilowatthours, in excess of the upper limit of the Generation Imbalance Deviation Band. No credit will be given for an energy difference if: (a) The imbalance was an Intentional Deviation (as determined by BPA–TBL); or (b) the Federal System was in a Spill Condition at any time during the month.

Issued in Portland, Oregon, this 3rd day of April, 2002.

Stephen J. Wright,

Administrator and Chief Executive Officer, Bonneville Power Administration.

[FR Doc. 02–9274 Filed 4–16–02; 8:45 am]

BILLING CODE 6450–01–P

DEPARTMENT OF ENERGY

Federal Energy Regulatory Commission

[Docket No. RP99–301–048]

ANR Pipeline Company; Notice of Negotiated Rate Filing

April 11, 2002.

Take notice that on April 5, 2002, ANR Pipeline Company (ANR), tendered for filing one IPLS Service Agreement and a description of the essential conditions involved in agreeing to a Negotiated Rate Arrangement. ANR requests that the Commission approve the Negotiated Rate Arrangements to be retroactively effective on May 1, 2002.

ANR states that the filed Negotiated Rate Arrangement reflects a negotiated rate between ANR and AEP Energy Services, Inc. for transportation service, under one transportation agreement for a period to be effective beginning May 1, 2002 for a primary term of ten (10) years thereafter.

Any person desiring to be heard or to protest said filing should file a motion to intervene or a protest with the Federal Energy Regulatory Commission, 888 First Street, NE., Washington, DC 20426, in accordance with sections 385.214 or 385.211 of the Commission's Rules and Regulations. All such motions or protests must be filed in accordance with section 154.210 of the Commission's Regulations. Protests will be considered by the Commission in determining the appropriate action to be taken, but will not serve to make protestants parties to the proceedings. Any person wishing to become a party must file a motion to intervene. Copies of this filing are on file with the Commission and are available for public inspection. This filing may also be viewed on the Web at *http://www.ferc.gov* using the ''RIMS'' link, select ''Docket#'' and follow the instructions (call 202–208–2222 for assistance). Comments, protests and interventions may be filed electronically via the Internet in lieu of paper. *See*, 18 CFR 385.2001(a)(1)(iii) and the instructions on the Commission's Web site under the ''e-Filing'' link.

Linwood A. Watson, Jr.,

Deputy Secretary.

[FR Doc. 02–9290 Filed 4–16–02; 8:45 am]

BILLING CODE 6717–01–P

DEPARTMENT OF ENERGY

Federal Energy Regulatory Commission

[Docket No. PR02–14–000]

Bridgeline Gas Distribution LLC; Notice of Petition for Rate Approval

April 11, 2002.

Take notice that on March 29, 2002, Bridgeline Gas Distribution LLC (Bridgeline) filed pursuant to section 284.123(b)(2) of the Commission's regulations, a petition for rate approval requesting that the Commission approve the proposed rates as fair and equitable for transportation and storage services performed under section 311 of the Natural Gas Policy Act of 1978 (NGPA). Bridgeline proposes an effective date of March 29, 2002.

Bridgeline states that it is a local distribution company with a blanket certificate issued in Docket No. CP93–190 authorizing it to engage in NGPA Section 311 services as if it were an intrastate pipeline. Bridgeline owns and operates transportation and storage facilities in the State of Louisiana.

Pursuant to section 284.123(b)(2)(ii), if the Commission does not act within 150 days of the date of this filing, the rates will be deemed to be fair and equitable and not in excess of an amount which interstate pipelines would be permitted to charge for similar transportation service. The Commission may, prior to the expiration of the 150 day period, extend the time for action or institute a proceeding to afford parties an opportunity for written comments and for the oral presentation of views, data, and arguments.

Any person desiring to participate in this rate proceeding must file a motion to intervene or protest with the Federal Energy Regulatory Commission, 888

First Street, NE., Washington DC 20426, in accordance with sections 385.214 or 385.211 of the Commission's rules and regulations. All such motions or protests must be filed with the Secretary of the Commission on or before April 26, 2002. Protests will be considered by the Commission in determining the appropriate action to be taken, but will not serve to make protestants parties to the proceedings. Any person wishing to become a party must file a motion to intervene. This petition for rate approval is on file with the Commission and are available for public inspection. This filing may also be viewed on the web at *http://www.ferc.gov* using the ''RIMS'' link, select ''Docket#'' and follow the instructions (call 202–208–2222 for assistance). Comments, protests and interventions may be filed electronically via the Internet in lieu of paper. See, 18 CFR 385.2001(a)(1)(iii) and the instructions on the Commission's web site under the ''e-Filing'' link.

Linwood A. Watson, Jr.,

Deputy Secretary.

[FR Doc. 02–9287 Filed 4–16–02; 8:45 am]

BILLING CODE 6717–01–P

DEPARTMENT OF ENERGY

Federal Energy Regulatory Commission

[Docket No. CP02–142–000]

Columbia Gas Transmission Corporation; Notice of Application

April 11, 2002.

Take notice that on April 5, 2002, Columbia Gas Transmission Corporation (Columbia), 12801 Fair Lakes Parkway, Fairfax, Virginia 22030–0146, filed in Docket No. CP02–142–000, an application, pursuant to sections 7(b) and (c) of the Natural Gas Act (NGA) and part 157 of the Commission's Regulations for abandonment authorization and a certificate of public convenience and necessity authorizing the construction and operation of certain natural gas transmission facilities in Pennsylvania to provide firm transportation service (FTS) under part 284 of the Commission's Regulations for Rock Springs Generation, LLC (Rock Springs) and CED Rock Springs, Inc. (CEDRS) (together, ''Customer''), all as more fully set forth in the application which is on file with the Commission and open to public inspection.

Columbia proposes to abandon 8.6 miles of 14-inch pipeline and replace it with 8.6 miles of 24-inch pipeline in Chester County, Pennsylvania, between its Eagle and Downingtown Compressor Stations. It is stated that Columbia will use this pipeline to transport up to 270,000 Dekatherms (dt) per day of natural gas to the Customer's power plant to be located in Rock Springs, Cecil County, Maryland, in order to serve the fuel requirements of the power plant and to serve future electric demand requirements. Columbia states that it has signed contracts with Rock Springs and CEDRS to transport gas for a term of 20 years, delivering 135,000 dt of gas per day to each. It is asserted that the replacement of the line will enhance reliability and flexibility for Columbia's existing customers through the creation of additional capacity during off-peak periods. Columbia will make deliveries to the Customer using the existing Rock Springs Meter Station which was constructed by Columbia under the automatic provisions of its blanket certificate and paid for by the Customer.

Columbia estimates the cost of the project at $15,059,400 and requests rolled-in rate treatment for the cost, asserting that the project satisfies the requirements of the Commission's Pricing Policy Statement for new construction. Columbia requests that a certificate be issued by October 1, 2002, in order to begin service by April 1, 2003.

Any questions regarding this application should be directed to Fredric J. George, Certificates, at (304)357–2359, Columbia Gas Transmission Company, P.O. Box 1273, Charleston, West Virginia 25325–1273.

There are two ways to become involved in the Commission's review of this project. First, any person wishing to obtain legal status by becoming a party to the proceedings for this project should, on or before May 2, 2002, file with the Federal Energy Regulatory Commission, 888 First Street, NE., Washington, DC 20426, a motion to intervene in accordance with the requirements of the Commission's Rules of Practice and Procedure (18 CFR 385.211 and 385.214) and the regulations under the NGA (18 CFR 157.10). A person obtaining party status will be placed on the service list maintained by the Secretary of the Commission and will receive copies of all documents filed by the applicant and by all other parties. A party must submit 14 copies of filings made with the Commission and must mail a copy to the applicant and to every other party in the proceeding. Only parties to the proceeding can ask for court review of Commission orders in the proceeding. Comments and protests may be filed electronically via the internet in lieu of paper. See 18 CFR 385.2001(a)(1)(iii) and the Commission's website at *http://www.ferc.fed.us/efi/doorbell.htm*.

Persons who wish to comment only on the environmental review of this project should submit an original and two copies of their comments to the Secretary of the Commission. Environmental commenters will be placed on the Commission's environmental mailing list, will receive copies of environmental documents, and will be able to participate in meetings associated with the Commission's environmental review process. Commenters will not be required to serve copies of filed documents on all other parties. However, Commenters will not receive copies of all documents filed by other parties or issued by the Commission, and will not have the right to seek rehearing or appeal the Commission's final order to a Federal court.

The Commission will consider all comments and concerns equally, whether filed by commenters or those requesting intervenor status.

The Commission may issue a preliminary determination on non-environmental issues prior to the completion of its review of the environmental aspects of the project. This preliminary determination typically considers such issues as the need for the project and its economic effect on existing customers of the applicant, on other pipelines in the area, and ion landowners and communities. For example, the Commission considers the extent to which the applicant may need to exercise eminent domain to obtain rights-of-way for the proposed project and balances that against the non-environmental benefits to be provided by the project. Therefore, if a person has comments on community and landowner impacts from this proposal, it is important to file comments or to intervene as early in the process as possible.

If the Commission decides to set the application for a formal hearing before an Administrative Law Judge, the Commission will issue another notice describing that process. At the end of the Commission's review process, a final Commission order approving or denying a certificate will be issued.

Linwood A. Watson, Jr.,

Deputy Secretary.

[FR Doc. 02–9283 Filed 4–16–02; 8:45 am]

BILLING CODE 6717–01–P

DEPARTMENT OF ENERGY

Federal Energy Regulatory Commission

[Docket Nos. RP00–469–003 and RP01–22–005]

East Tennessee Natural Gas Company; Notice of Compliance Filing

April 11, 2002.

Take notice that on March 27, 2002, East Tennessee Natural Gas Company (East Tennessee) tendered for filing as part of its FERC Gas Tariff, Original Volume No. 1, the revised tariff sheets listed on Appendix A and Appendix B of the filing.

East Tennessee states that the purpose of this filing is to comply with the Commission's January 30, 2002 Order on East Tennessee's Order No. 637 Settlement.

East Tennessee states that copies of its filing have been mailed to all parties on the official service lists compiled by the Secretary of the Commission in these proceedings.

Any person desiring to protest said filing should file a protest with the Federal Energy Regulatory Commission, 888 First Street, NE., Washington, DC 20426, in accordance with section 385.211 of the Commission's Rules and Regulations. All such protests must be filed in accordance with section 154.210 of the Commission's Regulations. Protests will be considered by the Commission in determining the appropriate action to be taken, but will not serve to make protestants parties to the proceedings. Copies of this filing are on file with the Commission and are available for public inspection. This filing may also be viewed on the web at *http://www.ferc.gov* using the ''RIMS'' link, select ''Docket#'' and follow the instructions (call 202–208–2222 for assistance). Comments, protests and interventions may be filed electronically via the Internet in lieu of paper. See, 18 CFR 385.2001(a)(1)(iii) and the instructions on the Commission's web site under the ''e-Filing'' link.

Linwood A. Watson, Jr.,

Deputy Secretary.

[FR Doc. 02–9291 Filed 4–16–02; 8:45 am]

BILLING CODE 6717–01–P

DEPARTMENT OF ENERGY

Federal Energy Regulatory Commission

[Docket No. RP96–320–056]

Gulf South Pipeline Company, LP; Notice of Negotiated Rate Filing

April 11, 2002.

Take notice that on April 4, 2002, Gulf South Pipeline Company, LP (Gulf South) tendered for filing contracts between Gulf South and the following company for disclosure of a recently negotiated rate transaction. As shown on the contract, Gulf South requests an effective date of April 1, 2002.

Special Negotiated Rate Between Gulf South Pipeline Company, LP and Reliant Entergy Entex

Gulf South states that it has served copies of this filing upon all parties on the official service list created by the Secretary in this proceeding

Any person desiring to be heard or to protest said filing should file a motion to intervene or a protest with the Federal Energy Regulatory Commission, 888 First Street, NE., Washington, DC 20426, in accordance with Sections 385.214 or 385.211 of the Commission's Rules and Regulations. All such motions or protests must be filed in accordance with Section 154.210 of the Commission's Regulations. Protests will be considered by the Commission in determining the appropriate action to be taken, but will not serve to make protestants parties to the proceedings. Any person wishing to become a party must file a motion to intervene. Copies of this filing are on file with the Commission and are available for public inspection. This filing may also be viewed on the web at *http://www.ferc.gov* using the ''RIMS'' link, select ''Docket#'' and follow the instructions (call 202–208–2222 for assistance). Comments, protests and interventions may be filed electronically via the Internet in lieu of paper. See, 18 CFR 385.2001(a)(1)(iii) and the instructions on the Commission's web site under the ''e-Filing'' link.

Linwood A. Watson, Jr.,

Deputy Secretary.

[FR Doc. 02–9289 Filed 4–16–02; 8:45 am]

BILLING CODE 6717–01–P

DEPARTMENT OF ENERGY

Federal Energy Regulatory Commission

[Docket No. RP02–129–000]

Southern LNG Inc.; Notice of Informal Settlement Conference

April 11, 2002.

Take notice that an informal settlement conference will be convened in these proceedings on May 1, 2002 commencing at 10 a.m. at the offices of the Federal Energy Regulatory Commission, 888 First Street, NE., Washington, D.C., 20426, for the purpose of exploring the possible settlement of the issues and drafting possible settlement documents in this proceeding.

Any party, as defined by 18 CFR 385.102(c), or any participant as defined by 18 CFR 385.102(b), is invited to attend. Persons wishing to become a party must move to intervene and receive intervenor status pursuant to the Commission's regulations (18 CFR 385.214).

For additional information, contact Marc G. Denkinger (202) 208–2215 or Daniel R. Simon (202) 208–1125.

Linwood A. Watson, Jr.,

Deputy Secretary.

[FR Doc. 02–9293 Filed 4–16–02; 8:45 am]

BILLING CODE 6717–01–P

DEPARTMENT OF ENERGY

Federal Energy Regulatory Commission

[Docket No. RP96–312–069]

Tennessee Gas Pipeline Company; Notice of Negotiated Rates

April 11, 2002.

Take notice that on April 5, 2002, Tennessee Gas Pipeline Company (Tennessee), tendered for filing a notice of a change in the rates for the October 18, 2001 Negotiated Rate Agreement between Tennessee and NJR Energy Services (Negotiated Rate Agreement) which was accepted by the Commission in *Tennessee Gas Pipeline Company,* 97 FERC ¶ 61,248 (2001) (November 30 Order). As agreed to in the November 30 Order, Tennessee is providing notice of substitution of a fixed price effective May 1, 2002.

Any person desiring to be heard or to protest said filing should file a motion to intervene or a protest with the Federal Energy Regulatory Commission, 888 First Street, NE., Washington, DC 20426, in accordance with sections

385.214 or 385.211 of the Commission's Rules and Regulations. All such motions or protests must be filed in accordance with section 154.210 of the Commission's Regulations. Protests will be considered by the Commission in determining the appropriate action to be taken, but will not serve to make protestants parties to the proceedings. Any person wishing to become a party must file a motion to intervene. Copies of this filing are on file with the Commission and are available for public inspection. This filing may also be viewed on the web at *http://www.ferc.gov* using the ''RIMS'' link, select ''Docket#'' and follow the instructions (call 202–208–2222 for assistance). Comments, protests and interventions may be filed electronically via the Internet in lieu of paper. See, 18 CFR 385.2001(a)(1)(iii) and the instructions on the Commission's web site under the ''e-Filing'' link.

Linwood A. Watson, Jr.,

Deputy Secretary.

[FR Doc. 02–9288 Filed 4–16–02; 8:45 am]

BILLING CODE 6717–01–P

DEPARTMENT OF ENERGY

Federal Energy Regulatory Commission

[Docket No. RP02–225–000]

Texas Gas Transmission Corporation; Notice of Proposed Changes in FERC Gas Tariff

April 11, 2002.

Take notice that on April 5, 2002, Texas Gas Transmission Corporation (Texas Gas) tendered for filing as part of its FERC Gas Tariff, First Revised Volume No. 1, the following tariff sheet to become effective March 31, 2002:

First Revised Sheet No. 0

Texas Gas states that the purpose of this filing is to update the title page of Texas Gas's FERC Gas Tariff, First Revised Volume No. 1, to reflect a recent change in organizational structure and reporting responsibility.

Any person desiring to be heard or to protest said filing should file a motion to intervene or a protest with the Federal Energy Regulatory Commission, 888 First Street, NE, Washington, DC 20426, in accordance with sections 385.214 or 385.211 of the Commission's Rules and Regulations. All such motions or protests must be filed in accordance with section 154.210 of the Commission's Regulations. Protests will be considered by the Commission in determining the appropriate action to be taken, but will not serve to make protestants parties to the proceedings. Any person wishing to become a party must file a motion to intervene. Copies of this filing are on file with the Commission and are available for public inspection. This filing may also be viewed on the Web at *http://www.ferc.gov* using the ''RIMS'' link, select ''Docket#'' and follow the instructions (call 202–208–2222 for assistance). Comments, protests and interventions may be filed electronically via the Internet in lieu of paper. *See*, 18 CFR 385.2001(a)(1)(iii) and the instructions on the Commission's Web site under the ''e-Filing'' link.

Linwood A. Watson, Jr.,

Deputy Secretary.

[FR Doc. 02–9294 Filed 4–16–02; 8:45 am]

BILLING CODE 6717–01–P

DEPARTMENT OF ENERGY

Federal Energy Regulatory Commission

[Docket No. CP02–141–000]

Transcontinental Gas Pipe Line Corporation; Notice of Application

April 11, 2002.

Take notice that on April 4, 2002, Transcontinental Gas Pipe Line Corporation (Transco), P. O. Box 1396, Houston, Texas 77251–1096, filed in Docket No. CP02–141–000 an application pursuant to Section 7(b) of the Natural Gas Act (NGA) and the rules and regulations of the Federal Energy Regulatory Commission (Commission), for an order permitting and approving the abandonment by sale of certain pipeline facilities known as the South Texas Pipeline Facilities located in onshore Texas in Bee, Brooks, DeWitt, Duval, Goliad, Hidalgo, Jackson, Jim Hogg, Jim Wells, Kleberg, LaSalle, Live Oak, McMullen, Nueces, Refugio, San Patricio, Starr, Victoria, Wharton, Willacy, and Zapata Counties, all as more fully set forth in the application which is on file with the Commission and open to public inspection. The filing may be viewed on the web at *http://www.rimsweb1.ferc.fed.us/rims.q?rp2~intro* (call 202–208–2222 for assistance).

Transco states that it proposes to abandon by sale to Enbridge Pipelines (Texas Intrastate) Inc. (Enbridge), an intrastate pipeline entity not affiliated with Transco, a 100 percent interest in the South Texas Pipeline Facilities. Transco requests that the Commission determine that, upon sale of the South Texas Pipeline Facilities to Enbridge, neither the facilities nor the services provided by Enbridge utilizing the facilities will be subject to the Commission's Natural Gas Act jurisdiction.

Transco states that since its principal role is that of a transporter, it no longer requires its extensive gathering facilities to provide gas sales. Moreover, it states that most of its customers purchase gas at Transco's pooling points, not at the wellhead. As a result, Transco states that it has reevaluated its facilities and services in order to position itself to compete effectively as a transporter in this changed environment. Transco's states that it has determined to sell or spindown those facilities historically relied on primarily to perform a gas supply gathering function.

Transco states that it thus offered for sale all of its onshore transmission and gathering facilities upstream of its station 30 compressor station. According to Transco, while various parties submitted bids for portions of the assets being offered for sale, it determined that Enbridge's bid was the most attractive overall package. Transco notes that, in addition to its jurisdictional facilities, certain non-jurisdictional gathering laterals contiguous to the McMullen lateral portion of the South Texas Pipeline Facilities will be simultaneously transferred to Enbridge by WFS Gathering Company (WFS Gathering) and Goebel Gathering Company (Goebel), which are gathering affiliates of Transco. Additional, Transco states that WFS Gathering has already sold and transferred to Enbridge the non-jurisdictional facilities upstream of the Tilden Plant. Transco states that all of these non-jurisdictional facilities were spundown to WFS Gathering and Goebel by Transco pursuant to the Commission order authorizing the transfer in Docket No. CP98–236–000. It states that Enbridge is purchasing these gathering laterals according to separate Purchase and Sale Agreements with WFS Gathering and Goebel.

Specifically, Transco states that it proposes to abandon by sale to Enbridge the following South Texas Pipeline Facilities:

1. Mainline A from Mile Post 0.00 to Mile Post 258.40, which consists of 37.63 miles of 10-inch pipeline, 41.26 miles of 14-inch pipeline, 99.99 miles of 24-inch pipeline, and 79.49 miles of 26-inch pipeline;

2. Station 20, located at Mile Post 170.25 on Mainline A near Refugio, Texas, which is a 8800 horsepower compressor station;

3. Starr lateral and loop, which consists of 23.17 miles of 10-inch

pipeline and 10.10 miles of 20-inch pipeline;

4. North Rucias lateral, which consists of 6.5 miles of 8-inch pipeline;

5. Driscoll lateral, which consists of 10.86 miles of 6-inch pipeline and 22.35 miles of 8-inch pipeline;

6. LaGloria lateral and loop, which consists of 4.53 miles of 10-inch pipeline and 3.47 miles of 12-inch pipeline, respectively;

7. McMullen lateral, which consists of 139.05 miles of 24-inch pipeline from Tilden Junction in McMullen County, Texas, to Station 30 in Wharton County, Texas; and

8. Several meter stations, valves, miscellaneous tie-in piping, and other related appurtenances along the above pipeline segments.

Transco states that the South Texas Pipeline Facilities also include any other equipment, tangible personal property and related meter station facilities (but excluding all Excluded Property, as defined in the Purchase and Sale Agreement, attached as Exhibit U to the application), which is used by Transco in connection with the operation of the South Texas Pipeline Facilities.

Transco states that it has agreed to sell its 100 percent interest in the South Texas Pipeline Facilities to Enbridge for $32.8 million. It states that the cost to Enbridge will compensate Transco for the total estimated net book value of the assets at the time of closing, including the unamortized balance of the purchase price that was assigned to these assets when Williams purchased Transco in 1995. Transco further states that closing of the sale of the facilities is contingent upon receipt of the a determination from the Commission that upon their sale to Enbridge, neither the facilities nor the services provided by Enbridge through the facilities will be subject to the Commission's Natural Gas Act jurisdiction.

According to Transco, abandonment of the facilities will not require physical removal of any facilities. However, Transco states that it will make all necessary piping modifications and Enbridge will install the necessary metering equipment at Station 30 required to separate Enbridge's facilities from Transco's pipeline system. Transco further states that the abandonment will have no impact on the daily design capacity of, or operating conditions on, Transco's system.

Transco contends that approval of the abandonment will enable Enbridge to further develop and grow its intrastate pipeline system in Texas to provide competitive gathering, transportation, and gas processing services, as well as greatly expand market access to the producers currently connected to both the South Texas Pipeline Facilities and the North Padre Island Lateral. It states that at the same time, approval will allow Williams to shed facilities which are no longer associated with its primary service functions, and will ultimately result in reduced costs for its customers by the removal of these facilities from the cost of service rate base.

Transco states that Enbridge has represented that, after acquisition, it will use the South Texas Pipeline Facilities only for intrastate transportation or transportation pursuant to Section 311(a)(1) of the Natural Gas Policy Action of 1978.

Transco states that two of its customers (Sun Company, Inc. And Coastal Eagle Point Oil Company) are currently entitled to Part 284 firm transportation service from certain receipt points that are proposed to be abandoned. In an effort to effectuate the transfer of facilities so that neither customer is adversely affected, Transco states that it and Enbridge and willing to offer alternative arrangements to the shippers to provide continued service. In that regard, Transco states that Enbridge is willing to offer continued service form these receipt points to Transco's Station 30 delivery point, pursuant to the terms and conditions of its Statement of General Terms and Conditions, which will be filed with the Texas Railroad Commission in the near future. Transco, therefore, seeks authorization to partially abandon service to Sun and Coastal under their existing FT service agreements by removing the affected receipt points that will no longer be available from Transco. It states that all other provisions of the FT service agreements would remain unaffected. Upon Commission authorization of its abandonment application, Transco states that it will amend the two firm service agreements to delete the affected receipt points.

In addition to the two shippers noted above, Transco states that IT shippers on the North Padre Island Lateral will be required to make arrangements with Enbridge should they desire to sell their gas into the Transco markets at Station 30 or other points downstream.[1] Transco contends that Enbridge has represented that continuing transportation service for these shippers will be available under the terms and conditions of its Statement of General Terms and Conditions, which will be filed with the Texas Railroad Commission in the near future. Transco states that Enbridge also anticipates that the additional markets it intends to attach to these assets through new construction and connection with its existing assets will offer new marketing opportunities for the North Padre Island shippers.

Transco further states that receipt and delivery points on nine certificate transportation X-rate schedule service agreements, which are no subject to pre-granted abandonment authorization, are also affected. According to Transco, there has been no gas flow recorded under any of these agreements since 1992. It states that upon abandonment and transfer of the facilities to Enbridge, the referenced receipt and delivery points will no longer be available to be used under the affected certificated agreements. Transco states that it has notified the affected parties in writing of its intent to terminate and abandon the certificated service. Transco requests abandonment authorization to the extent necessary to terminate services under the affected rate schedules and contracts.

Any questions regarding this application should be directed to Gisela B. Cherches, Transcontinental Gas Pipe Line Corporation, P. O. Box 1396, Houston, Texas 77251–1396 or call (713) 215–2000. In addition, Transco states that it will establish a toll-free telephone number so that interested parties can call with questions about the Momentum project.

There are two ways to become involved in the Commission's review of this project. First, any person wishing to obtain legal status by becoming a party to the proceedings for this project should, on or before May 2, 2002, file with the Federal Energy Regulatory Commission, 888 First Street, NE., Washington, DC 20426, a motion to intervene in accordance with the requirements of the Commission's Rules of Practice and Procedure (18 CFR 385.214 or 385.211) and the Regulations under the NGA (18 CFR 157.10). A person obtaining party status will be placed on the service list maintained by the Secretary of the Commission and will receive copies of all documents filed by the applicant and by all other parties. A party must submit 14 copies of filings made with the Commission and must mail a copy to the applicant and to every other party in the proceeding. Only parties to the

[1] Transco states that there are currently six shippers on the North Padre Island Lateral: Cinergy Marketing and Trading, LLC, Coral Energy Resources, L.P., Dynegy Gas Transportation, Inc., Superior Natural Gas Corporation, Upstream Energy Services Company, and Transco Energy Marketing Company.

proceeding can ask for court review of Commission orders in the proceeding.

However, a person does not have to intervene in order to have comments considered. The second way to participate is by filing with the Secretary of the Commission, as soon as possible, an original and two copies of comments in support of or in opposition to this project. The Commission will consider these comments in determining the appropriate action to be taken, but the filing of a comment alone will not serve to make the filer a party to the proceeding. The Commission's rules require that persons filing comments in opposition to the project provide copies of their protests only to the party or parties directly involved in the protest.

Comments, protests and interventions may be filed electronically via the Internet in lieu of paper. See, 18 CFR385.2001(a)(1)(iii) and the instructions on the Commission's web site under the ''e-filing'' link.

If the Commission decides to set the application for a formal hearing before an Administrative Law Judge, the Commission will issue another notice describing that process. At the end of the Commission's review process, a final Commission order approving or denying the abandonment will be issued.

Linwood A. Watson, Jr.,

Deputy Secretary.

[FR Doc. 02–9282 Filed 4–16–02; 8:45 am]

BILLING CODE 6717–01–P

DEPARTMENT OF ENERGY

Federal Energy Regulatory Commission

[Docket No. CP02–134–000]

Transwestern Pipeline Company; Notice of Application

April 5, 2002.

Take notice that on April 2, 2002, Transwestern Pipeline Company (Transwestern), 1400 Smith Street, Houston, Texas 77002–7361, filed in Docket No. CP02–134–000, a certificate of public convenience and necessity application, pursuant to section 7 (c) of the Natural Gas Act (NGA) for authorization to add capacity on its San Juan lateral in New Mexico and Colorado, all as more fully set forth in the application which is on file with the Commission and open to public inspection. This filing may be viewed on the Web at *http://www.ferc.gov* using the ''RIMS'' link, select ''Docket # '' from the RIMS menu and follow the instructions (call (202)208–2222 for assistance).

Transwestern proposes to add an incremental 10,000 Dekatherms of capacity on a daily, year-round basis to the existing San Juan lateral, which extends from Transwestern's LaPlata ''A'' Compressor Station in LaPlata County, Colorado, to a point on Transwestern's mainline near Thoreau, New Mexico. Transwestern states that the capacity will be made available as the result of installation of air-cooling facilities at Transwestern's Bloomfield Compressor Station, located in San Juan County, New Mexico. It is stated that Transwestern is installing the air-cooling facilities under section 2.55 of the Commission's Regulations for the purpose of obtaining more efficient and economical operation of the gas turbine units at the Bloomfield Compressor Station. It is asserted that the existing capacity of the San Juan lateral is fully subscribed and that the additional capacity would be available for sale on a long-term basis and would enable Transwestern to respond to increasing market demand. It is explained that Transwestern proposes to hold an open season for commitments for the additional capacity.

Any questions regarding this application should be directed to Robert B. Kilmer, Vice President, Rates and Certificates, Transwestern Gas Transmission Company, at 713–853–6160.

There are two ways to become involved in the Commission's review of this project. First, any person wishing to obtain legal status by becoming a party to the proceedings for this project should, on or before April 15, 2002, file with the Federal Energy Regulatory Commission, 888 First Street, NE., Washington, DC 20426, a motion to intervene in accordance with the requirements of the Commission's Rules of Practice and Procedure (18 CFR 385.211 and 385.214) and the regulations under the NGA (18 CFR 157.10). A person obtaining party status will be placed on the service list maintained by the Secretary of the Commission and will receive copies of all documents filed by the applicant and by all other parties. A party must submit 14 copies of filings made with the Commission and must mail a copy to the applicant and to every other party in the proceeding. Only parties to the proceeding can ask for court review of Commission orders in the proceeding. Comments and protests may be filed electronically via the Internet in lieu of paper. *See* 18 CFR 385.2001(a)(1)(iii) and the Commission's Web site at *http://www.ferc.fed.us/efi/doorbell.htm*.

Persons who wish to comment only on the environmental review of this project should submit an original and two copies of their comments to the Secretary of the Commission. Environmental commenters will be placed on the Commission's environmental mailing list, will receive copies of environmental documents, and will be able to participate in meetings associated with the Commission's environmental review process. Commenters will not be required to serve copies of filed documents on all other parties. However, Commenters will not receive copies of all documents filed by other parties or issued by the Commission, and will not have the right to seek rehearing or appeal the Commission's final order to a Federal court.

The Commission will consider all comments and concerns equally, whether filed by commenters or those requesting intervenor status.

The Commission may issue a preliminary determination on non-environmental issues prior to the completion of its review of the environmental aspects of the project. This preliminary determination typically considers such issues as the need for the project and its economic effect on existing customers of the applicant, on other pipelines in the area, and ion landowners and communities. For example, the Commission considers the extent to which the applicant may need to exercise eminent domain to obtain rights-of-way for the proposed project and balances that against the non-environmental benefits to be provided by the project. Therefore, if a person has comments on community and landowner impacts from this proposal, it is important to file comments or to intervene as early in the process as possible.

If the Commission decides to set the application for a formal hearing before an Administrative Law Judge, the Commission will issue another notice describing that process. At the end of the Commission's review process, a final Commission order approving or denying a certificate will be issued.

Magalie R. Salas,

Secretary.

[FR Doc. 02–9256 Filed 4–16–02; 8:45 am]

BILLING CODE 6717–01–P

DEPARTMENT OF ENERGY

Federal Energy Regulatory Commission

[Docket No. RP00–585–001]

Vector Pipeline L.P.; Notice of Compliance Filing

April 11, 2002.

Take notice that on April 8, 2002, Vector Pipeline L.P. (Vector), tendered for filing revised pro forma tariff sheets to its FERC Gas Tariff, Volume No. 1, to become effective upon issuance of a Commission order. Vector states that the purpose of this filing is to submit tariff sheets in compliance with Commission requirements in Order Nos. 637, *et seq.*

Vector states that it has tendered revised pro forma tariff sheets supplementing its September 29, 2000 submittal to address the following matters, as required in Order No. 637 and subsequent orders: segmentation and flexible receipt and delivery points, penalties and penalty crediting, operational flow orders, and capacity release.

Any person desiring to protest said filing should file a protest with the Federal Energy Regulatory Commission, 888 First Street, NE., Washington, DC 20426, in accordance with Section 385.211 of the Commission's Rules and Regulations. All such protests must be filed in accordance with Section 154.210 of the Commission's Regulations. Protests will be considered by the Commission in determining the appropriate action to be taken, but will not serve to make protestants parties to the proceedings. Copies of this filing are on file with the Commission and are available for public inspection. This filing may also be viewed on the web at *http://www.ferc.gov* using the ''RIMS'' link, select ''Docket#'' and follow the instructions (call 202–208–2222 for assistance). Comments, protests and interventions may be filed electronically via the Internet in lieu of paper. See, 18 CFR 385.2001(a)(1)(iii) and the instructions on the Commission's web site under the ''e-Filing'' link.

Linwood A. Watson, Jr.,

Deputy Secretary.

[FR Doc. 02–9292 Filed 4–15–02; 8:45 am]

BILLING CODE 6717–01–P

DEPARTMENT OF ENERGY

Federal Energy Regulatory Commission

[Docket No. RP02–226–000]

Williams Gas Pipelines Central, Inc.; Notice of Proposed Changes in FERC Gas Tariff

April 11, 2002.

Take notice that on April 5, 2002, Williams Gas Pipelines Central, Inc. (Williams) tendered for filing as part of its FERC Gas Tariff, Original Volume No. 1, the following tariff sheet to become effective March 31, 2002:

First Revised Sheet No. 0

Williams states that the purpose of this filing is to update the title page of Williams' FERC Gas Tariff, Original Volume No. 1, to reflect a recent change in organizational structure and reporting responsibility.

Any person desiring to be heard or to protest said filing should file a motion to intervene or a protest with the Federal Energy Regulatory Commission, 888 First Street, NE., Washington, DC 20426, in accordance with Sections 385.214 or 385.211 of the Commission's Rules and Regulations. All such motions or protests must be filed in accordance with Section 154.210 of the Commission's Regulations. Protests will be considered by the Commission in determining the appropriate action to be taken, but will not serve to make protestants parties to the proceedings. Any person wishing to become a party must file a motion to intervene. Copies of this filing are on file with the Commission and are available for public inspection. This filing may also be viewed on the web at *http://www.ferc.gov* using the ''RIMS'' link, select ''Docket#'' and follow the instructions (call 202–208–2222 for assistance). Comments, protests and interventions may be filed electronically via the Internet in lieu of paper. See, 18 CFR 385.2001(a)(1)(iii) and the instructions on the Commission's web site under the ''e-Filing'' link.

Linwood A. Watson, Jr.,

Deputy Secretary.

[FR Doc. 02–9295 Filed 4–15–02; 8:45 am]

BILLING CODE 6717–01–P

DEPARTMENT OF ENERGY

Federal Energy Regulatory Commission

[Docket No. EC02–61–000, et al.]

Duke Energy Murray, LLC., et al.; Electric Rate and Corporate Regulation Filings

April 10, 2002.

Take notice that the following filings have been made with the Commission. Any comments should be submitted in accordance with Standard Paragraph E at the end of this notice.

1. Duke Energy Murray, LLC

[Docket No. EC02–61–000]

Take notice that on April 5, 2002, Duke Energy Murray, LLC (Duke Murray or Applicant) filed with the Federal Energy Regulatory Commission (Commission) an application pursuant to Section 203 of the Federal Power Act for authorization of a disposition of jurisdictional facilities whereby Duke Murray will transfer to the Tennessee Valley Authority (TVA) certain transmission components of the Loopers Farm 230 kV Substation, which is located near Duke Murray's 1240 MW generating facility in Murray County, Georgia (the Facility) and which will interconnect a portion of the Facility to the TVA transmission system. In accordance with the terms of an interconnection agreement that will be executed between Duke Murray and TVA, the disposition will be accomplished through a bill of sale. Because TVA is a federal agency, authorization for TVA's purchase of the jurisdictional facilities is not required.

Comment Date: April 26, 2002.

2. La Rosita Energy, B.V.

[Docket No. EG02–113–000]

Take notice that La Rosita Energy, B.V. (La Rosita Energy), tendered for filing with the Federal Energy Regulatory Commission (Commission), an application for determination of exempt wholesale generator status pursuant to Part 365 of the Commission's regulations.

Applicant proposes to own or operate, or both own and operate, natural gas-fired electric generating facilities with an aggregate capacity of approximately 1,060 megawatts (along with certain appurtenant interconnected transmission facilities and an adjacent sewage treatment plant to supply water to the facilities), located near the city of Mexicali in the state of Baja California, Mexico. All output from the generating facilities will be sold exclusively at wholesale.

Comment Date: May 1, 2002.

3. Duke Power, a Division of Duke Energy Corporation

[Docket No. ER96–110–008]

Take notice that on January 23, 2002, Duke Power, a Division of Duke Energy Corporation tendered for filing with the Federal Energy Regulatory Commission (Commission), a letter committing it will treat Engage Energy America LLC and Frederickson Power L.P. as affiliates pending and following the consummation of the Duke Energy/Westcoast transaction.

Comment Date: April 23, 2002.

4. Duke Energy Oakland, LLC

[Docket No. ER01–3034–003]

Take notice that on April 3, 2002, Duke Energy Oakland, LLC (DEO) tendered for filing a copy of its refund report in compliance with the Commission's order in this proceeding, dated February 1, 2002.

Comment Date: April 24, 2002.

5. PJM Interconnection, L.L.C.

[Docket No. ER02–1440–000]

Take notice that on April 4, 2002, PJM Interconnection, L.L.C. (PJM) supplemented its March 29, 2002 filing in this docket by tendering for filing the executed signature page of the PJM West Reliability Assurance Agreement among Load Serving Entities in the PJM West Region (RAA West) for FirstEnergy Solutions Corp.

PJM requests an effective date of April 1, 2002 for FirstEnergy Solutions Corp.''s the RAA West signature page, consistent with the April 1, 2002 implementation date of RAA West and the requested effective date for the signature pages previously filed in this docket.

PJM states that it served a copy of its filing on all parties to the RAA West, including the parties for which a signature page is being tendered with this filing, the PJM members, and each of the state electric regulatory commissions within the PJM region.

Comment Date: April 25, 2002.

6. Xcel Energy Services Inc.

[Docket No. ER02–1467–000]

Take notice that on April 2, 2002 Xcel Energy Services Inc. (XES), on behalf of Public Service Company of Colorado (Public Service), submitted for filing a Service Agreement between Public Service and Energy USA–TPC Corp., which is an umbrella service agreement under Public Service's Rate Schedule for Market-Based Power Sales (FERC Electric Tariff, First Revised Volume No. 6). XES requests that this agreement become effective on March 19, 2002.

Comment Date: April 23, 2002.

7. Public Service Company of New Mexico

[Docket No. ER02–1468–000]

Take notice that on April 2, 2002, Public Service Company of New Mexico (PNM) submitted for filing an executed copy of a Wholesale Power Purchase Agreement (Agreement) dated February 28, 2001 between PNM and Tri-State Generation and Transmission Association, Inc. (Tri-State). The Agreement is being filed as Service Agreement No. 32 under PNM's FERC Electric Tariff, First Revised Volume No. 3 (Power and Energy Sales Tariff), and sets forth the terms and conditions under which PNM and Tri-State will exchange energy and under which PNM will purchase surplus energy from Tri-State. PNM's filing is available for public inspection at its offices in Albuquerque, New Mexico.

Copies of this filing have been served upon Tri-State, the New Mexico Public Regulation Commission, and the New Mexico Attorney General.

Comment Date: April 23, 2002.

8. Western Resources, Inc.

[Docket No. ER02–1469–000]

Take notice that on April 2, 2002, Western Resources, Inc. (WR) (d.b.a. Westar Energy) tendered for filing with the Federal Energy Regulatory Commission (Commission) a Service Agreement between WR and the Southeastern Power Administration (SEPA). WR states that the purpose of this agreement is to permit SEPA to take service under WR's Market Based Power Sales Tariff on file with the Commission. This agreement is proposed to be effective March 20, 2002.

Copies of the filing were served upon SEPA and the Kansas Corporation Commission.

Comment Date: April 23, 2002.

9. KeySpan Glenwood Energy Center LLC

[Docket No. ER02–1470–000]

Take notice that on April 2, 2002, KeySpan-Glenwood Energy Center LLC (Glenwood) tendered for filing pursuant to section 205 of the Federal Power Act its proposed FERC Electric Tariff No. 1.

Glenwood seeks authority to sell energy and capacity, as well as ancillary services, at market-based rates, together with certain waivers and preapprovals. Glenwood also seeks authority to sell, assign, or transfer transmission rights that it may acquire in the course of its marketing activities. Glenwood requests waiver of the Commission's 60-day notice requirement to allow an effective date of April 15, 2002 for its proposed rate schedule.

Comment Date: April 23, 2002.

10. Tampa Electric Company

[Docket No. ER02–1471–000]

Take notice that on April 2, 2002, Tampa Electric Company (Tampa Electric) filed notices of cancellation of its qualifying facility transmission service agreement and related interconnection agreement with Mulberry Phosphates, Inc. (Mulberry). Tampa Electric proposes that the cancellations be made effective on April 1, 2002.

Copies of the filing have been served on Mulberry and the Florida Public Service Commission.

Comment Date: April 23, 2002.

11. Entergy Services, Inc.

[Docket No. ER02–1472–000]

Take notice that on April 2, 2002, Entergy Services, Inc., on behalf of Entergy Gulf States, Inc., tendered for filing an unexecuted, amended and restated Interconnection and Operating Agreement with Cottonwood Energy Company, LP (Cottonwood), and an updated Generator Imbalance Agreement with Cottonwood (the First Revised Interconnection Agreement).

Comment Date: April 23, 2002.

12. Florida Power & Light Company

[Docket No. ER02–1473–000]

Take notice that on April 2, 2002, Florida Power & Light Company (FPL) filed a Power Sales Agreement between FPL and Florida Municipal Power Agency.

Comment Date: April 23, 2002.

13. Virginia Electric and Power Company

[Docket No. ER02–1474–000]

Take notice that on April 3, 2002, Virginia Electric and Power Company (Dominion Virginia Power) tendered for filing an execute Generator Interconnection and Operating Agreement (Interconnection Agreement) with Industrial Power Generating Corporation (Ingenco). The Interconnection Agreement sets forth the terms and conditions governing the interconnection between Ingenco's generating facility and Dominion Virginia Power's transmission system.

Dominion Virginia Power requests that the Federal Energy Regulatory Commission (Commission) waive its notice of filing requirements and accept this filing to make the Interconnection Agreement effective on May 24, 2000. Copies of the filing were served upon Ingenco and the Virginia State Corporation Commission.

Comment Date: April 24, 2002.

14. Troy Energy, LLC

[Docket No. ER02–1475–000]

Take notice that on April 3, 2002, Troy Energy, LLC (the Company) tendered for filing the following Service Agreement by Troy Energy, LLC to Dominion Energy Marketing, Inc., designated as Service Agreement No 1 under the Company's Market-Based Rate Tariff, FERC Electric Tariff, Original Volume No. 1, effective on December 1, 2001. The Company requests an effective date of April 2, 2002, as requested by the customer.

Copies of the filing were served upon the Dominion Energy Marketing, Inc., the Virginia State Corporation Commission, and the North Carolina Utilities Commission.

Comment Date: April 24, 2002.

15. Pleasants Energy, LLC

[Docket No. ER02–1476–000]

Take notice that on April 3, 2002, Pleasants Energy, LLC (the Company) tendered for filing the following Service Agreement by Pleasants Energy, LLC to Dominion Energy Marketing, Inc., designated as Service Agreement No 2 under the Company's Market-Based Rate Tariff, FERC Electric Tariff, Original Volume No. 1, effective on December 1, 2001. The Company requests an effective date of March 20, 2002, as requested by the customer.

Copies of the filing were served upon the Dominion Energy Marketing, Inc., the Virginia State Corporation Commission, and the North Carolina Utilities Commission.

Comment Date: April 24, 2002.

16. Western Resources, Inc.

[Docket No. ER02–1477–000]

Take notice that on April 3, 2002, Western Resources, Inc. (WR) (d.b.a. Westar Energy) tendered for filing a Service Agreement between WR and the East Texas Electric Cooperative, Inc. (ETEC). WR states that the purpose of this agreement is to permit ETEC to take service under WR's Market Based Power Sales Tariff on file with the Federal Energy Regulatory Commission (Commission) Commission. This agreement is proposed to be effective April 12, 2002.

Copies of the filing were served upon ETEC and the Kansas Corporation Commission.

Comment Date: April 24, 2002.

17. Duke Energy Oakland, LLC

[Docket No. ER02–1478–000]

Take notice that on April 3, 2002, Duke Energy Oakland, LLC (DEO) tendered for filing a Third Revised Sheet No. 151 and First Revised Sheet No. 157 to DEO's FERC Electric Rate Schedule No. 2. DEO states that these sheets are filed to amend (1) the Variable O&M Rate reflected in Schedule C, Table C1–18, and (2) the mmBtu figure for Unit No. 1 in schedule D, Table D–1. DEO requests an effective date of January 1, 2002, for these revisions.

Copies of this filing were served upon the California ISO, General Counsel, 151 Blue Ravine Road, Folsom, California 95630, and the Public Utilities Commission of the State of California, Suite 3105, 505 Van Ness Avenue, San Francisco, California 94102.

Comment Date: April 24, 2002.

18. PG&E Dispersed Generating Company, LLC

[Docket No. ER02–1479–000]

Take notice that on April 3, 2002, PG&E Dispersed Generating Company, LLC (PG&E Dispersed Gen) tendered for filing a service agreement for power sales (Service Agreement) with its affiliate, RAMCO, INC. (RAMCO) pursuant to which PG&E Dispersed Gen will sell electric wholesale services to RAMCO at market-based rates according to its FERC Electric Tariff, Original Volume No. 1.

Comment Date: April 24, 2002.

19. Virginia Electric and Power Company

[Docket No. ER02–1480–000]

Take notice that on April 3, 2002, Virginia Electric and Power Company (Dominion Virginia Power) tendered for filing with the Federal Energy Regulatory Commission (Commission) an executed Generator Interconnection and Operating Agreement (Interconnection Agreement) with Industrial Power Generating Corporation (Ingenco). The Interconnection Agreement sets forth the terms and conditions governing the interconnection between Ingenco's generating facility and Dominion Virginia Power's transmission system.

Dominion Virginia Power requests that the Commission waive its notice of filing requirements and accept this filing to make the Interconnection Agreement effective on February 1, 2001. Copies of the filing were served upon Ingenco and the Virginia State Corporation Commission.

Comment Date: April 24, 2002.

20. Progress Energy on Behalf of Carolina Power & Light Company

[Docket No. ER02–1481–000]

Take notice that on April 3, 2002, Carolina Power & Light Company (CP&L) tendered for filing Service Agreements for Non-Firm and Short-Term Firm Point-to-Point Transmission Service with Progress Ventures, Inc. Service to this Eligible Customer will be in accordance with the terms and conditions of the Open Access Transmission Tariff filed on behalf of CP&L.

CP&L is requesting an effective date of March 7, 2002 for these Service Agreements. A copy of the filing was served upon the North Carolina Utilities Commission and the South Carolina Public Service Commission.

Comment Date: April 24, 2002.

21. New England Power Company

[Docket No. ER02–1482–000]

Take notice that on April 3, 2002, New England Power Company (NEP) submitted for filing First Revised Service Agreement No. 178 for service under NEP's Open Access Transmission Tariff, FERC Electric Tariff, Second Revised Volume No. 9 between NEP and Middleborough Municipal Gas & Electric Department (Middleborough).

NEP states that a copy of this filing has been served upon Middleborough and all appropriate state regulators.

Comment Date: April 24, 2002.

22. Progress Energy, Inc. on Behalf of Florida Power Corporation

[Docket No. ER02–1483–000]

Take notice that on April 3, 2002, Florida Power Corporation (FPC) filed a Service Agreement with Old Dominion Electric Cooperative under FPC's Short-Form Market-Based Wholesale Power Sales Tariff (SM–1), FERC Electric Tariff No. 10.

FPC is requesting an effective date of March 10, 2002, for this Agreement. A copy of this filing was served upon the Florida Public Service Commission and the North Carolina Utilities Commission.

Comment Date: April 24, 2002.

23. Public Service Electric and Gas Company

[Docket No. ER02–1484–000]

Take notice that on April 4, 2002, Public Service Electric and Gas Company (PSE&G) submitted for filing an executed Interconnection and Operating Agreement, dated April 3, 2002, between Public Service Electric and Gas Company and PSE&G Fossil LLC.

PSE&G requests an effective date of April 1, 2002. Copies of PSE&G's filing have been served upon the New Jersey Board of Public Utilities.

Comment Date: April 25, 2002.

24. Power Contract Finance, L.L.C.

[Docket No. ER02–1485–000]

Take notice that on April 4, 2002, Power Contract Finance, L.L.C. (PCF), filed with the Federal Energy Regulatory Commission an application for approval of its initial tariff (FERC Electric Tariff Original Volume No. 1), and for blanket approval for market-based rates pursuant to Part 35 of the Commission's regulations.

PCF is a limited liability company formed under the laws of Delaware. PCF does not own any generating facilities.

Comment Date: April 25, 2002.

25. Cogen Technologies NJ Venture

[Docket No. ER02–1486–000]

Take notice that on April 4, 2002, Cogen Technologies NJ Venture (Cogen Technologies), filed with the Federal Energy Regulatory Commission an application for approval of its initial tariff (FERC Electric Tariff Original Volume No. 1), and for blanket approval for market-based rates pursuant to Part 35 of the Commission's regulations.

Cogen Technologies is a joint venture formed under the laws of New Jersey. NJ Venture owns and operates a 177–MW cogeneration facility located in Bayonne, New Jersey.

Comment Date: April 25, 2002.

26. Midwest Independent Transmission System Operator, Inc.

[Docket No. ER02–1487–000]

Take notice that on April 4, 2002, Midwest Independent Transmission System Operator, Inc. (Midwest ISO) pursuant to section 205 of the Federal Power Act and section 35.13 of the Federal Energy Regulatory Commission's (Commission) regulations, 18 CFR 35.13 submitted for filing Service Agreements for the transmission service requested by Powerex Corp.

A copy of this filing was sent to Powerex Corp.

Comment Date: April 25, 2002.

27. STI Capital Company

[Docket No. ER02–1488–000]

Take notice that on April 4, 2002, STI Capital Company tendered for filing with the Federal Energy Regulatory Commission (Commission) the long-term service agreement between SIT Capital Company and Fenton LLC and Bowles LLC.

Comment Date: April 25, 2002.

28. Perryville Energy Partners, L.L.C.

[Docket No. ER02–1489–000]

Take notice that on April 4, 2002, Perryville Energy Partners, L.L.C. tendered for filing with the Federal Energy Regulatory Commission (Commission), a First Revised Tolling Agreement between Perryville Energy Partners, L.L.C. and Mirant Americas Energy Marketing, L.P. The filing is made pursuant to Perryville Energy Partners, L.L.C.''s authority to sell power at market-based rates under its Market-Based Rates Tariff, FERC Electric Tariff Original Volume No. 1, approved by the Commission May 3, 2001 in Docket No. ERO1–1397–000.

Comment Date: April 25, 2002.

29. Kentucky Utilities Company

[Docket No. ER02–1490–000]

Take notice that on April 4, 2002, Kentucky Utilities Company (KU) tendered for filing executed amendments for 21 contracts with full requirements municipal customers of KU. The amendment provides for a modification of the Method of Reimbursement language for contracts where the municipal utilities are allocated power from the Southeastern Power Administration (SEPA). The amendment adds language that provides for third party participation in the procurement and distribution of SEPA power allocated to the municipal utilities and the resulting billing credits that the municipal utilities will receive. The amendment also specifically requires the municipal utilities to bear all the risk of non-payment by the third party.

Comment Date: April 25, 2002.

30. Kentucky Utilities Company

[Docket No. ER02–1491–000]

Take notice that on April 4, 2002, Louisville Gas and Electric/Kentucky Utilities Company (LG&E/KU) filed a termination notice for power sales service between LG&E/KU and FirstEnergy Solutions Corp. The terminated services agreement was accepted by the FERC in Docket No. ER98–1274.

Comment Date: April 25, 2002.

31. Kansas Gas and Electric Company

[Docket No. ES02–21–001]

Take notice that on April 3, 2002, Kansas Gas and Electric Company submitted an amendment to its original application in this proceeding, pursuant to section 204 of the Federal Power Act. The amendment seeks authorization to pledge first mortgage bonds to secure an aggregate of $500 million worth of short-term debt securities, rather than $1.0 billion, issued by Western Resources.

Comment Date: May 1, 2002.

32. Kansas Gas and Electric Company

[Docket No. ES02–22–001]

Take notice that on April 3, 2002, Kansas Gas and Electric Company (KG&E) submitted an amendment to its original application in this proceeding, pursuant to section 204 of the Federal Power Act. The amendment seeks authorization to eliminate the request for medium-term securities and to clarify that the authorization requested to pledge first mortgage bonds would apply only to KG&E's short-term securities. KG&E states the proposed short-term debt securities would maintain and/or replace the existing revolving credit facility of Western Resources in the aggregate principal amount of $500 million.

Comment Date: May 1, 2002.

33. Western Resources, Inc.

[Docket No. ES02–23–001]

Take notice that on April 3, 2002, Western Resource, Inc. submitted an amendment to its original application in this proceeding, pursuant to section 204 of the Federal Power Act. The amendment seeks authorization to eliminate the request for medium-term securities and to clarify that the authorization requested to pledge first mortgage bonds would apply only to Western Resources, Inc.''s short-term securities. Western Resources, Inc. states the proposed short-term debt securities would maintain and/or replace its existing revolving credit facility in the aggregate principal amount of $500 million.

Comment Date: May 1, 2002.

34. Vineland Cogeneration

[Docket No. QF90–176–004]

Take notice that on April 4, 2002, Vineland Cogeneration Limited Partnership, 536 West Elmer Road, Vineland, NJ 08360, filed with the Federal Energy Regulatory Commission (Commission) an application for recertification of a facility as a qualifying cogeneration facility pursuant to section 292.207(b) of the Commission's regulations.

The Commission previously certified the facility as a qualifying cogeneration facility in Docket No. QF90–176–001. Recertification is sought to reflect a change in the upstream ownership interests in the facility. The facility is interconnected with and supplies electric power to the Vineland Municipal Electric Utility.

Comment Date: April 30, 2002.

Standard Paragraph

E.Any person desiring to be heard or to protest such filing should file a

motion to intervene or protest with the Federal Energy Regulatory Commission, 888 First Street, NE, Washington, DC 20426, in accordance with Rules 211 and 214 of the Commission's Rules of Practice and Procedure (18 CFR 385.211 and 385.214). All such motions or protests should be filed on or before the comment date. Protests will be considered by the Commission in determining the appropriate action to be taken, but will not serve to make protestants parties to the proceeding. Any person wishing to become a party must file a motion to intervene. Copies of this filing are on file with the Commission and are available for public inspection. This filing may also be viewed on the Web at *http://www.ferc.gov* using the ''RIMS'' link, select ''Docket#'' and follow the instructions (call 202–208–2222 for assistance). Comments, protests and interventions may be filed electronically via the Internet in lieu of paper. *See*, 18 CFR 385.2001(a)(1)(iii) and the instructions on the Commission's Web site under the ''e-Filing'' link.

Magalie R. Salas,

Secretary.

[FR Doc. 02–9252 Filed 4–16–02; 8:45 am]

BILLING CODE 6717–01–P

DEPARTMENT OF ENERGY

Federal Energy Regulatory Commission

[Project No. 2145–040, Washington]

Public Utility District No. 1 of Chelan County, Washington; Notice of Availability of Environmental Assessment

April 11, 2002.

In accordance with the National Environmental Policy Act of 1969 and the Federal Energy Regulatory Commission's (Commission) regulations, 18 CFR Part 380 (Order No. 486, 52 FR 47910), the Office of Energy Projects has reviewed Public Utility District No. 1 of Chelan County's application for license amendment to construct and operate a permanent juvenile fish bypass system at the Rocky Reach Hydroelectric Project, located on the Columbia River in Chelan and Douglas Counties, Washington, and has prepared an Environmental Assessment (EA). The project occupies lands managed by the Bureau of Land Management and the U.S. Forest Service.

The EA contains the staff's analysis of the potential environmental impacts of the proposed amendment and concludes that approval of the proposed amendment with staff's modifications would not constitute a major federal action that would significantly affect the quality of the human environment.

The EA is attached to a Commission order issued on April 10, 2002, for the above application. Copies of the EA are available for review at the Commission's Public Reference Room, located at 888 First Street, NE., Washington, DC 20426, or by calling (202) 208–1371. The EA may be viewed on the web at http://www.ferc.gov/online/rims.htm (call (202) 208–2222 for assistance).

For further information, contact Bob Easton at (202) 219–2782.

Linwood A. Watson, Jr.,

Deputy Secretary.

[FR Doc. 02–9286 Filed 4–16–02; 8:45 am]

BILLING CODE 6717–01–P

DEPARTMENT OF ENERGY

Federal Energy Regulatory Commission

[Docket No. CP02–78–000]

Maritimes & Northeast Pipeline L.L.C.; Notice of Intent To Prepare an Environmental Assessment for the Proposed Maritimes Phase IV Project and Request for Comments on Environmental Issues

April 11, 2002.

The staff of the Federal Energy Regulatory Commission (FERC or Commission) will prepare an environmental assessment (EA) that will discuss the environmental impacts of the Maritimes Phase IV Project involving construction and operation of facilities by Maritimes & Northeast Pipeline, L.L.C. (Maritimes) in Washington, Penobscot, York, Cumberland, Waldo, and Sagadahoc Counties, Maine and Essex and Middlesex Counties, Massachusetts.[1] These facilities would consist of about 31.3 miles of 36-inch-diameter pipeline, 107,200 horsepower (hp) of compression, a meter station, and modification of existing facilities. This EA will be used by the Commission in its decision-making process to determine whether the project is in the public convenience and necessity.

If you are a landowner receiving this notice, you may be contacted by a pipeline company representative about the acquisition of an easement to construct, operate, and maintain the proposed facilities. The pipeline company would seek to negotiate a mutually acceptable agreement. However, if the project is approved by the Commission, that approval conveys with it the right of eminent domain. Therefore, if easement negotiations fail to produce an agreement, the pipeline company could initiate condemnation proceedings in accordance with state law.

A fact sheet prepared by the FERC entitled ''An Interstate Natural Gas Facility On My Land? What Do I Need To Know?'' was attached to the project notice Maritimes provided to landowners. This fact sheet addresses a number of typically asked questions, including the use of eminent domain and how to participate in the Commission's proceedings. It is available for viewing on the FERC Internet website (www.ferc.gov).

Summary of the Proposed Project

Maritimes wants to expand the capacity of its facilities in Maine and Massachusetts to transport an additional 385,000 dekatherms per day of natural gas to provide additional service for the Northeastern United States. Maritimes seeks authority to construct and operate:

- 30.1 miles of 36-inch-diameter pipeline loop in Washington County, Maine;
- 26,800 hp of gas turbine-driven compression at the new Brewer Compressor Station in Penobscot County, Maine;
- 26,800 hp of gas turbine-driven compression at the new Searsmont Compressor Station in Waldo County, Maine;
- 26,800 hp of gas turbine-driven compression at the new Gorham Compressor Station in Cumberland County, Maine;
- 26,800 hp of gas turbine-driven compression at the new Eliot Compressor Station in York County, Maine;
- Modification and repiping of the existing Baileyville Compressor Station in Washington County, Maine;
- Modification and repiping of the existing Richmond Compressor Station in Sagadahoc County, Maine;
- A new KeySpan-Haverhill Meter Station in Essex County, Massachusetts;
- Modification of the existing Dracut Meter Station in Essex County, Massachusetts;
- Modification of the existing Westbrook Meter Station in Cumberland County, Maine; and
- Two new block valves in Washington County, Maine.

[1] Maritimes' application was filed with the Commission under Section 7 of the Natural Gas Act and Part 157 of the Commission's regulations.

The location of the project facilities is shown in appendix 1.[2]

Land Requirements for Construction

Construction of the proposed pipeline would require about 377.5 acres of land. Following construction, about 94.8 acres would be maintained as permanent right-of-way. In addition, construction of the compressor and meter stations would require about 59.9 acres of land. Following construction, about 39.4 acres would be maintained for the stations, the remaining 20.5 acres of land would be restored.

The EA Process

The National Environmental Policy Act (NEPA) requires the Commission to take into account the environmental impacts that could result from an action whenever it considers the issuance of a Certificate of Public Convenience and Necessity. NEPA also requires us [3] to discover and address concerns the public may have about proposals. We call this ''scoping''. The main goal of the scoping process is to focus the analysis in the EA on the important environmental issues. By this Notice of Intent, the Commission requests public comments on the scope of the issues it will address in the EA. All comments received are considered during the preparation of the EA. State and local government representatives are encouraged to notify their constituents of this proposed action and encourage them to comment on their areas of concern.

The EA will discuss impacts that could occur as a result of the construction and operation of the proposed project under these general headings:

- Geology and soils
- Vegetation and wildlife
- Land use
- Cultural resources
- Water resources and fisheries
- Wetlands
- Public safety
- Endangered and threatened species
- Air quality and noise

We will also evaluate possible alternatives to the proposed project or portions of the project, and make recommendations on how to lessen or avoid impacts on the various resource areas.

Our independent analysis of the issues will be in the EA. Depending on the comments received during the scoping process, the EA may be published and mailed to Federal, state, and local agencies, public interest groups, interested individuals, affected landowners, newspapers, libraries, and the Commission's official service list for this proceeding. A comment period will be allotted for review if the EA is published. We will consider all comments on the EA before we make our recommendations to the Commission.

To ensure your comments are considered, please carefully follow the instructions in the public participation section below.

Currently Identified Environmental Issues

We have already identified several issues that we think deserve attention based on a preliminary review of the proposed facilities and the environmental information provided by Maritimes. This preliminary list of issues may be changed based on your comments and our analysis.

- The potential impacts of noise and air emissions from the four new compressor stations.
- The federally listed endangered Atlantic Salmon may be present in 17 perennial streams that would be crossed.

Public Participation

You can make a difference by providing us with your specific comments or concerns about the project. By becoming a commentor, your concerns will be addressed in the EA and considered by the Commission. You should focus on the potential environmental effects of the proposal, alternatives to the proposal (including alternative locations/routes), and measures to avoid or lessen environmental impact. The more specific your comments, the more useful they will be. Please carefully follow these instructions to ensure that your comments are received in time and properly recorded:

- Send an original and two copies of your letter to: Magalie R. Salas, Secretary, Federal Energy Regulatory Commission, 888 First St., N.E., Room 1A, Washington, DC 20426.
- Label one copy of the comments for the attention of Gas 2.
- Reference Docket No. CP02–78–000.
- Mail your comments so that they will be received in Washington, DC on or before May 13, 2002.

Please note that we are continuing to experience delays in mail deliveries from the U.S. Postal Service. As a result, we will include all comments that we receive within a reasonable time frame in our environmental analysis of this project. However, the Commission encourages electronic filing of any comments or interventions or protests to this proceeding. See 18 CFR 385.2001(a)(1)(iii) and the instructions on the Commission's web site at *http://www.ferc.gov* under the ''e-Filing'' link and the link to the User's Guide. Before you can file comments you will need to create a free account which can be created by clicking on ''Login to File'' and then ''New User Account.''

We may mail the EA for comment. If you are interested in receiving it, please return the Information Request (appendix 3). If you do not return the Information Request, you will be taken off the mailing list.

Becoming an Intervenor

In addition to involvement in the EA scoping process, you may want to become an official party to the proceeding known as an ''intervenor''. Intervenors play a more formal role in the process. Among other things, intervenors have the right to receive copies of case-related Commission documents and filings by other intervenors. Likewise, each intervenor must provide 14 copies of its filings to the Secretary of the Commission and must send a copy of its filings to all other parties on the Commission's service list for this proceeding. If you want to become an intervenor you must file a motion to intervene according to Rule 214 of the Commission's Rules of Practice and Procedure (18 CFR 385.214) (see appendix 2).[4] Only intervenors have the right to seek rehearing of the Commission's decision.

Affected landowners and parties with environmental concerns may be granted intervenor status upon showing good cause by stating that they have a clear and direct interest in this proceeding which would not be adequately represented by any other parties. You do not need intervenor status to have your environmental comments considered.

Environmental Mailing List

This notice is being sent to individuals, organizations, and

[2] The appendices referenced in this notice are not being printed in the **Federal Register**. Copies are available on the Commission's website at the ''RIMS'' link or from the Commission's Public Reference and Files Maintenance Branch, 888 First Street, N.E., Washington, D.C. 20426, or call (202) 208–1371. For instructions on connecting to RIMS refer to the last page of this notice. Copies of the appendices were sent to all those receiving this notice in the mail.

[3] ''We'', ''us'', and ''our'' refer to the environmental staff of the Office of Energy Projects (OEP).

[4] Interventions may also be filed electronically via the Internet in lieu of paper. See the previous discussion on filing comments electronically.

government entities interested in and/or potentially affected by the proposed project. It is also being sent to all identified potential right-of-way grantors. By this notice we are also asking governmental agencies, especially those in appendix 4, to express their interest in becoming cooperating agencies for the preparation of the EA.

Additional Information

Additional information about the proposed project is available from the Commission's Office of External Affairs at (202) 208–1088 or you can call the FERC operator at 1–800–847–8885 and ask for External Affairs. Information is also available on the FERC website (www.ferc.gov) using the ''RIMS'' link to information in this docket number. Click on the ''RIMS'' link, select ''Docket #'' from the RIMS Menu, and follow the instructions. For assistance with access to RIMS, the RIMS helpline can be reached at (202) 208–2222.

Similarly, the ''CIPS'' link on the FERC Internet website provides access to the texts of formal documents issued by the Commission, such as orders, notices, and rulemakings. From the FERC Internet website, click on the ''CIPS'' link, select ''Docket #'' from the CIPS menu, and follow the instructions. For assistance with access to CIPS, the CIPS helpline can be reached at (202) 208–2222.

Linwood A. Watson, Jr.,

Deputy Secretary.

[FR Doc. 02–9280 Filed 4–16–02; 8:45 am]

BILLING CODE 6717–01–P

DEPARTMENT OF ENERGY

Federal Energy Regulatory Commission

[Docket Nos. CP02–116–000 and CP02–117–000]

Tennessee Gas Pipeline Company; Notice of Intent To Prepare an Environmental Assessment For the Proposed South Texas Expansion Project and Request for Comments on Environmental Issues, and Notice of Site Visit

April 11, 2002.

The staff of the Federal Energy Regulatory Commission (FERC or Commission) will prepare an environmental assessment (EA) that will discuss the environmental impacts of the South Texas Expansion Project involving construction and operation of facilities by Tennessee Gas Pipeline Company (Tennessee) in Hidalgo, Victoria, and Nueces Counties, Texas.[1] These facilities would consist of about 17 miles of various diameter pipeline and 9,470 horsepower (hp) of compression. This EA will be used by the Commission in its decision-making process to determine whether the project is in the public convenience and necessity.

If you are a landowner receiving this notice, you may be contacted by a pipeline company representative about the acquisition of an easement to construct, operate, and maintain the proposed facilities. The pipeline company would seek to negotiate a mutually acceptable agreement. However, if the project is approved by the Commission, that approval conveys with it the right of eminent domain. Therefore, if easement negotiations fail to produce an agreement, the pipeline company could initiate condemnation proceedings in accordance with state law.

A fact sheet prepared by the FERC entitled ''An Interstate Natural Gas Facility On My Land? What Do I Need To Know?'' was attached to the project notice Tennessee provided to landowners. This fact sheet addresses a number of typically asked questions, including the use of eminent domain and how to participate in the Commission's proceedings. It is available for viewing on the FERC Internet website (www.ferc.gov).

Summary of the Proposed Project

Tennessee wants to expand the capacity of its facilities in Texas to transport 320,000 Decatherms per day of natural gas to a delivery point located at the International Boundary between the United States in Hidalgo County, Texas and Mexico in the State of Tamaulipas (International Boundary). Tennessee seeks Section 7'') authority to construct and operate:

- 9.28 miles of 30-inch-diameter lateral (Rio Bravo Lateral) in Hidalgo County, Texas, which would commence from milepost 9.02 on Tennessee's existing Pipeline No. 409A–100 (Donna Line) to an interconnection at the International Boundary;
- 7.58 miles of 24-inch-diameter loop of Tennessee's Donna Line in Hidalgo County, Texas;
- A new compressor station consisting of two gas-fired reciprocating compressors rated at 4,735 hp each and located near the town of Edinburg in Hidalgo County, Texas (Edinburg Compressor Station);
- A new meter station near the interconnection of the Rio Bravo Lateral and Tennessee's border crossing facility at the International Boundary; and
- Modifications of Tennessee's existing Compressor Station 1 located in Nueces County, Texas, and existing Compressor Station 9 located in Victoria County, Texas.

In addition, Tennessee requests Section 3 authorization and a Presidential Permit to site, construct, and operate a border crossing facility at the terminus of the Rio Bravo Lateral for the importation and exportation of natural gas at the International Boundary. Tennessee's border crossing facility would consist of a 1,800-foot-long segment of 30-inch-diameter pipeline which would interconnect with a proposed pipeline in Mexico to be constructed by Gasoducto del Rio, a wholly owned Mexican subsidiary of EDF International. Tennessee's proposed project and the Gasoducto del Rio pipeline would provide natural gas service to a developing power generation complex (Rio Bravo Market) comprised of four new electric power plants located in Northern Mexico.

The general location of the South Texas Expansion Project facilities is shown in appendix 1. [2]

Land Requirements for Construction

Construction of the proposed facilities would require about 276.5 acres of land. Following construction, about 118.9 acres would be maintained as permanent right-of-way, including 9.5 acres for new aboveground facility sites. The remaining 157.6 acres of temporary workspace would be restored and allowed to revert to its former use.

The EA Process

The National Environmental Policy Act (NEPA) requires the Commission to take into account the environmental impacts that could result from an action whenever it considers the issuance of a Certificate of Public Convenience and Necessity. NEPA also requires us[3] to discover and address concerns the public may have about proposals. We call this ''scoping''. The main goal of the scoping process is to focus the analysis

[1] Tennessee's application was filed with the Commission under Section 3 and Section 7 of the Natural Gas Act and Part 153 and Part 157 of the Commission's regulations.

[2] The appendices referenced in this notice are not being printed in the **Federal Register**. Copies are available on the Commission's website at the ''RIMS'' link or from the Commission's Public Reference and Files Maintenance Branch, 888 First Street, NE., Washington, DC 20426, or call (202) 208–1371. For instructions on connecting to RIMS refer to the last page of this notice. Copies of the appendices were sent to all those receiving this notice in the mail.

[3] ''We'', ''us'', and ''our'' refer to the environmental staff of the Office of Energy Projects (OEP).

in the EA on the important environmental issues. By this Notice of Intent, the Commission requests public comments on the scope of the issues it will address in the EA. All comments received are considered during the preparation of the EA. State and local government representatives are encouraged to notify their constituents of this proposed action and encourage them to comment on their areas of concern.

The EA will discuss impacts that could occur as a result of the construction and operation of the proposed project under these general headings:

- Geology and soils
- Water resources, fisheries, and wetlands
- Vegetation and wildlife
- Endangered and threatened species
- Land use
- Cultural resources
- Air quality and noise
- Public safety

We will also evaluate possible alternatives to the proposed project or portions of the project, and make recommendations on how to lessen or avoid impacts on the various resource areas.

Our independent analysis of the issues will be in the EA. Depending on the comments received during the scoping process, the EA may be published and mailed to Federal, state, and local agencies, public interest groups, interested individuals, affected landowners, newspapers, libraries, and the Commission's official service list for this proceeding. A comment period will be allotted for review if the EA is published. We will consider all comments on the EA before we make our recommendations to the Commission.

To ensure your comments are considered, please carefully follow the instructions in the public participation section beginning on page 5.

Currently Identified Environmental Issues

We have already identified several issues that we think deserve attention based on a preliminary review of the proposed facilities and the environmental information provided by Tennessee. This preliminary list of issues may be changed based on your comments and our analysis.

- Six single-family residences are within 50 feet of the proposed pipeline construction corridors.
- A directionally drilled crossing of the Rio Grande River.
- The Edinburg Compressor Station would effect the local air quality and noise environment.

Also, we have made a preliminary decision to not address the impacts of the nonjurisdictional facilities. We will briefly describe their location and status in the EA.

Public Participation

You can make a difference by providing us with your specific comments or concerns about the project. By becoming a commentor, your concerns will be addressed in the EA and considered by the Commission. You should focus on the potential environmental effects of the proposal, alternatives to the proposal (including alternative locations/routes), and measures to avoid or lessen environmental impact. The more specific your comments, the more useful they will be. Please carefully follow these instructions to ensure that your comments are received in time and properly recorded:

- Send an original and two copies of your letter to: Magalie R. Salas, Secretary, Federal Energy Regulatory Commission, 888 First St., NE., Room 1A, Washington, DC 20426.
- Label one copy of the comments for the attention of Gas 1, PJ–11.1.
- Reference Docket Nos. CP02–116–000 and CP02–117–000.
- Mail your comments so that they will be received in Washington, DC on or before May 13, 2002.

Please note that we are continuing to experience delays in mail deliveries from the U.S. Postal Service. As a result, we will include all comments that we receive within a reasonable time frame in our environmental analysis of this project. However, the Commission encourages electronic filing of any comments or interventions or protests to this proceeding. See 18 CFR 385.2001(a)(1)(iii) and the instructions on the Commission's web site at *http://www.ferc.gov* under the ''e-Filing'' link and the link to the User's Guide. Before you can file comments you will need to create a free account which can be created by clicking on ''Login to File'' and then ''New User Account.''

We may mail the EA for comment. If you are interested in receiving it, please return the Information Request (appendix 4). If you do not return the Information Request, you will be taken off the mailing list.

Site Visit

On April 22, 2002, the staff of the OEP will conduct a site inspection of the proposed South Texas Expansion Project facilities in Hidalgo County, Texas. Anyone interested in attending the site inspection should contact the Commission's Office of External Affairs at (202) 208–1088 for more details and must provide their own transportation.

Becoming an Intervenor

In addition to involvement in the EA scoping process, you may want to become an official party to the proceeding known as an ''intervenor''. Intervenors play a more formal role in the process. Among other things, intervenors have the right to receive copies of case-related Commission documents and filings by other intervenors. Likewise, each intervenor must provide 14 copies of its filings to the Secretary of the Commission and must send a copy of its filings to all other parties on the Commission's service list for this proceeding. If you want to become an intervenor you must file a motion to intervene according to Rule 214 of the Commission's Rules of Practice and Procedure (18 CFR 385.214) (see appendix 2).[4] Only intervenors have the right to seek rehearing of the Commission's decision.

Affected landowners and parties with environmental concerns may be granted intervenor status upon showing good cause by stating that they have a clear and direct interest in this proceeding which would not be adequately represented by any other parties. You do not need intervenor status to have your environmental comments considered.

Environmental Mailing List

This notice is being sent to individuals, organizations, and government entities interested in and/or potentially affected by the proposed project. It is also being sent to all identified potential right-of-way grantors. By this notice we are also asking governmental agencies, especially those in appendix 3, to express their interest in becoming cooperating agencies for the preparation of the EA.

Additional Information

Additional information about the proposed project is available from the Commission's Office of External Affairs at (202) 208–1088 (direct line) or you can call the FERC operator at 1–800–847–8885 and ask for External Affairs. Information is also available on the FERC website (www.ferc.gov) using the ''RIMS'' link to information in this docket number. Click on the ''RIMS'' link, select ''Docket #'' from the RIMS Menu, and follow the instructions. For assistance with access to RIMS, the RIMS helpline can be reached at (202) 208–2222.

[4] Interventions may also be filed electronically via the Internet in lieu of paper. See the previous discussion on filing comments electronically.

Similarly, the ''CIPS'' link on the FERC Internet website provides access to the texts of formal documents issued by the Commission, such as orders, notices, and rulemakings. From the FERC Internet website, click on the ''CIPS'' link, select ''Docket #'' from the CIPS menu, and follow the instructions. For assistance with access to CIPS, the CIPS helpline can be reached at (202) 208–2222.

Linwood A. Watson, Jr.,

Deputy Secretary.

[FR Doc. 02–9281 Filed 4–16–02; 8:45 am]

BILLING CODE 6717–01–P

DEPARTMENT OF ENERGY

Federal Energy Regulatory Commission

Notice of Intent To File Application for a New License

April 11, 2002.

Take notice that the following notice of intent has been filed with the Commission and is available for public inspection:

a. *Type of filing:* Notice of Intent to File an Application for New License.

b. *Project No:* 1051.

c. *Date filed:* March 28, 2002.

d. *Submitted By:* Alaska Power & Telephone Company.

e. *Name of Project:* Dewey Lake Hydroelectric Project.

f. *Location:* The Dewey Lake Project is located east of downtown Skagway, Alaska.

g. *Filed Pursuant to:* Section 15 of the Federal Power Act, 18 CFR 16.6.

h. Pursuant to section 16.19 of the Commission's regulations, the licensee is required to make available the information described in section 16.7 of the regulations. Such information is available from the Alaska Power & Telephone Company at 110 Spring Street, Skagway, Alaska.

i. *FERC Contact:* Alan Mitchnick, 202–219–2826, Alan.Mitchnick@Ferc.Gov.

j. *Expiration Date of Current License:* August 29, 2007.

k. *Project Description:* Powerhouse structure with four installed hydro turbines. A 2.71 acre reservoir with an earth and rock filled dam, including an intake structure. Total capacity is 943 kilowatts.

l. The licensee states its unequivocal intent to submit an application for a new license for Project No. 1051. Pursuant to 18 CFR 16.9(b)(1), each application for a new license and any competing license applications must be filed with the Commission at least 24 months prior to the expiration of the existing license. All applications for license for this project must be filed by August 29, 2005.

A copy of the notice of intent is available for inspection and reproduction at the Commission's Public Reference Room, located at 888 First Street, NE., Room 2A, Washington, DC 20426, or by calling (202) 208–1371. The notice may be viewed on *http://www.ferc.gov/online/rims.htm* call (202) 208–2222 for assistance). A copy is also available for inspection and reproduction at the address in item h above.

Linwood A. Watson, Jr.,

Deputy Secretary.

[FR Doc. 02–9284 Filed 4–16–02; 8:45 am]

BILLING CODE 6717–01–P

DEPARTMENT OF ENERGY

Federal Energy Regulatory Commission

Notice of Applications Ready For Environmental Analysis, Soliciting Comments, Recommendations, Terms and Conditions, and Prescriptions

April 11, 2002.

Take notice that the following hydroelectric application has been filed with the Commission and is available for public inspection.

a. *Type of Application:* Application for new license.

b. *Project No.:* 2086–035.

c. *Date filed:* August 30, 2001.

d. *Applicant:* Southern California Edison.

e. *Name of Project:* Vermillion Valley Project.

f. *Location:* On Mono Creek in Fresno County, near Shaver Lake, California. The project affects federal lands in the Sierra National Forest, covering a total of 2,202 acres.

g. *Filed Pursuant to:* Federal Power Act, 16 U.S.C. §§ 791 (a)—825(r).

h. *Applicant Contact:* Thomas J. McPheeters, Manager, Northern Hydro Region, Southern California Edison Company, 54205 Mountain Poplar Road, P.O. Box 100, Big Creek, California 93605, (559) 893–3646.

i. *FERC Contact:* Jim Fargo at (202) 219–2848; e-mail *james.fargo@ferc.fed.us.*

j. *Cooperating agencies:* We are asking Federal, state, local, and tribal agencies with jurisdiction and/or special expertise with respect to environmental issues to cooperate with us to prepare the environmental document. Agencies who would like to request cooperating status should follow the instructions for filing comments described in item k below.

k. *Deadline for filing comments, recommendations, terms and conditions, and prescriptions:* 60 days from the issuance date of this notice.

All documents (original and eight copies) should be filed with: Magalie R. Salas Secretary, Federal Energy Regulatory Commission, 888 First Street, NE., Washington, DC 20426.

The Commission's rules of practice require all intervenors filing documents with the Commission to serve a copy of that document on each person on the official service list for the project. Further, if an intervenor files comments or documents with the Commission relating to the merits of an issue that may affect the responsibilities of a particular resource agency, they must also serve a copy of the document on that resource agency.

Comments, recommendations, terms and conditions, and prescriptions may be filed electronically via the Internet in lieu of paper. See 18 CFR 385.2001(a)(1)(iii) and the instructions on the Commission's web site (*http://www.ferc.gov*) under the ''e-Filing'' link.

l. *Status of environmental analysis:* This application has been accepted for filing and is now ready for environmental analysis

m. *The existing Vermillion Project consists of:* (1) A 4,234-foot-long earth-fill dam; (2) Lake Edison, with a 125,035 acre-foot storage capacity at 7,642 feet; (3) a service spillway at the left abutment with a single manually operated radial gate 15 feet wide by 8 feet high, and an auxiliary spillway at the right abutment with an ungated chute discharging into an ungated channel; (4) a man-made outlet channel extending 1,300 feet to Mono Creek; and (5) a 3-kW Pelton-wheel turbine located in the outlet structure used to recharge batteries in the valve house.

n. *Locations of the Applications:* Copies of the applications are available for inspection or reproduction at the Commission's Public Reference and Files Maintenance Branch, located at 888 First Street, NE., Washington, DC 20426, or by calling (202) 208–2326. The applications may also be viewed on the web at *http://www.ferc.gov* using the ''RIMS'' link-select ''Docket #'' and follow the instructions (call 202–208–2222 for assistance). A copy is also available for inspection and reproduction at the address in item h above.

o. The Commission directs, pursuant to Section 4.34(b) of the Regulations (see Order No. 533 issued May 8, 1991, 56 FR 23108, May 20, 1991) that all comments, recommendations, terms and

conditions and prescriptions concerning the application be filed with the Commission within 60 days from the issuance date of this notice. All reply comments must be filed with the Commission within 105 days from the date of this notice.

Anyone may obtain an extension of time for these deadlines from the Commission only upon a showing of good cause or extraordinary circumstances in accordance with 18 CFR 385.2008.

All filings must (1) bear in all capital letters the title ''COMMENTS'', ''REPLY COMMENTS'', ''RECOMMENDATIONS,'' ''TERMS AND CONDITIONS,'' or ''PRESCRIPTIONS;'' (2) set forth in the heading the name of the applicant and the project number of the application to which the filing responds; (3) furnish the name, address, and telephone number of the person submitting the filing; and (4) otherwise comply with the requirements of 18 CFR 385.2001 through 385.2005. All comments, recommendations, terms and conditions or prescriptions must set forth their evidentiary basis and otherwise comply with the requirements of 18 CFR 4.34(b). Agencies may obtain copies of the application directly from the applicant. Each filing must be accompanied by proof of service on all persons listed on the service list prepared by the Commission in this proceeding, in accordance with 18 CFR 4.34(b), and 385.2010.

Linwood A. Watson, Jr.,

Deputy Secretary.

[FR Doc. 02–9285 Filed 4–16–02; 8:45 am]

BILLING CODE 6717–01–P

ENVIRONMENTAL PROTECTION AGENCY

[FRL–7173–1]

National and Governmental Advisory Committees to the U.S. Representative to the Commission for Environmental Cooperation

AGENCY: Environmental Protection Agency (EPA).

ACTION: Notice of meeting.

SUMMARY: Pursuant to the Federal Advisory Committee Act (Public Law 92–463), the U.S. Environmental Protection Agency (EPA) gives notice of a meeting of the National Advisory Committee (NAC) and Governmental Advisory Committee (GAC) to the U.S. Representative to the North American Commission for Environmental Cooperation (CEC).

The National and Governmental Advisory Committees advise the Administrator of the EPA in her capacity as the U.S. Representative to the Council of the North American Commission for Environmental Cooperation. The Committees are authorized under Article 17 and 18 of the North American Agreement on Environmental Cooperation (NAAEC), North American Free Trade Agreement Implementation Act, Public Law 103–182 and as directed by Executive Order 12915, entitled ''Federal Implementation of the North American Agreement on Environmental Cooperation.'' The Committees are responsible for providing to the U.S. Representative on a wide range of strategic, scientific, technological, regulatory and economic issues related to implementation and further elaboration of the NAAEC. The National Advisory Committee consists of 12 representatives of environmental groups and non-governmental organizations, business and industry, and educational institutions. The Governmental Advisory Committee consists of 12 representatives from state, local and tribal governments.

The Committees are meeting to discuss issues that the U.S. Government should consider as it prepares for the annual North American Commission for Environmental Cooperation Council of Ministers Session.

DATES: The Committees will meet on Thursday, May 2, 2002 from 8:30 a.m. to 5 p.m., and on Friday, May 3, 2002 from 8:30 a.m. to 3 p.m.

ADDRESSES: The meeting will be held at the Marriott at Metro Center, 775 12th Street, NW., Washington, DC. The meeting is open to the public, with limited seating on a first-come, first-served basis.

FOR FURTHER INFORMATION CONTACT: Mr. Mark Joyce, Designated Federal Officer, U.S. EPA, Office of Cooperative Environmental Management, at (202) 564–9802.

Meeting Access: Individuals requiring special accommodation at this meeting, including wheelchair access to the conference room, should contact Mark Joyce at least five business days prior to the meeting so that appropriate arrangements can be made.

Dated: April 10, 2002.

Mark N. Joyce,

Designated Federal Officer.

[FR Doc. 02–9321 Filed 4–16–02; 8:45 am]

BILLING CODE 6560–50–M

ENVIRONMENTAL PROTECTION AGENCY

[PF–1080; FRL–6830–9]

Notice of Filing Pesticide Petitions to Establish a Tolerance for Certain Pesticide Chemicals in or on Food

AGENCY: Environmental Protection Agency (EPA).

ACTION: Notice.

SUMMARY: This notice announces the initial filing of pesticide petitions proposing the establishment of regulations for residues of certain pesticide chemicals in or on various food commodities.

DATES: Comments, identified by docket control number PF–1080, must be received on or before May 17, 2002.

ADDRESSES: Comments may be submitted by mail, electronically, or in person. Please follow the detailed instructions for each method as provided in Unit I.C. of the **SUPPLEMENTARY INFORMATION**. To ensure proper receipt by EPA, it is imperative that you identify docket control number PF–1080 in the subject line on the first page of your response.

FOR FURTHER INFORMATION CONTACT: Shaja R. Brothers, Registration Division (7505C), Office of Pesticide Programs, Environmental Protection Agency, 1200 Pennsylvania Ave., NW., Washington, DC 20460; telephone number: (703) 308–3194; e-mail address: brothers.shaja@epa.gov.

SUPPLEMENTARY INFORMATION:

I. General Information

A. Does this Action Apply to Me?

You may be affected by this action if you are an agricultural producer, food manufacturer or pesticide manufacturer. Potentially affected categories and entities may include, but are not limited to:

Categories	NAICS codes	Examples of potentially affected entities
Industry	111 112 311 32532	Crop production Animal production Food manufacturing Pesticide manufacturing

This listing is not intended to be exhaustive, but rather provides a guide for readers regarding entities likely to be affected by this action. Other types of entities not listed in the table could also be affected. The North American Industrial Classification System (NAICS) codes have been provided to

assist you and others in determining whether or not this action might apply to certain entities. If you have questions regarding the applicability of this action to a particular entity, consult the person listed under **FOR FURTHER INFORMATION CONTACT**.

B. How Can I Get Additional Information, Including Copies of this Document and Other Related Documents?

1. *Electronically*. You may obtain electronic copies of this document, and certain other related documents that might be available electronically, from the EPA Internet Home Page at http://www.epa.gov/. To access this document, on the Home Page select ''Laws and Regulations'' and then look up the entry for this document under the ''**Federal Register**—Environmental Documents.'' You can also go directly to the **Federal Register** listings at http://www.epa.gov/fedrgstr/.

2. *In person*. The Agency has established an official record for this action under docket control number PF–1080. The official record consists of the documents specifically referenced in this action, any public comments received during an applicable comment period, and other information related to this action, including any information claimed as confidential business information (CBI). This official record includes the documents that are physically located in the docket, as well as the documents that are referenced in those documents. The public version of the official record does not include any information claimed as CBI. The public version of the official record, which includes printed, paper versions of any electronic comments submitted during an applicable comment period, is available for inspection in the Public Information and Records Integrity Branch (PIRIB), Rm. 119, Crystal Mall #2, 1921 Jefferson Davis Highway, Arlington, VA, from 8:30 a.m. to 4 p.m., Monday through Friday, excluding legal holidays. The PIRIB telephone number is (703) 305–5805.

C. How and to Whom Do I Submit Comments?

You may submit comments through the mail, in person, or electronically. To ensure proper receipt by EPA, it is imperative that you identify docket control number PF–1080 in the subject line on the first page of your response.

1. *By mail*. Submit your comments to: Public Information and Records Integrity Branch (PIRIB), Information Resources and Services Division (7502C), Office of Pesticide Programs (OPP), Environmental Protection Agency, 1200 Pennsylvania Ave., NW., Washington, DC 20460.

2. *In person or by courier*. Deliver your comments to: Public Information and Records Integrity Branch (PIRIB), Information Resources and Services Division (7502C), Office of Pesticide Programs (OPP), Environmental Protection Agency, Rm. 119, Crystal Mall #2, 1921 Jefferson Davis Highway, Arlington, VA. The PIRIB is open from 8:30 a.m. to 4 p.m., Monday through Friday, excluding legal holidays. The PIRIB telephone number is (703) 305–5805.

3. *Electronically*. You may submit your comments electronically by e-mail to: opp-docket@epa.gov, or you can submit a computer disk as described above. Do not submit any information electronically that you consider to be CBI. Avoid the use of special characters and any form of encryption. Electronic submissions will be accepted in Wordperfect 6.1/8.0 or ASCII file format. All comments in electronic form must be identified by docket control number PF–1080. Electronic comments may also be filed online at many Federal Depository Libraries.

D. How Should I Handle CBI That I Want to Submit to the Agency?

Do not submit any information electronically that you consider to be CBI. You may claim information that you submit to EPA in response to this document as CBI by marking any part or all of that information as CBI. Information so marked will not be disclosed except in accordance with procedures set forth in 40 CFR part 2. In addition to one complete version of the comment that includes any information claimed as CBI, a copy of the comment that does not contain the information claimed as CBI must be submitted for inclusion in the public version of the official record. Information not marked confidential will be included in the public version of the official record without prior notice. If you have any questions about CBI or the procedures for claiming CBI, please consult the person listed under **FOR FURTHER INFORMATION CONTACT**.

E. What Should I Consider as I Prepare My Comments for EPA?

You may find the following suggestions helpful for preparing your comments:

1. Explain your views as clearly as possible.
2. Describe any assumptions that you used.
3. Provide copies of any technical information and/or data you used that support your views.
4. If you estimate potential burden or costs, explain how you arrived at the estimate that you provide.
5. Provide specific examples to illustrate your concerns.
6. Make sure to submit your comments by the deadline in this notice.
7. To ensure proper receipt by EPA, be sure to identify the docket control number assigned to this action in the subject line on the first page of your response. You may also provide the name, date, and **Federal Register** citation.

II. What Action is the Agency Taking?

EPA has received pesticide petitions as follows proposing the establishment and/or amendment of regulations for residues of certain pesticide chemicals in or on various food commodities under section 408 of the Federal Food, Drug, and Cosmetic Act (FFDCA), 21 U.S.C. 346a. EPA has determined that these petitions contain data or information regarding the elements set forth in section 408(d)(2); however, EPA has not fully evaluated the sufficiency of the submitted data at this time or whether the data support granting of the petition. Additional data may be needed before EPA rules on the petition.

List of Subjects

Environmental protection, Agricultural commodities, Feed additives, Food additives, Pesticides and pests, Reporting and recordkeeping requirements.

Dated: March 29, 2002.

Robert A. Forrest,

Acting Director, Registration Division, Office of Pesticide Programs.

Summaries of Petitions

Petitioner summaries of the pesticide petitions are printed below as required by section 408(d)(3) of the FFDCA. The summaries of the petitions were prepared by the petitioners and represent the views of the petitioners. EPA is publishing the petition summaries verbatim without editing them in any way. The petition summary announces the availability of a description of the analytical methods available to EPA for the detection and measurement of the pesticide chemical residues or an explanation of why no such method is needed.

Pesticide Petitions 1E6351, 2E6394, 2E6396, 5F4440, and 5F4572

EPA has received pesticide petitions (1E6351, 2E6394, and 2E6396) from the Interregional Research Project Number 4 (IR #4), 681 U.S. Highway #1 South,

North Brunswick, NJ 08902–3390 proposing, pursuant to section 408(d) of the FFDCA, 21 U.S.C. 346a(d), to amend 40 CFR part 180.458 by establishing tolerances for residues of clethodim in or on the following raw agricultural commodities (RACs): Leafy *brassica* greens subgroup and turnip tops at 3.0 parts per million (ppm), spinach at 2.0 ppm, peppermint at 5.0 ppm, and spearmint at 5.0 ppm. This notice includes a summary of the petitions prepared by Valent U.S.A. Corporation, the registrant.

EPA has also received pesticide petitions (5F4440 and 5F4572) from the Valent U.S.A. Corporation, 1333 North California Boulevard, Suite 600, Walnut Creek, CA 94596–8025 proposing, pursuant to section 408(d) of the FFDCA, 21 U.S.C. 346a(d), to amend 40 CFR 180.458 by replacing existing time-limited tolerances, for residues of clethodim in or on the following RACs with permanent tolerances: Alfalfa forage at 6.0 ppm, alfalfa hay at 10.0 ppm, dry bean at 2.0 ppm, peanut hay at 3.0 ppm, peanut meal at 5.0 ppm, peanut at 3.0 ppm, tomato paste at 3.0 ppm, and tomato puree at 2.0 ppm.

EPA has determined that the petitions contain data or information regarding the elements set forth in section 408(d)(2) of the FFDCA; however, EPA has not fully evaluated the sufficiency of the submitted data at this time or whether the data support granting of the petitions. Additional data may be needed before EPA rules on the petitions.

A. Residue Chemistry

1. *Plant metabolism*. The metabolism of ^{14}C-clethodim labeled in the ring structure and in the side chain has been studied in carrots, soybeans, and cotton as well as in lactating goats and laying hens. The major metabolic pathway in plants is initial sulfoxidation, forming clethodim sulfoxide, followed by further oxidation to form clethodim sulfone. These reactions are apparently followed by elimination of the chloroallyloxy side chain to give the imine sulfoxide and sulfone, with further hydroxylation to form the 5–OH sulfoxide and 5–OH sulfone. Clethodim sulfoxide and clethodim sulfone conjugates were also detected as major or minor metabolites, depending on plant species and subfractions. Once the side chain is cleaved from clethodim, the chloroallyloxy moiety undergoes extensive metabolism to eliminate chlorine and incorporate 3–carbon moieties into natural plant components.

2. *Analytical method*. Practical analytical methods for detecting and measuring levels of clethodim and its metabolites have been developed and validated in/on all appropriate agricultural commodities, respective processing fractions, milk, animal tissues, and environmental samples. The methods have been validated at independent laboratories, and EPA has successfully performed an analytical method trial. For most commodities, the primary enforcement method is EPA-RM–26D–3, a high performance liquid chromatography (HPLC) method capable of distinguishing clethodim from the structurally related herbicide sethoxydim.

3. *Magnitude of residues*. The magnitude of residues is adequately understood for the proposed commodities.

B. Toxicological Profile

1. *Acute toxicity*. Clethodim technical is slightly toxic to animals following acute oral (toxicity category III), dermal (toxicity category IV), or inhalation exposure (toxicity category IV). Clethodim is a moderate eye irritant (category III), a skin irritant (category II), and does not cause skin sensitization in the modified Buehler test in guinea pigs. In addition, an acute oral no observed adverse effect level (NOAEL) has been determined in rats to be 300 milligrams/kilograms (mg/kg).

2. *Genotoxicity*. Clethodim does not present a genetic hazard. Clethodim technical did not induce gene mutation in microbial *in vitro* assays. A weak response in an *in vitro* assay for chromosome aberrations was not confirmed when clethodim was tested in an *in vivo* cytogenetics assay up to the maximally tolerated dose level, nor was the response observed *in vitro* using technical material of a higher purity. No evidence of unscheduled DNA synthesis (UDS) was seen following *in vivo* exposure up to a dose level near the lethal dose LD_{50} (1.5 g/kg). This evidence indicates that clethodim does not present a genetic hazard to intact animal systems.

3. *Reproductive and developmental toxicity*. No reproductive toxicity was observed with clethodim technical at feeding levels up to 2,500 ppm. Developmental toxicity was observed in two rodent species, but only at maternally toxic dose levels. Clethodim is therefore not considered a reproductive or developmental hazard. These studies indicate no unique toxicity to the developing fetus or young, growing animals.

The developmental toxicity study conducted with clethodim technical in the rat resulted in a developmental and maternal NOAEL and lowest observed adverse effect level (LOAEL) of 100 and 350 (mg/kg/day), respectively. The NOAEL and LOAEL for developmental toxicity were based on reductions in fetal body weight and increases in skeletal anomalies.

The developmental toxicity study conducted with clethodim technical in the rabbit resulted in a maternal toxicity NOAEL and LOAEL of 25 and 100 mg/kg/day, respectively. Maternal toxicity was manifested as clinical signs of toxicity and reduced weight gain and food consumption during treatment. Developmental toxicity was not observed, and therefore the developmental toxicity NOAEL was 300 mg/kg/day, highest dose tested (HDT). The 2–generation reproduction study conducted with clethodim technical in the rat resulted in parental toxicity NOAEL and LOAEL of 500 ppm and 2,500 ppm, respectively, based on reductions in body weight in males, and decreased food consumption in both generations. The NOAEL for reproductive toxicity was 2,500 ppm, the HDT.

4. *Subchronic toxicity*. Subchronic oral toxicity studies conducted with clethodim technical in the rat and dog indicate a low level of toxicity. Effects observed at high dose levels consisted primarily of decreased body weights, increased liver size (increased weight and cell hypertrophy), and anemia (decreased erythrocyte counts, hemoglobin, or hematocrit) in rats and dogs. The NOAELs from these studies were 500 ppm (ca. 25 mg/kg bwt/day) in rats and 25 mg/kg bwt/day in dogs. A 21–day dermal toxicity study in rats with clethodim technical showed a LOAEL at 100 mg/kg bwt/day and a NOAEL at 1,000 mg/kg bwt/day, the HDT.

5. *Chronic toxicity*. Clethodim technical has been tested in chronic studies with dogs, rats, and mice. In chronic studies, compound-related effects noted at high doses included decreased body weight, increased liver size (liver weight and hypertrophy), and anemia (decreased hemoglobin, hematocrit, and erythrocyte count). Bone marrow hyperplasia was observed in dogs at the HDT. No treatment-related increases in incidence of neoplasms were observed in any study.

Chronic NOAELs were 200 ppm for an 18–month feeding study in mice and 500 ppm for a 24–month study in rats. EPA has established a chronic population adjusted dose (cPAD) for clethodim of 0.01 mg/kg bwt/day, based on the NOAEL in the 1–year oral dog study and an uncertainty factor (UF) of 100. Effects observed at the LOAEL include alterations in hematology and

increased absolute and relative liver weights at 75 mg/kg/day.

6. *Animal metabolism*. Ruminant and poultry metabolism studies demonstrated that transfer of administered ^{14}C-clethodim residues to tissues was low. Total ^{14}C-residues in goat milk, muscle, and tissues accounted for less than 0.5% of the administered dose (24 ppm in diet for 3 days), and were less than 0.4 ppm in all cases. In poultry treated at 2.2 mg/kg/day for 5 days, total ^{14}C-residues in eggs, muscle, and most tissues were less than 0.3 ppm, although higher in liver, kidney, and the gastrointestinal tract. Residues in eggs were less than 0.2 ppm.

7. *Metabolite toxicology*. Metabolism studies of clethodim in rats, crop plants, goats, and hens demonstrate that the parent is very rapidly metabolized, and in animals, eliminated. Because parent and metabolites are not retained in the body, the potential for acute toxicity from *in situ* formed metabolites is low. The potential for chronic toxicity is adequately tested by chronic exposure to the parent at the maximum tolerance dose and consequent chronic exposure to the internally formed metabolites. Two metabolites of clethodim, clethodim imine sulfone and clethodim 5-hydroxy sulfone, have been tested in toxicity screening studies to evaluate the potential impact of these metabolites on the toxicity of clethodim. In general, these metabolites were found to be less toxic than clethodim technical for acute and oral toxicity studies; reproduction and teratology screening studies; and several mutagenicity studies.

8. *Endocrine disruption*. No special studies to investigate the potential for estrogenic or other endocrine effects of clethodim have been performed. However, a large and detailed toxicology data base exists for the compound including studies in all required categories. These studies include acute, sub-chronic, chronic, developmental, and reproductive toxicology studies including detailed histology and histopathology of numerous tissues, including endocrine organs, following repeated or long-term exposure. These studies show no evidence of any endocrine-mediated effects and no pathology of the endocrine organs. Consequently, Valent USA Corporation concludes that clethodim does not possess estrogenic or endocrine disrupting properties.

C. Aggregate Exposure

1. *Dietary exposure*. The Lifeline exposure model (Version 1.0) was used to calculate chronic dietary exposure to clethodim residues for the U.S. population using anticipated residues (average residues from field residue studies) and accounting for the percent of the crop treated. In addition to existing tolerances and those tolerances proposed in this notice, potential chronic dietary exposure to the following treated crops are also included in this analysis: Head lettuce, asparagus, basil, and chives.

i. *Food*. The highest average estimated dose from food containing clethodim residues was 0.002273 mg/kg/day for 2–year old children, which represents 23% of the chronic population adjusted dose (cPAD) of 0.01 mg/kg/day. The average dose gradually became lower, and after the age of 16 years, the dose stayed below 0.0008 mg/kg/day (8% of the cPAD). Generally speaking, the Agency has no cause for concern if total residue contribution for published and proposed tolerances is less than 100% of the cPAD.

ii. *Drinking water*. Based on the GENEEC and SCI-GROW models, the estimated environmental concentrations (EECs) of clethodim for chronic exposures are estimated to be 24.2 parts per billion (ppb) for surface water and 0.49 ppb for ground water (June 6, 2001, 66 FR 30325) (FRL–6785–5). Using standard assumptions about body weight and water consumption, the worse case chronic exposure from drinking water would, therefore, be 0.0007 and 0.0024 mg/kg bwt/day for adults and children, respectively; 24% of the cPAD for children. Based on this worse case analysis, the contribution of water to the chronic dietary risk exceeds food, but is still acceptable.

2. *Non-dietary exposure*. Clethodim is currently registered for use on the following residential non-food sites: Ornamental plants, wooden containers for growing plants, golf course turf, walkways, trails, and paths. There are no indoor uses registered for clethodim. Clethodim kills grassy weeds and does not control broadleaf weeds. Therefore, clethodim is not used on broadcast turf, but only on edges and walkways, thus greatly reducing the risk of residential exposure.

D. Cumulative Effects

In consideration of potential cumulative effects of clethodim and other substances that may have a common mechanism of toxicity, there are currently no available data or other reliable information indicating that any toxic effects produced by clethodim would be cumulative with those of other chemical compounds. Thus, only the potential risks of clethodim have been considered in this assessment of aggregate exposure and effects. Valent USA Corporation will submit information for EPA to consider concerning potential cumulative effects of clethodim consistent with the schedule established by EPA on August 4, 1997 (62 FR 42020) (FRL–5734–6), and other subsequent EPA publications pursuant to the Food Quality Protection Act (FQPA).

E. Safety Determination

1. *U.S. population*. Using the dietary exposure assessment procedures described above for clethodim, calculated chronic dietary exposure -- taking into account percent of crop treated and using anticipated residues -- from existing and proposed uses of clethodim is minimal. The estimated chronic dietary exposure from food for the U.S. population over the age of 16 years was 0.0008 mg/kg bwt/day, 8% of the cPAD. Addition of the small but worse case potential chronic exposure from drinking water (calculated above) increases exposure by 0.0007 mg/kg bwt/day and the maximum occupancy of the cPAD from 8% to 15%. Generally, the Agency has no cause for concern if total residue contribution is less than 100% of the cPAD. It can be concluded that there is a reasonable certainty that no harm will result to the U.S. population over the age of 16 years from aggregate, chronic exposure to clethodim residues.

2. *Infants and children*. In assessing the potential for additional sensitivity of infants and children to residues of clethodim, FFDCA section 408 provides that EPA shall apply an additional margin of safety, up to ten-fold, for added protection for infants and children in the case of threshold effects unless EPA determines that a different margin of safety will be safe for infants and children. The toxicological data base for evaluating prenatal and postnatal toxicity for clethodim is complete with respect to current data requirements. There are no special prenatal or postnatal toxicity concerns for infants and children, based on the results of the rat and rabbit developmental toxicity studies or the 3–generation reproductive toxicity study in rats. Valent USA Corporation concludes that reliable data support use of the standard 100–fold UF and that an additional UF is not needed for clethodim to be further protective of infants and children.

Using the conservative exposure assumptions described above (anticipated residues and percent of crop treated), the percentage of the cPAD that will be utilized by dietary (food only) exposure to residues of clethodim was 22.7% for 2–year old

children (the age at which exposure to clethodim reached a maximum). Adding the worse case potential incremental exposure to infants and children from clethodim in drinking water (0.0024 mg/kg bwt/day) greatly increases the aggregate, chronic dietary exposure and the occupancy of the cPAD by 24% to 46.7% for children (2 years old). EPA generally has no concern for exposures below 100% of the cPAD because the cPAD represents the level at or below which daily aggregate dietary exposure over a lifetime will not pose appreciable risks to human health. It can be concluded that there is a reasonable certainty that no harm will result to infants and children from aggregate, chronic exposure to clethodim residues.

F. International Tolerances

Codex, Canadian, or Mexican maximum residue levels (MRLs) have been established or proposed for residues of clethodim in/on sugar beets (0.1 ppm), potatoes (0.2 ppm), rape seed (0.5 ppm), rape seed oils (0.5 ppm), sunflower seed (0.5 ppm), and sunflower seed oils (0.05 ppm). There are no conflicts between this proposed action and existing international residue limits.

[FR Doc. 02–9323 Filed 4–16–02; 8:45 am]

BILLING CODE 6560–50–S

ENVIRONMENTAL PROTECTION AGENCY

[PF–1079; FRL–6830–5]

Notice of Filing Pesticide Petitions to Establish a Tolerance for Certain Pesticide Chemicals in or on Food

AGENCY: Environmental Protection Agency (EPA).

ACTION: Notice.

SUMMARY: This notice announces the initial filing of pesticide petitions proposing the establishment of regulations for residues of certain pesticide chemicals in or on various food commodities.

DATES: Comments, identified by docket control number PF–1079, must be received on or before May 17, 2002.

ADDRESSES: Comments may be submitted by mail, electronically, or in person. Please follow the detailed instructions for each method as provided in Unit I.C. of the **SUPPLEMENTARY INFORMATION.** To ensure proper receipt by EPA, it is imperative that you identify docket control number PF–1079 in the subject line on the first page of your response.

FOR FURTHER INFORMATION CONTACT: James A. Tompkins, Registration Division (7505C), Office of Pesticide Programs, Environmental Protection Agency, 1200 Pennsylvania Ave., NW., Washington, DC 20460; telephone number: (703) 305–5697; e-mail address: tompkins.jim@epa.gov.

SUPPLEMENTARY INFORMATION:

I. General Information

A. Does this Action Apply to Me?

You may be affected by this action if you are an agricultural producer, food manufacturer or pesticide manufacturer. Potentially affected categories and entities may include, but are not limited to:

Categories	NAICS codes	Examples of potentially affected entities
Industry	111 112 311 32532	Crop production Animal production Food manufacturing Pesticide manufacturing

This listing is not intended to be exhaustive, but rather provides a guide for readers regarding entities likely to be affected by this action. Other types of entities not listed in the table could also be affected. The North American Industrial Classification System (NAICS) codes have been provided to assist you and others in determining whether or not this action might apply to certain entities. If you have questions regarding the applicability of this action to a particular entity, consult the person listed under **FOR FURTHER INFORMATION CONTACT.**

B. How Can I Get Additional Information, Including Copies of this Document and Other Related Documents?

1. *Electronically.* You may obtain electronic copies of this document, and certain other related documents that might be available electronically, from the EPA Internet Home Page at http://www.epa.gov/. To access this document, on the Home Page select ''Laws and Regulations'' ''Regulations andProposed Rules'' and then look up the entry for this document under the ''**Federal Register**—Environmental Documents.'' You can also go directly to the **Federal Register** listings at http://www.epa.gov/fedrgstr/.

2. *In person.* The Agency has established an official record for this action under docket control number PF–1079. The official record consists of the documents specifically referenced in this action, any public comments received during an applicable comment period, and other information related to this action, including any information claimed as confidential business information (CBI). This official record includes the documents that are physically located in the docket, as well as the documents that are referenced in those documents. The public version of the official record does not include any information claimed as CBI. The public version of the official record, which includes printed, paper versions of any electronic comments submitted during an applicable comment period, is available for inspection in the Public Information and Records Integrity Branch (PIRIB), Rm. 119, Crystal Mall #2, 1921 Jefferson Davis Highway, Arlington, VA, from 8:30 a.m. to 4 p.m., Monday through Friday, excluding legal holidays. The PIRIB telephone number is (703) 305–5805.

C. How and to Whom Do I Submit Comments?

You may submit comments through the mail, in person, or electronically. To ensure proper receipt by EPA, it is imperative that you identify docket control number PF–1079 in the subject line on the first page of your response.

1. *By mail.* Submit your comments to: Public Information and Records Integrity Branch (PIRIB), Information Resources and Services Division (7502C), Office of Pesticide Programs (OPP), Environmental Protection Agency, 1200 Pennsylvania Ave., NW., Washington, DC 20460.

2. *In person or by courier.* Deliver your comments to: Public Information and Records Integrity Branch (PIRIB), Information Resources and Services Division (7502C), Office of Pesticide Programs (OPP), Environmental Protection Agency, Rm. 119, Crystal Mall #2, 1921 Jefferson Davis Highway, Arlington, VA. The PIRIB is open from 8:30 a.m. to 4 p.m., Monday through Friday, excluding legal holidays. The PIRIB telephone number is (703) 305–5805.

3. *Electronically.* You may submit your comments electronically by e-mail to: opp-docket@epa.gov, or you can submit a computer disk as described above. Do not submit any information electronically that you consider to be CBI. Avoid the use of special characters and any form of encryption. Electronic submissions will be accepted in Wordperfect 6.1/8.0 or ASCII file format. All comments in electronic form must be identified by docket control number PF–1079. Electronic comments

may also be filed online at many Federal Depository Libraries.

D. How Should I Handle CBI That I Want to Submit to the Agency?

Do not submit any information electronically that you consider to be CBI. You may claim information that you submit to EPA in response to this document as CBI by marking any part or all of that information as CBI. Information so marked will not be disclosed except in accordance with procedures set forth in 40 CFR part 2. In addition to one complete version of the comment that includes any information claimed as CBI, a copy of the comment that does not contain the information claimed as CBI must be submitted for inclusion in the public version of the official record. Information not marked confidential will be included in the public version of the official record without prior notice. If you have any questions about CBI or the procedures for claiming CBI, please consult the person listed under **FOR FURTHER INFORMATION CONTACT**.

E. What Should I Consider as I Prepare My Comments for EPA?

You may find the following suggestions helpful for preparing your comments:

1. Explain your views as clearly as possible.
2. Describe any assumptions that you used.
3. Provide copies of any technical information and/or data you used that support your views.
4. If you estimate potential burden or costs, explain how you arrived at the estimate that you provide.
5. Provide specific examples to illustrate your concerns.
6. Make sure to submit your comments by the deadline in this notice.
7. To ensure proper receipt by EPA, be sure to identify the docket control number assigned to this action in the subject line on the first page of your response. You may also provide the name, date, and **Federal Register** citation.

II. What Action is the Agency Taking?

EPA has received pesticide petitions as follows proposing the establishment and/or amendment of regulations for residues of certain pesticide chemicals in or on various food commodities under section 408 of the Federal Food, Drug, and Cosmetic Act (FFDCA), 21 U.S.C. 346a. EPA has determined that these petitions contain data or information regarding the elements set forth in section 408(d)(2); however, EPA has not fully evaluated the sufficiency of the submitted data at this time or whether the data support granting of the petition. Additional data may be needed before EPA rules on the petition.

List of Subjects

Environmental protection, Agricultural commodities, Feed additives, Food additives, Pesticides and pests, Reporting and recordkeeping requirements.

Dated: March 28, 2002.

Peter Caulkins,

Acting Director, Registration Division, Office of Pesticide Programs.

Summaries of Petitions

The Petitioner's summaries of the pesticide petitions are printed below as required by section 408(d)(3) of the FFDCA. The summaries of the petitions were prepared by the petitioner and represent the views of the petitioner. EPA is publishing the petition summaries verbatim without editing them in any way. The petition summary announces the availability of a description of the analytical methods available to EPA for the detection and measurement of the pesticide chemical residues or an explanation of why no such method is needed.

Monsanto Company

PP 0F6130, PP 0F6195, PP 1F6273, PP 1F6274, PP1F6295

EPA has received several pesticide petitions (PP 0F6130, PP 0F6195, PP 1F6273, PP 1F6274, PP 1F6295) from Monsanto Company, 600 13th Street, NW., Washington, DC 20005 proposing, pursuant to section 408(d) of the Federal Food, Drug, and Cosmetic Act (FFDCA), 21 U.S.C. 346a(d), to amend 40 CFR part 180 by establishing several tolerances for residues of glyphosate (*N*-(phosphonomethyl) glycine). In the **Federal Register** of July 25, 2000 (65 FR 45769) (FRL–6596–4), EPA issued a notice pursuant to section 408 of the FFDCA announcing the filing of a pesticide petition (PP 0F6130) for tolerance by Monsanto Company; that petition has been amended and is accordingly re-notified. Monsanto requests that 40 CFR 180.364 be amended by establishing tolerances for residues of glyphosate (*N*-(phosphonomethyl) glycine) *per se* resulting from the application of glyphosate, the isopropylamine salt of glyphosate, the ethanolamine salt of glyphosate, the potassium salt of glyphosate, and/or the ammonium salt of glyphosate in or on the listed raw agricultural commodities, (RACs) to include: grass, forage, fodder, and hay group at 300 parts per million (ppm); aspirated grain fractions at 100 ppm; corn, field, forage at 6.0 ppm; wheat, forage at 10.0 ppm; wheat, hay at 10.0 ppm; animal feeds, nongrass group at 400 ppm; rice, grain at 15.0 ppm; rice, bran at 30.0 ppm; and rice, hulls at 25.0 ppm and to increase the established tolerance for wheat, grain to 6.0 ppm. In addition, PP 1F6274 requests to revise the present tolerance for cereal grains group to be ''grain, cereal group (except barley, field corn, grain sorghum, oats, rice, and wheat).'' Finally, Monsanto seeks to delete the existing tolerance for soybean, aspirated grain fractions at 50.0 ppm since this tolerance will be included in the ''aspirated grain fractions'' described above, and PP 1F6273 seeks to delete the existing tolerance for animal, feeds, nongrass group (except alfalfa), which will be included in the above proposed ''animal feeds, nongrass group'' tolerance. The tolerances proposed for rice and wheat commodities, and the grass, forage, fodder, and hay group include both conventional and glyphosate tolerant rice, wheat, and creeping bentgrass. EPA has determined that the petitions contains data or information regarding the elements set forth in section 408(d)(2) of the FFDCA; however, EPA has not fully evaluated the sufficiency of the submitted data at this time or whether the data supports granting of the petitions. Additional data may be needed before EPA rules on the petitions.

A. Residue Chemistry

1. *Plant metabolism*. The nature of the residue in plants is adequately understood and consists of the parent, glyphosate and its metabolite aminomethyl-phosphonic acid (AMPA). Only glyphosate parent is to be regulated in plant and animal commodities since the metabolite AMPA is not of toxicological concern in food. The qualitative nature of the glyphosate residue will not be changed as a result of the proposed tolerance changes.

The qualitative nature of the residue in animals is adequately understood, and will not be affected by the proposed tolerance change. Glyphosate herbicides are not applied directly to livestock, so their only exposure is via plant residues in their diet. The terminal residue to be regulated in livestock is glyphosate *per se*.

2. *Analytical method*. Adequate enforcement methods are available for analysis of residues of glyphosate in or on plant commodities. These methods include gas liquid chromatography

(GLC) (Method I in Pesticides Analytical Manual (PAM) II; the limit of detection is 0.05 ppm) and high performance liquid chromatography (HPLC) with fluorometric detection. The HPLC procedure has undergone successful Agency validation and was recommended for inclusion in PAM II. A gas chromatography/mass spectrometry (GC/MS) method for glyphosate crops has also been validated by EPA's Analytical Chemistry Laboratory (ACL). The proposed revisions in the tolerance regulation do not change the residue to be analyzed, which remains as glyphosate *per se*.

3. *Magnitude of residues*. Adequate data concerning glyphosate residues on raw agricultural commodities (RACs) and relevant processed commodities has been submitted to the Agency. Accordingly, the available residue data for glyphosate support the proposed revisions of the tolerance regulation for glyphosate. In addition, any secondary residues occurring in liver, or kidney of cattle, goats, horses, sheep, and meat-by-products of poultry, and eggs, will be covered by existing tolerances. Existing glyphosate tolerances for fish and shellfish will cover any residues occurring in harvestable aquatic species.

B. Toxicological Profile

1. *Acute toxicity*. Several acute toxicology studies place technical-grade glyphosate in toxicity category III and toxicity IV. Technical glyphosate is not a dermal sensitizer.

2. *Genotoxicty*. In an *in viro* rec − assay with *B. subtilis* H17 (rec+) and M45 (rec −) and reverse mutation assay using *E. coli* WP2 hcr and *S. typhimurium* strains, there was no evidence of gene toxicity genotoxicity up to the limit dose or cytotoxicity in the presence or absence of metabolic activation.

In an *in vitro* reverse gene mutation assay in *S. typhimurium* bacteria, there was no evidence of induced mutant colonies over background in *Salmonella* strains TA 98, TA 100, TA 1535, and TA 1537 both in the presence and absence of metabolic activation at doses up to cytotoxic levels or the limit dose. In an *in vitro* gene mutation assay in chinese hamster ovary (CHO) cells/ hypoxanthine guanine phophoribosyl transferase (HGPRT), there was no evidence of genotoxicity up to cytotoxic levels in the presence or absence of metabolic activation. In a bone marrow chromosome aberrations assay, there was no significant increase in the frequency of chromosome aberrations in bone marrow at the limit dose of 1,000 milligrams/kilograms (mg/kg) in both sexes of Sprague-Dawley rats.

3. *Reproductive and developmental toxicity*. In a prenatal developmental toxicity in rats, the maternal no observe adverse effect level (NOAEL) = 1,000 mg/kg/day based on mortality with a maternal lowest observe adverse effect level (LOAEL) 3,500 mg/kg/day based on mortality, increased clinical signs, and reduced body weight gain. The developmental NOAEL = 1,000 mg/kg/ day and the developmental LOAEL = 3,500 mg/kg/day based on decreases in total implantations/dam and nonviable fetuses/dam, increased number of litters and fetuses with unossified sternebrae, and decreased fetal body weight.

In a prenatal developmental toxicity in rabbits the maternal NOAEL = 175 mg/kg/day, the maternal LOAEL = 350 mg/kg/day based on mortality, and clinical signs. The developmental NOAEL = 175 mg/kg/day and the developmental LOAEL = 350 mg/kg/day (insufficient litters available to assess development.

In a reproduction and fertility study with rats the parental/systemic NOAEL = 500 mg/kg/day for males and females, the parental/systemic LOAEL = 1,500 mg/kg/day for males and females based on clinical signs, decreased body weights, decreased weight gain, and decreased food consumption in both sexes. The reproductive/offspring NOAEL = 500 kg/day for males and females and the reproductive/offspring LOAEL = 1,500 mg/kg/day for males and females based on reduced pup weights in both sexes during second and third weeks of lactation.

4. *Subchronic toxicity*. In a 90–day oral toxicity study in rats the NOAEL is less than 50 mg/kg/day for both sexes and the LOAEL = 50 mg/kg/day based on increased phosphorus and potassium in both sexes. In a 90–day oral toxicity study in mice the NOAEL = 1,500 mg/ kg/day in both sexes and the LOAEL = 7,500 mg/kg/day in both sexes based on decreased body weight gain in both sexes. In a 21/28–day dermal toxicity study in rabbits, the NOAEL = 1,000 mg/kg/day for males and 5,000 mg/kg/ day for females. The LOAEL = 5,000 mg/kg/day in males based on decreased food consumption.

5. *Chronic toxicity*. In a chronic toxicity study in dogs the NOAEL = 500 mg/kg/day highest dose tested (HDT). The LOAEL was greater than 500 mg/kg/ day. In a combined chronic toxicity/ carcinogenicity study in rats the NOAEL = 362 mg/kg/day in males and 457 mg/ kg/day in females, the LOAEL = 940 mg/ kg/day in males and 1,183 kg/kg/day in females based on decreased weight gain in females, and increased incidence of cataracts and lens abnormalities, decreased urinary pH, increased absolute liver weight, and increased relative liver weight/brain weight in males. There was no evidence of carcinogenicity. In a carcinogenicity study in mice the NOAEL = 750 mg/kg/ day in males and females, the LOAEL = 4,500 mg/kg/day in both sexes based on decreased body weight gains in both sexes, increased incidence of renal proximal tubule epithelial basophilia and hypertrophy in females and increased incidence of interstitial nephritis, hepatocellular hypertrophy and hepatocellular necrosis in males. There was no evidence of carcinogenicity.

6. *Animal metabolism*. The qualitative nature of the residue in animal is adequately understood. Studies with lactating goats and laying hens fed a mixture of glyphosate and AMPA indicate that the primary route of elimination was by excretion (urine and feces). These results are consistent with metabolism studies in rats, rabbits, and cows. The terminal residues in eggs, milk, and animal tissues are glyphosate and its metabolite AMPA; there was no evidence for further metabolism. The terminal residue to be regulated in livestock is glyphosate *per se*.

7. *Metabolite toxicology*. The metabolite AMPA has been determined to not be of toxicological significance.

8. *Endocrine disruption*. The toxicology studies discussed above measure numerous endpoints with sufficient sensitivity to detect potential endocrine-modulating activity. No effects have been identified in subchronic, chronic or developmental toxicity or multi-generation reproduction studies to indicate any endocrine-modulating activity by glyphosate. In addition, no adverse was seen when glyphosate was tested in a dominant-lethal mutation assay. While this assay was designed as a genetic toxicity test, agents that can affect male reproduction function will also cause effects in this assay.

C. Aggregate Exposure

1. *Dietary exposure*. Tolerances have been established (40 CFR 180.364) for the residues of (*N*-(phosphonomethyl)glycine resulting from the application of the isopropylamine salt of glyphosate, the ammonium salt of glyphosate, and/or the ethanolamine salt of glyphosate, in or on a variety of food and feed commodities. The petitioner proposes to add potassium salt to this list of acceptable salt forms to which the tolerances apply, and to amend or add a number of new animal feed tolerances and one food tolerance. Tolerances are established for cattle, goat, hog, horse,

and sheep kidney at 4.0 ppm, and liver at 0.5 ppm, and for poultry meat at 0.1 ppm, eggs at 0.05 ppm, and poultry meat byproducts at 1.0 ppm, based on animal-feeding studies and reasonable worst-case livestock diets. This analysis showed that the existing livestock tolerances are sufficient for any additional dietary burden arising from the proposed feed tolerances.

Risk assessments were conducted by EPA to assess dietary exposure from glyphosate in food as follows:

2. *Acute exposure—Food.* Acute dietary risk assessments are performed for a food-use pesticide if a toxicological study has indicated the possibility of an effect of concern occurring as a result of a 1–day or single exposure. An acute dietary endpoint and dose was not identified for glyphosate. A review of the rat and rabbit developmental studies did not provide a dose or endpoint that could be used for acute dietary risk purposes. Additionally, there are no data requirements for acute and subchronic rat neurotoxicity studies since there was no evidence of neurotoxicity in any of the toxicology studies at very high doses and glyphosate lacks a leaving group.

3. *Chronic exposure.* i. In conducting this chronic dietary risk assessment the dietary exposure evaluation model (DEEM®) analysis evaluated the individual food consumption as reported by respondents in the United States Department of Agriculture (USDA) 1989–1992 nationwide continuing surveys of food intake by individuals (CSFII) and accumulated exposure to the chemical for each commodity. The following assumptions were made for the chronic exposure assessments: The chronic dietary exposure analysis was conducted using the reference dose (RfD) of 2.0 mg/kg/day. The RfD is based on the maternal NOAEL of 175 mg/kg/day from a developmental study and an uncertainty factor (UF) of 100 (applicable to all population subgroups). The DEEM analysis assumed tolerance level residues and 100% of the crop treated in/on all commodities with an existing or proposed glyphosate tolerance. These assumptions resulted in the following theoretical maximum residue contributions (TMRC) and percentage RfDs for certain population subgroups. The TMRC for the U.S. population (48 contiguous states) was 0.033727 mg/kg/day or 1.7% of the RfD, 0.029752 mg/kg/day or 1.5% of the RfD for nursing infants (less than 1–year old), 0.094859 mg/kg/day or 4.7% of the RfD for non-nursing infants less that 1–year old; 0.072062 mg/kg/day or 3.6% of the RfD of children (1 to 6 years old); 0.047815 mg/kg/day or 2.4% of the RfD for children (7 to 12 years old); 0.034216 mg/kg/day or 1.7% of the RfD for females (13+/nursing); 0.033234 mg/kg/day or 1.7% of the RfD for non-hispanic whites; 0.034578 mg/kg/day or 1.7% of the RfD for hispanics, and 0.035141 mg/kg/day or 1.7% of the RfD for non-hispanic blacks.

ii. *Cancer.* There is no evidence of carcinogenic potential.

4. *Drinking water.* The available field and laboratory data indicate that glyphosate adsorbs strongly to soil and would not be expected to move vertically below the 6 inch soil layer. Based on non-aged batch equilibrium studies glyphosate and glyphosate residues are expected to be immobile with Kd(ads) values ranging from 62 to 175. The mechanism of adsorption is unclear; however, it is speculated that it may be associated with vacant phosphate sorption sites or high levels of metallic soil cations. The data indicate that chemical and photo-chemical decomposition is not a significant pathway of degradation of glyphosate in soil and water. However, glyphosate is readily degraded by soil microbes to AMPA, which is degraded to CO_2, although at a slower rate than parent glyphosate. The proposed amendment to permit the use of potassium glyphosate formulations is not expected to change the environmental properties of glyphosate.

The Agency lacks sufficient monitoring exposure data to complete a comprehensive dietary exposure analysis and risk assessment for glyphosate in drinking water. Because the Agency does not have comprehensive monitoring data, drinking water concentration estimates are made by reliance on simulation or modeling taking into account data on the physical characteristics of glyphosate.

The Agency uses the generic expected environmental concentration (GENEEC) or the pesticide root zone/exposure analysis modeling system (PRZM/EXAMS) to estimate pesticide concentrations in surface water and the screening concentration and ground water (SCI-GROW) model, which predicts pesticide concentrations in ground water. In general, EPA will use GENEEC (a Tier 1 model) before using PRZM/EXAMS (a Tier 2 model) for a screening-level assessment for surface water. The GENEEC model is a subset of the PRZM/EXAMS model that uses a specific high-end runoff scenario for pesticides. GENEEC incorporates a farm pond scenario, while PRZM/EXAMS incorporate an index reservoir environment in place of the previous pond scenario. The PRZM/EXAMS model includes a percent crop area factor as a possible adjustment to account for the maximum percent crop coverage within a watershed or drainage basin.

None of these models include consideration of the impact processing (mixing, dilution or treatment) of raw water for distribution as drinking water would likely have on the removal of pesticides from the source water. The primary use of these models by the Agency at this stage is to provide a coarse screen for sorting out pesticides for which it is highly unlikely that drinking water concentrations would ever exceed human health levels of concern.

Since the models used are considered to be screening tools in the risk assessment process, the Agency does not use estimated environmental concentrations (EECs) from these models to quantify drinking water exposure and risk as a %RfD or percent of population adjusted dose (%PAD). Instead, drinking water levels of comparison (DWLOCs) are calculated and used as a point of comparison against the model estimates of a pesticide's concentration in water. DWLOCs are theoretical upper limits on a pesticide's concentration in drinking water in light of total aggregate exposure to a pesticide in food, and from residential uses. Since DWLOCs address total aggregate exposure to glyphosate they are further discussed in the aggregate risk sections below.

Using available environmental fate parameters and assuming two applications with a retreatment interval of 90 days at a rate of 5 lbs. active ingredient/arce (3.75 lbs active ingredient/acre), the ground water EEC from glyphosate using SCI-GROW was 0.0038 parts per billion (ppb). The current label allows multiple applications of 0.37 - 5 lbs active ingredient/acre up to a maximum of 10.6 lbs active ingredient/acre/year. The ground water EECs generated by SCI-GROW are based on the largest 90–day average recorded during the sampling period. Since there is relatively little temporal variation in ground water concentrations compared to surface water, the concentrations can be considered as acute and chronic values.

The GENEEC model was used to estimate surface water concentrations for glyphosate resulting from its maximum use rate on crops. GENEEC is a single event model (one runoff event), but can account for spray drift from multiple applications. GENEEC represents a 10 hectare field immediately adjacent to a 1 hectare

pond that is 2 meters deep with no outlet. The pond receives a spray drift event from each application plus one runoff event. The runoff event moves a maximum of 10% of the applied pesticide into the pond. This amount can be reduced due to degradation on the field and by soil sorption. Spray drift is estimated as 5% of the application rate. The GENEEC values represent upper-bound estimates of the concentrations that might be found in the surface water due to glyphosate use. Thus, the GENEEC model predicts that glyphosate surface water EECs range from a peak of 21 ppb to a 56–day average of 2.5 ppb. For comparison purposes, EPA guidance suggests dividing the 56–day GENEEC EEC value by 3 before comparison to the calculated DWLOC chronic value (''Interim Guidance for Incorporating Drinking Water Exposure into Aggregate Risk Assessments,'' August 1, 1999, SOP 99.5). Thus, 2.5 divided by 3 or 0.83 ppb is the predicted surface water EEC value resulting from glyphosate treatment of crops.

To estimate the possible concentration of glyphosate in surface water resulting form direct application to water, EPA assumed application to a water body 6 feet deep. At an application rate of 3.75 lbs active ingredient/acre, the estimated peak concentration is 230 ppb. Using this peak value in a first-order dissipation model with a half-life for glyphosate in water of 7.5 days, the resulting 56–day average is 54.6 ppb. Following the EPA guidance, as described above, the 56–day average value divided by 3, or 15.4 ppb, is the predicted surface water EEC resulting from direct application to water. Because the glyphosate water-application estimate is greater than the crop-application estimate, 15.4 ppb is the appropriate chronic value to compare to the calculated DWLOC chronic value for aggregate risk considerations.

Based on the GENEEC and SCI-GROW models the EECs of glyphosate for chronic exposures are estimated to be 15.4 ppb for surface water and 0.004 ppb for ground water.

5. *Non-dietary exposure.* The term ''residential exposure'' is used in this document to refer to non-occupational, non-dietary exposure (e.g., for lawn and garden pest control, indoor pest control, termiticides, and flea and tick control on pets). Glyphosate is currently registered for use on the following residential non-dietary sites:

i. Ornamentals, greenhouses, residential areas, lawns, and industrial rights of way.

ii. Glyphosate is formulated in liquid and solid forms and it is applied using ground or aerial equipment.

iii. Based on the low acute toxicity and the lack of other toxicological concerns, exposures from residential uses of glyphosate are not expected to pose undue risks.

D. Cumulative Effects

Cumulative exposure to substances with a common mechanism of toxicity. Section 408(b)(2)(D)(v) requires that, when considering whether to establish, modify, or revoke a tolerance, the Agency consider ''available information'' concerning the cumulative effects of a particular pesticide's residue and ''other substances that have a common mechanism of toxicity.''

EPA does not have, at this time, available data to determine whether glyphosate has a common mechanism of toxicity with other substances or how to include this pesticide in a cumulative risk assessment. Unlike other pesticides for which EPA has followed a cumulative risk approach based on a common mechanism of toxicity, glyphosate does not appear to produce a toxic metabolite produced by other substances. For the purposes of this tolerance action, therefore, EPA has not assumed that glyphosate has a common mechanism of toxicity with other substances. For information regarding EPA's efforts to determine which chemicals have a common mechanism of toxicity and to evaluate the cumulative effects of such chemicals, see the final rule for bifenthrin pesticide tolerances (62 FR 62961)(FRL–5754–7), **Federal Register** of November 26, 1997).

E. Safety Determination

1. *U.S. population.* To estimate total aggregate exposure to a pesticide from food, drinking water, and residential uses, the Agency calculates DWLOCs that are used as a point of comparison against the model estimates of a pesticide's concentration in water. DWLOC values are not regulatory standards for drinking water. DWLOCs are theoretical upper limits on a pesticide's concentration in drinking water in light of total aggregate exposure to a pesticide in food and residential uses. In calculating a DWLOC, the Agency determines how much of the acceptable exposure (i.e., the population adjusted dose (PAD)) is available for exposure through drinking water, e.g., allowable chronic water exposure (mg/kg/day) = chronic population adjusted dose (cPAD) -(average food + residential exposure). This allowable exposure through drinking water is used to calculate a DWLOC.

A DWLOC will vary depending on the toxic endpoint, drinking water consumption, and body weights. Default body weights and consumption values as used by EPA's Office of Water are used to calculate DWLOCs: 2L/70 kg (adult male), 2L/60 kg (adult female), and 1L/10 kg (child). Default body weights and drinking water consumption values vary on an individual basis. This variation will be taken into account in more refined screening-level and quantitative drinking water exposure assessments. Different populations will have different DWLOCs. Generally, a DWLOC is calculated for each type of risk assessment used: acute, short-term, intermediate-term, chronic, and cancer.

When EECs for surface water and ground water are less than the calculated DWLOCs, the Office of Pesticide Programs (OPP) concludes with reasonable certainty that exposures to the pesticide in drinking water (when considered along with other sources of exposure for which OPP has reliable data) would not result in unacceptable levels of aggregate human health risk at this time. Because OPP considers the aggregate risk resulting from multiple exposure pathways associated with a pesticide's uses, levels of comparison in drinking water may vary as those uses change. If new uses are added in the future, OPP will reassess the potential impacts of residues of the pesticide in drinking water as a part of the aggregate risk assessment process.

i. *Acute risk.* No appropriate toxicological endpoint for a single dose exposure was identified in oral toxicity studies with glyphosate. Therefore, an acute RfD was not established, and there is no expectation of acute dietary risk from food and water.

ii. *Chronic risk.* Using the exposure assumptions described in this unit for chronic exposure, EPA has concluded that exposure to glyphosate from food using present tolerances and all proposed new tolerances, will utilize 1.7% of the cPAD for the U.S. population, 3.8% of the cPAD for all infants less than 1–year old and 3.6% of the cPAD for children (1 to 6 years old). These dietary exposure levels take into account all existing and proposed tolerances for glyphosate. Based on the use pattern, chronic residential exposure to residues of glyphosate is not expected. In addition, there is potential for chronic dietary exposure to glyphosate in drinking water. After calculating DWLOCs and comparing them to the EECs for surface and ground water, EPA does not expect the aggregate exposure to exceed 100% of the cPAD. DWLOCs for the U.S.

population, infants less than 1–year old, and children (1 to 6) are 69,000 ppb, 19,000 ppb, and 19,000 ppb, respectively, compared with EECs of 0.004 ppb and 15.4 ppb for ground and surface water, respectively.

2. *Infants and children*. In general, FFDCA Section 408 provides that EPA shall apply an additional ten-fold margin of safety (MOS) for infants and children in the case of threshold effects to account for prenatal and postnatal toxicity and the completeness of the data base on toxicity and exposure unless EPA determines that a different MOS will be safe for infants and children. Margins of safety are incorporated into EPA risk assessments either directly through use of a margin of exposure (MOE) analysis or through using uncertainty (safety) factors in calculating a dose level that poses no appreciable risk to humans. EPA believes that reliable data support using the standard UF (usually 100 x for combined interspecies and intraspecies variability) and not the additional ten-fold MOE/UF when EPA has a complete data base under existing guidelines and when the severity of the effects in infants or children or the potency or unusual toxic properties of a compound do not raise concerns regarding the adequacy of the standard MOE/safety factor.

i. *Prenatal and postnatal sensitivity*. There is no evidence of increased susceptibility in rats and rabbits to *in utero* and/or postnatal exposure to glyphosate.

ii. *Conclusion*. There is a complete toxicity data base for glyphosate and exposure data are complete or are estimated based on data that reasonably accounts for potential exposures. EPA determined that the 10X SF to protect infants and children should be removed. The FQPA factor is removed because:

- The toxicology data base is complete.
- There is no indication of increased susceptibility of rats or rabbits to *in utero* and/or postnatal exposure to glyphosate (in the prenatal developmental toxicity study in rats, effects in the offspring were observed only at or above treatment levels which resulted in evidence of appreciable parental toxicity).
- The use of generally high quality data, conservative models and/or assumptions in the exposure assessment provide adequate protection of infants and children.

F. International Tolerances

Several maximum residue limits (MRLs) for glyphosate have been established by CODEX in or on various commodities. These limits are based on the residue definition of glyphosate *per se*, without reference to the cation used in product formulations. Based on toxicological considerations, EPA has determined that AMPA no longer needs to be regulated and has deleted AMPA from the U.S. tolerance expression, so that the U.S. residue definition is harmonized with that of CODEX. The proposed rice grain tolerance of 15.0 ppm, is based on crop field trial data obtained using glyphosate-tolerant rice and therefore cannot be lowered to maintain harmonization with the CODEX MRL of 0.1 ppm, for residues of glyphosate in or on this commodity. A CODEX MRL exists for ''hay or fodder (dry) of grasses'' at 50.0 ppm, and on ''maize forage'' at 1.0 ppm, however the proposed U.S. tolerance for ''grass, forage, fodder, and hay group'' at 300 ppm, and ''corn, field, forage'' at 6.0 ppm, are based on higher application rates than those used in the residue studies considered by CODEX, so that harmonization cannot be maintained in these cases. Other than for these specific commodities, the agreement between U.S. tolerances and Codex international residue standards is unaffected by this action.

[FR Doc. 02–9324 Filed 4–16–02; 8:45 am]

BILLING CODE 6560–50–S

ENVIRONMENTAL PROTECTION AGENCY

[FRL–7172–4]

Guidance on the CERCLA Section 101(10)(H) Federally Permitted Release Definition for Certain Air Emissions

AGENCY: Environmental Protection Agency (EPA).

ACTION: Notice.

SUMMARY: EPA is publishing as an appendix to this notice a guidance on the CERCLA section 101(10)(H) federally permitted release definition for certain air emissions.

FOR FURTHER INFORMATION CONTACT: Visit the OECA Docket Web Site at www.epa.gov/oeca/polguid/enfdock.html or contact the RCRA/UST, Superfund and EPCRA Hotline at (800) 424–9346 or (703) 412–9810 in Washington, DC area. For general questions about this guidance, please contact Lynn Beasley at (703) 603–9086 and for enforcement related questions, please contact Ginny Phillips at (202) 564–6139 or mail your questions to: U.S. EPA, 1200 Pennsylvania Ave., NW., Washington DC 20460, attention Lynn Beasley, mail code 5204G.

SUPPLEMENTARY INFORMATION:

Purpose of this Notice

Today's guidance discusses the federally permitted release definition, which is an exemption to the reporting requirements under two federal emergency response and public right to know laws: section 103 of the Comprehensive Environmental Response, Compensation, and Liability Act (''CERCLA''), as amended, 42 U.S.C. 9603 and section 304 of the Emergency Planning and Community Right-to-Know Act (''EPCRA''), 42 U.S.C. 11004. Federally permitted releases are defined in CERCLA section 101(10), which specifically identifies certain releases that are permitted or controlled under several environmental statutes and exempts these releases from the notification requirements of CERCLA section 103 and EPCRA section 304. CERCLA section 101(10)(H) identifies releases that are exempt from reporting because they are subject to permits and regulations under the Clean Air Act (''CAA'').

This guidance reflects our consideration of the general concerns raised by previous **Federal Register** notices on the definition of federally permitted release, the comments submitted on the Interim Guidance and our own experience in implementing the reporting requirements under CERCLA section 103 and EPCRA section 304. This guidance also considers several administrative adjudication decisions on federally permitted releases.

This guidance does not impose new reporting requirements or change the types of releases which are required to be reported under CERCLA section 103 and EPCRA section 304 or the implementing regulations at 40 CFR parts 302 and 355. The legal authority for the reporting requirements arises from those statutory and regulatory provisions, as well as the statutory provisions on federally permitted releases, not from this guidance. This guidance has no effect on CAA permit requirements.

The CAA provides EPA and states the authority to impose a wide variety of permits, regulatory limits and control requirements on emission sources. Whether a particular air release of a hazardous substance or extremely hazardous substance is exempt from CERCLA section 103 and EPCRA section 304 reporting requirements requires a case-by-case determination based on the specific permit language or applicable control requirement. As a consequence, it is difficult to establish a ''bright line'' for when releases qualify for the

CERCLA federally permitted release exemption.

Opportunities for Notice and Comment

The public has had several opportunities to comment on our interpretation of the CERCLA definition of federally permitted release. We originally requested comments on this issue in 1983, when we proposed regulations for CERCLA notification requirements and reportable quantity adjustments. See 48 FR 23552 (May 25, 1983). Subsequently, in a 1988 proposed rule, we addressed some comments on federally permitted releases, explained our understanding of the term in certain circumstances and requested additional comments. See 53 FR 27268 (July 19, 1988). In 1989, we published a Supplemental Notice of Proposed Rulemaking and requested further comment on our interpretation of federally permitted releases. See 54 FR 20305 (July 11, 1989). On December 21, 1999, we published in the **Federal Register** the ''Interim Guidance on the CERCLA section 101(10)(H) Federally Permitted Release Definition for Certain Air Emissions'' (''Interim Guidance''), requested comment and announced a public meeting. See 64 FR 71614 (December 21, 1999). We extended the comment period twice, providing the public with over 75 days to consider and prepare their comments on the Interim Guidance. We hosted a public meeting on February 24, 2000, to provide additional opportunities for oral testimony and dialogue. This extensive comment period gave the public an opportunity to raise their concerns to us prior to the publication of this guidance. The guidance addresses many of the comments received on the Interim Guidance.

Changes From the Interim Guidance

This guidance supercedes the Interim Guidance, which is now deemed to be withdrawn. It also differs from the Interim Guidance in several aspects. First, this guidance clarifies the discussion of volatile organic compounds (''VOC'') and particulate matter (''PM'') limits and controls and when releases of hazardous substances which are constituents of these criteria pollutants could qualify for the CERCLA federally permitted release exemption. Second, the Guidance adds a section addressing air emissions of nitrogen oxide (''NO'') and nitrogen dioxide (''NO_2''). Third, whether the exemption can be applied to grandfathered sources will be addressed in a separate forthcoming guidance document. Finally, the guidance explains that certain releases from minor sources subject to a federally enforceable limit may meet the definition of a CERCLA federally permitted release.

The changes from the Interim Guidance are based on the information we received from comments on the Interim Guidance. For example, commentors provided us with examples of permits that have VOC and/or PM control requirements that may also effectively limit or control the emissions of hazardous substances. Therefore, in response to this information, we clarified and expanded our discussion of when a release of a hazardous constituent of VOC or PM could be considered a federally permitted release.

Although releases of NO and NO_2 were not addressed directly in the Interim Guidance, commentors pointed out to us that the current ten pound reportable quantity for CERCLA/EPCRA reporting for NO and NO_2 could result in a large number of notifications of very small releases which could overburden the CERCLA notification system and have negative consequences on the government's ability to focus its resources on more serious releases. We agree with these commentors and are addressing this issue in several ways. First, we agree that permitted air releases of NO and NO_2 that are subject to limits or controls for NO_X are CERCLA federally permitted releases. Second, the Agency supports the proposal of an administrative reporting exemption for certain NO and NO_2 air releases which could result in these releases not being required to be reported under CERCLA section 103 and EPCRA section 304. EPA will move forward with the proposal as soon as resources become available. Finally, we are providing enforcement discretion to certain sources that would otherwise have to report their NO and NO_2 air releases until the administrative reporting exemption process is complete or until we publish a notice saying otherwise.

We also received a significant number of comments concerned with the possible impacts of the Interim Guidance on the notification requirements for releases from CAA minor sources. Commentors have provided us with useful information on the number of minor sources they feel are potentially impacted by this guidance, the treatment of minor sources under federal and state air regulatory programs and why they feel that releases from minor sources meet the definition of federally permitted release under CERCLA. Most commentors believe that emissions from minor sources meet the CERCLA federally permitted release definition. We agree with one group of commentors which has pointed out that in some situations emissions that are in compliance with a federally enforceable threshold limit meet the definition of federally permitted releases. The specific situations are discussed in section V of the guidance.

Finally, we have reformatted this guidance to more clearly respond to the questions raised by commentors, and to make the document easier to read in accordance with President Clinton's June 1, 1998, Executive Memorandum on Plain Language in Government Writing. The word ''we'' in this guidance means EPA. The word ''you'' in this guidance means the reader and, depending on context, may mean state, local or tribal government agencies, industry, environmental groups or other stakeholders.

The Office of Solid Waste and Emergency Response and the Office of Enforcement and Compliance Assurance jointly issue this guidance.

Dated: April 4, 2002.

Marianne Lamont Horinko,

Assistant Administrator for Solid Waste and Emergency Response.

Dated: April 11, 2002.

Sylvia K. Lowrance,

Acting Assistant Administrator for Enforcement and Compliance Assurance.

Appendix A—Guidance on the CERCLA Section 101(10)(H) Federally Permitted Release Definition for Certain Air Emissions

Table of Contents

I. Background: CERCLA Section 103 and EPCRA Section 304
II. Purpose of Guidance
III. Emission Exceedances of Permit Limits and Control Regulations
IV. Criteria Pollutants: VOCs, PM and NO_X
V. Minor Sources
VI. Waivers
VII. Accidents and Malfunctions
VIII. Start-up/Shut-down
IX. Conclusion

I. Background: CERCLA Section 103 and EPCRA Section 304

Reporting Requirements

The Comprehensive Environmental Response, Compensation and Liability Act of 1980, 42 U.S.C. 9601 *et seq.* (''CERCLA'') gives EPA broad authority to respond to releases or threats of releases of hazardous substances. In order to alert federal officials of potentially dangerous releases of hazardous substances, CERCLA section 103 requires facilities to immediately notify the National Response Center (''NRC'') of any release of a hazardous substance in an amount equal to or greater than the reportable quantity

(''RQ'') for that substance. Section 103(a) states, in part, as follows:

> Any person in charge of a vessel or an offshore or an onshore facility shall, as soon as he has knowledge of any release (other than a federally permitted release) of a hazardous substance from such vessel or facility in quantities equal to or greater than those determined pursuant to section 9602 of this title, immediately notify the National Response Center * * *

42 U.S.C. 9603(a). This notification provides release information to the government so that government personnel can evaluate the need for a response and undertake any necessary action in a timely fashion. CERCLA section 103(f) stablishes an alternative reporting scheme for releases that are continuous and stable in quantity and rate. A facility choosing this alternative submits a report on the continuous release in compliance with the regulations at 40 CFR 302.8 and 355.40(a)(2)(iii). CERCLA section 104 authorizes the federal government to respond whenever there is a release or a substantial threat of a release of a hazardous substance.

The Emergency Planning and Community Right-to-Know Act (''EPCRA''), 42 U.S.C. 11001 *et seq.*, also known as Title III of the Superfund Amendments and Reauthorization Act of 1986 (''SARA''), and its implementing regulations (40 CFR part 355) was established to ''* * * provide the public with important information on the hazardous chemicals in their communities, and to establish emergency planning and notification requirements which would protect the public in the event of a release of hazardous chemicals.'' H.R. Conf. Rep. No. 962, 96th Cong., 2d Sess. (1986). EPCRA section 304 requires the owner or operator of a facility to immediately notify both the state emergency response commissions (''SERC'') and local emergency planning committees (''LEPC'') whenever the facility has a release of an RQ or more of a CERCLA hazardous substance or an EPCRA extremely hazardous substance (''EHS'') for each area that the release is likely to affect. EPCRA section 304(c) requires the owner or operator of the facility, as soon as practicable after a reportable release, to provide a written follow up notice that includes information on the release, response actions, risks and medical advice.

CERCLA section 101(14) defines the term ''hazardous substance'' by reference to provisions in other environmental statutes that identify substances as hazardous and to CERCLA section 102, which authorizes the EPA Administrator to designate additional hazardous substances when their release may present substantial danger to the public health or welfare or the environment. Pursuant to CERCLA section 102, the Administrator sets the quantities for hazardous substances known as reportable quantities (''RQ'') that, when released, require reporting. If the Administrator has not established an RQ, section 102(b) provides for a default RQ. A table at 40 CFR 302.4 lists the CERCLA hazardous substances with their RQs, and tables at 40 CFR part 355, appendices A & B list the EPCRA EHSs with their RQs.

Immediate notification provides emergency planning authorities with the information they need to respond to the release as quickly as possible in order to minimize the danger to human health and the environment, including dangers to children, other sensitive populations and sensitive ecosystems. The release reports also alert emergency planning personnel to the potential for future risks so that local communities can work with facilities to minimize those risks. Emergency planning authorities can also use the release reports to assess emergency planning needs, to identify and develop appropriate responses to acute as well as chronic exposure and to assess cumulative effects of chemical exposures from many different sources in local areas. EPCRA gives members of the public, including local communities and individuals, the right to know the types and amounts of releases of certain chemicals in their communities.

Exemption for Federally Permitted Releases

Congress exempted ''federally permitted releases'' as defined in CERCLA section 101(10) from the notification requirements in CERCLA section 103 and EPCRA section 304. The definition of federally permitted release in CERCLA section 101(10) specifically identifies releases that are regulated under other environmental programs, such as the National Pollutant Discharge Elimination System of the Clean Water Act; Resource Conservation and Recovery Act; and the Underground Injection Control program of the Safe Drinking Water Act, among others. Our guidance document only addresses certain air releases when the source of the release is regulated under the Clean Air Act (''CAA''). CERCLA section 101(10)(H) defines federally permitted releases under the CAA as:

> any emission into the air subject to a permit or control regulation under section 111, section 112, title I part C, title I part D, or State implementation plans submitted in accordance with section 110 of the Clean Air Act (and not disapproved by the Administrator of the Environmental Protection Agency), including any schedule or waiver granted, promulgated, or approved under these sections.

CERCLA section 101(10)(H); 42 U.S.C. 9601(10)(H)(internal citations omitted).

II. Purpose of Guidance

This guidance document discusses the most common questions we have received from the public on the federally permitted release definition and discusses the principles we consider most important in evaluating whether an air release may be considered a CERCLA section 101(10)(H) federally permitted release.

The Senate committee that considered the CERCLA definition of federally permitted release recognized that the CAA controls air pollutants in several ways:

> In the Clean Air Act, unlike some other Federal regulatory statutes, the control of hazardous air pollutant emissions can be achieved through a variety of means: express emissions limitations (such as control on the pounds of pollutant that may be discharged from a source during a given time); technology requirements (such as floating roof tanks on hydrocarbons in a certain vapor pressure range); operational requirements (such as start up or shut down procedures to control emissions during such operations); work practices (such as the application of water to suppress certain particulates); or other control practices. Whether control of hazardous substance emissions is achieved directly or indirectly, the means must be specifically designed to limit or eliminate emissions of a designated hazardous pollutant or a criteria pollutant. Senate Rep. 848, 96th Cong., 2d Sess. 49 (1980).

Because of the numerous programs under the CAA and their complexity, this guidance does not address each application of the exemption. This guidance is intended for you to use as a general guide to determine, on a case-by-case basis, whether an air release of a hazardous substance qualifies as a federally permitted release. You should consider any permit language as a whole rather than reviewing specific language in isolation and also look at all applicable control requirements in order to determine whether, taken together, they subject a release of a hazardous substance to a relevant CAA permit or control regulation.

The CERCLA, EPCRA and CAA statutory provisions and the EPA regulations described in this guidance contain legally binding requirements. This guidance does not substitute for those provisions or regulations, nor is it a regulation itself. Thus, it does not impose new legally-binding requirements on EPA, states or the regulated community, and may not

apply to particular situations depending upon the circumstances. We retain the discretion to adopt approaches that differ from this guidance when appropriate, and may change this guidance in the future. In implementing and enforcing the reporting requirements of the statutes, we will decide what position to take in each particular case based on the applicable statutes and regulations for each release. Interested parties are free to challenge our position in particular situations before the administrative or judicial courts, which ultimately decide how the exemption applies based on the statutes and regulations themselves.

III. Emission Exceedances of Permit Limits and Control Regulations

• I have discovered a violation at my facility which resulted in a release of a hazardous substance in excess of the CAA control regulation. Does this release qualify for the CERCLA section 101(10)(H) federally permitted release exemption?

The EPA Environmental Appeals Board (''EAB'') concluded that ''* * * a release 'subject to' Clean Air Act regulatory requirements must be in conformance with those requirements in order to be exempt from EPCRA and CERCLA emergency reporting provisions * * *'' In re Mobil Oil Corp., EPCRA Appeal No. 94–2, 5 EAD 490, 508, 1994 WL 544260 (EAB, Sept. 29, 1994).

The EAB reasoned that:

To adopt Mobil's argument that any noncomplying air release triggers the [federally permitted release] exemption so long as the pollutant released is addressed in some way in a permit or other Clean Air Act requirement would mean that potentially significant air releases would be exempt from EPCRA reporting obligations, regardless of the extent of the noncompliance or resulting environmental harm.

IV. Criteria Pollutants: Ozone (VOC), PM and NO_X

• My facility has a CAA permit which contains emission limits for VOC and PM and is not subject to NESHAPs. The facility releases are in compliance with the VOC or PM limits. Are the releases of hazardous substances that are also either VOCs or emitted as particulate matter federally permitted releases under CERCLA?

If you are in compliance with your federally enforceable CAA permit limit or control regulation for volatile organic compounds (''VOC'') or particulate matter (''PM''), and those limits or controls include conditions that, when viewed together, control the release of a constituent hazardous substance, such a release would likely qualify as a federally permitted release. The Senate Report language states that to qualify for the CERCLA 101(10)(H) federally permitted release exemption, the means of controlling the hazardous substance emissions must be ''* * * specifically designed to limit or eliminate emissions of a designated hazardous pollutant or a criteria pollutant'' (Senate Report No. 848 at 49). [1] Whether the hazardous substance or EHS is a criteria pollutant or a hazardous air pollutant, the permit limit or control should have the specific effect of limiting or eliminating the releases of the designated hazardous substance or EHS if releases of that hazardous substance or EHS are to qualify for the federally permitted release exemption.

When evaluating whether a release qualifies for the federally permitted release exemption, you should consider whether your federally enforceable CAA permit limit or the applicable control regulations limit or eliminate the release of the designated hazardous substance or EHS. Because of the variety of VOC and PM permit terms and controls, we cannot establish any ''bright line'' tests to determine whether a control regulation or permit limit for VOC or PM is adequate to qualify a release of a designated hazardous substance or EHS as a CERCLA federally permitted release. You should consider whether the permit provides direct or indirect control of a designated hazardous substance or EHS by reviewing the federally enforceable permit limits and control regulations that apply to your releases of hazardous substances or EHSs. Where the federally enforceable permit limits and control regulations, considered together, have the specific effect of limiting or eliminating releases of a hazardous substance or EHS, we will infer that these permit limits and control regulations were designed to achieve that result unless circumstances or evidence clearly indicate to the contrary. The following criteria may help you determine whether a permit limit or control requirement for VOC or PM has the specific effect of limiting or eliminating the release of a hazardous substance or EHS:

• Are the federally enforceable permit limits short term, or do the federally enforceable control requirements minimize the likelihood of a substantial release of a hazardous substance or EHS? If short term limits control releases of the hazardous substances or EHS, even when the limit is expressed in VOC or PM terms, the releases of those substances subject to short term limits would probably qualify for the CERCLA federally permitted release definition.

• Does the permit application or applicable regulation (including supporting materials such as preambles, technical background documents, or details in the permit application that are referenced in the permit) include information that clearly shows that the federally enforceable VOC or PM limits have the specific effect of limiting or eliminating the release of the designated hazardous substance or EHS? If so, then the releases of those substances would probably qualify for the CERCLA section 101(10)(H) federally permitted release exemption.

Permit limits and control regulations usually do not control or limit unanticipated releases such as accidents or malfunctions and for that reason such releases generally do not qualify for the CERCLA section 101(10)(H) federally permitted release exemption.

• If I am in compliance with my federally enforceable permit limit for NO_X issued under Title I of the CAA, would my release of NO and NO2 equal to or greater than the RQ qualify for the CERCLA section 101(10)(H) federally permitted release exemption?

Yes. NO_X permit limits and control regulations under CAA Title I are designed to regulate nitrogen oxide (''NO'') and nitrogen dioxide (''NO_2'') emissions, and their hazardous impacts are taken into consideration when establishing these limits. Thus, NO_X permit limits are sufficient to meet the CERCLA federally permitted release definition for releases of NO and NO_2. Accordingly, your releases of NO or NO_2 are federally permitted releases if they are in compliance with your NO_X permit limit.

V. Minor Sources

• NESHAP, SIP or other CAA permitting requirements are not applicable to my source because my emissions are below an annual threshold limit. Would my releases meet the definition of CERCLA section 101(10)(H) federally permitted release?

Releases in compliance with a federally enforceable threshold as well as releases that comply with any federally enforceable technology requirements, operational requirements, work practices or other control practices, would generally meet the definition of federally permitted releases in CERCLA section 101(10)(H) when the emission threshold limits or eliminates the release of the designated

[1] Hazardous substance or EHS include any pollutant for which a reportable quantity has been established under CERCLA or EPCRA.

hazardous substance or EHS at issue. Releases of hazardous substances or EHSs from the normal operations of such minor sources would qualify for the CERCLA section 101(10)(H) federally permitted release definition when the emissions of designated hazardous substances or EHSs are subject to the threshold limit imposed by law or regulation. For example, under the CAA section 112 ''area sources'' (sources that do not have the potential to emit 10 tons per year or more of any one HAP, or 25 tons per year or more of a combination of HAPs) do not have to comply with NESHAP regulations that apply to major sources only, as long as they stay below that threshold. If their emissions exceed this limit they must comply with the appropriate NESHAP standards for their major source. Releases of designated hazardous substances or EHSs from normal operations are limited by this standard and therefore meet the definition of federally permitted release in CERCLA 101(10)(H).

In addition to thresholds under the CAA section 112, some states have incorporated regulations into their federally enforceable CAA section 110 state implementation plans (''SIPs'') imposing federally enforceable thresholds on air toxics in addition to criteria pollutants such as NO_X or sulfur dioxide (SO_2). As long as a source complies with the emission (or potential-to-emit) thresholds, it does not have to comply with other CAA requirements. These sources are commonly referred to as minor sources. A release of a hazardous substance or EHS resulting from normal operations of a minor source that is in compliance with these SIP regulations generally meet the CERCLA definition of a federally permitted release. See section IV (Criteria Pollutants: VOC and PM) for a discussion on whether VOC or PM limits and controls qualify as CERCLA federally permitted releases for releases of designated hazardous substances or EHSs. If, as discussed in that section, federally enforceable VOC or PM thresholds for minor sources limit emissions of the designated hazardous substance or EHS, these releases would generally meet the definition of federally permitted release in CERCLA section 101(10)(H).

These thresholds, however, generally do not control unanticipated releases such as accidents or malfunctions. The thresholds for minor sources are usually only directed at the facility's releases from its normal operations. Even a very small source could have an accident or malfunction that causes a release of a hazardous substance or EHS that requires an immediate response. The Senate committee report stated that ''Accidents—whatever their cause—which result in, or can reasonably be expected to result in releases of hazardous pollutants would not be exempt from the requirements and liabilities of this bill. Thus, fires, ruptures, wrecks and the like invoke the response and liability provisions of the bill.'' Senate Report No. 96–848 at 48. Area sources and other sources that are subject to a regulation that limits their total annual emissions should generally report their releases at or above the RQ of hazardous substances and EHSs that are caused by accidents, malfunctions, unanticipated releases and other releases that are not part of the facility's normal operations.

VI. Waivers

• My hazardous release is subject to a waiver pursuant to CAA section 111. Would this release qualify for the CERCLA federally permitted release exemption?

Yes, your release subject to the waiver is a CERCLA federally permitted release. Section 101(10)(H) of CERCLA exempts releases subject to ''* * * any schedule or waiver granted, promulgated, or approved under * * *'' the CAA sections 110, 111, 112 and Title I Parts C and D. 42 U.S.C. 9601(10)(H)(internal citations omitted).

As an example, under section 111(j)(1) of the CAA, we may grant a waiver from a New Source Performance Standard (''NSPS'') in order to encourage the use of an innovative technological system or systems of continuous emission reduction. If the technology does not result in an emission reduction that equals or exceeds the applicable standard, we will terminate the waiver and establish a schedule for compliance. The release of a hazardous substance or EHS that would have been controlled by the NSPS without the waiver is a CERCLA federally permitted release, as long as it is in compliance with the terms of the CAA waiver.

VII. Accidents and Malfunctions

• I had an accidental release of a hazardous substance above the CERCLA RQ while I was operating consistent with my accident and malfunction plan. Would my release, qualify for the CERCLA section 101(10)(H) federally permitted release exemption?

In most circumstances, releases resulting from accidents and malfunctions do not qualify for the federally permitted release exemption as defined in CERCLA section 101(10)(H). Releases due to accidents and malfunctions, because they are by definition not anticipated, are difficult to subject to controls which limit or eliminate emissions. Congress did not intend to exempt unanticipated releases such as accidents and malfunctions from CERCLA section 103 and EPCRA section 304. As explained in the Senate Report, ''Accidents—whatever their cause—which result in, or can reasonably be expected to result in releases of hazardous pollutants would not be exempt from the requirements and liabilities of this bill. Thus, fires, ruptures, wrecks and the like invoke the response and liability provisions of the bill.'' Senate Report No. 96–848 at 48.

Although the CAA requires accident and malfunction plans in order to prevent, identify and minimize accidental releases, these plans may be too general to be considered specifically designed to limit or eliminate emissions of a designated hazardous pollutant or a criteria pollutant, and thus releases resulting from accidents and malfunctions would generally not qualify as CERCLA federally permitted releases.

For example, in *In re Borden Chemicals & Plastics, Co.,* [CERCLA]EPCRA 003–1992 (Order Granting Partial Accelerated Decision Concerning Liability, Feb. 18, 1993), the Administrative Law Judge concluded that a release is only a CERCLA federally permitted release if the regulation imposes an emission limit or otherwise controls the release. In Borden, the judge held that the discharge from an emergency relief valve was not a federally permitted release, regardless of whether the discharge violated the CAA, because the release was not controlled by the NESHAP regulation.

Nevertheless, we realize that there are a wide variety of approaches to dealing with accidents and malfunctions in CAA regulations, permits and SIPs. Accordingly, there may be unusual circumstances in which a release of a hazardous substance or EHS that resulted from an accident or malfunction might qualify for the federally permitted release exemption in section 101(10)(H) of CERCLA. Regardless, EPA strongly encourages the prompt reporting of any release associated with an accident or malfunction. In addition, remember that under many provisions in the CAA, in order for a release to qualify as an accident or malfunction it must not be preventable. Releases that were preventable may violate the general duty clause of the CAA.

VIII. Start-up and Shut-down

• I am operating under an approved start-up/shut-down plan. If I have a release of a hazardous substance during a start-up or shut-down, will it qualify as a federally permitted release?

If your release is in compliance with the requirements in an approved start-up/shut-down plan which contains federally enforceable procedures which limit or control your releases during start-up or shut-down, then your release would generally qualify for the federally permitted release exemption. As discussed above, like accidents and malfunctions, emissions from start-ups and shut-downs have been handled in a variety of ways in CAA regulations, permits and SIPs. In many instances, facilities must have a start-up and shut-down plan that sets forth procedures for operating and maintaining a source during those periods. See, e.g., 40 CFR 63.6(e)(3). Unlike malfunctions and accidents which are unpredictable, releases from start-ups or shut-downs may be anticipated and therefore they may be more likely to have emission limitations or controls.

However, if a release of a hazardous substance or EHS is exempt from CAA regulation, or is otherwise not subject to emission limits or other controls during the start-up or shut-down of an operation, then these uncontrolled releases do not qualify for the federally permitted release exemption and must comply with CERCLA and EPCRA notification requirements.

IX. Conclusion

The federally permitted release exemption to the CERCLA section 103 and EPCRA section 304 notification requirements exempts from the notification requirements certain air emissions of hazardous substances and EHSs when the release of the hazardous substance or EHS is subject to a permit or control regulation issued pursuant to CAA sections 111 and 112, Title I part C, Title I part D, or a section 110 SIP. Each facility is responsible for determining whether its hazardous substance and EHS releases qualify for the notification exemption in light of the particular CAA requirements that apply to the facility.

Appendix B—Enforcement Discretion

In a memorandum dated February 15, 2000, and in subsequent extensions dated September 13, 2000, November 30, 2000, April 20, 2001, July 31, 2001, October 10, 2001, January 16, 2002, and March 7, 2002, the Assistant Administrator of the Office of Enforcement and Compliance Assurance exercised discretion to not enforce against facilities for failure to report certain types of air releases until publication of the revised guidance. We are extending this discretion for 180 days following the date of this notice unless the release is:

(1) an unanticipated release, such as an accident or malfunction;

(2) a release in excess of a permit limit or control regulation as described in the EAB decision In re Mobil Oil Corp., EPCRA Appeal No. 94–2, 5 EAD 490 (EAB Sept. 29, 1994);

(3) a release from an emergency relief valve, as described in the ALJ's decision In re Borden Chemicals & Plastics, Co., [CERCLA] EPCRA 003–1992 (Order Granting Partial Accelerated Decision Concerning Liability, Feb. 18, 1993);

(4) a release from a source that is grandfathered and not subject to CAA permits or control regulations; or

(5) a release from a source that is otherwise exempt and not subject to any federally enforceable CAA permit or control regulation.

Furthermore, we recognize that certain uncontrolled air emissions of nitrogen oxide (''NO'') and nitrogen dioxide (''NO_2'') equal to or greater than the ten pound reportable quantity may rarely require a government response. The Agency supports the proposal of an administrative reporting exemption for certain NO and NO_2 air releases which could result in these releases not being required to be reported under CERCLA section 103 and EPCRA section 304. EPA will move forward with the proposal as soon as resources become available. Until the process for an administrative reporting exemption is complete, or until we publish a notice stating otherwise, we will exercise enforcement discretion and not enforce against owners/operators or persons in charge for failure to report air releases of NO and NO_2 that would otherwise trigger a reporting obligation under CERCLA section 103 and EPCRA section 304, unless such releases are the result of an accident or malfunction.

[FR Doc. 02–9322 Filed 4–16–02; 8:45 am]

BILLING CODE 6560–50–P

FEDERAL COMMUNICATIONS COMMISSION

Notice of Public Information Collection(s) Being Reviewed by the Federal Communications Commission

April 8, 2002.

SUMMARY: The Federal Communications Commission, as part of its continuing effort to reduce paperwork burden invites the general public and other Federal agencies to take this opportunity to comment on the following information collection(s), as required by the Paperwork Reduction Act of 1995, Public Law 104–13. An agency may not conduct or sponsor a collection of information unless it displays a current valid control number. No person shall be subject to any penalty for failing to comply with a collection of information subject to the Paperwork Reduction Act (PRA) that does not display a valid control number. Comments are requested concerning (a) whether the proposed collection of information is necessary for the proper performance of the functions of the Commission, including whether the information shall have practical utility; (b) the accuracy of the Commission's burden estimate; (c) ways to enhance the quality, utility, and clarity of the information collected; and (d) ways to minimize the burden of the collection of information on the respondents, including the use of automated collection techniques or other forms of information technology.

DATES: Written comments should be submitted on or before June 17, 2002. If you anticipate that you will be submitting comments, but find it difficult to do so within the period of time allowed by this notice, you should advise the contact listed below as soon as possible.

ADDRESSES: Direct all comments to Les Smith, Federal Communications Commission, Room 1–A804, 445 12th Street, SW, Washington, DC 20554, or via the Internet to *lesmith@fcc.gov.*

FOR FURTHER INFORMATION CONTACT: For additional information or copies of the information collection(s) contact Les Smith at 202–418–0217 or via the Internet at *lesmith@fcc.gov.*

SUPPLEMENTARY INFORMATION:

OMB Control Number: 3060–0674.

Title: Section 76.931, Notification of Basic Tier Availability, and Section 76.932, Notification of Proposed Rate Increase.

Form Number: N/A.

Type of Review: Extension of currently approved collection.

Respondents: Business or other for-profit entities.

Number of Respondents: 11,365.

Estimated Time per Response: 2.25 hours.

Frequency of Response: On occasion reporting requirements; Third party disclosure.

Total Annual Burden: 25,572 hours.

Total Annual Costs: None.

Needs and Uses: 47 CFR 76.931 requires each cable operator to provide written notification to subscribers of the availability of basic tier service by November 30, 1993, or three billing cycles from September 1, 1993, and to new subscribers at the time of installation. This notification is to include: (a) What basic tier service is available; (b) cost per month for basic tier service; and (c) list of all services included in the basic service tier. 47 CFR 76.932 requires each cable operator

to provide written notice to subscribers of any increase in the price to be charged for the basic service tier or associated equipment at least thirty days before any proposed increase is effective.

OMB Control Number: 3060–0888.

Title: Part 76, Cable Television Service Pleading and Complaint Rules.

Form Number: N/A.

Type of Review: Extension of currently approved collection.

Respondents: Business or other for-profit entities; Individuals or households.

Number of Respondents: 400.

Estimated Time per Response: 4 to 40 hours.

Total Annual Burden: 8,800 hours.

Total Annual Costs: $1,204,000.

Needs and Uses: On January 8, 1999, the Commission released a Report and Order (R&O), *In the matter of the 1998 Biennial Regulatory review; Part 76 Cable Television Service Pleading and Complaint Rules.* This proceeding was initiated in conjunction with the Commission's 1998 Biennial Regulatory Review pursuant to section 11 of the Telecommunications Act of 1996. The R&O adopted rules to eliminate redundant requirements, to expand the types of submissions for petitions for special relief, to standardize filing procedures for finding effective competition, and to establish standard provisions for uniform filing formats, deadlines, and other procedural requirements for pleadings, *i.e.,* waivers, enforcement, show cause, forfeiture, and declaratory ruling procedures, filed under 47 CFR part 76 of the Commission's Rules.

OMB Control Number: 3060–1008.

Title: Reallocation and Service Rules for the 698–746 MHz Band (TV Channels 52–59).

Form Number: N/A.

Type of Review: Extension of a currently approved collection.

Respondents: Business or other for-profit entities; and State, Local or Tribal Government.

Number of Respondents: 734.

Frequency of Response: Recordkeeping; On occasion reporting requirement, Third party disclosure requirement.

Total Annual Burden: 367 hours.

Total Annual Cost: None.

Needs and Uses: On December 12, 2001, the FCC adopted a Final Rule in GN Docket No. 01–74, FCC 01–364, *Reallocation and Service Rules for the 698–746 MHz Spectrum Band (Television Channels 52–59).* Following a Congressional mandate that the FCC auction off the Lower 700 MHz Band (698–746 MHz) spectrum by September 30, 2002, the FCC adopted allocation and service rules for this spectrum band and scheduled the spectrum auction for June 19, 2002, see Public Notice, DA 02–2002 (January 24, 2002). The Report and Order supports the development of new services in the Lower 700 MHz Band and also protects existing television operations that occupy the band throughout the transition to digital television. Under 47 CFR 27.50(c)(5), licensees that intend to operate a base or fixed station at a power level greater than 1 kW ERP must issue a public notice (which includes the station's location and operating parameters, the ERP, antenna coordinates, antenna height above ground, and vertical antenna pattern) at least 90 days prior to commencing station operations to the FCC and to all authorized licensees that operate a base or fixed station on an adjacent spectrum block at a location within 75 kms of the based or fixed station operating at a power level greater than 1 kW ERP.

OMB Control Number: 3060–0798.

Title: FCC Application for Wireless Telecommunications Bureau Radio Service Authorization.

Form Number: FCC 601.

Type of Review: Extension of a currently approved collection.

Respondents: Business or other for-profit entities; Not-for-profit institutions; Individuals or households; and State, Local or Tribal governments.

Number of Respondents: 241,335.

Estimated Time per Response: 0.5 to 1.25 hours.

Frequency of Response: On occasion and 10 year annual reporting requirements; Third party disclosure.

Total Annual Burden: 211,169 hours.

Total Annual Cost: $48,267,100.

Needs and Uses: FCC Form 601 is a consolidated, multi-part application or ''long form'' for market-based licensing and site-by-site licensing in the Wireless Telecommunications Bureau's (WTB) Radio Services' Universal Licensing System (ULS). On December 12, 2001, the FCC adopted a Final Rule in GN Docket No. 01–74, FCC 01–364, *Reallocation and Service Rules for the 698–746 MHz Spectrum Band (Television Channels 52–59).* Pursuant to adoption of the Report and Order, the FCC has revised Form 601, which will be used to determine the basic eligibility and qualifications of auction winners to become licensees. Form 601 was also revised to ease the filing burden for applicants and others who used the form by making various other changes, *i.e.,* correcting mailing and web site addresses, removing the Taxpayer Identification Number, and making other miscellaneous edits.

OMB Control Number: 3060–0706.

Title: Cable Act Reform.

Form Number: N/A.

Type of Review: Extension of currently approved collection.

Respondents: Business or other for-profit entities.

Number of Respondents: 950.

Estimated Time per Response: 1 to 8 hours.

Frequency of Response: On occasion reporting requirements; Third party disclosure.

Total Annual Burden: 3,900.

Total Annual Costs: $4,000.

Needs and Uses: On March 29, 1999, the FCC released a Report and Order (R&O), FCC 99–57, which further amended the Commission's cable television rules pursuant to the Telecommunications Act of 1996. With this R&O, the FCC has accounted for various requirements in its rules not already accounted for in the initial and final rules. The regulations serve a variety of purposes for subscribers, cable operators, franchising authorities, and the FCC, *i.e.,* 47 CFR 76.952 requires a cable operator to include the franchising authority contact information in a subscriber's monthly billing statement; 47 CFR 76.990 requires a cable operator to certify in writing to the franchising authority that it qualifies as ''small cable operator;'' and 47 CFR 76.1404 requires a local exchange carrier to file contract information with the FCC to determine whether its use of a cable operator's facilities is reasonably limited in scope and duration.

OMB Control Number: 3060–0742.

Title: Telephone Number Portability (47 CFR part 52, subpart C, sections 52.21–52.33) and CC Docket No. 95–116.

Form Number: N/A.

Type of Review: Revision to a currently approved collection.

Respondents: Business or other for-profit entities.

Number of Respondents: 1,858.

Estimated Time per Response: 7.34 hours (avg).

Frequency of Response: Recordkeeping; On occasion and annual reporting requirements; Third Party Disclosure.

Total Annual Burden: 13,634 hours.

Total Annual Cost: $76,635.

Needs and Uses: 47 CFR 52.21–52.33 implement the requirements that local exchange carriers (LECs) provide number portability. In a Memorandum, Opinion, and Order on Reconsideration issued in CC Docket No. 95–116, the FCC implemented new and/or modified

regulations that require each multi-region carrier to calculate its share of local number portability (LNP) administration costs. Any carrier that cannot divide its revenue by LNP region but chooses to allocate such revenue by subscriber percentages must file a certification with the FCC. To ensure that if a non-LNP capable incumbent LEC, participating in an extended area service calling plan with an LNP-capable carrier, complies with LNP cost recovery law and rules, the carrier must file a tariff with the FCC, if the carrier seeks to recover its query and LNP administration costs.

OMB Control Number: 3060–0395.

Title: The ARMIS USOA Report (ARMIS Report 43–02); The ARMIS Service Quality Report (ARMIS Report 43–05); The ARMIS Infrastructure Report (ARMIS Report 43–07).

Form Numbers: FCC Reports 43–02, 43–05, and 43–07.

Type of Review: Extension of a currently approved collection.

Respondents: Business or other for-profit entities.

Number of Respondents: 50.

Estimated Time per Response: 587.3 hours (avg).

Frequency of Response: Recordkeeping; Annual reporting requirement.

Total Annual Burden: 29,366 hours.

Total Annual Cost: None.

Needs and Uses: Under section 220 of the Communications Act of 1934, as amended, 47 USC 220, FCC may prescribe the forms of accounts, records, and memoranda of the movement of traffic, receipts, and expenditures of monies to be kept by carriers subject to this Act. Section 219(b) of the Communications Act of 1934, as amended, 47 USC 219(b), requires any carrier subject to this Act to file monthly earnings and expense reports and periodical and/or special reports concerning all other matters with the FCC, as authorized by 47 CFR 43.21. ARMIS was implemented to facilitate the timely and efficient analysis of revenue requirements, rates of return, and price caps; to provide an improved basis for audits and other oversight functions; and to enhance the Commission's ability to quantify the effects of alternative policy.

FCC Report 43–02—The ARMIS 43–02 Report, contains company-wide data for each account specified in the Uniform System of Accounts (''USOA''). It provides the annual operating results of the carriers' activities for every account in the USOA. Mid-sized LECs are not required to file the ARMIS FCC Report 43–02. *FCC Report 43–05*—The ARMIS 43–05 Report, collects trend data, etc. on holding companies and on service quality levels under price cap regulations, i.e., interexchange access service installation and repair intervals, local service installation and repair intervals, trunk blockage, and total switch downtime for price cap companies. *FCC Report 43–07*—The ARMIS 43–07 Report, captures trends in telephone industry infrastructure development under price cap regulation, i.e., switch deployment and capabilities data.

OMB Control Number: 3060–0511.

Title: ARMIS Access Report.

Form Number: FCC Report 43–04.

Type of Review: Extension of a currently approved collection.

Respondents: Business or other for-profit entities.

Number of Respondents: 121.

Frequency of Response: Annual reporting requirement.

Estimated Time per Response: 157 hours (avg).

Total Annual Burden: 18,997 hours.

Total Annual Cost: None.

Needs and Uses: Under section 220 of the Communications Act of 1934, as amended, 47 U.S.C. 220, FCC may prescribe the forms of accounts, records, and memoranda of the movement of traffic, receipts, and expenditures of monies to be kept by carriers subject to this Act. Section 219(b) of the Communications Act of 1934, as amended, 47 U.S.C. 219(b), requires any carrier subject to this Act to file monthly earnings and expense reports and periodical and/or special reports concerning all other matters with the FCC, as authorized by 47 CFR 43.21. ARMIS was implemented to facilitate the timely and efficient analysis of revenue requirements, rates of return, and price caps; to provide an improved basis for audits and other oversight functions; and to enhance the Commission's ability to quantify the effects of alternative policy. The ARMIS 43–04 Report monitors revenue requirements, joint cost allocations, jurisdictional separations, and access charges. Mid-sized carriers are not required to file the FCC Report 43–04.

OMB Control Number: 3060–0513.

Title: ARMIS Joint Cost Report.

Form Number: FCC Report 43–03.

Type of Review: Extension of a currently approved collection.

Respondents: Business or other for-profit entities.

Number of Respondents: 121.

Estimated Time per Response: 83 hours (avg).

Frequency of Response: Annually.

Total Annual Burden: 10,043 hours.

Total Annual Cost: None.

Needs and Uses: Under section 220 of the Communications Act of 1934, as amended, 47 U.S.C. 220, FCC may prescribe the forms of accounts, records, and memoranda of the movement of traffic, receipts, and expenditures of monies to be kept by carriers subject to this Act. Section 219(b) of the Communications Act of 1934, as amended, 47 U.S.C. 219(b), requires any carrier subject to this Act to file monthly earnings and expense reports and periodical and/or special reports concerning all other matters with the FCC, as authorized by 47 CFR 43.21. ARMIS was implemented to facilitate the timely and efficient analysis of revenue requirements, rates of return, and price caps; to provide an improved basis for audits and other oversight functions; and to enhance the Commission's ability to quantify the effects of alternative policy. The ARMIS 43–03 Report is used to administer the FCC's joint cost rules and to analyze data to prevent cross-subsidization of nonregulated operations by the regulated operations of Tier 1 carriers. Mid-sized carriers are not required to file FCC Report 43–03 on April 1, 2002.

OMB Control Number: 3060–0855.

Title: Telecommunications Reporting Worksheet and Associated Requirements, CC Docket No. 96–45.

Form Number: FCC Form 499 (FCC Forms 499–A and 499–Q).

Type of Review: Extension of a currently approved collection.

Respondents: Business or other for-profit entities.

Number of Respondents: 5,500.

Estimated Time per Response: 15 hours (avg).

Frequency of Response: Recordkeeping; On occasion, quarterly, and annually reporting requirements; Third party disclosure.

Total Annual Burden: 82,487 hours.

Total Annual Cost: $14,000.

Needs and Uses: Pursuant to the Communications Act of 1934, as amended, telecommunications carriers (and certain other providers of telecommunications services) must contribute to the support and cost recovery mechanisms for telecommunications relay services, numbering administration, number portability, and universal service. Respondents file their gross-billed end-user telecommunications revenues on a quarterly basis on FCC Form 499–Q, and on an annual basis on FCC Form 499–A. Carriers are permitted to consolidate filing if the filing entity certifies that certain conditions have been met.

Federal Communications Commission.

William F. Caton,

Acting Secretary.

[FR Doc. 02–9279 Filed 4–16–02; 8:45 am]

BILLING CODE 6712–01–P

FEDERAL COMMUNICATIONS COMMISSION

[GN Docket No. 00–185; FCC 02–77]

Inquiry Concerning High-Speed Access to the Internet Over Cable and Other Facilities; Internet Over Cable Declaratory Ruling

AGENCY: Federal Communications Commission.

ACTION: Notice.

SUMMARY: On March 15, 2002, the Commission released a Declaratory Ruling in Inquiry Concerning High-Speed Access to the Internet Over Cable and Other Facilities and Internet Over Cable Declaratory Ruling, GN Docket No. 00–185. The Commission ruled that cable modem service, as it is currently offered, is an interstate information service, not a cable service, and that there is no separate offering of telecommunications service. Consistent with §§ 1.103 and 1.4(b)(2) of the Commission's rules, 47 CFR 1.103, 1.4(b)(2), the effective date for the Declaratory Ruling is the date of release of the ruling, March 15, 2002.

Copies of the Declaratory Ruling may be obtained on the Internet through *http://www.fcc.gov/Bureaus/Cable/News_Releases/2002/nrcb0201.html,* or through Steve Garner, Media Bureau, who can be reached at (202) 418–1063 or via Internet at *sgarner@fcc.gov.*

FOR FURTHER INFORMATION CONTACT: Steve Garner, Media Bureau, at (202) 418–1063 or via Internet at *sgarner@fcc.gov.*

Federal Communications Commission.

William F. Caton,

Acting Secretary.

[FR Doc. 02–9103 Filed 4–16–02; 8:45 am]

BILLING CODE 6712–01–P

FEDERAL RESERVE SYSTEM

Change in Bank Control Notices; Acquisition of Shares of Bank or Bank Holding Companies

The notificants listed below have applied under the Change in Bank Control Act (12 U.S.C. 1817(j)) and § 225.41 of the Board's Regulation Y (12 CFR 225.41) to acquire a bank or bank holding company. The factors that are considered in acting on the notices are set forth in paragraph 7 of the Act (12 U.S.C. 1817(j)(7)).

The notices are available for immediate inspection at the Federal Reserve Bank indicated. The notices also will be available for inspection at the office of the Board of Governors. Interested persons may express their views in writing to the Reserve Bank indicated for that notice or to the offices of the Board of Governors. Comments must be received not later than May 2, 2002.

A. Federal Reserve Bank of Atlanta (Cynthia C. Goodwin, Vice President) 1000 Peachtree Street, N.E., Atlanta, Georgia 30309–4470:

1. Robert C. Glustrom, Atlanta, Georgia; Michael K. Sandberg, Liphook, England; to acquire additional voting shares of Broadstreet, Inc., Atlanta, Georgia, and thereby indirectly acquire additional voting shares of AmTrade International Bank of Georgia, Atlanta, Georgia.

In connection with this application, Rick H. Singer, New York, New York, also has applied to acquire voting shares of Broadstreet, Inc., Atlanta, Georgia, and thereby indirectly acquire voting shares of AmTrade International Bank of Georgia, Atlanta, Georgia.

Board of Governors of the Federal Reserve System, April 12, 2002.

Robert deV. Frierson,

Deputy Secretary of the Board.

[FR Doc. 02–9362 Filed 4–16–02; 8:45 am]

BILLING CODE 6210–01–S

FEDERAL RESERVE SYSTEM

Formations of, Acquisitions by, and Mergers of Bank Holding Companies

The companies listed in this notice have applied to the Board for approval, pursuant to the Bank Holding Company Act of 1956 (12 U.S.C. 1841 *et seq.*) (BHC Act), Regulation Y (12 CFR Part 225), and all other applicable statutes and regulations to become a bank holding company and/or to acquire the assets or the ownership of, control of, or the power to vote shares of a bank or bank holding company and all of the banks and nonbanking companies owned by the bank holding company, including the companies listed below.

The applications listed below, as well as other related filings required by the Board, are available for immediate inspection at the Federal Reserve Bank indicated. The application also will be available for inspection at the offices of the Board of Governors. Interested persons may express their views in writing on the standards enumerated in the BHC Act (12 U.S.C. 1842(c)). If the proposal also involves the acquisition of a nonbanking company, the review also includes whether the acquisition of the nonbanking company complies with the standards in section 4 of the BHC Act (12 U.S.C. 1843). Unless otherwise noted, nonbanking activities will be conducted throughout the United States. Additional information on all bank holding companies may be obtained from the National Information Center website at www.ffiec.gov/nic/.

Unless otherwise noted, comments regarding each of these applications must be received at the Reserve Bank indicated or the offices of the Board of Governors not later than May 10, 2002.

A. Federal Reserve Bank of Kansas City (Susan Zubradt, Assistant Vice President) 925 Grand Avenue, Kansas City, Missouri 64198–0001:

1. First Capital Investments L.L.C., Lee's Summit, Missouri; to become a bank holding company by acquiring 24.95 percent of the voting shares of 1st Financial Bancshares, Inc., Shawnee Mission, Kansas, and thereby indirectly acquire voting shares of 1st Financial Bank, Overland Park, Kansas, and Centerville State Bank, Centerville, Kansas.

In connection with this application, Applicant also has applied to indirectly acquire voting shares of Sylvan Agency, Inc., Sylvan Grove, Kansas, and thereby engage in insurance activities in a town of less than 5,000 in population, pursuant to § 225.28(b)(11)(iii)(A) of Regulation Y.

Board of Governors of the Federal Reserve System, April 11, 2002.

Robert deV. Frierson,

Deputy Secretary of the Board.

[FR Doc. 02–9250 Filed 4–16–02; 8:45 am]

BILLING CODE 6210–01–S

FEDERAL TRADE COMMISSION

Granting of Request for Early Termination of the Waiting Period Under the Premerger Notification Rules

Section 7A of the Clayton Act, 15 U.S.C. 18a, as added by Title II of the Hart-Scott-Rodino Antitrust Improvements Act of 1976, requires persons contemplating certain mergers or acquisitions to give the Federal Trade Commission and the Assistant Attorney General advance notice and to wait designated periods before consummation of such plans. Section 7A(b)(2) of the Act permits the agencies, in individual cases, to terminate this waiting period prior to its expiration and requires that notice of this action be published in the **Federal Register.**

The following transactions were granted early termination of the waiting period provided by law and the premerger notification rules. The grants were made by the Federal Trade Commission and the Assistant Attorney General for the Antitrust Division of the Department of Justice. Neither agency intends to take any action with respect to these proposed acquisitions during the applicable waiting period.

Trans No.	Acquiring	Acquired	Entities
Transactions Granted Early Termination, 03/19/2002			
20020526	Provident Financial Group	Pomeroy Computer Resources, Inc	Technology Integration Financial Services, Inc. TIFS Advisory Services, Inc.
20020553	American Capital Strategies, Ltd	Mr. Peter J. and Caroline Striano	Uni-Data and Communications, Inc. Uni-Data Holdings (No. 1), Inc. Uni-Data Holdings (No. 2), Inc. Unity Electric Co., Inc.
20020555	Group 4 Falck A/S	George R. Wackenhut	The Wackenhut Corporation. Wackenhut Corrections Corporation.
Transactions Granted Early Termination, 03/22/2002			
20020491	OCM Principal Opportunities Fund II, LP	Philip F. Anschutz	Regal Entertainment Group.
20020493	Greenwich Street Capital Partners II, L.P .	Philip F. Anschutz	Regal Entertainment Group.
20020507	Massachusetts Mutual Life Insurance Company .	Thomas G. Macrini	Gulf Investment Management, Inc.
20020508	Sun Life Financial Services of Canada Inc .	Clarica Life Insurance Company	Clarica Life Insurance Company.
20020510	University of Alabama Health Services Foundation, P.C .	Bessemer Carraway Medical Center	Bessemer Carraway Medical Center.
20020515	FPL Group, Inc	Innogy Holdings plc	Delaware Mountain Wind Farm, L.P. NWP Indian Mesa Wind Farm L.P. Pennsylvania Wind Farms LLC.
20020523	First Reserve Fund IX, L.P	Pride International Inc	Pride International Inc.
20020527	Health Management Associates, Inc	Manor Care, Inc	HCR Manorcare Mesquite, L.P.
20020528	Adobe Systems Incorporated	Accelio Corporation	Accelio Corporation.
20020538	Legato Systems, Inc.	OTG Software, Inc	OTG Software, Inc.
20020539	Richard A. Kay	Legato Systems, Inc	Legato Systems, Inc.
20020546	St. Luke's Episcopal Health System	The Methodist Health Care System	KS Management Services, L.L.P.
20020550	Esprit Holdings Limited	Esprit Holdings, Inc	Espirt de Corp.
20020556	Deutsche Bank AG	RoProperty Holding B.V	RoPro U.S. Holding, Inc.
Transactions Granted Early Termination, 03/25/2002			
20020439	Quest Diagnostics Incorporated	Golder Thoma Cressey, Rauner Fund V, L.P .	American Medical Laboratories, Incorporated.
20020514	United Technologies Corporation	Eric A. Dermond	Derco Holding, Ltd. Tower Avenue Holdings, LLP
20020521	Sumner M. Redstone	Young Broadcasting Inc	Fidelity Broadcasting, Inc. Young Broadcasting of Los Angeles, Inc.
20020532	First Data Corporation	SunTrust Banks, Inc	SunTrust Banks, Inc.
20020557	Scholastic Corporation	J.R. Shaw	Klutz.
20020563	Sanofi-Synthelabo	Pharmacia Corporation	Lorex Pharmaceuticals.
20020564	ICN Pharmaceuticals, Inc	Circe Biomedical, Inc	Circe Biomedical, Inc.
20020572	Philip H. Knight	Robert M. Hurley and Shelley A. Hurley	Hurley International LLC.
20020577	Automatic Data Processing, Inc	Digital Motorworks Holdings, Inc	Digital Motorworks Holdings, Inc.
20020582	Value Click, Inc	Be Free, Inc	Be Free, Inc.
Transactions Granted Early Termination, 03/26/2002			
20020540	First Data Corporation	Paymap Inc	Paymap Inc.
20020554	Entergy Corporation	Vermont Yankee Nuclear Power. Corporation	Vermont Yankee Nuclear Power Corporation.
20020565	Carlyle Partners III, L.P	Sippican, Inc	Polaris Contract Manufacturing, Inc. Sippican Ocean Systems, Inc. Sippican, Inc.
20020568	Intersil Corporation	Elantec Semiconductor, Inc	Elantec Semiconductor, Inc.
Transactions Granted Early Termination, 03/27/2002			
20020561	Gerald W. Schwartz	James J. Loeks & Barrie Lawson Loeks	Loeks-Star Partners.
20020583	GUS plc	Homestore.com, Inc	Homestore Consumer Information Corp.

Trans No.	Acquiring	Acquired	Entities
Transactions Granted Early Termination, 03/29/2002			
20020403	Reuters Group PLC	Talarian Corporation	Talarian Corporation.
20020571	Executive Holdings, L.P	Cagle's, Inc	Cagle Foods JV, L.L.C.
20020574	Cardinal Health, Inc	Alfred G. Childers	Magellan Laboratories Incorporated.
20020575	Cardinal Health, Inc	W. Lowry Caudill	Magellan Laboratories Incorporated.
20020585	Retirement Residences Real Estate Investment Trust .	CPL Long Term Care Real Estate Investment Trust .	CPL Long Term Care Real Estate Investment Trust.
20020586	Harvest/AMI Holding Inc	Associated Materials Incorporated	Associated Materials Incorporated.
20020588	AOL Time Warner Inc	AOL Time Warner Inc	Staten Island Cable, LLC.
20020589	Dominion Resources, Inc	Mirant Corporation	Mirant State Line Ventures, Inc.
20020590	InterCept, Inc	Internet Billing Company, Ltd	Internet Billing Company, Ltd.
20020591	Cox Enterprises, Inc	Cox Enterprises, Inc	TWC Cable Partners.
20020595	Jones Apparel Group, Inc	Moises Khafif	Gloria Vanderbilt Apparel Corp.
20020596	Jones Apparel Group, Inc	Hendrik J. Keilman	Gloria Vanderbilt Trademark B.V.
20020597	Long Point Capital Fund, L.P	American Architectural Products Corporation .	Eagle & Taylor Company.
20020598	Grupo Dragados, S.A	Hollandsche Beton Groep, NV	Hollandsche Beton Groep, NV
20020603	Clayton, Dubilier & Rice Fund V Limited Partnership .	Edward J. Davidson	CMSR Reinsurance, Ltd.; Cooperative Resources Services, Inc. Cooperative Mortgage Services, Inc.; CRS Acquisition Corp. Corporate Transfer Services, Inc.; CRS Title Agency, Inc. ProSource Properties Ltd.; U.S. Relocation Services, Inc.

FOR FURTHER INFORMATION CONTACT: Sandra M. Peay or Chandra L. Kennedy, Contact Representatives, Federal Trade Commission, Premerger Notification Office, Bureau of Competition, Room 303, Washington, DC 20580, (202) 326–3100.

By Direction of the Commission

Donald S. Clark,

Secretary.

[FR Doc. 02–9273 Filed 4–16–02; 8:45 am]

BILLING CODE 6750–01–M

DEPARTMENT OF HEALTH AND HUMAN SERVICES

Agency for Toxic Substances and Disease Registry

Community/Tribal Subcommittee and the Board of Scientific Counselors, Agency for Toxic Substances and Disease Registry: Meetings

In accordance with section 10(a)(2) of the Federal Advisory Committee Act (Pub. L. 92–463), the Agency for Toxic Substances and Disease Registry (ATSDR) announces the following subcommittee and committee meetings.

Name: Community/Tribal Subcommittee.

Times and Dates: 9 a.m.–5 p.m., May 7, 2002; 8:30 a.m.–5 p.m., May 8, 2002.

Place: Sheraton Colony Square Hotel, 188 14th Street, Atlanta, Georgia, 30361.

Status: Open to the public, limited by the available space. The meeting room accommodates approximately 50 people.

Purpose: This subcommittee brings to the Board advice, citizen input, and recommendations on community and tribal programs, practices, and policies of the Agency.

Matters to be Discussed: Agenda items include an overview of the Office of Regional Operations; discussion on ATSDR's training courses; discussion on ATSTR's Disease Registry activities, highlights from the new Public Health Assessment Guidance Manual; update on the CTS Evaluation; overview of Public Health Assessment; review of Action Items; and a report on nomination of four new Special Consultants.

Name: Board of Scientific Counselors, ATSDR.

Times and Dates: 8:30 a.m.–4:30 p.m., May 9, 2002; 8:30 a.m.–12:10 p.m., May 10, 2002.

Place: Sheraton Colony Square Hotel, 188 14th Street, Atlanta, Georgia, 30361.

Status: Open to the public, limited by the available space. The meeting room accommodates approximately 50 people.

Purpose: The Board of Scientific Counselors, ATSDR, advises the Secretary and the Administrator, ATSDR, on ATSDR programs to ensure scientific quality, timeliness, utility, and dissemination of results. Specifically, the Board advises on the adequacy of science in ATSDR-supported research, emerging problems that require scientific investigations, accuracy and currency of the science in ATSDR reports, and program areas to emphasize or de-emphasize. In addition, the Board recommends research programs and conference support for which the Agency awards grants to universities, colleges, research institutions, hospitals, and other public and private organizations.

Matters to be Discussed: Agenda will include a review of Action Items; updates on the Agenda for Public Health Environmental Research; update of the CTS Evaluation; discussion on the formation of the Health Department Subcommittee; discussion on New Directions for Health Education and Promotion; presentation on the performance measures and strategic plan; update on the Bio-Chem Terrorism Developments; update on the Child Health Workgroup; discussion on the World Trade Center Residential Sampling, Herculaneum, Calcasieu Parish, and anthrax activities.

Written comments are welcomed and should be received by the contact person listed below prior to the opening of the meeting.

Agenda items are subject to change as priorities dictate.

CONTACT PERSON FOR MORE INFORMATION: Robert Spengler, Sc.D., Executive Secretary, BSC, ATSDR, M/S E–28, 1600 Clifton Road, NE, Atlanta, Georgia 30333, telephone 404/498–0003.

The Director, Management Analysis and Services Office, has been delegated the authority to sign **Federal Register** notices pertaining to announcements of meetings and other committee management activities for both CDC and ATSDR.

Dated: April 11, 2002.

Alvin Hall,

Acting Director, Management Analysis and Services Office, Centers for Disease Control and Prevention.

[FR Doc. 02–9269 Filed 4–16–02; 8:45 am]

BILLING CODE 4163–70–P

DEPARTMENT OF HEALTH AND HUMAN SERVICES

Centers for Disease Control and Prevention

[30DAY–25–02]

Agency Forms Undergoing Paperwork Reduction Act Review

The Centers for Disease Control and Prevention (CDC) publishes a list of information collection requests under review by the Office of Management and Budget (OMB) in compliance with the Paperwork Reduction Act (44 U.S.C. Chapter 35). To request a copy of these requests, call the CDC Reports Clearance Officer at (404) 498–1210. Send written comments to CDC, Desk Officer, Human Resources and Housing Branch, New Executive Office Building, Room 10235, Washington, DC 20503. Written comments should be received within 30 days of this notice.

Proposed Project: Weekly Morbidity and Mortality Reports and Annual Morbidity Series—OMB #0920–0007—Extension—Epidemiology Program Office (EPO), Centers for Disease Control and Prevention (CDC). In 1878, Congress authorized the U.S. Marine Hospital Service (later renamed the U.S. Public Health Service (PHS)) to collect morbidity reports on cholera, smallpox, plague, and yellow fever from U.S. consuls overseas; this information was to be used for instituting quarantine measures to prevent the introduction and spread of these diseases into the United States. In 1879, a specific Congressional appropriation was made for the collection and publication of reports of these notifiable diseases. The authority for weekly reporting and publication was expanded by Congress in 1893 to include data from state and municipal authorities throughout the United States. To increase the uniformity of the data, Congress enacted a law in 1902 directing the Surgeon General of the Public Health Service (PHS) to provide forms for the collection and compilation of data and for the publication of reports at the national level.

Reports on notifiable diseases were received from very few states and cities prior to 1900, but gradually more states submitted monthly and annual summaries. In 1912, state and territorial health authorities in conjunction with PHS recommended immediate telegraphic reports of five diseases and monthly reporting by letter of 10 additional diseases, but it was not until after 1925 that all states reported regularly. In 1942, the collection, compilation, and publication of morbidity statistics, under the direction of the Division of Sanitary Reports and Statistics, PHS, was transferred to the Division of Public Health Methods, PHS.

A PHS study in 1948 led to a revision of the morbidity reporting procedures, and in 1949 morbidity reporting activities were transferred to the National Office of Vital Statistics. Another committee in PHS presented a revised plan to the Association of State and Territorial Health Officers (ASTHO) at its meeting in Washington, DC, October 1950. ASTHO authorized a Conference of State and Territorial Epidemiologists (CSTE) for the purpose of determining the diseases that should be reported by the states to PHS. Beginning in 1951, national meetings of CSTE were held every two years until 1974, then annually thereafter.

In 1961, responsibility for the collection of data on nationally notifiable diseases and deaths in 122 U.S. cities was transferred from the National Office of Vital Statistics to CDC. For 37 years the Morbidity and Mortality Weekly Report (MMWR) has consistently served as CDC's premier communication channel for disease outbreaks and trends in health and health behavior. In collaboration with the Council of State and Territorial Epidemiologists (CSTE), CDC has demonstrated the efficiency and effectiveness of computer transmission of data. The data collected electronically for publication in the MMWR provides information which CDC and State epidemiologists use to detail and more effectively interrupt outbreaks. Reporting also provides the timely information needed to measure and demonstrate the impact of changed immunization laws or a new therapeutic measure.

Users of data include, but are not limited to, congressional offices, state and local health agencies, health care providers, and other health related groups.

The dissemination of public health information is accomplished through the MMWR series of publications. The publications consist of the MMWR, the CDC Surveillance Summaries, the Recommendations and Reports, and the Annual Summary of Notifiable Diseases. The estimated annualized burden is 4,654 hours.

Type of respondents	Number of respondents	Frequency of response	Average time of response
State and Local Health Departments	179	52	30/60

Dated: April 10, 2002.

Nancy E. Cheal,

Acting Associate Director for Policy, Planning and Evaluation, Centers for Disease Control and Prevention.

[FR Doc. 02–9385 Filed 4–16–02; 8:45 am]

BILLING CODE 4163–18–P

DEPARTMENT OF HEALTH AND HUMAN SERVICES

Centers for Disease Control and Prevention

Advisory Committee on Immunization Practices: Notice of Charter Renewal

This gives notice under the Federal Advisory Committee Act (Pub. L. 92–463) of October 6, 1972, that the Advisory Committee on Immunization Practices (ACIP), Centers for Disease Control and Prevention (CDC), Department of Health and Human Services, has been renewed for a 2-year period beginning April 1, 2002, through April 1, 2004.

For further information, contact Dixie E. Snider, Jr., M.D., Executive Secretary, ACIP, CDC, 1600 Clifton Road, NE, (M/S D–50), telephone 404/639–7240 or fax 404/639–7341.

The Director, Management Analysis and Services Office, has been delegated the authority to sign **Federal Register** notices pertaining to announcements of meetings and other committee management activities for both CDC and ATSDR.

Dated: April 11, 2002.

Alvin Hall,

Acting Director, Management Analysis and Services Office, Centers for Disease Control and Prevention.

[FR Doc. 02–9265 Filed 4–16–02; 8:45 am]

BILLING CODE 4861–18–P

DEPARTMENT OF HEALTH AND HUMAN SERVICES

Centers for Disease Control and Prevention

Advisory Committee on Immunization Practices, Smallpox Working Group: Meeting

In accordance with section 10(a)(2) of the Federal Advisory

Committee Act (Pub. L. 92–463), the Centers for Disease Control and Prevention (CDC) announces the following committee meeting:

Name: Advisory Committee on Immunization Practices, Smallpox Working Group.

Times and Dates: 1 p.m.–9 p.m., May 8, 2002; 8:30 a.m.–11:30 a.m., May 9, 2002.

Place: Atlanta Marriott Century Center, 2000 Century Boulevard, NE., Atlanta, Georgia 30345–3377.

Status: Open to the public, limited only by the space available.

Purpose: The working group will gather information, analyze research and formulate options to be presented to the Advisory Committee on Immunization Practices in order to make recommendations for the use of vaccinia (smallpox) vaccine.

Matters to be Discussed: The panel will review recommendations regarding the use of vaccinia (smallpox) vaccine.

Contact Person for More Information: Gloria A. Kovach, Program Analyst, Epidemiology and Surveillance Division, National Immunization Program, CDC, 1600 Clifton Road, NE, M/S E61, Atlanta, Georgia 30333. Telephone 404/639–8096.

The Director, Management Analysis and Services Office, has been delegated the authority to sign **Federal Register** notices pertaining to announcements of meetings and other committee management activities for both the Centers for Disease Control and Prevention and the Agency for Toxic Substances and Disease Registry.

Dated: April 8, 2002.

Alvin Hall,

Acting Director, Management Analysis and Services Office, Centers for Disease Control and Prevention.

[FR Doc. 02–9246 Filed 4–16–02; 8:45 am]

BILLING CODE 4163–18–P

DEPARTMENT OF HEALTH AND HUMAN SERVICES

Centers for Disease Control and Prevention

Mine Safety and Health Research Advisory Committee: Meeting

In accordance with section 10(a)(2) of the Federal Advisory Committee Act (Pub. L. 92–463), the Centers for Disease Control and Prevention (CDC) announces the following conference call committee meeting.

Name: Mine Safety and Health Research Advisory Committee (MSHRAC).

Time and Date: 11 a.m.–2 p.m., May 22, 2002.

Place: Teleconference call will originate at the National Institute for Occupational Safety and Health, CDC, Atlanta, Georgia. Please see ''Supplementary Information'' for details on accessing the teleconference.

Status: Open to the public, teleconference access limited only by ports available.

Purpose: This committee is charged with providing advice to the Secretary, Health and Human Services; the Director, CDC; and the Director, NIOSH, on priorities in mine safety and health research, including grants and contracts for such research, 30 U.S.C. 812(b)(2), Section 102(b)(2).

Matters to be Discussed: Agenda for this meeting will focus on NIOSH mining research update, and metal and non-metal mining stakeholders proposal and discussion.

Agenda items are subject to change as priorities dictate.

SUPPLEMENTARY INFORMATION: This conference call is scheduled for 11 a.m. Eastern Time. To access the teleconference, you must dial 1–800–713–1971. To be automatically connected to the call, you will need to provide the operator with the conference code ''727816.''

CONTACT PERSON FOR MORE INFORMATION: Dr. Lewis Wade, Executive Secretary, MSHRAC, NIOSH, CDC, HHH Building, Room 715H, M/S P12, Washington, DC 20201–0004, telephone 202–401–2192.

The Director, Management Analysis and Services Office, has been delegated the authority to sign **Federal Register** notices pertaining to announcements of meetings and other committee management activities for both the Centers for Disease Control and Prevention and the Agency for Toxic Substances and Disease Registry.

Dated: April 8, 2002.

Alvin Hall,

Acting Director, Management Analysis and Services Office, Centers for Disease Control and Prevention.

[FR Doc. 02–9245 Filed 4–16–02; 8:45 am]

BILLING CODE 4163–19–P

DEPARTMENT OF HEALTH AND HUMAN SERVICES

Centers for Disease Control and Prevention

Board of Scientific Counselors, National Center for Infectious Diseases: Meeting

In accordance with section 10(a)(2) of the Federal Advisory Committee Act (Pub. L. 92–463), the Centers for Disease Control and Prevention (CDC) announces the following committee meeting.

Name: Board of Scientific Counselors, National Center for Infectious Diseases (NCID).

Times and Dates: 9:00 a.m.–5:00 p.m., May 2, 2002. 8:30 a.m.–3:00 p.m., May 3, 2002.

Place: CDC, Auditorium B, Building 1, Clifton Road, Atlanta, Georgia 30333.

Status: Open to the public, limited only by the space available.

Purpose: The Board of Scientific Counselors, NCID, provides advice and guidance to the Secretary, the Assistant Secretary for Health, the Director, CDC, and Director, NCID, in the following areas: program goals and objectives; strategies; program organization and resources for infectious disease prevention and control; and program priorities.

Matters to be Discussed: Agenda items will include:

1. Opening Session: NCID Update
a. Institute of Medicine
b. Facilities
c. Budget
2. Program Updates:
a. West Nile
b. Waterborne Disease
c. Malaria
d. CDC Global Infectious Diseases Strategy
3. Bioterrorism Updates and Discussion
a. Organizational Approach/Structure
b. Anthrax Investigations
c. Smallpox Activities
4. Other issues, e.g., antimicrobial resistance/ widespread use of antibiotics
5. Board meets with Director, CDC
6. Discussions and Recommendations

Other agenda items include announcements/introductions; follow-up on actions recommended by the Board at the previous meeting; and consideration of future directions, goals and recommendations.

Agenda items are subject to change as priorities dictate.

Written comments are welcome and should be received by the contact person listed below prior to the opening of the meeting.

CONTACT PERSON FOR MORE INFORMATION: Diane S. Holley, Office of the Director, NCID, CDC, Mailstop C–19, 1600 Clifton Road, NE, Atlanta, Georgia 30333, e-mail *dsy1@cdc.gov;* telephone 404/639–0078.

The Director, Management Analysis and Services Office, has been delegated the authority to sign **Federal Register** notices pertaining to announcements of

meetings and other committee management activities, for both the Centers for Disease Control and Prevention and the Agency for Toxic Substances and Disease Registry.

Dated: April 12, 2002.

Alvin Hall,

Acting Director, Management Analysis and Services Office, Centers for Disease Control and Prevention.

[FR Doc. 02–9464 Filed 4–16–02; 8:45 am]

BILLING CODE 4163–18–P

DEPARTMENT OF HEALTH AND HUMAN SERVICES

Centers for Disease Control and Prevention

Citizens Advisory Committee on Public Health Service Activities and Research at Department of Energy (DOE) Sites: Idaho National Engineering and Environmental Laboratory Health Effects Subcommittee (INEELHES)

In accordance with section 10(a)(2) of the Federal Advisory Committee Act (Pub. L. 92–463), the Agency for Toxic Substances and Disease Registry (ATSDR) and the Centers for Disease Control and Prevention (CDC) announce the following meeting.

Name: Citizens Advisory Committee on Public Health Service Activities and Research at Department of Energy (DOE) Sites: Idaho National Engineering and Environmental Laboratory Health Effects Subcommittee (INEELHES).

Times and Dates: 8:30 a.m.–4:30 p.m., May 1, 2002; 8:30 a.m.–2:15 p.m., May 2, 2002.

Place: WestCoast Idaho Falls Hotel, 475 River Parkway, Idaho Falls, Idaho 83402, telephone (208) 523–8000, fax (208) 529–9610.

Status: Open to the public, limited only by the space available. The meeting room accommodates approximately 50 people.

Background: Under a Memorandum of Understanding (MOU) signed in December 1990 with DOE, and replaced by MOUs signed in 1996 and 2000, the Department of Health and Human Services (HHS) was given the responsibility and resources for conducting analytic epidemiologic investigations of residents of communities in the vicinity of DOE facilities, workers at DOE facilities, and other persons potentially exposed to radiation or to potential hazards from non-nuclear energy production use. HHS delegated program responsibility to CDC.

In addition, a memo was signed in October 1990 and renewed in November 1992, 1996, and in 2000, between ATSDR and DOE. The MOU delineates the responsibilities and procedures for ATSDR's public health activities at DOE sites required under sections 104, 105, 107, and 120 of the Comprehensive Environmental Response, Compensation, and Liability Act (CERCLA or ''Superfund''). These activities include health consultations and public health assessments at DOE sites listed on, or proposed for, the Superfund National Priorities List and at sites that are the subject of petitions from the public; and other health-related activities such as epidemiologic studies, health surveillance, exposure and disease registries, health education, substance-specific applied research, emergency response, and preparation of toxicological profiles.

Purpose: This subcommittee is charged with providing consensus advice and recommendations to the Director, CDC, and the Administrator ATSDR, regarding community concerns pertaining to CDC's and ATSDR's public health activities and research at this DOE site.

Matters to be Discussed: Agenda items include updates from the National Center for Environmental Health (NCEH); Presentation by ATSDR on the INEEL Public Health Assessment; Comments from the DuBois, Idaho, Public Availability Session; Status Report on Snake River Aquifer; Status Report on INEEL Monitoring; and Status of INEEL Cleanup Project. Agenda items are subject to change as priorities dictate.

CONTACT PERSON FOR MORE INFORMATION: Natasha Friday, Executive Secretary, INEELHES, Radiation Studies Branch, Division of Environmental Hazards and Health Effects, NCEH, CDC, 1600 Clifton Road, NE, (E–39), Atlanta, GA 30333, telephone (404) 498–1800, fax (404) 498–1811.

The Director, Management Analysis and Services Office, has been delegated the authority to sign **Federal Register** notices pertaining to announcements of meetings and other committee management activities for both CDC and ATSDR.

Dated: April 11, 2002.

Alvin Hall,

Acting Director, Management Analysis and Services Office, Centers for Disease Control and Prevention.

[FR Doc. 02–9264 Filed 4–16–02; 8:45 am]

BILLING CODE 4163–18–P

DEPARTMENT OF HEALTH AND HUMAN SERVICES

Centers for Disease Control and Prevention

Statement of Organization, Functions and Delegations of Authority

Part C (Centers for Disease Control and Prevention) of the Statement of Organization, Functions, and Delegations of Authority of the Department of Health and Human Services (45 FR 67772–76, dated October 14, 1980, and corrected at 45 FR 69296, October 20, 1980, as amended most recently at 66 FR 39178–39179, dated July 27, 2001) is amended to reorganize the Office of Management, NCHS.

Section C–B, Organization and Functions, is hereby amended as follows:

Delete in its entirety the functional statement for the *Office of Management* (*HCS12*) and insert the following:

Office of Management and Operations (HCS12). (1) Participates in the development of policy, long-range plans, and programs of the National Center for Health Statistics (NCHS); (2) plans, coordinates, directs, and conducts the management and administrative operations of the NCHS; (3) review and effectiveness and efficiency of the operation and administration of all programs of the Center; (4) conducts management and organizational analyses as well as provides consultation and advice on program reorganizations; (5) manages the NCHS performance appraisal systems; (6) develops and manages training, organizational and career development and incentive award programs; (7) develops and directs systems for personnel, procurement, information management, staff resources utilization, workforce planning and management by objectives; (8) plans, develops, and conducts Center-wide management information and executive information systems; (9) develops administrative policies and procedures; (10) develops and implements NCHS policies and procedures in the areas of information systems security; (11) conducts information system security audits to insure that all NCHS program adhere to and are in compliance with establish procedures and policies; (12) provides management services in the areas of delegations of authority, directives management, grants management, procurement management, and reports and records management; (13) serves as the NCHS contact on all matters associated with labor-management partnership activities; (14) administers the NCHS IRB activity; (15) provides facilities management and office services management for NCHS; (16) develops and directs a safety and health program for the Center; and (17) provides conference management services for NCHS.

Administrative Operations Activity (HCS122). (1) Plans, directs and coordinates facilities and office services management activities for the NCHS; (2) assures compliance with federal, state, and local government environmental, safety, and health regulations; (3) serves as liaison for building management activities with CDC, GSA, and other federal, state, and local government officials; (4) develops plans for expanded, modified, or renovated facilities; (5) provides project

administration for contractual services; (6) provides physical security, parking, and conference management; (7) directs central administrative services including mail, supplies and copying management, shipping and receiving, property management, and messenger services for NCHS; (8) manages the Center's records, reports, and forms programs; (9) administers the NCHS grants activities; (10) provides guidance and staff support for major Center conferences and meetings; and (11) manages and administers the NCHS telecommunications systems.

Management Systems and Analysis Activity (HCS127). (1) Coordinates management information systems and analyses of data for improved utilization of Center resources; (2) directs systems analysis and design, programming, and systems training as it relates to implementation of new and existing administrative, management, and executive information systems; (3) recommends changes to improve information resources management efficiency and effectiveness; (4) develops, recommends, and provides advice on management policies, methods, directives, and procedures; (5) provides analysis, recommendations, and guidance related to the establishment or modification of organizational structure and functions; (6) conducts management analyses and surveys of NCHS programs and operations; (7) coordinates program and administrative delegations of authority; (8) conducts and coordinates NCHS-wide management improvement programs, including staff utilization, and productivity improvement; (9) negotiates solutions to intra- and inter-agency problems and issues in such areas as organization, functions, delegations, management regulations, and procedures; (10) serves as liaison to CDC and DHHS on programs to improve management and administration; (11) directs and coordinates the internal controls program within the Center; and (12) coordinates NCHS A–76 activities.

Delete in its entirety the functional statement for the *Office of Data Standards, Program Development, and Extramural Programs (HCS12)* and insert the following:

Office of Data Standards, Program Development, and Extramural Programs (HCS 16). (1) Participates in the development of policy, long-range plans, and programs of the Center; (2) develops proposed policies for the coordination of NCHS programs with external agencies, both public and private; (3) provides leadership, and serves as a focal point, for NCHS outreach efforts to organizations in the public and private sectors; serves as a focal point for developing collaborative statistical activities of NCHS with other organizations and agencies, and the development of public/private partnerships in health statistics; facilitates communication with outside agencies regarding program and policy issues; (4) provides a focus for program development and review of policy implications as related to emerging priority data needs of the country; coordinates the assessment of needs and the perspectives of other agencies; participates actively in program planning and policy development by reviewing the relevance of current and proposed programs to defined priorities of need and the requirements of other agencies and principal user groups; (5) evaluates or arranges for the evaluation of the adequacy, completeness, and responsiveness of Center programs both nationally and internationally to the NCHS mission and national priorities; (6) based on the results of evaluations, makes proposals for changes in NCHS programs or policies and collaborative enterprises; (7) assures leadership in the definition, development, and coordination of cooperative and collaborative programs in health statistics, working with state and local governments, and other organizations including the private and academic sectors in the development and strengthening of shared subnational statistical systems or services to the needs of the country; (8) conducts research, analyses, and demonstrations related to subnational systems; (9) provides scientific and technical support and Executive Secretariat services to the National Committee on Vital and Health Statistics (NCVHS), the legislatively-mandated advisory committee to the Secretary, DHHS; (10) provides for programmatic review and leadership for the NCHS Reimbursable Work Program; (11) provides advice and assistance to outside agencies and organizations in the conduct of statistical training activities; conducts training in key areas, as appropriate; and promotes appropriate training and educational materials for implementation and use of data sets and classification systems and for other purposes; (12) provides leadership and serves as advisor to the Director on policy issues related to data standards and classification systems; (13) provides scientific and technical advice to the DHHS Data Council on data standards and classification issues, and takes a leadership role in HHS-wide workgroups addressing such issues; (14) serves as NCHS's focal point to other organizations regarding efforts to develop minimum data sets, core data sets, data definitions, common approaches to medical and statistical terminology, and other standards-related efforts; (15) participates with appropriate agencies and organizations to promote the dissemination, adoption, and use of standards advocated by NCHS, DHHS, and the NCVHS; serves as a nucleus for data policy, data standards, and medical classification by fostering the collaborative development of tools and guidelines to enhance the integrity, comparability, quality, and usefulness of the data products from a wide variety of public and private agencies at the national and subnational levels; (16) assures and provides interface of data confidentiality, linkage, and security issues with other data policies and standards; (17) serves as the focal point and coordinator of U.S. Government activities related to the International Classification of Diseases (ICD) and maintains liaison with the World Health Organization through the direction of the WHO Collaborating Center for Classification of Diseases for North America working with appropriate programs throughout NCHS; and (18) provides a focus for enhancing collaborative activities in advancing the science and practice of health statistics, stimulating working arrangement with Universities, Schools of Public Health, Schools of Medicine and professional organizations of same; provides a focus for the development of a reliance upon NCHS data for research in these settings and provides leadership for graduate student training and interaction with NCHS.

Data Policy and Standards Staff (HCS162). (1) Provides a focus within NCHS for the development and continuing responsive modification of a conceptual framework for a broad-based definition of the basic health information systems of the country; (2) serves as a nucleus for data policy, data standards, and medical classification by fostering the collaborative development of tools and guidelines to enhance the integrity, comparability, quality, and usefulness of the data products from a wide variety of public and private agencies at the national and subnational levels; (3) establishes and maintains liaison and partnerships with Federal agencies within and outside DHHS and with a wide variety of private and professional organizations to promote uniformity in classifications, data sets, definitions, and related data policies and standards; (4) assures representation of NCHS and takes a leadership role on intra- and inter-

agency task forces and committees reviewing and developing uniform data elements and data sets for diverse health care settings, nomenclatures and classifications; (5) serves as a focal point within NCHS for collaborative activities related to computer-based patient record development; (6) supports the Director, NCHS, as a member of the DHHS Data Council and coordinates NCHS staff support to the Data Council for data policy and standards activities; (7) serves as a focal point for programmatic and subject matter support of the NCVHS; (8) establishes and maintains liaison between NCVHS and agencies within DHHS, other governmental agencies, and relevant private and professional organizations; (9) directs and facilitates cross-cutting national data policy activities that involve multiple outside organizations and have important implications for NCHS and CDC programs; (10) provides liaison with standard-setting organizations on emerging data needs and on medical and health classification issues; (11) is responsible for overseeing, coordinating, evaluating, and formulating recommendations for the ICD Family of Classifications and related classifications, by providing the focus within NCHS for the development and execution of classification activities; (12) serves as the focal point and coordinator of U.S. Government activities related to the ICD and maintains liaison with the World Health Organization (WHO) through direction of the WHO Collaborating Center for the Classification of Diseases for North America; (13) provides advice and assistance within NCHS and to other agencies and organizations in the conduct of training activities related to data policies and standards; conducts training in key areas as appropriate; and promotes appropriate training and educational materials for implementation and use of data sets and classification systems; (14) assures comparability of morbidity classification, using current and subsequent versions of the ICD for morbidity, and recommends revisions to the ICD for morbidity applications as appropriate; (15) assumes full responsibility for the development and implementation of the evaluation program of NCHS for assessment of the adequacy, completeness, and responsiveness of Center programs both nationally and internationally to the NCHS mission and user needs for data; based on evaluations, makes proposals for changes in NCHS programs or policies; (16) assures and provides interface of data confidentiality, linkage, and security issues with other data policies and standards; and (17) participates with appropriate agencies and organizations to promote the dissemination, adoption, and use of data policies and standards advocated by NCHS, DHHS, and the NCVHS; develops comprehensive policy analyses and special reports, and newsletters.

Program Development Staff (HCS163). (1) Develops, pilots, and promotes programs, projects, and special activities to improve and quality, comparability, timeliness, and particularly, the relevance of data with emphasis on those aspects of data collection, analysis, interpretation, and dissemination that require collaboratively-supported systems involving public and private agencies, all levels of government and the international statistical community; (2) develops and conducts specialized workshops and conferences to build focused research capacities and foster networks of extramural researchers; (3) promotes public/private extramural funding opportunities through identifying common needs and developing innovative research strategies; (4) develops innovative training programs, materials, and substantive guidelines for use incollaboratively-sponsored and coordinated health statistics activities; (5) responds to unique requests for improved approaches or assistance in the planning and conduct of complex statistical enterprises, particularly those involving major policy issues, multiple agencies or levels of government, and operating at the intersect of public health practice and epidemiologic or statistical operations and research; (6) conducts other activities and participates in special projects selected to provide NCHS an opportunity for gaining definitive knowledge regarding major priority needs for data and major barriers to success in collaboratively-sponsored statistical enterprises, with emphasis on projects requiring data for subnational geographic areas and special populations and for multiple levels of government; (7) serves as the focal point for coordination of health statistical activities within NCHS as they relate to data needs and applications by other organizations or agencies; (8) provides program leadership for the NCHS Reimbursable Work Program including the private sector initiatives; (9) provides liaison with other federal departments and encourages interagency collaboration through the conduct of formal interagency meetings, seminars, workshops, and conferences which are designed to promote coordination of NCHS data systems with other federal, national, and international health systems; (10) participates in the dissemination, evaluation, and use of standard health data sets; (11) directs research and development related to data systems for community health profiles and other small area applications; (12) participates in the NCHS longitudinal studies program development and implementation; (13) designs and implements special studies related to other assigned functions; and (14) prepares committee charters and proposals for the establishment or termination of committees and subcommittees, prepares nominations for submission to the Secretary, DHHS,

Dated: April 4, 2002.

David W. Fleming,

Acting Director, CDC.

[FR Doc. 02–9247 Filed 4–16–02; 8:45 am]

BILLING CODE 4160–18–M

DEPARTMENT OF HEALTH AND HUMAN SERVICES

Centers for Disease Control and Prevention

Statement of Organization, Functions, and Delegations of Authority

Part C (Centers for Disease Control and Prevention) of the Statement of Organization, Functions, and Delegations of Authority of the Department of Health and Human Services (45 FR 67772–76, dated October 14, 1980, and corrected at 45 FR 69296, October 20, 1980, as amended most recently at 66 FR 39178–39179, dated July 27, 2001) is amended to reorganize the National Center for Infectious Diseases.

Section C–B, Organization and Functions, is hereby amended as follows:

Delete the functional statement for the *National Center for Infectious Diseases (HCR)* and insert the following:

Plans, directs, and coordinates a national program to improve the identification, investigations, diagnosis, prevention, and control of infectious diseases. In carrying out the mission, the Center: (1) Provides leadership in investigation and diagnosis of infectious diseases of public health significance: (2) maintains surveillance of infectious diseases, disability, and death; (3) conducts applied and operational research related to definition, distribution, diagnosis, prevention, and control of infectious diseases, including vaccine development; (4) administers a

biological reagents program which includes research on production, development of guidelines for production and utilization, and standardization, production, and distribution of reference reagents; (5) produces, evaluates and distributes experimental vaccines, antisera and antitoxins, skin test antigens, and immune serum globulins to control and prevent laboratory infections and to prevent or minimize illness in certain production groups; (6) produces and distributes microbiological reference and working reagents not commercially available or of unreliable supply; (7) conducts applied research related to vectors of disease; (8) provides epidemic assistance; (9) maintains competence in the detection, identification, and control of rare, exotic, or tropical diseases; (10) provides reference diagnostic services; (11) provides technical assistance to states and localities and to other nations in the investigation, diagnosis prevention, and control of infectious diseases; (12) provides scientific services in support of CDC's laboratories; (13) provides epidemic aid to foreign nations and assists other nations in establishing and implementing infectious disease control program; and (14) collaborates, as appropriate, with other Centers and Offices of the CDC in carrying out the above functions.

Delete in its entirety the title and functional statement for the *Division of Viral and Rickettsial Diseases (HCRY)* and insert the following:

Division of Viral and Rickettsial Diseases (HCRU). (1) Conducts surveillance, investigations, and studies of viral and rickettsial diseases to define their etiology and epidemiology and to develop effective methods for prevention, diagnosis, treatment, and control; and (2) conducts or participates in clinical, field, and laboratory research to develop, evaluate, and improve laboratory methods, materials, and therapeutic practices used for prevention, diagnosis, treatment, and control of viral, rickettsial, and prison diseases; (3) conducts research on virus transmission to develop effective prevention and control strategies and on vaccine effectiveness to assess prevention potential; (4) conducts laboratory, clinical, and epidemiologic studies of highly hazardous disease agents that require biosafety level 3 or biosafety level 4 security for their safe handling; (5) conducts ecological studies to develop and evaluate disease prevention and control measures; (6) provides epidemic aid, epidemiologic consultation, reference and diagnostic services, and technical assistance to state and local health departments, other federal agencies, and national and international health organizations; (7) provides scientific and technical assistance to other National Center for Infectious Diseases (NCID) and Centers for Disease Control and Prevention (CDC) components when the work requires unique expertise or specialized equipment not available in other components; (8) provides routine and specialized laboratory training in the diagnosis, isolation, and characterization of viral and rickettsial agents to personnel from state and local health departments and other national and international organizations; (9) provides training opportunities for Epidemic Intelligence Service officers and others in CDC sponsored programs, including postgraduate students, postdoctoral fellows, and other public health and laboratory scientists; (10) provides expert pathological support for various infectious diseases to state and local health departments, other NCID components, and national and international organizations; and (11) serves as appropriately designated national and World Health Organization collaborating centers for viral and rickettsial diseases.

Office of Director (HCRU1). (1) Directs and administers the programs and activities of the Division of Viral and Rickettsial Diseases (DVRD); (2) provides leadership and counsel on policy development and interpretation, budget formulation, and program planning, development, management, operations, and evaluation; (3) provides DVRD-wide administrative and programmatic services and coordinates or ensures coordination with the appropriate NCID or CDC staff offices; (4) provides liaison with other governmental agencies, international organizations, and other groups; (5) coordinates, in collaboration with the appropriate NCID and CDC components, international health activities related to the prevention and control of viral, rickettsial, and prion diseases; (6) coordinates, in collaboration with the appropriate CDC, PHS, and non-government components, CDC's activities to monitor and improve the safety of blood and blood products in the United States and international settings, including development and enhancement of surveillance systems, conduct of epidemic investigations and risk assessment studies, and development and evaluation of prevention strategies; (7) serves as a liaison between CDC and other PHS agencies, the Department of Health and Human Services, non-governmental organizations, and professional groups on blood safety issues through active participation in federal advisory committees and technical committees; (8) conducts surveillance and epidemiologic investigations to facilitate the understanding and control of prion diseases, Reye syndrome, and Kawasaki syndrome; (9) serves as the primary disseminator of information from CDC, including clinical and disease prevention consultations to state and local health departments and/or federal and international agencies on the illnesses and syndromes caused by or related to viruses, rickettsiae, and prions; (10) augments the statistical and epidemiologic resources for the branches within the Division through provision of consultations and support for specific projects or investigations and helps develop, support, and coordinate statistical activities at the division level; (11) provides scientific and editorial review and clearance of manuscripts for publication, abstracts for presentation, protocols for Institutional Review Board (IRB) and human subjects review, and other scientific, programmatic, and informational materials; and (12) coordinates the implementation of a comprehensive public health communication program for the prevention and control of diseases caused by viruses, rickettsiae, and prions.

Information Technology Activity (HCRU12). (1) Designs, implements, and maintains network systems for internal and external user connectivity for accessing, transferring, and storing data; (2) provides user support for desktop operating systems and software; (3) continuously consults with user community to ascertain information technology needs and to develop strategic and action plans; (4) provides technical expertise in the design, development, and support of database management systems; (5) in collaboration with other branches and activities, develops systems to facilitate the acquisition of surveillance data electronically; (6) represents the division on NCID and CDC workgroups and councils and in other IRM related activities; (7) provides graphic support for presentation and desktop publishing; (8) provides intranet services, technical expertise, and support for the development and implementation of web services; (9) provides technical and cost related consultation to DVRD's Office of the Director and Branches; (10) provides assistance to the end-user community for understanding new technology through information

dissemination, coordination, and establishment of training; and (11) provides assurance that IRM regulations, policies, procedures, and standards are incorporated into the Division's information technology plans and activities.

Infectious Disease Pathology Activity (HCRU13). (1) Serves as a scientific and technical resource to NCID by providing expertise in histopathology, molecular pathology, and ultrastructural analysis for detecting infectious disease agents and studying the interactions between microbial agents and host cells; (2) develops, improves, evaluates, and applies special immunohistologic, ultrastructural, and/or nucleic acid probe technologies for detecting microbial agents and/or expressed gene products in tissue specimens or tissue culture; (3) conducts basic and applied research into the pathogenesis of infectious diseases; (4) provides intramural and extramural technical and professional expertise for assistance in training in infectious disease pathology and molecular approaches to the identification of specific nucleic acid sequences and special antigens in tissue specimens; (5) provides for tracking, distribution, and testing of reference/diagnostic pathology specimens submitted through the data and special handling system; (6) provides histopathology, molecular pathology, and ultrastructure reference/diagnostic support and epidemic aid to state and local health departments, other federal agencies, and national and international health organizations; and (7) serves as the WHO Collaborating Center for Reference Pathology of Hemorrhagic Fevers and other Infectious Diseases.

Influenza Branch (HCRU2). Provides leadership and technical expertise for national and international programs aimed at improving the prevention and control of both epidemic and pandemic influenza. In carrying out this mission, the Influenza Branch: (1) Conducts global and national surveillance to identify novel variants with the potential to cause influenza epidemics and pandemics and monitors associated disease activity; (2) conducts investigations of important or unusual international and domestic influenza outbreaks; (3) conducts epidemiological and laboratory investigations to increase knowledge about influenza and to improve its prevention and control; (4) provides information and recommendations on the use of vaccines, antiviral agents, and other modalities to prevent, control, and treat influenza; (5) serves as the WHO Collaborating Center for Reference and Research on Influenza; (6) provides influenza reagents to World Health Organization Collaborating Laboratories worldwide and maintains a reference collection of human, swine, and avian influenza viruses and antisera; (7) performs reference antigenic analysis, molecular biologic analysis of influenza virus isolates, and post-vaccination human serologic studies for vaccine strain selection; (8) conducts studies into the evolution, structure, replication, immunology, and pathogenesis of influenza viruses; (9) evaluates influenza vaccine and antiviral agents developed elsewhere; (10) develops and evaluates novel, improved influenza vaccines and vaccines that might be used in the case of an influenza pandemic; (11) develops, evaluates, and improves new techniques and reagents for the diagnosis of influenza in humans as well as the rapid identification of avian and swine influenza viruses that may cause human infections; (12) supports applied research directed toward improved influenza prevention and control; (13) provides support for national epidemiologic and laboratory capacity building; (14) initiates and conducts national and international laboratory and epidemiologic training courses; and (15) provides technical expertise and leadership for national and international pandemic planning activities.

Epidemiology Section (HCRU23). (1) Conducts national surveillance and assists with global surveillance to monitor influenza viruses and their impact on populations; (2) conducts investigations of unusual or important influenza outbreaks; (3) conducts research on the control, prevention, surveillance, and epidemiology of influenza; (4) develops, implements, and evaluates strategies and recommendations, including those related to use of vaccines, drugs, and other measures, for the control and prevention of influenza; (5) provides expert consultation and information on the control, prevention, diagnosis, and treatment of influenza; and (6) provides instruction on the epidemiology and surveillance of influenza.

Molecular Genetics Section (HCRU22). (1) Applies molecular biological and genetic techniques to analyze the evolution of human influenza viruses; (2) performs molecular analysis of novel influenza viruses isolated from humans that are submitted to the WHO Collaborating Center for Reference and Research on Influenza; (3) develops vaccines against novel influenza viruses using genetic and recombinant DNA techniques; (4) conducts studies on live attenuated influenza vaccines to determine the molecular correlates of attenuation and their genetic stability; (5) uses molecular biological techniques to determine the genetic basis for specific phenotypes of influenza viruses such as altered host-range, virulence, and antiviral resistance; (6) develops molecular biological methods for the rapid identification of reassortant viruses bearing genes derived from human and avian or swine influenza viruses; and (7) provides molecular biological support for the development of diagnostic tools or tests for influenza.

Immunology and Viral Pathogenesis Section (HCRU24). (1) Evaluates the humoral and cellular immune responses to influenza infection, to conventional vaccines, and to experimental vaccines in humans and in animal models; (2) develops new technologies to monitor host immune responses to human and avian influenza viruses and vaccines; (3) investigates the immunobiology of aging as it relates to immunity to influenza; (4) develops and evaluates strategies of vaccination against pandemic influenza; (5) conducts serological investigations supporting epidemic investigations or field studies related to avian influenza viruses; and (6) investigates the basis of human and avian influenza virus pathogenicity in mammalian species.

Strain Surveillance Section (HCRU25). (1) Identifies and characterizes influenza viruses using serologic and molecular techniques; (2) monitors appearance and spread in humans of influenza variants with epidemic or pandemic potential; (3) provides laboratory support for epidemic investigations or field studies; (4) maintains a reference collection of human and animal influenza viruses and the corresponding antisera; (5) prepares and distributes reagent kits for influenza virus identification to WHO National Influenza Centers worldwide as needed for the identification of viruses that pose a threat to human health; (6) develops and evaluates new reagents and methods to diagnose influenza more rapidly, efficiently, or sensitively; (7) coordinates international surveillance on the occurrence of antiviral resistance among circulating human influenza viruses; (8) collates and disseminates international epidemiological and virological information on influenza; (9) provides laboratory training to personnel from state and local health departments, WHO's National Influenza Centers abroad, and other organizations on laboratory techniques for the isolation, identification, characterization, and molecular analysis of influenza viruses; (10) conducts studies on the immune

response to influenza variants; (11) conducts phylogenetic and evolutionary studies of human or animal influenza viruses of special interest; and (12) conducts special studies designed to assess the efficacy of administering non-standard doses of conventional vaccines and to examine the basis for attenuation of live attenuated influenza vaccines.

Respiratory and Enteric Viruses Branch (HCRU6). (1) Provides reference/diagnostic services and conducts epidemiological studies and multinational surveillance for respiratory and enteric diseases; (2) monitors respiratory and enteric virus diseases through the National Respiratory and Enteric Virus Surveillance System, the National Enterovirus Surveillance System, and the Global Surveillance Program for Wild Polioviruses; (3) conducts clinical and epidemiologic studies and investigates outbreaks related to respiratory and enteric virus diseases; (4) conducts studies of the biology, biochemical and antigenic characteristics, and immunology and pathogenesis of respiratory and enteric viruses and associated disease; (5) develops, analyzes, and improves diagnostic methods and reagents for respiratory and enteric viruses, (6) develops and evaluates vaccines and vaccination programs for measles virus, rotavirus, and non-influenza respiratory viruses; (7) provides support for global eradication of measles virus and poliomyelitis; and (8) serves as the WHO Collaborating Center for Virus Reference and Research for Respiratory Virus Diseases Other Than Influenza, the WHO Collaborating Center for Virus Reference and Research (Enteroviruses), the WHO Collaborating Center for Polio, the WHO Collaborating Center for Rotavirus Investigators, and the WHO Collaborating Center for Measles.

Enterovirus Section (HCRU62). (1) Conducts epidemiologic, laboratory, biologic, and molecular studies of enterovirus infections and develops strategies to prevent the associated diseases; (2) provides reference/diagnostic support for typing enterovirus isolates; (3) develops and evaluates new diagnostic methods for the diagnosis of enteroviral infections; (4) supports surveillance studies of enterovirus infections; (5) initiates and supports epidemiologic and outbreak investigations of enterovirus infections and associated diseases; and (6) provides laboratory training in enterovirus diagnostics for persons from state and local health departments and other nations.

Molecular Virology Section (HCRU64). (1) Plans, directs, and conducts laboratory studies and programs to support the global poliovirus eradication program; (2) develops and applies new molecular techniques for understanding the clinical, epidemiologic, and biologic characteristics of poliovirus and non-poliovirus enteroviruses; (3) conducts laboratory studies of poliovirus that include developing techniques and reagents to monitor the distribution and spread of wild polioviruses worldwide; (4) supports development of the global poliovirus eradication laboratory network; (5) provides laboratory support for investigations of outbreaks of poliomyelitis and studies of the efficacy of poliovirus vaccines; (6) conducts studies of the mechanisms of genetic change of polioviruses and reversion of oral attenuated poliovaccine virus to virulent wild-like viruses; and (7) serves as a WHO Collaborating Center for Polio.

Respiratory Virus Section (HCRU66). (1) Plans, directs, and coordinates national programs to control and prevent viral respiratory diseases (other than influenza virus) and parvovirus associated disease; (2) conducts epidemiologic, laboratory, and biologic studies of such non-influenza respiratory viruses as adenovirus, coronavirus, parainfluenza viruses, respiratory syncytial virus, and rhinovirus and parvoviruses; (3) provides reference/diagnostic support for identifying respiratory virus and parvovirus virus infections and isolates; (4) develops and evaluates new methods for diagnosing respiratory virus and parvovirus infections; (5) trains persons from state and local health departments and others from throughout the world on methods for diagnosing respiratory virus and parvovirus infections; (6) initiates and supports epidemic investigations of respiratory virus and parvovirus infections and associated diseases; (7) conducts epidemiologic, immunologic, and virologic studies to support development of RSV and parainfluenza virus vaccines; (8) provides laboratory support for studies of diseases of unknown etiology; and (9) serves as a WHO Reference Center for Respiratory Viruses Other than Influenza.

Viral Gastroenteritis Section (HCRU68). (1) Plans, directs, and coordinates the national program to prevent and control viral gastrointestinal diseases; (2) conducts epidemiologic, laboratory, biologic, and molecular studies of the viral agents of gastroenteritis, including rotaviruses, caliciviruses, astroviruses, Norwalk and Norwalk-related viruses, and enteric adenoviruses, including those transmitted by food and water, in order to design prevention strategies and improve the health of the public; (3) provides reference/diagnostic support for identifying agents of viral gastroenteritis; (4) develops and evaluates new methods for diagnosing viral gastroenteritis; (5) collaborates and supports studies on effectiveness of vaccine candidates; (6) trains persons from state and local health departments and others from throughout the world on methods for diagnosing viral gastroenteritis; (7) initiates and supports epidemic investigations of gastroenteritis; (8) provides laboratory support for studies of disease of unknown etiology; and (9) serves as a WHO Collaborating Center for Rotavirus Investigators.

Measles Virus Section (HCRU69). (1) Plans, directs, and coordinates laboratory-based surveillance, including serological and molecular surveillance, conducts applied research programs and supports domestic and regional efforts in the elimination of measles and rubella viruses, and supports global programs dedicated to the accelerated control and elimination of these agents; (2) develops and applies new molecular and immunological techniques for understanding the clinical, epidemiologic, and biologic characteristics of measles and related virus infections, including rubella and mumps; (3) uses existing and/or developments diagnostic and immunological assays to determine the immunological correlates of short- and long-term protective immunity that results from the administration of current measles vaccines and/or from wild type measles virus infections; (4) conducts studies of the extent and importance of antigenic and genetic differences among wild-type measles virus isolates and currently used vaccine virus strains; (5) collaborates in the development of live, subunit, and DNA vaccines and alternative delivery routes; (6) evaluates live and/or subunit vaccines in appropriate animal model systems; (7) provides laboratory support for outreach identification and control, for vaccine trials, and for other studies of mutual interest between NCID/NIP and state and territorial laboratories pertaining to measles, mumps, and rubella; (8) serves as WHO Collaborating Center for Measles and Rubella, WHO Global Specialized Measles Laboratory, and PAHO Regional Reference Laboratory for measles and rubella; and (9) provides laboratory training to personnel from state and local health departments and other national and international organizations on measles

and rubella virus diagnostic serology, virus isolation, and molecular epidemiology.

Special Pathologens Branch (HCRU7). (1) Provides epidemic aid and conducts epidemiologic studies on the detection, prevention, and control of highly hazardous viral diseases; (2) provides primary isolation, identification, and characterization of highly hazardous disease agents that require biosafety level 3 or biosafety level 4 laboratory conditions for their safe handling; (3) develops, evaluates, and improves methods for treatment, prevention, and laboratory diagnosis of hazardous disease agents; (4) conducts laboratory, clinical, and epidemiologic investigations on the pathogenesis, pathophysiology, and prevention of viral infections caused by highly hazardous viruses; (5) provides consultation on the clinical and epidemiologic management of suspected cases and/or epidemics of these diseases, including rapid development of a field laboratory; (6) consults with national and international scientists on the design, staffing, and efficient operation of a high hazard pathogen laboratory program; (7) serves as a WHO Collaborating Center for Virus Reference and Research for Viral Hemorrhagic Fevers; and (8) develops and evaluates health education programs for educating the general public and health professionals about infection, treatment, infection control in clinical settings, prevention, and laboratory diagnosis of highly hazardous viral diseases;

Disease Assessment and Control Section (HCRU74). (1) Provides assessment and integration of ecological, epidemiological, and laboratory aspects of infection, disease, and prevention of highly hazardous viruses; (2) provides primary isolation, identification, and characterization of highly hazardous disease agents that require biosafety level 3 or 4 laboratory standards for their safe handling; (3) develops, evaluates, and improves methods for treatment, prevention, and laboratory diagnosis of hazardous disease agents; (4) consults with national and international scientists on the design, staffing, and efficient operation of a high hazard pathogen laboratory program; and (5) serves as the main focus for activities of the Special Pathogens Branch as a WHO Collaborating Center.

Molecular Biology Section (HCRU75). (1) Conducts original studies using molecular biological techniques to better understand the biology of highly hazardous viruses; (2) uses most efficient methods for molecular characterization of newly identified viruses or strains, including PCR, cloning, and sequencing of virus genes and protein characterization; (3) applies current molecular biological methods in developing diagnostic and therapeutic reagents, products, and materials for assessment as candidate vaccines for highly hazardous viruses; (4) collaborates with other sections in applying new reagents and products to the understanding of the epidemiology, pathogenesis, immunology and prevention, and therapy of highly hazardous viruses; and (5) collaborates with visiting national and international scientists in characterizing exotic, highly hazardous viruses.

Pathogensis and Immunology Section (HCRU76). (1) Conducts original studies on the pathogenesis and immunology of highly hazardous virus diseases; (2) conducts studies on the safety of and protection by vaccines against highly hazardous viruses in animal models; (3) uses in vitro models to assess the role of drug and other biologic agents on the pathogenesis and therapy of highly hazardous agents; (4) obtains and characterizes virus isolates from patients suspected of being infected with highly hazardous viruses; and (5) collaborates with visiting scientists and foreign institutions on the study of highly hazardous viruses in laboratory and field projects.

Viral Exanthems and Herpes Virus Branch (HCRU8). (1) Conducts surveillance and laboratory-based epidemiologic studies of chronic fatigue syndrome (CFS); (2) serves as the WHO Collaborating Center for Smallpox and Other Poxvirus Infections and provides reference/diagnostic services for suspected smallpox and other poxvirus infections, with emphasis on bioterrorism; (3) serves as the Varicella Zoster Virus National Laboratory; (4) conducts laboratory-based epidemiologic studies of human papillomavirus (HPV) infection and diseases with emphasis on control/prevention of cervical cancer and recurrent respiratory papillomatosis; (5) conducts laboratory-based epidemiologic studies of herpesviruses, with emphasis on infections in immunocomprised hosts, congenital and perinatal infections, and disease; (6) conducts research concerning human immune responses to herpes, HPV, and poxviruses; (7) develops, evaluates, and improves methods and reagents for rapid diagnosis of viral infections; (8) provides epidemiology, molecular biology, diagnostic serology/virology, and immunology consultation and collaboration to national and international organizations concerning prevention and control of CFS, poxvirus, HPV, and herpesvirus diseases, virus-associated cancers, and vaccine programs; and (9) provides assistance regarding DNA virus infection and associations between viruses, host genetics, host immune response, and human disease as necessary.

Epidemiology Section (HCRU83). (1) Conducts surveillance and epidemiologic studies of CFS and diseases caused by HPV, herpesviruses, and poxviruses, with emphasis on prevention/control strategies; (2) supports epidemic investigations of poorly defined syndromic illness and diseases associated with poxviruses, HPV, and herpesviruses; (3) provides data processing, statistical consultation, and epidemiologic/statistical collaboration to all sections of VEHB; (4) develops and evaluates data processing and statistical methods applicable to laboratory assays and investigations conducted by VEHB; (5) collaborates with the National Cancer Institute, NIH concerning utilization of epidemiologic and genetic data in bioinformatics; and (6) provides data processing, statistical, and epidemiology consultation and training to personnel from CDC, state and local health departments, and other national and international organizations.

Human Papillomavirus Section (HCRU84). (1) Conducts laboratory-based epidemiologic studies related to the role of HPV infections in human cancers (e.g., cervical cancer); (2) conducts laboratory-based epidemiologic studies of recurrent respiratory papillomatosis; (3) conducts studies of gene expression of CFS; (4) collaborates in the design and conduct of post-infectious fatigues studies and modeling studies of fatigue following immune stimulation; (5) conducts studies of HPV as opportunistic infections in HIV-positive populations; (6) conducts laboratory studies concerning the mechanisms of HPV-induced cervical cancer; (7) conducts laboratory studies to understand the immunology of HPV infection; (8) develops laboratory methods to improve HPV detection and assessment; (9) provides laboratory training and consultation concerning studies of gene expression and bioinformatics; and (10) provides HPV laboratory training and consultation to national, state, local, and foreign authorities concerning cervical cancer control programs.

Herpesvirus Section (HCRU87). (1) Conducts studies on the epidemiology and molecular biology of recently discovered herpesviruses (e.g., HHV–6, HHV–7 and HHV–8); serves as Varicella Zoster Virus National Laboratory to

develop assays and conduct studies assessing the public health impact of immunization against VZV; (3) conducts epidemiology, immunology, and molecular biology studies to design control programs for diseases associated with congenital acquired cytomegalovirus; (4) conducts studies to assess the public health impact of sexually transmitted herpesviruses so as to devise new intervention strategies; (5) conducts studies to assess the public health impact of herpesviruses that are resistant to antiviral drugs; (6) develops, evaluates, and applies new methods for detecting, diagnosing, and understanding the biologic characteristics of human herpesvirus infections; (7) develops and applies new immunologic techniques for characterizing the cellular and humoral immune responses to herpesvrus; (8) develops practical methods for seroepidemiologic studies of these viruses; (9) conducts studies to define the mechanisms and genetic control of herpesvirus latency; and (10) trains laboratorians on molecular techniques and immunological methods for studying herpesvirus infections.

Poxvirus Section (HCRU89). (1) Serves as WHO Collaborating Center for Smallpox and Other Poxvirus Infections: (2) serves as CDC focal point for addressing aspects of bioterrorism involving poxviruses; (3) cooperates with WHO to implement recommendations concerning destruction of smallpox stores; (4) provides reference, diagnostic, clinical, and epidemiologic support for suspected poxvirus infections which may occur worldwide either naturally or as acts of bioterrorism; (5) conducts laboratory studies to develop, evaluate and improve viral and serologic diagnostics that enhance surveillance and counter terrorism activities to control human poxvirus infections; (6) conducts molecular biologic studies to better understand the basis of poxvirus biotype and virulence; and (7) provides laboratory training to personnel from state and local health departments and other national and international organizations on poxvirus diagnostics.

Viral and Rickettsial Zoonoses Branch (HCRU9). (1) Provides epidemic aid, consultation, surveillance, and epidemiologic and ecologic investigations of viral, rickettsial, and bartonella-associated zoonoses domestically and internationally; (2) conducts studies on the microbiology, molecular biology, pathogenesis, and pathology of viral, rickettsial, and bartonella-associated zoonotic infections; (3) provides reference/diagnostic services domestically and internationally; (4) develops, evaluates, and improves methods and reagents for diagnosing viral, rickettsial, and bartonella-associated diseases; (5) develops and evaluates human and animal vaccines and other prophylactic agents for zoonotic diseases and prepares recommendations for their use; (6) serves as a WHO Collaborating Center for Reference and Research on Rabies and a WHO Collaborating Center for Rickettsial and Bartonella-associated Reference and Research; (7) provides consultation and laboratory training to state and local health departments and other national and international organizations; (8) responds to requests for information regarding viral, rickettsial, and bartonella-associated zoonotic diseases and their prevention from CDC, health care providers, academic institutions, state, and local health departments, other government agencies, and the general public; (9) collaborates with government agencies, domestic and international academic institutions, and the private sector in developing novel diagnostic assays and vaccines for viral, rickettsial, and bartonella-associated zoonotic diseases; and (10) maintains the Bioterrorism Laboratory for Coxiella burnetti (Q fever) and rickettsial response and research.

Disease Assessment and Epidemiology Section (HCRU93). (1) Conducts/coordinates surveillance of human and animal rabies, Lyssaviruses, Rocky Mountain spotted fever, Q fever, the ehrlichioses, bartonella-associated diseases, and rickettsial diseases; (2) conducts epidemiological studies to determine modes of transmission, risk factors, and natural history of viral, rickettsial, and bartonella-associated zoonoses; (3) conducts testing of human and animal tissues to assist in the diagnosis of rickettsial and bartonella-associated diseases and provides reports and interpretation of results to health care providers; (4) maintains databases on serologic and molecular biologic test results for rickettsial and bartonella-associated zoonotic diseases; (5) provides consultation to local, state, national, and international public health officials and the general public on the diagnosis, prevention, and/or treatment of viral, rickettsial and bartonella-associated zoonotic diseases; (6) investigates outbreaks and conducts epidemiologic investigations of viral, rickettsial, and bartonella-associated zoonoses; (7) assists in producing and evaluating diagnostic tests for rabies, rickettsial, and bartonella-associated infections; (8) evaluates vaccines and other methods of preventing or controlling viral, rickettsial, and bartonella-associated zoonoses; and (9) coordinates the development of public health policy and recommendations regarding vaccines and prevention strategies for viral, rickettsial, and bartonella-associated zoonoses.

Rabies Section (HCRU97). (1) Serves as a national and international center for reference, training, consultation, and diagnosis of rabies and related zoonoses; (2) develops and evaluates new techniques for rabies diagnosis and distributes reference materials to collaborating laboratories in accordance with CDC and WHO policies; (3) collaborates in the development of new rabies vaccines; (4) conducts studies on rabies pathogenesis; (5) investigates the role of strain variation in the ecology and natural history of rabies virus infection; (6) provides laboratory training on rabies and related viral zoonoses to personnel from state and local health departments, other government agencies, and international governments and organizations; (7) serves as a WHO Collaborating Center for Reference and Research on Rabies; and (8) responds to requests for information from CDC, other government agencies, state and local health departments, health care providers, and the general public.

Rickettsia and Bartonella Section (HCRU98). (1) Conducts microbiologic and molecular biologic research into rickettsiae and bartonellae of public health importance; (2) conducts research into the pathogenesis and pathology of rickettsial diseases; (3) develops and maintains databases containing DNA sequences of targeted genes of interest from rickettsiae and bartonellae; (4) provides for rickettsial and bartonella isolation and assistance in the production of reference reagents; (5) provides consultation services to local, national, and international rickettsiology and bartonella laboratories; (6) develops and evaluates new diagnostic tests for rickettsiae and bartonellae prior to routine use by the Disease Assessment and Epidemiology Section; (7) participates in the production and distribution of rickettsial and bartonella reagents to reference laboratories worldwide in accordance with CDC policies; (8) participates in the development of improved rickettsial and bartonella-associated vaccines; (9) evaluates new therapies and antimicrobial agents for rickettsial and bartonella-associated diseases; (10) serves as a WHO Collaborating Center for Rickettsial and Bartonella-associated Reference and Research; (11) conducts training for

laboratory personnel from state and local public health laboratories as well as other national and international organizations; (12) collaborates with other CDC and government agencies and responds to public inquiries regarding rickettsia, ehrlichia, Q fever, bartonella and other designated zoonoses; and (13) maintains the Bioterrorism Laboratory for Q fever and rickettsial disease response and research.

After the Division of Global Migration ad Quarantine (HCR2), insert the following:

Division of Viral Hepatitis (HCR4). (1) Conducts surveillance and special studies to determine the epidemiology and disease burden associated with acute and chronic infections and liver disease associated with hepatitis viruses; (2) conducts epidemiologic and laboratory studies, including outbreak investigations, to determine risk factors for transmission of infections with hepatitis viruses, define the natural history and pathogenesis of these infections, and determine their health impact; (3) conducts epidemiologic, clinical, laboratory, behavioral, and health communications research to develop and evaluate methods and strategies for the prevention of infections with hepatitis viruses and their acute and chronic disease consequences; (4) develops, implements, communicates, and evaluates recommendations and standards for the prevention and control of infections and liver disease associated with hepatitis viruses; (5) provides technical and programmatic leadership and assistance to state and local health departments, non-governmental organizations, and the international community to develop, implement, and evaluate programs to prevent infections with hepatitis viruses and their consequences, including immunization to prevent hepatitis A and eliminate transmission of hepatitis B virus infection, counseling and testing to prevent and control hepatitis C virus infection, and improvement of transfusion and medical practices and reduced frequency of unsafe injections to prevent transmission of bloodborne virus infections, including hepatitis viruses; (6) provides leadership and coordination to integrate viral hepatitis prevention and control activities into other prevention programs conducted by CDC, other Federal agencies, and health care providers; (7) conducts laboratory, clinical, and epidemiologic studies to develop and evaluate methods for the diagnosis of infections with hepatitis viruses; (8) identifies and characterizes agents and host factors associated with hepatitis and acute and chronic liver disease; (9) provides epidemic aid, epidemiologic and laboratory consultation, reference diagnostic services, and technical assistance to state and local health departments, other federal agencies, other components of CDC, and national and international health organizations; (10) disseminates information through health communications materials, tools and programs, scientific publications, and presentations; (11) provides training opportunities for Epidemic Intelligence Service Officers and others in CDC sponsored programs, including postgraduate students, post-doctoral fellows, and other public health and laboratory scientists; and (12) serves as a WHO Collaborating Center for Reference and Research on Viral Hepatitis.

Office of the Director (HCR41). (1) Directs, administers, and provides oversight for the programs and activities of DVH, including budget formulation and administration; (2) provides leadership and counsel on policy development and interpretation and on program planning, development, management, and evaluation; (3) provides Division-wide administrative and program support services and coordinates and ensures coordination with the appropriate National Center for Infectious Diseases (NCID) and Centers for Disease Control and Prevention (CDC) staff offices; (4) provides the leadership and coordination, including serving on appropriate advisory committees, to integrate viral hepatitis and liver disease prevention and control activities into other prevention programs conducted by NCID, CDC, Department of Health and Human Services, other Federal agencies, international organizations, and other groups; (5) provides leadership and oversight to the provision of state-of-the-art informatics for DVH, including computer systems and equipment, local area networks, computer programs, programming and data management support, and management of DVH internet and intranet websites; (6) provides manuscript review and clearance and coordination and oversight for studies, human subjects review, OMB clearance, Freedom of Information Act (FOIA) requests, other controlled correspondence, and requests for information; (7) coordinates and provides oversight for continuing professional education programs for DVH staff; and (8) provides support to DVH components in writing and editing, preparation of graphics and other visual arts, and conference and exhibit planning, management, and execution.

Epidemiology Branch (HCR42). (1) Monitors and evaluates rates and risk factors associated with acute and chronic infections with hepatitis viruses, viral hepatitis and liver disease through surveillance systems and special studies, including sentinel surveillance; (2) conducts research, including outbreak investigations, clinical trials and population-based demonstration projects, to determine the epidemiology of transmission of known and new hepatitis viruses and their variants, the natural history of infections with hepatitis viruses, evaluate the performance of diagnostic tests for hepatitis virus infections, and evaluate methods and approaches for the prevention and control of hepatitis virus infections; (3) estimates burden attributable to infections with hepatitis viruses and the effectiveness of programs to prevent these infections; (4) provides consultation to state, local, national, and international authorities for the prevention and control of viral hepatitis, the investigation of disease outbreaks, and surveillance of hepatitis and liver disease; (5) disseminates information through scientific publications and presentations; and (6) provides training opportunities for Epidemic Intelligence Service Officers and others in CDC sponsored programs, postgraduate students, post-doctoral fellows, and other public health scientists.

Prevention Branch (HCR43). (1) Develops, administers, implements, and evaluates domestic and international programs to prevent viral hepatitis, including those that serve clients in the public and private sectors, through state and local health departments, health organizations, academic institutions, and non-governmental organizations; (2) provides leadership and coordination for viral hepatitis and liver disease prevention and control programs with other components of CDC, other Federal agencies, and non-governmental agencies and partners; (3) conducts research to ascertain educational and communication needs, best methods of communication, and effectiveness of educational programs for health professionals, the public, and persons in groups at risk for infection with hepatitis viruses and develops and disseminates accurate, timely and effective educational materials, tools, and programs related to the prevention of viral hepatitis and liver disease; (4) develops and implements accurate, timely, and effective educational tools, materials and programs for prevention of viral hepatitis and liver disease; (5)

develops and conducts studies, including economic and behavioral studies, to evaluate the effectiveness of interventions and programs to prevent viral hepatitis and to identify barriers to prevention services such as immunization, counseling, testing, medical referral, and management; (6) develops and evaluates health services models for prevention of infection with hepatitis viruses and associated liver disease; (7) provides leadership and coordinates the development of national standards and performance objectives for prevention of viral hepatitis and liver disease and works with agencies and partners to adopt these standards; (8) develops indicators and measures by which to evaluate the performance and effectiveness of viral hepatitis prevention programs; (9) disseminates information through scientific publications and presentations; and (10) provides training opportunities for Epidemic Intelligence Service Officers and others in CDC sponsored programs, postgraduate students, post-doctoral fellows, and other public health scientists.

Laboratory Branch (HCR44). (1) Conducts research and applies state-of-the-art laboratory methods in support of studies related to the epidemiology, molecular epidemiology, and natural history of acute and chronic infections with hepatitis viruses and liver disease; (2) conducts research to develop and validate diagnostic approaches to identify infections with hepatitis viruses; (3) develops and evaluates methods to prevent acute and chronic infection and disease outcomes, including vaccines; (4) determines the viral, immunologic, and other host responses to infection with hepatitis viruses in humans and animal models; (5) identifies and characterizes agents that cause hepatitis; (6) provides reference diagnostic testing for markers of infection with hepatitis viruses for state and local public health laboratories; (7) provides the leadership and collaboration to ensure the transfer to public health laboratories, both nationally and internationally, state-of-the-art methods and approaches for the identification and diagnosis of infections with hepatitis viruses; (8) develops and maintains archives of clinical specimens from clinical trials and epidemiologic and laboratory studies; (9) disseminates information through scientific publications and presentations; and (10) provides training opportunities for persons in CDC sponsored programs, postgraduate students, post-doctoral fellows, and other public health scientists.

Dated: April 14, 2002.

David W. Fleming,

Acting Director, CDC.

[FR Doc. 02–9248 Filed 4–16–02; 8:45 am]

BILLING CODE 4160–18–M

DEPARTMENT OF HEALTH AND HUMAN SERVICES

Food and Drug Administration

[Docket No. 01E–0363]

Determination of Regulatory Review Period for Purposes of Patent Extension; MIFEPREX; Extension of Comment Period

AGENCY: Food and Drug Administration, HHS.

ACTION: Notice; extension of comment period.

SUMMARY: The Food and Drug Administration (FDA) is extending to April 26, 2002, the comment period for the regulatory review period determination for MIFEPREX, published in the **Federal Register** of January 25, 2002 (67 FR 3724). The agency is taking this action in response to a request for an extension.

DATES: Submit written or electronic comments on the regulatory review period determination for MIFEPREX by April 26, 2002.

ADDRESSES: Submit written comments and petitions to the Dockets Management Branch (HFA–305), Food and Drug Administration, 5630 Fishers Lane, rm. 1061, Rockville, MD 20852. Submit electronic comments to http://www.fda.gov/dockets/ecomments.

FOR FURTHER INFORMATION CONTACT: Claudia V. Grillo, Office of Regulatory Policy (HFD–007), Food and Drug Administration, 5600 Fishers Lane, Rockville, MD 20857, 301–594–2041.

SUPPLEMENTARY INFORMATION: In the **Federal Register** of January 25, 2002 (67 FR 3724), FDA published a document entitled ''Determination of Regulatory Review Period for Purposes of Patent Extension; MIFEPREX.'' The document set forth the determination of the regulatory review period for purposes of patent term extension for the human drug product MIFEPREX. The document announced that FDA determined that the applicable regulatory review period for MIFEPREX was 2,249 days, and that of this time, 593 days had occurred during the testing phase of the regulatory review period, while 1,656 days had occurred during the approval phase. The notice explained how these periods of time were derived.

FDA received a letter dated March 22, 2002, from an attorney representing the Population Council (the patent holder) and others, requesting that the agency extend the comment period on the regulatory review period for 30 days, until April 26, 2002, explaining that additional time was needed to reach a licensing agreement. FDA has determined that it is appropriate to grant this request.

Interested persons may submit to the Dockets Management Branch (see **ADDRESSES**) written or electronic comments on the regulatory review period determination for MIFEPREX on or before April 26, 2002. Three copies of any comments are to be submitted, except that individuals may submit one copy. Comments are to be identified with the docket number found in brackets in the heading of this document. Comments and petitions may be seen in the Dockets Management Branch between 9 a.m. and 4 p.m., Monday through Friday.

Dated: March 27, 2002.

Jane A. Axelrad,

Associate Director for Policy, Center for Drug Evaluation and Research.

[FR Doc. 02–9364 Filed 4–16–02; 8:45 am]

BILLING CODE 4160–01–S

DEPARTMENT OF HOUSING AND URBAN DEVELOPMENT

[Docket No. FR–4734–N–14]

Notice of Submission of Proposed Information Collection to OMB; Small Cities Program Performance Assessment Report

AGENCY: Office of the Chief Information Officer, HUD.

ACTION: Notice.

SUMMARY: The proposed information collection requirement described below has been submitted to the Office of Management and Budget (OMB) for review, as required by the Paperwork Reduction Act. The Department is soliciting public comments on the subject proposal.

DATES: *Comments Due Date:* May 17, 2002.

ADDRESSES: Interested persons are invited to submit comments regarding this proposal. Comments should refer to the proposal by name and/or OMB approval number (2506–0020) and should be sent to: Joseph F. Lackey, Jr., OMB Desk Officer, Office of Management and Budget, Room 10235, New Executive Office Building, Washington, DC 20503; Fax number

202–395–96974; E-mail *Joseph_F._LackeyJr@OMB.EOP.GOV.*

FOR FURTHER INFORMATION CONTACT: Wayne Eddins, Reports Management Officer, QDAM, Department of Housing and Urban Development, 451 Seventh Street, Southwest, Washington, DC 20410; e-mail *Wayne_Eddins@HUD.gov;* telephone (202) 708–2374. This is not a toll-free number. Copies of the proposed forms and other available documents submitted to OMB may be obtained from Mr. Eddins.

SUPPLEMENTARY INFORMATION: The Department has submitted the proposal for the collection of information, as described below, to OMB for review, as required by the Paperwork Reduction Act (44 U.S.C. chapter 35). The Notice lists the following information: (1) The title of the information collection proposal; (2) the office of the agency to collect the information; (3) the OMB approval number, if applicable; (4) the description of the need for the information and its proposed use; (5) the agency form number, if applicable; (6) what members of the public will be affected by the proposal; (7) how frequently information submissions will be required; (8) an estimate of the total number of hours needed to prepare the information submission including number of respondents, frequency of response, and hours of response; (9) whether the proposal is new, an extension, reinstatement, or revision of an information collection requirement; and (10) the name and telephone number of an agency official familiar with the proposal and of the OMB Desk Officer for the Department.

This Notice also lists the following information:

Title of Proposal: Small Cities Program Performance Assessment Report.

OMB Approval Number: 2506–0020.

Form Numbers: HUD–4052.

Description of the Need for the Information and its Proposed Use: The information collected from grant recipients participating in the state-administered CDBG program provides HUD with financial and physical development status of each activity funded. These reports are used to determine grant recipient performance and for HUD's Annual Report to Congress on accomplishments. The Housing and Community Development Act of 1974, as amended, requires grant recipients that receive CDBG funding to submit a Performance Assessment information Report (PAR) on an annual basis to report on program progress; and such records as may be necessary to facilitate review and audit by HUD of the state's administration of CDBG funds (section 104(e)(2)).

Respondents: Business or other for-profit entities—Grant recipients participating in the State-administered CDBG program.

Frequency of Submission: Annually.

	Number of respondents	Annual responses	×	Hours per response	=	Burden hours
Reporting burden	800	1		8		64,00.

Total Estimated Burden Hours: 64,000.

Status: Reinstatement, with minor changes, of a previously approved collection for which approval expired in January 2000.

Authority: Section 3507 of the Paperwork Reduction Act of 1995, 44 U.S.C. 35, as amended.

Dated: April 9, 2002.

Wayne Eddins,

Departmental Reports Management Officer, Office of the Chief Information Officer.

[FR Doc. 02–9258 Filed 4–16–02; 8:45 am]

BILLING CODE 4210–72–M

DEPARTMENT OF THE INTERIOR

Minerals Management Service

Historical Royalty and Production Data

AGENCY: Minerals Management Service (MMS), Interior.

ACTION: Notice of availability.

SUMMARY: MMS implemented a new financial management system on November 1, 2001. As part of the implementation process, royalty and production data reported to our predecessor system was transferred to the new system. Reporters will need this information to make accurate adjustments and corrections to previously reported data. This notice informs reporters where and how they may obtain their historical royalty and production data.

DATES: This information is available April 17, 2002.

ADDRESSES: To request access to historical data via the Internet, send a completed System Access Request Form (SARF) to Minerals Management Service, Attention: Information Technology Center, Policy and Security Group, P.O. Box 25165, Mail Stop 340G4, Denver, CO 80225. To request historical data on a compact disk, send a written request to Minerals Management Service, Reporting Services, Attention: Kathy Ciferri, P.O. Box 5760, Mail Stop 357B1, Denver, CO 80217–5760.

FOR FURTHER INFORMATION CONTACT: Ms. Kathy Ciferri, Minerals Management Service, P.O. Box 5760, MS–357B1, Denver, CO 80217–5760; telephone number (303) 231–3060; fax number (303) 231–3608; e-mail kathleen.ciferri@mms.gov.

SUPPLEMENTARY INFORMATION: Before the new financial management system was implemented November 1, 2001, royalty data reported to MMS on Federal and Indian mineral leases was entered into the Auditing and Financial System (AFS). Production data reported to MMS on Federal and Indian mineral leases was entered into the Production Accounting and Auditing System (PAAS).

As part of the implementation of the new financial management system, MMS converted all royalty data received between January 1, 1983, and October 16, 2001, to the new Report of Sales and Royalty Remittance (Form MMS–2014, revised October 1, 2001) format. MMS converted all production data reported on the Monthly Report of Operations (Form MMS–3160), the Oil and Gas Operations Report (OGOR), and the Production Allocation Schedule Report (PASR) received between January 1, 1983, and October 16, 2001, to the new OGOR and PASR (Forms MMS–4054 and MMS–4058, revised October 1, 2001) formats. This historical royalty and production data is stored in the new financial management system in the revised formats.

This historical data is available to the original reporters of the data. MMS is fully aware of the necessity to protect proprietary data; consequently, data will not be released to anyone, other than the original reporter, unless the requester demonstrates a legal right to that data. MMS will provide historical data by reporter code to companies who merge when complete ownership can be legally demonstrated. Companies that acquire only a portion of another company's leases will not receive

historical data except through specific Freedom of Information Act requests.

To Obtain Historical Data Via the Internet

To obtain historical data via the Internet, refer to MMS's ''Dear Reporter'' letter dated October 22, 2001, for detailed instructions on how to complete the required SARF. The SARF was an attachment to the October 22, 2001 letter, and is also available on MMS's Internet site at www.mrm.mms.gov. Send the SARF to the address listed in the **ADDRESSES** section above. Once the SARF is processed, MMS will advise reporters of the secure Internet site for access to their data. Reporters will have the capability to download their historical royalty and production data from the Internet with the exception of PASR data. The length of time it will take to download the data directly correlates with how much data there is to download and the connection speed to the Internet.

To Obtain Historical Data Via Compact Disk (CD)

To obtain historical data via CD, send a written request to the address listed in the **ADDRESSES** section above. The MMS will provide this CD one time only at no charge to the requestor. The data will be created in ASCII format, fixed-width character size output files. These files can then be easily imported to Microsoft Access or Excel, or downloaded to a mainframe computer. However, as with downloading data from the Internet, the ease of downloading to Microsoft Access or Excel will vary depending on the volume of data to be downloaded. The data must be requested and will be provided by specified reporter code (payor code for royalty data and operator code for production data).

Dated: March 1, 2002.

Milton K. Dial,

Acting Associate Director for Minerals Revenue Management.

[FR Doc. 02–9297 Filed 4–16–02; 8:45 am]

BILLING CODE 4310–MR–U

DEPARTMENT OF LABOR

Employment and Training Administration

Notice of Determinations Regarding Eligibility To Apply for Worker Adjustment Assistance and NAFTA Transitional Adjustment Assistance

In accordance with section 223 of the Trade Act of 1974, as amended, the Department of Labor herein presents summaries of determinations regarding eligibility to apply for trade adjustment assistance for workers (TA–W) issued during the period of March and April, 2002.

In order for an affirmative determination to be made and a certification of eligibility to apply for worker adjustment assistance to be issued, each of the group eligibility requirements of Section 222 of the Act must be met.

(1) that a significant number or proportion of the workers in the workers' firm, or an appropriate subdivision thereof, have become totally or partially separated,

(2) that sales or production, or both, of the firm or subdivision have decreased absolutely, and

(3) that increases of imports of articles like or directly competitive with articles produced by the firm or appropriate subdivision have contributed importantly to the separations, or threat thereof, and to the absolute decline in sales or production.

Negative Determinations for Worker Adjustment Assistance

In each of the following cases the investigation revealed that criterion (3) has not been met. A survey of customers indicated that increased imports did not contribute importantly to worker separations at the firm.

TA–W–40,306; Allgon Telecom, Ltd, Ft. Worth, TX

TA–W–40,637; Steelcraft, Inc., Warren, OH

TA–W–40,803; Lodestar Industrial Contractors, Ltd, Colville, WA

TA–W–40,507; Dresser Piping Specialties, Bradford, PA

In the following cases, the investigation revealed that the criteria for eligibility have not been met for the reasons specified.

Increased imports did not contribute importantly to worker separations at the firm.

TA–W–40,592; Spectrian, Sunnyvale, CA

TA–W–40,952; United Plastic Group, a/k/a Supreme Plastics, Inc., Pharr, TX

TA–W–41,131; David White LLC, Berlin, WI

The workers firm does not produce an article as required for certification under section 222 of the Trade Act of 1974.

TA–W–40,974; XE Systems, Inc., East Rochester, NY

TA–W–41,096; Greystar Corp., Houston, TX

TA–W–41,185; Pittsburgh Logistics Systems, A Subsidiary of Quadrivus, Inc., on Location at LTV Steel Corp., Independence, OH

TA–W–41,185A; Pittsburgh Logistics Systems, A Subsidiary of Quadrivus, Inc., Rochester, PA

TA–W–41,146; Voest-Alpine Industries, A Subsidiary of VA Tech, Cannonsburgh, PA

TA–W–40,906 & A; Quark, Inc., Denver, CO and Quark Enterprises Systems, Dowers Grove, IL

TA–W–41,118; Samuel Steel Pickling Co., Twinsburgh, OH

The investigation revealed that criteria (2) has not been met. Sales or production did not decline during the relevant period as required for certification.

TA–W–40,419; Flextronics International, Portsmouth, NH

TA–W–40,489A; Tilden Mining Co., Ishpeming, MI

The investigation revealed that criteria (1) and (2) have not been met. A significant number or proportion of the workers in the workers' firm, or an appropriate subdivision did not become totally or partially separated. Sales or production did not decline during the relevant period as required for certification.

TA–W–40,999; Cleere Drilling Co., San Angelo, TX

Affirmative Determinations for Worker Adjustment Assistance

The following certifications have been issued; the date following the company name and location of each determination references the impact date for all workers of such determination.

TA–W–41,071; Tyco International Ltd, Tyco Electronics Corp., Arab, AL: January 29, 2000.

TA–W–39,885; Conveyco Manufacturing, Clackamas, OR: August 5, 2000.

TA–W–39,886; Consolidated Steel Services, Inc., Fallentimber, PA: August 8, 2000.

TA–W–39,985; Salz Leathers, Inc., Santa Cruz, CA: August 22, 2000.

TA–W–40,540; Beta Steel Corp., Portage, IN: December 26, 2000.

TA–W–40,241; L and R Aquaculture and Catfish Farms, Inc., d/b/a Coastal Catfish, Old Ocean, TX: September 28, 2000.

TA–W–40,845; Contact Lumber Co., Clear Pine Mouldings, Inc., Prineville, OR: January 8, 2001.

TA–W–40,970; Pleasant Hill Manufacturing, Adair, OK: September 29, 2001.

TA–W–41,157; Kolenda Tool and Die, Inc., Wyoming, MI: January 15, 2001.

TA–W–41,171 Western Log Homes, Inc., Chiloquin, OR: November 2, 2000.

TA–W–40,085; NACCO Materials, Sulligent, AL: September 7, 2000.
TA–W–40,250; Urick Foundry, Erie, PA: October 1, 2000.
TA–W–40,432; Phoenix Finishing Corp., Div. of NRB Industries, Gaffney, SC: December 1, 2000.
TA–W–40,457; Trane Co., A Division of American Standard, La Crosse, WI: October 30, 2000.
TA–W–40,489; Empire Iron Mining Partnership, Palmer, MI: November 30, 2000.
TA–W–40,727; Wells Lamont, Eupora, MS: December 21, 2000.
TA–W–40,771; 3M Company—Packaging Systems Div., Bristol, PA: December 27, 2000.
TA–W–40,831; Burrows Paper Corp., Packaging East, Little Falls, NY: December 31, 2000.
TA–W–40,863; MacDermid Graphic Arts, Inc., Adams, MA: February 6, 2001.
TA–W–40,899; E.J. Footwear, Blairsville, GA: October 24, 2000.
TA–W–40,911; Rhodia, Inc., New Brunswick, NJ: December 12, 2000.
TA–W–40,992; CHF Industries, Inc., Loris, SC: January 29, 2001.
TA–W–40,994; Southwire Company, Southwire Machinery Div., Carrollton, GA: January 31, 2001.
TA–W–41,139; Garvin Industries, Inc., Grand Haven Stamping Plant, Grand Haven, MI: February 20, 2001.

Also, pursuant to Title V of the North American Free Trade Agreement Implementation Act (Pub. L. 103–182) concerning transitional adjustment assistance hereinafter called (NAFTA–TAA) and in accordance with Section 250(a), Subchapter D, Chapter 2, Title II, of the Trade Act as amended, the Department of Labor presents summaries of determinations regarding eligibility to apply for NAFTA–TAA issued during the months of March and April, 2002.

In order for an affirmative determination to be made and a certification of eligibility to apply for NAFTA–TAA the following group eligibility requirements of section 250 of the Trade Act must be met:

(1) that a significant number or proportion of the workers in the workers' firm, or an appropriate subdivision thereof, (including workers in any agricultural firm or appropriate subdivision thereof) have become totally or partially separated from employment and either—

(2) that sales or production, or both, of such firm or subdivision have decreased absolutely,

(3) that imports from Mexico or Canada of articles like or directly competitive with articles produced by such firm or subdivision have increased, and that the increases imports contributed importantly to such workers' separations or threat of separation and to the decline in sales or production of such firm or subdivision; or

(4) that there has been a shift in production by such workers' firm or subdivision to Mexico or Canada of articles like or directly competitive with articles which are produced by the firm or subdivision.

Negative Determinations NAFTA–TAA

In each of the following cases the investigation revealed that criteria (3) and (4) were not met. Imports from Canada or Mexico did not contribute importantly to workers' separations. There was no shift in production from the subject firm to Canada or Mexico during the relevant period.

NAFTA–TAA–05983; Freightliner LLC, Cleveland Truck Manufacturing Plant, Cleveland, NC
NAFTA–TAA–05967; Simmons Food, Inc., McAlester, OK
NAFTA–TAA–05941; BASF Corp., Wyandote, MI
NAFTA–TAA–05923; David White LLC, Berlin, WI
NAFTA–TAA–05843; Vishay Dale Electronics, Film Div., Norfolk, NE
NAFTA–TAA–05735; Corning Cable Systems, Telecommunications Cable Plant, Hickory, NC
NAFTA–TAA–05653; Empire Iron Mining Partnership, Palmer, MI
NAFTA–TAA–05231 & A; Allen Edmonds Shoe Corp., d/b/a/ Maine Shoe, Lewiston, ME and Wilton, ME
NAFTA–TAA–05873; Precision Kidd Steel Co., Inc., Aliquippa, PA

Affirmative Determinations NAFTA–TAA

NAFTA–TAA–05980; Jantzen, Inc., Portland Sewing Facility, Portland, OR: March 5, 2001.
NAFTA–TAA–05892; Garvin Industries, Inc., Grand Haven Stamping Plant, Grand Haven, MI: February 20, 2001.
NAFTA–TAA–05852; Southwire Co., Southwire Machinery Div., Carrollton, GA: February 7, 2001.
NAFTA–TAA–5541; Donaldson—Aercology, Old Saybrook Div., Old Saybrook, CT: November 9, 2000.
NAFTA–TAA–05503; Telair International, Rancho Domingez, CA: October 25, 2000.
NAFTA–TAA–05799; Aalfs Manufacturing, Inc., Texarkana, AR: January 29, 2001.
NAFTA–TAA–05203; Consolidated Steel Services, Inc., Fallentimber, PA: August 8, 2000.

I hereby certify that the aforementioned determinations were issued during the months of March and April, 2002. Copies of these determinations are available for inspection in Room C–5311, U.S. Department of Labor, 200 Constitution Avenue, NW., Washington, DC 20210 during normal business hours or will be mailed to persons who write to the above address.

Dated: April 5, 2002.

Edward A. Tomchick,

Director, Division of Trade Adjustment Assistance.

[FR Doc. 02–9349 Filed 4–16–02; 8:45 am]

BILLING CODE 4510–30–M

DEPARTMENT OF LABOR

Employment and Training Administration

[TA–W–39,382 and NAFTA–4942]

Allied Vaughn, Clinton, Tennessee; Notice of Negative Determination Regarding Application for Reconsideration

By application of December 10, 2001, the company requested administrative reconsideration of the Department's negative determination regarding eligibility for workers and former workers of the subject firm to apply for Trade Adjustment Assistance (TAA) under petition TA–W–39,382, and North American Free Trade Agreement-Transitional Adjustment Assistance (NAFTA–TAA) under petition NAFTA–4942. The denial notices applicable to workers of Allied Vaughn, Clinton, Tennessee, were signed on November 27, 2001, and published in the Federal Register on December 18, 2001 (66 FR 65220 and 66 FR 65221, respectively).

Pursuant to 29 CFR 90.18(c) reconsideration may be granted under the following circumstances:

(1) If it appears on the basis of facts not previously considered that the determination complained of was erroneous;

(2) if it appears that the determination complained of was based on a mistake in the determination of facts not previously considered; or

(3) If in the opinion of the Certifying Officer, a mis-interpretation of facts or of the law justified reconsideration of the decision.

The TAA petition, filed on behalf of workers at Allied Vaughn, Clinton, Tennessee, engaged in customer service activities for a firm which replicated VHS video activities, was denied because the petitioning workers did not

produce an article within the meaning of Section 222(3) of the Act.

The NAFTA–TAA petition, filed on behalf of workers engaged in customer service activities for a firm which replicated VHS video, was denied because the petitioning workers did not produce an article within the meaning of Section 250(a) of the Trade Act, as amended.

The petitioner alleges that the Allied Vaughn, Clinton, Tennessee workers were engaged in activities related to the replication of VHS video cassettes.

Upon examination of the application and information provided in the initial investigation, the Department of Labor concurs with the petitioners' allegation that the workers were engaged in activities related to the replicating of VHS videos.

The petitioner further alleges that the subject plant workers should be tied to another group of workers who were certified under TA–W–39,344 and NAFTA–TAA–4913. Those workers were engaged in the replication of compact discs at the same location under the company name AmericDisc, Inc. This allegation is based on the fact that workers of Allied Vaughn commingled various administrative and other non-manufacturing functions at the Clinton facility.

Prior to December 2000, the two product lines were under the control of Allied Digital Technologies, Clinton, Tennessee. Allied Digital Technologies then sold each product line to a different company. The compact disc line was purchased by AmericDisc, Inc. and the VHS cassette line went to Allied Vaughn, a.k.a. Willette Acquisition Corporation. However, although the companies now owned separate product lines, they agreed to continue to share non-manufacturing workers as a cost saving measure.

Since the workers of Allied Vaughn were engaged exclusively in the replication of VHS cassettes, the inport data of compact discs used to certify workers at AmericDisc, Inc. cannot be used in this investigation.

The major contributing factor leading to the layoffs at the subject plant was completely unrelated to imports of replicated VHS cassettes. The sole catalyst concerned the transfer of AmericDisc, Inc. operations to Canada. This led Allied Vaughn to close the facility, as it was no longer efficient for their needs, effectively causing the subject plant to shift their production domestically.

Finally, since the companies are not legally affiliated, the subject firm cannot be tied to the AmeriDisc, Inc. TAA and/or NAFTA certifications.

Conclusion

After review of the application and investigative findings, I conclude that there has been no error or misinterpretation of the law or of the facts which would justify reconsideration of the Department of Labor's prior decisions. Accordingly, the application is denied.

Signed at Washington, DC, this 19th day of March, 2002.

Edward A. Tomchick,

Director, Division of Trade Adjustment Assistance.

[FR Doc. 02–9346 Filed 4–16–02; 8:45 am]

BILLING CODE 4510–30–M

DEPARTMENT OF LABOR

Employment and Training Administration

[TA–W–39,977, and NAFTA–05262]

Lamtech, LLC, Hartsville, TN; Notice of Negative Determination Regarding Application for Reconsideration

By application of January 21, 2002, the petitioner requested administrative reconsideration of the Department's negative determination regarding eligibility for workers and former workers of the subject firm to apply for Trade Adjustment Assistance (TAA) under petition TA–W–39,977 and North American Free Trade Agreement—Transitional Adjustment Assistance (NAFTA–TAA) under petition NAFTA–5262. The TAA and NAFTA–TAA denial notices applicable to workers of Lamtech, LLC, Hartsville, Tennessee, were signed on December 11, 2001 and published in the **Federal Register** on December 26, 2001 (66 FR 66426 & 66427, respectively).

Pursuant to 29 CFR 90.18(c) reconsideration may be granted under the following circumstances:

(1) If it appears on the basis of facts not previously considered that the determination complained of was erroneous;

(2) if it appears that the determination complained of was based on a mistake in the determination of facts not previously considered; or

(3) if in the opinion of the Certifying Officer, a misinterpretation of facts or of the law justified reconsideration of the decision.

The TAA petition, filed on behalf of workers at Lamtech, LLC, Hartsville, Tennessee engaged in employment related to the production of sew stands and sew tops, was denied because the ''contributed importantly'' group eligibility requirement of section 222(3) of the Trade Act of 1974, as amended, was not met. The ''contributed importantly'' test is generally demonstrated through a survey of the workers' firm's customers. The survey revealed that none of the respondents increased their imports of products like or directly competitive with what the subject plant produced during the relevant period. The subject firm did not import sew stands and sew tops.

The NAFTA–TAA petition for the same worker group was denied because criteria (3) and (4) of the group eligibility requirements in paragraph (a)(1) of Section 250 of the Trade Act, as amended, were not met. The survey revealed that none of the respondents increased their imports of products like or directly competitive with what the subject plant produced from Canada or Mexico during the relevant period. The subject firm did not import (including Canada or Mexico) products like or directly competitive with what the subject plant produced, nor was the subject plant's production shifted from the workers' firm to Mexico or Canada.

The petitioner alleges that their major customers purchased imported products like or directly competitive with what the subject firm produced from foreign sources, specifically Mexico and Central America. The petitioner further states that some of their customers are purchasing products from other domestic sources that are importing.

The Department, as already indicated, examines the impact of imports (including Canada and Mexico) by a survey of the subject firm's major declining customers to examine if the ''contributed importantly'' test is met. The survey conducted during the initial investigation revealed that none of the respondents increased their imports (including Canada or Mexico), while decreasing their purchases from the subject firm during the relevant period.

The petitioner further attached a list of major declining customers with corresponding allegations concerning their customer purchases from foreign sources.

A review of the customer list revealed that some of the major customers were located in foreign countries. Also, some of the domestic customers on the list were surveyed during the initial investigation, the respondents as already indicated, did not increase their imports of products like or directly competitive with what the subject firm produced. A further review of the list in combination with the survey results and data supplied by the company further shows that some of the customers did not purchase any products from the subject firm during the relevant period

and therefore cannot be considered customers of the subject firm. In conclusion, the Department's further review of the customer list provided supports the initial decision.

The petitioner further stated that the respondents may not have had an understanding of what they were being asked in the survey and also may not have answered in a factual manner.

The survey the Department conducted was specific to the products produced by the subject plant, as reported by the company. The respondents in the survey were provided with a Department contact if they needed any further clarification. In respect to the respondents reported results, they are reviewed and accepted if they appear to be filled out correctly. If further clarification of the customer response is necessary, the customer is contacted.

Conclusion

After review of the application and investigative findings, I conclude that there has been no error or misinterpretation of the law or of the facts which would justify reconsideration of the Department of Labor's prior decisions. Accordingly, the application is denied.

Signed at Washington, DC, this 29th day of March, 2002.

Edward A. Tomchick,

Director, Division of Trade Adjustment Assistance.

[FR Doc. 02–9340 Filed 4–16–02; 8:45 am]

BILLING CODE 4510–30–M

DEPARTMENT OF LABOR

Employment and Training Administration

[TA–W–39,162 and NAFTA–04822]

ME International, Inc., Duluth, MN; Notice of Negative Determination on Reconsideration

On February 12, 2002, the Department issued an Affirmative Determination Regarding Application for Reconsideration for the workers and former workers of the subject firm. The notice was published in the **Federal Register** on March 8, 2002 (67 FR 10765).

The Department initially denied TAA to workers of ME International, Inc., Duluth, Minnesota because criteria (1) and (3) were not met. A significant number or proportion of the workers did not become totally or partially separated from employment as required for certification. The ''contributed importantly'' group eligibility requirement of section 222(3) of the Trade Act of 1974, as amended, was not met. Imports did not contribute importantly to the worker separations.

The Department denied NAFTA–TAA because criteria (1), (3) or (4) have not been met. A significant number or proportion of the workers did not become totally or partially separated from employment as required for certification. Imports from Canada or Mexico did not contribute importantly to workers' separations. There was no shift in production from the subject firm to Canada or Mexico during the relevant period.

The workers at the subject firm were engaged in employment related to the production of mining wear parts (such as mill linings).

The petitioner alleges the workers were impacted by increased imports from Canada that are like or directly competitive with what the subject plant produced. The petitioner also states that employment declines occurred at the subject plant during the relevant period meeting the requirements of criterion (1).

The Department of Labor concurs with the petitioners' allegation that employment declines occurred at the subject plant.

On reconsideration, the Department contacted the company for a list of major declining customers of the subject plant and further requested a detailed explanation of the reasons for the declines in sales, production and employment at the subject firm.

The U.S. Department of Labor conducted a survey of the declining customer(s) of the subject firm regarding their purchases of mill linings during the relevant period. The survey revealed that a customer increased their imports of mill linings from Canada, while decreasing their purchases from the subject firm during the relevant period. However, the reduced purchases from the subject firm are relatively small in relation to the sales declines at the subject plant, thus the imports did not contribute importantly to the declines at the subject plant. A major customer, LTV Steel, was not surveyed due to bankruptcy in December 2000. They were a major customer of the subject firm.

The company indicated that the Duluth facility experienced a small decline in sales dollars related to lower prices. The overwhelming majority of those declines was attributed to price concessions given to customers as a direct result of competing with a Canadian company. Price, however, is not a factor relevant to the TAA or NAFTA–TAA investigations that were filed on behalf of workers producing mining wear parts. Any potential lost business due to imports was considered as described in the survey results.

The company provided additional information concerning sales, production and employment declines at the subject plant.

The company indicated that nearly half of the sales declines are the direct result of a shift in subject plant production to Tempe, Arizona. That coupled with softening of Original Equipment Manufacturers (OEM) markets and mining closures and curtailments further contributed to the declines at the subject plant. The combination of these factors account for nearly all the sales and production declines at the subject firm.

The company further indicated that sometime during the third quarter of 2000 it implemented manufacturing efficiencies. These improved manufacturing efficiencies led to a corresponding reduction in the manufacturing work force at the Duluth facility during the relevant period.

Therefore, based on the information as indicated above, imports of products like or directly competitive with what the subject plant produced did not contribute importantly to the declines at the subject firm. Also, the subject plant did not shift any plant production to Canada or Mexico during the relevant period.

The preponderance in the declines in employment at the subject firm is the direct result of a shift in production to another domestic location, softening of OEM markets and mining closures and curtailments and improved manufacturing efficiencies at the subject plant.

Conclusion

After reconsideration, I affirm the original notice of negative determinations regarding eligibility to apply for worker adjustment assistance and NAFTA—Transitional Adjustment Assistance for workers and former workers of ME International, Inc., Duluth, Minnesota.

Signed at Washington, DC, this 25th day of March 2002.

Edward A. Tomchick,

Director, Division of Trade Adjustment Assistance.

[FR Doc. 02–9338 Filed 4–16–02; 8:45 am]

BILLING CODE 4510–30–M

DEPARTMENT OF LABOR

Employment and Training Administration

[TA–W–40,196 and NAFTA–05250]

Motorola, Atlanta Order Fulfillment Center & Consumer Products Division, Suwanee, Georgia; Notice of Negative Determination Regarding Application for Reconsideration

By application of November 15, 2001, the petitioner requested administrative reconsideration of the Department's negative determination regarding eligibility for workers and former workers of the subject firm to apply for Trade Adjustment Assistance (TAA) under petition TA–W–40,196 and North American Free Trade Agreement-Transitional Adjustment Assistance (NAFTA–TAA) under petition NAFTA–05250. The denial notices applicable to workers of Motorola, Atlanta Order Fulfillment Center, and Consumer Products Division, Suwanee, Georgia, were signed on October 30, 2001 (TA–W–40,196), and November 5, 2001 (NAFTA–5250) and published in the **Federal Register** on November 9, 2001 (66 FR 56711) and November 20, 2001 (66 FR 58171), respectively.

Pursuant to 29 CFR 90.18(c) reconsideration may be granted under the following circumstances:

(1) If it appears on the basis of facts not previously considered that the determination complained of was erroneous;

(2) if it appears that the determination complained of was based on a mistake in the determination of facts not previously considered; or

(3) if in the opinion of the Certifying Officer, a mis-interpretation of facts or of the law justified reconsideration of the decision.

The negative TAA determination issued by the Department on October 30, 2001, was based on the finding that imports of products similar to what the subject plant produced (primarily packaged cell phones and distribution) did not contribute importantly to the worker group eligibility requirements under section 222 of the Trade Act of 1974, as amended.

The negative NAFTA–TAA determination issued by the Department on November 5, 2001, was based on the finding that imports (primarily packaged cell phones and distribution) from Canada or Mexico did not contribute importantly to separations at the subject plant, nor were there any shifts in production to Canada or Mexico under paragraph (a)(1) of section 250 of the Trade Act of 1974, as amended.

The application of November 15, 2001 requesting administrative reconsideration indicates that Motorola, Atlanta Order Fulfillment Center, Suwanee, Georgia shifted operations to Elgin, Illinois and Harvard, Illinois for the purpose of supporting cost reduction strategies throughout the corporation. The request further appears to indicate that the Harvard, Illinois facility was certified eligible for TAA benefits due to the fact that manufacturing operations were eliminated. The request further appears to indicate that the evidence used to support certification at the Harvard facility should be sued as grounds for certification of the subject workers.

A review of company data supplied during the initial investigation shows that the preponderance in the declines in employment at the subject plant is related to the transfer of the operations to two affiliated domestic facilities located in Illinois. The domestic transfer and minimal fluctuations in subject plant sales and production and stable customer base do not depict factors of imports impacting the workers of the subject firm.

The production (cellular phones) done at Harvard, Illinois was moved overseas prior to the subject plant's operations being shifted to the Harvard location. The work performed by the workers certified at the Harvard location was different from the work performed by the subject plant. The Atlanta Order Fulfillment Center workers were primarily engaged in the packaging and distribution of products they received from outside affiliated sources. The Consumer Products Division performed administrative support, materials tracking, ordering, engineering and sale/marketing and refurbishing.

The functions as described above are different from those of the workers certified at the Harvard facility. Although the workers at Motorola Personal Communications Sector, Harvard, Illinois (producing cell phones) were certified under TA–W–38,928 and NAFTA–4646 and Motorola, Inc., Energy System Groups, Harvard, Illinois (producing cell phone batteries) were certified under TA–W–37,850, the workers of the subject plant can not tied to those certifications.

Motorola made a business decision to transfer work previously done at Suwanee to Harvard, Illinois as excess capacity occurred. The impact of imports did not eliminate the Suwanee functions, it allowed the company to move those functions elsewhere. The worker separations were caused by the domestic transfer of functions and thus the workers can not be considered for eligibility as those workers at the Harvard, Illinois facility.

Conclusion

After review of the application and investigative findings, I conclude that there has been no error or misinterpretation of the law or of the facts which would justify reconsideration of the Department of Labor's prior decisions. Accordingly, the application is denied.

Signed at Washington, DC, this 12th day of March, 2002.

Edward A. Tomchick,

Director, Division of Trade Adjustment Assistance.

[FR Doc. 02–9348 Filed 4–16–02; 8:45 am]

BILLING CODE 4510–30–M

DEPARTMENT OF LABOR

Employment and Training Administration

[TA–W–39,628]

Henderson Sewing Machine Company, Inc. Andalusia, Georgia; Notice of Negative Determination on Remand

The United States Court of International Trade (USCIT) granted the Secretary of Labor's motion for a voluntary remand for further investigation in *Former Employees of Henderson Sewing Machine Company, Inc.* v. *United States Secretary of Labor,* No 01–00883.

The Department's initial negative determination of eligibility to apply for trade adjustment assistance (TAA) for the workers and former workers of Henderson Sewing Machine Company located in Andalusia, Georgia was issued on August 29, 2001 and published in the **Federal Register** on September 11, 2001 (66 FR 47241). The denial was based the fact that workers of the subject firm did not produce an article within the meaning of Section 223(3) of the Trade Act of 1974.

On voluntary remand, the Department conducted further investigation concerning the eligibility of former workers at Henderson Sewing Company, Inc., Andalusia, Georgia to apply for trade adjustment assistance (TAA).

The results of the investigation on remand revealed that during the relevant period, the company laid off a total of two administrative workers. Another five workers left on their own accord, due to various personal reasons. None of these workers were engaged in the manufacture of any product while employed at the subject facility.

Further, the overwhelming portion of the activities performed at the subject facility relates to the sales of industrial sewing machines and related parts. The company also produces components that attach to the sewing machine (value added) before they are sold. The company indicated that this is a negligible portion of the total functions performed at the subject facility.

Conclusion

After careful consideration of the results of the remand investigation, I affirm the original notice of negative determination of eligibility to apply for trade adjustment assistance for workers and former workers of Henderson Sewing Machine Company, Inc., Andalusia, Georgia.

Signed at Washington, DC this 6th day of February 2002.

Linda G. Poole,

Certifying Officer, Division of Trade Adjustment Assistance.

[FR Doc. 02–9344 Filed 4–16–02; 8:45 am]

BILLING CODE 4510–30–M

DEPARTMENT OF LABOR

Employment and Training Administration

[TA–W–40,920]

Honeywell International, Elyria, Ohio; Notice of Termination of Investigation

Pursuant to section 221 of the Trade Act of 1974, an investigation was initiated on March 4, 2002 in response to a petition that filed on behalf of workers at Honeywell International, Elyria, Ohio.

The petitioner has requested that the petition be withdrawn. Consequently, further investigation in this case would serve no purpose, and the investigation has been terminated.

Signed in Washington, DC this 29th day of March 2002.

Linda G. Poole,

Certifying Officer, Division of Trade Adjustment Assistance.

[FR Doc. 02–9341 Filed 4–16–02; 8:45 am]

BILLING CODE 4510–30–M

DEPARTMENT OF LABOR

Employment and Training Administration

[TA–W–40,246]

Incoe Corporation, North Plant, Frankfort, MI; Notice of Negative Determination Regarding Application for Reconsideration

By application of January 31, 2002, the petitioners requested administrative reconsideration of the Department's negative determination regarding eligibility for workers and former workers of the subject firm to apply for Trade Adjustment Assistance (TAA). The denial notice was signed on December 17, 2001 and published in the **Federal Register** on January 11, 2002 (67 FR 66428).

Pursuant to 29 CFR 90.18(c) reconsideration may be granted under the following circumstances:

(1) If it appears on the basis of facts not previously considered that the determination complained of was erroneous;

(2) if it appears that the determination complained of was based on a mistake in the determination of facts not previously considered; or

(3) if in the opinion of the Certifying Officer, a misinterpretation of facts or of the law justified reconsideration of the decision.

The TAA petition, filed on behalf of workers at Incoe Corporation, North plant, Frankfort, Michigan engaged in the production of plastic injection molds, was denied because the ''contributed importantly'' group eligibility requirement of section 222(3) of the Trade Act of 1974, as amended, was not met. The ''contributed importantly'' test is generally demonstrated through a survey of the workers' firm's customers. However, a survey was not conducted since the products produced by the subject plant were shipped to another affiliated domestic facility. The company did not import products like or directly competitive with what the subject plant produced during the relevant period. The investigation further revealed that the dominant factor leading to the closure of the plant was related to a shift in plant production to another domestic affiliated facility.

The petitioner alleges that the workers do not produce plastic injection molds as addressed in the ''Negative Determination Regarding Eligibility To Apply for Workers Adjustment Assistance''.

A review of the initial investigation indicates that the workers were engaged in activities related to the production of plastic injection molding machine tooling for injection molding systems (injection molding components). The TAA decision was based on the correct products produced by the subject firm. The Department inadvertently referenced the wrong product in the decision.

The petitioner further alleges that a representative from the corporate office was sent to a foreign source to compare the manufacturing processes and prices of the foreign sources products which were like or directly competitive with the subject firm's products. The petitioners indicated that the subject firm exported the product to the foreign source, which in turn sold the product back to the subject firm's only customer (affiliated with the subject firm) in the United States.

The comparison of manufacturing processes and price from a foreign source is not relevant to the TAA investigation that was filed on behalf of workers producing plastic injection molding machine tooling for injection molding systems (injection molding components). In reference to the foreign source shipping products like or directly competitive with what the subject firm produced, the company reported no imports of products like or directly competitive with what the subject plant produced (including the affiliated customer) during the relevant period.

Conclusion

After review of the application and investigative findings, I conclude that there has been no error or misinterpretation of the law or of the facts which would justify reconsideration of the Department of Labor's prior decisions. Accordingly, the application is denied.

Signed in Washington, DC, this 28th day of March, 2002.

Edward A. Tomchick,

Director, Division of Trade Adjustment Assistance.

[FR Doc. 02–9339 Filed 4–16–02; 8:45 am]

BILLING CODE 4510–30–M

DEPARTMENT OF LABOR

Employment and Training Administration

[TA–W–39,417]

Innovex, Inc., Chandler, Arizona; Notice of Negative Determination Regarding Application for Reconsideration

By application of December 19, 2001, petitioners requested administrative reconsideration of the Department's negative determination regarding eligibility for workers and former workers of the subject firm to apply for Trade Adjustment Assistance (TAA). The denial notice applicable to workers of Innovex, Inc., Chandler, Arizona was issued on November 27, 2001, and was published in the **Federal Register** on December 18, 2001 (66 FR 65220).

Pursuant to 29 CFR 90.18(c) reconsideration may be granted under the following circumstances:

(1) If it appears on the basis of facts not previously considered that the determination complained of was erroneous;

(2) If it appears that the determination complained of was based on a mistake in the determination of facts not previously considered; or

(3) If in the opinion of the Certifying Officer, a misinterpretation of facts or of the law justified reconsideration of the decision.

The investigation findings revealed that criterion (3) of the group eligibility requirements of Section 222 of the Trade Act of 1974 was not met. Increased imports of articles like or directly competitive with articles produced by the firm did not contribute importantly to worker separations at the subject firm.

The request for reconsideration claims that the company imported products like or directly competitive with what the subject plant produced, due to a partial shift in plant production to a foreign source. The petitioner provided a list of the subject plant's customers that they believe are now receiving these products for foreign sources.

A review of data supplied during the initial investigation and clarification provided by the company shows that over three-quarters of plant production of flexible circuits was shifted to other domestic locations. The remaining production was shifted to Thailand. The production performed in Thailand is then distributed to countries all over the world. The amount of flexible circuits shipped from Thailand to the firm's customers located in the United States is negligible in relation to the production that was performed at the subject plant.

Conclusion

After review of the application and investigative findings, I conclude that there has been no error or misinterpretation of the law or of the facts which would justify reconsideration of the Department of Labor's prior decision. Accordingly, the application is denied.

Signed at Washington, DC, this 19th day of March 2002.

Edward A. Tomchick,

Director, Division of Trade Adjustment Assistance.

[FR Doc. 02–9345 Filed 4–16–02; 8:45 am]

BILLING CODE 4510–30–M

DEPARTMENT OF LABOR

Employment and Training Administration

[TA–W–40,701]

Internet Arena, Portland, Oregon; Notice of Termination of Investigation

Pursuant to section 221 of the Trade Act of 1974, an investigation was initiated on January 28, 2002, in response to a petition filed on behalf of workers at Internet Arena, Portland, Oregon.

The petitioning group of workers submitting the petition has requested that the petition be withdrawn. Consequently, further investigation in this case would serve no purpose, and the investigation has been terminated.

Signed in Washington, DC this 4th day of April, 2002.

Linda G. Poole,

Certifying Officer, Division of Trade Adjustment Assistance.

[FR Doc. 02–9342 Filed 4–16–02; 8:45 am]

BILLING CODE 4510–30–M

DEPARTMENT OF LABOR

Employment and Training Administration

[TA–W–40,119]

Tennford Weaving, Sanford, Maine; Notice of Negative Determination Regarding Application for Reconsideration

By application of December 31, 2001, the petitioners requested administrative reconsideration of the Department's negative determination regarding eligibility for workers and former workers of the subject firm to apply for Trade Adjustment Assistance (TAA). The denial notice applicable to workers of Tennford Weaving, Sanford, Maine, was issued on December 11, 2001, and was published in the **Federal Register** on December 26, 2001 (66 FR 66426).

Pursuant to 29 CFR 90.18(c) reconsideration may be granted under the following circumstances:

(1) If it appears on the basis of facts not previously considered that the determination complained of was erroneous;

(2) If it appears that the determination complained of was based on a mistake in the determination of facts not previously considered; or

(3) If in the opinion of the Certifying Officer, a mis-interpretation of facts or of the law justified reconsideration of the decision.

The negative TAA determination issued by the Department on December 11, 2001 was based on the fact that the subject plant's assets were sold to Alkahn Labels, Inc., New York, New York and that Alkahn Labels, Inc. did not import woven labels during the relevant period.

The request for administrative reconsideration indicates that Tennford Weaving, Sanford, Maine sold their assets (machinery) to Alkahn Labels, Inc. The new owner of the equipment then shipped the machinery to Weston, West Virginia where some of the machinery was reconfigured for use overseas in Hong Kong.

Declines in subject plant employment is related to the subject plant's machinery being sold on August 1, 2001 to Alkahn Labels, Inc. The new owner consolidated their manufacturing operations by transferring the subject plant machinery to factories located in West Virginia, South Carolina and Hong Kong. The investigation further revealed that the subject plant and Alkahn Labels, Inc. did not import woven labels during the relevant period.

The shift of plant machinery to a foreign source does not meet the ''contributed importantly'' group eligibility requirement of section 222(3) of the Trade Act of 1974, as amended. To meet the eligibility requirements of criterion (3) the increases of imports of articles like or directly competitive with articles produced by the subject firm or appropriate subdivision have to contribute importantly to the separations and to the absolute decline in sales or production. This is not the case for the workers of the subject firm.

The petitioners in their request for administrative reconsideration also attached shipping invoices to their request.

An examination of the attached shipping invoices revealed that Sher

Woven Label, a Division of Alkahn Labels, Inc. primarily shipped products to foreign sources. One invoice reflects a domestic to domestic shipment. Exports of woven labels by the company do not meet the increasing imports eligibility requirements of section 222 of the Trade Act, as amended.

Conclusion

After review of the application and investigative findings, I conclude that there has been no error or misinterpretation of the law or of the facts which would justify reconsideration of the Department of Labor's prior decision. Accordingly, the application is denied.

Signed at Washington, DC, this 11th day of March, 2002.

Edward A. Tomchick,

Director, Division of Trade Adjustment Assistance.

[FR Doc. 02–9347 Filed 4–16–02; 8:45 am]

BILLING CODE 4510–30–M

DEPARTMENT OF LABOR

Employment and Training Administration

[TA–W–39,273]

United States Steel, LLC, Fairless Hills, Pennsylvania; Notice of Revised Determination on Reconsideration

On February 11, 2002, the Department issued a Affirmative Determination Regarding Application on Reconsideration applicable to workers and former workers of the subject firm. The notice will soon be published in the Federal Register.

The Department initially denied TAA to workers of United States Steel, LLC, Fairless Hills, Pennsylvania, engaged in the production of tin mill products because the ''contributed importantly'' group eligibility requirement of section 222(3) of the Trade Act of 1974, as amended, was not met.

On reconsideration, the Department conducted further survey of the major customers of the subject firm regarding their purchases of tin mill products. The survey revealed that major customer significantly increased their imports, while decreasing their purchases from the subject firm during the relevant period.

Conclusion

After careful review of the additional facts obtained on reconsideration, I conclude that increased imports of articles like or directly competitive with tin mill products, contributed importantly to the declines in sales or production and to the total or partial separation of workers of United States Steel, LLC, Fairless Hills, Pennsylvania. In accordance with the provisions of the Act, I make the following certification:

''All workers of United States Steel, LLC, Fairless Hills, Pennsylvania engaged in the production of tin mill products who became totally or partially separated from employment on or after May 4, 2000 are eligible to apply for adjustment assistance under section 223 of the Trade Act of 1974.''

Signed in Washington, DC this 11th day of March 2002.

Edward A. Tomchick,

Director, Division of Trade Adjustment Assistance.

[FR Doc. 02–9337 Filed 4–16–02; 8:45 am]

BILLING CODE 4510–30–M

DEPARTMENT OF LABOR

Employment and Training Administration

[SGA/DFA 02–108]

Grants for Small Faith-Based and Community-Based Non-Profit Organizations

AGENCY: Employment and Training Administration (ETA), Labor.

ACTION: Notice of availability of funds and solicitation for grant applications (SGA). This notice contains all of the necessary information and forms needed to apply for grant funding.

SUMMARY: The Employment and Training Administration (ETA), U.S. Department of Labor (DOL) announces the availability of funds to award a grant to ''grass-roots'' organizations or small faith-based and community-based non-profit organizations with the ability to connect to the nation's workforce development system. The term ''grassroots'' is defined under the Eligibility Criteria.

This grant award has three important objectives:

- Increase the number of faith-based and community-based organizations serving as committed and active partners in the One-Stop delivery system .
- Expand the access of faith-based and community-based organizations' clients and customers to the services offered by the nation's One-Stops.
- Identify, document, showcase and replicate successful and innovative instances of faith- and community-based involvement in One-Stop delivery system-building.

ETA has identified $500,000 from funds authorized under Section 171 of the Workforce Investment Act for this competition to meet the system-building objectives.

DATES: The closing date for receipt of applications is Monday, May 20, 2002. Application must be received by 4 p.m. (Eastern Standard Time) at the address below: No exceptions to the mailing and hand-delivery conditions set forth in this notice will be granted. Applications that do not meet the conditions set forth in this notice will not be honored. Telefacsimile (FAX) applications will not be honored. Applicants are advised that the Department's receipt of mail has encountered delays because of mail screening procedures at local post offices.

ADDRESSES: Applications must be mailed to the U.S. Department of Labor, Employment and Training Administration, Division of Federal Assistance, Attention: Ms. Linda Forman, SGA/DFA 02–108, 200 Constitution Avenue, NW., Room S–4203, Washington, DC 20210.

Late Proposals. A proposal received at the designated office after the exact time specified for receipt will not be considered unless it is received before the award is made and it:

- Was sent by U.S. Postal Service registered or certified mail not later than the fifth day (5th) calendar day before the closing date specified for receipt of applications (*e.g.* an offer submitted an response to a solicitation requiring receipt of application by the 20th of the month must be mailed by the 15th):
- Was sent by U.S. Postal Service Express Mail Next Day Service, Post Office to Addressee, not later than 5 p.m. at the place of mailing two working days prior to the deadline date specified for receipt of proposals in this SGA. The term ''working days'' excludes weekends and U.S. Federal holidays.

The only acceptable evidence to establish the date of mailing of an application received after the deadline date for the receipt of proposals sent by the U.S. Postal Service registered or certified mail is the U.S. postmark on the envelope or wrapper affixed by the U.S. Postal Service and on the original receipt from the U.S. Postal Service. The term ''post marked'' means a printed, stamped, or otherwise place impression (exclusive of a postage meter machine impression) that is readily identifiable without further action as having been supplied or affixed on the date of mailing by employees of the U.S. Postal Service.

Withdrawal of Applications. Applications may be withdrawn by written notice or telegram (including mailgram) received at any time before an award is made. Application may be

withdrawn in person by the applicant or by an authorized representative thereof, if the representative's identify is made known and the representative signs a receipt for the proposal.

FOR FURTHER INFORMATION CONTACT: Questions should be faxed to Linda Forman, Grants Management Specialist, Division of Federal Assistance, Fax (202) 693–3296. This is not a toll-free number. All inquiries should include the SGA 02–108 and a contact name, fax and phone number. This solicitation will be published on the Internet on the Employment and Training Administration's home page at *http://www.doleta.gov.* Award notifications will also be published on this home page.

SUPPLEMENTARY INFORMATION: Through this grant award, ETA seeks to ensure that an important Workforce Investment Act tenet—universal access to the programs and services offered under WIA—is further rooted in the customer-responsive delivery systems already established by the Governors, local elected officials and local Workforce Investment Boards. Through this grant competition, ETA also reaffirms its continuing commitment to those customer-focused reforms instituted by State and local governments which help Americans access the tools they need to manage their careers through information and high quality services, and to help U.S. companies find skilled workers.

On January 29, 2001, President George W. Bush issued Executive Order 13198, creating the Office for Faith-Based and Community Initiatives in the White House and centers in the departments of Labor, Health and Human Services (HHS), Housing and Urban Development (HUD), Education (ED), Justice (DOJ). President Bush charged the Cabinet centers with identifying statutory, regulatory, and bureaucratic barriers that stand in the way of effective faith-based and community initiatives, and to ensure, consistent with the law, that these organizations have equal opportunity to compete for federal funding and other support.

SGA/DFA 02–108 reflects the outcome of discussions between the Department's Center for Faith-Based and Community-Based Initiatives (CFBCI) and ETA to provide expanded opportunities for the Federal-State-local partnerships under WIA to engage the faith-based and community-based organizations in service delivery, while providing additional points of entry for customers into the One-Stop system. The solicitation also reflects the Administration's interest in creating new avenues through which qualified ''grass-roots'' organizations can more fully participate under the Workforce Investment Act while bringing their particular strengths and talents in service provision to the customers. A Training and Employment Guidance Letter (TEGL) will be issued in April 2002 to state workforce agencies, worker adjustment liaisons, workforce liaisons, and One-Stop Center system leads. The TEGL will request these principals to commit to a full engagement with faith-based and community-based organizations. The TEGL will encourage local workforce boards to appoint member(s) who are familiar with the FBOs/CBOs that provide job training, soft skills training and employment services in the labor market, and work in conjunction with the state workforce agency's faith-based liaison to share ideas and collect promising practices. The TEGL also will ask the state principals to collaborate with the local workforce investment areas in creating a campaign to educate the appropriate FBOs/CBOs about the workforce investment system, One-Stop Centers, available grants-in-aid, and to invite their participation.

Faith-based and community-based organizations present credentials for full partnership in our mutual system-building endeavors. FBOs/CBOs are often trusted institutions within our poorest neighborhood, serving the very hardest-to-reach constituents in a cost-effective manner. FBOs/CBOs are home to a large number of volunteers who not only bring the transformational power of personal relationships to the provision of social service but a sustained allegiance to the well-being of their participants they serve. Through their daily work and specific programs, FBOs/CBOs strive to achieve some common purposes shared with government—reduction of welfare dependency, attainment of occupational skills, entry and retention of all our citizens in good-paying jobs. With appropriate planning, the FBO/CBO programs and resources can be leveraged into the workforce investment strategies already embodied in State and local strategic plans.

This grant is made under the following authorities:

- The Workforce Investment Act of 1998 (WIA or the Act) (Pub. L. 105–220, 29 U.S.C. 2801 *et seq.*)
- WIA Final Rule, 20 CFR parts 652, 660–671 (65 FR 49294 (August 11, 2000));
- Interim Final Rule implementing the nondiscrimination and equal opportunity provision (section 188) of WIA, 29 CFR part 37 (64 FR 61692 (November 12, 1999));
- Planning Guidance and Instructions for Submission of the Strategic Five-Year State Plan for title I of the Workforce Investment Act of 1998 and the Wagner-Peyser Act (64 FR 9402 (February 25, 1999))
- Final Unified Plan Planning Guidance (65 FR 2464 (January 14, 2000))
- Executive Order 13198; ''Rallying the Armies of Compassion''
- ''Report on a Unlevel Playing Field: Barriers to Participation by Faith-Based and Community Organization in Federal Service Programs''

Additional Background Information

The Workforce Investment Act of 1998 (WIA) established a comprehensive reform of existing Federal job training programs with amendments impacting service delivery under the Wagner-Peyser Act, Adult Education and Literacy Act, and the Rehabilitation Act. A number of other Federal programs are also identified as required partners in the One-Stop delivery system to provide comprehensive services for all Americans to access the information and resources available that can help in the achievement of their career goals. The intention of the One-Stop system is to establish a network of programs and providers in co-located and integrated settings that are accessible for individuals and businesses alike in over 600 workforce investment areas established throughout the nation.

One of the principles of WIA is empowerment of local leaders and organizations to respond to community issues and needs. Under WIA, state and local Workforce Investment Boards are required to develop strategies and programs that address the workforce development needs of their communities and develop an awareness of the range of worker education, training and employment, and other services offered throughout the local area.

Under WIA, services are provided to adults/dislocated workers and eligible youth 14–21 years of age. There are three levels of services for adults/dislocated workers—core services, intensive services and training. While these services are provided through the One-stop center, service providers (approved by the local board), including contracts with private non-profits may provide core and intensive services.

Intensive Services include: Assessment of skill levels; development of an individual employment plan; group counseling; individual counseling

and career counseling and planning; case management; and short-term prevocational services to prepare individuals for unsubsidized employment or training.

Local boards are required to establish Youth Councils as a sub group. As authorized by the Board Chair, the youth Council is responsible for developing portions of the local plan relating to youth and recommending the providers of youth activities. Most youth services are delivered by entities that are competitively awarded a grant or contract by the local board to provide services. An individual assessment of skill levels and service needs and the development of a youth service strategy are required for each youth participant.

Elements of Youth Programs Include: Tutoring; study skills training and instruction (leading to secondary school completion); summer employment opportunities directly linked to academic and occupational learning; paid and unpaid work experience, occupational skill training; leadership development opportunities; adult mentoring; comprehensive guidance and counseling including career counseling; and follow-up services. Further information on WIA is published at *www.usworkforce.org*.

The provided services under this grant would supplement the services that local One-Stop delivery systems currently provide. The recipient organizations receiving grant funds will partner with the local Workforce Investment Boards and One-Stop operators to carry out various services of direct benefit to customers. The organization would offer, for example, ''soft-skills'' training such as communications, problem-solving, and time management which will allow the individual to function in a new work environment. Other activities can include GED tutoring of at-risk youth, after school programs for youth, day care for elders, job loss counseling, language translation services, ''community audits'' (a resource guide to support services within the community), and ''cultural sensitivity'' training programs.

Funding Availability

A total of $500,000 is reserved for small private non-profit or ''grassroots'' organizations to provide authorized services to WIA participants. ETA expects to award approximately 20 to 25 grants under this competition. *Each grant award will range from $20,000 to $25,000 based on the proposal.*

Period of Performance

The period of performance is one year.

Application Guidelines

Eligible Applicants

DOL will consider a ''grassroots'' or small faith-based and community-based non-profit organizations if:

(a) The organization is headquartered in the local community to which it provides services; and,

(i) Has a social services budget of $300,000 or less, or

(ii) Has 6 or fewer full-time equivalent employees.

(b) Local affiliates of national organizations are not considered ''grassroots.''

(c) The $300,000 or less budget includes only that portion of an organization's budget allocated to providing social services. It does not include other portions of the budget such as salaries and expenses.

Note: Except as specifically provided, DOL/ETA acceptance of a proposal and an award of federal funds to sponsor any program(s) does not provide a waiver of any grant requirement and/or procedures. For example, the OMB circulars require that an entity's procurement transaction must be conducted, as practical, to provide open and free competition. If a proposal identifies a specific entity to provide the services, the DOL/ETA's award does not provide the justification or basis to sole-source the procurement, *i.e.*, avoid competition.

Application Process

The application must clearly identify the applicant (or the fiscal agent), the grant recipient (and/or fiscal agent), and its capacity to administer this project. Applicants must submit one copy with an original signature and two additional copies of their proposal. The proposal must include the Application for Federal Assistance (SF 424A), signed by an authorized representative of the organization to enter into grant agreement.

This application must be double-spaced, and on single-sided, numbered pages. There are four required sections:

Section I—Application for Federal Assistance (SF 424A);
Section II—Executive Summary;
Section III—Statement of Work;
Section IV—Budget Information (SF 424B).

Note: ETA will not consider applications that fail to provide complete information in these four sections.

Format Requirements

- A ''page'' is 8.5″ x 11″ (on one side only) with one-inch margins (top, bottom, and sides).
- Double-space (no more than three lines per vertical inch).
- If using a proportional computer font, use no smaller than 12-point font, and an average character density no greater than 10 characters per inch.

Section I— *Application for Federal Assistance—See* (SF–424A) Form included in the announcement (*See* APPENDIX ''A'').

Section II—*Executive Summary* (not to exceed 2 single-spaced pages)

Each applicant must submit an Executive Summary identifying the following:

- The applicant's capacity to administer this project (including affiliate organizations that will be part of the grant.
- The geographic area to be served through this grant (*e.g.* identifiable subset of local workforce investment areas within the state).
- The amount of funding requested and planned period of performance up to one year.
- Applicant must ensure that *applicant* and *constituent organizations* will cooperate and coordinate with all entities receiving funding under the Workforce Investment Act.
- Timeline for project activities to be undertaken in the Statement of Work.

Section III—*Statement of Work* (not to exceed 3–5 double-spaced pages)

The Statement of Work sets forth a strategic plan for the use of awarded funds, establishes measurable goals for increasing ''organizational'' participation in the One-Stop service delivery system to more fully serve the clientele and members of community-based and faith-based organizations. *Statement of Work* should address plans for providing soft-skill training and core and intensive services as described in the announcement. This may include any appropriate mix of services for adults/dislocated workers and/or youth. The narrative will be evaluated in accordance with the guidance under ''Review Process and Evaluation Criteria'' in this announcement. The following should be incorporated in the Statement of Work:

- Describe the population to be served.
- Describe the services and/or soft-skills training to be provided.
- Describe current and/or proposed involvement with local Workforce Investment Boards and One-Stop Centers.
- Describe any relevant history in managing resources through grant awards from Federal, State or units of local governments, and/or from private organizations.
- Describe objectives, how project results will be measured, and who will

be responsible for providing DOL financial and quarterly information.

Section IV—*Budget Information*—(See APPENDIX ''B'')

Note: *Administrative Costs:* Pursuant to 20 CFR 667.210(b), grantees are advised that there is a 10% limitation on administrative costs on funds administered under this grant. The Grant Officer may, however, approve additional administrative costs, up to a maximum of 15% of the total award amount, for that grantee providing adequate justification. In no event, may administrative costs exceed 15% of the total award amount. The cost of administration shall include those disciplines enumerated in 20 CFR 667.220(b) and (c).

Review Process and Evaluation Criteria

ETA, CFBCI and other Federal agency staff are expected to serve on the technical panel(s) that will review all applications against the criteria listed below. The panel recommendations are advisory. The ETA grant officer will fully consider the panel recommendations but take into account geographical balance and other factors to ensure the most advantageous award of these funds to accomplish the system-building purposes outlined in the Summary and Statement of Work. The grant officer may consider any information that comes to his or her attention The grant officer reserves the right to award without further negotiation. Each application will be evaluated against the following rating criteria.

Performance History With Grants Management (10 points)

The applicant must provide a statement of its performance history with managing resources under governmental grants-in-aid programs. The Department will be evaluating applications based on scope, strength, and record of achievement. Applicant may provide a recent history of any involvement as a partner or provider in the Workforce Development system.

Strategic Plan (25 points)

The applicant must describe how it plans to use the investments and activities under this grant to prepare individuals for career opportunities and the skills needed by employers. The applicant must clearly describe how unmet customer workforce needs will be accomplished and illustrate its ability to help bridge those needs.

''Organizational'' Involvement of the One-Stop Service Delivery System (40 points)

The applicant must describe thoroughly plans to work as partners with the One-Stop Service Delivery system to provide clients with the needed skills and training in preparation for entering the workforce. The applicant should include plans to brief One-Stop centers in the local area about the purpose of this grant and the CFBCI/ETA faith- and community-based initiative. Applicant should include ideas for further strengthening these CBO and FBO relationships with the One-Stop delivery system.

Performance Accountability (25 points)

The applicant must describe the methodology for measuring success of this project. The objectives must be clearly defined and the applicant must describe how it will report the number of participants served, (a) how many received employment, (b) training and/or services, (c) number of applicants that were referred to local One-Stop center after receiving soft skills training. The applicant should describe how customers and the staff who serve them are provided with opportunities for suitable access to One-Stop Career Centers, neighborhood centers, and on-line web-based applications that provide valuable information on services, training, jobs, career and local labor market information.

Reporting Requirement

DOL must receive a quarterly report that addresses scope of work, progress under grant, and financial reporting. Further, a final report is required that summarizes progress, and accomplished objectives, and final financial report that includes expenditures.

Signed in Washington, DC, this 10th day of April 2002.

James W. Stockton,

Grant Officer.

APPENDIX A: (SF) 424—Application Form

APPENDIX B: Budget Information Form

BILLING CODE 4510–30–P

APPLICATION FOR FEDERAL ASSISTANCE

APPENDIX "A"

OMB Approval No. 0348-0043

		2. DATE SUBMITTED	Applicant Identifier
1. TYPE OF SUBMISSION: Application ☐ Construction ☐ Non-Construction	Preapplication ☐ Construction ☐ Non-Construction	3. DATE RECEIVED BY STATE	State Application Identifier
		4. DATE RECEIVED BY FEDERAL AGENCY	Federal Identifier

5. APPLICANT INFORMATION

Legal Name:	Organizational Unit:
Address (give city, county, State and zip code):	Name, telephone number and fax number of the person to be contacted on matters involving this application (give area code):

6. EMPLOYER IDENTIFICATION NUMBER (EIN):

☐☐-☐☐☐☐☐☐☐

7. TYPE OF APPLICANT: (enter appropriate letter in box) ☐

A. State
B. County
C. Municipa J . Private University
D. Township
E. Interstate L. Individual
F. Intermunicipal
G. Special District
H Independent School Dist.
I State Controlled Institution of Higher Learning
K Indian Tribe
M. Profit Organization
N. Other (Specify): _____

8. TYPE OF APPLICATION:
☐ New ☐ Continuation ☐ Revision

If Revision, enter appropriate letter(s) in box(es): ☐ ☐

A. Increase Award B. Decrease Award C. Increase Duration
D. Decrease Duration Other (specify):

_____

9. NAME OF FEDERAL AGENCY:

10. CATALOG OF FEDERAL DOMESTIC ASSISTANCE NUMBER:

☐☐-☐☐☐

TITLE:

11. DESCRIPTIVE TITLE OF APPLICANT'S PROJECT:

12. AREAS AFFECTED BY PROJECT (cities, counties, States, etc.):

13. PROPOSED PROJECT:		14. CONGRESSIONAL DISTRICTS OF:	
Start Date	Ending Date	a. Applicant	b. Project

15. ESTIMATED FUNDING:		
a. Federal	$	.00
b. Applicant	$	.00
c. State	$	.00
d. Local	$	.00
e. Other	$	.00
f. Program Income	$	.00
g. TOTAL	$	.00

16. IS APPLICATION SUBJECT TO REVIEW BY STATE EXECUTIVE ORDER 12372 PROCESS?

a. YES. THIS PREAPPLICATION/APPLICATION WAS MADE AVAILABLE TO THE STATE EXECUTIVE ORDER 12372 PROCESS FOR REVIEW ON

DATE _____

b. NO. ☐ PROGRAM IS NOT COVERED BY E.O. 12372

☐ OR PROGRAM HAS NOT BEEN SELECTED BY STATE FOR REVIEW

17. IS THE APPLICANT DELINQUENT ON ANY FEDERAL DEBT?

☐ Yes If "Yes," attach an explanation. ☐ No

18. TO THE BEST OF MY KNOWLEDGE AND BELIEF, ALL DATA IN THIS APPLICATION/PREAPPLICATION ARE TRUE AND CORRECT. THE DOCUMENT HAS BEEN DULY AUTHORIZED BY THE GOVERNING BODY OF THE APPLICANT AND THE APPLICANT WILL COMPLY WITH THE ATTACHED ASSURANCES IF THE ASSISTANCE IS AWARDED.

a. Typed Name of Authorized Representative	b. Title	c. Telephone number
d. Signature of Authorized Representative		e. Date Signed

Previous Editions Not Usable

Standard Form 424 (REV 4-88)
Prescribed by OMB Circular A-102

Authorized for Local Reproduction

INSTRUCTIONS FOR THE SF 424

This is a standard form used by applicants as a required facesheet for preapplications and applications submitted for Federal assistance. It will be used by Federal agencies to obtain applicant certification that States which ave established a review and comment procedure in response to Executive Order 12372 and have selected the program to be included in their process, have been given an opportunity to review the applicant's submission.

Item:	Entry:
1.	Self-explanatory.
2.	Date application submitted to Federal agency (or State if applicable) & applicant's control number (if applicable).
3.	State use only (if applicable)
4.	If this application is to continue or revise an existing award, enter present Federal identifier number. If for a new project, leave blank.
5.	Legal name of applicant, name of primary organizational unit which will undertake this assistance activity, complete address of the applicant, and name and telephone number of the person to contact on matters related to this application.
6.	Enter Employer Identification Number (EIN) as assigned by the Internal Revenue Service.
7.	Enter the appropriate letter in the space provided.
8.	Check appropriate box and enter appropriate letter(s) in the space(s) provided. - "New" means a new assistance award. - "Continuation" means an extension for an additional funding/budget period for a project with a projected completion date. - "Revision" means any change in the Federal Government's financial obligation or contingent liability from an existing obligation.
9.	Name of Federal agency from which assistance is being requested with this application.
10.	Use the Catalog of Federal Domestic Assistance number and title of the program under which assistance is required.
11.	Enter a brief descriptive title of the project. If more than one program is involved, you should append an explanation on a separate sheet. If appropriate (e.g., construction or real property projects), attach a map showing project location. For preapplications, use a separate sheet to provide a summary description of the project.
12.	List only the largest political entities affected (e.g., State, counties, cities.
13.	Self-explanatory.
14.	List the applicant's Congressional District and any District(s) affected by the program or project.
15.	Amount requested or to be contributed during the first funding/budget period by each contributor. Value of in-kind contributions should be included on appropriate lines as applicable. If the action will result in a dollar change to an existing award, indicate only the amount of the change. For decreases, enclose the amounts in parentheses. If both basic and supplemental amounts are included, show breakdown on an attached sheet. For multiple program funding, use totals and show breakdown using same categories as item 15.
16.	Applicants should contact the State Single Point of Contact (SPOC) for Federal Executive Order 12372 to determine whether the application is subject to the State intergovernmental review process.
17.	This question applies to the applicant organization, not the person who signs as the authorized representative. Categories of debt include delinquent audit disallowances, loans and taxes.
18.	To be signed by the authorized representative of the applicant. A copy of the governing body's authorization for you to sign this application as official representative must be on file in the applicant's office. (Certain Federal agencies may require that this authorization be submitted as part of the application.)

PART II - BUDGET INFORMATION

SECTION A - Budget Summary by Categories ***APPENDIX "B"***

	(A)	(B)	(C)
1. *Personnel*	$		
2. *Fringe Benefits (Rate)*			
3. *Travel*			
4. *Equipment*			
5. *Supplies*			
6. *Contractual*			
7. *Other*			
8. *Total, Direct Cost (Lines 1 through 7)*			
9. *Indirect Cost (Rate %)*			
10. *Training Cost/Stipends*			
11. *TOTAL Funds Requested (Lines 8 through 10)*			

SECTION B - Cost Sharing/ Match Summary (if appropriate)

	(A)	(B)	(C)
1. *Cash Contribution*			
2. *In-Kind Contribution*			
3. *TOTAL Cost Sharing / Match (Rate %)*			

NOTE: *Use Column A to record funds requested for the initial period of performance (i.e. 12 months, 18 months, etc.); Column B to record changes to Column A (i.e. requests for additional funds or line item changes; and Column C to record the totals (A plus B).*

SECTION A - Budget Summary by Categories

1. **Personnel:** *Show salaries to be paid for project personnel which you are required to provide with W2 forms.*

2. **Fringe Benefits:** *Indicate the rate and amount of fringe benefits.*

3. **Travel:** *Indicate the amount requested for staff travel. Include funds to cover at least one trip to Washington, DC for project director or designee.*

4. **Equipment**: *Indicate the cost of non-expendable personal property that has a useful life of more than one year with a per unit cost of $5,000 or more. Also include a detailed description of equipment to be purchased including price information.*

5. **Supplies:** *Include the cost of consumable supplies and materials to be used during the project period.*

6. **Contractual:** *Show the amount to be used for (1) procurement contracts (except those which belong on other lines such as supplies and equipment); and (2) sub-contracts/grants.*

7. **Other:** *Indicate all direct costs not clearly covered by lines 1 through 6 above, including consultants.*

8. **Total, Direct Costs:** *Add lines 1 through 7.*

9. **Indirect Costs:** *Indicate the rate and amount of indirect costs. Please include a copy of your negotiated Indirect Cost Agreement.*

10. **Training /Stipend Cost:** *(If allowable)*

11. **Total Federal funds Requested:** *Show total of lines 8 through 10.*

SECTION B - Cost Sharing/Matching Summary

Indicate the actual rate and amount of cost sharing/matching when there is a cost sharing/matching requirement. Also include percentage of total project cost and indicate source of cost sharing/matching funds, i.e. other Federal source or other Non-Federal source.

NOTE: PLEASE INCLUDE A DETAILED COST ANALYSIS OF EACH LINE ITEM.

[FR Doc. 02–9259 Filed 4–16–02; 8:45 am]
BILLING CODE 4510–30–C

DEPARTMENT OF LABOR

Employment and Training Administration

[SGA/DFA 02–106]

Grants for States

AGENCY: Employment and Training Administration (ETA), Labor.

ACTION: Notice of availability of funds and solicitation for grant applications (SGA).

This notice contains all of the necessary information and forms needed to apply for grant funding.

SUMMARY: The Employment and Training Administration (ETA), U.S. Department of Labor (DOL) announces the availability of funds to be awarded to States under one of three separate competitions to award grants to (1) States, (2) intermediaries, and (3) small faith-based and community-based non-profit organizations. These awards have three important objectives:

- Increase the number of faith-based and community-based organizations serving as committed and active partners in the One-Stop delivery system
- Expand the access of faith-based and community-based organizations' clients and customers to the services offered by the nation's One-Stops
- Identify, document, showcase and replicate successful and innovative instances of faith- and community-based involvement in our system-building.

ETA has identified $14.9 million from the FY 2001 appropriation for One-Stop/America's Labor Market Information System and $500,000 from funds authorized under Section 171 of the Workforce Investment Act for these system-building objectives. A total of $9.9 million is available to be awarded to States under this notice.

DATE: The closing date for receipt of applications is Thursday, May 16, 2002. Application must be received by 4 p.m. (Eastern Standard Time) at the address below: No exceptions to the mailing and hand-delivery conditions set forth in this notice will be granted. Applications that do not meet the conditions set forth in this notice will not be honored. Telefacsimile (FAX) applications will not be honored. Applicants are advised that the Department's receipt of mail has encountered delays because of mail screening procedures at local post offices.

ADDRESSES: Applications must be mailed to the U.S. Department of Labor, Employment and Training Administration, Division of Federal Assistance, Attention: B. Jai Johnson, SGA/DFA 02–106, 200 Constitution Avenue, NW., Room S–4203, Washington, DC 20210

Hand Delivered Proposals. If proposals are hand delivered, they must be received at the designated address by 4 p.m., Eastern Time on Thursday, May 16, 2002. All overnight mail will be considered to be hand delivered and must be received at the designated place by the specified closing date and time. Telegraphed, e-mail and/or fax proposals will not be honored. Failure to adhere to the above instructions will be a basis for determination of non-responsive.

Late Proposals. A proposal received at the designated office after the exact time specified for receipt will not be considered unless it is received before the award is made and it:

- Was sent by U.S. Postal Service registered or certified mail not later than the fifth day (5th) calendar day before the closing date specified for receipt of applications (e.g. an offer submitted a response to a solicitation requiring receipt of application by the 20th of the month must be mailed by the 15th):
- Was sent by U.S. Postal Service Express Mail Next Day Service, Post Office to Addressee, not later than 5 p.m. at the place of mailing two working days prior to the deadline date specified for receipt of proposals in this SGA. The term ''working days'' excludes weekends and U.S. Federal holidays.

The only acceptable evidence to establish the date of mailing of an application received after the deadline date for the receipt of proposals sent by the U.S. Postal Service registered or certified mail is the U.S. postmark on the envelope or wrapper affixed by the U.S. Postal Service and on the original receipt from the U.S. Postal Service. The term ''post marked'' means a printed, stamped, or otherwise place impression (exclusive of a postage meter machine impression) that is readily identifiable without further action as having been supplied or affixed on the date of mailing by employees of the U.S. Postal Service.

Withdrawal of Applications. Applications may be withdrawn by written notice or telegram (including mailgram) received at any time before an award is made. Application may be withdrawn in person by the applicant or by an authorized representative thereof, if the representative's identity is made known and the representative signs a receipt for the proposal.

FOR FURTHER INFORMATION CONTACT: Questions should be faxed to B. Jai Johnson, Grants Management Specialist, Division of Federal Assistance, Fax (202) 693–2879. This is not a toll-free number. All inquiries should include the SGA number (DFA 02–106) and a contact name, fax and phone number. This solicitation will also be published on the Internet on the Employment and Training Administration's Homepage at *http://www.doleta.gov*. Award notifications will also be published on this Homepage.

SUPPLEMENTARY INFORMATION: Through the grants awarded under these three announcements, ETA seeks to ensure that an important Workforce Investment Act tenet—universal access to the programs and services offered under WIA—is further rooted in the customer-responsive delivery systems already established by the Governors, local elected officials and local Workforce Investment Boards. Through these grant competitions, ETA also reaffirms its continuing commitment to those customer-focused reforms instituted by State and local governments which help Americans access the tools they need to manage their careers through information and high quality services, and to help U.S. companies find skilled workers.

On January 29, 2001, President George W. Bush issued Executive Order 13198, creating the Office for Faith-Based and Community Initiatives in the White House and centers in the departments of Labor, Health and Human Services (HHS), Housing and Urban Development (HUD), Education (ED), Justice (DOJ). President Bush charged the Cabinet centers with identifying statutory, regulatory, and bureaucratic barriers that stand in the way of effective faith-based and community initiatives, and to ensure, consistent with the law, that these organizations have equal opportunity to compete for federal funding and other support.

These solicitations reflect the outcome of discussions between the Department's Center for Faith-Based and Community-Based Initiatives (CFBCI) and ETA to provide expanded opportunities for the Federal-State-local partnerships under WIA to engage the faith-based and community-based organizations in service delivery, while providing additional points of entry for customers into the One-Stop system. These solicitations also reflect the Administration's interest in creating new avenues through which qualified grass-roots organizations can more fully participate under the Workforce Investment Act while bringing their particular strengths and talents in service provision to our customers.

These solicitations also proceed from an ETA–CFBCI mutual premise: the involvement of community-based organizations and faith-based organizations can complement and supplement the efforts of local workforce development systems in providing universal access and serving the training-, job- and career-support needs of many of our customers. Success in the implementation of the Workforce Investment Act is clearly derived from the power of partnerships. Many community-based organizations have fully participated with distinction as direct recipients or as sub-recipients of Federal resources under the Comprehensive Employment and Training Act (CETA) , the Job Training Partnership Act (JTPA) and are currently doing so under WIA. These solicitations are designed to bring other community-based organizations to the decision-making and service delivery mechanisms under WIA.

Faith-based and community-based organizations present credentials for full partnership in our mutual system-building endeavors. FBOs/CBOs are often trusted institutions within our poorest neighborhood, serving the very hardest-to-reach constituents in a cost-effective manner. FBOs/CBOs are home to a large number of volunteers who not only bring the transformational power of personal relationships to the provision of social service but a sustained allegiance to the well-being of their participants they serve. Through their daily work and specific programs, FBOs/CBOs strive to achieve some common purposes shared with government—reduction of welfare dependency, attainment of occupational skills, entry and retention of all our citizens in good-paying jobs. With appropriate planning, the FBO/CBO programs and resources can be leveraged into the workforce investment strategies already embodied in State and local strategic plans.

These three solicitations represent an important element of an overall strategy for outreach to the people served by our nation's community-based organizations and faith-based organizations. A Training and Employment Guidance Letter (TEGL) will be issued in April 2002 to state workforce agencies, worker adjustment liaisons, workforce liaisons, and One-Stop Center system leads. The TEGL will request these principals to commit to a full engagement with faith-based and community-based organizations. The TEGL will encourage local workforce boards to appoint member(s) who are familiar with the FBOs/CBOs that provide job training, soft skills training and employment services in the labor market, and work in conjunction with the state workforce agency's faith-based liaison to share ideas and collect promising practices. The TEGL also will ask the state principals to collaborate with the local workforce investment areas in creating a campaign to educate the appropriate FBOs/CBOs about the workforce investment system, One-Stop Centers, available grants-in-aid, and to invite their participation.

A total of $500,000 is reserved for from small private non-profit organizations to provide authorized services to WIA participants. ETA expects to award approximately 20 to 25 grants under this competition.

The provided services would supplement the services that local One-Stop delivery systems currently provide. The recipient organizations receiving grant funds will partner with the local Workforce Investment Boards and One-Stop operators to carry out various services of direct benefit to customers. The sub-grantees could offer, for example, ''soft-skills'' training such as communications, problem-solving, and time management which will allow the individual to function in an employment environment Other sub-grantee activities can include GED tutoring of at-risk youth, after school programs for youth, day care for elders, job loss counseling, language translation services, ''community audits'' (a resource guide to support services within the community), and ''cultural sensitivity'' training programs.

A total of $5.0 million is reserved for grants for eligible intermediary organizations. ETA expects to award between 5 to 8 grants, with the awards ranging between $500,000 and $1,000,000. ETA will set the amount for each grant after reviewing the proposed activities, and evaluating the ability of each applicant on a State and multi-State basis to achieve the desired system-building objectives. Some intermediary grant recipients, therefore, may be authorized to proceed with a portion—but not the entirety—of their presented project plan.

Under this competition, eligible ''intermediaries'' include those non-profit, community, and/or faith-based organizations with connections to grassroots faith-based and community organizations with the ability to connect those organizations to the nation's workforce development system in more than one service area. The eligible intermediary does not have to be located in more than one jurisdiction as long as their reach extends beyond one jurisdiction, and the application addresses providing services in more than one jurisdiction.

The selected intermediaries under this competition will develop necessary infrastructure, perform outreach and recruitment of community-based and faith-based organizations, conduct information dissemination campaigns, and engage in capacity-building efforts to establish and strengthen the administrative potential of grassroots organizations to receive future grants. These intermediaries will award and manage sub-grants to FBOs/CBOs for service provision in local workforce development areas.

Under this award, the intermediary may issue a sub-grant to a grassroots organization which

(a) Is headquartered in the local community to which it provides services; and,

(i) Has a social services budget of $300,000 or less, or

(ii) Has 6 or fewer full-time equivalent employees.

The ''$300,000 or less'' budget includes only that portion of an organization's budget allocated to providing social services. It does not include other portions of the budget such as salaries and expenses. For purposes of this announcement local affiliates of national organizations are not considered ''grassroots'' and would not be eligible for a sub-grant award.

The Establishment Clause of the First Amendment of the United States Constitution prohibits the government from directly funding religious activity. These grants may not be used for instruction in religion or sacred literature, worship, prayer, proselytizing or other inherently religious practices. The services provided under these grants must be secular and non-ideological. Grant or sub-grant recipients, therefore, may not and will not be defined by reference to religion. Neutral, secular criteria that neither favor nor disfavor religion must be employed in their selection. In addition, under the WIA and DOL regulations implementing the Workforce Investment Act, a recipient may not employ or train a participant in sectarian activities, or permit participants to construct, operate, or maintain any part of a facility that is primarily used or devoted to sectarian instruction or worship. Under WIA, no individual shall be excluded from participation in, denied the benefits of, subjected to discrimination under, or denied employment in the administration of or in connection with, any such program or activity because of race, color, religion, sex (except as otherwise permitted under title IX of the

Education Amendments of 1972), national origin, age, disability, or political affiliation or belief.

Through these grants, the Department expects to assist the State, local partners and new intermediaries in reaching out to additional customers who would otherwise not be served by the publicly-funded workforce development system. The Department views these investments as instrumental in supporting and broadening partnerships which will strengthen One-Stop service delivery.

These grants are made under the following authorities:

- The Workforce Investment Act of 1998 (WIA or the Act) (Public Law 105–220, 29 U.S.C. 2801 *et seq.*)
- WIA Final Rule, 20 CFR parts 652, 660–671 (65 FR 49294 (August 11, 2000));
- Interim Final Rule implementing the nondiscrimination and equal opportunity provision (section 188) of WIA, 29 CFR part 37 (64 FR 61692 (November 12, 1999));
- Planning Guidance and Instructions for Submission of the Strategic Five-Year State Plan for title I of the Workforce Investment Act of 1998 and the Wagner-Peyser Act (64 FR 9402 (February 25, 1999))
- Final Unified Plan Planning Guidance (65 FR 2464 (January 14, 2000))
- Executive Order 13198; ''Rallying the Armies of Compassion''
- ''Report on a Unlevel Playing Field: Barriers to Participation by Faith-Based and Community Organization in Federal Service Programs''

Period of Performance: The period of performance is one year.

Application of Guidelines

Eligible Applicants

All states, District of Columbia, Puerto Rico, and Virgin Islands are eligible to apply for these grants.

Note: Except as specifically provided, DOL/ETA acceptance of a proposal and an award of federal funds to sponsor any program(s) does not provide a waiver of any grant requirement and/or procedures. For example, the OMB circulars require that an entity's procurement procedures must require that all procurement transactions must be conducted, as practical, to provide open and free competition. If a proposal identifies a specific entity to provide the services, the DOL/ETA's award does not provide the justification or basis to sole-source the procurement, i.e., avoid competition.

Application Process

The application must clearly identify the applicant (or the fiscal agent), the grant recipient (and/or fiscal agent), and its capacity to administer this project. Applicants must submit one copy with an original signature and two additional copies of their proposal. The proposal must contain the Standard Form (SF) 424, Application for Federal Assistance, signed by the Governor or the individual designated in the State Workforce Investment Act Strategic Plan.

The application's Statement of Work must be double-spaced, and on single-sided, numbered pages. A font size of at least twelve (12) pitch is required throughout.

There are three required sections:

Section I—Application for Federal Assistance (SF 424A)
Section II—Statement of Work,
Section III—Budget Information (SF 424B)

ETA will not consider applications that fail to provide complete information in these three sections.

Section I —Application for Federal Assistance (SF 424A)

(See Attachment ''A'')

Section II —Statement of Work (not to exceed 15 pages)

The Statement of Work sets forth a strategic context for the use of these funds, establishes measurable goals for increasing ''organizational'' participation, and documents those sustainable State and local partner actions to more fully serve the clientele and members of community-based and faith-based organizations. The narrative in Section II will be evaluated in accordance with the guidance under ''Review Process and Evaluation Criteria'' contained in this announcement.

Section III —Budget Information (SF–424B)

(See Attachment ''B'')

Note: Administrative Costs

Pursuant to 20 CFR 667.210(b), grantees are advised that there is a 10% limitation on administrative costs on funds administered under this grant. The Grant Officer may, however, approve additional administrative costs, up to a maximum of 15% of the total award amount, for that grantee providing adequate justification. In no event, may administrative costs exceed 15% of the total award amount. The cost of administration shall include those disciplines enumerated in 20 CFR 667.220(b) and (c).

Section IV—Review Process and Evaluation Criteria

(Note: Please follow the evaluation criteria when writing and assembling your proposal.) ETA, CFBCI and other Federal agency staff are expected to serve on the technical panel(s) that will review all applications against the criteria listed below. The panel recommendations are advisory. The ETA grant officer will fully consider the panel recommendations but take into account geographic balance and other factors to ensure the most advantageous award of these funds to accomplish the system-building purposes outlined in the Summary and Statement of Work. The grant officer may consider any information that comes to his or her attention. The grant officer reserves the right to award without further negotiation.

Each application will be evaluated against the following rating criteria.

Strategic Context (10 points)

The State application must relate the investments and activities under this grant to the workforce development vision, goals and objectives reflected in its current WIA Strategic Plan. The application should clearly establish a link between unmet customer service needs and the ability of community-based and faith-based organizations to help bridge those needs. (5 points)

The application in this section and in its entirety should evidence the capability to document successful instances of faith-based and community-based organization involvement (both existing as well as those made possible through this grant). Describe how these examples can be successfully transferred and replicated consistent with the Federal-state-local emphasis on ''promising practices.'' Describe how this investment would fit with other Federally funded initiatives which engage the CBOs/FBOs. (5 points)

Community-Based and Faith-Based ''Organizational'' Involvement (50 points)

Describe State plans to conduct outreach to community-based organizations and faith-based organizations to seek their new (or enlarged) participation in the One-Stop delivery system. Identify the stakeholders and principals in the State and local workforce development systems who will contribute to the outreach and evaluation responsibilities identified in these plans. Summarize the innovative approaches that will be used in working with grassroots organizations to catalogue the full range of community

services that are available for those served by the workforce investment system. (10 points)

Describe the formal State evaluation criteria for measuring the success of engagement with the grass-roots organizations under this grant. Describe how these criteria will be developed through consultation with One-Stop operator(s), State and local board(s). (10 points)

Describe ''leveraging opportunities': i.e., how these grant funds can leverage (and can also be leveraged) with financial and non-financial resources provided by the community-based and faith-based organizations in service of the workforce preparation needs of each community. (10 points)

Outline how State and local governance will ''add the voice'' of community-based and faith-based organizations (individually or within coalitions) in future board-based strategic planning. (10 points)

Describe how the applicant will ensure that signatories to the ''memorandum(a) of understanding'' in each local area of the State are thoroughly briefed on the purposes of the CFBCI/ETA faith- and community-based initiative and the purposes of these grants-in-aid. Describe how local partner suggestions and ideas for further strengthening these CBO and FBO relationships with the workforce development system have been incorporated into this application. (10 points)

Providing ''Universal Access'' to Workforce Investment Act Services (40 points)

Describe how the grant funds will be used to expand the opportunity of individuals served by the community-based organizations and faith-based organizations to learn about and gain access to the services offered by the One-Stop delivery system within the State. Describe plans to sustain the increased access of individuals served by CBOs and FBOs beyond the term of this grant. (20 points)

Describe how customers and the staff who serve them are provided with suitable access to the web-based, State-developed applications and websites which provide valuable information on services, training, jobs, career and the local labor markets as well as those electronic tools contained within America's Labor Market Information System and America's Career Kit (America's Job Bank, America's Career InfoNet, O*NET, and Workforce Tools of the Trade). Describe the training and tutoring support that will be provided on these electronic tools. Summarize how the CBOs/FBOs and the individuals they serve will gain knowledge about the Federal Bonding Program and Work Opportunity Tax Credit programs. (20 points)

Reporting Requirement

The grantee must submit quarterly narrative progress and financial reports. The grantee must also prepare and submit a final report summarizing all accomplishments under the grant. The format of all reports and submission instructions will be contained in the grant document.

Signed in Washington, DC, this 10th day of April, 2002.

James W. Stockton,

Grant Officer.

Appendix A: (SF) 424—Application Form

Appendix B: (Budget Information Form)

BILLING CODE 7536–01–M

APPLICATION FOR FEDERAL ASSISTANCE

APPENDIX "A"

OMB Approval No. 0348-0043

		2. DATE SUBMITTED	Applicant Identifier
1. TYPE OF SUBMISSION: Application ☐ Construction ☐ Non-Construction	Preapplication ☐ Construction ☐ Non-Construction	3. DATE RECEIVED BY STATE	State Application Identifier
		4. DATE RECEIVED BY FEDERAL AGENCY	Federal Identifier

5. APPLICANT INFORMATION

Legal Name:	Organizational Unit:
Address (give city, county, State and zip code):	Name, telephone number and fax number of the person to be contacted on matters involving this application (give area code):

6. EMPLOYER IDENTIFICATION NUMBER (EIN):

☐☐-☐☐☐☐☐☐☐

7. TYPE OF APPLICANT: (enter appropriate letter in box) ☐

A. State
B. County
C. Municipa J . Private University
D. Township
E. Interstate L. Individual
F. Intermunicipal
G. Special District
H Independent School Dist.
I State Controlled Institution of Higher Learning
K Indian Tribe
M. Profit Organization
N. Other (Specify): _____

8. TYPE OF APPLICATION:

☐ New ☐ Continuation ☐ Revision

If Revision, enter appropriate letter(s) in box(es): ☐ ☐

A. Increase Award B. Decrease Award C. Increase Duration
D. Decrease Duration Other (specify):

_____

9. NAME OF FEDERAL AGENCY:

10. CATALOG OF FEDERAL DOMESTIC ASSISTANCE NUMBER:

☐☐-☐☐☐

TITLE:

11. DESCRIPTIVE TITLE OF APPLICANT'S PROJECT:

12. AREAS AFFECTED BY PROJECT (cities, counties, States, etc.):

13. PROPOSED PROJECT:		14. CONGRESSIONAL DISTRICTS OF:	
Start Date	Ending Date	a. Applicant	b. Project

15. ESTIMATED FUNDING:		
a. Federal	$	.00
b. Applicant	$	.00
c. State	$	.00
d. Local	$	.00
e. Other	$	.00
f. Program Income	$	.00
g. TOTAL	$	.00

16. IS APPLICATION SUBJECT TO REVIEW BY STATE EXECUTIVE ORDER 12372 PROCESS?

a. YES. THIS PREAPPLICATION/APPLICATION WAS MADE AVAILABLE TO THE STATE EXECUTIVE ORDER 12372 PROCESS FOR REVIEW ON

DATE _____

b. NO. ☐ PROGRAM IS NOT COVERED BY E.O. 12372

☐ OR PROGRAM HAS NOT BEEN SELECTED BY STATE FOR REVIEW

17. IS THE APPLICANT DELINQUENT ON ANY FEDERAL DEBT?

☐ Yes If "Yes," attach an explanation. ☐ No

18. TO THE BEST OF MY KNOWLEDGE AND BELIEF, ALL DATA IN THIS APPLICATION/PREAPPLICATION ARE TRUE AND CORRECT. THE DOCUMENT HAS BEEN DULY AUTHORIZED BY THE GOVERNING BODY OF THE APPLICANT AND THE APPLICANT WILL COMPLY WITH THE ATTACHED ASSURANCES IF THE ASSISTANCE IS AWARDED.

a. Typed Name of Authorized Representative	b. Title	c. Telephone number
d. Signature of Authorized Representative		e. Date Signed

Previous Editions Not Usable

Standard Form 424 (REV 4-88)
Prescribed by OMB Circular A-102

Authorized for Local Reproduction

INSTRUCTIONS FOR THE SF 424

This is a standard form used by applicants as a required facesheet for preapplications and applications submitted for Federal assistance. It will be used by Federal agencies to obtain applicant certification that States which ave established a review and comment procedure in response to Executive Order 12372 and have selected the program to be included in their process, have been given an opportunity to review the applicant's submission.

Item:	Entry:
1.	Self-explanatory.
2.	Date application submitted to Federal agency (or State if applicable) & applicant's control number (if applicable).
3.	State use only (if applicable)
4.	If this application is to continue or revise an existing award, enter present Federal identifier number. If for a new project, leave blank.
5.	Legal name of applicant, name of primary organizational unit which will undertake this assistance activity, complete address of the applicant, and name and telephone number of the person to contact on matters related to this application.
6.	Enter Employer Identification Number (EIN) as assigned by the Internal Revenue Service.
7.	Enter the appropriate letter in the space provided.
8.	Check appropriate box and enter appropriate letter(s) in the space(s) provided. - "New" means a new assistance award. - "Continuation" means an extension for an additional funding/budget period for a project with a projected completion date. - "Revision" means any change in the Federal Government's financial obligation or contingent liability from an existing obligation.
9.	Name of Federal agency from which assistance is being requested with this application.
10.	Use the Catalog of Federal Domestic Assistance number and title of the program under which assistance is required.
11.	Enter a brief descriptive title of the project. If more than one program is involved, you should append an explanation on a separate sheet. If appropriate (e.g., construction or real property projects), attach a map showing project location. For preapplications, use a separate sheet to provide a summary description of the project.
12.	List only the largest political entities affected (e.g., State, counties, cities.
13.	Self-explanatory.
14.	List the applicant's Congressional District and any District(s) affected by the program or project.
15.	Amount requested or to be contributed during the first funding/budget period by each contributor. Value of in-kind contributions should be included on appropriate lines as applicable. If the action will result in a dollar change to an existing award, indicate only the amount of the change. For decreases, enclose the amounts in parentheses. If both basic and supplemental amounts are included, show breakdown on an attached sheet. For multiple program funding, use totals and show breakdown using same categories as item 15.
16.	Applicants should contact the State Single Point of Contact (SPOC) for Federal Executive Order 12372 to determine whether the application is subject to the State intergovernmental review process.
17.	This question applies to the applicant organization, not the person who signs as the authorized representative. Categories of debt include delinquent audit disallowances, loans and taxes.
18.	To be signed by the authorized representative of the applicant. A copy of the governing body's authorization for you to sign this application as official representative must be on file in the applicant's office. (Certain Federal agencies may require that this authorization be submitted as part of the application.)

PART II - BUDGET INFORMATION

SECTION A - Budget Summary by Categories ***APPENDIX "B"***

	(A)	(B)	(C)
1. Personnel	$		
2. Fringe Benefits (Rate)			
3. Travel			
4. Equipment			
5. Supplies			
6. Contractual			
7. Other			
8. Total, Direct Cost (Lines 1 through 7)			
9. Indirect Cost (Rate %)			
10. Training Cost/Stipends			
11. TOTAL Funds Requested (Lines 8 through 10)			

SECTION B - Cost Sharing/ Match Summary (if appropriate)

	(A)	(B)	(C)
1. Cash Contribution			
2. In-Kind Contribution			
3. TOTAL Cost Sharing / Match (Rate %)			

NOTE: *Use Column A to record funds requested for the initial period of performance (i.e. 12 months, 18 months, etc.); Column B to record changes to Column A (i.e. requests for additional funds or line item changes; and Column C to record the totals (A plus B).*

SECTION A - Budget Summary by Categories

1. **Personnel:** *Show salaries to be paid for project personnel which you are required to provide with W2 forms.*

2. **Fringe Benefits:** *Indicate the rate and amount of fringe benefits.*

3. **Travel:** *Indicate the amount requested for staff travel. Include funds to cover at least one trip to Washington, DC for project director or designee.*

4. **Equipment**: *Indicate the cost of non-expendable personal property that has a useful life of more than one year with a per unit cost of $5,000 or more. Also include a detailed description of equipment to be purchased including price information.*

5. **Supplies:** *Include the cost of consumable supplies and materials to be used during the project period.*

6. **Contractual:** *Show the amount to be used for (1) procurement contracts (except those which belong on other lines such as supplies and equipment); and (2) sub-contracts/grants.*

7. **Other:** *Indicate all direct costs not clearly covered by lines 1 through 6 above, including consultants.*

8. **Total, Direct Costs:** *Add lines 1 through 7.*

9. **Indirect Costs:** *Indicate the rate and amount of indirect costs. Please include a copy of your negotiated Indirect Cost Agreement.*

10. **Training /Stipend Cost:** *(If allowable)*

11. **Total Federal funds Requested:** *Show total of lines 8 through 10.*

SECTION B - Cost Sharing/Matching Summary

Indicate the actual rate and amount of cost sharing/matching when there is a cost sharing/matching requirement. Also include percentage of total project cost and indicate source of cost sharing/matching funds, i.e. other Federal source or other Non-Federal source.

NOTE: PLEASE INCLUDE A DETAILED COST ANALYSIS OF EACH LINE ITEM.

[FR Doc. 02–9260 Filed 4–16–02; 8:45 am]
BILLING CODE 4510–30–C

DEPARTMENT OF LABOR

Employment and Training Administration

[SGA/DFA 02–107]

Grants for Intermediaries

AGENCY: Employment and Training Administration, Department of Labor.

ACTION: Notice of availability of funds and solicitation for grant applications (SGA). This notice contains all of the necessary information and forms needed to apply for grant funding.

SUMMARY: The Employment and Training Administration (ETA), U.S. Department of Labor (DOL) announces the availability of funds under three separate competitions to award grants (1) States, (2) intermediaries, and (3) small private non-profit organizations. Under these competitions, eligible ''intermediaries'' are defined as those non-profit, community, and/or faith-based organizations with connections to grassroots faith-based and community organizations with the ability to connect those organizations to the nation's workforce development system in more than one service area. The eligible intermediary does not have to be located in more than one jurisdiction as long as their reach extends beyond one jurisdiction, and the application addresses providing services in more than one jurisdiction.

These awards have three important objectives:

- Increase the number of faith-based and community-based organizations serving as committed and active partners in the One-Stop delivery system
- Expand the access of faith-based and community-based organizations' clients and customers to the services offered by the nation's One-Stops
- Identify, document, showcase and replicate successful instances of faith- and community-based involvement in our system-building.

ETA has identified $14.9 million from the FY 2001 appropriation for One-Stop/America's Labor Market Information System and $500,000 from funds authorized under Section 171 of the Workforce Investment Act for these system-building objectives. A total of $5.0 million is available for this intermediary competition.

DATES: The closing date for receipt of applications is Friday, May 17, 2002. Applications must be received by 4 p.m. (Eastern Standard Time) at the address below: No exceptions to the mailing and hand-delivery conditions set forth in this notice will be granted. Applications that do not meet the conditions set forth in this notice will not be honored. Telefacsimile (FAX) applications will not be honored. Applicants are advised that the Department's receipt of mail has encountered delays because of mail screening procedures at local post offices.

ADDRESSES: Applications must be mailed to: U.S. Department of Labor, Employment and Training Administration, Division of Federal Assistance, Attention: Denise Roach, Reference: SGA/DFA 02–107, 200 Constitution Avenue, NW., Room S–4203, Washington, DC 20210.

Hand Delivered Proposals. If proposals are hand delivered, they must be received at the designated address by 4 p.m., Eastern Time on Friday, May 17, 2002. All overnight mail will be considered to be hand delivered and must be received at the designated place by the specified closing date and time. Telegraphed, e-mail and/or fax proposals will not be honored. Failure to adhere to the above instructions will be a basis for determination of non-responsive.

Late Proposals. A proposal received at the designated office after the exact time specified for receipt will not be considered unless it is received before the award is made and it:

- Was sent by U.S. Postal Service registered or certified mail not later than the fifth day (5th) calendar day before the closing date specified for receipt of applications (*e.g.* an offer submitted an response to a solicitation requiring receipt of application by the 20th of the month must be mailed by the 15th):
- Was sent by U.S. Postal Service Express Mail Next Day Service, Post Office to Addressee, not later than 5 p.m. at the place of mailing two working days prior to the deadline date specified for receipt of proposals in this SGA. The term ''working days'' excludes weekends and U.S. Federal holidays.

The only acceptable evidence to establish the date of mailing of an application received after the deadline date for the receipt of proposals sent by the U.S. Postal Service registered or certified mail is the U.S. postmark on the envelope or wrapper affixed by the U.S. Postal Service and on the original receipt from the U.S. Postal Service. The term ''post marked'' means a printed, stamped, or otherwise place impression (exclusive of a postage meter machine impression) that is readily identifiable without further action as having been supplied or affixed on the date of mailing by employees of the U.S. Postal Service.

Withdrawal of Applications. Applications may be withdrawn by written notice or telegram (including mailgram) received at any time before an award is made. Application may be withdrawn in person by the applicant or by an authorized representative thereof, if the representative's identify is made known and the representative signs a receipt for the proposal.

FOR FURTHER INFORMATION CONTACT: Questions should be faxed to Denise Roach, Grants Management Specialist, Division of Federal Assistance at (202) 693–2879 (This is not a toll free-number). All inquiries should include the SGA/DFA 02–107 and a contact name, fax and phone number. This solicitation will be also published on the Internet, on the Employment and Training Administration (ETA) home page at *http://www.doleta.gov* and *www.usworkforce.org.* Award notifications will also be announced on these two Web pages.

SUPPLEMENTARY INFORMATION: The Workforce Investment Act of 1998 (WIA) established a comprehensive reform of existing Federal job training programs with amendments impacting service delivery under the Wagner-Peyser Act, Adult Education and Literacy Act, and the Rehabilitation Act. A number of other Federal programs are also identified as required partners in the One-Stop delivery system to provide comprehensive services for all Americans to access the information and resources available that can help in the achievement of their career goals. The intention of the One-Stop system is to establish a network of programs and providers in co-located and integrated settings that are accessible for individuals and businesses alike in approximately 600 workforce investment areas established throughout the nation.

WIA established State and Local Workforce Investment Boards focused on strategic planning, policy development, and oversight of the workforce investment system, and accorded significant authority to the nation's Governors and local chief elected officials to further implement innovative and comprehensive delivery systems. The vision, goals and objectives for workforce development under the WIA decentralized system are fully described in the State strategic plan required under section 112 of the legislation. This State strategic workforce investment plan—and the operational experience gained by all the

partners to date in implementing the WIA-instituted reforms—help identify the important ''unmet needs'' and latent opportunities to expand access to One-Stop by all the population segments within the local labor market.

Through these grants awards, ETA seeks to ensure that an important Workforce Investment Act tenet—universal access to the programs and services offered under WIA—is further rooted in the customer-responsive delivery systems already established by the Governors, local elected officials and local Workforce Investment Boards. Through these grant competitions, ETA also reaffirms its continuing commitment to those customer-focused reforms instituted by State and local governments which help Americans access the tools they need to manage their careers through information and high quality services, and to help U.S. companies find skilled workers.

On January 29, 2001, President George W. Bush issued Executive Order 13198, creating the Office for Faith-Based and Community Initiatives in the White House and centers in the departments of Labor, Health and Human Services (HHS), Housing and Urban Development (HUD), Education (ED), Justice (DOJ). President Bush charged the Cabinet centers with identifying statutory, regulatory, and bureaucratic barriers that stand in the way of effective faith-based and community initiatives, and to ensure, consistent with the law, that these organizations have equal opportunity to compete for federal funding and other support.

These solicitations reflect the outcome of discussions between the Department's Center for Faith-Based and Community-Based Initiatives (CFBCI) and ETA to provide expanded opportunities for the Federal-State-local partnerships under WIA to engage the faith-based and community-based organizations in service delivery, while providing additional points of entry for customers into the One-Stop system. These solicitations also reflect the Administration's interest in creating new avenues through which qualified grass-roots organizations can more fully participate under the Workforce Investment Act while bringing their particular strengths and talents in service provision to our customers.

These solicitations also proceed from an ETA–CFBCI mutual premise: the involvement of community-based organizations and faith-based organizations can complement and supplement the efforts of local workforce development systems in providing universal access and serving the training-, job- and career-support needs of many of our customers. Success in the implementation of the Workforce Investment Act is clearly derived from the power of partnerships. Many community-based organizations have fully participated with distinction as direct recipients or as sub-recipients of Federal resources under the Comprehensive Employment and Training Act (CETA) , the Job Training Partnership Act (JTPA) and are currently doing so under WIA. These solicitations are designed to bring other community-based organizations to the decision-making and service delivery mechanisms under WIA.

Faith-based and community-based organizations present credentials for full partnership in our mutual system-building endeavors. FBOs/CBOs are often trusted institutions within our poorest neighborhood, serving the very hardest-to-reach constituents in a cost-effective manner. FBOs/CBOs are home to a large number of volunteers who not only bring the transformational power of personal relationships to the provision of social service but a sustained allegiance to the well-being of their participants they serve. Through their daily work and specific programs, FBOs/CBOs strive to achieve some common purposes shared with government—reduction of welfare dependency, attainment of occupational skills, entry and retention of all our citizens in good-paying jobs. With appropriate planning, the FBO/CBO programs and resources can be leveraged into the workforce investment strategies already embodied in State and local strategic plans.

These three solicitations represent an important element of an overall strategy for outreach to the people served by our nation's community-based organizations and faith-based organizations. A Training and Employment Guidance Letter (TEGL) will be issued in April 2002 to state workforce agencies, worker adjustment liaisons, workforce liaisons, and One-Stop Center system leads. The TEGL will request these principals to commit to a full engagement with faith-based and community-based organizations. The TEGL will encourage local workforce boards to appoint member(s) who are familiar with the FBOs/CBOs that provide job training, soft skills training and employment services in the labor market, and work in conjunction with the state workforce agency's faith-based liaison to share ideas and collect promising practices. The TEGL also will ask the state principals to collaborate with the local workforce investment areas in creating a campaign to educate the appropriate FBOs/CBOs about the workforce investment system, One-Stop Centers, available grants-in-aid, and to invite their participation.

A total of $9.9 million is reserved for State grants. ETA expects to award 5 to 10 grants under this competition. The selected States under this competition will work toward increasing the number of community- and faith-based organizations as partners in the One-Stop delivery system. These states will seek to increase the access of those served by the community- and faith-based organizations to the many services offered by the One-Stops. The selected States will also share responsibility for identifying, showcasing and replicating successful instances of faith-based and community-based involvement.

A total of $500,000 is reserved for faith-based and community-based organizations to provide authorized services to WIA participants. ETA expects to award approximately 20 to 25 grants under this competition.

The provided services would supplement the services that local One-Stop delivery systems currently provide. The recipient organizations receiving grant funds will partner with the local Workforce Investment Boards and One-Stop operators to carry out various services of direct benefit to customers. The sub-grantees could offer, for example, ''soft-skills'' training such as communications, problem-solving, and time management which will allow the individual to function in an employment environment. Other sub-grantee activities can include GED tutoring of at-risk youth, after school programs for youth, day care for elders, job loss counseling, language translation services, ''community audits'' (a resource guide to support services within the community), and ''cultural sensitivity'' training programs.

These grants are made under the following authorities:

- The Workforce Investment Act of 1998 (WIA or the Act) (Pub. L. 105–220, 29 U.S.C. 2801 et seq.)
- WIA Final Rule, 20 CFR parts 652, 660–671 (65 FR 49294 (August 11, 2000));
- Interim Final Rule implementing the nondiscrimination and equal opportunity provision (section 188) of WIA, 29 CFR part 37 (64 FR 61692 (November 12, 1999));
- Planning Guidance and Instructions for Submission of the Strategic Five-Year State Plan for title I of the Workforce Investment Act of 1998 and the Wagner-Peyser Act (64 FR 9402 (February 25, 1999))

• Final Unified Plan Planning Guidance (65 FR 2464 (January 14, 2000))

• Executive Order 13198; ''Rallying the Armies of Compassion''

• ''Report on a Unlevel Playing Field: Barriers to Participation by Faith-Based and Community Organization in Federal Service Programs''

Period of Performance

The period of performance is one year.

Application Guidelines

Eligible Applicants

For purposes of this competition, ''intermediaries'' are defined as those non-profit, community, and/or faith-based organizations with connections to grassroots faith-based and community organizations with the ability to connect those organizations to the nation's workforce development system in more than one service area. The eligible intermediary does not have to be located in more than one jurisdiction as long as their reach extends beyond one jurisdiction, and the application addresses providing services in more than one jurisdiction.

Note: Except as specifically provided, DOL/ETA acceptance of a proposal and an award of federal funds to sponsor any program(s) does not provide a waiver of any grant requirement and/or procedures. For example, the OMB circulars require that an entity's procurement procedures must require that all procurement transactions must be conducted, as practical, to provide open and free competition. If a proposal identifies a specific entity to provide the services, the DOL/ETA's award does not provide the justification or basis to sole-source the procurement, *i.e.*, avoid competition.

Eligible Sub-grantees and Allowable Activities

For purposes of this announcement, the intermediary may issue a sub-grant to a grassroots organization which

(a) is headquartered in the local community to which it provides services; and,

(i) Has a social services budget of $300,000 or less, or

(ii) Has 6 or fewer full-time equivalent employees.

The ''$300,000 or less'' budget includes only that portion of an organization's budget allocated to providing social services. It does not include other portions of the budget such as salaries and expenses. For purposes of this announcement local affiliates of national organizations are not considered ''grassroots'' and would not be eligible for a sub-grant award.

The Establishment Clause of the First Amendment of the United States Constitution prohibits the government from directly funding religious activity. These grants may not be used for instruction in religion or sacred literature, worship, prayer, proselytizing or other inherently religious practices. The services provided under these grants must be secular and non-ideological. Grant or sub-grant recipients, therefore, may not and will not be defined by reference to religion. Neutral, secular criteria that neither favor nor disfavor religion must be employed in their selection. In addition, under the WIA and DOL regulations implementing the Workforce Investment Act, a recipient may not employ or train a participant in sectarian activities, or permit participants to construct, operate, or maintain any part of a facility that is primarily used or devoted to sectarian instruction or worship. Under WIA, no individual shall be excluded from participation in, denied the benefits of, subjected to discrimination under, or denied employment in the administration of or in connection with, any such program or activity because of race, color, religion, sex (except as otherwise permitted under title IX of the Education Amendments of 1972), national origin, age, disability, or political affiliation or belief.

Application Process

The application must clearly identify the applicant (or the fiscal agent), the grant recipient (and/or fiscal agent), and its capacity to administer this project. Applicants must submit one copy with an original signature and two additional copies of their proposal. The proposal must include the Application for Federal Assistance (SF–424A) signed by the representative authorized by the governing body of the applicant to enter into grant agreement.

This application must be double-spaced, and on single-sided, numbered pages. A font size of at least twelve (12) pitch is required throughout.

There are four required sections: Application for Federal Assistance (SF 424A), Intermediary Description and Project Timeline, Statement of Work, and Budget Information (SF 424B). ETA will not consider applications that fail to provide complete information in these four sections.

Section I—Application for Federal Assistance (SF 424A) (*See* Appendix ''A'')

Section II—Intermediary Description and Project Timeline (2 to 3 pages)

Format requirements for Section II are limited to no more than two to three pages. This section should include:

• The geographic area to be addressed through this grant (enumeration of State, multiple States, or identifiable subset of local workforce investment areas within State(s).

• The names of the local investment workforce areas in the State(s) proposed to be served through the activities of this grant. (A State-by-State listing of local workforce areas may be found at *http://www.nawb.org/asp/wibdir.asp*)

• The constituent members (as appropriate) of this intermediary.

• The primary mission of these constituent members irrespective of participation in the grant proposal, and what political and geographic jurisdictions (e.g., cities, counties, subsections of cities/counties) they serve.

• Written confirmation from the applicant that it will cooperate with all entities receiving funding under the Workforce Investment Act and (as appropriate) and with all other recipients of community-based and faith-based investments under the ETA/OFCBI grant strategy outlined in this announcement.

• A general timeline for all discrete projects and activities to be undertaken under the Statement of Work.

Section III—Statement of Work (not to exceed 12 to 15 pages)

The Statement of Work represents the applicant's plans to meet the system-building objectives through assisting grass-roots organizations in developing grant management expertise and skills to allow a fuller participation in the nation's workforce development system. The Department expects that the intermediary will accomplish these objectives through a series of sub-grants to qualified grass-roots organizations. The intermediary will manage the grants, removing the administrative burden from the smaller organization. The intermediary's staff will provide mentoring and technical assistance to build the smaller organizations' capacity.

The Statement of Work will include:

(1) Prior grants management experience (as described on ''Performance History with Grants Management'' in the ''Review Process and Evaluation Criteria'').

(2) Description of the proposed program (as described in ''Project Plan'' in the ''Review Process and Evaluation Criteria'').

Section IV—Budget Information (SF–424B) (*See* Appendix ''B'')

Note: Administrative Costs: Pursuant to 20 CFR 667.210(b), grantees are advised that there is a 10% limitation on administrative costs on funds administered under this grant. The Grant Officer may, however, approve additional administrative costs, up to a maximum of 15% of the total award amount, for that grantee providing adequate justification. In no event, may administrative costs exceed 15% of the total award amount. The cost of administration shall include those disciplines enumerated in 20 CFR 667.220(b) and (c).

Review Process and Evaluation Criteria

Through this grant (and the other allocation of Federal resources outlined in the Summary), ETA and OFCBI seek:

- A verifiable increase in the participation of community-based organizations and faith-based organizations participating in the nation's decentralized One-Stop delivery system.
- A verifiable increase in the number of community service points from which customers and clients of faith-based and community-based organizations gain access to the information products and services provided through the system.
- An increase in the number of total individuals assisted by the publicly-funded workforce development system, with corresponding improvements in service delivery, grantee and service provider performance, and customer satisfaction.

ETA, CFBCI and other Federal agency staff are expected to serve on the technical panel(s) which will review all applications against the criteria listed below. The panel recommendations are advisory. The ETA grant officer will fully consider the panel recommendations but take into account geographic balance and other factors to ensure the most advantageous award of these funds to accomplish the system-building purposes outlined in the Summary and Statement of Work. The grant officer reserves the right to award without further negotiation.

Section V—Criteria

Performance History With Grants Management (25 points)

The applicant must provide a statement of its performance history with management of resources under governmental grants-in-aid programs. The Department will be evaluating applications based on the scope, strength, and ''record of achievement:'' which will be demonstrated by responses to the following requirements:

Provide the names of the local investment workforce areas in the State(s) proposed to be served through the activities of this grant. (A State-by-State listing of local workforce areas may be found at *http://www.nawb.org/asp/wibdir.asp*). Identify the constituent members (as appropriate) of this intermediary. Describe the primary mission of these constituent members irrespective of participation in the grant proposal, and what political and geographic jurisdictions (e.g., cities, counties, subsections of cities/counties) they serve.

(5 points)

Describe:

Relevant history of the intermediary in managing resources through grant awards from Federal Departments (particularly those from the Departments of Labor, Education, Housing and Urban Development, and Health and Human Services), State governments or units of local governments.

Applicant's history of working with small organizations. (Be sure to include past experience in developing other organization's capacity for social service delivery, competing for grants, and managing grants.)

Information campaigns used and technical assistance provided to other organizations to develop their capacity.

Discuss any recent involvement of the intermediary as a partner or provider in the One-Stop Stop delivery system for employment and training services. Describe any current relationship with the State Workforce Investment Board(s) and/or local Workforce Investment Boards.

(20 points)

Project Plan (75 points)

The Project Plan provides the applicant's ''road-map'' for building infrastructure and a set of working relationships with smaller grass-roots organizations. The Department will be evaluating the scope and quality of the Project Plan against several criteria. Both outreach and the management of the sub-grant process are critical to the project plan. The narrative, therefore, should offer the applicant's strategies that meet the requirements listed below.

Describe the steps the intermediary will undertake to take advantage of the partnership and participation opportunities offered by WIA.

(15 points)

Describe the methodology for identification of grassroots organizations that will be eligible for sub-grant awards. Describe the outreach strategies that will support this identification. Define the criteria and methodology for awarding sub-grants to the identified grassroots FBOs/CBOs. (The sub-grant award schedule should be consistent with the project timeline contained in Section II).

(15 points)

Outline the plans for the intermediary's sub-grant management, technical assistance and mentoring. Describe the capacity-building efforts to be undertaken through these resources to establish (or strengthen) the existing administrative potential of grassroots organizations to receive future grants or sub-grants from State and local workforce investment principals.

(30 points)

Describe ''methods of evaluation'' to determine the success of the mentoring and technical assistance efforts with its sub-grantees. Summarize the documentation strategies for the activities undertaken during the life of the grant for ETA and CFBCI use in working with other intermediaries.

(15 points)

Reporting Requirement

The grantee must submit quarterly narrative progress and financial reports. The grantee must also prepare and submit a final report summarizing all accomplishments under the grant. The format of all reports and submission instructions will be contained in the grant document.

Signed in Washington, DC, this 10th of April, 2002.

James W. Stockton,

Grant Officer.

Appendix A: (SF) 424—Application Form

Appendix B: Budget Information Form

BILLING CODE 4510–30–C

APPLICATION FOR FEDERAL ASSISTANCE

APPENDIX "A"

OMB Approval No. 0348-0043

		2. DATE SUBMITTED	Applicant Identifier
1. TYPE OF SUBMISSION: Application ☐ Construction ☐ Non-Construction	Preapplication ☐ Construction ☐ Non-Construction	3. DATE RECEIVED BY STATE	State Application Identifier
		4. DATE RECEIVED BY FEDERAL AGENCY	Federal Identifier

5. APPLICANT INFORMATION

Legal Name:	Organizational Unit:
Address (give city, county, State and zip code):	Name, telephone number and fax number of the person to be contacted on matters involving this application (give area code):

6. EMPLOYER IDENTIFICATION NUMBER (EIN):

☐☐-☐☐☐☐☐☐☐

7. TYPE OF APPLICANT: (enter appropriate letter in box) ☐

A. State
B. County
C. Municipa J . Private University
D. Township
E. Interstate L. Individual
F. Intermunicipal
G. Special District
H Independent School Dist.
I State Controlled Institution of Higher Learning
K Indian Tribe
M. Profit Organization
N. Other (Specify): _____

8. TYPE OF APPLICATION:
☐ New ☐ Continuation ☐ Revision

If Revision, enter appropriate letter(s) in box(es): ☐ ☐

A. Increase Award B. Decrease Award C. Increase Duration
D. Decrease Duration Other (specify):

_____

9. NAME OF FEDERAL AGENCY:

10. CATALOG OF FEDERAL DOMESTIC ASSISTANCE NUMBER:

☐☐-☐☐☐

TITLE:

11. DESCRIPTIVE TITLE OF APPLICANT'S PROJECT:

12. AREAS AFFECTED BY PROJECT (cities, counties, States, etc.):

13. PROPOSED PROJECT:		14. CONGRESSIONAL DISTRICTS OF:	
Start Date	Ending Date	a. Applicant	b. Project

15. ESTIMATED FUNDING:		
a. Federal	$	.00
b. Applicant	$	.00
c. State	$	.00
d. Local	$	.00
e. Other	$	.00
f. Program Income	$	.00
g. TOTAL	$	.00

16. IS APPLICATION SUBJECT TO REVIEW BY STATE EXECUTIVE ORDER 12372 PROCESS?

a. YES. THIS PREAPPLICATION/APPLICATION WAS MADE AVAILABLE TO THE STATE EXECUTIVE ORDER 12372 PROCESS FOR REVIEW ON

DATE _____

b. NO. ☐ PROGRAM IS NOT COVERED BY E.O. 12372

☐ OR PROGRAM HAS NOT BEEN SELECTED BY STATE FOR REVIEW

17. IS THE APPLICANT DELINQUENT ON ANY FEDERAL DEBT?

☐ Yes If "Yes," attach an explanation. ☐ No

18. TO THE BEST OF MY KNOWLEDGE AND BELIEF, ALL DATA IN THIS APPLICATION/PREAPPLICATION ARE TRUE AND CORRECT. THE DOCUMENT HAS BEEN DULY AUTHORIZED BY THE GOVERNING BODY OF THE APPLICANT AND THE APPLICANT WILL COMPLY WITH THE ATTACHED ASSURANCES IF THE ASSISTANCE IS AWARDED.

a. Typed Name of Authorized Representative	b. Title	c. Telephone number
d. Signature of Authorized Representative		e. Date Signed

Previous Editions Not Usable

Standard Form 424 (REV 4-88)
Prescribed by OMB Circular A-102

Authorized for Local Reproduction

INSTRUCTIONS FOR THE SF 424

This is a standard form used by applicants as a required facesheet for preapplications and applications submitted for Federal assistance. It will be used by Federal agencies to obtain applicant certification that States which ave established a review and comment procedure in response to Executive Order 12372 and have selected the program to be included in their process, have been given an opportunity to review the applicant's submission.

Item:	Entry:
1.	Self-explanatory.
2.	Date application submitted to Federal agency (or State if applicable) & applicant's control number (if applicable).
3.	State use only (if applicable)
4.	If this application is to continue or revise an existing award, enter present Federal identifier number. If for a new project, leave blank.
5.	Legal name of applicant, name of primary organizational unit which will undertake this assistance activity, complete address of the applicant, and name and telephone number of the person to contact on matters related to this application.
6.	Enter Employer Identification Number (EIN) as assigned by the Internal Revenue Service.
7.	Enter the appropriate letter in the space provided.
8.	Check appropriate box and enter appropriate letter(s) in the space(s) provided. - "New" means a new assistance award. - "Continuation" means an extension for an additional funding/budget period for a project with a projected completion date. - "Revision" means any change in the Federal Government's financial obligation or contingent liability from an existing obligation.
9.	Name of Federal agency from which assistance is being requested with this application.
10.	Use the Catalog of Federal Domestic Assistance number and title of the program under which assistance is required.
11.	Enter a brief descriptive title of the project. If more than one program is involved, you should append an explanation on a separate sheet. If appropriate (e.g., construction or real property projects), attach a map showing project location. For preapplications, use a separate sheet to provide a summary description of the project.
12.	List only the largest political entities affected (e.g., State, counties, cities.
13.	Self-explanatory.
14.	List the applicant's Congressional District and any District(s) affected by the program or project.
15.	Amount requested or to be contributed during the first funding/budget period by each contributor. Value of in-kind contributions should be included on appropriate lines as applicable. If the action will result in a dollar change to an existing award, indicate only the amount of the change. For decreases, enclose the amounts in parentheses. If both basic and supplemental amounts are included, show breakdown on an attached sheet. For multiple program funding, use totals and show breakdown using same categories as item 15.
16.	Applicants should contact the State Single Point of Contact (SPOC) for Federal Executive Order 12372 to determine whether the application is subject to the State intergovernmental review process.
17.	This question applies to the applicant organization, not the person who signs as the authorized representative. Categories of debt include delinquent audit disallowances, loans and taxes.
18.	To be signed by the authorized representative of the applicant. A copy of the governing body's authorization for you to sign this application as official representative must be on file in the applicant's office. (Certain Federal agencies may require that this authorization be submitted as part of the application.)

PART II - BUDGET INFORMATION

SECTION A - Budget Summary by Categories ***APPENDIX "B"***

	(A)	(B)	(C)
1. Personnel	$		
2. Fringe Benefits (Rate)			
3. Travel			
4. Equipment			
5. Supplies			
6. Contractual			
7. Other			
8. Total, Direct Cost (Lines 1 through 7)			
9. Indirect Cost (Rate %)			
10. Training Cost/Stipends			
11. TOTAL Funds Requested (Lines 8 through 10)			

SECTION B - Cost Sharing/ Match Summary (if appropriate)

	(A)	(B)	(C)
1. Cash Contribution			
2. In-Kind Contribution			
3. TOTAL Cost Sharing / Match (Rate %)			

NOTE: *Use Column A to record funds requested for the initial period of performance (i.e. 12 months, 18 months, etc.); Column B to record changes to Column A (i.e. requests for additional funds or line item changes; and Column C to record the totals (A plus B).*

SECTION A - Budget Summary by Categories

1. **Personnel:** *Show salaries to be paid for project personnel which you are required to provide with W2 forms.*

2. **Fringe Benefits:** *Indicate the rate and amount of fringe benefits.*

3. **Travel:** *Indicate the amount requested for staff travel. Include funds to cover at least one trip to Washington, DC for project director or designee.*

4. **Equipment**: *Indicate the cost of non-expendable personal property that has a useful life of more than one year with a per unit cost of $5,000 or more. Also include a detailed description of equipment to be purchased including price information.*

5. **Supplies:** *Include the cost of consumable supplies and materials to be used during the project period.*

6. **Contractual:** *Show the amount to be used for (1) procurement contracts (except those which belong on other lines such as supplies and equipment); and (2) sub-contracts/grants.*

7. **Other:** *Indicate all direct costs not clearly covered by lines 1 through 6 above, including consultants.*

8. **Total, Direct Costs:** *Add lines 1 through 7.*

9. **Indirect Costs:** *Indicate the rate and amount of indirect costs. Please include a copy of your negotiated Indirect Cost Agreement.*

10. **Training /Stipend Cost:** *(If allowable)*

11. **Total Federal funds Requested:** *Show total of lines 8 through 10.*

SECTION B - Cost Sharing/Matching Summary

Indicate the actual rate and amount of cost sharing/matching when there is a cost sharing/matching requirement. Also include percentage of total project cost and indicate source of cost sharing/matching funds, i.e. other Federal source or other Non-Federal source.

NOTE: PLEASE INCLUDE A DETAILED COST ANALYSIS OF EACH LINE ITEM.

[FR Doc. 02–9261 Filed 4–16–02; 8:45 am]

BILLING CODE 4510–30–C

DEPARTMENT OF LABOR

Employment and Training Administration

[NAFTA–5467]

Commercial Warehouse and Cartage, Inc., El Paso, Texas; Notice of Revised Determination on Reconsideration

By application of January 25, 2002, the company, requested administrative reconsideration of the Department's denial regarding eligibility to Apply for North American Free Trade Agreement-Transitional Adjustment Assistance (NAFTA–TAA), applicable to workers and former workers of the subject firm. The denial notice was issued on December 21, 2001 and published in the **Federal Register** on January 11, 2002 (67 FR 1510).

Workers were engaged in employment related to the production of surgical blankets. That worker group is separately identifiable from other functions performed at the subject plant.

The workers were denied NAFTA–TAA on the basis that there was no shift in production to Mexico or Canada, nor did imports from Canada or Mexico contribute importantly to workers' separations.

The company in their request for administrative reconsideration indicated that the subject plant production of surgical blankets was shifted to Mexico.

Upon further clarification from the company, it became clear that the subject firm did not shift company production to Mexico. However, it became apparent that the subject firm's major customer who owned the machinery at the subject plant shifted production that was produced at the subject plant to an affiliated plant located in Juarez, Mexico. The customer was contacted and confirmed that the production of surgical blankets which was performed at the subject firm was in fact being produced at an affiliated facility plant located in Juarez, Mexico. That facility produced the same product (surgical blankets) as the subject firm prior to the closure of the subject firm and that the Mexican facility has been importing all production of surgical blankets to the United States to be sold to domestic and foreign customers. The customer further reported that they increased their reliance on imported surgical blankets from Mexico during the relevant period of the investigation.

Conclusion

After careful review of the facts obtained in the investigation, I conclude that there was an increase in imports from Mexico of surgical blankets that are like or directly competitive with those produced by the subject firm. In accordance with the provisions of the Trade Act, I make the following certification:

''All workers of Commercial Warehouse and Cartage, Inc., El Paso, Texas engaged in activities related to the production of surgical blankets, who became totally or partially separated from employment on or after October 24, 2000, through two years from the date of certification, are eligible to apply for NAFTA–TAA under section 250 of the Trade Act of 1974.''

Signed at Washington, DC this 29th day of March 2002.

Edward A. Tomchick,

Director, Division of Trade Adjustment Assistance.

[FR Doc. 02–9343 Filed 4–16–02; 8:45 am]

BILLING CODE 4510–30–M

NATIONAL FOUNDATION ON THE ARTS AND THE HUMANITIES

Cooperative Agreement to Create Greater Public Awareness of Universal Design

AGENCY: National Endowment for the Arts.

ACTION: Notification of availability.

SUMMARY: The National Endowment for the Arts is requesting proposals leading to one (1) award of a Cooperative Agreement for a project with the goal of creating greater public awareness of and demand for universal designed environments. The successful proposal should include educational efforts targeted to designers, consumers, and decision makers, and involve collaboration with the targeted audiences, as well as the use of innovative strategies to bring the benefits of universal design into the mainstream. Endowment funding is limited to $75,000. A one-to-one match is required. Those interested in receiving the solicitation package should reference Program Solicitation PS 02–02 in their written request and include two (2) self-addressed labels. Verbal requests for the Solicitation will not be honored. The Program Solicitation will also be posted on the Endowment's Web site at *http://www.arts.gov.*

DATES: Program Solicitation PS 02–02 is scheduled for release approximately May 1, 2002 with proposals due on July 31, 2002.

ADDRESS: Requests for the Solicitation should be addressed to the National Endowment for the Arts, Grants & Contracts Office, Room 618, 1100 Pennsylvania Ave., NW., Washington, DC 20506.

FOR FURTHER INFORMATION CONTACT: William Hummel, Grants & Contracts Office, National Endowment for the Arts, Room 618, 1100 Pennsylvania Ave., NW., Washington, DC 20506 (202/682–5482).

William I. Hummel,

Coordinator, Cooperative Agreements and Contracts.

[FR Doc. 02–9249 Filed 4–16–02; 8:45 am]

BILLING CODE 7536–01–M

SECURITIES AND EXCHANGE COMMISSION

Issuer Delisting; Notice of Application to Withdraw From Listing and Registration on the American Stock Exchange LLC (FBR Asset Investment Corporation, Common Stock, Par Value $.01 Per Share) File No. 1–15049

April 11, 2002.

FBR Asset Investment Corporation, a Virginia corporation (''Issuer''), has filed an application with the Securities and Exchange Commission (''Commission''), pursuant to section 12(d) of the Securities Exchange Act of 1934 (''Act'')[1] and Rule 12d2–2(d) hereunder,[2] to withdraw its Common Stock, par value $.01, per share (''Security''), from listing and registration on the American Stock Exchange LLC (''Amex'' or ''Exchange'').

The Issuer stated in its application that it has met the requirements of Amex Rule l8 by complying with all applicable laws in effect in the State of Virginia, in which it is incorporated, and with the Amex's rules governing an issuer's voluntary withdrawal of a security from listing and registration. The Amex has in turn informed the Issuer that it does not object to the proposed withdrawal of the Issuer's Security from listing and registration on the Exchange.

The Board of Trustees (''Board'') of the Issuer approved a resolution on March 14, 2002 to withdraw the Issuer's Security from listing on the Amex and to list such Security on the New York Stock Exchange, Inc. (''NYSE''), effective April 10, 2002. In making its decision, the Board opined that listing the Security on the NYSE will (i) provide lasting benefits to its

[1] 15 U.S.C. 78*l*(d)

[2] 17 CFR 240.12d2–2(d).

shareholders; (ii) increase visibility to investors; and (iii) provide greater liquidity for the Security.

The Issuer's application relates solely to the withdrawal of the Security from listing and registration on the Amex and shall have no effect upon the Security's continued listing and registration on the NYSE under section 12(b) of the Act.[3]

Any interested person may, on or before May 1, 2002, submit by letter to the Secretary of the Securities and Exchange Commission, 450 Fifth Street, NW, Washington, DC 20549–0609, facts bearing upon whether the application has been made in accordance with the rules of the Amex and what terms, if any, should be imposed by the Commission for the protection of investors. The Commission, based on the information submitted to it, will issue an order granting the application after the date mentioned above, unless the Commission determines to order a hearing on the matter.

For the Commission, by the Division of Market Regulation, pursuant to delegated authority.[4]

Jonathan G. Katz,

Secretary.

[FR Doc. 02–9307 Filed 4–16–02; 8:45 am]

BILLING CODE 8010–01–P

[3] 15 U.S.C. 78*l*(b).

[4] 17 CFR 200.30–3(a)(1).

SECURITIES AND EXCHANGE COMMISSION

[Release No. 35–27516]

Filings Under the Public Utility Holding Company Act of 1935, as Amended ("Act")

April 10, 2001.

Notice is hereby given that the following filing(s) has/have been made with the Commission pursuant to provisions of the Act and rules promulgated under the Act. All interested persons are referred to the application(s) and/or declaration(s) for complete statements of the proposed transaction(s) summarized below. The application(s) and/or declaration(s) and any amendment(s) is/are available for public inspection through the Commission's Branch of Public Reference.

Interested persons wishing to comment or request a hearing on the application(s) and/or declaration(s) should submit their views in writing by May 6, 2002, to the Secretary, Securities and Exchange Commission, Washington, DC 20549–0609, and serve a copy on the relevant applicant(s) and/or declarant(s) at the address(es) specified below. Proof of service (by affidavit or, in the case of an attorney at law, by certificate) should be filed with the request. Any request for hearing should identify specifically the issues of facts or law that are disputed. A person who so requests will be notified of any hearing, if ordered, and will receive a copy of any notice or order issued in the matter. After May 6, 2002, the application(s) and/or declaration(s), as filed or as amended, may be granted and/or permitted to become effective.

Pepco Holdings Inc. et al. (70–9947)

Pepco Holdings Inc. ("PHI"), a company not currently subject to the Act; PHI's parent company, Potomac Electric Power Company ("Pepco"), an electric public utility company; Pepco's direct and indirect nonutility subsidiaries ("Pepco Nonutilities"), all located at 701 Ninth Street, 10th Floor, Suite 1300, Washington, DC 20068; Conectiv, a registered public utility holding company; Conectiv's wholly owned electric and gas public utility subsidiaries, Delmarva Power & Light Company ("Delmarva") and Atlantic City Electric Company ("ACE"); Conectiv Energy Holding Company ("CEH"), a registered holding company subsidiary of Conectiv; CEH's wholly owned electric public utility subsidiaries, Conectiv Delmarva Generation, Inc. ("CDG") and Conectiv Pennsylvania Generation, Inc. ("CPGI"); ACE REIT, Inc. ("ACE REIT"), a registered holding company subsidiary of CEH; ACE REIT's wholly owned electric public utility subsidiary Conectiv Atlantic Generation, LLC ("CAG"); Conectiv Energy Supply, Inc. ("CESI") a nonutility holding company subsidiary of CEH and Conectiv's direct and indirect nonutility subsidiaries ("Conectiv Nonutilities"), all located at 800 King Street, Wilmington, Delaware 19801 (collectively, "Applicants"), have filed a joint application-declaration ("Application") under sections 6(a), 7, 9(a), 10, 12(b), 12(c), 13(b), 32, and 33 of the Act, and rules 42, 43, 45, 46, 52, 53, 54, 90 and 91 under the Act in connection with various proposed transactions.

I. Introduction

In a separate file, Applicants request authority for Conectiv and Pepco to merge and situate PHI as a holding company above them ("Merger").[1] Following the Merger, PHI will register as a holding company under section 5 of the Act. After the Merger is complete, PHI and its subsidiaries ("Subsidiaries," and together with PHI, "PHI System") request authority to engage in various financing through June 30, 2005 ("Authorization Period") including: (i) Issuance by PHI of common stock, preferred stock and preferred stock equivalent securities, long- and short-term debt and guarantees; (ii) issuance of securities by Pepco and Delmarva; (iii) acquisition of up to $1.5 billion of utility assets by the direct and indirect utility subsidiaries of CEH; (iv) issuance by the Conectiv and Pepco Nonutilities (collectively, "Nonutility Subsidiaries") of securities and guarantees; (v) transactions to manage interest rate risk ("Hedging Transactions"); (vi) the formation of a money pool ("Money Pool"); (vii) the formation and issuance of securities by financing entities; (viii) payment of dividends out of capital surplus; (ix) changes in capital stock of wholly owned subsidiaries and (x) investment in exempt wholesale generators ("EWGs"), as defined in section 32 of the Act and foreign utility companies ("FUCOs"), as defined in section 33 of the Act.

[1] *See* HCAR No. 27511 (March 26, 2002) and file number 70–9913.

II. Financing Parameters

The proposed transactions will be subject to the following general terms and conditions ("Financing Parameters"):

- The effective cost of money on long-term debt borrowings will not exceed the greater of (i) 500 basis points over the comparable-term U.S. Treasury securities or (ii) a gross spread over U.S. Treasuries that is consistent with similar securities of comparable credit quality and maturities issued by other companies.
- The effective cost of money on short-term debt borrowings will not exceed the greater of (i) 500 basis points over the comparable-term London Interbank Offered Rate ("LIBOR") or (ii) a gross spread over LIBOR that is consistent with similar securities of comparable credit quality and maturities issued by other companies.
- The dividend rate on any series of preferred securities will not exceed the greater of (i) 500 basis points over the yield to maturity of a U.S. Treasury security having a remaining term equal to the term of the series of preferred securities or (ii) a rate that is consistent with similar securities of comparable credit quality and maturities issued by other companies.
- The maturity of indebtedness will not exceed fifty years. Preferred securities may not have any mandatory redemption provisions.

I. External Financings

A. PHI

Applicants request authority for PHI to issue equity, preferred securities and debt securities in an aggregate amount not to exceed $3.5 billion outstanding at any time through the Authorization Period (''External Limit''). Applicants seek authority for PHI to issue short-term debt securities in an aggregate amount not to exceed $2.5 billion (''Short-Term Limit''). Any short-term debt issued through the Authorization Period will count against the External Limit. In addition, Applicants request authority for PHI to issue up to twenty million shares of common stock or options to purchase shares under stock purchase/dividend reinvestment plans and stock-based management incentive and employee benefit plans (''Common Stock Plan Limit'').

1. General

Applicants request authority for PHI to issue common stock in an aggregate amount outstanding not to exceed the External Limit at any time during the Authorization Period. Specifically, Applicants propose that PHI issue and sell common stock, options, warrants or other stock purchase rights exercisable for common stock. Common stock issuances may be through (i) underwriting agreements of a type generally standard in the industry; (ii) negotiation with underwriters, dealers or agents; (iii) competitive bidding among underwriters; (iv) private placements or other non-public offerings to one or more persons; (v) directly to employees through employee benefit plans (or to trusts established for their benefit) or (vi) directly to shareholders and others through PHI's stock purchase/dividend reinvestment plans and stock-based management incentive. All common stock sales will be at rates or prices, and under conditions negotiated, based upon, or otherwise determined by, competitive capital markets. Underwriters may resell common stock from time to time in one or more transactions, including negotiated transactions, at a fixed public offering price or at varying prices determined at the time of sale. PHI also may grant underwriters a ''green shoe'' option permitting common stock to be offered solely for the purpose of covering over-allotments.

Applicants also propose that PHI issue common stock or options, warrants, or other stock purchase rights exercisable for common stock in public or privately negotiated transactions as consideration for the equity securities or assets of other companies, provided that the acquisition of any equity securities or assets has been authorized in this proceeding or a separate proceeding, or is exempt under the Act or rules under the Act.

2. Stock Based Management and Employee Benefit Plans

Applicants request authority for PHI to establish a stock purchase/dividend reinvestment plan that is expected to incorporate the existing features of the plans currently offered by Pepco and Conectiv. Upon consummation of the Merger, the stock purchase/dividend reinvestment plans of Pepco and Conectiv will be terminated (or one company's plan will be adopted by PHI) and participants will be eligible to become participants in PHI's new or adopted plan. Applicants propose that PHI, from time to time during the Authorization Period, issue and/or acquire in open market transactions, or other acceptable method, shares of common stock under stock-based management incentive and employee benefit plans and under a stock purchase/dividend reinvestment plan in an amount not to exceed the Common Stock Plan Limit.

PHI common stock issued to participants in the existing Pepco and Conectiv plans at the time of the Merger will not be included in the calculation of the Common Stock Plan Limit. PHI common stock issued on an ongoing basis to participants in the PHI stock purchase/dividend reinvestment plan will not be included in the calculation of the External Limit.

3. Preferred Securities

Applicants also request authority for PHI to issue preferred securities (including its authorized preferred stock, trust preferred securities or monthly income preferred securities) directly or indirectly through one or more financing subsidiaries. Preferred securities may be convertible or exchangeable into shares of PHI common stock or unsecured indebtedness. Preferred securities may be sold directly through underwriters or dealers in connection with an acquisition in a manner similar to that described for common stock above.

4. Long-Term Debt

Applicants propose that PHI issue unsecured long-term debt securities that may include, but not be limited to, medium-term notes or debentures, under one or more indentures or long-term indebtedness under agreements with banks or other institutional lenders. Any long-term debt security would have a designated aggregate principal amount, maturity, interest rate or methods of determining the same, terms of payment of interest, redemption provisions, sinking fund terms and other terms and conditions as PHI may determine at the time of issuance. Any long-term debt: (i) May be convertible into any other authorized securities of PHI; (ii) will have maturities ranging from one to fifty years; (iii) may be subject to optional and/or mandatory redemption, in whole or in part, at par or at various premiums above the principal amount; (iv) may be entitled to mandatory or optional sinking-fund provisions; (v) may provide for reset of the coupon pursuant to a remarketing arrangement; (vi) may be subject to tender or the obligation of the issuer to repurchase at the election of the holder or upon the occurrence of a specified event; (vii) may be called from existing investors by a third party or (viii) may be entitled to the benefit of financial or other covenants.

Specific terms of any borrowings, such as maturity dates, interest rates, redemption and sinking fund provisions, tender or repurchase and conversion features, if any, with respect to the long-term securities of a particular series, will be determined by PHI at the time of issuance and will comply in all regards with the Financing Parameters. Associated placement, underwriting or selling agent fees, commissions and discounts, if any, will be established by negotiation or competitive bidding.

5. Short-Term Debt

Applicants seek authority for PHI to issue short-term debt in an aggregate amount not to exceed the Short-Term Debt Limit. Short-term debt may include (i) borrowings under one or more revolving credit facilities or bank loans; (ii) commercial paper; (iii) short-term notes and (iv) bid notes. Specific terms of any short-term borrowings will be determined by PHI at the time of issuance and will comply in all regards with the Financing Parameters. If the notional maturity of short-term debt is greater than 364 days, the debt security will include put options at appropriate points in time to cause the security to be accounted for as a current liability under United States generally accepted accounting principles (''GAAP''). Applicants propose that PHI issue other types of short-term debt securities generally available in the credit markets, money markets or capital markets, whose specific terms, in all cases, will comply in all regards with the Financing Parameters. Applicants state that all short-term debt issued by PHI will be unsecured.

Applicants request authority for PHI to sell commercial paper, from time to time, in established domestic or European commercial paper markets. Commercial paper would be sold directly to investors or sold to dealers at the discount rate or the coupon rate per annum prevailing at the date of issuance for commercial paper of comparable quality and maturities. It is expected that the dealers acquiring commercial paper from PHI will reoffer this paper at a discount to corporate, institutional and, with respect to European commercial paper, individual investors. Institutional investors are expected to include commercial banks, insurance companies, pension funds, investment trusts, foundations, colleges and universities and finance companies.

Applicants propose that PHI sell short-term notes through one or more private placements or public offerings primarily to traditional money market investors. Specific terms of any borrowings will be determined by PHI at the time of issuance and will comply in all regards with the Financing Parameters.

PHI proposes to enter into individual agreements (''Bid Note Agreements'') with one or more commercial banks that may be lenders under PHI credit facilities. The Bid Note Agreements would permit PHI to negotiate with one or more banks (''Bid Note Lenders'') on any given day for the Bid Note Lender, or any affiliate or subsidiary of the lender, to purchase promissory notes directly from PHI.

6. Guarantees

Applicants request authority for PHI to issue guarantees (''PHI Guarantees''), to third parties, obtain letters of credit, enter into support or expense agreements, or otherwise provide credit support with respect to the obligations of Subsidiaries, as may be appropriate in the ordinary course of their respective businesses, and to enter into guarantees of non-affiliated third parties' obligations in the ordinary course of PHI's business in an aggregate amount not to exceed $3.5 billion (''PHI Guarantee Limit'').

A portion of the PHI Guarantees may be in connection with the business of CESI or Pepco Energy Services, Inc. (''PES''), both wholly owned indirect subsidiaries of PHI. CESI conducts power marketing and trading operations and PES provides energy efficiency contracting, building and systems operation and maintenance, as well as conducting gas and electric marketing. In addition, PHI may wish to provide credit support in connection with the trading positions of CESI and PES entered into in the ordinary course of CESI's and PES's energy marketing and trading businesses. PHI may also provide credit support for PES' construction obligations entered into in the ordinary course of PES's energy contracting business. The portion of the PHI Guarantee Limit to be used on behalf of the trading activities of CESI and PES allows only for a modest increase over the Authorization Period.

Certain of the PHI Guarantees may be in support of obligations that are not capable of exact quantification. In these cases, PHI will determine the exposure under a guarantee for purposes of measuring compliance with the PHI Guarantee Limit by appropriate means, including estimation of exposure based on loss experience or potential payment amounts. PHI proposes to charge each Subsidiary a fee for any guarantee provided on its behalf that is not greater than the cost, if any, of obtaining the liquidity necessary to perform the guarantee for the period of time the guarantee remains outstanding.

7. Risk Management

Applicants request authority for PHI to enter into, perform, purchase and sell financial instruments intended to reduce or manage the volatility of interest rates, including but not limited to, interest rate swaps, caps, floors, collars and forward agreements or any other similar agreements. Hedges may also include the issuance of structured notes (*i.e.,* a debt instrument in which the principal and/or interest payments are indirectly linked to the value of an underlying asset or index), or transactions involving the purchase or sale, including short sales, of U.S. Treasury or agency (*e.g.,* Federal National Mortgage Association) obligations or LIBOR based swap instruments (collectively, ''Hedge Instruments''). Applicants state that the transactions would be for fixed periods and stated notional amounts. PHI would employ interest rate derivatives as a means of prudently managing the risk associated with any of its outstanding debt issued under this authorization or under an applicable exemption by, in effect, synthetically (i) converting variable-rate debt to fixed-rate debt; (ii) converting fixed-rate debt to variable-rate debt and (iii) limiting the impact of changes in interest rates resulting from variable-rate debt. In no case will the notional principal amount of any interest rate swap exceed that of the underlying debt instrument and related interest rate exposure. Applicants state that they will not engage in any speculative transactions. Applicants state that transactions will be entered into for a fixed or determinable period. PHI will only enter into agreements with counterparties whose senior debt ratings, as published by a nationally recognized rating agency are greater than or equal to ''BBB,'' or an equivalent rating (''Approved Counterparties'').

In addition, Applicants request authority for PHI to enter into interest rate Hedging Transactions with respect to anticipated debt offerings (''Anticipatory Hedges''), subject to certain limitations and restrictions. These Anticipatory Hedges would only be entered into with Approved Counterparties, and would be utilized to fix and/or limit the interest rate risk associated with any new issuance through (i) a forward sale of exchange-traded Hedge Instruments (''Forward Sale''); (ii) the purchase of put options on Hedge Instruments (''Put Options Purchase''); (iii) a Put Options Purchase in combination with the sale of call options Hedge Instruments (''Zero Cost Collar''); (iv) transactions involving the purchase or sale, including short sales, of Hedge Instruments or (v) some combination of a Forward Sale, Put Options Purchase, Zero Cost Collar and/or other derivative or cash transactions, including, but not limited to, structured notes, caps and collars, appropriate for the Anticipatory Hedges. Anticipatory Hedges may be executed on-exchange (''On-Exchange Trades'') with brokers through the opening of futures and/or options positions traded on the Chicago Board of Trade, the opening of over-the-counter positions with one or more counterparties (''Off-Exchange Trades''), or a combination of On-Exchange Trades and Off-Exchange Trades. PHI will determine the optimal structure of each Anticipatory Hedge transaction at the time of execution. PHI may decide to lock in interest rates and/or limit its exposure to interest rate increases.

B. Pepco and Delmarva External Financing

In addition to the following requests for financing authority, Applicants request authority for Pepco to maintain its existing financing arrangements described in exhibit K–1 to the Application.

1. Short-Term Debt

Applicants request authority for Pepco and Delmarva to issue short-term debt securities in aggregate amounts not to exceed $300 million and $275 million for Pepco and Delmarva, respectively, outstanding at any one time during the Authorization Period. Applicants request authority for Pepco and Delmarva to issue the same type of short-term debt securities with the same

financing parameters as requested for PHI in section III.A.5, above.

2. Long-Term Debt and Preferred Securities

Applicants request authority for Pepco to issue an aggregate of up to $800 million in long-term debt securities and preferred securities during the Authorization Period. Applicants propose that Pepco will issue the same types of long-term debt securities and preferred securities under the same terms as requested for PHI in III.A.4, above, except that Pepco may issue secured as well as unsecured debt securities. It is anticipated that any secured long-term debt issued by Pepco will be under a Mortgage and Deed of Trust Dated July 1, 1936, as amended and supplemented, between Potomac Electric Power Company and The Bank of New York, as Successor Trustee to Riggs National Bank of Washington, D.C. However, Pepco may enter into other similar secured financing arrangements, such as a new mortgage indenture, a fallaway indenture, pursuant to which Pepco would issue debt securities that would be secured by a new series of mortgage bonds until such time as its mortgage indenture was terminated or it secured financing agreements with banks or institutional lenders (*i.e.,* accounts receivable financing or a sale/leaseback of utility property not subject to the mortgage lien). Unsecured long-term debt securities that Pepco may issue, include, but are not limited to, notes, medium-term notes or debentures, under one or more indentures or long-term indebtedness under agreements with banks or other institutional lenders.

3. Guarantees

Applicants request authority for Pepco to enter into guarantees (''Pepco Guarantees'') under the same conditions as requested for the PHI Guarantees. The Pepco Guarantees will count against the PHI Guarantee Limit, exclusive of any guarantees and other forms of credit support that are exempt under rule 45(b) and rule 52(b); provided however, that the amount of Nonutility Guarantees in respect of obligations of any subsidiaries acquired under rule 58 (''Rule 58 Subsidiaries'') shall remain subject to the limitation of rule 58(a)(1). Applicants state that certain of the guarantees may be in support of obligations that are not capable of exact quantification. In these cases, Pepco will determine the exposure under a guarantee for purposes of measuring compliance with the PHI Guarantee Limit by appropriate means including estimation of exposure based on loss experience or potential payment amounts. Applicants request authority for Pepco to charge its associate company a fee for each guarantee provided on its behalf determined in the same manner as specified above for guarantees issued by PHI.

4. Risk Management

Applicants request authority for Pepco and Delmarva to enter into, perform, purchase and sell Hedge Instruments and Anticipatory Hedges according to the same limitations and requirements applicable to PHI described above, to the extent not exempt under rule 52.

C. CEH

Applicants request authority for CEH, a subsidiary of CEH or a financing entity established by CEH (''collectively, ''CEH Companies'') to fund the generation activities of the CEH Companies during the Authorization Period to issue preferred securities, long-term debt and short-term debt in an aggregate amount not to exceed $1.5 billion outstanding at any time during the Authorization Period (''Genco Limit''). Any issuance of securities by the CEH Companies to unrelated third parties will count towards the PHI Financing Limit, except those issued by associate companies or the PHI System Money Pool. Any then outstanding short-term debt issued by the CEH Companies will be included in the calculation of the PHI Short-Term Debt Limit.

1. Preferred Securities

Applicants request authority for the CEH Companies to issue preferred stock or other types of preferred securities in one or more series with rights, preferences and priorities as may be designated in the instrument creating each series. Dividends or distributions on preferred securities will be made periodically and to the extent funds are legally available for such purpose, but may be made subject to terms that allow the issuer to defer dividend payments for specified periods. Preferred Securities may be sold directly through underwriters or dealers in connection with an acquisition in a manner similar to that described for common stock above.

2. Long-Term Debt

Applicants propose that the CEH Companies issue long-term debt securities including, but not limited to, notes, medium-term notes or debentures under one or more indentures, or long-term indebtedness under agreements with banks or other institutional lenders. Long-term debt may be secured by the CEH Companies' generation assets or unsecured. Any long-term debt security would have a designation of aggregate principal amount, maturity, interest rate(s) or methods of determining the same, terms of payment of interest, redemption provisions, sinking fund terms, and other terms and conditions as the CEH Companies may determine at the time of issuance. Any long-term debt (i) may be convertible into any authorized securities of the CEH Companies; (ii) will have maturities ranging from one to fifty years; (iii) may be subject to optional and/or mandatory redemption, in whole or in part, at par, or at various premiums above the principal amount thereof; (iv) may be entitled to mandatory or optional sinking-fund provisions; (v) may provide for reset of the coupon pursuant to a remarketing arrangement; (vi) may be subject to tender to the issuer for repurchase or be subject to the obligation of the issuer to repurchase at the election of the holder or upon the occurrence of a specified event and (vii) may be called from existing investors by a third party.

Specific terms of any borrowings such as maturity dates, interest rates, redemption and sinking fund provisions, tender, or repurchase and conversion features, if any, with respect to the long-term securities of a particular series, will be determined by the issuer at the time of issuance and will comply in all regards with the parameters for financing authorization set forth above. Associated placement, underwriting, or selling agent fees, commissions and discounts, if any, will be established by negotiation or competitive bidding.

3. Short-Term Debt

Applicants request authority for the CEH Companies to issue the same types of short-term debt securities under the same terms as requested above for PHI. CEH Companies may, without counting against the limits set forth above, maintain back-up lines of credit. Outstanding external short-term debt issued by CEH Companies will be included in the calculation of the PHI Short-Term Debt Limit.

4. Guarantees

Applicants request authority for CEH to enter into guarantees of the obligations of its subsidiaries under the same terms as the PHI Guarantees and for subsidiaries of CEH or financing entities established by CEH to issue guarantees to external lenders in support of their financing activities (collectively, ''CEH Guarantees''). The CEH Guarantees will count towards the

PHI Guarantee Limit, exclusive of any guarantees and other forms of credit support that are exempt under rule 45(b) and rule 52(b). In no event will any CEH Guarantees involve the pledging of any utility property.

A portion of the CEH Guarantees may be issued in connection with the business of CESI, a wholly owned direct subsidiary of CEH. CESI conducts power marketing and trading operations. CEH may wish to provide credit support in connection with the trading positions of CESI entered into in the ordinary course of CESI's energy marketing and trading businesses. The portion of the PHI Guarantee Limit represented by CEH Guarantees allows only for a modest increase in the energy trading activities of CESI.

CEH Guarantees may be in support of obligations that are not capable of exact quantification. In these cases, CEH will determine the exposure under a guarantee for purposes of measuring compliance with the PHI Guarantee Limit by appropriate means, including estimation of exposure based on loss experience or potential payment amounts. CEH may charge each of its subsidiaries a fee for any guarantee provided on its behalf. The fee will not be greater than the cost, if any, of obtaining the liquidity necessary to perform the guarantee for the period of time the guarantee remains outstanding.

5. Financing Risk Management Devices

CEH or a financing subsidiary established by CEH, request authority to enter into, perform, purchase and sell interest rate management devices and Anticipatory Hedges subject to the limitations and requirements applicable to PHI described above in section III.A.7.

6. Utility Property Financing

Conectiv, CAG, CDG and any new utility company established by Conectiv (''New Utility Subsidiary''), are currently authorized to acquire up to $1 billion of utility property. [2] Authorization was granted for (i) Conectiv to fund CEH, (ii) CEH in turn to fund CDG, ACE REIT and any established New Utility Subsidiary and (iii) ACE REIT to fund CAG through the issuance of debt or equity securities to, and the acquisition of those securities by, their respective parent companies in an aggregate amount not to exceed $1 billion. Further, authorization was granted for CAG, CDG and the New Utility Subsidiaries to borrow up to $1 billion (less any debt or equity securities issued to their respective parent companies) from the Conectiv money pool to fund acquisitions of utility property. As of December 31, 2001, no utility property has been acquired under this authorization.

PHI requests that the authorizations previously granted in the Conectiv Financing Orders for CAG, CDG and the New Utility Subsidiaries to acquire and fund up to $1 billion of utility property be consolidated in this file. For purposes of this request, the acquisition of utility property by CAG, CDG, CPGI and the New Utility Subsidiaries (but not Pepco, Delmarva or ACE) would include any newly constructed facilities, any property acquired from unaffiliated third parties and any property acquired from associated companies that are public utility companies or EWGs. Any acquisition of utility property made under the Conectiv Financing Orders will count against the authorization for the acquisition of utility property sought in this Application.

D. Conectiv Financing

1. Existing Financing Arrangements

Applicants request that Conectiv maintain certain financing arrangements in place following the merger. These financing arrangements are more fully described in exhibit K–2 to this Application.

2. Guarantees

Applicants request authority for Conectiv to enter into guarantees of the obligations of its subsidiaries (''Conectiv Guarantees'') under the same terms and conditions as requested for PHI above in section III.A.6. The Conectiv Guarantees will count towards the PHI Guarantee Limit, exclusive of any guarantees and other forms of credit support that are exempt pursuant to rule 45(b) and rule 52(b).

A portion of the Conectiv Guarantees may be in connection with the business of CESI, a wholly owned, indirect subsidiary of Conectiv. CESI conducts power marketing and trading operations. Conectiv may wish to provide credit support in connection with the trading positions of CESI entered into in the ordinary course of CESI's energy marketing and trading businesses. The portion of the PHI Guarantee Limit represented by Conectiv Guarantees allows only for a modest increase in the energy trading activities of CESI.

Certain of the Conectiv Guarantees may be in support of obligations that are not capable of exact quantification. In these cases, Conectiv will determine the exposure under a guarantee for purposes of measuring compliance with the PHI Guarantee Limit by appropriate means, including estimation of exposure based on loss experience or potential payment amounts.

Applicants propose that Conectiv charge each subsidiary a fee for any guarantee provided on its behalf that is not greater than the cost, if any, of obtaining the liquidity necessary to perform the guarantee for the period of time the guarantee remains outstanding.

E. Nonutility Subsidiary Financings

Applicants request that certain Nonutility Subsidiaries maintain financing arrangements currently in place following consummation of the Merger. These financings are more fully described in exhibit K–2 to the Application.

In order to be exempt under rule 52(b), any loans by PHI, CEH or Conectiv to a Nonutility Subsidiary, or by one Nonutility Subsidiary to another, must have interest rates and maturities that are designed to parallel the lending company's effective cost of capital. However, in the limited circumstances where the Nonutility Subsidiary making the borrowing is not wholly owned, directly or indirectly, by PHI, authority is requested for PHI, CEH, Conectiv or a Nonutility Subsidiary, as the case may be, to make loans to those Nonutility Subsidiaries at interest rates and maturities designed to provide a return to the lending company of not less than its effective cost of capital. The Nonutility Subsidiary receiving the loan in this situation will not sell any services to any associate Nonutility Subsidiary unless the transaction is exempt from the ''at cost'' standard by rule or Commission order.

F. Guarantees by Nonutility Subsidiaries

Applicants request authority for the Nonutility Subsidiaries to provide guarantees and other forms of credit support to other Nonutility Subsidiaries (''Nonutility Subsidiary Guarantees''). The Nonutility Subsidiary Guarantees will count against the $3.5 billion PHI Guarantee Limit, along with the PHI Guarantees, Pepco Guarantees, CEH Guarantees and Conectiv Guarantees. Applicants request authorization for a Nonutility Subsidiary providing credit

[2] Conectiv and its subsidiaries currently have various authorizations under orders dated February 26, 1998 (HCAR No. 26833), August 21, 1998 (HCAR No. 26907), September 28, 1998 (HCAR No. 26921), October 21, 1998 (HCAR No. 26930), November 13, 1998 (HCAR No. 26941), December 14, 1999 (HCAR No. 27111), August 17, 2000 (HCAR No. 27213), June 7, 2001 (HCAR No. 27415) and March 22, 2002 (HCAR No. 25707) collectively, ''Conective Financing Orders''). Since it was formed under the authority granted in the Conectiv Financing Orders, CPGI is also a New Utility Subsidiary.

support to charge an associate company a fee for each guarantee provided on its behalf, determined in the same manner as specified above for guarantees issued by PHI.

G. PHI System Money Pool

Applicants request authorization to establish a system Money Pool. Applicants further request authorization for the Subsidiaries to make unsecured short-term borrowings from the Money Pool, to contribute surplus funds to the Money Pool and to lend and extend credit to one another through the Money Pool. Applicants request authority for PHI, Conectiv, CEH and ACE REIT to contribute surplus funds and to lend and extend credit to the Money Pool. Applicants state that no loans through the Money Pool would be made to, and no borrowings through the Money Pool would be made by PHI and Conectiv.[3]

Under the proposed terms of the Money Pool, short-term funds would be available from the following sources for short-term loans to the Subsidiaries from time to time: (i) surplus funds in the treasuries of lenders to the Money Pool (''Internal Funds'') and (ii) proceeds from the issuance of short-term debt securities by lenders to the Money Pool which are loaned to the Money Pool (''External Funds''). Funds would be made available from such sources in such order as the administrator of the Money Pool may determine would result in a lower cost of borrowing, consistent with the individual borrowing needs and financial standing of the companies providing funds to the pool. The determination of whether a Money Pool participant shall lend funds to the Money Pool would be made by the participant's chief financial officer or treasurer, or by a designee thereof, on the basis of cash flow projections and other relevant factors, in the participant's sole discretion. No party would be required to effect a borrowing through the Money Pool if it is determined that it could, and had authority to, effect a borrowing at lower cost directly from other lenders.

The cost of compensating balances, if any, and fees paid to banks to maintain credit lines and accounts by Money Pool participants lending External Funds to the Money Pool would initially be paid by the participant maintaining the line. A portion of the costs, or all of the costs in the event a Money Pool participant establishes a line of credit solely for purposes of lending any External Funds obtained into the Money Pool, would be retroactively allocated every month to the companies borrowing the External Funds through the Money Pool in proportion to their respective daily outstanding borrowings of External Funds.

If only Internal Funds make up the funds available in the Money Pool, the interest rate applicable and payable to or by Subsidiaries for all loans of the Internal Funds will be the rates for high-grade, unsecured thirty day commercial paper sold through dealers by major corporations as quoted in *The Wall Street Journal.*

If only External Funds comprise the funds available in the Money Pool, the interest rate applicable to loans of the External Funds would be equal to the lending company's weighted average of the cost for the External Funds. If more than one Money Pool participant had made available External Funds on a certain day, the applicable interest rate would be a composite rate equal to the weighted average of the cost incurred by the respective Money Pool participants for the External Funds.

In cases where both Internal Funds and External Funds are concurrently borrowed through the Money Pool, the rate applicable to all loans comprised of these ''blended'' funds would be a composite rate equal to the weighted average of the cost of all the External Funds.

Funds not required by the Money Pool to make loans (with the exception of funds required to satisfy the Money Pool's liquidity requirements) would ordinarily be invested in one or more short-term investments, including: (i) Interest-bearing accounts with banks; (ii) obligations issued or guaranteed by the U.S. government and/or its agencies and instrumentalities, including obligations under repurchase agreements; (iii) obligations issued or guaranteed by any state or political subdivision thereof, provided that these obligations are rated not less than ''A'' by a nationally recognized rating agency; (iv) commercial paper rated not less than ''A–1'' or ''P–1'' or their equivalent by a nationally recognized rating agency; (v) money market mutual funds; (vi) bank certificates of deposit; (vii) Eurodollar funds and (viii) other investments as are permitted by section 9(c) of the Act and rule 40 under the Act.

The interest income earned on investments in the Money Pool would be allocated among the participants in the Money Pool in accordance with the weighted average proportion each participant's contribution of funds bears to the total amount of funds in the Money Pool.

Each Subsidiary receiving a loan through the Money Pool would be required to repay the principal amount of the loan, together with all interest accrued, on demand and in any event not later than one year after the date of the loan. All loans made through the Money Pool may be prepaid by the borrower without premium or penalty.

Applicants request authority for Pepco and Delmarva to borrow up to $300 million and $275 million, respectively, at any one time outstanding, from the Money Pool. Any short-term debt borrowed from the Money Pool by Pepco and Delmarva will count against each company's short-term debt authority requested in section III.B.1, above.

H. Intrasystem Financing

Applicants expect that PHI, CEH, Conectiv and the Nonutility Subsidiaries will lend funds, extend credit, make capital contributions and open account advances without interest to Nonutility Subsidiaries. Applicants state that these transactions will typically be exempt under rules 52(b) and 45(b). However, if intrasystem transactions are not exempt under rules 52(b) and 45(b), Applicants request that the company making a loan or extending credit may charge interest at the same effective rate of interest as the daily weighted average effective rate of commercial paper, revolving credit and/or other short-term borrowings currently held by the borrowing company, including an allocated share of commitment fees and related expenses. If the borrowing company has no outstanding borrowings, then the interest rate shall be predicated on the Federal Funds effective rate of interest as quoted daily by the Federal Reserve Bank of New York.

In the limited circumstances where the Nonutility Subsidiary effecting the borrowing is not wholly owned by PHI, CEH, Conectiv, or a Nonutility Subsidiary, directly or indirectly, Applicants request authority for PHI, CEH, Conectiv, or a Nonutility Subsidiary to make loans to these subsidiaries at interest rates and maturities designed to provide a return to the lending company of not less than its effective cost of capital. If such loans

[3] Applicants state that CEH and ACE REIT are temporarily registered as holding companies under the Act due to lack of authorization to designate their subsidiaries' generation assets as EWGs. CEH and ACE REIT currently are authorized to borrow from Conectiv's money pool by order dated June 7, 2001 (HCAR No. 27415) and seek authority to borrow from the Money Pool until the later of a period of one year from the date of the Merger or the receipt of EWG authorization requested in this Application. Applicants further state that CEH and ACE REIT will be deregistered after their respective public utility subsidiaries are certified as EWGs.

are made to a Nonutility Subsidiary, such Nonutility Subsidiary will not provide any services to any associate Nonutility Subsidiary unless such transaction is exempt from the ''at cost'' standard by rule or Commission order.

If these loans are made to a Nonutility Subsidiary, such Nonutility Subsidiary will not provide any services to any associate Nonutility Subsidiary except to a wholly or partially owned subsidiary that meets one of the following conditions: (i) The Nonutility Subsidiary is a FUCO or an EWG that derives no part of its income, directly or indirectly, from the generation and sale of electric energy within the United States; (ii) the Nonutility Subsidiary is an EWG that sells electricity at market-based rates that have been approved by the Federal Energy Regulatory Commission (''FERC'') or the relevant state public utility commission, provided that the purchaser is not one of Pepco Holdings' regulated public utility subsidiaries; (iii) the Nonutility Subsidiary is a ''qualifying facility'' (''QF'') under the Public Utility Regulatory Policies Act of 1978, as amended (''PURPA''), that sells electricity exclusively at rates negotiated at arm's length to one or more industrial or commercial customers purchasing the electricity for their own use and not for resale, or to an electric utility company (other than one of Pepco Holdings' regulated public utility subsidiaries) at the purchaser's ''avoided costs'' as determined under the regulations under PURPA; (iv) the Nonutility Subsidiary is an EWG or QF that sells electricity at rates based upon its cost of service, as approved by the FERC or any state public utility commission having jurisdiction, provided that the purchaser of the electricity is not one of Pepco Holdings' regulated public utility subsidiaries or (v) the Nonutility Subsidiary is engaged solely in the business of developing, owning, operating and/or providing services to a company described in clauses (i)–(iv) above. In the event these loans are made, PHI will include in the next certificate filed under rule 24 substantially the same information as required on form U–6B–2 with respect to the transaction.

I. Financing Subsidiaries

Applicants request authority for PHI and the Subsidiaries to acquire, directly or indirectly, the equity securities of one or more corporations, trusts, partnerships, or other entities (''Financing Subsidiaries'') created specifically for the purpose of facilitating the financing of the authorized and exempt activities (including exempt and authorized acquisitions) of PHI and the Subsidiaries. Applicants request authority for the Financing Subsidiaries to issue short-term debt, long-term debt, preferred securities or equity securities to third parties and transfer the proceeds of these financings to PHI or their respective parent Subsidiaries. If required, Applicants propose that PHI or a Subsidiary, guarantee or enter into support or expense agreements with respect to the obligations of the Financing Subsidiaries. Applicants request authority for each of the Subsidiaries to enter into an expense agreement with its respective Financing Subsidiary, under which it would agree to pay all expenses of the Financing Subsidiary. Any amounts issued by the Financing Subsidiaries to third parties under this authorization will be included in the overall external financing limitation authorized for the immediate parent of the Financing Subsidiary, however, the underlying intrasystem mirror debt and parent guarantee shall not be included.

J. Changes in Capital Stock of Wholly Owned Subsidiaries

The portion of an individual Subsidiary's aggregate financing to be effected through the sale of stock to PHI or another immediate parent company during the Authorization Period cannot be ascertained at this time. It may happen that the proposed sale of capital securities may in some cases exceed the then-authorized capital stock of the Subsidiary. In addition, the Subsidiary may choose to use capital stock with no par value.

Applicants request authority to change the terms of any wholly owned Subsidiary's authorized capital stock capitalization or other equity interests by an amount deemed appropriate by PHI or other intermediate parent company, as needed to accommodate these proposed transactions and to provide for future issues. A Subsidiary would be able to change the par value, or change between par value and no-par stock, without obtaining additional Commission approval. Any action by a Utility Subsidiary (other than CAG, CDG and the New Utility Subsidiaries) would be subject to and would only be taken upon the receipt of any necessary approvals by the state commission in the state or states where the Utility Subsidiary is incorporated and doing business.

K. Investments in EWGs and FUCOs

Conectiv has authorization to invest proceeds of securities issuances in EWGs in amounts not to exceed $350 million (''Conectiv EWG Project Limit''). [4] As of June 30, 2001, Conectiv had investments in EWGs of $156.3 million. Conectiv has no investments in FUCOs. As of June 30, 2001, Conectiv states that it was in compliance with the requirements of the Conectiv Financing Orders as they relate to investments in EWGs.

As of June 30, 2001, Pepco had investments in EWGs of $31.2 million, which consisted of investments in the Benning Road and Buzzard Point power generation plants. As of December 21, 2001, Pepco had investments in FUCOs of $643.1 million in FUCOs. These investments consist of interests in projects located in the Netherlands, Australia and Austria and were made under long-term leveraged leases.

Applicants request that the authorizations previously granted by the Commission for Conectiv to invest in EWGs continue in effect upon consummation of the Merger pending authorization of the request for further investment in EWGs and FUCOs described in the Application. Applicants further request that Pepco maintain its current investments in FUCOs.

After the Merger, Applicants seek authority to finance additional EWG and FUCO investments in an aggregate amount of up to 100 percent of PHI's consolidated retained earnings plus $3.5 billion (''PHI Exempt Project Limit'') during the Authorization Period. These financings may include the issuance or sale of securities for the purpose of financing the acquisition or operations of an EWG or FUCO or the guarantee of a security of an EWG or FUCO.

L. Payment of Dividends out of Capital or Unearned Surplus

1. PHI and Conectiv

Applicants propose that PHI and Conectiv be permitted to pay dividends, from time to time through the Authorization Period, out of capital and unearned surplus, to the extent permitted under applicable corporate law. Applicants request that the Commission reserve jurisdiction over this proposal pending completion of the record.

2. Utility Subsidiaries

Applicants propose that the Utility Subsidiaries be permitted to pay dividends, from time to time through the Authorization Period, out of capital and unearned surplus, to the extent permitted under applicable corporate law. Applicants request that the

[4] *See* HCAR No. 27213 (August 17, 2000).

Commission reserve jurisdiction over this proposal pending completion of the record.

3. Nonutility Subsidiaries

Applicants propose that the Nonutility Subsidiaries (including CEH, ACE REIT, CAG, CDG, CPGI and the New Utility Subsidiaries upon the receipt of EWG status) be permitted to pay dividends, from time to time through the Authorization Period, out of capital and unearned surplus, to the extent permitted under applicable corporate law.

For the Commission, by the Division of Investment Management, pursuant to delegated authority.

Margaret H. McFarland,

Deputy Secretary.

[FR Doc. 02–9313 Filed 4–16–02; 8:45 am]

BILLING CODE 8010–01–P

SECURITIES AND EXCHANGE COMMISSION

[Release No. 34–45727; File No. SR–Amex–2002–08]

Self-Regulatory Organizations; Notice of Filing and Immediate Effectiveness of Proposed Rule Change and Amendment Nos. 1 and 2 Thereto by the American Stock Exchange LLC Relating to Specialist Unit Fees

April 10, 2002.

Pursuant to section 19(b)(1) of the Securities Exchange Act of 1934 (''Act''), [1] and Rule 19b–4 [2] thereunder, notice is hereby given that on February 7, 2002, the American Stock Exchange LLC (''Exchange'' or ''Amex'') filed with the Securities and Exchange Commission (''SEC'' or ''Commission'') the proposed rule change as described in Items I, II, and III below, which Items have been prepared by the Amex. On March 13, 2002, the Amex submitted Amendment No. 1 to the proposed rule change.[3] On March 18, 2002, the Amex submitted Amendment No. 2 to the proposed rule change.[4] The Commission is publishing this notice to solicit comments on the proposed rule change, as amended, from interested persons.

I. Self-Regulatory Organization's Statement of the Terms of Substance of the Proposed Rule Change

The Amex is proposing to modify its Member Fee Schedule to pass through to Amex specialist units any fee paid by the Exchange to a third party in connection with the listing and trading of a security allocated to such specialist unit.

The text of the proposed rule change, as amended, is available at the Amex and at the Commission.

II. Self-Regulatory Organization's Statement of the Purpose of, and Statutory Basis for, the Proposed Rule Change

In its filing with the Commission, the Amex included statements concerning the purpose of and basis for the proposed rule change, as amended, and discussed any comments it received on the proposed rule change. The text of these statements may be examined at the places specified in Item IV below. The Amex has prepared summaries, set forth in Sections A, B, and C below, of the most significant aspects of such statements.

A. Self-Regulatory Organization's Statement of the Purpose of, and Statutory Basis for, the Proposed Rule Change

1. Purpose

In connection with the listing and trading of certain securities on the Exchange, the Exchange may be required to pay fees to third parties as a condition to listing. For example, the Exchange may pay license fees to index providers to list index options or exchange-traded funds based on a stock index. The Exchange may also pay other types of fees to third parties in connection with a particular listing.

The Exchange proposes to pass such fees through to the Amex specialist unit allocated a security for which the Exchange pays such fees. This fee, which will be included in the Amex Member Fees Schedule under ''Membership Fees,'' will be applicable to any securities traded on the Exchange for which the Exchange pays a fee in connection with Amex listing or trading, including equities, options, structured products, exchange-traded funds and Trust Issued Receipts.

The Exchange currently imposes license fees on a per transaction basis applicable to specialists and registered options traders in connection with trading of options on the Nasdaq 100 Index Tracking Stock (symbol QQQ), Nasdaq 100 Index (symbol: NDX), Mini NDX (symbol: MNX), and options on S&P 100 iShares (symbol: OEF). These fees were filed with the Commission in SR–Amex–2001–101. [5] The Exchange represents that it will not pass through fees to the specialist unit that the Exchange pays to third parties, if the Exchange imposes a license fee on a per transaction basis with respect to the allocated security, (*e.g.,* the Options Licensing Fee imposed under the Options Fee Schedule, as described in SR–Amex–2001–101).

The Exchange represents that any fee passed through to the specialist unit pursuant to this filing will reflect only actual costs incurred by the Exchange in connection with Exchange listing or trading of the allocated security. Such fee could be imposed in connection with any security traded on the Exchange, whether a listed security or a security traded pursuant to unlisted trading privileges. The fee is not intended to cover any form of payment for order flow by the Exchange (in the event the Exchange determines to engage in such payment), and any imposition of fees on members or member organizations to permit the Exchange to recoup such payment would be filed separately with the Commission pursuant to Rule 19b–4.[6]

2. Basis

The Exchange believes the proposed rule change, as amended, is consistent with section 6 of the Act,[7] in general, and with section 6(b)(4) of the Act,[8] in particular, in that it is designed to provide for the equitable allocation of reasonable dues, fees, and other charges among its members and issuers and other persons using its facilities.

---

[1] 15 U.S.C. 78s(b)(1).

[2] 17 CFR 240.19b–4.

[3] *See* letter from Geraldine Brindisi, Vice President and Corporate Secretary, Amex, to Nancy J. Sanow, Assistant Director, Division of Market Regulation (''Division''), Commission, dated March 12, 2002 (''Amendment No. 1''). In Amendment No. 1, the Amex: (1) Removed its discretion to waive all or a portion of the proposed fee; (2) described its existing license fees and their application; (3) explained that the proposed fee is intended to recoup costs incurred by the Exchange; (4) represented that the proposed fee will be imposed on any security traded on the Exchange, whether listed or traded pursuant to unlisted trading privileges; and (5) asserted that the proposed fee is not intended to cover any form of payment for order flow.

[4] *See* letter from Claire McGrath, Amex, to Nancy J. Sanow, Assistant Director, Division, Commission, dated March 14, 2002 (''Amendment No. 2''). In Amendment No. 2, the Amex added rule text and a made a conforming change to the purpose section stating that it would not pass through any proposed fee to a specialist unit allocated a security if the Exchange imposes a license fee on such specialist unit on a per transaction basis with respect to trading in the same security. The Amex also made a technical correction to the purpose section. For purposes of calculating the 60-day period within which the Commission may summarily abrogate the proposed rule change under section 19(b)(3)(C) of the Act, the Commission considers that period to commence on March 18, 2002, the date the Amex filed Amendment No. 2. *See* 15 U.S.C. 78s(b)(3)(C).

[5] *See* Securities Exchange Act Release No. 45163 (December 18, 2001), 66 FR 66958 (December 27, 2001).

[6] 17 CFR 240.19b–4.

[7] 15 U.S.C. 78f.

[8] 15 U.S.C. 78f(b)(4).

B. Self-Regulatory Organization's Statement on Burden on Competition

The Amex does not believe that the proposed rule change, as amended, will impose any burden on competition.

C. Self-Regulatory Organization's Statement on Comments on the Proposed Rule Change Received From Members, Participants, or Others

Written comments on the proposed rule change, as amended, were neither solicited nor received.

III. Date of Effectiveness of the Proposed Rule Change and Timing for Commission Action

The foregoing proposed rule change, as amended, has become effective pursuant to section 19(b)(3)(A)(ii) of the Act [9] and subparagraph (f)(2) of Rule 19b–4 [10] thereunder, because it establishes or changes a due, fee, or other charge. At any time within 60 days of March 18, 2002,[11] the Commission may summarily abrogate such rule change if it appears to the Commission that such action is necessary or appropriate in the public interest, for the protection of investors, or otherwise in furtherance of the purposes of the Act.[12]

IV. Solicitation of Comments

Interested persons are invited to submit written data, views, and arguments concerning the foregoing, including whether the proposed rule change, as amended, is consistent with the Act. Persons making written submissions should file six copies thereof with the Secretary, Securities and Exchange Commission, 450 Fifth Street, NW., Washington, DC 20549–0609. Copies of the submission, all subsequent amendments, all written statements with respect to the proposed rule change, as amended, that are filed with the Commission, and all written communications relating to the proposed rule change between the Commission and any person, other than those that may be withheld from the public in accordance with the provisions of 5 U.S.C. 552, will be available for inspection and copying in the Commission's Public Reference Room. Copies of such filing will also be available for inspection and copying at the principal office of the Amex. All submissions should refer to File No. SR–Amex–2002–08 and should be submitted by May 8, 2002.

[9] 15 U.S.C. 78s(b)(3)(A)(ii).

[10] 17 CFR 240.19b–4(f)(2).

[11] *See supra* note 4.

[12] *See* 15 U.S.C. 78s(b)(3)(C).

For the Commission, by the Division of Market Regulation, pursuant to delegated authority.[13]

Margaret H. McFarland,

Deputy Secretary.

[FR Doc. 02–9311 Filed 4–16–02; 8:45 am]

BILLING CODE 8010–01–P

SECURITIES AND EXCHANGE COMMISSION

[Release No. 34–45728; File No. SR–Amex–2002–17]

Self-Regulatory Organizations; Notice of Filing and Immediate Effectiveness of Proposed Rule Change by American Stock Exchange LLC Relating to IntraDay Comparison Fees for Equities

April 10, 2002.

Pursuant to section 19(b)(1) of the Securities Exchange Act of 1934 (''Act''), [1] notice is hereby given that on March 20, 2002, the American Stock Exchange LLC (''Amex'' or ''Exchange'') filed with the Securities and Exchange Commission (''Commission'') the proposed rule change as described in Items I, II, and III below, which Items have been prepared by the Exchange. The Commission is publishing this notice to solicit comments on the proposed rule change from interested persons.

I. Self-Regulatory Organization's Statement of the Terms of Substance of the Proposed Rule Change

The Exchange proposes to amend the Amex's Registration and IntraDay Comparison (''IDC'') Fees Schedule relating to Equity IDC Fees. New language is in italics.

Registration and IDC Fees

I. Membership Registration
No change
II. Options IDC
No change
III. *Equities IDC*
Dedicated Access $200/month
User I.D. 50/month

Transaction Processing Fee

(applied to T0 trades):

Shares per side

1–999 0.00 per side
1,000–2,999 0.03 per side
3,000 + 0.09 per side

Questioned Trade Charge

(applied to T+1, T+2, etc. trades): 0.20 per side

[13] 17 CFR 200.30–3(a)(12).

[1] 15 U.S.C. 78s(b)(1).

II. Self-Regulatory Organization's Statement of the Purpose of, and Statutory Basis for, the Proposed Rule Change

In its filing with the Commission, the Exchange included statements concerning the purpose of and basis for the proposed rule change and discussed any comments it received on the proposed rule change. The text of these statements may be examined at the places specified in Item IV below. The Amex has prepared summaries, set forth in Sections A, B, and C below, of the most significant aspects of such statements.

A. Self-Regulatory Organization's Statement of the Purpose of, and Statutory Basis for, the Proposed Rule Change

1. Purpose

The Amex will be implementing a new trade comparison system for equities called Intra-Day Comparison System for Equities (''IDC–E''), as developed by the Securities Industry Automation Corporation (''SIAC''). IDC–E will provide real-time intra-day trade comparisons applicable to all trades, including system and non-system trades. System trades include executions of orders entered in the Amex Order File (''AOF''), the Exchange's automated order routing facility; non-system trades include execution of orders not entered into AOF (*e.g.,* crowd to crowd trades). The benefits of intra-day comparison include reduction of the uncompared rate for equities, improvement in trade processing efficiency, and reduction of risk to member firms resulting from open positions.

Amex proposes to charge the following IDC–E transaction processing fees to Amex clearing firm members, effective May 1, 2002. The Questioned Trade Charge per questioned trade (applied to T+1, T+2, etc. trades) will be $0.20 per side. The transaction processing fee for transactions submitted for trade date comparison (per side) will be $0.03 for transactions of 1,000–2,999 shares per side, and $0.09 for transactions of 3,000 shares or more per side. (Transactions of less than 1,000 shares per side will not be charged.)

The Exchange also proposes to charge each clearing firm member a Dedicated Remote Access Fee of $2,400 annually. This is equal to Amex's Dedicated Remote Access fee of $2,400 per year for Intra-Day Comparison for Options (''IDC–O''). The Exchange will charge each clearing firm member $600

annually for User ID's, equal to AMEX's User ID fee of $600 per year for IDC–O.

IDC–E charges are intended to be cost-neutral to the clearing firm members and are not expected to result in overall increased comparison charges for clearing firm members.

2. Statutory Basis

The proposed rule change is consistent with section 6(b) of the Act [2] in general and furthers the objectives of section 6(b)(4) of the Act [3] in particular in that it is designed to provide for the equitable allocation of reasonable dues, fees, and other charges among its members and issuers and other persons using its facilities.

B. Self-Regulatory Organization's Statement on Burden on Competition

The Exchange does not believe that the proposed rule change will impose any burden on competition.

C. Self-Regulatory Organization's Statement on Comments on the Proposed Rule Change Received From Members, Participants or Others

No written comments were solicited or received with respect to the proposed rule change.

III. Date of Effectiveness of the Proposed Rule Change and Timing for Commission Action

The foregoing rule change has become effective pursuant to section 19(b)(3)(A)(ii) of the Act [4] and subparagraph (f)(2) of Rule 19b–4 thereunder [5] because it establishes or changes a due, fee, or other charge. At any time within 60 days of the filing of such proposed rule change, the Commission may summarily abrogate such rule change if it appears to the Commission that such action is necessary of appropriate in the public interest, for the protection of investors, or otherwise in the furtherance of the purposes of the Act.

IV. Solicitation of Comments

Interested persons are invited to submit written data, views and arguments concerning the foregoing, including whether the proposed rule change is consistent with the Act. Persons making written submissions should file six copies thereof with the Secretary, Securities and Exchange Commission, 450 Fifth Street, NW., Washington, DC 20549–0609. Copies of the submission, all subsequent amendments, all written statements with respect to the proposed rule change that are filed with the Commission, and all written communications relating to the proposed rule change between the Commission and any person, other than those that may be withheld from the public in accordance with the provisions of 5 U.S.C. 552, will be available for inspection and copying in the Commission's Public Reference Room. Copies of such filing will also be available for inspection and copying at the principal office of the Amex. All submissions should refer to File No. SR–Amex–2002–17 and should be submitted by May 8, 2002.

For the Commission, by the Division of Market Regulation, pursuant to delegated authority.[6]

Margaret H. McFarland,

Deputy Secretary.

[FR Doc. 02–9312 Filed 4–16–02; 8:45 am]

BILLING CODE 8010–01–P

[2] 15 U.S.C. 78f(b).

[3] 15 U.S.C. 78f(b)(4).

[4] 15 U.S.C. 78s(b)(3)(A)(ii).

[5] 17 CFR 240.19b–4(f)(2).

[6] 17 CFR 200.30–3(a)(12).

SECURITIES AND EXCHANGE COMMISSION

[Release No. 34–45726; File No. SR–ISE–2002–07]

Self-Regulatory Organizations; Notice of Filing of Proposed Rule Change by the International Securities Exchange LLC Relating to Mandatory System Testing

April 10, 2002.

Pursuant to section 19(b)(1) of the Securities Exchange Act of 1934 (''Act''), [1] and Rule 19b–4 thereunder,[2] notice is hereby given that on February 13, 2002, the International Securities Exchange LLC (the ''Exchange'' or the ''ISE'') filed with the Securities and Exchange Commission (''Commission'') the proposed rule change, as described in Items I, II, and III below, which Items have been prepared by the ISE. The Commission is publishing this notice to solicit comments on the proposed rule change from interested persons.

I. Self-Regulatory Organization's Statement of the Terms of Substance of the Proposed Rule Change

The Exchange is proposing to adopt a rule requiring members to participate in specified systems tests. Below is the text of the proposed rule change. Proposed new language is in *italics.*

* * * * *

Rule 419. Mandatory Systems Testing

(a) Each member that the Exchange designates as required to participate in a system test must conduct or participate in the testing of its computer systems to ascertain the compatibility of such systems with the Exchange's systems in the manner and frequency prescribed by the Exchange. The Exchange will designate members as required to participate in a system test based on: the category of membership (Primary Market Maker, Competitive Market Maker and Electronic Access Member); the computer system(s) the member uses; and the manner in which the member connects to the Exchange. The Exchange will give Members reasonable notice of any mandatory systems test, which notice will specify the nature of the test and Members' obligations in participating in the test.

(b) Every member required by the Exchange to conduct or participate in testing of computer systems shall provide to the Exchange such reports relating to the testing as the Exchange may prescribe. Members shall maintain adequate documentation of tests required by this Rule and results of such testing for examination by the Exchange.

(c) A member or member organization that is subject to this Rule and that fails to conduct or participate in the tests, fails to file the required reports, or fails to maintain the required documentation, may be subject to disciplinary action pursuant to the Exchange's rules.

* * * * *

Rule 1614. Imposition of Fines for Minor Rule Violations

* * * * *

(d) Violations Subject to Fines. The following is a list of rule violations subject to, and the applicable sanctions that may be imposed by the Exchange pursuant to, this Rule:

* * * * *

(8) Mandatory Systems Testing (Rule 419). Failure to conduct or participate in the testing of computer systems, or failure to provide required reports or maintain required documentation, shall be subject to the fines listed below.

Violations within one calendar year	*Sanction*
First Violation	*$250.*
Second Violation	*$500.*
Third Violation	*$1000.*
Fourth Violation	*$2000.*
Fifth Violation or more	*Formal Disciplinary Action.*

[1] 15 U.S.C. 78s(b)(1).

[2] 17 CFR 240.19b–4.

II. Self-Regulatory Organization's Statement of the Purpose of, and Statutory Basis for, the Proposed Rule Change

In its filing with the Commission, the ISE included statements concerning the purpose of and basis for the proposed rule change and discussed any comments it received on the proposed rule change. The text of these statements may be examined at the places specified in Item IV below. The ISE has prepared summaries, set forth in Sections A, B, and C below, of the most significant aspects of such statements.

A. Self-Regulatory Organization's Statement of the Purpose of, and Statutory Basis for, the Proposed Rule Change

1. Purpose

According to the ISE, the purpose of the proposed rule change is to give the Exchange flexibility to require members to participate in mandated system tests. The ISE believes that it is critical that its members work closely with the Exchange in testing new software releases, especially as the Exchange implements new versions of its software. The ISE represents that, while its members generally have been responsive to its testing schedule, at times the Exchange has had difficulty getting the proper level of attention of a member, resulting in some members failing to be prepared to test according to the ISE's time schedule. The proposed rule change would give the Exchange the ability to designate certain tests as mandatory for specified classes of members. Failure to engage in a test would subject a member to disciplinary action, including possible fines pursuant to changes proposed to the ISE's minor rule violation program.

2. Statutory Basis

The ISE believes that the proposed rule change is consistent with section 6(b) of the Act,[3] in general, and furthers the objectives of section 6(b)(5)[4] in particular, which requires that an exchange have rules that are designed to prevent fraudulent and manipulative acts and practices, to promote just and equitable principles of trade, to remove impediments to and perfect the mechanism for a free and open market and a national market system and, in general, to protect investors and the public interest. The ISE also represents that the proposal is designed to further the purposes of section 6(b)(6)[5] requiring the rules of an exchange to provide that its members and persons associated with its members be appropriately disciplined for violation of the provisions of the Act, the rules or regulation thereunder, or the rules of the Exchange.

B. Self-Regulatory Organization's Statement on Burden on Competition

The proposed rule change does not impose any burden on competition that is not necessary or appropriate in furtherance of the purposes of the Act.

C. Self-Regulatory Organization's Statement on Comments on the Proposed Rule Change Received From Members, Participants or Others

The Exchange has not solicited, and does not intend to solicit, comments on this proposed rule change. The Exchange has not received any unsolicited written comments from members or other interested parties.

III. Date of Effectiveness of the Proposed Rule Change and Timing for Commission Action

Within 35 days of the date of publication of this notice in the **Federal Register** or within such longer period (i) as the Commission may designate up to 90 days of such date if it finds such longer period to be appropriate and publishes its reasons for so finding or (ii) as to which the ISE consents, the Commission will:

(A) by order approve the proposed rule change, or

(B) institute proceedings to determine whether the proposed rule change, should be disapproved.

IV. Solicitation of Comments

Interested persons are invited to submit written data, views, and arguments concerning the foregoing, including whether the proposed rule change is consistent with the Act. Persons making written submissions should file six copies thereof with the Secretary, Securities and Exchange Commission, 450 Fifth Street, NW, Washington, DC 20549–0609. Copies of the submission, all subsequent amendments, all written statements with respect to the proposed rule change that are filed with the Commission, and all written communications relating to the proposed rule change between the Commission and any person, other than those that may be withheld from the public in accordance with the provisions of 5 U.S.C. 552, will be available for inspection and copying at the Commission's Public Reference Room. Copies of such filing will also be available for inspection and copying at the principal office of the ISE. All submissions should refer to File No. SR–ISE–2002–07 and should be submitted by May 8, 2002.

For the Commission, by the Division of Market Regulation, pursuant to delegated authority.[6]

Margaret H. McFarland,

Deputy Secretary.

[FR Doc. 02–9310 Filed 4–16–02; 8:45 am]

BILLING CODE 8010–01–P

[3] 15 U.S.C. 78f(b).

[4] 15 U.S.C. 78f(b)(5).

[5] 15 U.S.C. 78f(b)(6).

[6] 17 CFR 200.30–3(a)(12).

SECURITIES AND EXCHANGE COMMISSION

[Release No. 34–45718; File No. SR–NYSE–2002–07]

Self-Regulatory Organizations; Notice of Filing and Order Granting Accelerated Approval of a Proposed Rule Change and Amendment Nos. 1 and 2 Thereto by the New York Stock Exchange, Inc. Relating to the Listing and Trading Standards of Trust Issued Receipts

April 9, 2002.

Pursuant to section 19(b)(1) of the Securities Exchange Act of 1934 (''Act'' or ''Exchange Act''),[1] and Rule 19b–4 thereunder,[2] notice is hereby given that on January 16, 2002, the New York Stock Exchange, Inc. (''NYSE'' or ''Exchange'') filed with the Securities and Exchange Commission (''Commission'') the proposed rule change as described in Items I and II below, which Items have been prepared by the Exchange. On March 28, 2002, the Exchange filed Amendment No. 1 to the proposed rule change.[3] On April 9, 2002, the Exchange filed Amendment No. 2 to the proposed rule change.[4] The Commission is publishing this notice to solicit comments on the proposed rule change from interested persons, and to approve the proposed rule change, as amended, on an accelerated basis.

[1] 15 U.S.C. 78s(b)(1).

[2] 17 CFR 240.19b–4.

[3] *See* Letter from Darla C. Stuckey, Corporate Secretary, NYSE, to Nancy J. Sanow, Assistant Director, Division of Market Regulation (''Division''), Commission (March 27, 2002) (''Amendment No. 1''). Amendment No. 1 replaces the original filing in its entirety, and makes clarifications and technical corrections to the proposed rule text.

[4] *See* Letter from James F. Duffy, Senior Vice President and Associate General Counsel, NYSE, to Nancy J. Sanow, Assistant Director, Division, Commission (April 9, 2002) (''Amendment No. 2''). Amendment No. 2 clarifies that the proposed rule change applies to a Trust Issued Receipt, not specific proprietary products, and clarifies rule text and the purpose of Rule 19b–4(e).

I. Self-Regulatory Organization's Statement of the Terms of Substance of the Proposed Rule Change

The Exchange proposes to adopt listing standards for the listing and trading, or the trading pursuant to unlisted trading privileges (''UTP''), of Trust Issued Receipts (''TIRs'') under NYSE Rules 1200 through 1202, and 703.20 of the NYSE's Listed Company Manual. The Exchange also proposes to amend its rules to incorporate the listing and trading of TIRs.[5] In addition, the Exchange proposes to adopt generic listing standards that permit the listing and trading, or trading pursuant to UTP of TIRs, pursuant to Rule 19b–4(e) of the Act.[6] The text of the proposed rule change is available at the Office of the Secretary, NYSE, and at the Commission.

II. Self-Regulatory Organization's Statement of the Purpose of, and Statutory Basis for, the Proposed Rule Change

In its filing with the Commission, the Exchange included statements concerning the purpose of, and basis for, the proposed rule change. The text of these statements may be examined at the places specified in Item III below. The Exchange has prepared summaries, set forth in Sections A, B, and C below, of the most significant aspects of such statements.

A. Self-Regulatory Organization's Statement of the Purpose of, and Statutory Basis for, the Proposed Rule Change

1. Purpose

The Exchange proposes to adopt rules to provide standards that permit the listing and trading, or the trading pursuant to UTP, of TIRs, including generic listing standards of TIRs, pursuant to Rule 19b–4(e) of the Act. The Exchange proposes to adopt listing standards applicable to TIRs consistent with the listing criteria currently used by the American Stock Exchange LLC (''Amex'') and other exchanges, in order to trade TIRs on the Exchange, and/or on a UTP basis. Thus, the Exchange proposes to adopt standards that permit the listing and trading, or trading pursuant to UTP, of TIRs, under Section 19(b)(2) of the Act.[7] In addition, the Exchange proposes to adopt *generic* listing and trading standards for the listing and trading, or trading pursuant to UTP, of TIRs, under Rule 19b–4(e) of the Act.[8]

Trust Issued Receipts Generally

TIRs are negotiable receipts that are issued by a trust representing securities of issuers that have been deposited and are held on behalf of the holders of the TIRs. TIRs are designed to allow investors to hold interests in a variety of companies throughout a particular industry in a single, exchange-listed and traded instrument that represents beneficial ownership in the deposited securities. Holders may cancel their TIRs at any time to receive the deposited securities.

Beneficial owners of TIRs will have the same rights, privileges and obligations as they would have if they beneficially owned the deposited securities outside of the TIR program. Holders of TIRs have the right to instruct the trustee to vote the deposited securities evidenced by the receipts. They will receive reports, proxies, and other information distributed by the issuers of the deposited securities to their security holders and will receive dividends and other distributions declared and paid by the issuers of the deposited securities to the trustee.

TIRs are not leveraged instruments, and therefore do not possess any of the attributes of stock index options. The Exchange believes that the level of risk involved in the purchase and sale of TIRs is almost identical to the risk involved in the purchase or sale of the common stocks represented by the receipt.

TIRs will be issued by a trust created pursuant to a depository trust agreement. After the initial offering, the trust may issue additional receipts on a continuous basis when an investor deposits the requisite securities with the trust. An investor in TIRs will be permitted to withdraw his or her deposited securities upon delivery to the trustee of one or more round-lots of 100 TIRs. Orders for other than a round lot (or round lot multiples) will not be allowed. Conversely, an investor may deposit the necessary securities and receive the TIRs in return.

Criteria for Initial and Continued Listing

The Exchange believes that the listing criteria proposed in its new rule are generally consistent with the listing criteria currently used by the Amex, the Chicago Stock Exchange, Inc. (the ''CHX''), the Chicago Board Options Exchange, Inc. (the ''CBOE'') and the Boston Stock Exchange, Inc. (the ''BSE'').[9]

If TIRs are to be listed on the NYSE, the Exchange will establish a minimum number of receipts that must be outstanding at the time trading commences on the Exchange, and such minimum number will be included in any required submission to the Commission. In connection with continued listing, the Exchange will consider the suspension of trading in, or removal from listing of, a series of TIRs when any of the following circumstances arise: (1) The trust has more than 60 days remaining until termination and there have been fewer than 50 record and/or beneficial holders of the TIRs for 30 or more consecutive trading days; (2) the trust has fewer than 50,000 receipts issued and outstanding; (3) the market value of all receipts issued and outstanding is less than $1 million; or (4) such other event occurs or condition exists which, in the opinion of the Exchange, makes further dealings on the Exchange inadvisable. These flexible criteria will allow the Exchange to avoid delisting TIRs (and possibly terminating the trust) due to relatively brief fluctuations in market conditions that may cause the number of holders to vary. However, these delisting criteria will not be applied for the initial 12-month period following formation of a trust and commencement of trading on the Exchange.

In addition, if the number of companies represented by the deposited securities drops to fewer than nine, and each time the number of companies is reduced thereafter, the Exchange will consult with the staff of the Division of Market Regulation to confirm the

[5] *See* Exchange Rules 13, 36, 98, 104, 105(l), 460, Allocation Policy and pre-opening and Market-On-Close (''MOC'') and Limit-at-the-Close (''LOC'') procedures.

[6] 17 CFR 240.19b–4(e). Rule 19b–4(e) provides that the listing and trading of a new derivative securities product by a self-regulatory organization (''SRO'') shall not be deemed a proposed rule change, pursuant to Rule 19b–4(c)(1) under the Act, if the Commission has approved, pursuant to Section 19(b) of the Act, the SRO's trading rules, procedures and listings standards for the product class that include the new derivative securities product and the SRO has a surveillance program for the product class. *See* 17 CFR 240.19b–4(e).

[7] 15 U.S.C. 78s(b)(2).

[8] 17 CFR 240.19b–4(e).

[9] *See* Securities Exchange Act Release No. 41892 (September 21, 1999) 64 FR 52559 (September 29, 1999) (approving the listing and trading of TIRs and Internet HOLDRs on the Amex); Securities Exchange Act Release No. 42056 (October 22, 1999), 64 FR 58870 (November 1, 1999) (approving the listing and trading of TIRs and Internet HOLDRs on the CHX pursuant to UTP); Securities Exchange Act Release No. 42347 (January 13, 2000), 65 FR 4451 (January 27, 2000) (approving the listing and trading of TIRs and Internet HOLDRs on the BSE pursuant to UTP); Securities Exchange Act Release No. 43134 (August 10, 2000), 65 FR 50255 (August 17, 2000) (approving the listing standards for TIRs on the CBOE) and Securities Exchange Act Release No. 44908 (October 4, 2001), 66 FR 52161 (October 12, 2001) (approving the generic listing and trading of TIRs and HOLDRs on the CBOE).

appropriateness of continued listing of TIRs.

Trading Trust Issued Receipts Pursuant to Rule 19b–4(e)

To accommodate the efficient listing and trading, or trading pursuant to UTP, of additional TIRs, the Exchange proposes to adopt generic listing and trading standards of TIRs pursuant to Rule 19b–4(e).[10] Rule 19b–4(e) provides that the listing and trading of a new derivative securities product by an SRO will not be deemed a proposed rule change, pursuant to paragraph (c)(1) of the Rule 19b–4,[11] if the Commission has approved, pursuant to section 19(b) of the Act,[12] the SRO's trading rules, procedures and listing requirements for the product class that include the new derivative securities product, and the SRO has a surveillance program for the product class.[13] The Exchange believes that the Commission's approval of the proposed generic listing requirements for TIRs will allow the NYSE to begin trading qualifying products without the need for notice and comment and Commission approval under section 19(b) of the Act.[14] The Exchange's ability to rely on Rule 19b–4(e) for these products potentially reduces the time frame for bringing these securities to the market and thus enhances investors' opportunities.

The Commission has previously approved requests of the Amex, CHX,[15] and the Pacific Exchange, Inc. (''PCX'') [16] to provide generic standards to list and/or trade TIRs.[17] The Exchange believes that its proposed listing requirements for TIRs are substantially similar to the generic listing requirements at the Amex, CHX, and the PCX.

Exchange Rules Applicable to the Trading of Trust Issued Receipts

TIRs are considered ''securities'' pursuant to NYSE Rule 3 and are subject to all applicable trading rules. TIRs will be deemed ''eligible securities'' for purposes of the Intermarket Trading System (''ITS'') Plan and therefore will be subject to the trade-through provisions of NYSE Rule 15A. TIRs are also subject to NYSE rules and policies governing, among other things, equity margin, priority, parity and precedence of orders, market volatility related trading halts, and responsibilities of member firms.[18]

The Exchange's surveillance procedures for TIRs will be similar to those used for investment company units and will incorporate and rely upon existing NYSE surveillance procedures governing equities.

Prior to the commencement of trading in TIRs, the Exchange will distribute a circular to the membership highlighting the characteristics of TIRs, including that TIRs are not individually redeemable. In addition, the circular will advise members of the Exchange about policies relating to trading halts in TIRs. Specifically, the circular will note that the Exchange may consider factors such as the extent to which trading is not occurring in the underlying security(s); whether trading has been halted or suspended in the primary market(s) for any combination of underlying stocks accounting for 20% or more of the applicable current portfolio value; and whether other unusual conditions or circumstances detrimental to the maintenance of a fair and orderly market are present.

Disclosure to Customers

The Exchange will require its members to provide all purchasers of newly issued TIRs with a prospectus for that series of TIRs.

Trading of TIRs

Upon approval of the NYSE's listing standards for TIRs, the Exchange intends to begin trading, on a UTP basis, some or all TIRs that are currently trading on other securities exchanges. The following paragraph contains information about TIRs generally.[19]

Each of the companies represented by the securities in the portfolios underlying the existing TIRs are required to meet the following minimum criteria of proposed NYSE Rule 1202 and Supplementary Material .10 when they are listed on the NYSE, or traded pursuant to UTP. The generic listing standards require the following: (1) That each company's common stock must be registered under Section 12 of the Exchange Act; (2) the minimum public float of each company included in the portfolio was at least $150 million; (3) each security was either listed on a national securities exchange or traded through the facilities of Nasdaq and a reported national market system security; (4) the average daily trading volume for each security was at least 100,000 shares during the preceding sixty-day trading period; and (5) the average daily dollar value of the shares traded during the preceding sixty-day trading period was at least $1 million. The initial weighting of each security in the portfolio was based on its market capitalization; however, any security that represented more than 20% of the overall value of the receipt on the date of the weighting was determined, was reduced to no more than 20% of the receipt value.

Trading Issues for TIRs

A round lot of any of the above TIRs represents a holder's individual and undivided beneficial ownership interest in the whole number of securities represented by the receipt. The amount of deposited securities for each round lot of 100 TIRs will be determined at the beginning of the marketing period and will be disclosed in the prospectus to investors. Because TIRs may be acquired, held or transferred only in round lots of 100 receipts or round lot multiples, orders for other than a round lot (or round lot multiples) will not be allowed.

The Exchange believes that TIRs will not trade at a material discount or

[10] Telephone conversation between Elena L. Daly, Assistant General Counsel, Office of General Counsel, NYSE, and Lisa N. Jones, Attorney, Division, Commission (April 2, 2002).

[11] 17 CFR 240.19b–4(c)(1).

[12] 15 U.S.C. 78s(b).

[13] *See* Securities Exchange Act Release No. 40761 (December 8, 1998), 63 FR 70952 (December 22, 1998).

[14] 15 U.S.C. 78s(b).

[15] *See* Securities Exchange Act Release No. 43396 (September 29, 2000), 65 FR 60230 (October 10, 2000).

[16] *See* Securities Exchange Act Release No. 44182 (April 16, 2001), 66 FR 21798 (May 1, 2001).

[17] Specifically, the Exchange proposes to provide generic standards to list or trade, pursuant to Rule 19b–4(e), any TIRs that meet the following criteria: (1) Each component security of the TIR must be registered under section 12 of the Act; (2) each component security of the TIR must have a minimum public float of at least $150 million; (3) each component security of the TIR must be listed on a national securities exchange or traded through the facilities of Nasdaq and a reported national market system security; (4) each component security of the TIR must have an average daily trading volume of at least 100,000 shares during the preceding sixty-day trading period; and (5) each component security of the TIR must have an average daily dollar value of shares traded during the preceding sixty-day trading period of at least $1 million. Finally, the Exchange proposes that no component security of the TIR may initially represent more than 20% of the overall value of the receipt.

[18] The Exchange notes that rules relating to odd lot executions will not apply, because TIRs are traded only in round lots or round lot multiples. Additionally, the Exchange understands that the Commission has provided an exemption from the short sale rule, Rule 10a–1 under the Act, 17 CFR 240.10a–1, for transactions in securities issued under the HOLDRs program. *See* Letter from James A. Brigagliano, Assistant Director, Division, Commission, to Claire P. McGrath, Vice President and Special Counsel Derivative Securities, Amex, dated (November 3, 1999), 1999 WL 692411 (SEC No-Action Letter). Thus, the NYSE will issue a notice to its members detailing the terms of the exemption, and confirming that applicable NYSE rules relating to short sales do not apply.

[19] The Exchange notes that this information is based upon descriptions included in the various TIRs prospectuses and depositary trust agreements, the Amex submissions relating to its TIR listing proposal, and the Commission's order approving the Amex proposal. *See* note 6, *supra.*

premium to the assets held by the issuing trust, because the arbitrage process should promote correlative pricing between the TIRs and the deposited securities. If the price of the TIR deviates enough from the portfolio of deposited securities to create a material discount or premium, an arbitrage opportunity would be created, allowing the arbitrageur to either: (1) Buy the TIRs at a discount, exchanging them for shares of the underlying securities and selling those shares at a profit; or (2) sell the TIRs short at a premium, buying the securities underlying the TIRs, depositing them in exchange for the TIRs, and delivering against the short position. In both instances, the arbitrageur locks in a profit and the markets move back into line.

The Exchange represents that its rules and policies currently applicable to investment company units will also apply to TIRs. These include the Exchange's policies regarding mandatory dissemination of pre-opening price indications (other than ITS pre-opening notifications) in the case of significant order imbalances, and the Exchange's MOC and LOC procedures (which do not apply to investment company units and will also not apply to TIRs). Other such rules and policies include those relating to specialist allocation, capital and net liquid assets requirements for specialist member organizations, market making activity by a specialist, and control relationships involving a specialist.

Maintenance of TIRs Portfolio

Except when a reconstitution event occurs, as described below, the securities represented by a TIR will not change. According to the prospectus of TIRs, under no circumstances will a new company be added to the group of issuers of the underlying securities, and weightings of component securities will not be adjusted after they are initially set.[20]

Reconstitution Events of TIRs

Trust agreements will provide for, and prospectuses for TIRs will describe, the automatic distribution of specified deposited securities in the trust's portfolio to the beneficial owners of TIRs in the circumstances referred to in such trust agreements and prospectuses as ''reconstitution events.'' The reconstitution events occur under the following circumstances:

(1) If the issuer of the underlying securities no longer has a class of common stock registered under Section 12 of the Act, then its securities will no longer be an underlying security and the trustee will distribute the securities of that company to the owners of the TIRs;

(2) If the Commission finds that an issuer of underlying securities should be registered as an investment company under the Investment Company Act of 1940, and the trustee has actual knowledge of the Commission's finding, then the trustee will distribute the shares of that company to the owners of the TIRs;

(3) If the underlying securities of an issuer cease to be outstanding as a result of a merger, consolidation or other corporate combination, the trustee will distribute the consideration paid by and received from the acquiring company to the beneficial owners of the TIRs, unless the acquiring company's securities are already included in the TIR as deposited securities, in which case such additional securities will be deposited into the trust; and

(4) If an issuer's underlying securities are delisted from trading on a national securities exchange or Nasdaq and are not listed for trading on another national securities exchange or through Nasdaq within five business days from the date the deposited securities are delisted.

As described in the prospectus, if a reconstitution event occurs, the trustee will deliver the deposited security to the investor as promptly as practicable after the date that the trustee has knowledge of the occurrence of a reconstitution event.

Issuance and Cancellation of TIRs

The trust will issue and cancel—and an investor may obtain, hold, trade or surrender—TIRs only in round lots of 100 or in round lot multiples. Orders for other than a round lot or round lot multiples will not be allowed. While investors will be able to acquire, hold, transfer and surrender a round lot of 100 TIRs, the bid and asked prices will be quoted on a per receipt basis. The trust will issue additional receipts on a continuous basis when an investor deposits the required securities with the trust.

An investor may obtain TIRs by either purchasing them on an exchange or by delivering to the trustee the underlying securities evidencing a round lot of TIRs. The trustee will charge an issuance and cancellation fee of up to $10.00 per 100 TIRs. Lower charges may be assigned for bulk issuances and cancellations. An investor may cancel TIRs and withdraw the deposited securities by delivering a round lot or round lot multiple of the TIRs to the trustee, during normal business hours. According to the prospectus, the trustee expects that, in most cases, it will deliver the deposited securities within one business day of the withdrawal request.

Termination of TIRs

The trust shall terminate upon the earlier of: (1) The removal of the TIRs from listing on a national securities exchange or Nasdaq if they are not listed for trading on another national securities exchange or Nasdaq within five business days from the date the receipts are delisted; (2) the trustee resigns and no successor trustee is appointed within 60 days from the date the trustee provides notice to the initial depositor of its intent to resign; (3) 75% of the beneficial owners of outstanding TIRs (*other than Merrill Lynch, Pierce, Fenner & Smith Incorporated*) vote to dissolve and liquidate the trust; or (4) December 31, 2039. If a termination event occurs, the trustee will distribute the underlying securities to the beneficial owners as promptly as practicable after the termination event.

2. Statutory Basis

The Exchange believes that the basis under Act for this proposed rule change is the requirement under section 6(b)(5) of the Act,[21] which provides that an exchange have rules that are designed to prevent fraudulent and manipulative acts and practices, to promote just and equitable principles of trade, to remove impediments to, and perfect the mechanism of a free and open market and, in general, to protect investors and the public interest.

III. Solicitation of Comments

Interested persons are invited to submit written data, views and arguments concerning the foregoing, including whether the proposed rule change, as amended, is consistent with the Act. Persons making written submissions should file six copies thereof with the Secretary, Securities and Exchange Commission, 450 Fifth Street, NW., Washington, DC 20549–0609. Copies of the submission, all subsequent amendments, all written statements with respect to the proposed rule change that are filed with the Commission, and all written communications relating to the proposed rule change between the

[20] The Exchange represents that the number of each security represented in a receipt may change due to certain corporate events such as stock splits or reverse stock splits on the deposited securities, and the relative weightings among the deposited securities may change based on the current market price of the deposited securities. *See* proposed NYSE Rule 1202, Supplementary Material .20.

[21] 15 U.S.C. 78f(b)(5).

Commission and any person, other than those that may be withheld from the public in accordance with the provisions of 5 U.S.C. 552, will be available for inspection and copying at the Commission's Public Reference Room. Copies of such filing will also be available for inspection and copying at the principal office of the NYSE. All submissions should refer to File No. SR–NYSE–2002–07 and should be submitted by May 8, 2002.

IV. Commission's Findings and Order Granting Accelerated Approval of Proposed Rule Change

After careful review, the Commission finds that the proposed rule change is consistent with the requirements of section 6(b)(5) of the Act [22] and the rules and regulations thereunder applicable to a national securities exchange. Specifically, the Commission finds, as it did with the Amex and other exchanges, that the proposal establishes listing standards for TIRs that will provide investors with a convenient and less expensive way of participating in the securities markets. The Exchange's proposal should advance the public interest by providing investors with increased flexibility in satisfying their investment needs by allowing them to purchase and sell a single security replicating the performance of a broad portfolio of stocks at negotiated prices throughout the business day. Accordingly, the Commission finds that the Exchange's proposal will facilitate transactions in securities, remove impediments to and perfect the mechanism of a free and open market and a national market system, and, in general, protect investors and the public interest, and is not designed to permit unfair discrimination between customers, issuers, brokers, or dealers.[23]

As noted in the Amex approval order, the Commission believes that TIRs will provide investors with an alternative to trading a broad range of securities on an individual basis, and will give investors the ability to trade TIRs representing a portfolio of securities continuously throughout the business day in secondary market transactions at negotiated prices. TIRs will allow investors to: (1) Respond quickly to changes in the overall securities markets generally and for the industry represented by a particular trust; (2) trade, at a price disseminated on a continuous basis, a single security representing a portfolio of securities that the investors owns beneficially; (3) engage in hedging strategies similar to those used by institutional investors; (4) reduce transaction costs for trading a portfolio of securities; and (5) retain beneficial ownership of the securities underlying the TIRs.

Although TIRs are not leveraged instruments, and therefore do not possess any of the attributes of stock index options, their prices will be derived and based upon the securities held in their respective trusts. Accordingly, the level of risk involved in the purchase or sale of trust issued receipts is similar to the risk involved in the purchase or sale of traditional common stock, with the exception that the pricing mechanism for trust issued receipts is based on a basket of securities.[24]

Trading of Trust Issued Receipts—Listing and UTP

The Commission finds that the NYSE's proposal contains adequate rules and procedures to govern the trading of TIRs, whether by listing or pursuant to UTP. TIRs are equity securities that will be subject to the full panoply of NYSE rules governing the trading of equity securities on the NYSE,[25] including, among others, rules governing the priority, parity and precedence of orders, responsibilities of the specialist, account opening and customer suitability requirements, and the election of a stop or limit order.[26]

In addition, the NYSE has developed specific listing and delisting criteria for TIRs that will help to ensure that a minimum level of liquidity will exist for TIRs to allow for the maintenance of fair and orderly markets. The delisting criteria also allows the NYSE to consider the suspension of trading and the delisting of a TIR if an event occurred that made further dealings in such securities inadvisable. This will give the NYSE flexibility to delist TIRs if circumstances warrant such action. The NYSE's proposal also provides procedures to halt trading in TIRs in certain enumerated circumstances.

Moreover, in approving this proposal, the Commission notes the Exchange's belief that TIRs will not trade at a material discount or premium in relation to the overall value of the trusts' assets because of potential arbitrage opportunities. The Exchange also represents that the potential for arbitrage should keep the market price of a TIR comparable to the overall value of the deposited securities.

The Commission believes that such trading should enhance market liquidity, and should promote more accurate pricing, tighter quotations, and reduced price fluctuations. The Commission also believes that such trading should allow customers to receive the best possible execution of their transactions in TIRs.

Finally, the NYSE will apply surveillance procedures for TIRs that will be similar to the procedures used for investment company units and will incorporate and rely upon existing NYSE surveillance procedures governing equities. The Commission believes that these surveillance procedures are adequate to address concerns associated with listing and trading TIRs, including any concerns associated with purchasing and redeeming round-lots of 100 receipts. Accordingly, the Commission believes that the rules governing the trading of TIRs provide adequate safeguards to prevent manipulative acts and practices and to protect investors and the public interest.

Disclosure and Dissemination of Information

The Commission believes that the Exchange's proposal will ensure that investors have information that will allow them to be adequately apprised of the terms, characteristics, and risk of trading TIRs. The prospectus will address the special characteristics of a particular TIR basket, including a statement regarding its redeemability and method of creation. The Commission notes that all investors in TIRs who purchase in the initial offering will receive a prospectus. In addition, anyone purchasing a TIR directly from the trust (by delivering the underlying securities to the trust) will also receive a prospectus. Finally, all NYSE member firms who purchase TIRs from the trust for resale to customers must deliver a prospectus to such customers.

The Commission also notes that upon the initial listing of any TIRs, the Exchange will issue a circular to its members explaining the unique characteristics and risks of this type of

[22] 15 U.S.C. 78f(b)(5).

[23] In approving this rule, the Commission notes that it has also considered the proposed rule's impact on efficiency, competition, and capital formation. 15 U.S.C. 78c(f).

[24] The Commission has concerns about continued trading of the TIRs whether listed or pursuant to UTP, if the number of component securities falls to reflect a cross section of the selected industry. Accordingly, the NYSE has represented that it would consult the Commission concerning continued trading, once the trust has fewer than nine component securities, and for each subsequent loss of a security thereafter.

[25] The Commission notes that the amendments to NYSE trading rules are substantially similar to changes approved for the trading of exchange-traded funds. *See* Securities Exchange Act Release No. 44616 (July 30, 2001), 66 FR 40761 (August 3, 2001).

[26] Trading rules pertaining to the availability of odd-lot trading do not apply because TIRs only can be traded in round-lots.

security. The circular also will note the Exchange members' prospectus delivery requirements, and highlight the characteristics of purchases in TIRs. The circular also will inform members of Exchange policies regarding trading halts in TIRs.

Trading TIRs Pursuant to Rule 19b–4(e)

The Commission further believes that adopting generic listing standards for these securities pursuant to Rule 19b–4(e) under the Act should fulfill the intended objective of the rule by giving the NYSE the ability to potentially reduce the time frame for bringing these securities to the market, or for permitting the trading of these securities pursuant to UTP, and thus enhances investors' opportunities. The Commission notes that it maintains regulatory oversight over any products listed under the generic standards through regular inspection oversight.

The Commission finds that the NYSE's proposal contains adequate rules and procedures to govern the listing and trading of TIRs pursuant to Rule 19b–4(e) on the NYSE, or pursuant to UTP. All TIR products listed under the generic standards will be subject to the full panoply of NYSE rules and procedures that now govern both the trading of TIRs and the trading of equity securities.

As described above, the Commission has previously approved similar Amex, CHX, and PCX rules that permit the generic listing and trading of individual TIRs. In approving these securities for trading, the Commission considered their structure, their usefulness to investors and the markets, and the Exchanges' rules and surveillance programs that govern their trading. The Commission concluded then, as it does now, that securities approved for listing under those rules would allow investors to: (1) Respond quickly to changes in the overall securities markets generally and for the industry represented by a particular trust; (2) trade, at a price disseminated on a continuous basis, a single security representing a portfolio of securities that the investor owns beneficially; (3) engage in hedging strategies similar to those used by institutional investors; (4) reduce transactions costs for trading a portfolio of securities; and (5) retain beneficial ownership of the securities underlying the TIRs.

The Commission notes that the NYSE's proposed generic listing standards are substantially similar to the Amex, CHX and PCX. The Commission therefore believes that TIRs that satisfy the NYSE's proposed generic listing standards should produce the same benefits to the NYSE and to investors.

The NYSE has requested that the Commission find good cause for approving the proposed rule change, and Amendments Nos. 1 and 2 prior to the thirtieth day after the date of publication of notice in the **Federal Register**. The Commission believes that the Exchange's proposal to trade TIRs, pursuant to UTP, will provide investors with a convenient and less expensive way of participating in the securities markets. The Commission believes that the proposed rule change, as amended, could produce added benefits to investors through the increased competition between other market centers trading the product. Specifically, the Commission believes that by increasing the availability of TIRs as an investment tool, the NSYE's proposal should help provide investors with increased flexibility in satisfying their investment needs, by allowing them to purchase and sell a single security replicating the performance of a broad portfolio of stocks at negotiated prices throughout the business day.

As noted above, the Commission has approved the listing and trading of TIRs at the Amex, under rules that are substantially similar to the NYSE rules.[27] The trading requirements of TIRs at the NYSE will be substantially similar to the trading requirements of TIRs at the Amex. The Commission published those rules in the **Federal Register** for the full notice and comment period. No comments were received on the proposed rules, and the Commission found them consistent with the Act.[28] The Commission does not believe that trading of this product raises novel regulatory issues that were not addressed in the previous filing. Accordingly, the Commission finds good cause for approving the proposed rule change, as amended, prior to the thirtieth day after the date of publication of notice in the **Federal Register**.

V. Conclusion

It is therefore ordered, pursuant to section 19(b)(2) of the Act,[29] that the proposed rule change, as amended, (SR–NYSE–2002–07) is hereby approved on an accelerated basis.

For the Commission, by the Division of Market Regulation, pursuant to delegated authority.[30]

Margaret H. McFarland,

Deputy Secretary.

[FR Doc. 02–9309 Filed 4–16–02; 8:45 am]

BILLING CODE 8010–01–P

[27] *See* note 6, *supra.*

[28] *Id.*

[29] 15 U.S.C. 78s(b)(2).

[30] 17 CFR 200.30–3(a)(12).

SECURITIES AND EXCHANGE COMMISSION

[Release No. 34–45729; File No. SR–NYSE–2002–15]

Self-Regulatory Organizations; Notice of Filing and Order Granting Accelerated Approval of a Proposed Rule Change by the New York Stock Exchange, Inc. Relating to the Trading of Certain Holding Company Depositary Receipts

April 10, 2002.

Pursuant to section 19(b)(1) of the Securities Exchange Act of 1934 (''Act''), [1] and Rule 19b–4 thereunder,[2] notice is hereby given that on April 10, 2002, the New York Stock Exchange, Inc. (''NYSE'' or ''Exchange'') filed with the Securities and Exchange Commission (''Commission'') the proposed rule change as described in Items I and II below, which Items have been prepared by the Exchange. The Commission is publishing this notice to solicit comments on the proposed rule change from interested persons, and to approve the proposed rule change on an accelerated basis.

I. Self-Regulatory Organization's Statement of the Terms of Substance of the Proposed Rule Change

The Exchange proposes to adopt standards for the trading pursuant to unlisted trading privileges (''UTP''), of certain Trust Issued Receipts (''TIRs''), known as Holding Company Depositary Receipts (''HOLDRS'').[3] The text of the proposed rule change is available at the Office of the Secretary, NYSE, and at the Commission.

[1] 15 U.S.C. 78s(b)(1).

[2] 17 CFR 240.19b–4.

[3] On April 9, 2002, the Commission approved the Exchange's listing standards for the listing and trading, or the trading pursuant to UTP, of TIRs under NYSE Rules 1200 through 1202, and Paragraph 703.20 of the NYSE's Listed Company Manual. The Commission also approved amendments to the Exchange's Rules 13, 36, 98, 104, 105(1), 460, the Allocation Policy and pre-opening and MOC/LOC policies to incorporate therein referenced to TIRs. Finally, the Commission approved the Exchange's generic listing standards that permit the listing and trading, or trading pursuant to UTP of TIRs, pursuant to Rule 19b–4(e) of the Act. *See* Securities Exchange Act Release No. 45719 (April 9, 2002).

II. Self-Regulatory Organization's Statement of the Purpose of, and Statutory Basis for, the Proposed Rule Change

In its filing with the Commission, the Exchange included statements concerning the purpose of, and basis for, the proposed rule change. The text of these statements may be examined at the places specified in Item III below. The Exchange has prepared summaries, set forth in Sections A, B, and C below, of the most significant aspects of such statements.

A. Self-Regulatory Organization's Statement of the Purpose of, and Statutory Basis for, the Proposed Rule Change

1. Purpose

The Exchange proposes to trade pursuant to UTP the following HOLDRs: (1) Broadband; (2) B2B Internet, (3) Europe 2001, (4) Internet Infrastructure, (5) Market 2000, (6) Wireless, and (7) Telecom (each a ''HOLDR'' and collectively, the ''HOLDRs''). The HOLDRs currently are listed and traded on the Amex and trade on other securities exchanges, and in the over-the-counter market. The following paragraphs contain information applicable to all the HOLDRs generally.[4]

Trust Issued Receipts Generally

HOLDRs, a type of TIRs, are negotiable receipts that are issued by a trust representing securities of issuers that have been deposited and are held on behalf of the holders of the TIRs. TIRs are designed to allow investors to hold interests in a variety of companies throughout a particular industry in a single, exchange-listed and traded instrument that represents beneficial ownership in the deposited securities. Holders may cancel their TIRs at any time to receive the deposited securities.

Beneficial owners of TIRs will have the same rights, privileges and obligations as they would have if they beneficially owned the deposited securities outside of the TIR program. Holders of TIRs have the right to instruct the trustee to vote the deposited securities evidenced by the receipts. They will receive reports, proxies, and other information distributed by the issuers of the deposited securities to their security holders and will receive dividends and other distributions declared and paid by the issuers of the deposited securities to the trustee.

TIRs are not leveraged instruments, and therefore do not possess any of the attributes of stock index options. The Exchange believes that the level of risk involved in the purchase and sale of TIRs is almost identical to the risk involved in the purchase or sale of the common stocks represented by the receipt.

TIRs will be issued by a trust created pursuant to a depository trust agreement. After the initial offering, the trust may issue additional receipts on a continuous basis when an investor deposits the requisite securities with the trust. An investor in TIRs will be permitted to withdraw his or her deposited securities upon delivery to the trustee of one or more round-lots of 100 TIRs. Orders for other than a round lot (or round lot multiples) will not be allowed. Conversely, an investor may deposit the necessary securities and receive the TIRs in return.

Exchange Rules Applicable to the Trading of HOLDRs

TIRs, including the HOLDRs, are considered ''securities'' pursuant to NYSE Rule 3 and are subject to all applicable trading rules. The HOLDRs will be deemed ''eligible securities'' for purposes of the Intermarket Trading System (''ITS'') Plan and therefore will be subject to the trade-through provisions of NYSE Rule 15A. The HOLDRs, as TIRs, are also subject to NYSE rules and policies governing, among other things, equity margin, priority, parity and precedence of orders, market volatility related trading halts, and responsibilities of member firms.[5]

The Exchange's surveillance procedures for HOLDRs will be similar to those used for investment company units and will incorporate and rely upon existing NYSE surveillance procedures governing equities.

Prior to the commencement of trading in HOLDRs, the Exchange will distribute a circular to the membership highlighting the characteristics of HOLDRs, including that HOLDRs are not individually redeemable. In addition, the circular will advise members of the Exchange about policies relating to trading halts in HOLDRs. Specifically, the circular will note that the Exchange may consider factors such as the extent to which trading is not occurring in the underlying security(s); whether trading has been halted or suspended in the primary market(s) for any combination of underlying stocks accounting for 20% or more of the applicable current portfolio value; and whether other unusual conditions or circumstances detrimental to the maintenance of a fair and orderly market are present.

Disclosure to Customers

The Exchange will require its members to provide all purchasers of newly issued TIRs with a prospectus for that series of HOLDRs.

Trading Issues for TIRs (including HOLDRs)

A round lot of any of the above TIRs represents a holder's individual and undivided beneficial ownership interest in the whole number of securities represented by the receipt. The amount of deposited securities for each round lot of 100 TIRs will be determined at the beginning of the marketing period and will be disclosed in the prospectus to investors. Because TIRs may be acquired, held or transferred only in round lots of 100 receipts or round lot multiples, orders for other than a round lot (or round lot multiples) will not be allowed.

The Exchange believes that HOLDRs will not trade at a material discount or premium to the assets held by the issuing trust, because the arbitrage process should promote correlative pricing between the HOLDRs and the deposited securities. If the price of the HOLDR deviates enough from the portfolio of deposited securities to create a material discount or premium, an arbitrage opportunity would be created, allowing the arbitrageur to either: (1) Buy the HOLDRs at a discount, exchanging them for shares of the underlying securities and selling those shares at a profit; or (2) sell the HOLDRs short at a premium, buying the securities underlying the HOLDRs, depositing them in exchange for the HOLDRs, and delivering against the short position. In both instances, the arbitrageur locks in a profit and the markets move back into line.

The Exchange represents that its rules and policies currently applicable to investment company units will also

[4] The Exchange notes that this information is based upon descriptions included in the various TIRs prospectuses and depositary trust agreements, the American Stock Exchange LLC (''Amex'') submissions relating to its TIR listing proposal, and the Commission's order approving the Amex proposal.

[5] The Exchange notes that rules relating to odd lot executions will not apply, because TIRs are traded only in round lots or round lot multiples. Additionally, the Exchange understands that the Commission has provided an exemption from the short sale rule, Rule 10a–1 under the Act, 17 CFR 240.10a–1, for transactions in securities issued under the HOLDRs program. *See* Letter from James A. Brigagliano, Assistant Director, Division of Market Regulation (''Division''), Commission, to Claire P. McGrath, Vice President and Special Counsel Derivative Securities, Amex, dated (November 3, 1999), 1999 WL 692411 (SEC No-Action Letter). Thus, the NYSE will issue a notice to its members detailing the terms of the exemption, and confirming that applicable NYSE rules relating to short sales do not apply.

apply to the HOLDRs. These include the Exchange's policies regarding mandatory dissemination of pre-opening price indications (other than ITS pre-opening notifications) in the case of significant order imbalances, and the Exchange's MOC and LOC procedures (which do not apply to investment company units and will also not apply to the HOLDRs). Other such rules and policies include those relating to specialist allocation, capital and net liquid assets requirements for specialist member organizations, market making activity by a specialist, and control relationships involving a specialist.

Maintenance of the HOLDRs Portfolio

Except when a reconstitution event occurs, as described below, the securities represented by a HOLDR will not change. According to the prospectus of TIRs, under no circumstances will a new company be added to the group of issuers of the underlying securities, and weightings of component securities will not be adjusted after they are initially set.[6]

Reconstitution Events of HOLDRs

Trust agreements will provide for, and prospectuses for HOLDRs will describe, the automatic distribution of specified deposited securities in the trust's portfolio to the beneficial owners of HOLDRs in the circumstances referred to in such trust agreements and prospectuses as ''reconstitution events.'' The reconstitution events occur under the following circumstances:

(1) If the issuer of the underlying securities no longer has a class of common stock registered under Section 12 of the Act, then its securities will no longer be an underlying security and the trustee will distribute the securities of that company to the owners of the HOLDRs;

(2) If the Commission finds that an issuer of underlying securities should be registered as an investment company under the Investment Company Act of 1940, and the trustee has actual knowledge of the Commission's finding, then the trustee will distribute the shares of that company to the owners of the HOLDRs;

(3) If the underlying securities of an issuer cease to be outstanding as a result of a merger, consolidation or other corporate combination, the trustee will distribute the consideration paid by and received from the acquiring company to the beneficial owners of the HOLDRs, unless the acquiring company's securities are already included in the HOLDRs as deposited securities, in which case such additional securities will be deposited into the trust; and

(4) If an issuer's underlying securities are delisted from trading on a national securities exchange or Nasdaq and are not listed for trading on another national securities exchange or through Nasdaq within five business days from the date the deposited securities are delisted.

As described in the prospectus, if a reconstitution event occurs, the trustee will deliver the deposited security to the investor as promptly as practicable after the date that the trustee has knowledge of the occurrence of a reconstitution event.

Issuance and Cancellation of HOLDRs

The trust will issue and cancel—and an investor may obtain, hold, trade or surrender—HOLDRs only in round lots of 100 or in round lot multiples. Orders for other than a round lot or round lot multiples will not be allowed. While investors will be able to acquire, hold, transfer and surrender a round lot of 100 HOLDRs, the bid and asked prices will be quoted on a per receipt basis. The trust will issue additional receipts on a continuous basis when an investor deposits the required securities with the trust.

An investor may obtain HOLDRs by either purchasing them on an exchange or by delivering to the trustee the underlying securities evidencing a round lot of HOLDRs. The trustee will charge an issuance and cancellation fee of up to $10.00 per 100 HOLDRs. Lower charges may be assigned for bulk issuances and cancellations. An investor may cancel HOLDRs and withdraw the deposited securities by delivering a round lot or round lot multiple of the TIRs to the trustee, during normal business hours. According to the prospectus, the trustee expects that, in most cases, it will deliver the deposited securities within one business day of the withdrawal request.

Termination of HOLDRs

The trust shall terminate upon the earlier of: (1) The removal of the HOLDRs from listing on a national securities exchange or Nasdaq if they are not listed for trading on another national securities exchange or Nasdaq within five business days from the date the receipts are delisted; (2) the trustee resigns and no successor trustee is appointed within 60 days from the date the trustee provides notice to the initial depositor of its intent to resign; (3) 75% of the beneficial owners of outstanding HOLDRs (*other than Merrill Lynch, Pierce, Fenner & Smith Incorporated*) vote to dissolve and liquidate the trust; or (4) December 31, 2039. If a termination event occurs, the trustee will distribute the underlying securities to the beneficial owners as promptly as practicable after the termination event.

Criteria for Continued Listing

Except as otherwise noted below, and in *Exhibit A* of NYSE 2002–15, the Exchange believes that the HOLDRs satisfy the Exchange's continued listing criteria in NYSE Rule 1202, which is generally consistent with the continued listing criteria currently used by the Amex, the Chicago Stock Exchange (the ''CHX''), the Chicago Board Options Exchange, Inc. (the ''CBOE'') and the Boston Stock Exchange (the ''BSE'').[7]

When listing TIRs under Rule 1202, the Exchange will establish a minimum number of receipts that must be outstanding at the time trading commences on the Exchange, and such minimum number will be included in any required submission to the Commission. In connection with continued listing, the Exchange will consider the suspension of trading in, or removal from listing of, a series of TIRs when any of the following circumstances arise: (1) The trust has more than 60 days remaining until termination and there have been fewer than 50 record and/or beneficial holders of the TIRs for 30 or more consecutive trading days; (2) the trust has fewer than 50,000 receipts issued and outstanding; (3) the market value of all receipts issued and outstanding is less than $1 million; or (4) such other event occurs or condition exists which, in the opinion of the Exchange, makes further dealings on the Exchange inadvisable. These flexible criteria will allow the Exchange to avoid delisting the TIRs (and possibly terminating the trust) due

[6] The Exchange represents that the number of each security represented in a receipt may change due to certain corporate events such as stock splits or reverse stock splits on the deposited securities, and the relative weightings among the deposited securities may change based on the current market price of the deposited securities. *See* NYSE Rule 1202, Supplementary Material .20.

[7] See Securities Exchange Act Release No. 41892 (September 21, 1999) 64 FR 52559 (September 29, 1999) (approving listing and trading of Trust Issued Receipts and Internet HOLDRs on the Amex); Securities Exchange Act Release No. 42056 (October 22, 1999), 64 FR 58870 (November 1, 1999) (approving listing and trading of Trust Issued Receipts and Internet HOLDRs on the CHX pursuant to UTP); Securities Exchange Act Release No. 42347 (January 18, 2000), 65 FR 4451 (January 27, 2000) (approving listing and trading of Trust Issued Receipts and Internet HOLDRs on the BSE pursuant to UTP); Securities Exchange Act Release No. 43134 (August 10, 2000), 65 FR 50255 (August 17, 2000) (approving listing standards for Trust Issued Receipts on the CBOE) and Securities Exchange Act Release No. 44908 (October 4, 2001), 66 FR 52161 (October 12, 2001) (approving listing and trading of Trust Issued Receipts and HOLDRs on the CBOE).

to relatively brief fluctuations in market conditions that may cause the number of holders to vary. However, these delisting criteria will not be applied for the initial 12-month period following formation of a trust and commencement of trading on the Exchange.

In addition, if the number of component securities drops to fewer than nine, and each time the number of component securities is reduced thereafter, the Exchange will consult with the staff of the Division of Market Regulation to confirm the appropriateness of continued listing of the TIRs.

NYSE Rule 1202 also contains specific ''generic'' listing criteria under which the Exchange may commence trading pursuant to Rule 19b–4(e). Those criteria are substantially similar to the criteria that have been applied to the initial listing of HOLDRs on the Amex. Specifically, each of the companies represented by the securities in the portfolios underlying the HOLDRs trusts (each of such companies referred to herein as a ''component security'') were required to meet the following minimum criteria when they were selected: (1) Each component security common stock was registered under Section 12 of the Exchange Act; (2) the minimum public float of each component security was at least $150 million; (3) each component security was either listed on a national securities exchange or traded on Nasdaq and was a reported national market system security; (4) the average daily trading volume for each component security was at least 100,000 shares during the preceding sixty-day trading period; and (5) the average daily dollar value of the component security traded during the preceding sixty-day trading period was at least $1 million. The initial weighting of each component security in the portfolio was based on its market capitalization; however, if on the date such weighting was determined, a component security represented more than 20% of the overall value of the receipt, then the amount of such component security was to be reduced to no more than 20% of the receipt value.

Based on the fact that each of the HOLDRs was initially listed on the Amex, the Exchange assumes that each component security met the criteria described above. Presently, however, the Exchange represents that each of the HOLDRs that the Exchange proposes to trade on a UTP basis has one or more component securities that fail to meet the minimum criteria set forth above. As a result, while the HOLDRs are substantially in compliance with the aforementioned minimum standards, the HOLDRs do not satisfy the Exchange's generic standards for listing and trading TIRs pursuant to Rule 19b–4(e). Specifically, one or more component securities of each HOLDR do not meet the minimum public float requirement in clause (2) above and/or the average daily dollar value requirement in clause (5) above, as more specifically described in *Exhibit A* attached to NYSE 2002–15.[8]

Notwithstanding that fact, the Exchange believes that its proposal to trade the HOLDRs on a UTP basis is appropriate, and thus should be approved. The HOLDRs continue to be substantially in compliance with the minimum initial listing criteria listed above, and thus, are substantially similar to products previously approved by the Commission. These HOLDRs also continue to be traded on the Amex, on several regional exchanges and in the over-the-counter market. Permitting the Exchange to trade these HOLDRs on a UTP basis will afford investors the advantage of an additional market on which to trade the HOLDRs, and avoid the unfair discrimination against the Exchange that would otherwise result from precluding the Exchange from trading these securities while the aforementioned markets continue to do so.

2. Statutory Basis

The Exchange believes that the basis under the Act for this proposed rule change is the requirement under section 6(b)(5) of the Act,[9] which provides that an exchange have rules that are designed to prevent fraudulent and manipulative acts and practices, to promote just and equitable principles of trade, to remove impediments to, and perfect the mechanism of a free and open market and, in general, to protect investors and the public interest.

III. Solicitation of Comments

Interested persons are invited to submit written data, views and arguments concerning the foregoing, including whether the proposed rule change, as amended, is consistent with the Act. Persons making written submissions should file six copies thereof with the Secretary, Securities and Exchange Commission, 450 Fifth Street, NW, Washington, DC 20549–0609. Copies of the submission, all subsequent amendments, all written statements with respect to the proposed rule change that are filed with the Commission, and all written communications relating to the proposed rule change between the Commission and any person, other than those that may be withheld from the public in accordance with the provisions of 5 U.S.C. 552, will be available for inspection and copying at the Commission's Public Reference Room. Copies of such filing will also be available for inspection and copying at the principal office of the NYSE. All submissions should refer to File No. SR–NYSE–2002–15 and should be submitted by May 8, 2002.

IV. Commission's Findings and Order Granting Accelerated Approval of Proposed Rule Change

After careful review, the Commission finds that the proposed rule change is consistent with the requirements of section 6(b)(5) of the Act[10] and the rules and regulations thereunder applicable to a national securities exchange. Specifically, the Commission finds that this proposal, which establishes standards for trading the HOLDRs, pursuant to UTP, will provide investors with a convenient and less expensive way of participating in the securities markets. The Exchange's proposal should advance the public interest by providing investors with increased flexibility in satisfying their investment needs by allowing them to purchase and sell a single security replicating the performance of a broad portfolio of stocks at negotiated prices throughout the business day. Accordingly, the Commission finds that the Exchange's proposal will facilitate transactions in securities, remove impediments to and perfect the mechanism of a free and open market and a national market system, and, in general, protect investors and the public interest, and is not designed to permit unfair discrimination between customers, issuers, brokers, or dealers.[11]

As noted in the Amex approval order, the Commission believes that HOLDRs will provide investors with an alternative to trading a broad range of securities on an individual basis, and will give investors the ability to trade the HOLDRs representing a portfolio of securities continuously throughout the business day in secondary market

[8] The following component securities are at issue: (1) Broadband: CMTN and NXTV; (2) B2B Internet: IMGX, PPRO, SCNT, SOST, VERT, and NXPS; (3) Europe 2001: AUTN, BKHM, JAZZ, KQIP, and SNRA; (4) Internet Infrastructure: INAP, NAVI, and VITR; (5) Market 2000: OOM; (6) Wireless: NTRO; and (7) Telecom: MCLDQ. For further details of each component security, *see* SR–NYSE–2002–15, *Exhibit A*.

[9] 15 U.S.C. 78f(b)(5).

[10] 15 U.S.C. 78f(b)(5).

[11] In approving this rule, the Commission notes that it has also considered the proposed rule's impact on efficiency, competition, and capital formation. 15 U.S.C. 78c(f).

transactions at negotiated prices. The HOLDRs will allow investors to: (1) Respond quickly to changes in the overall securities markets generally and for the industry represented by a particular trust; (2) trade, at a price disseminated on a continuous basis, a single security representing a portfolio of securities that the investor owns beneficially; (3) engage in hedging strategies similar to those used by institutional investors; (4) reduce transaction costs for trading a portfolio of securities; and (5) retain beneficial ownership of the securities underlying the HOLDRs.

Although the HOLDRs are not leveraged instruments, and therefore do not possess any of the attributes of stock index options, their prices will be derived and based upon the securities held in their respective trusts. Accordingly, the level of risk involved in the purchase or sale of TIRs is similar to the risk involved in the purchase or sale of traditional common stock, with the exception that the pricing mechanism for TIRs is based on a basket of securities.[12]

Trading of the HOLDRs pursuant to UTP

The Commission finds that the NYSE's proposal contains adequate rules and procedures to govern the trading of the HOLDRs pursuant to UTP. The HOLDRs are equity securities that will be subject to the full panoply of NYSE rules governing the trading of equity securities on the NYSE,[13] including, among others, rules governing the priority, parity and precedence of orders, responsibilities of the specialist, account opening and customer suitability requirements, and the election of a stop or limit order.[14] TIRs, including these HOLDRs, trade in the expanded blue room, shared only by exchange traded funds (''ETFs'').[15]

In addition, the NYSE has developed specific listing and delisting criteria for the HOLDRs that will help to ensure that a minimum level of liquidity will exist for the HOLDRs to allow for the maintenance of fair and orderly markets. The delisting criteria also allow the NYSE to consider the suspension of trading and the delisting of a HOLDR if an event occurred that made further dealings in such securities inadvisable. This will give the NYSE flexibility to delist the HOLDRs if circumstances warrant such action. The NYSE's proposal also provides procedures to halt trading in the HOLDRs in certain enumerated circumstances.

Moreover, in approving this proposal, the Commission notes the Exchange's belief that the HOLDRs will not trade at a material discount or premium in relation to the overall value of the trusts' assets because of potential arbitrage opportunities. The Exchange also represents that the potential for arbitrage should keep the market price of a HOLDR comparable to the overall value of the deposited securities.

Furthermore, the Commission believes that the Exchange's proposal to trade the HOLDRs should enhance market liquidity, and should promote more accurate pricing, tighter quotations, and reduced price fluctuations. The Commission also believes that such trading should allow customers to receive the best possible execution of their transactions in the HOLDRs.

Finally, the NYSE will apply surveillance procedures for the HOLDRs that will be similar to the procedures used for investment company units and will incorporate and rely upon existing NYSE surveillance procedures governing equities. The Commission believes that these surveillance procedures are adequate to address concerns associated with the trading of the HOLDRS pursuant to UTP, including any concerns associated with purchasing and redeeming round-lots of 100 receipts. Accordingly, the Commission believes that the rules governing the trading of the HOLDRs provide adequate safeguards to prevent manipulative acts and practices and to protect investors and the public interest.

Disclosure and Dissemination of Information

The Commission believes that the Exchange's proposal will ensure that investors have information that will allow them to be adequately apprised of the terms, characteristics, and risks of trading the HOLDRs. The prospectus will address the special characteristics of a particular HOLDR basket, including a statement regarding its redeemability and method of creation. The Commission notes that all investors in the HOLDRs who purchase in the initial offering will receive a prospectus. In addition, anyone purchasing a HOLDR directly from the trust (by delivering the underlying securities to the trust) will also receive a prospectus. Finally, all NYSE member firms that purchase the HOLDRs from the trust for resale to customers must deliver a prospectus to such customers.

The Commission also notes that prior to the commencement of trading the HOLDRs, the Exchange will issue a circular to its members explaining the unique characteristics and risks of this type of security. The circular also will note the Exchange members' prospectus delivery requirements, and highlight the characteristics of purchases in HOLDRs, including that the HOLDRs are not individually redeemable. The circular also will inform members of Exchange policies regarding trading halts in HOLDRs.

As described above, the Commission has previously approved similar Amex, CHX, and Pacific Exchange, Inc. rules that permit the listing and trading of individual TIRs, including the trading of TIRs pursuant to UTP. In approving these securities for trading, the Commission considered their structure, their usefulness to investors and the markets, and the Exchanges' rules and surveillance programs that govern their trading.

The Commission notes that the HOLDRs that NYSE proposes to trade pursuant to UTP currently trade on other securities exchanges. The Commission therefore believes that it is appropriate to approve these HOLDRs for trading pursuant to UTP on the NYSE, as their trading should produce the same benefits to the NYSE and to investors.

The NYSE has requested that the Commission find good cause for approving the proposed rule change prior to the thirtieth day after the date of publication of notice in the **Federal Register**. The Commission believes that the Exchange's proposal to trade the HOLDRs pursuant to UTP will provide investors with a convenient and less expensive way of participating in the securities markets. The Commission believes that the proposed rule change, as amended, could produce added benefits to investors through the

[12] The Commission has concerns about continued trading of TIRs whether listed or pursuant to UTP, if the number of component securities fails to reflect a cross section of the selected industry. Accordingly, the NYSE has represented that it would consult the Commission concerning continued trading, once the trust has fewer than nine component securities, and for each subsequent loss of a security thereafter.

[13] The Commission notes that the amendments to NYSE trading rules are substantially similar to changes approved for the trading of exchange-traded funds. See Securities Exchange Act Release No. 44616 (July 30, 2001), 66 FR 40761 (August 3, 2001).

[14] Trading rules pertaining to the availability of odd-lot trading do not apply because the Holders only can be traded in round-lots or round-lot multiples.

[15] Telephone conversation between James F. Duffy, Senior Vice President and Associate General Counsel, Office of the General Counsel, NYSE, and Florence E. Harmon, Senior Special Counsel, Division, Commission (April 10, 2002). If TIRs and ETFs were to trade on a floor that was not physically separated from the trading of the underlying component securities, the Commission notes that the NYSE would have to file a proposed rule change pursuant to Section 19(b) of the Act. 15 U.S.C. 78s(b).

increased competition between other market centers trading the product. Specifically, the Commission believes that by increasing the availability of the HOLDRs as an investment tool, the NSYE's proposal should help provide investors with increased flexibility in satisfying their investment needs, by allowing them to purchase and sell a single security replicating the performance of a broad portfolio of stocks at negotiated prices throughout the business day.

As noted above, the Commission has approved the listing and trading of HOLDRs at other securities exchanges, under rules that are substantially similar to the NYSE rules.[16] The Commission published those rules in the **Federal Register** for the full notice and comment period. No comments were received on the proposed rules, and the Commission found them consistent with the Act.[17] The HOLDRs at issue are currently trading on other securities exchanges pursuant to UTP. The Commission does not believe that trading of this product raises novel regulatory issues that were not addressed in the previous filings. Accordingly, the Commission finds good cause for approving the proposed rule change prior to the thirtieth day after the date of publication of notice in the **Federal Register**.

V. Conclusion

It is therefore ordered, pursuant to section 19(b)(2) of the Act,[18] that the proposed rule change (SR–NYSE–2002–15) is hereby approved on an accelerated basis.

For the Commission, by the Division of Market Regulation, pursuant to delegated authority.[19]

Margaret H. McFarland,

Deputy Secretary.

[FR Doc. 02–9314 Filed 4–16–02; 8:45 am]

BILLING CODE 8010–01–P

[16] *See* note 7, *supra.*

[17] *Id.*

[18] 15 U.S.C. 78s(b)(2).

[19] 17 CFR 200.30–3(a)(12).

SECURITIES AND EXCHANGE COMMISSION

[Release No. 34–45737; File No. SR–PCX–00–45]

Self Regulatory Organizations; Pacific Exchange, Inc.; Order Approving Proposed Rule Change and Notice of Filing and Order Granting Accelerated Approval to Amendment No. 1 to the Proposed Rule Change Relating to the Expansion of the Equity Hedge Exemption From Position and Exercise Limits

April 11, 2002.

I. Introduction

On December 11, 2000, the Pacific Exchange, Inc. (''PCX'' or ''Exchange'') filed with the Securities and Exchange Commission (''Commission''), pursuant to section 19(b)(1) of the Securities Exchange Act of 1934 (''Act'')[1] and Rule 19b–4 thereunder,[2] a proposed rule change to expand the current equity hedge exemption to eliminate position and exercise limits for certain qualified hedge strategies. The proposed rule change was published for comment in the **Federal Register** on August 17, 2001.[3] The Commission received no comments on the proposal. On April 9, 2002, the PCX submitted Amendment No. 1 to the proposal.[4]

II. Description of the Proposal

The Exchange is proposing to eliminate position and exercise limits when certain qualified strategies are employed to establish a hedged equity option position and to establish a position and exercise limit of five times the standard limit for those strategies that include an OTC option contract. Accordingly, the PCX proposes to amend Commentary .07 of Exchange Rule 6.8(a) to expand the definition of a ''qualified'' hedged position. The proposed qualified hedged strategies are as follows:

1. Where each option contract is ''hedged'' by the number of shares underlying the option contract or securities convertible into the underlying security or, in the case of an adjusted option, the same number of shares represented by the adjusted contract: (a) Long call and short stock; (b) short call and long stock; (c) long put and long stock; or (d) short put and short stock.

2. Reverse Conversions—A long call position accompanied by a short put position, where the long call expires with the short put and the strike price of the long call and short put is the same, and where each long call and short put contract is hedged with 100 shares (or other adjusted number of shares) of the underlying security or securities convertible into such underlying security.[5]

3. Conversions—A short call position accompanied by a long put position, where the short call expires with the long put and the strike price of the short call and long put is the same, and where each short call and long put contract is hedged with 100 shares (or other adjusted number of shares) of the underlying security or securities convertible into such underlying security.[6]

4. Collars—A short call position accompanied by a long put position, where the short call expires at the same time as the long put and the strike price of the short call equals or exceeds the strike price of the long put position and where each short call and long put position, is hedged with 100 shares of the underlying security (or other adjusted number of shares).[7] Neither side of the short call/long put position can be in-the-money at the time the position is established.

5. Box Spreads—A long call position accompanied by a short put position, where both the long call and short put have the same strike price, and a short call position accompanied by a long put position, where the short call and long put have the same strike price as each other, but a different strike price than the long call/short put position.

6. Back-to-Back Options—A listed option position hedged on a one-for-one basis with an over-the-counter (''OTC'') option position on the same underlying security.[8] The strike price of the listed

[1] 15 U.S.C. 78s(b)(1).

[2] 17 CFR 240.19b–4.

[3] *See* Securities Exchange Act Release No. 44680 (August 10, 2001), 66 FR 43283.

[4] *See* Letter from Cindy Sink, Senior Attorney, Regulatory Policy, PCX, to John Riedel, Attorney, Division of Market Regulation, Commission, dated April 9, 2002 (''Amendment No. 1''). In Amendment No. 1, the PCX established a position and exercise limit equal to no greater than five times the standard limit for those hedge strategies that include an OTC option component.

[5] For these strategies one of the option components can be an OTC option guaranteed or endorsed by the firm maintaining the proprietary position or carrying the customer account. Hedge transactions and positions established pursuant to these strategies and using an OTC option contract as part of the hedge are subject to a position limit equal to five times the standards limit established under Commentary .05 to PCX Rule 6.8(a). For purposes of this rule filing, an OTC option contract is defined as an option that is not listed on a National Securities Exchange or cleared at the Options Clearing Corporation.

[6] *Id.*

[7] *Id.*

[8] Hedge transactions and positions established pursuant to this strategy are subject to a position limit equal to five times the standards limit established under Commentary .05 to PCX Rule 6.8(a).

option position and corresponding OTC option position must be within one strike price interval of each other and no more than one expiration month apart.

For reverse conversion, conversion and collar strategies, one of the option components can be an OTC option guaranteed or endorsed by the firm maintaining the proprietary position or carrying the customer account.

Within the list of proposed hedge strategies eligible for the equity hedge exemption, the Exchange proposes that the option component of a reversal, a conversion or a collar position can be treated as one contract rather than as two (2) contracts. All three strategies serve to hedge a related stock portfolio. Because these strategies require the contemporaneous [9] purchase/sale of both a call and put component, against the appropriate number of shares underlying the option (generally 100 shares) the Exchange believes that the position should be treated as one contract for hedging purposes.

Under the proposed rule change, the standard position and exercise limits will remain in place for unhedged equity option positions. Once an account nears or reaches the standard limit, positions identified as a qualified hedge strategy will be exempted from position limit calculations. The exemption will be automatic (i.e. does not require pre-approval from the Exchange) to the extent that the member identifies that a pre-existing qualified hedge strategy is in place or is employed from the point that an account's position reaches the standard limit and provides the required supporting documentation to the Exchange.

The exemption will remain in effect to the extent that the exempt positions remain intact and the Exchange is provided with any required supporting documentation. Procedures to demonstrate that the option position remains qualified are similar to those currently in place. Exchange procedures currently require a qualified account to report to the Exchange hedge information each time the option position changes. Hedge information for member firm and customer accounts having 200 or more contracts are electronically reported via the Large Options Positions Report. Market maker account information is also reported to the Exchange electronically by the member's clearing firm. The existing requirement imposed on member firms to report hedge information for proprietary and customer accounts that maintain an options position in excess of 10,000 contracts will continue to apply.

[9] At or about the same time.

III. Discussion

The Commission finds that the proposed rule change is consistent with the requirements of the Act and the rules and regulations thereunder applicable to a national securities exchange [10] and, in particular, the requirements of section 6 of the Act [11] and the rules and regulations thereunder. The Commission finds specifically that the proposed rule change is consistent with section 6(b)(5) of the Act [12] in that it is designed to promote just and equitable principles of trade, to foster cooperation and coordination with persons engaged in facilitating transactions in securities, and to remove impediments to and perfect the mechanism of a free and open market and a national market system.

Position and exercise limits serve as a regulatory tool designed to address potential manipulative schemes and adverse market impact surrounding the use of options. In general, the Commission has taken a gradual, evolutionary approach toward expansion of position and exercise limits. The Commission has been careful to balance two competing concerns when considering the appropriate level at which to set position and exercise limits. The Commission has recognized that the limits must be sufficient to prevent investors from disrupting the market in the component securities comprising the indexes. At the same time, the Commission has determined that limits must not be established at levels that are so low as to discourage participation in the options market by institutions and other investors with substantial hedging needs or to prevent specialists and market makers from adequately meeting their obligations to maintain a fair and orderly market.[13]

The Commission has carefully considered the PCX's proposal to expand the hedge exemption from position and exercise limits. Given the market neutral characteristic of all the proposed qualified hedge strategies (except covered stock positions), the Commission believes it is permissible to expand the current equity hedge exemption without risk of disruption to the options or underlying cash markets. Specifically, the Commission believes that existing position and exercise limits, procedures for maintaining the exemption, and the reporting requirements imposed by the Exchange will help protect against potential manipulation. The Commission notes that the existing standard position and exercise limits will remain in place for unhedged equity option positions. To further ensure against market disruption, the PCX will establish a position and exercise limit equal to no greater than five times the standard limit for those hedge strategies that include an OTC option component.

Once an account nears or reaches the standard limit, positions identified as one or more of the proposed qualified hedge strategies will be exempted from limit calculations. Although the exemption will be automatic (*i.e.,* does not require pre-approval from the Exchange), the exemption will remain in effect only to the extent that the exempted position remains intact and that the Exchange is provided with any required supporting documentation.

In addition, as described above, a qualified account must report hedge information each time the option position changes. Hedge information for member firm and customer accounts are reported to the Exchange electronically, via the Large Options Position Report. Market maker account information is also reported to the Exchange electronically by the member's clearing firm. For those option positions that do not change, a filing is generally required on a weekly basis. Finally, the existing requirement imposed on member firms to report hedge information for proprietary and customer accounts that maintain an options position in excess of 10,000 contracts will remain in place.

The Commission believes these reporting requirements will help the PCX to monitor options positions and ensure that only qualified hedges are being exempt from position and exercise limits. To the extent that any position raises concerns, the Commission believes that the PCX, through its monitoring, will be promptly notified, and the Commission would expect the PCX to take any appropriate action, as permitted by its rules.

Finally, the Commission notes that the proposal, as amended, is substantially identical to proposed rule changes submitted by the Chicago Board Options Exchange, Inc. (''CBOE'') and the American Stock Exchange LLC (''Amex''), which the Commission has

[10] In approving this proposed rule change, the Commission notes that it has considered the proposed rule's impact on efficiency, competition, and capital formation. 15 U.S.C. 78c(f).

[11] 15 U.S.C. 78f.

[12] 15 U.S.C. 78f(b)(5).

[13] *Id.*

approved.[14] The Commission does not believe that the proposed rule changes raises novel regulatory issues that were not already addressed and should benefit Exchange members by permitting them greater flexibility in using hedge strategies advantageously, while providing an adequate level of protection against the opportunity for manipulation of these securities and disruption in the underlying market.

The Commission finds good cause, pursuant to section 19(b)(2) of the Act,[15] for approving Amendment No. 1 to the proposal prior to the thirtieth day after the date of publication of notice of filing thereof in the **Federal Register**. Amendment No. 1 establishes a position and exercise limit equal to no greater than five times the standard limit for those hedge strategies that include an OTC option component. Setting the position and exercise limit at this level should provide Exchange members greater flexibility in using hedge strategies advantageously, while providing an adequate level of protection against the opportunity for manipulation of these securities and disruption in the underlying market. Accordingly, the Commission finds good cause, consistent with sections 6(b)(5)[16] and 19(b)(2)[17] of the Act to accelerate approval of Amendment No. 1 to the proposed rule change.

IV. Solicitation of Comments

Interested persons are invited to submit written data, views, and arguments concerning Amendment No. 1, including whether it is consistent with the Act. Persons making written submissions should file six copies thereof with the Secretary, Securities and Exchange Commission, 450 Fifth Street NW., Washington, DC 20549–0609. Copies of the submission, all subsequent amendments, all written statements with respect to the proposed rule change that are filed with the Commission, and all written communications relating to the proposed rule change between the Commission and any person, other than those that may be withheld from the public in accordance with the provisions of 5 U.S.C. 552, will be available for inspection and copying in the Commission's Public Reference Room. Copies of such filing will also be available for inspection and copying at the principal office of the PCX. All submissions should refer to File No. SR–PCX–00–45 and should be submitted by May 8, 2002.

V. Conclusion

It is therefore ordered, pursuant to section 19(b)(2) of the Act,[18] that the proposed rule change (File No. SR–PCX–00–45), as amended, be and hereby is, approved.

For the Commission, by the Division of Market Regulation, pursuant to delegated authority.[19]

Margaret H. McFarland,

Deputy Secretary.

[FR Doc. 02–9308 Filed 4–16–02; 8:45 am]

BILLING CODE 8010–01–P

[14] *See* Securities Exchange Act Release No. 45650 (March 26, 2002), 67 FR 15638 (April 2, 2002) (SR–Amex–2001–72); Securities Exhange Act Release No. 44503 (March 20, 2002), 67 FR 14751 (March 27, 2002) (SR–CBOE–00–12).

[15] 15 U.S.C. 78s(b)(2).

[16] 15 U.S.C. 78f(b)(5).

[17] 15 U.S.C. 78s(b)(2).

[18] 15 U.S.C. 78s(b)(2).

[19] 17 CFR 200.30–3(a)(12).

SELECTIVE SERVICE SYSTEM

Form Submitted to the Office of Management and Budget for Extension of Clearance

The following form has been submitted to the Office of Management and Budget (OMB) for extension of clearance in compliance with the Paperwork Reduction Act (44 U.S. Chapter 35):

SSS–1

Title: The Selective Service System Registration Form.

Need and/or Use: Is used to register men and establish a data base for use in identifying manpower to the military services during a national emergency.

Respondents: All 18-year-old males who are United States citizens and those male immigrants residing in the United States at the time of their 18th birthday are required to register with the Selective Service System.

Frequency: Registration with the Selective Service System is a one-time occurrence.

Burden: A burden of 2 minutes or less on the individual respondent.

Copies of the above identified form can be obtained upon written request to: Selective Service System, Reports Clearance officer, 1515 Wilson Boulevard, Arlington, Virginia 22209–2425.

Written comments and recommendations for the proposed extension of clearance of the form should be sent within 30 days of publication of this notice, to: Selective Service System, Reports Clearance Officer, 1515 Wilson Boulevard, Arlington, Virginia 22209–2425.

A copy of the comments should be sent to: Office of Information and Regulatory Affairs, Attention: Desk Officer, Selective Service System, Office of Management and Budget, New Executive Office Building, Room 3235, Washington, DC 20503.

Dated: April 3, 2002.

Alfred Rascon,

Director.

[FR Doc. 02–9302 Filed 4–16–02; 8:45 am]

BILLING CODE 8015–01–M

SELECTIVE SERVICE SYSTEM

Forms Submitted to the Office of Management and Budget for Extension of Clearance

The following forms have been submitted to the Office of Management and Budget (OMB) for extension of clearance in compliance with the Paperwork Reduction Act (44 U.S. Chapter 35):

SSS Form No. and Title:

SSS Form 152, Alternative Service Employment Agreement

SSS Form 153, Employer Data Sheet

SSS Form 156, Skills Questionnaire

SSS Form 157, Alternative Service Job Data Form

SSS Form 160, Request for Overseas Job Assignment

SSS Form 163, Employment Verification Form

SSS Form 164, Alternative Service Worker Travel Reimbursement Request

SSS Form 166, Claim for Reimbursement for Emergency Medical Care

Copies of the above identified forms can be obtained upon written request to the Selective Service System, Reports Clearance Officer, 1515 Wilson Boulevard, Arlington, Virginia 22209–2425.

No changes have been made to the above identified forms. OMB clearance is limited to requesting a three-year extension of the current expiration dates.

Written comments should be sent within 60 days after the publication of this notice, to: Selective Service System, Reports Clearance Officer, 1515 Wilson Boulevard, Arlington, Virginia 22209–2425.

A copy of the comments should be sent to Office of Information and Regulatory Affairs, Attention: Desk Officer, Selective Service System, Office of Management and Budget, New Executive Office Building, Room 3235, Washington, DC 20435.

Dated: April 3, 2002.

Alfred Rascon,

Director.

[FR Doc. 02–9303 Filed 4–16–02; 8:45 am]

BILLING CODE 8015–01–M

DEPARTMENT OF STATE

[Public Notice 3978]

Culturally Significant Objects Imported for Exhibition; Determinations: ''Tempo''

AGENCY: Department of State.

ACTION: Notice.

SUMMARY: Notice is hereby given of the following determinations: Pursuant to the authority vested in me by the Act of October 19, 1965 (79 Stat. 985; 22 U.S.C. 2459), Executive Order 12047 of March 27, 1978, the Foreign Affairs Reform and Restructuring Act of 1998 (112 Stat. 2681, *et seq.*; 22 U.S.C. 6501 note, *et seq.*), Delegation of Authority No. 234 of October 1, 1999, and Delegation of Authority No. 236 of October 19, 1999, as amended, I hereby determine that the objects to be included in the exhibition ''Tempo,'' imported from abroad for temporary exhibition within the United States, are of cultural significance. The objects are imported pursuant to loan agreements with the foreign owners. I also determine that the exhibition or display of the exhibit objects at the Museum of Modern Art, Long Island City, New York, from on or about June 29, 2002 to on or about September 9, 2002, and at possible additional venues yet to be determined, is in the national interest. Public Notice of these Determinations is ordered to be published in the **Federal Register**.

FOR FURTHER INFORMATION CONTACT: For further information, including a list of the exhibit objects, contact David S. Newman, Attorney-Adviser, Office of the Legal Adviser, U.S. Department of State, (telephone: 202/619–6982). The address is U.S. Department of State, SA–44, 301 4th Street, SW., Room 700, Washington, DC 20547–0001.

Dated: April 10, 2002.

Patricia S. Harrison,

Assistant Secretary for Educational and Cultural Affairs, Department of State.

[FR Doc. 02–9304 Filed 4–16–02; 8:45 am]

BILLING CODE 4710–08–P

DEPARTMENT OF STATE

[Public Notice 3979]

Bureau of Political-Military Affairs; Suspension of Munitions Export Licenses to Zimbabwe

AGENCY: Department of State.

ACTION: Notice.

SUMMARY: Notice is hereby given that all licenses and approvals to export or otherwise transfer defense articles and defense services to Zimbabwe pursuant to Section 38 of the Arms Export Control Act (AECA) are suspended until further notice. Further, effective immediately, it is the policy of the U.S. Government to deny all applications for licenses and other approvals to export or otherwise transfer defense articles and defense services to Zimbabwe.

EFFECTIVE DATE: April 17, 2002.

FOR FURTHER INFORMATION CONTACT: Mary F. Sweeney, Office of Defense Trade Controls, Bureau of Political-Military Affairs, Department of State (202) 663–2700.

SUPPLEMENTARY INFORMATION: The Government of Zimbabwe has subverted the democratic process through a badly flawed presidential election, a campaign of violence and intimidation against its political opposition, and a blatant disregard for the rule of law and serious human rights abuses. Consequently, it is the policy of the Department of State to deny all applications for licenses and other approvals to export or otherwise transfer defense articles and defense services to Zimbabwe, until further notice. In addition, U.S. manufacturers and exporters and any other affected parties (*e.g.,* brokers) are hereby notified that the Department of State has suspended all licenses and approvals authorizing the export or other transfer of defense articles and defense services to Zimbabwe. The licenses and approvals that have been suspended include manufacturing licenses and technical assistance agreements involving Zimbabwe, including any agreement that has Zimbabwe as a sales territory. This action also precludes the use in connection with Zimbabwe of any exemptions from licensing or other approval requirements included in the International Traffic in Arms Regulations (ITAR) (22 CFR parts 120–130) until further notice.

In accordance with established procedures under the ITAR, exceptions to this policy will be considered on a case-by-case basis.

This action has been taken pursuant to sections 38 and 42 of the AECA (22 U.S.C. 2778, 2791) and section 126.7 of the ITAR in furtherance of the foreign policy of the United States.

Dated: April 11, 2002.

Lincoln P. Bloomfield, Jr.,

Assistant Secretary, Bureau of Political-Military Affairs, Department of State.

[FR Doc. 02–9305 Filed 4–16–02; 8:45 am]

BILLING CODE 4710–25–P

STATE JUSTICE INSTITUTE

Meeting; Sunshine Act

DATE: Friday, May 10, 2002, 9 a.m.—5 p.m.

PLACE: Allerton Crown Plaza Hotel, Chicago, IL.

Matters to be Considered:

Consideration of proposals submitted for Institute funding and internal Institute business.

Portions Open to the Public:

Consideration of proposals submitted for Institute funding and internal Institute business other than personnel matters.

Portions Closed to the Public:

Discussion of internal personnel matters.

CONTACT PERSON: David Tevelin, Executive Director, State Justice Institute, 1650 King Street, Suite 600, Alexandria, VA 22314, (703) 684–6100.

David I. Tevelin,

Executive Director.

[FR Doc. 02–9556 Filed 4–15–02; 3:57 pm]

BILLING CODE 6820–SC–M

DEPARTMENT OF TRANSPORTATION

Maritime Administration

[Docket Number: MARAD–2002–12092]

Requested Administrative Waiver of the Coastwise Trade Laws

AGENCY: Maritime Administration, Department of Transportation.

ACTION: Invitation for public comments on a requested administrative waiver of the Coastwise Trade Laws for the vessel CLEOPATRA.

SUMMARY: As authorized by Pub. L. 105–383, the Secretary of Transportation, as represented by the Maritime Administration (MARAD), is authorized to grant waivers of the U.S.-build requirement of the coastwise laws under certain circumstances. A request for such a waiver has been received by MARAD. The vessel, and a description of the proposed service, is listed below. Interested parties may comment on the effect this action may have on U.S.

vessel builders or businesses in the U.S. that use U.S.-flag vessels. If MARAD determines that in accordance with Pub. L. 105–383 and MARAD's regulations at 46 CFR part 388 (65 FR 6905; February 11, 2000) that the issuance of the waiver will have an unduly adverse effect on a U.S.-vessel builder or a business that uses U.S.-flag vessels, a waiver will not be granted.

DATES: Submit comments on or before May 17, 2002.

ADDRESSES: Comments should refer to docket number MARAD–2002–12092. Written comments may be submitted by hand or by mail to the Docket Clerk, U.S. DOT Dockets, Room PL–401, Department of Transportation, 400 7th St., SW, Washington, DC 20590–0001. You may also send comments electronically via the Internet at *http://dmses.dot.gov/submit/*. All comments will become part of this docket and will be available for inspection and copying at the above address between 10 a.m. and 5 p.m., E.T., Monday through Friday, except federal holidays. An electronic version of this document and all documents entered into this docket is available on the World Wide Web at *http://dms.dot.gov.*

FOR FURTHER INFORMATION CONTACT: Kathleen Dunn, U.S. Department of Transportation, Maritime Administration, MAR–832 Room 7201, 400 Seventh Street, SW., Washington, DC 20590. Telephone 202–366–2307.

SUPPLEMENTARY INFORMATION: Title V of Pub. L. 105–383 provides authority to the Secretary of Transportation to administratively waive the U.S.-build requirements of the Jones Act, and other statutes, for small commercial passenger vessels (no more than 12 passengers). This authority has been delegated to the Maritime Administration per 49 CFR 1.66, Delegations to the Maritime Administrator, as amended. By this notice, MARAD is publishing information on a vessel for which a request for a U.S.-build waiver has been received, and for which MARAD requests comments from interested parties. Comments should refer to the docket number of this notice and the vessel name in order for MARAD to properly consider the comments. Comments should also state the commenter's interest in the waiver application, and address the waiver criteria given in § 388.4 of MARAD'S regulations at 46 CFR part 388.

Vessel Proposed for Waiver of the U.S.-build Requirement:

(1) Name of vessel and owner for which waiver is requested. *Name of vessel:* CLEOPATRA. *Owner:* Robert S. Galloway.

(2) Size, capacity and tonnage of vessel. *According to the applicant:* ''length: 76′, breadth: 18.7′, depth: 9′. The tonnages are 85 gross and 68 net.''

(3) Intended use for vessel, including geographic region of intended operation and trade. *According to the applicant:* ''This vessel will operate for short periods of time with captain, crew, and 12 or less passengers on harbor cruises and corporate executive sightseeing tours, Bed/Breakfast, burial at sea, bay charters, Long Beach, Channel Islands, Newport Harbor, and the Pacific Ocean between Pt. Conception and San Diego and out to Catalina Island.''

(4) Date and Place of construction and (if applicable) rebuilding. *Date of construction:* 1961. *Place of construction:* Sydney, Australia.

(5) A statement on the impact this waiver will have on other commercial passenger vessel operators. *According to the applicant:* ''The impact will be negligible as we will address the charter needs of smaller groups than most of the vessels in our area. Most of the commercial passenger vessels have capacities of 50 to 500 passengers.''

(6) A statement on the impact this waiver will have on U.S. shipyards. *According to the applicant:* ''There is no negative impact on our U.S. shipyards and we anticipate that all of the repair work to this vessel will be done in U.S. shipyards. A majority of the components including engines, generators, navigation equipment, propellers, running gear, etc. are all U.S. built.''

Dated: April 12, 2002.

By Order of the Maritime Administrator.

Joel C. Richard,

Secretary, Maritime Administration.

[FR Doc. 02–9316 Filed 4–16–02; 8:45 am]

BILLING CODE 4910–81–P

DEPARTMENT OF TRANSPORTATION

Maritime Administration

[Docket Number: MARAD–2002–12094]

Requested Administrative Waiver of the Coastwise Trade Laws

AGENCY: Maritime Administration, Department of Transportation.

ACTION: Invitation for public comments on a requested administrative waiver of the Coastwise Trade Laws for the vessel FRITHA.

SUMMARY: As authorized by Pub. L. 105–383, the Secretary of Transportation, as represented by the Maritime Administration (MARAD), is authorized to grant waivers of the U.S.-build requirement of the coastwise laws under certain circumstances. A request for such a waiver has been received by MARAD. The vessel, and a description of the proposed service, is listed below. Interested parties may comment on the effect this action may have on U.S. vessel builders or businesses in the U.S. that use U.S.-flag vessels. If MARAD determines that in accordance with Pub. L. 105–383 and MARAD's regulations at 46 CFR part 388 (65 FR 6905; February 11, 2000) that the issuance of the waiver will have an unduly adverse effect on a U.S.-vessel builder or a business that uses U.S.-flag vessels, a waiver will not be granted.

DATES: Submit comments on or before May 17, 2002.

ADDRESSES: Comments should refer to docket number MARAD–2002–12094. Written comments may be submitted by hand or by mail to the Docket Clerk, U.S. DOT Dockets, Room PL–401, Department of Transportation, 400 7th St., SW, Washington, DC 20590–0001. You may also send comments electronically via the Internet at *http://dmses.dot.gov/submit/*. All comments will become part of this docket and will be available for inspection and copying at the above address between 10 a.m. and 5 p.m., E.T., Monday through Friday, except federal holidays. An electronic version of this document and all documents entered into this docket is available on the World Wide Web at *http://dms.dot.gov*.

FOR FURTHER INFORMATION CONTACT: Kathleen Dunn, U.S. Department of Transportation, Maritime Administration, MAR–832 Room 7201, 400 Seventh Street, SW, Washington, DC 20590. Telephone 202–366–2307.

SUPPLEMENTARY INFORMATION: Title V of Pub. L. 105–383 provides authority to the Secretary of Transportation to administratively waive the U.S.-build requirements of the Jones Act, and other statutes, for small commercial passenger vessels (no more than 12 passengers). This authority has been delegated to the Maritime Administration per 49 CFR 1.66, Delegations to the Maritime Administrator, as amended. By this notice, MARAD is publishing information on a vessel for which a request for a U.S.-build waiver has been received, and for which MARAD requests comments from interested parties. Comments should refer to the docket number of this notice and the vessel name in order for MARAD to properly consider the comments. Comments should also state the commenter's interest in the waiver

application, and address the waiver criteria given in § 388.4 of MARAD'S regulations at 46 CFR part 388.

Vessel Proposed for Waiver of the U.S.-build Requirement

(1) Name of vessel and owner for which waiver is requested. *Name of vessel: FRITHA. Owner:* Philip R. Fuller.

(2) Size, capacity and tonnage of vessel. *According to the applicant:* ''Register length 57 ft., gross tonnage 39 * * * capacity 15.''

(3) Intended use for vessel, including geographic region of intended operation and trade. *According to the applicant:* ''The vessel will be used for charter and sail training on the eastern seaboard from Florida to Maine.''

(4) Date and Place of construction and (if applicable) rebuilding. *Date of construction:* 1985. *Place of construction:* Auckland, NZ.

(5) A statement on the impact this waiver will have on other commercial passenger vessel operators. *According to the applicant:* ''FRITHA is a unique vessel in that she is a brigantine of small stature with the capability to offer square sail training to a small number of people of all ages. There are only two other vessels of this type on the East Coast and both belong to educational institutions. FRITHA's participation in classic sailing events will only strengthen the already growing demand for the Tall Ship experience. Existing operators do hourly trips for great numbers of people on board. FRITHA will do weekly charters for 6 guests and daily sail training for up to 12.''

(6) A statement on the impact this waiver will have on U.S. shipyards. *According to the applicant:* ''Positive impact because the vessel will require routine maintenance and repairs.''

Dated: April 12, 2002.

By Order of the Maritime Administrator.

Joel C. Richard,

Secretary, Maritime Administration.

[FR Doc. 02–9319 Filed 4–16–02; 8:45 am]

BILLING CODE 4910–81–P

DEPARTMENT OF TRANSPORTATION

Maritime Administration

[Docket Number: MARAD–2002–12091]

Requested Administrative Waiver of the Coastwise Trade Laws

AGENCY: Maritime Administration, Department of Transportation.

ACTION: Invitation for public comments on a requested administrative waiver of the Coastwise Trade Laws for the vessel OSPREY.

SUMMARY: As authorized by Pub. L. 105–383, the Secretary of Transportation, as represented by the Maritime Administration (MARAD), is authorized to grant waivers of the U.S.-build requirement of the coastwise laws under certain circumstances. A request for such a waiver has been received by MARAD. The vessel, and a description of the proposed service, is listed below. Interested parties may comment on the effect this action may have on U.S. vessel builders or businesses in the U.S. that use U.S.-flag vessels. If MARAD determines that in accordance with Pub. L. 105–383 and MARAD's regulations at 46 CFR part 388 (65 FR 6905; February 11, 2000) that the issuance of the waiver will have an unduly adverse effect on a U.S.-vessel builder or a business that uses U.S.-flag vessels, a waiver will not be granted.

DATES: Submit comments on or before May 17, 2002.

ADDRESSES: Comments should refer to docket number MARAD–2002–12091. Written comments may be submitted by hand or by mail to the Docket Clerk, U.S. DOT Dockets, Room PL–401, Department of Transportation, 400 7th St., SW, Washington, DC 20590–0001. You may also send comments electronically via the Internet at *http://dmses.dot.gov/submit/*. All comments will become part of this docket and will be available for inspection and copying at the above address between 10 a.m. and 5 p.m., E.T., Monday through Friday, except federal holidays. An electronic version of this document and all documents entered into this docket is available on the World Wide Web at *http://dms.dot.gov.*

FOR FURTHER INFORMATION CONTACT: Kathleen Dunn, U.S. Department of Transportation, Maritime Administration, MAR–832 Room 7201, 400 Seventh Street, SW, Washington, DC 20590. Telephone 202–366–2307.

SUPPLEMENTARY INFORMATION: Title V of Pub. L. 105–383 provides authority to the Secretary of Transportation to administratively waive the U.S.-build requirements of the Jones Act, and other statutes, for small commercial passenger vessels (no more than 12 passengers). This authority has been delegated to the Maritime Administration per 49 CFR § 1.66, Delegations to the Maritime Administrator, as amended. By this notice, MARAD is publishing information on a vessel for which a request for a U.S.-build waiver has been received, and for which MARAD requests comments from interested parties. Comments should refer to the docket number of this notice and the vessel name in order for MARAD to properly consider the comments. Comments should also state the commenter's interest in the waiver application, and address the waiver criteria given in 388.4 of MARAD'S regulations at 46 CFR part 388.

Vessel Proposed for Waiver of the U.S.-build Requirement

(1) Name of vessel and owner for which waiver is requested.

Name of vessel: OSPREY. *Owner*: John and Daalbaaleh Hutchison''

(2) Size, capacity and tonnage of vessel. *According to the applicant:* ''The Vessel is 35 feet 3 inch in overall length 12 feet in breadth. She is designed to sleep 6 persons with two double berths and two singles * * * I have calculated the tonnage * * * to be 13 gross tons.''

(3) Intended use for vessel, including geographic region of intended operation and trade. *According to the applicant:* ''I intend to use this vessel for ecotourism charter work out of Kachemak Bay, Homer, Alaska. Charters will include Kachemak Bay, Cook Inlet, and will be limited to the inland waters of the Kenai Peninsula Borough Alaska.''

(4) Date and Place of construction and (if applicable) rebuilding. *Date of construction:* 1980. *Place of construction:* Richmond B.C. Canada.

(5) A statement on the impact this waiver will have on other commercial passenger vessel operators. *According to the applicant:* ''The charter boat operations based in Homer Alaska are primarily power driven fishing charters with the exception of ''Glacier Voyages'' who are operating a 58′ motorsailer for six passengers and a crew of 3. My 35″ sailboat in comparison is limited in size, speed and accommodations * * * I believe that the sailing experience offered on my 35″ sailboat will attract a distinctly different clientele than those who charter a 58′ motorsailer that is fully crewed and offering luxury accommodations. Neither of these sailing operations impacts the fishing charters.''

(6) A statement on the impact this waiver will have on U.S. shipyards. *According to the applicant:* ''Since this is a used boat manufactured in 1980, of a model/design not manufactured by U.S. companies, I feel that my purchase of this vessel had no negative impact on U.S. shipyards. In fact it seems my initial investment in this sailboat has created a considerable cash flow from me to U.S. companies who supply marine equipment.''

Dated: April 12, 2002.

By Order of the Maritime Administrator.

Joel C. Richard,

Secretary, Maritime Administration.

[FR Doc. 02–9318 Filed 4–16–02; 8:45 am]

BILLING CODE 4910–81–P

DEPARTMENT OF TRANSPORTATION

Maritime Administration

[Docket Number: MARAD–2002–12093]

Requested Administrative Waiver of the Coastwise Trade Laws

AGENCY: Maritime Administration, Department of Transportation.

ACTION: Invitation for public comments on a requested administrative waiver of the Coastwise Trade Laws for the vessel REBEL II.

SUMMARY: As authorized by Pub. L. 105–383, the Secretary of Transportation, as represented by the Maritime Administration (MARAD), is authorized to grant waivers of the U.S.-build requirement of the coastwise laws under certain circumstances. A request for such a waiver has been received by MARAD. The vessel, and a description of the proposed service, is listed below. Interested parties may comment on the effect this action may have on U.S. vessel builders or businesses in the U.S. that use U.S.-flag vessels. If MARAD determines that in accordance with Pub. L. 105–383 and MARAD's regulations at 46 CFR part 388 (65 FR 6905; February 11, 2000) that the issuance of the waiver will have an unduly adverse effect on a U.S.-vessel builder or a business that uses U.S.-flag vessels, a waiver will not be granted.

DATES: Submit comments on or before May 17, 2002.

ADDRESSES: Comments should refer to docket number MARAD–2002–12093. Written comments may be submitted by hand or by mail to the Docket Clerk, U.S. DOT Dockets, Room PL–401, Department of Transportation, 400 7th St., SW., Washington, DC 20590–0001. You may also send comments electronically via the Internet at *http://dmses.dot.gov/submit/.* All comments will become part of this docket and will be available for inspection and copying at the above address between 10 a.m. and 5 p.m., E.T., Monday through Friday, except federal holidays. An electronic version of this document and all documents entered into this docket is available on the World Wide Web at *http://dms.dot.gov.*

FOR FURTHER INFORMATION CONTACT: Kathleen Dunn, U.S. Department of Transportation, Maritime Administration, MAR–832 Room 7201, 400 Seventh Street, SW., Washington, DC 20590. Telephone 202–366–2307.

SUPPLEMENTARY INFORMATION: Title V of Pub. L. 105–383 provides authority to the Secretary of Transportation to administratively waive the U.S.-build requirements of the Jones Act, and other statutes, for small commercial passenger vessels (no more than 12 passengers). This authority has been delegated to the Maritime Administration per 49 CFR 1.66, Delegations to the Maritime Administrator, as amended. By this notice, MARAD is publishing information on a vessel for which a request for a U.S.-build waiver has been received, and for which MARAD requests comments from interested parties. Comments should refer to the docket number of this notice and the vessel name in order for MARAD to properly consider the comments. Comments should also state the commenter's interest in the waiver application, and address the waiver criteria given in § 388.4 of MARAD'S regulations at 46 CFR part 388.

Vessel Proposed for Waiver of the U.S.-build Requirement:

(1) Name of vessel and owner for which waiver is requested. *Name of vessel:* REBEL II. *Owner:* Charlie Kahn.

(2) Size, capacity and tonnage of vessel. *According to the applicant:* ''32′...12.74 gross tons...''

(3) Intended use for vessel, including geographic region of intended operation and trade. *According to the applicant:* ''I intend to use the vessel in near coastal trade, specifically as an uninspected passenger vessel engaged in charter boat fishing. There will be six or fewer passengers and I will be operating in the near coastal waters of the Gulf of Mexico, within a 50 mile radius of Port Aransas, TX.''

(4) Date and Place of construction and (if applicable) rebuilding. *Date of construction:* 1966. Place of construction: unknown.

(5) A statement on the impact this waiver will have on other commercial passenger vessel operators. *According to the applicant:* ''I do not believe that the granting of this waiver will cause any adverse effects to other vessels or operators or their operations. There are a large number of uninspected charter fishing boat operations in this area. Most of these are single vessel businesses engaged in a highly seasonal tourist oriented industry. The primary impact on this type of business is the seasonal nature of the business * * * I have been in this business for some time and have an established clientele, thus minimizing adverse impacts to others.''

(6) A statement on the impact this waiver will have on U.S. shipyards. *According to the applicant:* ''The granting of this waiver will have no impact on U.S. shipyards.''

Dated: April 12, 2002.

By Order of the Maritime Administrator.

Joel C. Richard,

Secretary, Maritime Administration.

[FR Doc. 02–9315 Filed 4–16–02; 8:45 am]

BILLING CODE 4910–81–P

DEPARTMENT OF TRANSPORTATION

Maritime Administration

[Docket Number: MARAD–2002–12095]

Requested Administrative Waiver of the Coastwise Trade Laws

AGENCY: Maritime Administration, Department of Transportation.

ACTION: Invitation for public comments on a requested administrative waiver of the Coastwise Trade Laws for the vessel SEBIM.

SUMMARY: As authorized by Pub. L. 105–383, the Secretary of Transportation, as represented by the Maritime Administration (MARAD), is authorized to grant waivers of the U.S.-build requirement of the coastwise laws under certain circumstances. A request for such a waiver has been received by MARAD. The vessel, and a description of the proposed service, is listed below. Interested parties may comment on the effect this action may have on U.S. vessel builders or businesses in the U.S. that use U.S.-flag vessels. If MARAD determines that in accordance with Pub. L. 105–383 and MARAD's regulations at 46 CFR part 388 (65 FR 6905; February 11, 2000) that the issuance of the waiver will have an unduly adverse effect on a U.S.-vessel builder or a business that uses U.S.-flag vessels, a waiver will not be granted.

DATES: Submit comments on or before May 17, 2002.

ADDRESSES: Comments should refer to docket number MARAD–2002–12095. Written comments may be submitted by hand or by mail to the Docket Clerk, U.S. DOT Dockets, Room PL–401, Department of Transportation, 400 7th St., SW, Washington, DC 20590–0001. You may also send comments electronically via the Internet at *http://dmses.dot.gov/submit/.* All comments will become part of this docket and will be available for inspection and copying at the above address between 10 a.m. and 5 p.m., E.T., Monday through Friday, except federal holidays. An electronic version of this document and

all documents entered into this docket is available on the World Wide Web at *http://dms.dot.gov*.

FOR FURTHER INFORMATION CONTACT: Kathleen Dunn, U.S. Department of Transportation, Maritime Administration, MAR–832 Room 7201, 400 Seventh Street, SW, Washington, DC 20590. Telephone 202–366–2307.

SUPPLEMENTARY INFORMATION: Title V of Pub. L. 105–383 provides authority to the Secretary of Transportation to administratively waive the U.S.-build requirements of the Jones Act, and other statutes, for small commercial passenger vessels (no more than 12 passengers). This authority has been delegated to the Maritime Administration per 49 CFR 1.66, Delegations to the Maritime Administrator, as amended. By this notice, MARAD is publishing information on a vessel for which a request for a U.S.-build waiver has been received, and for which MARAD requests comments from interested parties. Comments should refer to the docket number of this notice and the vessel name in order for MARAD to properly consider the comments. Comments should also state the commenter's interest in the waiver application, and address the waiver criteria given in § 388.4 of MARAD'S regulations at 46 CFR part 388.

Vessel Proposed for Waiver of the U.S.-build Requirement

(1) Name of vessel and owner for which waiver is requested. *Name of vessel:* SEBIM. *Owner:* Port Monmouth Enterprises Inc.

(2) Size, capacity and tonnage of vessel. *According to the applicant:* ''She is 45.5′ in length and measures 18 tons gross, 16 net * * * She is capable of carrying twelve (12) persons.''

(3) Intended use for vessel, including geographic region of intended operation and trade. *According to the applicant:* ''It is our hope to cruise aboard SEBIM along the east coast for part of every year and our intention would be to supplement our incomes by chartering SEBIM occasionally as a six passenger day charter vessel or carry overnight guests. As SEBIM is a classic schooner rigged yacht, we would also like to participate in sail training activities such as OpSail or ASTA events from time to time.'' ''Our cruising/charter areas of operation will hopefully be from the Maine coast as far south as the east and west coasts of Florida and the Keys, including the waters of Cape Cod, Long Island Sound, Chesapeake Bay, the Intracoastal waterway, and our home waters of New York City and Sandy Hook Bay.''

(4) Date and Place of construction and (if applicable) rebuilding. *Date of construction:* 1973. *Place of construction:* Chester, Nova Scotia, Canada.

(5) A statement on the impact this waiver will have on other commercial passenger vessel operators. *According to the applicant:* ''Overall, given the casual and part time nature of our proposed enterprise, I do not foresee any measurable impact on other commercial operators, most of whom operate well above the six passenger limit.''

(6) A statement on the impact this waiver will have on U.S. shipyards. *According to the applicant:* ''The occasional presence of another six passenger, uninspected vessel would be insignificant and would certainly have no impact on the U.S builders of these large passenger schooners or their operators.''

Dated: April 12, 2002.

By Order of the Maritime Administrator.

Joel C. Richard,

Secretary, Maritime Administration.

[FR Doc. 02–9317 Filed 4–16–02; 8:45 am]

BILLING CODE 4910–81–P

DEPARTMENT OF THE TREASURY

Submission for OMB Review; Comment Request

April 10, 2002.

The Department of the Treasury has submitted the following public information collection requirement(s) to OMB for review and clearance under the Paperwork Reduction Act of 1995, Public Law 104–13. Copies of the submission(s) may be obtained by calling the Treasury Bureau Clearance Officer listed. Comments regarding this information collection should be addressed to the OMB reviewer listed and to the Treasury Department Clearance Officer, Department of the Treasury, Room 2110, 1425 New York Avenue, NW., Washington, DC 20220.

DATES: Written comments should be received on or before May 17, 2002, to be assured of consideration.

U.S. Customs Service (CUS)

OMB Number: 1515–0026.

Form Number: Customs Form 3078.

Type of Review: Extension.

Title: Application for Identification Card.

Description: Customs Form 3078 is used by licensed Cartman, Lighterman, Warehouseman, brokerage firms, foreign trade zones, container station operators, their employees, and employees requiring access to Customs secure areas to apply for an identification card so they may legally handle merchandise in Customs custody.

Respondents: Business or other for-profit, Individuals or households.

Estimated Number of Respondents: 30,000.

Estimated Burden Hours Per Respondent: 15 minutes.

Frequency of Response: On occasion.

Estimated Total Reporting Burden: 9,750 hours.

Clearance Officer: Tracey Denning, U.S. Customs Service, Information Services Branch, Ronald Reagan Building, 1300 Pennsylvania Avenue, NW., Room 3.2.C, Washington, DC 20229, (202) 927–1429.

OMB Reviewer: Alexander T. Hunt, Office of Management and Budget, Room 10202, New Executive Office Building, Washington, DC 20503, (202) 395–7860.

Lois K. Holland,

Departmental Reports Management Officer.

[FR Doc. 02–9253 Filed 4–16–02; 8:45 am]

BILLING CODE 4820–02–P

DEPARTMENT OF THE TREASURY

Submission for OMB Review; Comment Request

April 10, 2002.

The Department of the Treasury has submitted the following public information collection requirement(s) to OMB for review and clearance under the Paperwork Reduction Act of 1995, Public Law 104–13. Copies of the submission(s) may be obtained by calling the Treasury Bureau Clearance Officer listed. Comments regarding this information collection should be addressed to the OMB reviewer listed and to the Treasury Department Clearance Officer, Department of the Treasury, Room 2110, 1425 New York Avenue, NW., Washington, DC 20220.

DATES: Written comments should be received on or before May 17, 2002, to be assured of consideration.

Internal Revenue Service (IRS)

OMB Number: 1545–0879.

Regulation Project Number: IA–195–78 Final.

Type of Review: Extension.

Title: Certain Returned Magazines, Paperbacks or Records.

Description: The regulations provide rules relating to an exclusion from gross income for certain returned merchandise. The regulations provide that in addition to physical return of the merchandise, a written statement listing certain information may constitute

evidence of the return. Taxpayers who receive physical evidence of the return may, in lieu of retaining physical evidence, retain documentary evidence of the return. Taxpayers in the trade or business of selling magazines, paperbacks, or records, who elect to use a certain method of accounting, are affected.

Respondents: Business or other for-profit.

Estimated Number of Recordkeepers: 19,500.

Estimated Burden Hours Per Respondent/Recordkeeper: 25 minutes.

Estimated Total Recordkeeping Burden: 8,125 hours.

OMB Number: 1545–1269.

Regulation Project Number: PS–7–90 Final.

Type of Review: Extension.

Title: Nuclear Decommissioning Fund Qualification Requirements.

Description: If a taxpayer requests, in connection with a request for a schedule of ruling amounts, a ruling as to the classification of certain unincorporated organizations, the taxpayer is required to submit a copy of the documents establishing or governing the organization.

Respondents: Business or other for-profit.

Estimated Number of Respondents: 50.

Estimated Burden Hours Per Respondent: 3 hours.

Frequency of Response: On occasion.

Estimated Total Reporting Burden: 150 hours.

OMB Number: 1545–1484.

Regulation Project Number: REG–242282–97 (formerly INTL–62–90, INTL–32–93, INTL–52–86 and INTL–52–94) Final.

Type of Review: Extension.

Title: General Revision of Regulations Relating to Withholding of Tax on Certain U.S. Source Income Paid to Foreign Persons and Related Collection, Refunds, and Credits; Revision of Information of Information Reporting and Backup Withholding Regulations; and Removal of Regulations Under Part 35a and of Certain Regulations Under Income Tax Treaties.

Description: The regulations are needed to provide guidance relating to the withholding of income of nonresident alien individuals and foreign corporations.

Respondents: Business or other for-profit, Individuals or households, Not-for-profit institutions, Farms, Federal Government, State, Local or Tribal Government.

Estimated Number of Respondents/Recordkeepers: 1.

Estimated Burden Hours Per Respondent/Recordkeeper: 1 hour.

Frequency of Response: On occasion.

Estimated Total Reporting/Recordkeeping Burden: 1 hour.

OMB Number: 1545–1581.

Regulation Project Number: REG–209485–86 Final.

Type of Review: Extension.

Title: Continuation Coverage Requirements Applicable to Group Health Plans.

Description: The statute and the regulations require group health plans to provide notices to individuals who are entitled to elect the Consolidated Omnibus Budget Reconciliation Act of 1985 (COBRA) continuation coverage of their election rights. Individuals who wish to obtain the benefits provided under the statute are required to provide plans notices in the cases of divorce from the covered employee, a dependent child's ceasing to be a dependent under the terms of the plan, and disability. Most plans will require that elections of COBRA continuation coverage be made in writing. In cases where qualified beneficiaries are short by an insignificant amount in a payment made to the plan, the regulations require the plan to notify the qualified beneficiary if the plan does not wish to treat the tendered payment as full payment. If a health care provider contacts a plan to confirm coverage of a qualified beneficiary, the regulations require that the plan disclose the qualified beneficiary's complete rights to coverage.

Respondents: Business or other for-profit, Individuals or households, Not-for-profit institutions.

Estimated Number of Respondents: 1,800,000.

Estimated Burden Hours Per Respondent: 14 minutes.

Frequency of Response: On occasion.

Estimated Total Reporting Burden: 404,640 hours.

OMB Number: 1545–1646.

Regulation Project Number: REG–209060–86 Final.

Type of Review: Extension.

Title: Return Requirement for United States Persons Who Acquire or Dispose of an Interest in a Foreign Partnership, or Whose Proportional Interest in a Foreign Partnership Changes Substantially.

Description: Section 6046A requires U.S. persons to provide certain information with respect to the acquisition or disposition of a 10-percent interest in, or a 10-percent change in ownership of, a foreign partnership. This regulation provides reporting rules to identify U.S. persons with significant interests in foreign partnerships to ensure the correct reporting of items with respect to these interests.

Respondents: Business or other for-profit, Individuals or households, Not-for-profit institutions.

Estimated Number of Respondents: 1.

Estimated Burden Hours Per Respondent: 89 hours, 15 minutes (For Form 8865).

Frequency of Response: On occasion, Annually.

Estimated Total Reporting Burden: 1 hour.

Clearance Officer: Glenn P. Kirkland, Internal Revenue Service, Room 6411, 1111 Constitution Avenue, NW., Washington, DC 20224.

OMB Reviewer: Alexander T. Hunt, Office of Management and Budget, Room 10202, New Executive Office Building, Washington, DC 20503, (202) 395–7860.

Mary A. Able,

Departmental Reports Management Officer.

[FR Doc. 02–9320 Filed 4–16–02; 8:45 am]

BILLING CODE 4830–01–P

DEPARTMENT OF THE TREASURY

Internal Revenue Service

Proposed Collection; Comment Request for Form 8801

AGENCY: Internal Revenue Service (IRS), Treasury.

ACTION: Notice and request for comments.

SUMMARY: The Department of the Treasury, as part of its continuing effort to reduce paperwork and respondent burden, invites the general public and other Federal agencies to take this opportunity to comment on proposed and/or continuing information collections, as required by the Paperwork Reduction Act of 1995, Public Law 104–13 (44 U.S.C. 3506(c)(2)(A)). Currently, the IRS is soliciting comments concerning Form 8801, Credit For Prior Year Minimum Tax—Individuals, Estates and Trusts.

DATES: Written comments should be received on or before June 17, 2002, to be assured of consideration.

ADDRESSES: Direct all written comments to Glenn Kirkland, Internal Revenue Service, room 6411, 1111 Constitution Avenue NW., Washington, DC 20224.

FOR FURTHER INFORMATION CONTACT: Requests for additional information or copies of the form and instructions should be directed to Allan Hopkins, (202) 622–6665, or through the internet

(Allan.M.Hopkins@irs.gov), Internal Revenue Service, Room 6407, 1111 Constitution Avenue NW., Washington, DC 20224.

SUPPLEMENTARY INFORMATION:

Title: Credit For Prior Year Minimum Tax—Individuals, Estates and Trusts.

OMB Number: 1545–1073.

Form Number: 8801.

Abstract: Form 8801 is used by individuals, estates, and trusts to compute the minimum tax credit, if any, available from a tax year beginning after 1986 to be used in the current year or to be carried forward for use in a future year.

Current Actions: There are no changes being made to Form 8801 at this time.

Type of Review: Extension of a currently approved collection.

Affected Public: Individuals or households.

Estimated Number of Respondents: 38,744.

Estimated Time Per Respondent: 5 hr., 52 min.

Estimated Total Annual Burden Hours: 227,040.

The following paragraph applies to all of the collections of information covered by this notice:

An agency may not conduct or sponsor, and a person is not required to respond to, a collection of information unless the collection of information displays a valid OMB control number. Books or records relating to a collection of information must be retained as long as their contents may become material in the administration of any internal revenue law. Generally, tax returns and tax return information are confidential, as required by 26 U.S.C. 6103.

Request for Comments: Comments submitted in response to this notice will be summarized and/or included in the request for OMB approval. All comments will become a matter of public record. Comments are invited on: (a) Whether the collection of information is necessary for the proper performance of the functions of the agency, including whether the information shall have practical utility; (b) the accuracy of the agency's estimate of the burden of the collection of information; (c) ways to enhance the quality, utility, and clarity of the information to be collected; (d) ways to minimize the burden of the collection of information on respondents, including through the use of automated collection techniques or other forms of information technology; and (e) estimates of capital or start-up costs and costs of operation, maintenance, and purchase of services to provide information.

Approved: April 10, 2002.

Glenn Kirkland,

IRS Reports Clearance Officer.

[FR Doc. 02–9357 Filed 4–16–02; 8:45 am]

BILLING CODE 4830–01–P

DEPARTMENT OF THE TREASURY

Internal Revenue Service

Proposed Collection; Comment Request for Publication 3319

AGENCY: Internal Revenue Service (IRS), Treasury.

ACTION: Notice and request for comments.

SUMMARY: The Department of the Treasury, as part of its continuing effort to reduce paperwork and respondent burden, invites the general public and other Federal agencies to take this opportunity to comment on proposed and/or continuing information collections, as required by the Paperwork Reduction Act of 1995, Public Law 104–13 (44 U.S.C. 3506(c)(2)(A)). Currently, the IRS is soliciting comments concerning Publication 3319, Low-Income Taxpayer Clinics-2002 Grant Application Package and Guidelines.

DATES: Written comments should be received on or before June 17, 2002, to be assured of consideration.

ADDRESSES: Direct all written comments to Glenn P. Kirkland, Internal Revenue Service, room 6611, 1111 Constitution Avenue NW., Washington, DC 20224.

FOR FURTHER INFORMATION CONTACT: Requests for additional information or copies of publication should be directed to Carol Savage, (202) 622–3945, or through the Internet (*CAROL.A.SAVAGE@irs.gov.)*, Internal Revenue Service, room 6407, 1111 Constitution Avenue NW., Washington, DC 20224. Copies of the publication can also be downloaded from the IRS Internet site at: *http://www.irs.gov.*

SUPPLEMENTARY INFORMATION:

Title: Low-Income Taxpayer Clinics-2002 Grant Application Package and Guidelines.

OMB Number: 1545–1648.

Publication Number: Publication 3319.

Abstract: Publication 3319 outlines requirements of the IRS Low-Income Taxpayer Clinics (LITC) program and provides instructions on how to apply for a LITC grant award. The IRS will review the information provided by applicants to determine whether to award grants for the Low-Income Taxpayer Clinics.

Current Actions: There are no changes being made to the publication at this time.

Type of Review: Extension of a currently approved collection.

Affected Public: Not for-profit institutions.

Estimated Number of Respondents: 825.

Estimated Time For Program Sponsors: 60 hours.

Estimated Time For Student and Program Participants: 2 hours.

Estimated Total Annual Burden Hours: 6,000.

The following paragraph applies to all of the collections of information covered by this notice:

An agency may not conduct or sponsor, and a person is not required to respond to, a collection of information unless the collection of information displays a valid OMB control number.

Books or records relating to a collection of information must be retained as long as their contents may become material in the administration of any internal revenue law. Generally, tax returns and tax return information are confidential, as required by 26 U.S.C. 6103.

Request for Comments: Comments submitted in response to this notice will be summarized and/or included in the request for OMB approval. All comments will become a matter of public record. Comments are invited on: (a) Whether the collection of information is necessary for the proper performance of the functions of the agency, including whether the information shall have practical utility; (b) the accuracy of the agency's estimate of the burden of the collection of information; (c) ways to enhance the quality, utility, and clarity of the information to be collected; (d) ways to minimize the burden of the collection of information on respondents, including through the use of automated collection techniques or other forms of information technology; and (e) estimates of capital or start-up costs and costs of operation, maintenance, and purchase of services to provide information.

Approved: April 10, 2002.

Glenn P. Kirkland,

IRS Reports Clearance Officer.

[FR Doc. 02–9358 Filed 4–16–02; 8:45 am]

BILLING CODE 4830–01–P

DEPARTMENT OF THE TREASURY

Internal Revenue Service

Proposed Collection; Comment Request for Form 9041

AGENCY: Internal Revenue Service (IRS), Treasury.

ACTION: Notice and request for comments.

SUMMARY: The Department of the Treasury, as part of its continuing effort to reduce paperwork and respondent burden, invites the general public and other Federal agencies to take this opportunity to comment on proposed and/or continuing information collections, as required by the Paperwork Reduction Act of 1995, Public Law 104–13 (44 U.S.C. 3506(c)(2)(A)). Currently, the IRS is soliciting comments concerning Form 9041, Application for Electronic/Magnetic Media Filing of Business and Employee Benefit Plan Returns.

DATES: Written comments should be received on or before June 17, 2002, to be assured of consideration.

ADDRESSES: Direct all written comments to Glenn P. Kirkland, Internal Revenue Service, room 6411, 1111 Constitution Avenue NW., Washington, DC 20224.

FOR FURTHER INFORMATION CONTACT: Requests for additional information or copies of the form and instructions should be directed to Carol Savage, (202) 622–3945, or through the Internet (*CAROL.A.SAVAGE@irs.gov.*), Internal Revenue Service, room 6407, 1111 Constitution Avenue NW., Washington, DC 20224.

SUPPLEMENTARY INFORMATION:

Title: Application for Electronic/Magnetic Media Filing of Business and Employee Benefit Plan Returns.

OMB Number: 1545–1079.

Form Number: Form 9041.

Abstract: Form 9041 is used by fiduciaries of estates and trusts, partnerships, and plan sponsors/administrators as an application to file their returns electronically or on magnetic media; and by software developers, service bureaus, and electronic transmitters to develop auxiliary services.

Current Actions: There are no changes being made to the form at this time.

Type of Review: Extension f a currently approved collection.

Affected Public: Businesses or other for-profit organizations.

Estimated Number of Respondents: 3,000.

Estimated Time Per Respondent: 18 minutes.

Estimated Total Annual Burden Hours: 900.

The following paragraph applies to all of the collections of information covered by this notice:

An agency may not conduct or sponsor, and a person is not required to respond to, a collection of information unless the collection of information displays a valid OMB control number.

Books or records relating to a collection of information must be retained as long as their contents may become material in the administration of any internal revenue law. Generally, tax returns and tax return information are confidential, as required by 26 U.S.C. 6103.

Request for Comments: Comments submitted in response to this notice will be summarized and/or included in the request for OMB approval. All comments will become a matter of public record. Comments are invited on: (a) Whether the collection of information is necessary for the proper performance of the functions of the agency, including whether the information shall have practical utility; (b) the accuracy of the agency's estimate of the burden of the collection of information; (c) ways to enhance the quality, utility, and clarity of the information to be collected; (d) ways to minimize the burden of the collection of information on respondents, including through the use of automated collection techniques or other forms of information technology; and (e) estimates of capital or start-up costs and costs of operation, maintenance, and purchase of services to provide information.

Approved: April 10, 2002.

Glenn P. Kirkland,

IRS Reports Clearance Officer.

[FR Doc. 02–9359 Filed 4–16–02; 8:45 am]

BILLING CODE 4830–01–P

DEPARTMENT OF THE TREASURY

Internal Revenue Service

Proposed Collection; Comment Request for Revenue Procedure 99–21

AGENCY: Internal Revenue Service (IRS), Treasury.

ACTION: Notice and request for comments.

SUMMARY: The Department of the Treasury, as part of its continuing effort to reduce paperwork and respondent burden, invites the general public and other Federal agencies to take this opportunity to comment on proposed and/or continuing information collections, as required by the Paperwork Reduction Act of 1995, Public Law 104–13 (44 U.S.C. 3506(c)(2)(A)). Currently, the IRS is soliciting comments concerning Revenue Procedure 99–21, Disability Suspension.

DATES: Written comments should be received on or before June 17, 2002, to be assured of consideration.

ADDRESSES: Direct all written comments to Glenn P. Kirkland, Internal Revenue Service, room 6411, 1111 Constitution Avenue NW., Washington, DC 20224.

FOR FURTHER INFORMATION CONTACT: Requests for additional information or copies of revenue procedure should be directed to Carol Savage, (202) 622–3945, or through the Internet (*CAROL.A.SAVAGE@irs.gov.*), Internal Revenue Service, room 6407, 1111 Constitution Avenue NW., Washington, DC 20224.

SUPPLEMENTARY INFORMATION:

Title: Disability Suspension.

OMB Number: 1545–1649.

Revenue Procedure Number: Revenue Procedure 99–21.

Abstract: Revenue Procedure 99–21 describes the information that is needed to establish a claim that a taxpayer was financially disabled for purposes of section 6511(h) of the Internal Revenue Code. Under section 6511(h), the statute of limitations on claims for credit or refund is suspended for any period of an individual taxpayer's life during which the taxpayer is unable to manage his or her financial affairs because of a medically determinable mental or physical impairment, if the impairment can be expected to result in death, or has lasted (or can be expected to last) for a continuous period of not less than 12 months. Section 6511(h)(2)(A) requires that proof of the taxpayer's financial disability be furnished to the Internal Revenue Service.

Current Actions: There are no changes being made to the revenue procedure at this time.

Type of Review: Extension of a currently approved collection.

Affected Public: Individuals or households.

Estimated Number of Respondents: 48,200.

Estimated Time Per Respondent: 30 minutes.

Estimated Total Annual Burden Hours: 24,100.

The following paragraph applies to all of the collections of information covered by this notice:

An agency may not conduct or sponsor, and a person is not required to respond to, a collection of information unless the collection of information displays a valid OMB control number. Books or records relating to a collection of information must be retained as long

as their contents may become material in the administration of any internal revenue law. Generally, tax returns and tax return information are confidential, as required by 26 U.S.C. 6103.

Request for Comments: Comments submitted in response to this notice will be summarized and/or included in the request for OMB approval. All comments will become a matter of public record. Comments are invited on: (a) Whether the collection of information is necessary for the proper performance of the functions of the agency, including whether the information shall have practical utility; (b) the accuracy of the agency's estimate of the burden of the collection of information; (c) ways to enhance the quality, utility, and clarity of the information to be collected; (d) ways to minimize the burden of the collection of information on respondents, including through the use of automated collection techniques or other forms of information technology; and (e) estimates of capital or start-up costs and costs of operation, maintenance, and purchase of services to provide information.

Approved: April 10, 2002.

Glenn P. Kirkland,

IRS Reports Clearance Officer.

[FR Doc. 02–9360 Filed 4–16–02; 8:45 am]

BILLING CODE 4830–01–P

Federal Register

Wednesday,
April 17, 2002

Part II

Department of the Treasury

Internal Revenue Service

26 CFR Parts 1, 54, and 602

Required Distributions From Retirement Plans; Final Rule

DEPARTMENT OF THE TREASURY

Internal Revenue Service

26 CFR Parts 1, 54, and 602

[TD 8987]

RIN 1545–AY69, 1545–AY70

Required Distributions From Retirement Plans

AGENCY: Internal Revenue Service (IRS), Treasury.

ACTION: Final and temporary regulations.

SUMMARY: This document contains final and temporary regulations relating to required minimum distributions from qualified plans, individual retirement plans, deferred compensation plans under section 457, and section 403(b) annuity contracts, custodial accounts, and retirement income accounts. These regulations will provide the public with guidance necessary to comply with the law and will affect administrators of, participants in, and beneficiaries of qualified plans; institutions that sponsor and individuals who administer individual retirement plans, individuals who use individual retirement plans for retirement income, and beneficiaries of individual retirement plans; and employees for whom amounts are contributed to section 403(b) annuity contracts, custodial accounts, or retirement income accounts and beneficiaries of such contracts and accounts. The text of the temporary regulations also serves as the text of the proposed regulations set forth in the notice of proposed rulemaking on this subject in the Proposed Rules section of the **Federal Register**.

EFFECTIVE DATE: These regulations are effective January 1, 2003.

FOR FURTHER INFORMATION CONTACT: Cathy A. Vohs, 202–622–6090 (Not a toll free number).

SUPPLEMENTARY INFORMATION:

Paperwork Reduction Act

The collections of information contained in these final regulations have been reviewed and approved by the Office of Management and Budget in accordance with the Paperwork Reduction Act (44 U.S.C. 3507) under control number 1545–0996, in conjunction with the notice of proposed rulemaking published on July 27, 1987, 52 FR 28070, REG-EE–113–82, Required Distributions From Qualified Plans and Individual Retirement Plans, under control number 1545–1466 for Third-Party Disclosure Requirements in IRS Regulations, and control number 1545–1573, in conjunction with the notice of proposed rulemaking published on December 30, 1997, 62 FR 67780, REG–209463–82, Required Distributions from Qualified Plans and Individual Retirement Plans. Responses to the collections of information under control numbers 1545–0996 and 1545–1466 are mandatory. Responses to the collection of information under control number 1545–1573 are required to obtain the benefit of a trust being treated as a designated beneficiary under a retirement plan.

An agency may not conduct or sponsor, and a person is not required to respond to, a collection of information unless the collection of information displays a valid control number assigned by the Office of Management and Budget.

The estimated annual burden per respondent under control number 1545–0996 is 1 hour.

The estimated annual burden per respondent under control number 1545–1466 is 9 minutes.

The estimated annual burden per respondent under control number 1545–1573 is 20 minutes.

Comments concerning the accuracy of this burden estimate and suggestions for reducing this burden should be sent to the Internal Revenue Service, Attn: IRS Reports Clearance Officer, W:CAR:MP:FP:S Washington, DC 20224, and to the Office of Management and Budget, Attn: Desk Officer for the Department of the Treasury, Office of Information and Regulatory Affairs, Washington, DC 20503.

Books or records relating to this collection of information must be retained as long as their contents may become material in the administration of any internal revenue law. Generally, tax returns and tax return information are confidential, as required by 26 U.S.C. 6103.

Background

This document contains amendments to the Income Tax Regulations (26 CFR Part 1) and to the Pension Excise Tax Regulations (26 CFR Part 54) under sections 401, 403, 408, and 4974 of the Internal Revenue Code of 1986 (Code). These amendments conform the regulations to section 634 of the Economic Growth and Tax Relief Reconciliation Act of 2001 (EGTRRA) (115 Stat. 117), section 1404 of the Small Business Job Protection Act of 1996 (SBJPA) (110 Stat. 1791), sections 1121 and 1852 of the Tax Reform Act of 1986 (TRA of 1986) (100 Stat. 2464 and 2864), sections 521 and 713 of the Tax Reform Act of 1984 (TRA of 1984) (98 Stat. 865 and 955), and sections 242 and 243 of the Tax Equity and Fiscal Responsibility Act of 1982 (TEFRA) (96 Stat. 521). The regulations provide guidance on the minimum distribution requirements under section 401(a)(9) for plans qualified under section 401(a) and for other arrangements that incorporate the section 401(a)(9) rules by reference. The section 401(a)(9) rules are incorporated by reference in section 408(a)(6) and (b)(3) for individual retirement accounts and annuities (IRAs) (including Roth IRAs, except as provided in section 408A(c)(5)), section 403(b)(10) for section 403(b) annuity contracts, and section 457(d) for eligible deferred compensation plans.

For purposes of this discussion of the background of the regulations in this preamble, as well as the explanation of provisions below, whenever the term *employee* is used, it is intended to include not only an employee but also an IRA owner.

Section 401(a)(9) provides rules for distributions during the life of the employee in section 401(a)(9)(A) and rules for distributions after the death of the employee in section 401(a)(9)(B). Section 401(a)(9)(A)(ii) provides that the entire interest of an employee in a qualified plan must be distributed, beginning not later than the employee's required beginning date, in accordance with regulations, over the life of the employee or over the lives of the employee and a designated beneficiary (or over a period not extending beyond the life expectancy of the employee and a designated beneficiary).

Section 401(a)(9)(C) defines required beginning date for employees (other than 5-percent owners and IRA owners) as April 1 of the calendar year following the later of the calendar year in which the employee attains age 70½ or the calendar year in which the employee retires. For 5-percent owners and IRA owners, the required beginning date is April 1 of the calendar year following the calendar year in which the employee attains age 70½, even if the employee has not retired.

Section 401(a)(9)(D) provides that (except in the case of a life annuity) the life expectancy of an employee and the employee's spouse that is used to determine the period over which payments must be made may be redetermined, but not more frequently than annually.

Section 401(a)(9)(E) provides that the term *designated beneficiary* means any individual designated as a beneficiary by the employee.

Section 401(a)(9)(G) provides that any distribution required to satisfy the incidental death benefit requirement of

section 401(a) is a required minimum distribution.

Section 401(a)(9)(B)(i) provides that, if the employee dies after distributions have begun, the employee's interest must be distributed at least as rapidly as under the method used by the employee.

Section 401(a)(9)(B)(ii) and (iii) provides that, if the employee dies before required minimum distributions have begun, the employee's interest must be either: distributed (in accordance with regulations) over the life or life expectancy of the designated beneficiary with the distributions beginning no later than 1 year after the date of the employee's death, or distributed within 5 years after the death of the employee. However, under section 401(a)(9)(B)(iv), a surviving spouse may wait until the date the employee would have attained age 70½ to begin taking required minimum distributions.

Comprehensive proposed regulations under section 401(a)(9) were previously published in the **Federal Register** on January 17, 2001 (REG–130477–00/REG–130481–00; 66 FR 3928) and July 27, 1987 (EE–113–82; 52 FR 28070). The proposed regulations published in 2001 substantially simplified the rules for determining required minimum distributions for separate accounts provided in the 1987 proposed regulations. The public reaction to this simplification was very favorable. Consequently, these final regulations adopt the simplified rules in the 2001 proposed regulations for separate accounts, with the modifications described below in the Explanation of Provisions. These regulations continue to incorporate, with some modifications, applicable previously issued guidance (i.e., Notice 83–23 (1983–2 C.B. 418), Notice 88–38 (1988–1 C.B. 524), Notice 96–67 (1996–2 C. B. 235), and Notice 97–75 (1997–2 C.B. 337)). To the extent not modified or superceded by these regulations, the guidance in Notice 83–23 and Notice 97–75 remains in effect. For example, if an employer uses the same required beginning date for all employees regardless of whether the employee has retired by age 70½, during the period before an employee retires, the employee may determine the portion of any distribution that is eligible for rollover using the statutory definition of required beginning date.

With respect to annuity payments, the 2001 proposed regulations retained the basic structure of the 1987 proposed regulation. The preamble to the 2001 proposed regulations indicated that the IRS and Treasury were continuing to study these rules and specifically requested updated comments on current practices and issues relating to required minimum distributions from annuity contracts. Commentators provided information on the variety of annuity contracts being developed and available as insurance company products for purchase with separate accounts. In response to the comments received, temporary regulations under § 1.401(a)(9)–6T significantly expand the situations in which annuity payments under annuity contracts purchased with an employee's benefit may provide for increasing payments. These regulations are being issued in proposed (REG–108697–02) and temporary form rather than final form in order to give taxpayers an opportunity to comment on these changes.

Explanation of Provisions

Uniform Lifetime Table

These final regulations retain the simplifications to the minimum distribution rules for separate accounts provided in the 2001 proposed regulations, including the calculation of the required minimum distribution during the individual's lifetime using a uniform table. The basic calculation for individual accounts provides that the required minimum distribution is determined by dividing the account balance by the distribution period. For lifetime required minimum distributions, there is a uniform distribution period for almost all employees of the same age. The uniform lifetime distribution period table is based on the joint life and last survivor expectancy of an individual and a hypothetical beneficiary 10 years younger. However, if the employee's sole beneficiary is the employee's spouse and the spouse is more than 10 years younger than the employee, a longer distribution period measured by the joint life and last survivor life expectancy of the employee and spouse is permitted to be used.

For years after the year of the employee's death, the distribution period is generally the remaining life expectancy of the designated beneficiary. The beneficiary's remaining life expectancy is calculated using the age of the beneficiary in the year following the year of the employee's death, reduced by one for each subsequent year. If the employee's spouse is the employee's sole beneficiary, the distribution period during the spouse's life is the spouse's single life expectancy. For years after the year of the spouse's death, the distribution period is the spouse's life expectancy calculated in the year of death, reduced by one for each subsequent year. If there is no designated beneficiary, the distribution period is the employee's life expectancy calculated in the year of death, reduced by one for each subsequent year.

New Mortality Tables

The 2001 proposed regulations provided that the life expectancies for purposes of section 401(a)(9) would be determined using the expected return multiples set forth in the regulations under section 72 that are used for other purposes under the Code. These tables, based upon the experience reflected in the 1983 individual annuity mortality table (without load), were adopted for purposes of section 72 in 1986 and had been used in both the 1987 proposed regulations and the 2001 proposed regulations under section 401(a)(9).

Section 634 of EGTRRA instructed the Secretary of Treasury to modify the life expectancy tables used for purposes of the minimum distribution rules to reflect current life expectancy. In accordance with that instruction, the final regulations adopt new tables of life expectancies to be used for determining required minimum distributions.

The new tables were derived by starting with the basic 2000 individual annuity mortality table and projecting mortality improvement for the period 2000 through 2003 using the assumed mortality improvement factors that were adopted in developing the Annuity 2000 mortality table. The resulting mortality rates were blended using a fixed 50% male 50% female blend. The uniform lifetime table provided in these final regulations has also been adjusted to reflect these new mortality tables.

These new tables also may be used to determine an employee's (or IRA owner's) life expectancy, or the joint life and last survivor expectancy of an employee (or IRA owner) and designated beneficiary, for purposes of calculating the amount of substantially equal periodic payments under section 72(t)(2)(A)(iv) when applying a method permitted under A–12 of Notice 89–25 (1989–1 C.B. 662, 666). One of these methods allows use of the methodology underlying the minimum distribution calculations for separate accounts in which the account balance in the prior year is divided by life expectancy or joint life and last survivor expectancy. Under this method, the payments are not equal but are treated as substantially equal if the life expectancy is determined in a consistent manner. A series of substantially equal periodic payments under section 72(t)(2)(A)(iv) determined under this methodology will not be considered to have been modified

merely because the new tables are used in the future to determine the annual periodic payments rather than the tables in the regulations under section 72.

Determination of the Designated Beneficiary

The 2001 proposed regulations provided that, generally, the designated beneficiary is determined as of the end of the year following the year of the employee's death. Thus, any beneficiary eliminated by distribution of the beneficiary's benefit or through disclaimer during the period between the employee's death and the end of the year following the year of death is disregarded in determining the employee's designated beneficiary for purposes of calculating required minimum distributions. If, as of the end of the year following the year of the employee's death, the employee has more than one designated beneficiary and the account or benefit has not been divided into separate accounts or shares for each beneficiary, the beneficiary with the shortest life expectancy is the designated beneficiary. Further, if a person other than an individual is a beneficiary as of that date, the employee is treated as not having a beneficiary (except as provided below with respect to trusts).

Commentators applauded the basic principle of the approach in the 2001 proposed regulations but suggested that the designated beneficiary determination should be made before the end of the year following the year of death so that there will be adequate time to calculate and distribute the required minimum amount between the date the beneficiary determination is finalized and the end of the year following the year of the employee's death (i.e., the date that required minimum distributions to nonspouse designated beneficiaries must commence). In response to these comments, the date for determining the designated beneficiary has been changed to September 30 of the year following the year of the employee's death. In response to comments, these final regulations clarify that in order for a beneficiary to disclaim entitlement to a benefit for purposes of section 401(a)(9), the disclaimer must satisfy section 2518. Finally, the final regulations clarify that if a designated beneficiary dies during the period between the employee's date of death and September 30 of the year following the year of the employee's death, the individual continues to be treated as the designated beneficiary for purposes of determining the distribution period rather than the successor beneficiary.

Some commentators requested that final regulations provide that, if the employee's estate was named as the beneficiary in the beneficiary designation or the employee's estate became beneficiary by operation of law, the beneficiary of the estate or the beneficiary of the IRA named under the employee's will could replace the estate as beneficiary by September 30 of the year following the year of death. This change is not being adopted in these final regulations. The period between death and the beneficiary determination date is a period during which beneficiaries can be eliminated but not replaced with a beneficiary not designated under the plan as of the date of death. In order for an individual to be a designated beneficiary, any beneficiary must be designated under the plan or named by the employee as of the date of death.

These regulations retain the rule in the proposed regulations that, in determining an employee's beneficiaries for purposes of applying the multiple beneficiary rule or determining if the employee's spouse is the employee's sole beneficiary, all beneficiaries of the employee's interest in the plan, including contingent beneficiaries, are taken into account. The regulations also retain the exception to this rule under which, if a beneficiary (subsequent beneficiary) is entitled to any portion of an employee's benefit only if another beneficiary dies before the entire benefit to which that other beneficiary is entitled has been distributed by the plan, the subsequent beneficiary will not be considered a beneficiary. However, these regulations clarify that the exception from the multiple beneficiary rules for death contingencies only applies to a person who could be entitled to a portion of the employee's benefit by becoming the successor to the interest of one of the employee's beneficiaries after that beneficiary's death. The regulations provide that this rule does not apply to a person who has any right (including a contingent right) to an employee's benefit beyond being a mere potential successor to the interest of one of the employee's beneficiaries upon that beneficiary's death. Thus, for example, if one beneficiary has a right to any income on an employee's individual account during that beneficiary's life and another beneficiary has a right to the principal but only after the death of the income beneficiary (with any portion of the principal distributed during the life of the income beneficiary to be held in trust until that beneficiary's death), both beneficiaries must be taken into account in determining the beneficiary with the shortest life expectancy and whether only individuals are beneficiaries.

Default Rule for Post-Death Distributions

These regulations, as did the 2001 proposed regulations, provide that, if an employee dies before the employee's required beginning date and the employee has a designated beneficiary, then the life expectancy rule in section 401(a)(9)(B)(iii) (rather than the 5-year rule in section 401(a)(9)(B)(ii)) is the default distribution rule. Thus, absent a plan provision or election of the 5-year rule, the life expectancy rule applies in all cases in which the employee has a designated beneficiary, and the 5-year rule applies if the employee does not have a designated beneficiary. This is a change from the position in the 1987 proposed regulations that provided the 5-year rule as the default unless the spouse was the sole beneficiary. Commentators pointed out that, as a result of the default rule under the 1987 regulations, some beneficiaries did not commence distributions under the life expectancy rules. In response to those comments, these final regulations provide a transition rule that permits beneficiaries subject to the 5-year rule under the 1987 proposed regulations to switch to the life expectancy rule, provided that all amounts that would have been required to be distributed under an application of the life expectancy rule are distributed by the earlier of December 31, 2003 or the end of the 5-year period following the year of the employee's death.

Temporary Rules for Defined Benefit Plans and Annuity Contracts

These temporary regulations provide a number of changes to the annuity rules provided in the 2001 proposed regulations including changes designed to make the rules more consistent with the rules for individual accounts and reflect new product designs. In order to allow taxpayers to comment on these changes, the section of the regulations governing defined benefit plans and annuities is being issued as temporary and proposed regulations rather than final regulations.

In response to comments, the following changes are being made. First, annuity payments are permitted to be provided for a period certain that is as long as the period under the uniform lifetime table for the employee's age in the year in which the annuity starting date occurs, regardless of who is the employee's designated beneficiary. Further, the period does not change upon the death of the employee even if

the remaining period certain is longer or shorter than the beneficiary's single life expectancy. The same rule applies if the annuity also includes a life annuity or a joint and survivor annuity. If the employee's sole designated beneficiary is the employee's spouse, if the spouse is more than 10 years younger than the employee, and if the annuity is only for a period certain and does not have a life contingent element, the period certain can be as long as the joint life and last survivor expectancy of the employee and the employee's spouse.

These temporary regulations retain the rules in the 2001 proposed regulations interpreting the minimum distribution incidental benefit requirement. Under these rules, if the survivor of a joint and survivor annuity is not the employee's spouse and if the survivor annuitant is more than 10 years younger than the employee, then the survivor portion must be less than 100% of the employee's benefit. In such a case, the survivor annuity must be reduced so that it does not exceed the employee's benefit multiplied by the percentage provided in the table in the regulations. However, the regulations clarify that if the joint and survivor annuity also has a period certain, the reduction in survivor annuity is only required after expiration of the period certain.

Further, in response to comments, the temporary regulations make a number of changes that expand the situations in which increasing annuity payments are permitted. The additional situations are generally only available to annuities purchased from insurance companies.

Under these temporary regulations, an annuity purchased from an insurance company can increase annually by a constant percentage, provided that the initial payment is sufficiently large that the total expected payments, determined without regard to these increases, exceed the account value being annuitized. This minimum payment requirement, together with the adverse economic interests of the insurer and the annuity purchaser, effectively limits the constant percentage increase under an annuity to the assumed interest rate used in pricing the annuity.

These temporary regulations also provide explicit rules relating to the payments of dividends under participating annuity contracts. Under the temporary regulations, a variation in the amount of the annuity payment (referred to as a dividend or other payment resulting from favorable actuarial experience) can be made provided that: (1) The initial payment meets the minimum threshold described above, (2) actuarial experience is measured at least annually, and (3) the resulting dividend payment or other payment is either paid no later than the year following the year for which the actuarial experience is measured or is payable in the same form as the payment of the annuity over the remaining period of the annuity. These requirements are intended to preclude backloading of the distribution stream through the use of conservative pricing assumptions where actuarial gains with respect to those assumptions are deferred and paid at a later date. The definition of dividend or other payment resulting from actuarial gain is broad enough to encompass the contractual adjustment provided for in a variable annuity. Accordingly, the rules that permitted payments that vary with the investment performance of underlying assets has been replaced with this more general construct.

The temporary regulations allow full and partial withdrawals from purchased annuities in certain circumstances. The restrictions on these withdrawals are intended to preclude the use of a withdrawal or cash-out feature as a mechanism to distribute deferred actuarial gains. In the case of a full withdrawal (including a death benefit), the distribution must not exceed the expected future payments under the contract, taking into account the annuitants who are still alive and any remaining period certain, but without regard to any future increases. In the case of a partial withdrawal, the full withdrawal under the terms of the contract must satisfy the preceding sentence and, after the partial withdrawal, all future annuity payments must be reduced proportionately based on the ratio of the partial withdrawal to the maximum withdrawal under the terms of the contract.

As discussed above, these permitted increases are only available for insurance company products and not a distribution stream provided from a section 401(a) defined benefit trust. In addition, these temporary regulations do not permit annuity payments that vary with the value of the underlying assets of the plan to be provided by a defined benefit plan with a section 401(a) qualified trust. Further, these regulations clarify that an annuity under a defined benefit plan with a section 401(a) qualified trust is permitted to provide that annuity payments may increase with an annual percentage increase that does not exceed the percentage increase in a cost-of-living index that is based on prices of all items and issued by the Bureau of Labor Statistics. Finally, the temporary regulations clarify that increases in these annuity payments to reflect benefit increases must be pursuant to a plan amendment increasing benefits.

The preamble to the 2001 proposed regulations indicated that the IRS and Treasury were continuing to consider whether retention of the rule allowing an employee's minimum required distributions under a defined benefit plan to be determined using the rules for individual accounts was appropriate for defined benefit plans. Few comments specifically requested retention of this rule. As a result, the IRS and Treasury have concluded that this rule has little application outside of being used to determine the portion of a lump sum distribution of an employee's vested accrued benefit that is eligible for rollover. Accordingly, this rule has not been retained in these temporary regulations except for use in determining the amount that is eligible for rollover when a defined benefit plan pays an employee's entire vested accrued benefit in a lump sum. However, in response to comments, these temporary regulations permit a plan to treat the amount of a year of annuity payments that would have been payable under the normal form as the minimum required distribution for a year in the case of a lump sum payment.

Finally, in response to a comment, these temporary regulations clarify that actuarial increases to benefits under a defined benefit plan required under section 401(a)(9)(C)(iii), as added by SBJPA, need not be provided for any period before January 1, 1997.

Incidental Benefit Requirement

These final and temporary regulations provide rules relating to the interaction of the section 401(a)(9) requirements and the incidental benefit requirement of § 1.401–1(b)(1)(i). Under these rules, generally if distributions with respect to an employee's benefit satisfy the minimum distribution incidental benefit requirement under these regulations, the distribution will be deemed to satisfy any requirement for distributions under the incidental benefit requirements of § 1.401–1(b)(1)(i). However, if a plan provides for certain post-retirement ancillary death benefits or a section 403(b) contract includes an undistributed pre-1987 account, the employee's benefits must continue to satisfy the distribution requirements of the incidental benefit requirement of § 1.401–1(b)(1)(i), determined without regard to these regulations. Existing revenue rulings continue to provide guidance with respect to the application of the incidental benefit requirements to

permissible nonretirement benefits such as life, accident, or health benefits.

Trust as Beneficiary

The final regulations retain the provision in the proposed regulations allowing an underlying beneficiary of a trust to be an employee's designated beneficiary for purposes of determining required minimum distributions when the trust is named as the beneficiary of a retirement plan or IRA, provided that certain requirements are met. One of these requirements is that documentation of the underlying beneficiaries of the trust be provided to the plan administrator or IRA trustee, custodian, or issuer. In the case of individual accounts, unless the lifetime distribution period for an employee is measured by the joint life expectancy of the employee and the employee's spouse, the deadline under these regulations for providing the beneficiary documentation is October 31 of the year following the year of the employee's death, rather than the end of the year following the year of the employee's death as provided under the 2001 proposed regulations.

This deadline for providing the trust documentation is coordinated with the deadline for determining the employee's designated beneficiary. Amendments to the 1987 proposed regulations published in 1997 eliminated the requirement that the trust be irrevocable before death. Commentators indicated that some beneficiaries would have qualified for a longer distribution period as a result of this change except for the fact that they had not provided the required documentation by the deadline provided in the regulations, which, in some cases, was a date before the regulation was published. Consequently, the commentators requested that final regulations provide a transition period for providing this documentation. In response to these comments, these regulations provide that, if the date for providing this documentation is before October 31, 2003, the documentation is permitted to be provided to the plan administrator (or IRA trustee, custodian, or issuer) until October 31, 2003.

Commentators asked for clarification as to whether an election by a revocable trust to be treated as part of an estate under section 645 causes the trust to be treated as an estate for purposes of section 401(a)(9). On this point, the IRS and Treasury intend that a revocable trust will not fail to be a trust for purposes of section 401(a)(9) merely because the trust elects to be treated as an estate under section 645, as long as the trust continues to be a trust under state law.

Separate Accounts

Several commentators requested clarification concerning when an employee's individual account can be divided into separate accounts that are permitted to satisfy section 401(a)(9) separately and concerning whether separate accounts could also provide for separate investments. In response to these comments, these final regulations provide that separate accounts with different beneficiaries under the plan can be established at any time, either before or after the employee's required beginning date. However, the final regulations provide that the separate accounts are recognized for purposes of determining required minimum distributions only after the later of the year of the employee's death (whether before or after the required beginning date) and the year the separate accounts are established. In addition, the final regulations clarify that, in order to determine the distribution period for the separate account by disregarding the beneficiaries of the other separate account, the separate account must be established no later than the end of the year following the year of the employee's death.

The separate accounting must allocate all post-death investment gains and losses for the period prior to the establishment of the separate accounts on a pro rata basis in a reasonable and consistent basis among the separate accounts for the different beneficiaries. The separate accounting must also allocate any post-death distribution to the separate account of the beneficiary receiving that distribution. Once the separate accounts are established, the final regulations permit the separate accounting to provide for separate investments for each separate account.

Elimination of Optional Forms of Benefit

Some commentators requested relief under section 411(d)(6) for the elimination of optional forms of benefit that were needed to satisfy section 401(a)(9) under the 1987 proposed regulations but that are no longer needed to satisfy these final regulations. For defined contribution plans, this relief generally is not needed because paragraph (e) of A–2 of § 1.411(d)–4 gives broad authority to employers to amend their defined contribution plan to eliminate installment payout options as long as the right to a lump sum option payable at the same time is preserved. These final regulations also provide that, pursuant to section 411(d)(6)(B), a plan will not fail to satisfy section 411(d)(6) merely because the plan is amended to eliminate the availability of an optional form of benefit to the extent that the optional form does not satisfy section 401(a)(9). However, the IRS and Treasury invite public comment if additional relief under section 411(d)(6) is needed in order for defined benefit plans to satisfy section 401(a)(9).

Election of Surviving Spouse To Treat an Inherited IRA as Spouse's Own IRA

These final regulations generally retain the clarifications in the 2001 proposed regulations regarding how and when a surviving spouse of a deceased IRA owner can elect to treat an IRA inherited by the surviving spouse from that owner as the spouse's own IRA. The 1987 proposed regulations provided that this election is deemed to have been made if the surviving spouse contributes to the IRA or does not take the required minimum distribution for a year under section 401(a)(9)(B) as a beneficiary of the IRA. Under the 2001 proposed regulations, this deemed election is permitted to be made only after the distribution of the required minimum amount for the account, if any, for the year of the individual's death. These final regulations provide that the election can be made at any time after the IRA owner's date of death, while clarifying that the minimum required distribution for the calendar year of the IRA's owner's death is determined assuming the IRA owner lived throughout the year. These regulations also clarify that the surviving spouse is required to receive a minimum distribution for the year of the IRA owner's death only to the extent that the amount required was not distributed to the owner before death.

Some commentators raised concerns about the other clarifications in the 2001 proposed regulations. The 2001 proposed regulations clarified that a deemed election is permitted only if the spouse is the sole beneficiary of the account and has an unlimited right to withdraw from the account. This requirement is not satisfied if a trust is named as beneficiary of the IRA, even if the spouse is the sole beneficiary of the trust. As explained in the 2001 preamble, these clarifications make the election consistent with the underlying premise that the surviving spouse could have received a distribution of the entire decedent IRA owner's account and rolled it over to an IRA established in the surviving spouse's own name as IRA owner.

If the spouse actually receives a distribution from the IRA, the spouse is

permitted to roll that distribution over within 60 days into an IRA in the spouse's own name to the extent that the distribution is not a required distribution, regardless of whether or not the spouse is the sole beneficiary of the IRA owner. Further, if the distribution is received by the spouse before the year that the IRA owner would have been 70½, no portion of the distribution is a required minimum distribution for purposes of determining whether it is eligible to be rolled over by the surviving spouse.

IRA Reporting of Required Minimum Distributions

The 2001 proposed regulations required the trustee, custodian, or issuer of an IRA to report the amount of the required minimum distribution from the IRA at the time and in the manner provided under additional guidance issued by the IRS and applicable IRS forms and instructions. A significant number of commentators objected to the requirement that the amount of the required minimum distribution for a year be reported because of concerns that the number may be inaccurate in certain cases. After thorough consideration of these comments and consultation with interested parties, the final regulations continue to provide authority to the Service to determine the extent to which the trustee, custodian, or issuer of an IRA must report information with respect to the required minimum distribution from that IRA through guidance of general applicability as well as forms and publications.

In conjunction with these final regulations a notice is being published that specifies the reporting requirements that apply. Beginning in 2004, trustees, custodians, and issuers must identify to the IRS on Form 5498 each IRA for which a minimum distribution is required to be made to an IRA owner. The trustee, custodian or issuer does not need to report the amount of the required distribution to the IRS. However, the trustee, custodian, or issuer of such an IRA, must provide additional information regarding the IRA to the IRA owner required to receive a minimum required distribution, beginning with the minimum required distribution for 2003. The trustee, custodian or issuer of the IRA either must report the amount of the required minimum distribution for the IRA to the IRA owner, or must advise the IRA owner that a minimum distribution with respect to the IRA is required for the year, offer to calculate the amount of the required minimum distribution for the IRA owner upon request, and then, if requested, calculate the amount and provide it to the IRA owner. Although the delegation of authority in the regulations to require reporting would permit reporting to be required with respect to required minimum distributions to beneficiaries, no reporting is required with respect to beneficiaries at this time.

The reporting provisions in the 2001 proposed regulations, these final regulations, and the notice being published are intended to assist taxpayers in complying with the minimum distribution requirement. However, the Treasury and the IRS continue to have concerns about the overall level of compliance in this area and intend to monitor the effect of the new reporting regime on compliance to determine whether it would be appropriate to modify the regime in the future.

Calculation Simplification

In response to comments that there are too many variables that might change during a distribution calendar year for an accurate calculation of the required minimum distribution for the year by the trustee at the beginning of the year, a number of simplifying changes are included in these final regulations. For lifetime distributions, the marital status of the employee is determined on January 1 each year. Divorce or death after that date is disregarded until the next year. Further, a change in beneficiary due to the spouse's death is not recognized until the following year. Contributions and distributions made after December 31 of a calendar year are disregarded for purposes of determining the minimum distribution for the following year. An employee's account balance for the valuation calendar year that is also the employee's first distribution calendar year is no longer reduced for a distribution on April 1 to satisfy the minimum distribution requirement for the first distribution calendar year. Contributions made after the calendar year that are allocated as of a date in the prior calendar year are no longer required to be added back. The only exceptions are rollover amounts, and recharacterized conversion contributions, that are not in any account on December 31 of a year. These changes are made to the qualified plan rules as well as IRA rules to maintain the parity between the rules.

Other Rules for IRAs

These final regulations retain the general rule that the rules applying section 401(a)(9) to qualified plans apply also to IRAs, unless otherwise provided. In addition to retaining the special rules for IRAs provided in the 2001 proposed regulations, these final regulations provide a special rule for trustee-to-trustee transfers between IRAs to coordinate with the rule that allows aggregation of IRA distributions. Although the IRA to IRA transfer is not treated as a distribution for purposes of section 401(a)(9), in light of the fact that the required minimum distribution with respect to the transferor IRA can be taken from any IRA, the transferor IRA will be able to transfer the entire balance and will not be required to retain the amount of the required minimum distribution for the year.

Section 403(b) Contracts

These regulations retain the basic rule in the 1987 and 2001 proposed regulations that a section 403(b) contract is treated as an individual retirement plan for purposes of satisfying the required minimum distribution rules. Consequently, the delegation of authority to require reporting with respect to IRAs also applies to section 403(b) contracts. However, the notice being issued in conjunction with these regulations provides that no reporting is required at this time with respect to required minimum distributions from section 403(b) contracts.

As requested in comments to the 1987 and the 2001 proposed regulations, these regulations provide that an annuity provided with respect to a section 403(b)(9) retirement income account will not fail to satisfy the requirements for annuity payment under an annuity contract merely because the annuity is not provided under a contract purchased from an insurance company.

Section 1852(a) of TRA '86 applied section 401(a)(9) to section 403(b) contracts effective for benefits accruing after December 31, 1986. The final regulations retain the rule in the proposed regulations interpreting the effective date of section 1852(a) of TRA '86 that does not apply section 401(a)(9) to the undistributed portion of the employee's account balance in a section 403(b) contract as of December 31, 1986 (the pre-'87 account balance). Further, the final regulations clarify that a contract will not lose the grandfather for a pre-'87 account balance merely because the account balance is transferred from one section 403(b) contract to another, provided the issuer of the transferee contract satisfies the recordkeeping requirements for the pre-'87 account balance. However, a distribution and rollover (including a direct rollover) of an amount from the

pre-'87 account will cause that amount to lose the grandfather treatment.

Amendment of Qualified Plans

The IRS intends to publish procedures in the near future that will provide guidance on amending qualified plans to reflect these final regulations under section 401(a)(9).

Amendment of IRAs and Effective Date

Rev. Proc. 2002–10 (2002–4 I.R.B. 401), provides guidance on when IRA documents must be updated for these final regulations and for changes made by EGTRRA.

Effective Date

The regulations apply for determining required minimum distributions for calendar years beginning on or after January 1, 2003. For determining required minimum distributions for calendar year 2002, taxpayers may rely on these final regulations, the 2001 proposed regulations, or the 1987 proposed regulations.

Special Analyses

It has been determined that these regulations are not a significant regulatory action as defined in Executive Order 12866. Therefore, a regulatory assessment is not required. It is hereby certified that the collection of information in these regulations does not have a significant economic impact on a substantial number of small entities. This certification is based on the following. The only provisions requiring collection of information are in A–2 of § 1.401(a)(9)–1, A–4 of § 1.401(a)(9)–3, A–5 and A–6 of § 1.401(a)(9)–4, and A–2 of § 1.403(b)–3. The election described in A–4 of § 1.401(a)(9)–3 is expected to be an unusual occurrence for small entities because few individuals with benefits in retirement plans maintained by small entities are likely to make these elections. In the case of A–2 of § 1.401(a)(9)–1 and A–5 and A–6 of § 1.401(a)(9)–4, when determining required minimum distributions in cases where a plan participant wishes to designate a trust as beneficiary of the participant's benefit, the reporting burden is primarily on the plan participant, or trustee of the trust named as beneficiary, to supply information rather than on the entity maintaining the retirement plan and the fact that the number of participants per plan to whom the burden applies is insignificant. In A–2 of 1.403(b)–3, the recordkeeping burden with respect to section 403(b) contracts under which the pre-1987 account balance must be maintained only applies to issuers and custodians of those contracts, which generally are not small entities. Therefore, a Regulatory Flexibility Analysis (5 U.S.C. chapter 6) is not required for this regulation. Pursuant to section 7805(f) of the Internal Revenue Code, the notices of proposed rulemaking preceding the final rule were submitted to the Chief Counsel for Advocacy of the Small Business Administration for comment on their impact on small business and temporary § 1.401(a)(9)–6T will be submitted to the Chief Counsel for such comments.

Drafting Information

The principal authors of these regulations are Marjorie Hoffman and Cathy A. Vohs of the Office of the Division Counsel/Associate Chief Counsel (Tax Exempt and Government Entities). However, other personnel from the IRS and Treasury participated in their development.

List of Subjects

26 CFR Part 1

Income taxes, Reporting and recordkeeping requirements.

26 CFR Part 54

Excise taxes, Pensions, Reporting and recordkeeping requirements.

26 CFR Part 602

Reporting and recordkeeping requirements.

Adoption of Amendments to the Regulations

Accordingly, 26 CFR part 1 is amended as follows:

PART 1—INCOME TAXES

Paragraph 1. The authority citation for part 1 is amended by adding entries in numerical order to read in part as follows:

Authority: 26 U.S.C. 7805 * * *

§ 1.401(a)(9)–1 is also issued under 26 U.S.C. 401(a)(9).

§ 1.401(a)(9)–2 is also issued under 26 U.S.C. 401(a)(9).

§ 1.401(a)(9)–3 is also issued under 26 U.S.C. 401(a)(9).

§ 1.401(a)(9)–4 is also issued under 26 U.S.C. 401(a)(9).

§ 1.401(a)(9)–5 is also issued under 26 U.S.C. 401(a)(9).

§ 1.401(a)(9)–6T is also issued under 26 U.S.C. 401(a)(9).

§ 1.401(a)(9)–7 is also issued under 26 U.S.C. 401(a)(9).

§ 1.401(a)(9)–8 is also issued under 26 U.S.C. 401(a)(9).

§ 1.401(a)(9)–9 is also issued under 26 U.S.C. 401(a)(9). * * *

§ 1.403(b)–3 is also issued under 26 U.S.C. 403(b)(10). * * *

§ 1.408–8 is also issued under 26 U.S.C. 408(a)(6) and (b)(3). * * *

Par. 2. Sections 1.401(a)(9)–0 through 1.401(a)(9)–9 are added to read as follows:

§ 1.401(a)(9)–0 Required minimum distributions; table of contents.

This table of contents lists the regulations relating to required minimum distributions under section 401(a)(9) of the Internal Revenue Code as follows:

§ 1.401(a)(9)–0 Required minimum distributions; table of contents.
§ 1.401(a)(9)–1 Minimum distribution requirement in general.
§ 1.401(a)(9)–2 Distributions commencing during an employee's lifetime.
§ 1.401(a)(9)–3 Death before required beginning date.
§ 1.401(a)(9)–4 Determination of the designated beneficiary.
§ 1.401(a)(9)–5 Required minimum distributions from defined contribution plans.
§ 1.401(a)(9)–6T Required minimum distributions for defined benefit plans and annuity contracts (temporary).
§ 1.401(a)(9)–7 Rollovers and transfers.
§ 1.401(a)(9)–8 Special rules.
§ 1.401(a)(9)–9 Life expectancy and distribution period tables.

§ 1.401(a)(9)–1 Minimum distribution requirement in general.

Q–1. What plans are subject to the minimum distribution requirement under section 401(a)(9), this section, and §§ 1.401(a)(9)–2 through 1.401(a)(9)–9?

A–1. Under section 401(a)(9), all stock bonus, pension, and profit-sharing plans qualified under section 401(a) and annuity contracts described in section 403(a) are subject to required minimum distribution rules. See this section and §§ 1.401(a)(9)–2 through 1.401(a)(9)–9 for the distribution rules applicable to these plans. Under section 403(b)(10), annuity contracts or custodial accounts described in section 403(b) are subject to required minimum distribution rules. See § 1.403(b)–3 for the distribution rules applicable to these annuity contracts or custodial accounts. Under section 408(a)(6) and 408(b)(3), individual retirement plans (including, for some purposes, Roth IRAs under section 408A) are subject to required minimum distribution rules. See § 1.408–8 for the distribution rules applicable to individual retirement plans and see § 1.408A–6 for the distribution rules applicable to Roth IRAs under section 408A. Under section 457(d)(2), certain deferred compensation plans for employees of tax exempt organizations or state and

local government employees are subject to required minimum distribution rules.

Q–2. Which employee account balances and benefits held under qualified trusts and plans are subject to the distribution rules of section 401(a)(9), this section, and §§ 1.401(a)(9)–2 through 1.401(a)(9)–9?

A–2. (a) *In general.* The distribution rules of section 401(a)(9) apply to all account balances and benefits in existence on or after January 1, 1985. This section and §§ 1.401(a)(9)–2 through 1.401(a)(9)–9 apply for purposes of determining required minimum distributions for calendar years beginning on or after January 1, 2003.

(b) *Beneficiaries.* (1) The distribution rules of this section and §§ 1.401(a)(9)–2 through 1.401(a)(9)–9 apply to account balances and benefits held for the benefit of a beneficiary for calendar years beginning on or after January 1, 2003, even if the employee died prior to January 1, 2003. Thus, in the case of an employee who died prior to January 1, 2003, the designated beneficiary must be redetermined in accordance with the provisions of § 1.401(a)(9)–4 and the applicable distribution period (determined under § 1.401(a)(9)–5 or 1.401(a)(9)–6T, whichever is applicable) must be reconstructed for purposes of determining the amount required to be distributed for calendar years beginning on or after January 1, 2003.

(2) A designated beneficiary that is receiving payments under the 5-year rule of section 401(a)(9)(B)(ii), either by affirmative election or default provisions, may, if the plan so provides, switch to using the life expectancy rule of section 401(a)(9)(B)(iii) provided any amounts that would have been required to be distributed under the life expectancy rule of section 401(a)(9)(B)(iii) for all distribution calendar years before 2004 are distributed by the earlier of December 31, 2003 or the end of the 5-year period determined under A–2 of § 1.401(a)(9)–3.

(c) *Trust documentation.* If a trust fails to meet the rule of A–5 of § 1.401(a)(9)–4 (permitting the beneficiaries of the trust, and not the trust itself, to be treated as the employee's designated beneficiaries) solely because the trust documentation was not provided to the plan administrator by October 31 of the calendar year following the calendar year in which the employee died, and such documentation is provided to the plan administrator by October 31, 2003, the beneficiaries of the trust will be treated as designated beneficiaries of the employee under the plan for purposes of determining the distribution period under section 401(a)(9).

Q–3. What specific provisions must a plan contain in order to satisfy section 401(a)(9)?

A–3. (a) *Required provisions.* In order to satisfy section 401(a)(9), the plan must include the provisions described in this paragraph reflecting section 401(a)(9). First, the plan must generally set forth the statutory rules of section 401(a)(9), including the incidental death benefit requirement in section 401(a)(9)(G). Second, the plan must provide that distributions will be made in accordance with this section and §§ 1.401(a)(9)–2 through 1.401(a)(9)–9. The plan document must also provide that the provisions reflecting section 401(a)(9) override any distribution options in the plan inconsistent with section 401(a)(9). The plan also must include any other provisions reflecting section 401(a)(9) that are prescribed by the Commissioner in revenue rulings, notices, and other guidance published in the Internal Revenue Bulletin. See § 601.601(d)(2)(ii)(b) of this chapter.

(b) *Optional provisions.* The plan may also include written provisions regarding any optional provisions governing plan distributions that do not conflict with section 401(a)(9) and the regulations thereunder.

(c) *Absence of optional provisions.* Plan distributions commencing after an employee's death will be required to be made under the default provision set forth in § 1.401(a)(9)–3 for distributions unless the plan document contains optional provisions that override such default provisions. Thus, if distributions have not commenced to the employee at the time of the employee's death, distributions after the death of an employee are to be made automatically in accordance with the default provisions in A–4(a) of § 1.401(a)(9)–3 unless the plan either specifies in accordance with A–4(b) of § 1.401(a)(9)–3 the method under which distributions will be made or provides for elections by the employee (or beneficiary) in accordance with A–4(c) of § 1.401(a)(9)–3 and such elections are made by the employee or beneficiary.

§ 1.401(a)(9)–2 Distributions commencing during an employee's lifetime.

Q–1. In the case of distributions commencing during an employee's lifetime, how must the employee's entire interest be distributed in order to satisfy section 401(a)(9)(A)?

A–1. (a) In order to satisfy section 401(a)(9)(A), the entire interest of each employee must be distributed to such employee not later than the required beginning date, or must be distributed, beginning not later than the required beginning date, over the life of the employee or joint lives of the employee and a designated beneficiary or over a period not extending beyond the life expectancy of the employee or the joint life and last survivor expectancy of the employee and the designated beneficiary.

(b) Section 401(a)(9)(G) provides that lifetime distributions must satisfy the incidental death benefit requirements.

(c) The amount required to be distributed for each calendar year in order to satisfy section 401(a)(9)(A) and (G) generally depends on whether a distribution is in the form of distributions under a defined contribution plan or annuity payments under a defined benefit plan or under an annuity contract. For the method of determining the required minimum distribution in accordance with section 401(a)(9)(A) and (G) from an individual account under a defined contribution plan, see § 1.401(a)(9)–5. For the method of determining the required minimum distribution in accordance with section 401(a)(9)(A) and (G) in the case of annuity payments from a defined benefit plan or an annuity contract, see § 1.401(a)(9)–6T.

Q–2. For purposes of section 401(a)(9)(C), what does the term *required beginning date* mean?

A–2. (a) Except as provided in paragraph (b) of this A–2 with respect to a 5-percent owner, as defined in paragraph (c) of this A–2, the term *required beginning date* means April 1 of the calendar year following the later of the calendar year in which the employee attains age 70½ or the calendar year in which the employee retires from employment with the employer maintaining the plan.

(b) In the case of an employee who is a 5-percent owner, the term *required beginning date* means April 1 of the calendar year following the calendar year in which the employee attains age 70½ .

(c) For purposes of section 401(a)(9), a 5-percent owner is an employee who is a 5-percent owner (as defined in section 416) with respect to the plan year ending in the calendar year in which the employee attains age 70½.

(d) Paragraph (b) of this A–2 does not apply in the case of a governmental plan (within the meaning of section 414(d)) or a church plan. For purposes of this paragraph, the term *church plan* means a plan maintained by a church for church employees, and the term *church* means any church (as defined in section 3121(w)(3)(A)) or qualified church-controlled organization (as defined in section 3121(w)(3)(B)).

(e) A plan is permitted to provide that the required beginning date for purposes of section 401(a)(9) for all employees is April 1 of the calendar year following the calendar year in which an employee attains age 70½ regardless of whether the employee is a 5-percent owner.

Q–3. When does an employee attain age 70½?

A–3. An employee attains age 70½ as of the date six calendar months after the 70th anniversary of the employee's birth. For example, if an employee's date of birth was June 30, 1933, the 70th anniversary of such employee's birth is June 30, 2003. Such employee attains age 70½ on December 30, 2003. Consequently, if the employee is a 5-percent owner or retired, such employee's required beginning date is April 1, 2004. However, if the employee's date of birth was July 1, 1933, the 70th anniversary of such employee's birth would be July 1, 2003. Such employee would then attain age 70½ on January 1, 2004 and such employee's required beginning date would be April 1, 2005.

Q–4. Must distributions made before the employee's required beginning date satisfy section 401(a)(9)?

A–4. Lifetime distributions made before the employee's required beginning date for calendar years before the employee's first distribution calendar year, as defined in A–1(b) of § 1.401(a)(9)–5, need not be made in accordance with section 401(a)(9). However, if distributions commence before the employee's required beginning date under a particular distribution option, such as in the form of an annuity, the distribution option fails to satisfy section 401(a)(9) at the time distributions commence if, under terms of the particular distribution option, distributions to be made for the employee's first distribution calendar year or any subsequent distribution calendar year will fail to satisfy section 401(a)(9).

Q–5. If distributions have begun to an employee during the employee's lifetime (in accordance with section 401(a)(9)(A)(ii)), how must distributions be made after an employee's death?

A–5. Section 401(a)(9)(B)(i) provides that if the distribution of the employee's interest has begun in accordance with section 401(a)(9)(A)(ii) and the employee dies before his entire interest has been distributed to him, the remaining portion of such interest must be distributed at least as rapidly as under the distribution method being used under section 401(a)(9)(A)(ii) as of the date of his death. The amount required to be distributed for each distribution calendar year following the calendar year of death generally depends on whether a distribution is in the form of distributions from an individual account under a defined contribution plan or annuity payments under a defined benefit plan. For the method of determining the required minimum distribution in accordance with section 401(a)(9)(B)(i) from an individual account, see § 1.401(a)(9)–5. In the case of annuity payments from a defined benefit plan or an annuity contract, see § 1.401(a)(9)–6T.

Q–6. For purposes of section 401(a)(9)(B), when are distributions considered to have begun to the employee in accordance with section 401(a)(9)(A)(ii)?

A–6. (a) *General rule.* Except as otherwise provided in A–10 of § 1.401(a)(9)–6T, distributions are not treated as having begun to the employee in accordance with section 401(a)(9)(A)(ii) until the employee's required beginning date, without regard to whether payments have been made before that date. Thus, section 401(a)(9)(B)(i) only applies if an employee dies on or after the employee's required beginning date. For example, if employee A retires in 2003, the calendar year A attains age 65½, and begins receiving installment distributions from a profit-sharing plan over a period not exceeding the joint life and last survivor expectancy of A and A's spouse, benefits are not treated as having begun in accordance with section 401(a)(9)(A)(ii) until April 1, 2009 (the April 1 following the calendar year in which A attains age 70½). Consequently, if A dies before April 1, 2009 (A's required beginning date), distributions after A's death must be made in accordance with section 401(a)(9)(B)(ii) or (iii) and (iv) and § 1.401(a)(9)–3, and not section 401(a)(9)(B)(i). This is the case without regard to whether the plan has distributed the minimum distribution for the first distribution calendar year (as defined in A–1(b) of § 1.401(a)(9)–5) before A's death.

(b) If a plan provides, in accordance with A–2(e) of this section, that the required beginning date for purposes of section 401(a)(9) for all employees is April 1 of the calendar year following the calendar year in which an employee attains age 70½, an employee who dies on or after the required beginning date determined under the plan terms is treated as dying after the employee's distributions have begun for purposes of this A–6 even though the employee dies before the April 1 following the calendar year in which the employee retires.

§ 1.401(a)(9)–3 Death before required beginning date.

Q–1. If an employee dies before the employee's required beginning date, how must the employee's entire interest be distributed in order to satisfy section 401(a)(9)?

A–1. (a) Except as otherwise provided in A–10 of § 1.401(a)(9)–6T, if an employee dies before the employee's required beginning date (and, thus, before distributions are treated as having begun in accordance with section 401(a)(9)(A)(ii)), distribution of the employee's entire interest must be made in accordance with one of the methods described in section 401(a)(9)(B)(ii) or (iii) and (iv). One method (the 5-year rule in section 401(a)(9)(B)(ii)) requires that the entire interest of the employee be distributed within 5 years of the employee's death regardless of who or what entity receives the distribution. Another method (the life expectancy rule in section 401(a)(9)(B)(iii) and (iv)) requires that any portion of an employee's interest payable to (or for the benefit of) a designated beneficiary be distributed, commencing within one year of the employee's death, over the life of such beneficiary (or over a period not extending beyond the life expectancy of such beneficiary). Section 401(a)(9)(B)(iv) provides special rules where the designated beneficiary is the surviving spouse of the employee, including a special commencement date for distributions under section 401(a)(9)(B)(iii) to the surviving spouse.

(b) See A–4 of this section for the rules for determining which of the methods described in paragraph (a) of this A–1 applies. See A–3 of this section to determine when distributions under the exception to the 5-year rule in section 401(a)(9)(B)(iii) and (iv) must commence. See A–2 of this section to determine when the 5-year period in section 401(a)(9)(B)(ii) ends. For distributions using the life expectancy rule in section 401(a)(9)(B)(iii) and (iv), see § 1.401(a)(9)–4 in order to determine the designated beneficiary under section 401(a)(9)(B)(iii) and (iv), see § 1.401(a)(9)–5 for the rules for determining the required minimum distribution under a defined contribution plan, and see § 1.401(a)(9)–6T for required minimum distributions under defined benefit plans.

Q–2. By when must the employee's entire interest be distributed in order to satisfy the 5-year rule in section 401(a)(9)(B)(ii)?

A–2. In order to satisfy the 5-year rule in section 401(a)(9)(B)(ii), the employee's entire interest must be distributed by the end of the calendar

year which contains the fifth anniversary of the date of the employee's death. For example, if an employee dies on January 1, 2003, the entire interest must be distributed by the end of 2008, in order to satisfy the 5-year rule in section 401(a)(9)(B)(ii).

Q–3. When are distributions required to commence in order to satisfy the life expectancy rule in section 401(a)(9)(B)(iii) and (iv)?

A–3. (a) *Nonspouse beneficiary.* In order to satisfy the life expectancy rule in section 401(a)(9)(B)(iii), if the designated beneficiary is not the employee's surviving spouse, distributions must commence on or before the end of the calendar year immediately following the calendar year in which the employee died. This rule also applies to the distribution of the entire remaining benefit if another individual is a designated beneficiary in addition to the employee's surviving spouse. See A–2 and A–3 of § 1.401(a)(9)–8, however, if the employee's benefit is divided into separate accounts.

(b) *Spousal beneficiary.* In order to satisfy the rule in section 401(a)(9)(B)(iii) and (iv), if the sole designated beneficiary is the employee's surviving spouse, distributions must commence on or before the later of—

(1) The end of the calendar year immediately following the calendar year in which the employee died; and

(2) The end of the calendar year in which the employee would have attained age 70½.

Q–4. How is it determined whether the 5-year rule in section 401(a)(9)(B)(ii) or the life expectancy rule in section 401(a)(9)(B)(iii) and (iv) applies to a distribution?

A–4. (a) *No plan provision.* If a plan does not adopt an optional provision described in paragraph (b) or (c) of this A–4 specifying the method of distribution after the death of an employee, distribution must be made as follows:

(1) If the employee has a designated beneficiary, as determined under § 1.401(a)(9)–4, distributions are to be made in accordance with the life expectancy rule in section 401(a)(9)(B)(iii) and (iv).

(2) If the employee has no designated beneficiary, distributions are to be made in accordance with the 5-year rule in section 401(a)(9)(B)(ii).

(b) *Optional plan provisions.* A plan may adopt a provision specifying either that the 5-year rule in section 401(a)(9)(B)(ii) will apply to certain distributions after the death of an employee even if the employee has a designated beneficiary or that distribution in every case will be made in accordance with the 5-year rule in section 401(a)(9)(B)(ii). Further, a plan need not have the same method of distribution for the benefits of all employees in order to satisfy section 401(a)(9).

(c) *Elections.* A plan may adopt a provision that permits employees (or beneficiaries) to elect on an individual basis whether the 5-year rule in section 401(a)(9)(B)(ii) or the life expectancy rule in section 401(a)(9)(B)(iii) and (iv) applies to distributions after the death of an employee who has a designated beneficiary. Such an election must be made no later than the earlier of the end of the calendar year in which distribution would be required to commence in order to satisfy the requirements for the life expectancy rule in section 401(a)(9)(B)(iii) and (iv) (see A–3 of this section for the determination of such calendar year) or the end of the calendar year which contains the fifth anniversary of the date of death of the employee. As of the last date the election may be made, the election must be irrevocable with respect to the beneficiary (and all subsequent beneficiaries) and must apply to all subsequent calendar years. If a plan provides for the election, the plan may also specify the method of distribution that applies if neither the employee nor the beneficiary makes the election. If neither the employee nor the beneficiary elects a method and the plan does not specify which method applies, distribution must be made in accordance with paragraph (a) of this A–4.

Q–5. If the employee's surviving spouse is the employee's sole designated beneficiary and such spouse dies after the employee, but before distributions have begun to the surviving spouse under section 401(a)(9)(B)(iii) and (iv), how is the employee's interest to be distributed?

A–5. Pursuant to section 401(a)(9)(B)(iv)(II), if the surviving spouse is the employee's sole designated beneficiary and dies after the employee, but before distributions to such spouse have begun under section 401(a)(9)(B)(iii) and (iv), the 5-year rule in section 401(a)(9)(B)(ii) and the life expectancy rule in section 401(a)(9)(B)(iii) are to be applied as if the surviving spouse were the employee. In applying this rule, the date of death of the surviving spouse shall be substituted for the date of death of the employee. However, in such case, the rules in section 401(a)(9)(B)(iv) are not available to the surviving spouse of the deceased employee's surviving spouse.

Q–6. For purposes of section 401(a)(9)(B)(iv)(II), when are distributions considered to have begun to the surviving spouse?

A–6. Distributions are considered to have begun to the surviving spouse of an employee, for purposes of section 401(a)(9)(B)(iv)(II), on the date, determined in accordance with A–3 of this section, on which distributions are required to commence to the surviving spouse, even though payments have actually been made before that date. See A–11 of § 1.401(a)(9)–6T for a special rule for annuities.

§ 1.401(a)(9)–4 Determination of the designated beneficiary.

Q–1. Who is a designated beneficiary under section 401(a)(9)(E)?

A–1. A designated beneficiary is an individual who is designated as a beneficiary under the plan. An individual may be designated as a beneficiary under the plan either by the terms of the plan or, if the plan so provides, by an affirmative election by the employee (or the employee's surviving spouse) specifying the beneficiary. A beneficiary designated as such under the plan is an individual who is entitled to a portion of an employee's benefit, contingent on the employee's death or another specified event. For example, if a distribution is in the form of a joint and survivor annuity over the life of the employee and another individual, the plan does not satisfy section 401(a)(9) unless such other individual is a designated beneficiary under the plan. A designated beneficiary need not be specified by name in the plan or by the employee to the plan in order to be a designated beneficiary so long as the individual who is to be the beneficiary is identifiable under the plan. The members of a class of beneficiaries capable of expansion or contraction will be treated as being identifiable if it is possible, to identify the class member with the shortest life expectancy. The fact that an employee's interest under the plan passes to a certain individual under a will or otherwise under applicable state law does not make that individual a designated beneficiary unless the individual is designated as a beneficiary under the plan. See A–6 of § 1.401(a)(9)–8 for rules which apply to qualified domestic relation orders.

Q–2. Must an employee (or the employee's spouse) make an affirmative election specifying a beneficiary for a person to be a designated beneficiary under section 40l(a)(9)(E)?

A–2. No, a designated beneficiary is an individual who is designated as a beneficiary under the plan whether or

not the designation under the plan was made by the employee. The choice of beneficiary is subject to the requirements of sections 401(a)(11), 414(p), and 417.

Q–3. May a person other than an individual be considered to be a designated beneficiary for purposes of section 401(a)(9)?

A–3. No, only individuals may be designated beneficiaries for purposes of section 401(a)(9). A person that is not an individual, such as the employee's estate, may not be a designated beneficiary. If a person other than an individual is designated as a beneficiary of an employee's benefit, the employee will be treated as having no designated beneficiary for purposes of section 401(a)(9), even if there are also individuals designated as beneficiaries. However, see A–5 of this section for special rules that apply to trusts and A–2 and A–3 of § 1.401(a)(9)–8 for rules that apply to separate accounts.

Q–4. When is the designated beneficiary determined?

A–4. (a) *General rule.* In order to be a designated beneficiary, an individual must be a beneficiary as of the date of death. Except as provided in paragraph (b) and § 1.401(a)(9)–6T, the employee's designated beneficiary will be determined based on the beneficiaries designated as of the date of death who remain beneficiaries as of September 30 of the calendar year following the calendar year of the employee's death. Consequently, except as provided in § 1.401(a)(9)–6T, any person who was a beneficiary as of the date of the employee's death, but is not a beneficiary as of that September 30 (e.g., because the person receives the entire benefit to which the person is entitled before that September 30), is not taken into account in determining the employee's designated beneficiary for purposes of determining the distribution period for required minimum distributions after the employee's death. Accordingly, if a person disclaims entitlement to the employee's benefit, pursuant to a disclaimer that satisfies section 2518 by that September 30 thereby allowing other beneficiaries to receive the benefit in lieu of that person, the disclaiming person is not taken into account in determining the employee's designated beneficiary.

(b) *Surviving spouse.* As provided in A–5 of § 1.401(a)(9)–3, if the employee's spouse is the sole designated beneficiary as of September 30 of the calendar year following the calendar year of the employee's death, and the surviving spouse dies after the employee and before the date on which distributions have begun to the surviving spouse under section 401(a)(9)(B)(iii) and (iv), the rule in section 40l(a)(9)(B)(iv)(II) will apply. Thus, for example, the relevant designated beneficiary for determining the distribution period after the death of the surviving spouse is the designated beneficiary of the surviving spouse. Similarly, such designated beneficiary will be determined based on the beneficiaries designated as of the date of the surviving spouse's death and who remain beneficiaries as of September 30 of the calendar year following the calendar year of the surviving spouse's death. Further, if, as of that September 30, there is no designated beneficiary under the plan with respect to that surviving spouse, distribution must be made in accordance with the 5-year rule in section 401(a)(9)(B)(ii) and A–2 of § 1.401(a)(9)–3.

(c) *Deceased beneficiary.* For purposes of this A–4, an individual who is a beneficiary as of the date of the employee's death and dies prior to September 30 of the calendar year following the calendar year of the employee's death without disclaiming continues to be treated as a beneficiary as of the September 30 of the calendar year following the calendar year of the employee's death in determining the employee's designated beneficiary for purposes of determining the distribution period for required minimum distributions after the employee's death, without regard to the identity of the successor beneficiary who is entitled to distributions as the beneficiary of the deceased beneficiary. The same rule applies in the case of distributions to which A–5 of § 1.401(a)(9)–3 applies so that, if an individual is designated as a beneficiary of an employee's surviving spouse as of the spouse's date of death and dies prior to September 30 of the year following the year of the surviving spouse's death, that individual will continue to be treated as a designated beneficiary.

Q–5. If a trust is named as a beneficiary of an employee, will the beneficiaries of the trust with respect to the trust's interest in the employee's benefit be treated as having been designated as beneficiaries of the employee under the plan for purposes of determining the distribution period under section 401(a)(9)?

A–5. (a) If the requirements of paragraph (b) of this A–5 are met with respect to a trust that is named as the beneficiary of an employee under the plan, the beneficiaries of the trust (and not the trust itself) will be treated as having been designated as beneficiaries of the employee under the plan for purposes of determining the distribution period under section 401(a)(9).

(b) The requirements of this paragraph (b) are met if, during any period during which required minimum distributions are being determined by treating the beneficiaries of the trust as designated beneficiaries of the employee, the following requirements are met—

(1) The trust is a valid trust under state law, or would be but for the fact that there is no corpus.

(2) The trust is irrevocable or will, by its terms, become irrevocable upon the death of the employee.

(3) The beneficiaries of the trust who are beneficiaries with respect to the trust's interest in the employee's benefit are identifiable within the meaning of A–1 of this section from the trust instrument.

(4) The documentation described in A–6 of this section has been provided to the plan administrator.

(c) In the case of payments to a trust having more than one beneficiary, see A–7 of § 1.401(a)(9)–5 for the rules for determining the designated beneficiary whose life expectancy will be used to determine the distribution period and A–3 of this section for the rules that apply if a person other than an individual is designated as a beneficiary of an employee's benefit. However, the separate account rules under A–2 of § 1.401(a)(9)–8 are not available to beneficiaries of a trust with respect to the trust's interest in the employee's benefit.

(d) If the beneficiary of the trust named as beneficiary of the employee's interest is another trust, the beneficiaries of the other trust will be treated as being designated as beneficiaries of the first trust, and thus, having been designated by the employee under the plan for purposes of determining the distribution period under section 401(a)(9)(A)(ii), provided that the requirements of paragraph (b) of this A–5 are satisfied with respect to such other trust in addition to the trust named as beneficiary.

Q–6. If a trust is named as a beneficiary of an employee, what documentation must be provided to the plan administrator?

A–6. (a) *Required minimum distributions before death.* If an employee designates a trust as the beneficiary of his or her entire benefit and the employee's spouse is the sole beneficiary of the trust, in order to satisfy the documentation requirements of this A–6 so that the spouse can be treated as the sole designated beneficiary of the employee's benefits (if the other requirements of paragraph (b)

of A–5 of this section are satisfied), the employee must either—

(1) Provide to the plan administrator a copy of the trust instrument and agree that if the trust instrument is amended at any time in the future, the employee will, within a reasonable time, provide to the plan administrator a copy of each such amendment; or

(2) Provide to the plan administrator a list of all of the beneficiaries of the trust (including contingent and remaindermen beneficiaries with a description of the conditions on their entitlement sufficient to establish that the spouse is the sole beneficiary) for purposes of section 401(a)(9); certify that, to the best of the employee's knowledge, this list is correct and complete and that the requirements of paragraph (b)(1), (2), and (3) of A–5 of this section are satisfied; agree that, if the trust instrument is amended at any time in the future, the employee will, within a reasonable time, provide to the plan administrator corrected certifications to the extent that the amendment changes any information previously certified; and agree to provide a copy of the trust instrument to the plan administrator upon demand.

(b) *Required minimum distributions after death.* In order to satisfy the documentation requirement of this A–6 for required minimum distributions after the death of the employee (or spouse in a case to which A–5 of § 1.401(a)(9)–3 applies), by October 31 of the calendar year immediately following the calendar year in which the employee died, the trustee of the trust must either—

(1) Provide the plan administrator with a final list of all beneficiaries of the trust (including contingent and remaindermen beneficiaries with a description of the conditions on their entitlement) as of September 30 of the calendar year following the calendar year of the employee's death; certify that, to the best of the trustee's knowledge, this list is correct and complete and that the requirements of paragraph (b)(1), (2), and (3) of A–5 of this section are satisfied; and agree to provide a copy of the trust instrument to the plan administrator upon demand; or

(2) Provide the plan administrator with a copy of the actual trust document for the trust that is named as a beneficiary of the employee under the plan as of the employee's date of death.

(c) *Relief for discrepancy between trust instrument and employee certifications or earlier trust instruments.* (1) If required minimum distributions are determined based on the information provided to the plan administrator in certifications or trust instruments described in paragraph (a) or (b) of this A–6, a plan will not fail to satisfy section 401(a)(9) merely because the actual terms of the trust instrument are inconsistent with the information in those certifications or trust instruments previously provided to the plan administrator, but only if the plan administrator reasonably relied on the information provided and the required minimum distributions for calendar years after the calendar year in which the discrepancy is discovered are determined based on the actual terms of the trust instrument.

(2) For purposes of determining the amount of the excise tax under section 4974, the required minimum distribution is determined for any year based on the actual terms of the trust in effect during the year.

§ 1.401(a)(9)–5 Required minimum distributions from defined contribution plans.

Q–1. If an employee's benefit is in the form of an individual account under a defined contribution plan, what is the amount required to be distributed for each calendar year?

A–1. (a) *General rule.* If an employee's accrued benefit is in the form of an individual account under a defined contribution plan, the minimum amount required to be distributed for each distribution calendar year, as defined in paragraph (b) of this A–1, is equal to the quotient obtained by dividing the account (determined under A–3 of this section) by the applicable distribution period (determined under A–4 or A–5 of this section, whichever is applicable). However, the required minimum distribution amount will never exceed the entire account balance on the date of the distribution. See A–8 of this section for rules that apply if a portion of the employee's account is not vested. Further, the minimum distribution required to be distributed on or before an employee's required beginning date is always determined under section 401(a)(9)(A)(ii) and this A–1 and not section 401(a)(9)(A)(i).

(b) *Distribution calendar year.* A calendar year for which a minimum distribution is required is a distribution calendar year. If an employee's required beginning date is April 1 of the calendar year following the calendar year in which the employee attains age 70½, the employee's first distribution calendar year is the year the employee attains age 70½. If an employee's required beginning date is April 1 of the calendar year following the calendar year in which the employee retires, the employee's first distribution calendar year is the calendar year in which the employee retires. In the case of distributions to be made in accordance with the life expectancy rule in § 1.401(a)(9)–3 and in section 401(a)(9)(B)(iii) and (iv), the first distribution calendar year is the calendar year containing the date described in A–3(a) or A–3(b) of § 1.401(a)(9)–3, whichever is applicable.

(c) *Time for distributions.* The distribution required to be made on or before the employee's required beginning date shall be treated as the distribution required for the employee's first distribution calendar year (as defined in paragraph (b) of this A–1). The required minimum distribution for other distribution calendar years, including the required minimum distribution for the distribution calendar year in which the employee's required beginning date occurs, must be made on or before the end of that distribution calendar year.

(d) *Minimum distribution incidental benefit requirement.* If distributions of an employee's account balance under a defined contribution plan are made in accordance with this section, the minimum distribution incidental benefit requirement of section 401(a)(9)(G) is satisfied. Further, with respect to the retirement benefits provided by that account balance, to the extent the incidental benefit requirement of § 1.401–1(b)(1)(i) requires a distribution, that requirement is deemed to be satisfied if distributions satisfy the minimum distribution incidental benefit requirement of section 401(a)(9)(G) and this section.

(e) *Annuity contracts.* Instead of satisfying this A–1, the minimum distribution requirement may be satisfied by the purchase of an annuity contract from an insurance company in accordance with A–4 of § 1.401(a)(9)-6T with the employee's entire individual account. If such an annuity is purchased after distributions are required to commence (the required beginning date, in the case of distributions commencing before death, or the date determined under A–3 of § 1.401(a)(9)-3, in the case of distributions commencing after death), payments under the annuity contract purchased will satisfy section 401(a)(9) for distribution calendar years after the calendar year of the purchase if payments under the annuity contract are made in accordance with § 1.401(a)(9)-6T. In such a case, payments under the annuity contract will be treated as distributions from the individual account for purposes of determining if the individual account satisfies section 401(a)(9) for the calendar year of the purchase. An

employee may also purchase an annuity contract with a portion of the employee's account under the rules of A–2(a)(3) of § 1.401(a)(9)-8.

Q–2. If an employee's benefit is in the form of an individual account and, in any calendar year, the amount distributed exceeds the minimum required, will credit be given in subsequent calendar years for such excess distribution?

A–2. If, for any distribution calendar year, the amount distributed exceeds the minimum required, no credit will be given in subsequent calendar years for such excess distribution.

Q–3. What is the amount of the account of an employee used for determining the employee's required minimum distribution in the case of an individual account?

A–3. (a) In the case of an individual account, the benefit used in determining the required minimum distribution for a distribution calendar year is the account balance as of the last valuation date in the calendar year immediately preceding that distribution calendar year (valuation calendar year) adjusted in accordance with paragraphs (b) and (c) of this A–3.

(b) The account balance is increased by the amount of any contributions or forfeitures allocated to the account balance as of dates in the valuation calendar year after the valuation date. For this purpose, contributions that are allocated to the account balance as of dates in the valuation calendar year after the valuation date, but that are not actually made during the valuation calendar year, are permitted to be excluded.

(c) The account balance is decreased by distributions made in the valuation calendar year after the valuation date.

(d) If an amount is distributed by one plan and rolled over to another plan (receiving plan), A–2 of § 1.401(a)(9)-7 provides additional rules for determining the benefit and required minimum distribution under the receiving plan. If an amount is transferred from one plan (transferor plan) to another plan (transferee plan), A–3 and A–4 of § 1.401(a)(9)-7 provide additional rules for determining the amount of the required minimum distribution and the benefit under both the transferor and transferee plans.

Q–4. For required minimum distributions during an employee's lifetime, what is the applicable distribution period?

A–4. (a) *General rule.* Except as provided in paragraph (b) of this A–4, the applicable distribution period for required minimum distributions for distribution calendar years up to and including the distribution calendar year that includes the employee's date of death is determined using the Uniform Lifetime Table in A–2 of § 1.401(a)(9)-9 for the employee's age as of the employee's birthday in the relevant distribution calendar year. If an employee dies on or after the required beginning date, the distribution period applicable for calculating the amount that must be distributed during the distribution calendar year that includes the employee's death is determined as if the employee had lived throughout that year. Thus, a minimum required distribution, determined as if the employee had lived throughout that year, is required for the year of the employee's death and that amount must be distributed to a beneficiary to the extent it has not already been distributed to the employee.

(b) *Spouse is sole beneficiary*—(1) *General rule.* Except as otherwise provided in paragraph (b)(2) of this A–4, if the sole designated beneficiary of an employee is the employee's surviving spouse, for required minimum distributions during the employee's lifetime, the applicable distribution period is the longer of the distribution period determined in accordance with paragraph (a) of this A–4 or the joint life expectancy of the employee and spouse using the employee's and spouse's attained ages as of the employee's and the spouse's birthdays in the distribution calendar year. The spouse is sole designated beneficiary for purposes of determining the applicable distribution period for a distribution calendar year during the employee's lifetime only if the spouse is the sole beneficiary of the employee's entire interest at all times during the distribution calendar year.

(2) *Change in marital status.* If the employee and the employee's spouse are married on January 1 of a distribution calendar year, but do not remain married throughout that year (i.e., the employee or the employee's spouse die or they become divorced during that year), the employee will not fail to have a spouse as the employee's sole beneficiary for that year merely because they are not married throughout that year. If an employee's spouse predeceases the employee, the spouse will not fail to be the employee's sole beneficiary for the distribution calendar year that includes the date of the spouse's death solely because, for the period remaining in that year after the spouse's death, someone other than the spouse is named as beneficiary. However, the change in beneficiary due to the death or divorce of the spouse will be effective for purposes of determining the applicable distribution period under section 401(a)(9) in the distribution calendar year following the distribution calendar year that includes the date of the spouse's death or divorce.

Q–5. For required minimum distributions after an employee's death, what is the applicable distribution period?

A–5. (a) *Death on or after the employee's required beginning date.* If an employee dies after distribution has begun as determined under A–6 of § 1.401(a)(9)–2 (generally on or after the employee's required beginning date), in order to satisfy section 401(a)(9)(B)(i), the applicable distribution period for distribution calendar years after the distribution calendar year containing the employee's date of death is either—

(1) If the employee has a designated beneficiary as of the date determined under A–4 of § 1.401(a)(9)–4, the longer of—

(i) The remaining life expectancy of the employee's designated beneficiary determined in accordance with paragraph (c)(1) or (2) of this A–5; and

(ii) The remaining life expectancy of the employee determined in accordance with paragraph (c)(3) of this A–5; or

(2) If the employee does not have a designated beneficiary as of the date determined under A–4 of § 1.401(a)(9)–4, the remaining life expectancy of the employee determined in accordance with paragraph (c)(3) of this A–5.

(b) *Death before an employee's required beginning date.* If an employee dies before distribution has begun, as determined under A–5 of § 1.401(a)(9)–2 (generally before the employee's required beginning date), in order to satisfy section 401(a)(9)(B)(iii) or (iv) and the life expectancy rule described in A–1 of § 1.401(a)(9)–3, the applicable distribution period for distribution calendar years after the distribution calendar year containing the employee's date of death is determined in accordance with paragraph (c) of this A–5. See A–4 of § 1.401(a)(9)–3 to determine when the 5-year rule in section 401(a)(9)(B)(ii) applies (e.g., there is no designated beneficiary or the 5-year rule is elected or specified by plan provision).

(c) *Life expectancy*—(1) *Nonspouse designated beneficiary.* Except as otherwise provided in paragraph (c)(2), the applicable distribution period measured by the beneficiary's remaining life expectancy is determined using the beneficiary's age as of the beneficiary's birthday in the calendar year immediately following the calendar year of the employee's death. In subsequent calendar years, the applicable

distribution period is reduced by one for each calendar year that has elapsed after the calendar year immediately following the calendar year of the employee's death.

(2) *Spouse designated beneficiary.* If the surviving spouse of the employee is the employee's sole beneficiary, the applicable distribution period is measured by the surviving spouse's life expectancy using the surviving spouse's birthday for each distribution calendar year after the calendar year of the employee's death up through the calendar year of the spouse's death. For calendar years after the calendar year of the spouse's death, the applicable distribution period is the life expectancy of the spouse using the age of the spouse as of the spouse's birthday in the calendar year of the spouse's death, reduced by one for each calendar year that has elapsed after the calendar year of the spouse's death.

(3) *No designated beneficiary.* If the employee does not have a designated beneficiary, the applicable distribution period measured by the employee's remaining life expectancy is the life expectancy of the employee using the age of the employee as of the employee's birthday in the calendar year of the employee's death. In subsequent calendar years the applicable distribution period is reduced by one for each calendar year that has elapsed after the calendar year of the employee's death.

Q–6. What life expectancies must be used for purposes of determining required minimum distributions under section 401(a)(9)?

A–6. Life expectancies for purposes of determining required minimum distributions under section 401(a)(9) must be computed using the Single Life Table in A–1 of § 1.401(a)(9)–9 and the Joint and Last Survivor Table in A–3 of § 1.401(a)(9)–9.

Q–7. If an employee has more than one designated beneficiary, which designated beneficiary's life expectancy will be used to determine the applicable distribution period?

A–7. (a) *General rule*—(1) Except as otherwise provided in paragraph (c) of this A–7, if more than one individual is designated as a beneficiary with respect to an employee as of the applicable date for determining the designated beneficiary under A–4 of § 1.401(a)(9)–4, the designated beneficiary with the shortest life expectancy will be the designated beneficiary for purposes of determining the applicable distribution period.

(2) See A–3 of § 1.401(a)(9)-4 for rules that apply if a person other than an individual is designated as a beneficiary and see A–2 and A–3 of § 1.401(a)(9)-8 for special rules that apply if an employee's benefit under a plan is divided into separate accounts and the beneficiaries with respect to a separate account differ from the beneficiaries of another separate account.

(b) *Contingent beneficiary.* Except as provided in paragraph (c)(1) of this A–7, if a beneficiary's entitlement to an employee's benefit after the employee's death is a contingent right, such contingent beneficiary is nevertheless considered to be a beneficiary for purposes of determining whether a person other than an individual is designated as a beneficiary (resulting in the employee being treated as having no designated beneficiary under the rules of A–3 of § 1.401(a)(9)-4) and which designated beneficiary has the shortest life expectancy under paragraph (a) of this A–7.

(c) *Successor beneficiary*—(1) A person will not be considered a beneficiary for purposes of determining who is the beneficiary with the shortest life expectancy under paragraph (a) of this A–7, or whether a person who is not an individual is a beneficiary, merely because the person could become the successor to the interest of one of the employee's beneficiaries after that beneficiary's death. However, the preceding sentence does not apply to a person who has any right (including a contingent right) to an employee's benefit beyond being a mere potential successor to the interest of one of the employee's beneficiaries upon that beneficiary's death. Thus, for example, if the first beneficiary has a right to all income with respect to an employee's individual account during that beneficiary's life and a second beneficiary has a right to the principal but only after the death of the first income beneficiary (any portion of the principal distributed during the life of the first income beneficiary to be held in trust until that first beneficiary's death), both beneficiaries must be taken into account in determining the beneficiary with the shortest life expectancy and whether only individuals are beneficiaries.

(2) If the individual beneficiary whose life expectancy is being used to calculate the distribution period dies after September 30 of the calendar year following the calendar year of the employee's death, such beneficiary's remaining life expectancy will be used to determine the distribution period without regard to the life expectancy of the subsequent beneficiary.

(3) This paragraph (c) is illustrated by the following examples:

Example 1. (i) Employer M maintains a defined contribution plan, Plan X. Employee A, an employee of M, died in 2005 at the age of 55, survived by spouse, B, who was 50 years old. Prior to A's death, M had established an account balance for A in Plan X. A's account balance is invested only in productive assets. A named a testamentary trust (Trust P) established under A's will as the beneficiary of all amounts payable from A's account in Plan X after A's death. A copy of the Trust P and a list of the trust beneficiaries were provided to the plan administrator of Plan X by October 31 of the calendar year following the calendar year of A's death. As of the date of A's death, the Trust P was irrevocable and was a valid trust under the laws of the state of A's domicile. A's account balance in Plan X was includible in *A*'s gross estate under § 2039.

(ii) Under the terms of Trust P, all trust income is payable annually to B, and no one has the power to appoint Trust P principal to any person other than B. A's children, who are all younger than B, are the sole remainder beneficiaries of the Trust P. No other person has a beneficial interest in Trust P. Under the terms of the Trust P, B has the power, exercisable annually, to compel the trustee to withdraw from A's account balance in Plan X an amount equal to the income earned on the assets held in A's account in Plan X during the calendar year and to distribute that amount through Trust P to B. Plan X contains no prohibition on withdrawal from A's account of amounts in excess of the annual required minimum distributions under section 401(a)(9). In accordance with the terms of Plan X, the trustee of Trust P elects, in order to satisfy section 401(a)(9), to receive annual required minimum distributions using the life expectancy rule in section 401(a)(9)(B)(iii) for distributions over a distribution period equal to B's life expectancy. If B exercises the withdrawal power, the trustee must withdraw from A's account under Plan X the greater of the amount of income earned in the account during the calendar year or the required minimum distribution. However, under the terms of Trust P, and applicable state law, only the portion of the Plan X distribution received by the trustee equal to the income earned by A's account in Plan X is required to be distributed to B (along with any other trust income.)

(iii) Because some amounts distributed from A's account in Plan X to Trust P may be accumulated in Trust P during B's lifetime for the benefit of A's children, as remaindermen beneficiaries of Trust P, even though access to those amounts are delayed until after B's death, A's children are beneficiaries of A's account in Plan X in addition to B and B is not the sole designated beneficiary of A's account. Thus the designated beneficiary used to determine the distribution period from A's account in Plan X is the beneficiary with the shortest life expectancy. B's life expectancy is the shortest of all the potential beneficiaries of the testamentary trust's interest in A's account in Plan X (including remainder beneficiaries). Thus, the distribution period for purposes of section 401(a)(9)(B)(iii) is B's life expectancy. Because B is not the sole designated

beneficiary of the testamentary trust's interest in A's account in Plan X, the special rule in 401(a)(9)(B)(iv) is not available and the annual required minimum distributions from the account to Trust M must begin no later than the end of the calendar year immediately following the calendar year of A's death.

Example 2. (i) The facts are the same as *Example 1* except that the testamentary trust instrument provides that all amounts distributed from A's account in Plan X to the trustee while B is alive will be paid directly to B upon receipt by the trustee of Trust P.

(ii) In this case, B is the sole designated beneficiary of A's account in Plan X for purposes of determining the designated beneficiary under section 401(a)(9)(B)(iii) and (iv). No amounts distributed from A's account in Plan X to Trust P are accumulated in Trust P during B's lifetime for the benefit of any other beneficiary. Therefore, the residuary beneficiaries of Trust P are mere potential successors to B's interest in Plan X. Because B is the sole beneficiary of the testamentary trust's interest in A's account in Plan X, the annual required minimum distributions from A's account to Trust P must begin no later than the end of the calendar year in which A would have attained age 70½, rather than the calendar year immediately following the calendar year of A's death.

Q–8. If a portion of an employee's individual account is not vested as of the employee's required beginning date, how is the determination of the required minimum distribution affected?

A–8. If the employee's benefit is in the form of an individual account, the benefit used to determine the required minimum distribution for any distribution calendar year will be determined in accordance with A–1 of this section without regard to whether or not all of the employee's benefit is vested. If any portion of the employee's benefit is not vested, distributions will be treated as being paid from the vested portion of the benefit first. If, as of the end of a distribution calendar year (or as of the employee's required beginning date, in the case of the employee's first distribution calendar year), the total amount of the employee's vested benefit is less than the required minimum distribution for the calendar year, only the vested portion, if any, of the employee's benefit is required to be distributed by the end of the calendar year (or, if applicable, by the employee's required beginning date). However, the required minimum distribution for the subsequent distribution calendar year must be increased by the sum of amounts not distributed in prior calendar years because the employee's vested benefit was less than the required minimum distribution.

Q–9. Which amounts distributed from an individual account are taken into account in determining whether section 401(a)(9) is satisfied and which amounts are not taken into account in determining whether section 401(a)(9) is satisfied?

A–9. (a) *General rule.* Except as provided in paragraph (b), all amounts distributed from an individual account are distributions that are taken into account in determining whether section 401(a)(9) is satisfied, regardless of whether the amount is includible in income. Thus, for example, amounts that are excluded from income as recovery of investment in the contract under section 72 are taken into account for purposes of determining whether section 401(a)(9) is satisfied for a distribution calendar year. Similarly, amounts excluded from income as net unrealized appreciation on employer securities also are amounts distributed for purposes of determining if section 401(a)(9) is satisfied.

(b) *Exceptions.* The following amounts are not taken into account in determining whether the required minimum amount has been distributed for a calendar year:

(1) Elective deferrals and employee contributions that, pursuant to § 1.415–6(b)(6)(iv), are returned (together with the income allocable to these corrective distributions) as a result of the application of the section 415 limitations.

(2) Corrective distributions of excess deferrals as described in § 1.402(g)-1(e)(3), together with the income allocable to these distributions.

(3) Corrective distributions of excess contributions under a qualified cash or deferred arrangement under section 401(k)(8) and excess aggregate contributions under section 401(m)(6), together with the income allocable to these distributions.

(4) Loans that are treated as deemed distributions pursuant to section 72(p).

(5) Dividends described in section 404(k) that are paid on employer securities. (Amounts paid to the plan that, pursuant to section 404(k)(2)(A)(iii)(II), are included in the account balance and subsequently distributed from the account lose their character as dividends.)

(6) The costs of life insurance coverage (P.S. 58 costs).

(7) Similar items designated by the Commissioner in revenue rulings, notices, and other guidance published in the Internal Revenue Bulletin. See § 601.601(d)(2)(ii)(b) of this chapter.

§ 1.401(a)(9)-6T Required minimum distributions for defined benefit plans and annuity contracts (temporary).

Q–1. How must distributions under a defined benefit plan be paid in order to satisfy section 401(a)(9)?

A–1. (a) *General rules.* In order to satisfy section 401(a)(9), except as otherwise provided in this A–1, distributions under a defined benefit plan must be paid in the form of periodic annuity payments for the employee's life (or the joint lives of the employee and beneficiary) or over a period certain that does not exceed the maximum length of the period certain determined in accordance with A–3 of this section. The interval between payments for the annuity must be uniform over the entire distribution period and must not exceed one year. Once payments have commenced over a period certain, the period certain may not be changed even if the period certain is shorter than the maximum permitted. Life annuity payments must satisfy the minimum distribution incidental benefit requirements of A–2 of this section. Except as otherwise provided in A–4(b) of this section, all payments (life and period certain) also must either be nonincreasing or increase only in accordance with one or more of the following:

(1) With an annual percentage increase that does not exceed the annual percentage increase in a cost-of-living index that is based on prices of all items and issued by the Bureau of Labor Statistics;

(2) To the extent of the reduction in the amount of the employee's payments to provide for a survivor benefit upon death, but only if the beneficiary whose life was being used to determine the period described in section 401(a)(9)(A)(ii) over which payments were being made dies or is no longer the employee's beneficiary pursuant to a qualified domestic relations order within the meaning of section 414(p);

(3) To provide cash refunds of employee contributions upon the employee's death; or

(4) To pay increased benefits that result from a plan amendment.

(b) *Life annuity with period certain.* The annuity may be a life annuity (or joint and survivor annuity) with a period certain if the life (or lives, if applicable) and period certain each meet the requirements of paragraph (a) of this A–1. For purposes of this section, if distributions are permitted to be made over the lives of the employee and the designated beneficiary, references to a life annuity include a joint and survivor annuity.

(c) *Annuity commencement.* (1) Annuity payments must commence on or before the employee's required beginning date (within the meaning of A–2 of § 1.401(a)(9)–2). The first payment, which must be made on or before the employee's required beginning date, must be the payment which is required for one payment interval. The second payment need not be made until the end of the next payment interval even if that payment interval ends in the next calendar year. Similarly, in the case of distributions commencing after death in accordance with section 401(a)(9)(B)(iii) and (iv), the first payment, which must be made on or before the date determined under A–3(a) or (b) (whichever is applicable) of § 1.401(a)(9)–3, must be the payment which is required for one payment interval. Payment intervals are the periods for which payments are received, e.g., bimonthly, monthly, semi-annually, or annually. All benefit accruals as of the last day of the first distribution calendar year must be included in the calculation of the amount of annuity payments for payment intervals ending on or after the employee's required beginning date.

(2) This paragraph (c) is illustrated by the following example:

Example. A defined benefit plan (Plan X) provides monthly annuity payments of $500 for the life of unmarried participants with a 10-year period certain. An unmarried, retired participant (A) in Plan X attains age 70½ in 2005. In order to meet the requirements of this paragraph, the first monthly payment of $500 must be made on behalf of A on or before April 1, 2006, and the payments must continue to be made in monthly payments of $500 thereafter for the life and 10-year period certain.

(d) *Lump sum distributions.* In the case of a lump sum distribution of an employee's entire accrued benefit during a distribution calendar year, the amount that is the required minimum distribution for the distribution calendar year (and thus not eligible for rollover under section 402(c)) is determined using either the rule in paragraph (d)(1) or (d)(2) of this A–1.

(1) The portion of the single sum distribution that is a required minimum distribution is determined by treating the single sum distribution as a distribution from an individual account plan and treating the amount of the single sum distribution as the employee's account balance as of the end of the relevant valuation calendar year. If the single sum distribution is being made in the calendar year containing the required beginning date and the required minimum distribution for the employee's first distribution calendar year has not been distributed, the portion of the single sum distribution that represents the required minimum distribution for the employee's first and second distribution calendar years is not eligible for rollover.

(2) The portion of the single sum distribution that is a required minimum distribution is permitted to be determined by expressing the employee's benefit as an annuity that would satisfy this section with an annuity starting date as of the first day of the distribution calendar year for which the required minimum distribution is being determined, and treating one year of annuity payments as the required minimum distribution for that year, and not eligible for rollover. If the single sum distribution is being made in the calendar year containing the required beginning date and the required minimum distribution for the employee's first distribution calendar year has not been made, the benefit must be expressed as an annuity with an annuity starting date as of the first day of the first distribution calendar year and the payments for the first two calendar years would be treated as required minimum distributions, and not eligible for rollover.

(e) *Death benefits.* The rules prohibiting increasing payments under an annuity apply to payments made upon the death of the employee. The preceding sentence will not apply to an increase due to an ancillary death benefit described in this paragraph (e). A death benefit with respect to an employee's benefit is an ancillary death benefit for purposes of this A–1 if—

(1) It is not paid as part of the employee's accrued benefit or under any optional form of the employee's benefit, and

(2) The death benefit, together with any other potential payments with respect to the employee's benefit that may be provided to a survivor, satisfy the incidental benefit requirement of § 1.401–1(b)(1)(i),

(f) *Additional guidance.* Additional guidance regarding how distributions under a defined benefit plan must be paid in order to satisfy section 401(a)(9) may be issued by the Commissioner in revenue rulings, notices, or other guidance published in the Internal Revenue Bulletin. See § 601.601(d)(2)(ii)(b) of this chapter.

Q–2. How must distributions in the form of a life (or joint and survivor) annuity be made in order to satisfy the minimum distribution incidental benefit (MDIB) requirement of section 401(a)(9)(G) and the distribution component of the incidental benefit requirement of § 1.401–1(b)(1)(i)?

A–2. (a) *Life annuity for employee.* If the employee's benefit is payable in the form of a life annuity for the life of the employee satisfying section 401(a)(9) without regard to the MDIB requirement, the MDIB requirement of section 401(a)(9)(G) will be satisfied.

(b) *Joint and survivor annuity, spouse beneficiary.* If the employee's sole beneficiary, as of the annuity starting date for annuity payments, is the employee's spouse and the distributions satisfy section 401(a)(9) without regard to the MDIB requirement, the distributions to the employee will be deemed to satisfy the MDIB requirement of section 401(a)(9)(G). For example, if an employee's benefit is being distributed in the form of a joint and survivor annuity for the lives of the employee and the employee's spouse and the spouse is the sole beneficiary of the employee, the amount of the periodic payment payable to the spouse is permitted to be 100 percent of the annuity payment payable to the employee regardless of the difference in the ages between the employee and the employee's spouse. The amount of the annuity payments must satisfy A–1 of this section (or A–4 of this section, if applicable).

(c) *Joint and survivor annuity, nonspouse beneficiary*—(1) *Explanation of rule.* If distributions commence under a distribution option that is in the form of a joint and survivor annuity for the joint lives of the employee and a beneficiary other than the employee's spouse, the minimum distribution incidental benefit requirement will not be satisfied as of the date distributions commence unless the distribution option provides that annuity payments to be made to the employee on and after the employee's required beginning date will satisfy the conditions of this paragraph (c). The periodic annuity payment payable to the survivor must not at any time on and after the employee's required beginning date exceed the applicable percentage of the annuity payment payable to the employee using the table in paragraph (c)(2) of this A–2. The applicable percentage is based on the excess of the age of the employee on the employee's birthday in a calendar year over the age of the beneficiary as of the beneficiary's birthday in that calendar year. Additionally, the amount of the annuity payments must satisfy A–1 of this section (or A–4 of this section, if applicable). In the case of an annuity which provides for increasing payments, the requirement of this paragraph (c) will be satisfied if the

increase is determined in the same manner for the employee and the beneficiary.

(2) *Table.*

Excess of age of employee over age of beneficiary	Applicable percentage
10 years or less	100
11	96
12	93
13	90
14	87
15	84
16	82
17	79
18	77
19	75
20	73
21	72
22	70
23	68
24	67
25	66
26	64
27	63
28	62
29	61
30	60
31	59
32	59
33	58
34	57
35	56
36	56
37	55
38	55
39	54
40	54
41	53
42	53
43	53
44 and greater	52

(3) *Example.* This paragraph (c) is illustrated by the following example:

Example. Distributions commence on January 1, 2003 to an employee (Z), born March 1, 1937, after retirement at age 65. Z's daughter (Y), born February 5, 1967, is Z's beneficiary. The distributions are in the form of a joint and survivor annuity for the lives of Z and Y with payments of $500 a month to Z and upon Z's death of $500 a month to Y, i.e., the projected monthly payment to Y is 100 percent of the monthly amount payable to Z. There is no provision under the option for a change in the projected payments to Y, and corresponding increase to Z, as of April 1, 2008, Z's required beginning date. Accordingly, under A–10 of this section, compliance with the rules of this section is determined as of the annuity starting date. Consequently, as of January 1, 2003 (the annuity starting date) the plan does not satisfy the MDIB requirement because, as of such date, the distribution option provides that, as of Z's required beginning date, the monthly payment to Y upon Z's death will exceed 60 percent of Z's monthly payment (the maximum percentage for a difference of ages of 30 years).

(d) *Period certain and annuity features.* If a distribution form includes a life annuity and a period certain, the amount of the annuity payments payable to the beneficiary need not be reduced during the period certain, but in the case of a joint and survivor annuity with a period certain, the amount of the annuity payments payable to the beneficiary must satisfy paragraph (c) of this A–2 after the expiration of the period certain.

(e) *Deemed satisfaction of incidental benefit rule.* Except in the case of distributions with respect to an employee's benefit that include an ancillary death benefit described in paragraph A–1(e) of this section, to the extent the incidental benefit requirement of § 1.401–1(b)(1)(i) requires a distribution, that requirement is deemed to be satisfied if distributions satisfy the minimum distribution incidental benefit requirement of this A–2. If the employee's benefits include an ancillary death benefit described in paragraph A–1(e) of this section, the benefits must be distributed in accordance with the incidental benefit requirement described in § 1.401–1(b)(1)(i) and must also satisfy the minimum distribution incidental benefit requirement of this A–2.

Q–3. How long is a period certain under a defined benefit plan permitted to extend?

A–3. (a) *Distributions commencing during the employee's life.* The period certain for any annuity distributions commencing during the life of the employee with an annuity starting date on or after the employee's required beginning date generally is not permitted to exceed the applicable distribution period for the employee (determined in accordance with the Uniform Lifetime Table in A–2 of § 1.401(a)(9)–9) for the calendar year that contains the annuity starting date. See A–10 for the rule for annuity payments with an annuity starting date before the required beginning date. However, if the employee's sole beneficiary is the employee's spouse and the annuity provides only a period certain and no life annuity, the period certain is permitted to be as long as the joint life and last survivor expectancy of the employee and the employee's spouse, if longer than the applicable distribution period for the employee.

(b) *Distributions commencing after the employee's death.* (1) If annuity distributions commence after the death of the employee under the life expectancy rule (under section 401(a)(9)(B)(iii) or (iv)), the period certain for any distributions commencing after death cannot exceed the applicable distribution period determined under A–5(b) of § 1.401(a)(9)–5 for the distribution calendar year that contains the annuity starting date.

(2) If the annuity starting date is in a calendar year before the first distribution calendar year, the period certain may not exceed the life expectancy of the designated beneficiary using the beneficiary's age in the year that contains the annuity starting date.

Q–4. Will a plan fail to satisfy section 401(a)(9) merely because distributions are made from an annuity contract which is purchased from an insurance company?

A–4. (a) *General rule.* A plan will not fail to satisfy section 401(a)(9) merely because distributions are made from an annuity contract which is purchased with the employee's benefit by the plan from an insurance company, as long as the payments satisfy the requirements of this section. If the annuity contract is purchased after the required beginning date, the first payment interval must begin on or before the purchase date and the payment required for one payment interval must be made no later than the end of such payment interval. If the payments actually made under the annuity contract do not meet the requirements of section 401(a)(9), the plan fails to satisfy section 401(a)(9).

(b) *Permitted increases.* In the case of an annuity contract purchased from an insurance company with an employee's account balance under a defined contribution plan or under a section 403(a) annuity plan, if the total future expected payments (determined in accordance with paragraph (c)(3) of this A–4) exceed the account value being annuitized, the payments under the annuity will not fail to satisfy the nonincreasing payment requirement in A–1(a) of this section merely because the payments are increased in accordance with one or more of the following—

(1) By a constant percentage, applied not less frequently than annually;

(2) To provide a payment upon the death of the employee equal to the excess of the account value being annuitized over the total of payments before the death of the employee.

(3) As a result of dividend payments or other payments that result from actuarial gains, but only if actuarial gain is measured no less frequently than annually and the resulting dividend payments or other payments are either paid no later than the year following the year for which the actuarial experience is measured or paid in the same form as the payment of the annuity over the remaining period of the annuity (beginning no later than the year

following the year for which the actuarial experience is measured);

(4) As a final payment under the annuity contract, but only if the payment does not exceed the total future expected payments as of the date of the payment; or

(5) As a partial distribution under the contract, but only if the contract provides for a final payment as of the date of partial distribution that satisfies paragraph (b)(4) of this A–4 and the future payments under the contract are reduced by multiplying the otherwise applicable future payments by a fraction, the numerator of which is the excess of that final payment over the amount of the partial distribution and the denominator of which is the amount of that final payment. For the purpose of determining this ratio, the denominator is reduced by the amount of any regularly scheduled payment due on the date of the partial distribution.

(c) *Definitions.* For purposes of this A–4, the following definitions apply—

(1) Account value being annuitized means the value of the employee's entire interest (within the meaning of A–12 of this section) being annuitized (valued as of the date annuity payments commence) or, in the case of a defined contribution plan, the value of the employee's account balance used to purchase an immediate annuity under the contract.

(2) Actuarial gain means the difference between the actuarial assumptions used in pricing (i.e., investment return, mortality, expense, and other similar assumptions) and the actual experience with respect to those assumptions. Actuarial gain also includes differences between the actuarial assumptions used in pricing when an annuity was purchased and actuarial assumptions used in pricing annuities at the time the actuarial gain is determined.

(3) Total future expected payments means the total future payments to be made under the annuity contract as of the date of the determination, calculated using the Single Life Table in A–1 of § 1.401(a)(9)–9 (or, if applicable, the Joint and Last Survivor Table in A–3 of in § 1.401(a)(9)–9) for annuitants who are still alive, without regard to any increases in annuity payments after the date of determination, and taking into account any remaining period certain.

(d) *Examples.* This A–4 is illustrated by the following examples:

Example 1. A participant (Z1) in defined contribution plan X attains age 70 on March 5, 2005, and thus, attains age 70½ in 2005. Z1 elects to purchase annuity Contract Y1 from Insurance Company W in 2005. Contract Y1 is a life annuity contract with a 10-year period certain. Contract Y1 provides for an initial annual payment calculated with an assumed interest rate (AIR) of 3 percent. Subsequent payments are determined by multiplying the prior year's payment by a fraction the numerator of which is 1 plus the actual return on the separate account assets underlying Contract Y1 since the preceding payment and the denominator of which is 1 plus the AIR during that period. The value of Z1's account balance in Plan X at the time of purchase is $105,000, and the purchase price of Contract Y1 is $105,000. Contract Y1 provides Z1 with an initial payment of $7,200 at the time of purchase in 2005. The total future expected payments to Z1 under Contract Y1 are $122,400, calculated as the initial payment of $7,200 multiplied by the age 70 life expectancy of 17. Because the total future expected payments on the purchase date exceed the account value used to purchase Contract Y1 and payments may only increase as a result of actuarial gain, with such increases, beginning no later than the next year, paid in the same form as the payment of the annuity over the remaining period of the annuity, distributions received by Z1 from Contract Y1 meet the requirements under paragraph (b)(3) of this A–4.

Example 2. A participant (Z2) in defined contribution plan X attains age 70 on May 1, 2005, and thus, attains age 70½ in 2005. Z2 elects to purchase annuity Contract Y2 from Insurance Company W in 2005. Contract Y2 is a participating life annuity contract with a 10-year period certain. Contract Y2 provides for level annual payments with dividends paid in a lump sum in the year after the year for which the actuarial experience is measured or paid out levelly beginning in the year after the year for which the actuarial gain is measured over the remaining lifetime and period certain, i.e., the period certain ends at the same time as the original period certain. Dividends are determined annually by the Board of Directors of Company W based upon a comparison of actual actuarial experience to expected actuarial experience in the past year. The value of Z2's account balance in Plan X at the time of purchase is $265,000, and the purchase price of Contract Y2 is $265,000. Contract Y2 provides Z2 with an initial payment of $16,000 in 2005. The total future expected payments to Z2 under Contract Y2 are calculated as the annual initial payment of $16,000 multiplied by the age 70 life expectancy of 17 for a total of $272,000. Because the total future expected payments on the purchase date exceeds the account value used to purchase Contract Y2 and payments may only increase as a result of actuarial gain, with such increases, beginning no later than the next year, paid in the same form as the payment of the annuity over the remaining period of the annuity, distributions received by Z2 from Contract Y2 meet the requirements under paragraph (b)(3) of this A–4.

Example 3. The facts are the same as in *Example 2* except that the annuity provides a dividend accumulation option under which Z2 may defer receipt of the dividends to a time selected by Z2. Because the dividend accumulation option permits dividends to be paid later than the end of the year following the year for which the actuarial experience is measured or as a stream of payments that only increase as a result of actuarial gain, with such increases beginning no later than the next year, paid in the same form as the payment of the annuity over the remaining period of the annuity in *Example 2,* the dividend accumulation option does not meet the requirements of paragraph (b)(3) of this A–4. Neither does the dividend accumulation option fit within any of the other increases described in paragraph (b) of this A–4. Accordingly, the dividend accumulation option causes the contract, and consequently any distributions from the contract, to fail to meet the requirements of this A–4 and thus fail to satisfy the requirements of section 401(a)(9).

Example 4. The facts are the same as in *Example 2* except that the annuity provides an option under which actuarial gain under the contract is used to provide additional death benefit protection for Z2. Because this option permits payments as a result of actuarial gain to be paid later than the end of the year following the year for which the actuarial experience is measured or as a stream of payments that only increase as a result of actuarial gain, with such increases beginning no later than the next year, paid in the same form as the payment of the annuity over the remaining period of the annuity in *Example 2,* the option does not meet the requirements of paragraph (b)(3) of this A–4. Neither does the option fit within any of the other increases described in paragraph (b) of this A–4. Accordingly, the addition of the option causes the contract, and consequently any distributions from the contract, to fail to meet the requirements of this A–4 and thus fail to satisfy the requirements of section 401(a)(9).

Example 5. A participant (Z3) in defined contribution plan X attains age 70½ in 2005. Z3 elects to purchase annuity contract Y3 from Insurance Company W. Contract Y3 is a life annuity contract with a 20-year period certain (which does not exceed the maximum period certain permitted under A–3(a) of this section) with fixed annual payments increasing 3 percent each year. The value of Z3's account balance in Plan X at the time of purchase is $110,000, and the purchase price of Contract Y3 is $110,000. Contract Y3 provides Z3 with an initial payment of $6,000 at the time of purchase in 2005. The total future expected payments to Z3 under Contract Y3 are $120,000, calculated as the initial annual payment of $6,000 multiplied by the period certain of 20 years. Because the total future expected payments on the purchase date exceed the account value used to purchase Contract Y3 and payments only increase as a constant percentage applied not less frequently than annually, distributions received by Z3 from Contract Y3 meet the requirements under paragraph (b)(1) of this A–4.

Example 6. The facts are the same as in *Example 5* except that the initial payment is $5,400 and the annual rate of increase is 4 percent. In this example, the total future expected payments are $108,000, calculated as the initial payment of $5,400 multiplied by the period certain of 20 years. Because the

total future expected payments are less than the account value of $110,000 used to purchase Contract Y3, distributions received by Z3 do not meet the requirements underparagraph (b) of this A–4 and thus fail to meet the requirements of section 401(a)(9).

Example 7. (i) A participant (Z4) in defined contribution Plan X attains age 78 in 2005. Z4 elects to purchase Contract Y4 from Insurance Company W. Contract Y4 provides for fixed annual payments for 20 years (which does not exceed the maximum period certain permitted under A–3(a) of this section) and provides that, on any payment date, before receiving his payment due on that date, Z4 may cancel Contract Y4 and receive as a final payment an amount equal to his remaining payments discounted with interest at 4 percent. The value of Z4's account balance in Plan X at the time of purchase is $500,000, and the purchase price of Contract Y4 is $500,000. Contract Y4 provides Z4 with an initial payment in 2005 of $35,376.

(ii) Under Contract Y4, the amount that Z4 could receive upon cancellation of Contract Y4 as a final payment, for all possible cancellation dates, will always be less than the total future expected payments on such cancellation date. This is so because the total future expected payments on any such cancellation date is equal to the remaining payments on such date, not discounted, an amount always greater than the final payment amount of these same remaining payments, discounted at 4 percent.

(iii) The total future expected payments to Z4 under Y4 are $707,520, calculated as the annualized initial payment of $35,376 multiplied by the period certain of 20 years. Because the total future expected payments on the purchase date exceed the account value used to purchase Contract Y4 and it is not possible for a final payment under Contract Y4 to ever exceed the total future expected payments on the day of such final payment, distributions received by Z4 under Contract Y4 meet the requirements under paragraph (b)(4) of this A–4.

(iv) As an illustration of the above, if Participant Z4 were to elect to cancel Contract Y4 on the day he was due to receive his eleventh payment, his contractual final payment would be $298,408 (including the $35,376 he was due to receive on that day) which is less than his total future expected payments on that date ($353,760). These amounts are determined as follows. On the day Z4 was to receive his eleventh payment, Z4 was entitled to receive ten future payments of $35,376 (including the payment he was due to receive on that day). The discounted value of an annuity of ten payments of $35,376, with the first payment due on the date of the calculation of the discounted value, and a discount rate of 4 percent, is $298,408. The product of the payment amount of $35,376 multiplied by 10, the number of future payments to which Z4 would be entitled on the day Z4 was to receive the eleventh payment, is $353,760.

Example 8. (i) The facts are the same as in *Example 7* except that the annuity provides an option for partial distributions of less than the final payment amount (the maximum distribution), with payments following such a partial distribution reduced by multiplying the otherwise applicable future payments by a fraction, the numerator of which is the excess of the final payment amount over the amount of the partial distribution and the denominator of which is the amount of that final payment. For the purposes of determining this ratio, the denominator is reduced by the amount of any regularly scheduled payment due on the date of partial distribution. This partial distribution option meets the requirements of paragraph (b)(5) of this A–4.

(ii) To illustrate the workings of this partial distribution option, assume Z4 takes a distribution of $100,000 on the date he was to receive his eleventh payment of $35,376. In such a case, under this partial distribution option, his remaining nine payments, absent any other extraordinary distributions, will be reduced to $26,685. This amount is determined as follows. The numerator of the ratio described in the paragraph above is equal to $ 198,408 (that is, the excess of a total distribution of $298,408 over the partial distribution of $100,000). The denominator of the ratio described in the paragraph above is equal to $263,032 (that is, the maximum distribution on the date of the partial distribution of $298,408 (see *Example 6*) less the regularly scheduled payment of $35,376). Thus, future payments must be multiplied by 75.43 percent (that is, $198,408 divided by $263,032). Thus, his future payments must be $26,685 (that is, $35,376 multiplied by 75.43 percent).

Example 9. (i) A participant (Z5) in defined contribution plan X attains age 70½ in 2005. Z5 elects to purchase annuity Contract Y5 from Insurance Company W in 2005. Contract Y5 is a participating life annuity contract with a 20-year period certain. Contract Y5 provides an initial payment at the time of purchase of 5 percent of the purchase price, a second payment one year from the time of purchase of two percent of the purchase price, and 18 succeeding annual payments each increasing at a constant percentage rate of 16 percent from the preceding payment.

(ii) Contract Y5 fails to meet the requirements of paragraph (b) of this A–4, and thus fails to satisfy the requirements of section 401(a)(9), because the expected total payments without regard to any increases in the annuity payment is only 43 percent of the purchase price (that is, an amount not exceeding the account value used to purchase the annuity), calculated as 5 percent of the purchase price in year one and two percent of the purchase price in each of years two through twenty (or, .05 multiplied by 1 year plus .02 multiplied by 19 years).

Q–5. In the case of annuity distributions under a defined benefit plan, how must additional benefits that accrue after the employee's first distribution calendar year be distributed in order to satisfy section 401(a)(9)?

A–5. (a) In the case of annuity distributions under a defined benefit plan, if any additional benefits accrue in a calendar year after the employee's first distribution calendar year, distribution of the amount that accrues in a calendar year must commence in accordance with A–1 of this section beginning with the first payment interval ending in the calendar year immediately following the calendar year in which such amount accrues.

(b) A plan will not fail to satisfy section 401(a)(9) merely because there is an administrative delay in the commencement of the distribution of the additional benefits accrued in a calendar year, provided that the actual payment of such amount commences as soon as practicable. However, payment must commence no later than the end of the first calendar year following the calendar year in which the additional benefit accrues, and the total amount paid during such first calendar year must be no less than the total amount that was required to be paid during that year under A–5(a) of this section.

Q–6. If a portion of an employee's benefit is not vested as of December 31 of a distribution calendar year, how is the determination of the required minimum distribution affected?

A–6. In the case of annuity distributions from a defined benefit plan, if any portion of the employee's benefit is not vested as of December 31 of a distribution calendar year, the portion that is not vested as of such date will be treated as not having accrued for purposes of determining the required minimum distribution for that distribution calendar year. When an additional portion of the employee's benefit becomes vested, such portion will be treated as an additional accrual. See A–5 of this section for the rules for distributing benefits which accrue under a defined benefit plan after the employee's first distribution calendar year.

Q–7. If an employee (other than a 5-percent owner) retires after the calendar year in which the employee attains age 70½, for what period must the employee's accrued benefit under a defined benefit plan be actuarially increased?

A–7. (a) *Actuarial increase starting date.* If an employee (other than a 5-percent owner) retires after the calendar year in which the employee attains age 70½, in order to satisfy section 401(a)(9)(C)(iii), the employee's accrued benefit under a defined benefit plan must be actuarially increased to take into account any period after age 70½ in which the employee was not receiving any benefits under the plan. The actuarial increase required to satisfy section 401(a)(9)(C)(iii) must be provided for the period starting on the April 1 following the calendar year in which the employee attains age 70½, or January 1, 1997, if later.

(b) *Actuarial increase ending date.* The period for which the actuarial increase must be provided ends on the date on which benefits commence after retirement in an amount sufficient to satisfy section 401(a)(9).

(c) *Nonapplication to plan providing same required beginning date for all employees.* If, as permitted under A–2(e) of § 1.401(a)(9)–2, a plan provides that the required beginning date for purposes of section 401(a)(9) for all employees is April 1 of the calendar year following the calendar year in which the employee attains age 70½ (regardless of whether the employee is a 5-percent owner) and the plan makes distributions in an amount sufficient to satisfy section 401(a)(9) using that required beginning date, no actuarial increase is required under section 401(a)(9)(C)(iii).

(d) *Nonapplication to governmental and church plans.* The actuarial increase required under this A–7 does not apply to a governmental plan (within the meaning of section 414(d)) or a church plan. For purposes of this paragraph, the term *church plan* means a plan maintained by a church for church employees, and the term *church* means any church (as defined in section 3121(w)(3)(A)) or qualified church-controlled organization (as defined in section 3121(w)(3)(B)).

Q–8. What amount of actuarial increase is required under section 401(a)(9)(C)(iii)?

A–8. In order to satisfy section 401(a)(9)(C)(iii), the retirement benefits payable with respect to an employee as of the end of the period for actuarial increases (described in A–7 of this section) must be no less than: the actuarial equivalent of the employee's retirement benefits that would have been payable as of the date the actuarial increase must commence under paragraph (a) of A–7 of this section if benefits had commenced on that date; plus the actuarial equivalent of any additional benefits accrued after that date; reduced by the actuarial equivalent of any distributions made with respect to the employee's retirement benefits after that date. Actuarial equivalence is determined using the plan's assumptions for determining actuarial equivalence for purposes of satisfying section 411.

Q–9. How does the actuarial increase required under section 401(a)(9)(C)(iii) relate to the actuarial increase required under section 411?

A–9. In order for any of an employee's accrued benefit to be nonforfeitable as required under section 411, a defined benefit plan must make an actuarial adjustment to an accrued benefit the payment of which is deferred past normal retirement age. The only exception to this rule is that generally no actuarial adjustment is required to reflect the period during which a benefit is suspended as permitted under section 203(a)(3)(B) of the Employee Retirement Income Security Act of 1974 (ERISA). The actuarial increase required under section 401(a)(9)(C)(iii) for the period described in A–7 of this section is generally the same as, and not in addition to, the actuarial increase required for the same period under section 411 to reflect any delay in the payment of retirement benefits after normal retirement age. However, unlike the actuarial increase required under section 411, the actuarial increase required under section 401(a)(9)(C)(iii) must be provided even during any period during which an employee's benefit has been suspended in accordance with ERISA section 203(a)(3)(B).

Q–10. What rule applies if distributions commence to an employee on a date before the employee's required beginning date over a period permitted under section 401(a)(9)(A)(ii) and the distribution form is an annuity under which distributions are made in accordance with the provisions of A–1 (and if applicable A–4) of this section?

A–10. (a) *General rule.* If distributions commence to an employee on an irrevocable basis (except for acceleration) on a date before the employee's required beginning date over a period permitted under section 401(a)(9)(A)(ii) and the distribution form is an annuity under which distributions are made in accordance with the provisions of A–1 (and, if applicable, A–4) of this section, the annuity starting date will be treated as the required beginning date for purposes of applying the rules of this section and § 1.401(a)(9)–2. Thus, for example, the designated beneficiary distributions will be determined as of the annuity starting date. Similarly, if the employee dies after the annuity starting date but before the required beginning date determined under A–2 of § 1.401(a)(9)–2, after the employee's death, the remaining portion of the employee's interest must continue to be distributed in accordance with this section over the remaining period over which distributions commenced (single or joint lives or period certain, as applicable). The rules in § 1.401(a)(9)–3 and section 401(a)(9)(B)(ii) or (iii) and (iv) do not apply.

(b) *Period certain.* If as of the employee's birthday in the year that contains the annuity starting date, the age of the employee is under 70, the following rule applies in applying the rule in paragraph (a) of A–3 of this section. The applicable distribution period for the employee (determined in accordance with the Uniform Lifetime Table in A–2 of § 1.401(a)(9)–9) is the distribution period for age 70 using the Uniform Lifetime Table in A–2 of § 1.401(a)(9)–9 plus the excess of 70 over age of the employee as of the employee's birthday in the year that contains the annuity starting date.

Q–11. What rule applies if distributions commence on an irrevocable basis (except for acceleration) to the surviving spouse of an employee over a period permitted under section 401(a)(9)(B)(iii)(II) before the date on which distributions are required to commence and the distribution form is an annuity under which distributions are made as of the date distributions commence in accordance with the provisions of A–1 (and if applicable A–4) of this section.

A–11.If distributions commence to the surviving spouse of an employee on an irrevocable basis (except for acceleration) over a period permitted under section 401(a)(9)(B)(iii)(II) before the date on which distributions are required to commence and the distribution form is an annuity under which distributions are made as of the date distributions commence in accordance with the provisions of A–1 (and if applicable A–4) of this section, distributions will be considered to have begun on the actual commencement date for purposes of section 401(a)(9)(B)(iv)(II). Consequently, in such case, A–5 of § 1.401(a)(9)–3 and section 401(a)(9)(B)(ii) and (iii) will not apply upon the death of the surviving spouse as though the surviving spouse were the employee. Instead, the annuity distributions must continue to be made, in accordance with the provisions of A–1 (and if applicable A–4) of this section over the remaining period over which distributions commenced (single life or period certain, as applicable).

Q–12. In the case of an annuity contract under an individual account plan from which annuity payments have not commenced to on an irrevocable basis (except for acceleration), how is section 401(a)(9) satisfied with respect to the employee's or beneficiary's entire interest under the annuity contract for the period prior to the date annuity payments so commence?

A–12. Prior to the date that annuity payments commence on an irrevocable basis (except for acceleration) under an individual account plan from an annuity contract, the interest of an employee or beneficiary under that contract is treated as an individual account for purposes of section 401(a)(9). Thus, the required minimum

distribution for any year with respect to that interest is determined under § 1.401(a)(9)–5 rather than this section. For purposes of applying the rules in § 1.401(a)(9)–5, the entire interest under the annuity contract as of December 31 of the relevant valuation calendar year is treated as the account balance for the valuation calendar year described in A–3 of § 1.401(a)(9)–5. The entire interest under an annuity contract is the dollar amount credited to the employee or beneficiary under the contract plus the actuarial value of any other benefits (such as minimum survivor benefits) that will be provided under the contract. See A–1 of § 1.401(a)(9)–5 for rules relating to the satisfaction of section 401(a)(9) in the year that annuity payments commence and A–2(a)(3) of § 1.401(a)(9)–8.

§ 1.401(a)(9)–7 Rollovers and transfers.

Q–1. If an amount is distributed by one plan (distributing plan) and is rolled over to another plan, is the required minimum distribution under the distributing plan affected by the rollover?

A–1. No, if an amount is distributed by one plan and is rolled over to another plan, the amount distributed is still treated as a distribution by the distributing plan for purposes of section 401(a)(9), notwithstanding the rollover. See A–1 of § 1.402(c)–2 for the definition of a rollover and A–7 of § 1.402(c)–2 for rules for determining the portion of any distribution that is not eligible for rollover because it is a required minimum distribution.

Q–2. If an amount is distributed by one plan (distributing plan) and is rolled over to another plan (receiving plan), how are the benefit and the required minimum distribution under the receiving plan affected?

A–2. If an amount is distributed by one plan (distributing plan) and is rolled over to another plan (receiving plan), the benefit of the employee under the receiving plan is increased by the amount rolled over for purposes of determining the required minimum distribution for the calendar year immediately following the calendar year in which the amount rolled over is distributed. If the amount rolled over is received after the last valuation date in the calendar year under the receiving plan, the benefit of the employee as of such valuation date, adjusted in accordance with A–3 of § 1.401(a)(9)–5, will be increased by the rollover amount valued as of the date of receipt. In addition, if the amount rolled over is received in a different calendar year from the calendar year in which it is distributed, the amount rolled over is deemed to have been received by the receiving plan in the calendar year in which it was distributed.

Q–3. In the case of a transfer of an amount of an employee's benefit from one plan (transferor plan) to another plan (transferee plan), are there any special rules for satisfying section 401(a)(9) or determining the employee's benefit under the transferor plan?

A–3. (a) In the case of a transfer of an amount of an employee's benefit from one plan (transferor plan) to another (transferee plan), the transfer is not treated as a distribution by the transferor plan for purposes of section 401(a)(9). Instead, the benefit of the employee under the transferor plan is decreased by the amount transferred. However, if any portion of an employee's benefit is transferred in a distribution calendar year with respect to that employee, in order to satisfy section 401(a)(9), the transferor plan must determine the amount of the required minimum distribution with respect to that employee for the calendar year of the transfer using the employee's benefit under the transferor plan before the transfer. Additionally, if any portion of an employee's benefit is transferred in the employee's second distribution calendar year but on or before the employee's required beginning date, in order to satisfy section 401(a)(9), the transferor plan must determine the amount of the minimum distribution requirement for the employee's first distribution calendar year based on the employee's benefit under the transferor plan before the transfer. The transferor plan may satisfy the minimum distribution requirement for the calendar year of the transfer (and the prior year if applicable) by segregating the amount which must be distributed from the employee's benefit and not transferring that amount. Such amount may be retained by the transferor plan and must be distributed on or before the date required under section 401(a)(9).

(b) For purposes of determining any required minimum distribution for the calendar year immediately following the calendar year in which the transfer occurs, in the case of a transfer after the last valuation date for the calendar year of the transfer under the transferor plan, the benefit of the employee as of such valuation date, adjusted in accordance with A–3 of § 1.401(a)(9)–5, will be decreased by the amount transferred, valued as of the date of the transfer.

Q–4. If an amount of an employee's benefit is transferred from one plan (transferor plan) to another plan (transferee plan), how are the benefit and the required minimum distribution under the transferee plan affected?

A–4. In the case of a transfer from one plan (transferor plan) to another (transferee plan), the benefit of the employee under the transferee plan is increased by the amount transferred in the same manner as if it were a plan receiving a rollover contribution under A–2 of this section.

Q–5. How is a spinoff, merger or consolidation (as defined in § 1.414(*l*)–1) treated for purposes of determining an employee's benefit and required minimum distribution under section 401(a)(9)?

A–5. For purposes of determining an employee's benefit and required minimum distribution under section 401(a)(9), a spinoff, a merger, or a consolidation (as defined in § 1.414(*l*)–1) will be treated as a transfer of the benefits of the employees involved. Consequently, the benefit and required minimum distribution of each employee involved under the transferor and transferee plans will be determined in accordance with A–3 and A–4 of this section.

§ 1.401(a)(9)–8 Special rules.

Q–1. What distribution rules apply if an employee is a participant in more than one plan?

A–1. If an employee is a participant in more than one plan, the plans in which the employee participates are not permitted to be aggregated for purposes of testing whether the distribution requirements of section 401(a)(9) are met. The distribution of the benefit of the employee under each plan must separately meet the requirements of section 401(a)(9). For this purpose, a plan described in section 414(k) is treated as two separate plans, a defined contribution plan to the extent benefits are based on an individual account and a defined benefit plan with respect to the remaining benefits.

Q–2. If an employee's benefit under a defined contribution plan is divided into separate accounts (or under a defined benefit plan is divided into segregated shares), do the distribution rules in section 401(a)(9) and these regulations apply separately to each separate account?

A–2. (a) *Defined contribution plan.* (1) Except as otherwise provided in this A–2, if an employee's benefit under a defined contribution plan is divided into separate accounts under the plan, the separate accounts will be aggregated for purposes of satisfying the rules in section 401(a)(9). Thus, except as otherwise provided in this A–2, all separate accounts, including a separate account for employee contributions

under section 72(d)(2), will be aggregated for purposes of section 401(a)(9).

(2) If the employee's benefit in a defined contribution plan is divided into separate accounts and the beneficiaries with respect to one separate account differ from the beneficiaries with respect to the other separate accounts of the employee under the plan, for years subsequent to the calendar year containing the date on which the separate accounts were established, or date of death if later, such separate account under the plan is not aggregated with the other separate accounts under the plan in order to determine whether the distributions from such separate account under the plan satisfy section 401(a)(9). Instead, the rules in section 401(a)(9) separately apply to such separate account under the plan. However, the applicable distribution period for each such separate account is determined disregarding the other beneficiaries of the employee's benefit only if the separate account is established on a date no later than the last day of the year following the calendar year of the employee's death. For example, if, in the case of a distribution described in section 401(a)(9)(B)(iii) and (iv), the only beneficiary of a separate account under the plan established on a date no later than the end of the year following the calendar year of the employee's death is the employee's surviving spouse, and beneficiaries other than the surviving spouse are designated with respect to the other separate accounts with respect to the employee, distribution of the spouse's separate account under the plan need not commence until the date determined under the first sentence in A–3(b) of § 1.401(a)(9)–3, even if distribution of the other separate accounts under the plan must commence at an earlier date. Similarly, in the case of a distribution after the death of an employee to which section 401(a)(9)(B)(i) does not apply, distribution from a separate account of an employee established on a date no later than the end of the year following the year of the employee's death may be made over a beneficiary's life expectancy in accordance with section 401(a)(9)(B)(iii) and (iv) even though distributions from other separate accounts under the plan with different beneficiaries are being made in accordance with the 5-year rule in section 401(a)(9)(B)(ii).

(3) A portion of an employee's account balance under a defined contribution plan is permitted to be used to purchase an annuity contract while another portion stays in the account. In that case, the remaining account under the plan must be distributed in accordance with § 1.401(a)(9)–5 in order to satisfy section 401(a)(9) and the annuity payments under the annuity contract must satisfy § 1.401(a)(9)–6T in order to satisfy section 401(a)(9).

(b) *Defined benefit plan.* The rules of paragraph (a)(2) and (3) of this A–2 also apply to benefits under a defined benefit plan where the benefits under the plan are separated into separate identifiable components which are separately distributed.

Q–3. What are separate accounts for purposes of section 401(a)(9)?

A–3. For purposes of section 401(a)(9), separate accounts in an employee's account are separate portions of an employee's benefit reflecting the separate interests of the employee's beneficiaries under the plan as of the date of the employee's death for which separate accounting is maintained. The separate accounting must allocate all post-death investment gains and losses, contributions, and forfeitures, for the period prior to the establishment of the separate accounts on a pro rata basis in a reasonable and consistent manner among the separate accounts. However, once the separate accounts are actually established, the separate accounting can provide for separate investments for each separate account under which gains and losses from the investment of the account are only allocated to that account, or investment gain or losses can continue to be allocated among the separate accounts on a pro rata basis. A separate accounting must allocate any post-death distribution to the separate account of the beneficiary receiving that distribution.

Q–4. If a distribution is required to be made to an employee by section 401(a)(9)(A) or is required to be made to a surviving spouse under section 401(a)(9)(B), must the distribution be made even if the employee, or spouse where applicable, fails to consent to a distribution while a benefit is immediately distributable?

A–4. Yes, section 411(a)(11) and section 417(e) (see §§ 1.411(a)(11)–1(c)(2) and 1.417(e)–1(c)) require employee and spousal consent to certain distributions of plan benefits while such benefits are immediately distributable. If an employee's normal retirement age is later than the employee's required beginning date and, therefore, benefits are still immediately distributable, the plan must, nevertheless, distribute plan benefits to the employee (or where applicable, to the spouse) in a manner that satisfies the requirements of section 401(a)(9). Section 401(a)(9) must be satisfied even though the employee (or spouse, where applicable) fails to consent to the distribution. In such a case, the plan may distribute in the form of a qualified joint and survivor annuity (QJSA) or in the form of a qualified preretirement survivor annuity (QPSA), as applicable, and the consent requirements of sections 411(a)(11) and 417(e) are deemed to be satisfied if the plan has made reasonable efforts to obtain consent from the employee (or spouse if applicable) and if the distribution otherwise meets the requirements of section 417. If, because of section 401(a)(11)(B), the plan is not required to distribute in the form of a QJSA to a employee or a QPSA to a surviving spouse, the plan may distribute the required minimum distribution amount to satisfy section 401(a)(9) and the consent requirements of sections 411(a)(11) and 417(e) are deemed to be satisfied if the plan has made reasonable efforts to obtain consent from the employee (or spouse if applicable) and if the distribution otherwise meets the requirements of section 417.

Q–5. Who is an employee's spouse or surviving spouse for purposes of section 401(a)(9)?

A–5. Except as otherwise provided in A–6(a) of this section (in the case of distributions of a portion of an employee's benefit payable to a former spouse of an employee pursuant to a qualified domestic relations order), for purposes of section 401(a)(9), an individual is a spouse or surviving spouse of an employee if such individual is treated as the employee's spouse under applicable state law. In the case of distributions after the death of an employee, for purposes of determining whether, under the life expectancy rule in section 401(a)(9)(B)(iii) and (iv), the provisions of section 401(a)(9)(B)(iv) apply, the spouse of the employee is determined as of the date of death of the employee.

Q–6. In order to satisfy section 401(a)(9), are there any special rules which apply to the distribution of all or a portion of an employee's benefit payable to an alternate payee pursuant to a qualified domestic relations order as defined in section 414(p) (QDRO)?

A–6. (a) A former spouse to whom all or a portion of the employee's benefit is payable pursuant to a QDRO will be treated as a spouse (including a surviving spouse) of the employee for purposes of section 401(a)(9), including the minimum distribution incidental benefit requirement, regardless of whether the QDRO specifically provides that the former spouse is treated as the

spouse for purposes of sections 401(a)(11) and 417.

(b)(1) If a QDRO provides that an employee's benefit is to be divided and a portion is to be allocated to an alternate payee, such portion will be treated as a separate account (or segregated share) which separately must satisfy the requirements of section 401(a)(9) and may not be aggregated with other separate accounts (or segregated shares) of the employee for purposes of satisfying section 401(a)(9). Except as otherwise provided in paragraph (b)(2) of this A–6, distribution of such separate account allocated to an alternate payee pursuant to a QDRO must be made in accordance with section 401(a)(9). For example, in general, distribution of such account will satisfy section 401(a)(9)(A) if required minimum distributions from such account during the employee's lifetime begin not later than the employee's required beginning date and the required minimum distribution is determined in accordance with § 1.401(a)(9)–5 for each distribution calendar year (using an applicable distribution period determined under A–4 of § 1.401(a)(9)–5 for the employee in the distribution calendar year either using the Uniform Lifetime Table in A–2 of § 1.401(a)(9)–9 or using the joint life expectancy of the employee and a spousal alternate payee in the distribution calendar year if the spousal alternate payee is more than 10 years younger than the employee). The determination of whether distribution from such account after the death of the employee to the alternate payee will be made in accordance with section 401(a)(9)(B)(i) or section 401(a)(9)(B)(ii) or (iii) and (iv) will depend on whether distributions have begun as determined under A–6 of § 1.401(a)(9)–2 (which provides, in general, that distributions are not treated as having begun until the employee's required beginning date even though payments may actually have begun before that date). For example, if the alternate payee dies before the employee and distribution of the separate account allocated to the alternate payee pursuant to the QDRO is to be made to the alternate payee's beneficiary, such beneficiary may be treated as a designated beneficiary for purposes of determining the minimum distribution required from such account after the death of the employee if the beneficiary of the alternate payee is an individual and if such beneficiary is a beneficiary under the plan or specified to or in the plan. Specification in or pursuant to the QDRO is treated as specification to the plan.

(2) Distribution of the separate account allocated to an alternate payee pursuant to a QDRO will satisfy the requirements of section 401(a)(9)(A)(ii) if such account is to be distributed, beginning not later than the employee's required beginning date, over the life of the alternate payee (or over a period not extending beyond the life expectancy of the alternate payee). Also, if the plan permits the employee to elect whether distribution upon the death of the employee will be made in accordance with the 5-year rule in section 401(a)(9)(B)(ii) or the life expectancy rule in section 401(a)(9)(B)(iii) and (iv) pursuant to A–4(c) of § 1.401(a)(9)–3, such election is to be made only by the alternate payee for purposes of distributing the separate account allocated to the alternate payee pursuant to the QDRO. If the alternate payee dies after distribution of the separate account allocated to the alternate payee pursuant to a QDRO has begun (determined under A–6 of § 1.401(a)(9)–2) but before the employee dies, distribution of the remaining portion of that portion of the benefit allocated to the alternate payee must be made in accordance with the rules in § 1.401(a)(9)–5 or 1.401(a)(9)–6T for distributions during the life of the employee. Only after the death of the employee is the amount of the required minimum distribution determined in accordance with the rules of section 401(a)(9)(B).

(c) If a QDRO does not provide that an employee's benefit is to be divided but provides that a portion of an employee's benefit (otherwise payable to the employee) is to be paid to an alternate payee, such portion will not be treated as a separate account (or segregated share) of the employee. Instead, such portion will be aggregated with any amount distributed to the employee and will be treated as having been distributed to the employee for purposes of determining whether section 401(a)(9) has been satisfied with respect to that employee.

Q–7. Will a plan fail to satisfy section 401(a)(9) merely because it fails to distribute an amount otherwise required to be distributed by section 401(a)(9) during the period in which the issue of whether a domestic relations order is a QDRO is being determined?

A–7. A plan will not fail to satisfy section 401(a)(9) merely because it fails to distribute an amount otherwise required to be distributed by section 401(a)(9) during the period in which the issue of whether a domestic relations order is a QDRO is being determined pursuant to section 414(p)(7), provided that the period does not extend beyond the 18-month period described in section 414(p)(7)(E). To the extent that a distribution otherwise required under section 401(a)(9) is not made during this period, any segregated amounts, as defined in section 414(p)(7)(A), will be treated as though the amounts are not vested during the period and any distributions with respect to such amounts must be made under the relevant rules for nonvested benefits described in either A–8 of § 1.401(a)(9)–5 or A–6 of § 1.401(a)(9)–6T, as applicable.

Q–8. Will a plan fail to satisfy section 401(a)(9) where an individual's distribution from the plan is less than the amount otherwise required to satisfy section 401(a)(9) because distributions were being paid under an annuity contract issued by a life insurance company in state insurer delinquency proceedings and have been reduced or suspended by reasons of such state proceedings?

A–8. A plan will not fail to satisfy section 401(a)(9) merely because an individual's distribution from the plan is less than the amount otherwise required to satisfy section 401(a)(9) because distributions were being paid under an annuity contract issued by a life insurance company in state insurer delinquency proceedings and have been reduced or suspended by reasons of such state proceedings. To the extent that a distribution otherwise required under section 401(a)(9) is not made during the state insurer delinquency proceedings, this amount and any additional amount accrued during this period will be treated as though such amounts are not vested during the period and any distributions with respect to such amounts must be made under the relevant rules for nonvested benefits described in either A–8 of § 1.401(a)(9)–5 or A–6 of § 1.401(a)(9)–6T, as applicable.

Q–9. Will a plan fail to qualify as a pension plan within the meaning of section 401(a) solely because the plan permits distributions to commence to an employee on or after April 1 of the calendar year following the calendar year in which the employee attains age 70½ even though the employee has not retired or attained the normal retirement age under the plan as of the date on which such distributions commence?

A–9. No, a plan will not fail to qualify as a pension plan within the meaning of section 401(a) solely because the plan permits distributions to commence to an employee on or after April 1 of the calendar year following the calendar year in which the employee attains age 70½ even though the employee has not retired or attained the normal retirement age under the plan as of the date on

which such distributions commence. This rule applies without regard to whether the employee is a 5-percent owner with respect to the plan year ending in the calendar year in which distributions commence.

Q–10. Is the distribution of an annuity contract a distribution for purposes of section 401(a)(9)?

A–10. No, the distribution of an annuity contract is not a distribution for purposes of section 401(a)(9).

Q–11. Will a payment by a plan after the death of an employee fail to be treated as a distribution for purposes of section 401(a)(9) solely because it is made to an estate or a trust?

A–11. A payment by a plan after the death of an employee will not fail to be treated as a distribution for purposes of section 401(a)(9) solely because it is made to an estate or a trust. As a result, the estate or trust which receives a payment from a plan after the death of an employee need not distribute the amount of such payment to the beneficiaries of the estate or trust in accordance with section 401(a)(9)(B). Pursuant to A–3 of § 1.401(a)(9)–4, an estate may not be a designated beneficiary. Thus, pursuant to A–4 of § 1.401(a)(9)–3, distribution to the estate must satisfy the 5-year rule in section 401(a)(9)(B)(iii) if the distribution to the employee had not begun (as defined in A–6 of § 1.401(a)(9)–2) as of the employee's date of death. However, see A–5 and A–6 of § 1.401(a)(9)–4 for provisions under which beneficiaries of a trust with respect to the trust's interest in an employee's benefit are treated as having been designated as beneficiaries of the employee under the plan.

Q–12. Will a plan fail to satisfy section 411(d)(6) if the plan is amended to eliminate the availability of an optional form of benefit to the extent that the optional form does not satisfy section 401(a)(9)?

A–12. No, pursuant to section 411(d)(6)(B), a plan will not fail to satisfy section 411(d)(6) merely because the plan is amended to eliminate the availability of an optional form of benefit to the extent that the optional form does not satisfy section 401(a)(9). (See also A–3 of § 1.401(a)(9)–1, which requires a plan to provide that, notwithstanding any other plan provision, it will not distribute benefits under any option that does not satisfy section 401(a)(9).)

Q–13. Is a plan disqualified merely because it pays benefits under a designation made before January 1, 1984, in accordance with section 242(b)(2) of the Tax Equity and Fiscal Responsibility Act (TEFRA)?

A–13. No, even though the distribution requirements added by TEFRA were retroactively repealed by the Tax Reform Act of 1984 (TRA of 1984), the transitional election rule in section 242(b) of TEFRA was preserved. Satisfaction of the spousal consent requirements of section 417(a) and (e) (added by the Retirement Equity Act of 1984) will not be considered a revocation of the pre-1984 designation. However, sections 401(a)(11) and 417 must be satisfied with respect to any distribution subject to those sections. The election provided in section 242(b) of TEFRA is hereafter referred to as a section 242(b)(2) election.

Q–14. If an amount is transferred from one plan (transferor plan) to another plan (transferee plan), may the transferee plan distribute the amount transferred in accordance with a section 242(b)(2) election made under either the transferor plan or under the transferee plan?

A–14. (a) If an amount is transferred from one plan (transferor plan) to another plan (transferee plan), the amount transferred may be distributed in accordance with a section 242(b)(2) election made under the transferor plan if the employee did not elect to have the amount transferred and if the amount transferred is separately accounted for by the transferee plan. However, only the benefit attributable to the amount transferred, plus earnings thereon, may be distributed in accordance with the section 242(b)(2) election made under the transferor plan. If the employee elected to have the amount transferred, the transfer will be treated as a distribution and rollover of the amount transferred for purposes of this section.

(b) In the case in which an amount is transferred from one plan to another plan, the amount transferred may not be distributed in accordance with a section 242(b)(2) election made under the transferee plan. If a section 242(b)(2) election was made under the transferee plan, the amount transferred must be separately accounted for. If the amount transferred is not separately accounted for under the transferee plan, the section 242(b)(2) election under the transferee plan is revoked and section 401(a)(9) will apply to subsequent distributions by the transferee plan.

(c) A merger, spinoff, or consolidation, as defined in § 1.414(l)–1(b), will be treated as a transfer for purposes of the section 242(b)(2) election.

Q–15. If an amount is distributed by one plan (distributing plan) and rolled over into another plan (receiving plan), may the receiving plan distribute the amount rolled over in accordance with a section 242(b)(2) election made under either the distributing plan or the receiving plan?

A–15. No, if an amount is distributed by one plan (distributing plan) and rolled over into another plan (receiving plan), the receiving plan must distribute the amount rolled over in accordance with section 401(a)(9) whether or not the employee made a section 242(b)(2) election under the distributing plan. Further, if the amount rolled over was not distributed in accordance with the election, the election under the distributing plan is revoked and section 401(a)(9) will apply to all subsequent distributions by the distributing plan. Finally, if the employee made a section 242(b)(2) election under the receiving plan and such election is still in effect, the amount rolled over must be separately accounted for under the receiving plan and distributed in accordance with section 401(a)(9). If amounts rolled over are not separately accounted for, any section 242(b)(2) election under the receiving plan is revoked and section 401(a)(9) will apply to subsequent distributions by the receiving plan.

Q–16. May a section 242(b)(2) election be revoked after the date by which distributions are required to commence in order to satisfy section 401(a)(9) and this section of the regulations?

A–16. Yes, a section 242(b)(2) election may be revoked after the date by which distributions are required to commence in order to satisfy section 401(a)(9) and this section of the regulations. However, if the section 242(b)(2) election is revoked after the date by which distributions are required to commence in order to satisfy section 401(a)(9) and this section of the regulations and the total amount of the distributions which would have been required to be made prior to the date of the revocation in order to satisfy section 401(a)(9), but for the section 242(b)(2) election, have not been made, the plan must distribute by the end of the calendar year following the calendar year in which the revocation occurs the total amount not yet distributed which was required to have been distributed to satisfy the requirements of section 401(a)(9) and continue distributions in accordance with such requirements.

§ 1.401(a)(9)–9 Life expectancy and distribution period tables.

Q–1. What is the life expectancy for an individual for purposes of determining required minimum distributions under section 401(a)(9)?

A–1 The following table, referred to as the Single Life Table, is used for

determining the life expectancy of an individual:

SINGLE LIFE TABLE

Age	Life expectancy
0	82.4
1	81.6
2	80.6
3	79.7
4	78.7
5	77.7
6	76.7
7	75.8
8	74.8
9	73.8
10	72.8
11	71.8
12	70.8
13	69.9
14	68.9
15	67.9
16	66.9
17	66.0
18	65.0
19	64.0
20	63.0
21	62.1
22	61.1
23	60.1
24	59.1
25	58.2
26	57.2
27	56.2
28	55.3
29	54.3
30	53.3
31	52.4
32	51.4
33	50.4
34	49.4
35	48.5
36	47.5
37	46.5
38	45.6
39	44.6
40	43.6
41	42.7
42	41.7
43	40.7
44	39.8
45	38.8
46	37.9
47	37.0
48	36.0
49	35.1
50	34.2
51	33.3
52	32.3
53	31.4
54	30.5
55	29.6
56	28.7
57	27.9
58	27.0
59	26.1
60	25.2
61	24.4
62	23.5

SINGLE LIFE TABLE—Continued

Age	Life expectancy
63	22.7
64	21.8
65	21.0
66	20.2
67	19.4
68	18.6
69	17.8
70	17.0
71	16.3
72	15.5
73	14.8
74	14.1
75	13.4
76	12.7
77	12.1
78	11.4
79	10.8
80	10.2
81	9.7
82	9.1
83	8.6
84	8.1
85	7.6
86	7.1
87	6.7
88	6.3
89	5.9
90	5.5
91	5.2
92	4.9
93	4.6
94	4.3
95	4.1
96	3.8
97	3.6
98	3.4
99	3.1
100	2.9
101	2.7
102	2.5
103	2.3
104	2.1
105	1.9
106	1.7
107	1.5
108	1.4
109	1.2
110	1.1
111+	1.0

Q–2. What is the applicable distribution period for an individual account for purposes of determining required minimum distributions during an employee's lifetime under section 401(a)(9)?

A–2. *Table for determining distribution period.* The following table, referred to as the Uniform Lifetime Table, is used for determining the distribution period for lifetime distributions to an employee in situations in which the employee's spouse is either not the sole designated beneficiary or is the sole designated beneficiary but is not more than 10 years younger than the employee.

UNIFORM LIFETIME TABLE

Age of employee	Distribution period
70	27.4
71	26.5
72	25.6
73	24.7
74	23.8
75	22.9
76	22.0
77	21.2
78	20.3
79	19.5
80	18.7
81	17.9
82	17.1
83	16.3
84	15.5
85	14.8
86	14.1
87	13.4
88	12.7
89	12.0
90	11.4
91	10.8
92	10.2
93	9.6
94	9.1
95	8.6
96	8.1
97	7.6
98	7.1
99	6.7
100	6.3
101	5.9
102	5.5
103	5.2
104	4.9
105	4.5
106	4.2
107	3.9
108	3.7
109	3.4
110	3.1
111	2.9
112	2.6
113	2.4
114	2.1
115+	1.9

Q–3. What is the joint life and last survivor expectancy of an individual and beneficiary for purposes of determining required minimum distributions under section 401(a)(9)?

A–3. The following table, referred to as the Joint and Last Survivor Table, is used for determining the joint and last survivor life expectancy of two individuals:

JOINT AND LAST SURVIVOR TABLE

Ages	0	1	2	3	4	5	6	7	8	9
0	90.0	89.5	89.0	88.6	88.2	87.8	87.4	87.1	86.8	86.5
1	89.5	89.0	88.5	88.1	87.6	87.2	86.8	86.5	86.1	85.8
2	89.0	88.5	88.0	87.5	87.1	86.6	86.2	85.8	85.5	85.1
3	88.6	88.1	87.5	87.0	86.5	86.1	85.6	85.2	84.8	84.5
4	88.2	87.6	87.1	86.5	86.0	85.5	85.1	84.6	84.2	83.8
5	87.8	87.2	86.6	86.1	85.5	85.0	84.5	84.1	83.6	83.2
6	87.4	86.8	86.2	85.6	85.1	84.5	84.0	83.5	83.1	82.6
7	87.1	86.5	85.8	85.2	84.6	84.1	83.5	83.0	82.5	82.1
8	86.8	86.1	85.5	84.8	84.2	83.6	83.1	82.5	82.0	81.6
9	86.5	85.8	85.1	84.5	83.8	83.2	82.6	82.1	81.6	81.0
10	86.2	85.5	84.8	84.1	83.5	82.8	82.2	81.6	81.1	80.6
11	85.9	85.2	84.5	83.8	83.1	82.5	81.8	81.2	80.7	80.1
12	85.7	84.9	84.2	83.5	82.8	82.1	81.5	80.8	80.2	79.7
13	85.4	84.7	84.0	83.2	82.5	81.8	81.1	80.5	79.9	79.2
14	85.2	84.5	83.7	83.0	82.2	81.5	80.8	80.1	79.5	78.9
15	85.0	84.3	83.5	82.7	82.0	81.2	80.5	79.8	79.1	78.5
16	84.9	84.1	83.3	82.5	81.7	81.0	80.2	79.5	78.8	78.1
17	84.7	83.9	83.1	82.3	81.5	80.7	80.0	79.2	78.5	77.8
18	84.5	83.7	82.9	82.1	81.3	80.5	79.7	79.0	78.2	77.5
19	84.4	83.6	82.7	81.9	81.1	80.3	79.5	78.7	78.0	77.3
20	84.3	83.4	82.6	81.8	80.9	80.1	79.3	78.5	77.7	77.0
21	84.1	83.3	82.4	81.6	80.8	79.9	79.1	78.3	77.5	76.8
22	84.0	83.2	82.3	81.5	80.6	79.8	78.9	78.1	77.3	76.5
23	83.9	83.1	82.2	81.3	80.5	79.6	78.8	77.9	77.1	76.3
24	83.8	83.0	82.1	81.2	80.3	79.5	78.6	77.8	76.9	76.1
25	83.7	82.9	82.0	81.1	80.2	79.3	78.5	77.6	76.8	75.9
26	83.6	82.8	81.9	81.0	80.1	79.2	78.3	77.5	76.6	75.8
27	83.6	82.7	81.8	80.9	80.0	79.1	78.2	77.4	76.5	75.6
28	83.5	82.6	81.7	80.8	79.9	79.0	78.1	77.2	76.4	75.5
29	83.4	82.6	81.6	80.7	79.8	78.9	78.0	77.1	76.2	75.4
30	83.4	82.5	81.6	80.7	79.7	78.8	77.9	77.0	76.1	75.2
31	83.3	82.4	81.5	80.6	79.7	78.8	77.8	76.9	76.0	75.1
32	83.3	82.4	81.5	80.5	79.6	78.7	77.8	76.8	75.9	75.0
33	83.2	82.3	81.4	80.5	79.5	78.6	77.7	76.8	75.9	74.9
34	83.2	82.3	81.3	80.4	79.5	78.5	77.6	76.7	75.8	74.9
35	83.1	82.2	81.3	80.4	79.4	78.5	77.6	76.6	75.7	74.8
36	83.1	82.2	81.3	80.3	79.4	78.4	77.5	76.6	75.6	74.7
37	83.0	82.2	81.2	80.3	79.3	78.4	77.4	76.5	75.6	74.6
38	83.0	82.1	81.2	80.2	79.3	78.3	77.4	76.4	75.5	74.6
39	83.0	82.1	81.1	80.2	79.2	78.3	77.3	76.4	75.5	74.5
40	82.9	82.1	81.1	80.2	79.2	78.3	77.3	76.4	75.4	74.5
41	82.9	82.0	81.1	80.1	79.2	78.2	77.3	76.3	75.4	74.4
42	82.9	82.0	81.1	80.1	79.1	78.2	77.2	76.3	75.3	74.4
43	82.9	82.0	81.0	80.1	79.1	78.2	77.2	76.2	75.3	74.3
44	82.8	81.9	81.0	80.0	79.1	78.1	77.2	76.2	75.2	74.3
45	82.8	81.9	81.0	80.0	79.1	78.1	77.1	76.2	75.2	74.3
46	82.8	81.9	81.0	80.0	79.0	78.1	77.1	76.1	75.2	74.2
47	82.8	81.9	80.9	80.0	79.0	78.0	77.1	76.1	75.2	74.2
48	82.8	81.9	80.9	80.0	79.0	78.0	77.1	76.1	75.1	74.2
49	82.7	81.8	80.9	79.9	79.0	78.0	77.0	76.1	75.1	74.1
50	82.7	81.8	80.9	79.9	79.0	78.0	77.0	76.0	75.1	74.1
51	82.7	81.8	80.9	79.9	78.9	78.0	77.0	76.0	75.1	74.1
52	82.7	81.8	80.9	79.9	78.9	78.0	77.0	76.0	75.0	74.1
53	82.7	81.8	80.8	79.9	78.9	77.9	77.0	76.0	75.0	74.0
54	82.7	81.8	80.8	79.9	78.9	77.9	76.9	76.0	75.0	74.0
55	82.6	81.8	80.8	79.8	78.9	77.9	76.9	76.0	75.0	74.0
56	82.6	81.7	80.8	79.8	78.9	77.9	76.9	75.9	75.0	74.0
57	82.6	81.7	80.8	79.8	78.9	77.9	76.9	75.9	75.0	74.0
58	82.6	81.7	80.8	79.8	78.8	77.9	76.9	75.9	74.9	74.0
59	82.6	81.7	80.8	79.8	78.8	77.9	76.9	75.9	74.9	74.0
60	82.6	81.7	80.8	79.8	78.8	77.8	76.9	75.9	74.9	73.9
61	82.6	81.7	80.8	79.8	78.8	77.8	76.9	75.9	74.9	73.9
62	82.6	81.7	80.7	79.8	78.8	77.8	76.9	75.9	74.9	73.9
63	82.6	81.7	80.7	79.8	78.8	77.8	76.8	75.9	74.9	73.9
64	82.5	81.7	80.7	79.8	78.8	77.8	76.8	75.9	74.9	73.9
65	82.5	81.7	80.7	79.8	78.8	77.8	76.8	75.8	74.9	73.9
66	82.5	81.7	80.7	79.7	78.8	77.8	76.8	75.8	74.9	73.9
67	82.5	81.7	80.7	79.7	78.8	77.8	76.8	75.8	74.9	73.9
68	82.5	81.6	80.7	79.7	78.8	77.8	76.8	75.8	74.8	73.9
69	82.5	81.6	80.7	79.7	78.8	77.8	76.8	75.8	74.8	73.9
70	82.5	81.6	80.7	79.7	78.8	77.8	76.8	75.8	74.8	73.9
71	82.5	81.6	80.7	79.7	78.7	77.8	76.8	75.8	74.8	73.8

JOINT AND LAST SURVIVOR TABLE—Continued

Ages	0	1	2	3	4	5	6	7	8	9
72	82.5	81.6	80.7	79.7	78.7	77.8	76.8	75.8	74.8	73.8
73	82.5	81.6	80.7	79.7	78.7	77.8	76.8	75.8	74.8	73.8
74	82.5	81.6	80.7	79.7	78.7	77.8	76.8	75.8	74.8	73.8
75	82.5	81.6	80.7	79.7	78.7	77.8	76.8	75.8	74.8	73.8
76	82.5	81.6	80.7	79.7	78.7	77.8	76.8	75.8	74.8	73.8
77	82.5	81.6	80.7	79.7	78.7	77.7	76.8	75.8	74.8	73.8
78	82.5	81.6	80.7	79.7	78.7	77.7	76.8	75.8	74.8	73.8
79	82.5	81.6	80.7	79.7	78.7	77.7	76.8	75.8	74.8	73.8
80	82.5	81.6	80.7	79.7	78.7	77.7	76.8	75.8	74.8	73.8
81	82.4	81.6	80.7	79.7	78.7	77.7	76.8	75.8	74.8	73.8
82	82.4	81.6	80.7	79.7	78.7	77.7	76.8	75.8	74.8	73.8
83	82.4	81.6	80.7	79.7	78.7	77.7	76.8	75.8	74.8	73.8
84	82.4	81.6	80.7	79.7	78.7	77.7	76.8	75.8	74.8	73.8
85	82.4	81.6	80.6	79.7	78.7	77.7	76.8	75.8	74.8	73.8
86	82.4	81.6	80.6	79.7	78.7	77.7	76.7	75.8	74.8	73.8
87	82.4	81.6	80.6	79.7	78.7	77.7	76.7	75.8	74.8	73.8
88	82.4	81.6	80.6	79.7	78.7	77.7	76.7	75.8	74.8	73.8
89	82.4	81.6	80.6	79.7	78.7	77.7	76.7	75.8	74.8	73.8
90	82.4	81.6	80.6	79.7	78.7	77.7	76.7	75.8	74.8	73.8
91	82.4	81.6	80.6	79.7	78.7	77.7	76.7	75.8	74.8	73.8
92	82.4	81.6	80.6	79.7	78.7	77.7	76.7	75.8	74.8	73.8
93	82.4	81.6	80.6	79.7	78.7	77.7	76.7	75.8	74.8	73.8
94	82.4	81.6	80.6	79.7	78.7	77.7	76.7	75.8	74.8	73.8
95	82.4	81.6	80.6	79.7	78.7	77.7	76.7	75.8	74.8	73.8
96	82.4	81.6	80.6	79.7	78.7	77.7	76.7	75.8	74.8	73.8
97	82.4	81.6	80.6	79.7	78.7	77.7	76.7	75.8	74.8	73.8
98	82.4	81.6	80.6	79.7	78.7	77.7	76.7	75.8	74.8	73.8
99	82.4	81.6	80.6	79.7	78.7	77.7	76.7	75.8	74.8	73.8
100	82.4	81.6	80.6	79.7	78.7	77.7	76.7	75.8	74.8	73.8
101	82.4	81.6	80.6	79.7	78.7	77.7	76.7	75.8	74.8	73.8
102	82.4	81.6	80.6	79.7	78.7	77.7	76.7	75.8	74.8	73.8
103	82.4	81.6	80.6	79.7	78.7	77.7	76.7	75.8	74.8	73.8
104	82.4	81.6	80.6	79.7	78.7	77.7	76.7	75.8	74.8	73.8
105	82.4	81.6	80.6	79.7	78.7	77.7	76.7	75.8	74.8	73.8
106	82.4	81.6	80.6	79.7	78.7	77.7	76.7	75.8	74.8	73.8
107	82.4	81.6	80.6	79.7	78.7	77.7	76.7	75.8	74.8	73.8
108	82.4	81.6	80.6	79.7	78.7	77.7	76.7	75.8	74.8	73.8
109	82.4	81.6	80.6	79.7	78.7	77.7	76.7	75.8	74.8	73.8
110	82.4	81.6	80.6	79.7	78.7	77.7	76.7	75.8	74.8	73.8
111	82.4	81.6	80.6	79.7	78.7	77.7	76.7	75.8	74.8	73.8
112	82.4	81.6	80.6	79.7	78.7	77.7	76.7	75.8	74.8	73.8
113	82.4	81.6	80.6	79.7	78.7	77.7	76.7	75.8	74.8	73.8
114	82.4	81.6	80.6	79.7	78.7	77.7	76.7	75.8	74.8	73.8
115+	82.4	81.6	80.6	79.7	78.7	77.7	76.7	75.8	74.8	73.8

Ages	10	11	12	13	14	15	16	17	18	19
10	80.0	79.6	79.1	78.7	78.2	77.9	77.5	77.2	76.8	76.5
11	79.6	79.0	78.6	78.1	77.7	77.3	76.9	76.5	76.2	75.8
12	79.1	78.6	78.1	77.6	77.1	76.7	76.3	75.9	75.5	75.2
13	78.7	78.1	77.6	77.1	76.6	76.1	75.7	75.3	74.9	74.5
14	78.2	77.7	77.1	76.6	76.1	75.6	75.1	74.7	74.3	73.9
15	77.9	77.3	76.7	76.1	75.6	75.1	74.6	74.1	73.7	73.3
16	77.5	76.9	76.3	75.7	75.1	74.6	74.1	73.6	73.1	72.7
17	77.2	76.5	75.9	75.3	74.7	74.1	73.6	73.1	72.6	72.1
18	76.8	76.2	75.5	74.9	74.3	73.7	73.1	72.6	72.1	71.6
19	76.5	75.8	75.2	74.5	73.9	73.3	72.7	72.1	71.6	71.1
20	76.3	75.5	74.8	74.2	73.5	72.9	72.3	71.7	71.1	70.6
21	76.0	75.3	74.5	73.8	73.2	72.5	71.9	71.3	70.7	70.1
22	75.8	75.0	74.3	73.5	72.9	72.2	71.5	70.9	70.3	69.7
23	75.5	74.8	74.0	73.3	72.6	71.9	71.2	70.5	69.9	69.3
24	75.3	74.5	73.8	73.0	72.3	71.6	70.9	70.2	69.5	68.9
25	75.1	74.3	73.5	72.8	72.0	71.3	70.6	69.9	69.2	68.5
26	75.0	74.1	73.3	72.5	71.8	71.0	70.3	69.6	68.9	68.2
27	74.8	74.0	73.1	72.3	71.6	70.8	70.0	69.3	68.6	67.9
28	74.6	73.8	73.0	72.2	71.3	70.6	69.8	69.0	68.3	67.6
29	74.5	73.6	72.8	72.0	71.2	70.4	69.6	68.8	68.0	67.3
30	74.4	73.5	72.7	71.8	71.0	70.2	69.4	68.6	67.8	67.1
31	74.3	73.4	72.5	71.7	70.8	70.0	69.2	68.4	67.6	66.8
32	74.1	73.3	72.4	71.5	70.7	69.8	69.0	68.2	67.4	66.6
33	74.0	73.2	72.3	71.4	70.5	69.7	68.8	68.0	67.2	66.4

Ages	10	11	12	13	14	15	16	17	18	19
34	73.9	73.0	72.2	71.3	70.4	69.5	68.7	67.8	67.0	66.2
35	73.9	73.0	72.1	71.2	70.3	69.4	68.5	67.7	66.8	66.0
36	73.8	72.9	72.0	71.1	70.2	69.3	68.4	67.6	66.7	65.9
37	73.7	72.8	71.9	71.0	70.1	69.2	68.3	67.4	66.6	65.7
38	73.6	72.7	71.8	70.9	70.0	69.1	68.2	67.3	66.4	65.6
39	73.6	72.7	71.7	70.8	69.9	69.0	68.1	67.2	66.3	65.4
40	73.5	72.6	71.7	70.7	69.8	68.9	68.0	67.1	66.2	65.3
41	73.5	72.5	71.6	70.7	69.7	68.8	67.9	67.0	66.1	65.2
42	73.4	72.5	71.5	70.6	69.7	68.8	67.8	66.9	66.0	65.1
43	73.4	72.4	71.5	70.6	69.6	68.7	67.8	66.8	65.9	65.0
44	73.3	72.4	71.4	70.5	69.6	68.6	67.7	66.8	65.9	64.9
45	73.3	72.3	71.4	70.5	69.5	68.6	67.6	66.7	65.8	64.9
46	73.3	72.3	71.4	70.4	69.5	68.5	67.6	66.6	65.7	64.8
47	73.2	72.3	71.3	70.4	69.4	68.5	67.5	66.6	65.7	64.7
48	73.2	72.2	71.3	70.3	69.4	68.4	67.5	66.5	65.6	64.7
49	73.2	72.2	71.2	70.3	69.3	68.4	67.4	66.5	65.6	64.6
50	73.1	72.2	71.2	70.3	69.3	68.4	67.4	66.5	65.5	64.6
51	73.1	72.2	71.2	70.2	69.3	68.3	67.4	66.4	65.5	64.5
52	73.1	72.1	71.2	70.2	69.2	68.3	67.3	66.4	65.4	64.5
53	73.1	72.1	71.1	70.2	69.2	68.3	67.3	66.3	65.4	64.4
54	73.1	72.1	71.1	70.2	69.2	68.2	67.3	66.3	65.4	64.4
55	73.0	72.1	71.1	70.1	69.2	68.2	67.2	66.3	65.3	64.4
56	73.0	72.1	71.1	70.1	69.1	68.2	67.2	66.3	65.3	64.3
57	73.0	72.0	71.1	70.1	69.1	68.2	67.2	66.2	65.3	64.3
58	73.0	72.0	71.0	70.1	69.1	68.1	67.2	66.2	65.2	64.3
59	73.0	72.0	71.0	70.1	69.1	68.1	67.2	66.2	65.2	64.3
60	73.0	72.0	71.0	70.0	69.1	68.1	67.1	66.2	65.2	64.2
61	73.0	72.0	71.0	70.0	69.1	68.1	67.1	66.2	65.2	64.2
62	72.9	72.0	71.0	70.0	69.0	68.1	67.1	66.1	65.2	64.2
63	72.9	72.0	71.0	70.0	69.0	68.1	67.1	66.1	65.2	64.2
64	72.9	71.9	71.0	70.0	69.0	68.0	67.1	66.1	65.1	64.2
65	72.9	71.9	71.0	70.0	69.0	68.0	67.1	66.1	65.1	64.2
66	72.9	71.9	70.9	70.0	69.0	68.0	67.1	66.1	65.1	64.1
67	72.9	71.9	70.9	70.0	69.0	68.0	67.0	66.1	65.1	64.1
68	72.9	71.9	70.9	70.0	69.0	68.0	67.0	66.1	65.1	64.1
69	72.9	71.9	70.9	69.9	69.0	68.0	67.0	66.1	65.1	64.1
70	72.9	71.9	70.9	69.9	69.0	68.0	67.0	66.0	65.1	64.1
71	72.9	71.9	70.9	69.9	69.0	68.0	67.0	66.0	65.1	64.1
72	72.9	71.9	70.9	69.9	69.0	68.0	67.0	66.0	65.1	64.1
73	72.9	71.9	70.9	69.9	68.9	68.0	67.0	66.0	65.0	64.1
74	72.9	71.9	70.9	69.9	68.9	68.0	67.0	66.0	65.0	64.1
75	72.8	71.9	70.9	69.9	68.9	68.0	67.0	66.0	65.0	64.1
76	72.8	71.9	70.9	69.9	68.9	68.0	67.0	66.0	65.0	64.1
77	72.8	71.9	70.9	69.9	68.9	68.0	67.0	66.0	65.0	64.1
78	72.8	71.9	70.9	69.9	68.9	67.9	67.0	66.0	65.0	64.0
79	72.8	71.9	70.9	69.9	68.9	67.9	67.0	66.0	65.0	64.0
80	72.8	71.9	70.9	69.9	68.9	67.9	67.0	66.0	65.0	64.0
81	72.8	71.8	70.9	69.9	68.9	67.9	67.0	66.0	65.0	64.0
82	72.8	71.8	70.9	69.9	68.9	67.9	67.0	66.0	65.0	64.0
83	72.8	71.8	70.9	69.9	68.9	67.9	67.0	66.0	65.0	64.0
84	72.8	71.8	70.9	69.9	68.9	67.9	67.0	66.0	65.0	64.0
85	72.8	71.8	70.9	69.9	68.9	67.9	66.9	66.0	65.0	64.0
86	72.8	71.8	70.9	69.9	68.9	67.9	66.9	66.0	65.0	64.0
87	72.8	71.8	70.9	69.9	68.9	67.9	66.9	66.0	65.0	64.0
88	72.8	71.8	70.9	69.9	68.9	67.9	66.9	66.0	65.0	64.0
89	72.8	71.8	70.9	69.9	68.9	67.9	66.9	66.0	65.0	64.0
90	72.8	71.8	70.9	69.9	68.9	67.9	66.9	66.0	65.0	64.0
91	72.8	71.8	70.9	69.9	68.9	67.9	66.9	66.0	65.0	64.0
92	72.8	71.8	70.9	69.9	68.9	67.9	66.9	66.0	65.0	64.0
93	72.8	71.8	70.9	69.9	68.9	67.9	66.9	66.0	65.0	64.0
94	72.8	71.8	70.8	69.9	68.9	67.9	66.9	66.0	65.0	64.0
95	72.8	71.8	70.8	69.9	68.9	67.9	66.9	66.0	65.0	64.0
96	72.8	71.8	70.8	69.9	68.9	67.9	66.9	66.0	65.0	64.0
97	72.8	71.8	70.8	69.9	68.9	67.9	66.9	66.0	65.0	64.0
98	72.8	71.8	70.8	69.9	68.9	67.9	66.9	66.0	65.0	64.0
99	72.8	71.8	70.8	69.9	68.9	67.9	66.9	66.0	65.0	64.0
100	72.8	71.8	70.8	69.9	68.9	67.9	66.9	66.0	65.0	64.0
101	72.8	71.8	70.8	69.9	68.9	67.9	66.9	66.0	65.0	64.0
102	72.8	71.8	70.8	69.9	68.9	67.9	66.9	66.0	65.0	64.0
103	72.8	71.8	70.8	69.9	68.9	67.9	66.9	66.0	65.0	64.0
104	72.8	71.8	70.8	69.9	68.9	67.9	66.9	66.0	65.0	64.0
105	72.8	71.8	70.8	69.9	68.9	67.9	66.9	66.0	65.0	64.0
106	72.8	71.8	70.8	69.9	68.9	67.9	66.9	66.0	65.0	64.0
107	72.8	71.8	70.8	69.9	68.9	67.9	66.9	66.0	65.0	64.0

Ages	10	11	12	13	14	15	16	17	18	19
108	72.8	71.8	70.8	69.9	68.9	67.9	66.9	66.0	65.0	64.0
109	72.8	71.8	70.8	69.9	68.9	67.9	66.9	66.0	65.0	64.0
110	72.8	71.8	70.8	69.9	68.9	67.9	66.9	66.0	65.0	64.0
111	72.8	71.8	70.8	69.9	68.9	67.9	66.9	66.0	65.0	64.0
112	72.8	71.8	70.8	69.9	68.9	67.9	66.9	66.0	65.0	64.0
113	72.8	71.8	70.8	69.9	68.9	67.9	66.9	66.0	65.0	64.0
114	72.8	71.8	70.8	69.9	68.9	67.9	66.9	66.0	65.0	64.0
115+	72.8	71.8	70.8	69.9	68.9	67.9	66.9	66.0	65.0	64.0

Ages	20	21	22	23	24	25	26	27	28	29
20	70.1	69.6	69.1	68.7	68.3	67.9	67.5	67.2	66.9	66.6
21	69.6	69.1	68.6	68.2	67.7	67.3	66.9	66.6	66.2	65.9
22	69.1	68.6	68.1	67.6	67.2	66.7	66.3	65.9	65.6	65.2
23	68.7	68.2	67.9	67.1	66.6	66.2	65.7	65.3	64.9	64.6
24	68.3	67.7	67.2	66.6	66.1	65.6	65.2	64.7	64.3	63.9
25	67.9	67.3	66.7	77.2	65.6	65.1	64.6	64.2	63.7	63.3
26	67.5	66.9	66.3	65.7	65.2	64.6	64.1	63.6	63.2	62.8
27	67.2	66.6	65.9	65.3	64.7	64.2	63.6	63.1	62.7	62.2
28	66.9	66.2	65.6	64.9	64.3	63.7	63.2	62.7	62.1	61.7
29	66.6	65.9	65.2	64.6	63.9	63.3	62.8	62.2	61.7	61.2
30	66.3	65.6	64.9	64.2	63.6	62.9	62.3	61.8	61.2	60.7
31	66.1	65.3	64.6	63.9	63.2	62.6	62.0	61.4	60.8	60.2
32	65.8	65.1	64.3	63.6	62.9	62.2	61.6	61.0	60.4	59.8
33	65.6	64.8	64.1	63.3	62.6	61.9	61.3	60.6	60.0	59.4
34	65.4	64.6	63.8	63.1	62.3	61.6	60.9	60.3	59.6	59.0
35	65.2	64.4	63.6	62.8	62.1	61.4	60.6	59.9	59.3	58.6
36	65.0	64.2	63.4	62.6	61.9	61.1	60.4	59.6	69.0	58.3
37	64.9	64.0	63.2	62.4	61.6	60.9	60.1	59.4	58.7	58.0
38	64.7	63.9	63.0	62.2	61.4	60.6	59.9	59.1	58.4	57.7
39	64.6	63.7	62.9	62.1	61.2	60.4	59.6	58.9	58.1	57.4
40	64.4	63.6	62.7	61.9	61.1	60.2	59.4	58.7	57.9	57.1
41	64.3	63.5	62.6	61.7	60.9	60.1	59.3	58.5	57.7	56.9
42	64.2	63.3	62.5	61.6	60.8	59.9	59.1	58.3	57.5	56.7
43	64.1	63.2	62.4	61.5	60.6	59.8	58.9	58.1	57.3	56.5
44	64.0	63.1	62.2	61.4	60.5	59.6	58.8	57.9	57.1	56.3
45	64.0	63.0	62.2	61.3	60.4	59.5	58.6	57.8	56.9	56.1
46	63.9	63.0	62.1	61.2	60.3	59.4	58.5	57.7	56.8	56.0
47	63.8	62.9	62.0	61.1	60.2	59.3	58.4	57.5	56.7	55.8
48	63.7	62.8	61.9	61.0	60.1	59.2	58.3	57.4	56.5	55.7
49	63.7	62.8	61.8	60.9	60.0	59.1	58.2	57.3	56.4	55.6
50	63.6	62.7	61.8	60.8	59.9	59.0	58.1	57.2	56.3	55.4
51	63.6	62.6	61.7	60.8	59.9	58.9	58.0	57.1	56.2	55.3
52	63.5	62.6	61.7	60.7	59.8	58.9	58.0	57.1	56.1	55.2
53	63.5	62.5	61.6	60.7	59.7	58.8	57.9	57.0	56.1	55.2
54	63.5	62.5	61.6	60.6	59.7	58.8	57.8	56.9	56.0	55.1
55	63.4	62.5	61.5	60.6	59.6	58.7	57.8	56.8	55.9	55.0
56	63.4	62.4	61.5	60.5	59.6	58.7	57.7	56.8	55.9	54.9
57	63.4	62.4	61.5	60.5	59.6	58.6	57.7	56.7	55.8	54.9
58	63.3	62.4	61.4	60.5	59.5	58.6	57.6	56.7	55.8	54.8
59	63.3	62.3	61.4	60.4	59.5	58.5	57.6	56.7	55.7	54.8
60	63.3	62.3	61.4	60.4	59.5	58.5	57.6	56.6	55.7	54.7
61	63.3	62.3	61.3	60.4	59.4	58.5	57.5	56.6	55.6	54.7
62	63.2	62.3	61.3	60.4	59.4	58.4	57.5	56.5	55.6	54.7
63	63.2	62.3	62.3	61.3	60.3	59.4	58.4	57.5	56.5	55.6
64	63.2	62.2	61.3	60.3	59.4	58.4	57.4	56.5	55.5	54.6
65	63.2	62.2	61.3	60.3	59.3	58.4	57.4	56.5	55.5	54.6
66	63.2	62.2	61.2	60.3	59.3	58.4	57.4	56.4	55.5	54.5
67	63.2	62.2	61.2	60.3	59.3	58.3	57.4	56.4	55.5	54.5
68	63.1	62.2	61.2	60.2	59.3	58.3	57.4	56.4	55.4	54.5
69	63.1	62.2	61.2	60.2	59.3	58.3	57.3	56.4	55.4	54.5
70	63.1	62.2	61.2	60.2	59.3	58.3	57.3	56.4	55.4	54.4
71	63.1	62.1	61.2	60.2	59.2	58.3	57.3	56.4	55.4	54.4
72	63.1	62.1	61.2	60.2	59.2	58.3	57.3	56.3	55.4	54.4
73	63.1	62.1	61.2	60.2	59.2	58.3	57.3	56.3	55.4	54.4
74	63.1	62.1	61.2	60.2	59.2	58.2	57.3	56.3	55.4	54.4
75	63.1	62.1	61.1	60.2	59.2	58.2	57.3	56.3	55.3	54.4
76	63.1	62.1	61.1	60.2	59.2	58.2	57.3	56.3	55.3	54.4
77	63.1	62.1	61.1	60.2	59.2	58.2	57.3	56.3	55.3	54.4
78	63.1	62.1	61.1	60.2	59.2	58.2	57.3	56.3	55.3	54.4
79	63.1	62.1	61.1	60.2	59.2	58.2	57.2	56.3	55.3	54.3
80	63.1	62.1	61.1	60.1	59.2	58.2	57.2	56.3	55.3	54.3
81	63.1	62.1	61.1	60.1	59.2	58.2	57.2	56.3	55.3	54.3

Ages	20	21	22	23	24	25	26	27	28	29
82	63.1	62.1	61.1	60.1	59.2	58.2	57.2	56.3	55.3	54.3
83	63.1	62.1	61.1	60.1	59.2	58.2	57.2	56.3	55.3	54.3
84	63.0	62.1	61.1	60.1	59.2	58.2	57.2	56.3	55.3	54.3
85	63.0	62.1	61.1	60.1	59.2	58.2	57.2	56.3	55.3	54.3
86	63.0	62.1	61.1	60.1	59.2	58.2	57.2	56.2	55.3	54.3
87	63.0	62.1	61.1	60.1	59.2	58.2	57.2	56.2	55.3	54.3
88	63.0	62.1	61.1	60.1	59.2	58.2	57.2	56.2	55.3	54.3
89	63.0	62.1	61.1	60.1	59.1	58.2	57.2	56.2	55.3	54.3
90	63.0	62.1	61.1	60.1	59.1	58.2	57.2	56.2	55.3	54.3
91	63.0	62.1	61.1	60.1	59.1	58.2	57.2	56.2	55.3	54.3
92	63.0	62.1	61.1	60.1	59.1	58.2	57.2	56.2	55.3	54.3
93	63.0	62.1	61.1	60.1	59.1	58.2	57.2	56.2	55.3	54.3
94	63.0	62.1	61.1	60.1	59.1	58.2	57.2	56.2	55.3	54.3
95	63.0	62.1	61.1	60.1	59.1	58.2	57.2	56.2	55.3	54.3
96	63.0	62.1	61.1	60.1	59.1	58.2	57.2	56.2	55.3	54.3
97	60.3	62.1	61.1	60.1	59.1	58.2	57.2	56.2	55.3	54.3
98	63.0	62.1	61.1	60.1	59.1	58.2	57.2	56.2	55.3	54.3
99	63.0	62.1	61.1	60.1	59.1	58.2	57.2	56.2	55.3	54.3
100	63.0	62.1	61.1	60.1	59.1	58.2	57.2	56.2	55.3	54.3
101	63.0	62.1	61.1	60.1	59.1	58.2	57.2	56.2	55.3	54.3
102	63.0	62.1	61.1	60.1	59.1	58.2	57.2	56.2	55.3	54.3
103	63.0	62.1	61.1	60.1	59.1	58.2	57.2	56.2	55.3	54.3
104	63.0	62.1	61.1	60.1	59.1	58.2	57.2	56.2	55.3	54.3
105	63.0	62.1	61.1	60.1	59.1	58.2	57.2	56.2	55.3	54.3
106	63.0	62.1	61.1	60.1	59.1	58.2	57.2	56.2	55.3	54.3
107	63.0	62.1	61.1	60.1	59.1	58.2	57.2	56.2	55.3	54.3
108	63.0	62.1	61.1	60.1	59.1	58.2	57.2	56.2	55.3	54.3
109	63.0	62.1	61.1	60.1	59.1	58.2	57.2	56.2	55.3	54.3
110	63.0	62.1	61.1	60.1	59.1	58.2	57.2	56.2	55.3	54.3
111	63.0	62.1	61.1	60.1	59.1	58.2	57.2	56.2	55.3	54.3
112	63.0	62.1	61.1	60.1	59.1	58.2	57.2	56.2	55.3	54.3
113	63.0	62.1	61.1	60.1	59.1	58.2	57.2	56.2	55.3	54.3
114	63.0	62.1	61.1	60.1	59.1	58.2	57.2	56.2	55.3	54.3
115+	63.0	62.1	61.1	60.1	59.1	58.2	57.2	56.2	55.3	54.3

AGES	30	31	32	33	34	35	36	37	38	39
30	60.2	59.7	59.2	58.8	58.4	58.0	57.6	57.3	57.0	56.7
31	59.7	59.2	58.7	58.2	57.8	57.4	57.0	56.6	56.3	56.0
32	59.2	58.7	58.2	57.7	57.2	56.8	56.4	56.0	55.6	55.3
33	58.8	58.2	57.7	57.2	56.7	56.2	55.8	55.4	55.0	54.7
34	58.4	57.8	57.2	56.7	56.2	55.7	55.3	54.8	54.4	54.0
35	58.0	57.4	56.8	56.2	55.7	55.2	54.7	54.3	53.8	53.4
36	57.6	57.0	56.4	55.8	55.3	54.7	54.2	53.7	53.3	52.8
37	57.3	56.6	56.0	55.4	54.8	54.3	53.7	53.2	52.7	52.3
38	57.0	56.3	55.6	55.0	54.4	53.8	53.3	52.7	52.2	51.7
39	56.7	56.0	55.3	54.7	54.0	53.4	52.8	52.3	51.7	51.2
40	56.4	55.7	55.0	54.3	53.7	53.0	52.4	51.8	51.3	50.8
41	56.1	55.4	54.7	54.0	53.3	52.7	52.0	51.4	50.9	50.3
42	55.9	55.2	54.4	53.7	53.0	52.3	51.7	51.1	50.4	49.9
43	55.7	54.9	54.2	53.4	52.7	52.0	51.3	50.7	50.1	49.5
44	55.5	54.7	53.9	53.2	52.4	51.7	51.0	50.4	49.7	49.1
45	55.3	54.5	53.7	52.9	52.2	51.5	50.7	50.0	49.4	48.7
46	55.1	54.3	53.5	52.7	52.0	51.2	50.5	49.8	49.1	48.4
47	55.0	54.1	53.3	52.5	51.7	51.0	50.2	49.5	48.8	48.1
48	54.8	54.0	53.2	52.3	51.5	50.8	50.0	49.2	48.5	47.8
49	54.7	53.8	53.0	52.2	51.4	50.6	49.8	49.0	48.2	47.5
50	54.6	53.7	52.9	52.0	51.2	50.4	49.6	48.8	48.0	47.3
51	54.5	53.6	52.7	51.9	51.0	50.2	49.4	48.6	47.8	47.0
52	54.4	53.5	52.6	51.7	50.9	50.0	49.2	48.4	47.6	46.8
53	54.3	53.4	52.5	51.6	50.8	49.9	49.1	48.2	47.4	46.6
54	54.2	53.3	52.4	51.5	50.6	49.8	48.9	48.1	47.2	46.4
55	54.1	53.2	52.3	51.4	50.5	49.7	48.8	47.9	47.1	46.3
56	54.0	53.1	52.2	51.3	50.4	49.5	48.7	47.8	47.0	46.1
57	54.0	53.0	52.1	51.2	50.3	49.4	48.6	47.7	46.8	46.0
58	53.9	53.0	52.1	51.2	50.3	49.4	48.5	47.6	46.7	45.8
59	53.8	52.9	52.0	51.1	50.2	49.3	48.4	47.5	46.6	45.7
60	53.8	52.9	51.9	51.0	50.1	49.2	48.3	47.4	46.5	45.6
61	53.8	52.8	51.9	51.0	50.0	49.1	48.2	47.3	46.4	45.5
62	53.7	52.8	51.8	50.9	50.0	49.1	48.1	47.2	46.3	45.4
63	53.7	52.7	51.8	50.9	49.9	49.0	48.1	47.2	46.3	45.3
64	53.6	52.7	51.8	50.8	49.9	48.9	48.0	47.1	46.2	45.3
65	53.6	52.7	51.7	50.8	49.8	48.9	48.0	47.0	46.1	45.2

Ages	30	31	32	33	34	35	36	37	38	39
66	53.6	52.6	51.7	50.7	49.8	48.9	47.9	47.0	46.1	45.1
67	53.6	52.6	51.7	50.7	49.8	48.8	47.9	46.9	46.0	45.1
68	53.5	52.6	51.6	50.7	49.7	48.8	47.8	46.9	46.0	45.0
69	53.5	52.6	51.6	50.6	49.7	48.7	47.8	46.9	45.9	45.0
70	53.5	52.5	51.6	50.6	49.7	48.7	47.8	46.8	45.9	44.9
71	53.5	52.5	51.6	50.6	49.6	48.7	47.7	46.8	45.9	44.9
72	53.5	52.5	51.5	50.6	49.6	48.7	47.7	46.8	45.8	44.9
73	53.4	52.5	51.5	50.6	49.6	48.6	47.7	46.7	45.8	44.8
74	53.4	52.5	51.5	50.5	49.6	48.6	47.7	46.7	45.8	44.8
75	53.4	52.5	51.5	50.5	49.6	48.6	47.7	46.7	45.7	44.8
76	53.4	52.4	51.5	50.5	49.6	48.6	47.6	46.7	45.7	44.8
77	53.4	52.4	51.5	50.5	49.5	48.6	47.6	46.7	45.7	44.8
78	53.4	52.4	51.5	50.5	49.5	48.6	47.6	46.6	45.7	44.7
79	53.4	52.4	51.5	50.5	49.5	48.6	47.6	46.6	45.7	44.7
80	53.4	52.4	51.4	50.5	49.5	48.5	47.6	46.6	45.7	44.7
81	53.4	52.4	51.4	50.5	49.5	48.5	47.6	46.6	45.7	44.7
82	53.4	52.4	51.4	50.5	49.5	48.5	47.6	46.6	45.6	44.7
83	53.4	52.4	51.4	50.5	49.5	48.5	47.6	46.6	45.6	44.7
84	53.4	52.4	51.4	50.5	49.5	48.5	47.6	46.6	45.6	44.7
85	53.3	52.4	51.4	50.4	49.5	48.5	47.5	46.6	45.6	44.7
86	53.3	52.4	51.4	50.4	49.5	48.5	47.5	46.6	45.6	44.6
87	53.3	52.4	51.4	50.4	49.5	48.5	47.5	46.6	45.6	44.6
88	53.3	52.4	51.4	50.4	49.5	48.5	47.5	46.6	45.6	44.6
89	53.3	52.4	51.4	50.4	49.5	48.5	47.5	46.6	45.6	44.6
90	53.3	52.4	51.4	50.4	49.5	48.5	47.5	46.6	45.6	44.6
91	53.3	52.4	51.4	50.4	49.5	48.5	47.5	46.6	45.6	44.6
92	53.3	52.4	51.4	50.4	49.5	48.5	47.5	46.6	45.6	44.6
93	53.3	52.4	51.4	50.4	49.5	48.5	47.5	46.6	45.6	44.6
94	53.3	52.4	51.4	50.4	49.5	48.5	47.5	46.6	45.6	44.6
95	53.3	52.4	51.4	50.4	49.5	48.5	47.5	46.5	45.6	44.6
96	53.3	52.4	51.4	50.4	49.5	48.5	47.5	46.5	45.6	44.6
97	53.3	52.4	51.4	50.4	49.5	48.5	47.5	46.5	45.6	44.6
98	53.3	52.4	51.4	50.4	49.5	48.5	47.5	46.5	45.6	44.6
99	53.3	52.4	51.4	50.4	49.5	48.5	47.5	46.5	45.6	44.6
100	53.3	52.4	51.4	50.4	49.5	48.5	47.5	46.5	45.6	44.6
101	53.3	52.4	51.4	50.4	49.5	48.5	47.5	46.5	45.6	44.6
102	53.3	52.4	51.4	50.4	49.5	48.5	47.5	46.5	45.6	44.6
103	53.3	52.4	51.4	50.4	49.5	48.5	47.5	46.5	45.6	44.6
104	53.3	52.4	51.4	50.4	49.5	48.5	47.5	46.5	45.6	44.6
105	53.3	52.4	51.4	50.4	49.4	48.5	47.5	46.5	45.6	44.6
106	53.3	52.4	51.4	50.4	49.4	48.5	47.5	46.5	45.6	44.6
107	53.3	52.4	51.4	50.4	49.4	48.5	47.5	46.5	45.6	44.6
108	53.3	52.4	51.4	50.4	49.4	48.5	47.5	46.5	45.6	44.6
109	53.3	52.4	51.4	50.4	49.4	48.5	47.5	46.5	45.6	44.6
110	53.3	52.4	51.4	50.4	49.4	48.5	47.5	46.5	45.6	44.6
111	53.3	52.4	51.4	50.4	49.4	48.5	47.5	46.5	45.6	44.6
112	53.3	52.4	51.4	50.4	49.4	48.5	47.5	46.5	45.6	44.6
113	53.3	52.4	51.4	50.4	49.4	48.5	47.5	46.5	45.6	44.6
114	53.3	52.4	51.4	50.4	49.4	48.5	47.5	46.5	45.6	44.6
115+	53.3	52.4	51.4	50.4	49.4	48.5	47.5	46.5	45.6	44.6

Ages	40	41	42	43	44	45	46	47	48	49
40	50.2	49.8	49.3	48.9	48.5	48.1	47.7	47.4	47.1	46.8
41	49.8	49.3	48.8	48.3	47.9	47.5	47.1	46.7	46.4	46.1
42	49.3	48.8	48.3	47.8	47.3	46.9	46.5	46.1	45.8	45.4
43	48.9	48.3	47.8	47.3	46.8	46.3	45.9	45.5	45.1	44.8
44	48.5	47.9	47.3	46.8	46.3	45.8	45.4	44.9	44.5	44.2
45	48.1	47.5	46.9	46.3	45.8	45.3	44.8	44.4	44.0	43.6
46	47.7	47.1	46.5	45.9	45.4	44.8	44.3	43.9	43.4	43.0
47	47.4	46.7	46.1	45.5	44.9	44.4	43.9	43.4	42.9	42.4
48	47.1	46.4	45.8	45.1	44.5	44.0	43.4	42.9	42.4	41.9
49	46.8	46.1	45.4	44.8	44.2	43.6	43.0	42.4	41.9	41.4
50	46.5	45.8	45.1	44.4	43.8	43.2	42.6	42.0	41.5	40.9
51	46.3	45.5	44.8	44.1	43.5	42.8	42.2	41.6	41.0	40.5
52	46.0	45.3	44.6	43.8	43.2	42.5	41.8	41.2	40.6	40.1
53	45.8	45.1	44.3	43.6	42.9	42.2	41.5	40.9	40.3	39.7
54	45.6	44.8	44.1	43.3	42.6	41.9	41.2	40.5	39.9	39.3
55	45.5	44.7	43.9	43.1	42.4	41.6	40.9	40.2	39.6	38.9
56	45.3	44.5	43.7	42.9	42.1	41.4	40.7	40.0	39.3	38.6
57	45.1	44.3	43.5	42.7	41.9	41.2	40.4	39.7	39.0	38.3
58	45.0	44.2	43.3	42.5	41.7	40.9	40.2	39.4	38.7	38.0
59	44.9	44.0	43.2	42.4	41.5	40.7	40.0	39.2	38.5	37.8

Ages	40	41	42	43	44	45	46	47	48	49
60	44.7	43.9	43.0	42.2	41.4	40.6	39.8	39.0	38.2	37.5
61	44.6	43.8	42.9	42.1	41.2	40.4	39.6	38.8	38.0	37.3
62	44.5	43.7	42.8	41.9	41.1	40.3	39.4	38.6	37.8	37.1
63	44.5	43.6	42.7	41.8	41.0	40.1	39.3	38.5	37.7	36.9
64	44.4	43.5	42.6	41.7	40.8	40.0	39.2	38.3	37.5	36.7
65	44.3	43.4	42.5	41.6	40.7	39.9	39.0	38.2	37.4	36.6
66	44.2	43.3	42.4	41.5	40.6	39.8	38.9	38.1	37.2	36.4
67	44.2	43.3	42.3	41.4	40.6	39.7	38.8	38.0	37.1	36.3
68	44.1	43.2	42.3	41.4	40.5	39.6	38.7	37.9	37.0	36.2
69	44.1	43.1	42.2	41.3	40.4	39.5	38.6	37.8	36.9	36.0
70	44.0	43.1	42.2	41.3	40.3	39.4	38.6	37.7	36.8	35.9
71	44.0	43.0	42.1	41.2	40.3	39.4	38.5	37.6	36.7	35.9
72	43.9	43.0	42.1	41.1	40.2	39.3	38.4	37.5	36.6	35.8
73	43.9	43.0	42.0	41.1	40.2	39.3	38.4	37.5	36.6	35.7
74	43.9	42.9	42.0	41.1	40.1	39.2	38.3	37.4	36.5	35.6
75	43.8	42.9	42.0	41.0	40.1	39.2	38.3	37.4	36.5	35.6
76	43.8	42.9	41.9	41.0	40.1	39.1	38.2	37.3	36.4	35.5
77	43.8	42.9	41.9	41.0	40.0	39.1	38.2	37.3	36.4	35.5
78	43.8	42.8	41.9	40.9	40.0	39.1	38.2	37.2	36.3	35.4
79	43.8	42.8	41.9	40.9	40.0	39.1	38.1	37.2	36.3	35.4
80	43.7	42.8	41.8	40.9	40.0	39.0	38.1	37.2	36.3	35.4
81	43.7	42.8	41.8	40.9	39.9	39.0	38.1	37.2	36.2	35.3
82	43.7	42.8	41.8	40.9	39.9	39.0	38.1	37.1	36.2	35.3
83	43.7	42.8	41.8	40.9	39.9	39.0	38.0	37.1	36.2	35.3
84	43.7	42.7	41.8	40.8	39.9	39.0	38.0	37.1	36.2	35.3
85	43.7	42.7	41.8	40.8	39.9	38.9	38.0	37.1	36.2	35.2
86	43.7	42.7	41.8	40.8	39.9	38.9	38.0	37.1	36.1	35.2
87	43.7	42.7	41.8	40.8	39.9	38.9	38.0	37.0	36.1	35.2
88	43.7	42.7	41.8	40.8	39.9	38.9	38.0	37.0	36.1	35.2
89	43.7	42.7	41.7	40.8	39.8	38.9	38.0	37.0	36.1	35.2
90	43.7	42.7	41.7	40.8	39.8	38.9	38.0	37.0	36.1	35.2
91	43.7	42.7	41.7	40.8	39.8	38.9	37.9	37.0	36.1	35.2
92	43.7	42.7	41.7	40.8	39.8	38.9	37.9	37.0	36.1	35.1
93	43.7	42.7	41.7	40.8	39.8	38.9	37.9	37.0	36.1	35.1
94	43.7	42.7	41.7	40.8	39.8	38.9	37.9	37.0	36.1	35.1
95	43.6	42.7	41.7	40.8	39.8	38.9	37.9	37.0	36.1	35.1
96	43.6	42.7	41.7	40.8	39.8	38.9	37.9	37.0	36.1	35.1
97	43.6	42.7	41.7	40.8	39.8	38.9	37.9	37.0	36.1	35.1
98	43.6	42.7	41.7	40.8	39.8	38.9	37.9	37.0	36.0	35.1
99	43.6	42.7	41.7	40.8	39.8	38.9	37.9	37.0	36.0	35.1
100	43.6	42.7	41.7	40.8	39.8	38.9	37.9	37.0	36.0	35.1
101	43.6	42.7	41.7	40.8	39.8	38.9	37.9	37.0	36.0	35.1
102	43.6	42.7	41.7	40.8	39.8	38.9	37.9	37.0	36.0	35.1
103	43.6	42.7	41.7	40.8	39.8	38.9	37.9	37.0	36.0	35.1
104	43.6	42.7	41.7	40.8	39.8	38.8	37.9	37.0	36.0	35.1
105	43.6	42.7	41.7	40.8	39.8	38.8	37.9	37.0	36.0	35.1
106	43.6	42.7	41.7	40.8	39.8	38.8	37.9	37.0	36.0	35.1
107	43.6	42.7	41.7	40.8	39.8	38.8	37.9	37.0	36.0	35.1
108	43.6	42.7	41.7	40.8	39.8	38.8	37.9	37.0	36.0	35.1
109	43.6	42.7	41.7	40.7	39.8	38.8	37.9	37.0	36.0	35.1
110	43.6	42.7	41.7	40.7	39.8	38.8	37.9	37.0	36.0	35.1
111	43.6	42.7	41.7	40.7	39.8	38.8	37.9	37.0	36.0	35.1
112	43.6	42.7	41.7	40.7	39.8	38.8	37.9	37.0	36.0	35.1
113	43.6	42.7	41.7	40.7	39.8	38.8	37.9	37.0	36.0	35.1
114	43.6	42.7	41.7	40.7	39.8	38.8	37.9	37.0	36.0	35.1
115+	43.6	42.7	41.7	40.7	39.8	38.8	37.9	37.0	36.0	35.1

Ages	50	51	52	53	54	55	56	57	58	59
50	40.4	40.0	39.5	39.1	38.7	38.3	38.0	37.6	37.3	37.1
51	40.0	39.5	39.0	38.5	38.1	37.7	37.4	37.0	36.7	36.4
52	39.5	39.0	38.5	38.0	37.6	37.2	36.8	36.4	36.0	35.7
53	39.1	38.5	38.0	37.5	37.1	36.6	36.2	35.8	35.4	35.1
54	38.7	38.1	37.6	37.1	36.6	36.1	35.7	35.2	34.8	34.5
55	38.3	37.7	37.2	36.6	36.1	35.6	35.1	34.7	34.3	33.9
56	38.0	37.4	36.8	36.2	35.7	35.1	34.7	34.2	33.7	33.3
57	37.6	37.0	36.4	35.8	35.2	34.7	34.2	33.7	33.2	32.8
58	37.3	36.7	36.0	35.4	34.8	34.3	33.7	33.2	32.8	32.3
59	37.1	36.4	35.7	35.1	34.5	33.9	33.3	32.8	32.3	31.8
60	36.8	36.1	35.4	34.8	34.1	33.5	32.9	32.4	31.9	31.3
61	36.6	35.8	35.1	34.5	33.8	33.2	32.6	32.0	31.4	30.9
62	36.3	35.6	34.9	34.2	33.5	32.9	32.2	31.6	31.1	30.5
63	36.1	35.4	34.6	33.9	33.2	32.6	31.9	31.3	30.7	30.1

Ages	50	51	52	53	54	55	56	57	58	59
64	35.9	35.2	34.4	33.7	33.0	32.3	31.6	31.0	30.4	29.8
65	35.8	35.0	34.2	33.5	32.7	32.0	31.4	30.7	30.0	29.4
66	35.6	34.8	34.0	33.3	32.5	31.8	31.1	30.4	29.8	29.1
67	35.5	34.7	33.9	33.1	32.3	31.6	30.9	30.2	29.5	28.8
68	35.3	34.5	33.7	32.9	32.1	31.4	30.7	29.9	29.2	28.6
69	35.2	34.4	33.6	32.8	32.0	31.2	30.5	29.7	29.0	28.3
70	35.1	34.3	33.4	32.6	31.8	31.1	30.3	29.5	28.8	28.1
71	35.0	34.2	33.3	32.5	31.7	30.9	30.1	29.4	28.6	27.9
72	34.9	34.1	33.2	32.4	31.6	30.8	30.0	29.2	28.4	27.7
73	34.8	34.0	33.1	32.3	31.5	30.6	29.8	29.1	28.3	27.5
74	34.8	33.9	33.0	32.2	31.4	30.5	29.7	28.9	28.1	27.4
75	34.7	33.8	33.0	32.1	31.3	30.4	29.6	28.8	28.0	27.2
76	34.6	33.8	32.9	32.0	31.2	30.3	29.5	28.7	27.9	27.1
77	34.6	33.7	32.8	32.0	31.1	30.3	29.4	28.6	27.8	27.0
78	34.5	33.6	32.8	31.9	31.0	30.2	29.3	28.5	27.7	26.9
79	34.5	33.6	32.7	31.8	31.0	30.1	29.3	28.4	27.6	26.8
80	34.5	33.6	32.7	31.8	30.9	30.1	29.2	28.4	27.5	26.7
81	34.4	33.5	32.6	31.8	30.9	30.0	29.2	28.3	27.5	26.6
82	34.4	33.5	32.6	31.7	30.8	30.0	29.1	28.3	27.4	26.6
83	34.4	33.5	32.6	31.7	30.8	29.9	29.1	28.2	27.4	26.5
84	34.3	33.4	32.5	31.7	30.8	29.9	29.0	28.2	27.3	26.5
85	34.3	33.4	32.5	31.6	30.7	29.9	29.0	28.1	27.3	26.4
86	34.3	33.4	32.5	31.6	30.7	29.8	29.0	28.1	27.2	26.4
87	34.3	33.4	32.5	31.6	30.7	29.8	28.9	28.1	27.2	26.4
88	34.3	33.4	32.5	31.6	30.7	29.8	28.9	28.0	27.2	26.3
89	34.3	33.3	32.4	31.5	30.7	29.8	28.9	28.0	27.2	26.3
90	34.2	33.3	32.4	31.5	30.6	29.8	28.9	28.0	27.1	26.3
91	34.2	33.3	32.4	31.5	30.6	29.7	28.9	28.0	27.1	26.3
92	34.2	33.3	32.4	31.5	30.6	29.7	28.8	28.0	27.1	26.2
93	34.2	33.3	32.4	31.5	30.6	29.7	28.8	28.0	27.1	26.2
94	34.2	33.3	32.4	31.5	30.6	29.7	28.8	27.9	27.1	26.2
95	34.2	33.3	32.4	31.5	30.6	29.7	28.8	27.9	27.1	26.2
96	34.2	33.3	32.4	31.5	30.6	29.7	28.8	27.9	27.0	26.2
97	34.2	33.3	32.4	31.5	30.6	29.7	28.8	27.9	27.0	26.2
98	34.2	33.3	32.4	31.5	30.6	29.7	28.8	27.9	27.0	26.2
99	34.2	33.3	32.4	31.5	30.6	29.7	28.8	27.9	27.0	26.2
100	34.2	33.3	32.4	31.5	30.6	29.7	28.8	27.9	27.0	26.1
101	34.2	33.3	32.4	31.5	30.6	29.7	28.8	27.9	27.0	26.1
102	34.2	33.3	32.4	31.4	30.5	29.7	28.8	27.9	27.0	26.1
103	34.2	33.3	32.4	31.4	30.5	29.7	28.8	27.9	27.0	26.1
104	34.2	33.3	32.4	31.4	30.5	29.6	28.8	27.9	27.0	26.1
105	34.2	33.3	32.3	31.4	30.5	29.6	28.8	27.9	27.0	26.1
106	34.2	33.3	32.3	31.4	30.5	29.6	28.8	27.9	27.0	26.1
107	34.2	33.3	32.3	31.4	30.5	29.6	28.8	27.9	27.0	26.1
108	34.2	33.3	32.3	31.4	30.5	29.6	28.8	27.9	27.0	26.1
109	34.2	33.3	32.3	31.4	30.5	29.6	28.7	27.9	27.0	26.1
110	34.2	33.3	32.3	31.4	30.5	29.6	28.7	27.9	27.0	26.1
111	34.2	33.3	32.3	31.4	30.5	29.6	28.7	27.9	27.0	26.1
112	34.2	33.3	32.3	31.4	30.5	29.6	28.7	27.9	27.0	26.1
113	34.2	33.3	32.3	31.4	30.5	29.6	28.7	27.9	27.0	26.1
114	34.2	33.3	32.3	31.4	30.5	29.6	28.7	27.9	27.0	26.1
115+	34.2	33.3	32.3	31.4	30.5	29.6	28.7	27.9	27.0	26.1

Ages	60	61	62	63	64	65	66	67	68	69
60	30.9	30.4	30.0	29.6	29.2	28.8	28.5	28.2	27.9	27.6
61	30.4	29.9	29.5	29.0	28.6	28.3	27.9	27.6	27.3	27.0
62	30.0	29.5	29.0	28.5	28.1	27.7	27.3	27.0	26.7	26.4
63	29.6	29.0	28.5	28.1	27.6	27.2	26.8	26.4	26.1	25.7
64	29.2	28.6	28.1	27.6	27.1	26.7	26.3	25.9	25.5	25.2
65	28.8	28.3	27.7	27.2	26.7	26.2	25.8	25.4	25.0	24.6
66	28.5	27.9	27.3	26.8	26.3	25.8	25.3	24.9	24.5	24.1
67	28.2	27.6	27.0	26.4	25.9	25.4	24.9	24.4	24.0	23.6
68	27.9	27.3	26.7	26.1	25.5	25.0	24.5	24.0	23.5	23.1
69	27.6	27.0	26.4	25.7	25.2	24.6	24.1	23.6	23.1	22.6
70	27.4	26.7	26.1	25.4	24.8	24.3	23.7	23.2	22.7	22.2
71	27.2	26.5	25.8	25.2	24.5	23.9	23.4	22.8	22.3	21.8
72	27.0	26.3	25.6	24.9	24.3	23.7	23.1	22.5	22.0	21.4
73	26.8	26.1	25.4	24.7	24.0	23.4	22.8	22.2	21.6	21.1
74	26.6	25.9	25.2	24.5	23.8	23.1	22.5	21.9	21.3	20.8
75	26.5	25.7	25.0	24.3	23.6	22.9	22.3	21.6	21.0	20.5
76	26.3	25.6	24.8	24.1	23.4	22.7	22.0	21.4	20.8	20.2
77	26.2	25.4	24.7	23.9	23.2	22.5	21.8	21.2	20.6	19.9

Ages	60	61	62	63	64	65	66	67	68	69
78	26.1	25.3	24.6	23.8	23.1	22.4	21.7	21.0	20.3	19.7
79	26.0	25.2	24.4	23.7	22.9	22.2	21.5	20.8	20.1	19.5
80	25.9	25.1	24.3	23.6	22.8	22.1	21.3	20.6	20.0	19.3
81	25.8	25.0	24.2	23.4	22.7	21.9	21.2	20.5	19.8	19.1
82	25.8	24.9	24.1	23.4	22.6	21.8	21.1	20.4	19.7	19.0
83	25.7	24.9	24.1	23.3	22.5	21.7	21.0	20.2	19.5	18.8
84	25.6	24.8	24.0	23.2	22.4	21.6	20.9	20.1	19.4	18.7
85	25.6	24.8	23.9	23.1	22.3	21.6	20.8	20.1	19.3	18.6
86	25.5	24.7	23.9	23.1	22.3	21.5	20.7	20.0	19.2	18.5
87	25.5	24.7	23.8	23.0	22.2	21.4	20.7	19.9	19.2	18.4
88	25.5	24.6	23.8	23.0	22.2	21.4	20.6	19.8	19.1	18.3
89	25.4	24.6	23.8	22.9	22.1	21.3	20.5	19.8	19.0	18.3
90	25.4	24.6	23.7	22.9	22.1	21.3	20.5	19.7	19.0	18.2
91	25.4	24.5	23.7	22.9	22.1	21.3	20.5	19.7	18.9	18.2
92	25.4	24.5	23.7	22.9	22.0	21.2	20.4	19.6	18.9	18.1
93	25.4	24.5	23.7	22.8	22.0	21.2	20.4	19.6	18.8	18.1
94	25.3	24.5	23.6	22.8	22.0	21.2	20.4	19.6	18.8	18.0
95	25.3	24.5	23.6	22.8	22.0	21.1	20.3	19.6	18.8	18.0
96	25.3	24.5	23.6	22.8	21.9	21.1	20.3	19.5	18.8	18.0
97	25.3	24.5	23.6	22.8	21.9	21.1	20.3	19.5	18.7	18.0
98	25.3	24.4	23.6	22.8	21.9	21.1	20.3	19.5	18.7	17.9
99	25.3	24.4	23.6	22.7	21.9	21.1	20.3	19.5	18.7	17.9
100	25.3	24.4	23.6	22.7	21.9	21.1	20.3	19.5	18.7	17.9
101	25.3	24.4	23.6	22.7	21.9	21.1	20.2	19.4	18.7	17.9
102	25.3	24.4	23.6	22.7	21.9	21.1	20.2	19.4	18.6	17.9
103	25.3	24.4	23.6	22.7	21.9	21.0	20.2	19.4	18.6	17.9
104	25.3	24.4	23.5	22.7	21.9	21.0	20.2	19.4	18.6	17.8
105	25.3	24.4	23.5	22.7	21.9	21.0	20.2	19.4	18.6	17.8
106	25.3	24.4	23.5	22.7	21.9	21.0	20.2	19.4	18.6	17.8
107	25.2	24.4	23.5	22.7	21.8	21.0	20.2	19.4	18.6	17.8
108	25.2	24.4	23.5	22.7	21.8	21.0	20.2	19.4	18.6	17.8
109	25.2	24.4	23.5	22.7	21.8	21.0	20.2	19.4	18.6	17.8
110	25.2	24.4	23.5	22.7	21.8	21.0	20.2	19.4	18.6	17.8
111	25.2	24.4	23.5	22.7	21.8	21.0	20.2	19.4	18.6	17.8
112	25.2	24.4	23.5	22.7	21.8	21.0	20.2	19.4	18.6	17.8
113	25.2	24.4	23.5	22.7	21.8	21.0	20.2	19.4	18.6	17.8
114	25.2	24.4	23.5	22.7	21.8	21.0	20.2	19.4	18.6	17.8
115+	25.2	24.4	23.5	22.7	21.8	21.0	20.2	19.4	18.6	17.8

Ages	70	71	72	73	74	75	76	77	78	79
70	21.8	21.3	20.9	20.6	20.2	19.9	19.6	19.4	19.1	18.9
71	21.3	20.9	20.5	20.1	19.7	19.4	19.1	18.8	18.5	18.3
72	20.9	20.5	20.0	19.6	19.3	18.9	18.6	18.3	18.0	17.7
73	20.6	20.1	19.6	19.2	18.8	18.4	18.1	17.8	17.5	17.2
74	20.2	19.7	19.3	18.8	18.4	18.0	17.6	17.3	17.0	16.7
75	19.9	19.4	18.9	18.4	18.0	17.6	17.2	16.8	16.5	16.2
76	19.6	19.1	18.6	18.1	17.6	17.2	16.8	16.4	16.0	15.7
77	19.4	18.8	18.3	17.8	17.3	16.8	16.4	16.0	15.6	15.3
78	19.1	18.5	18.0	17.5	17.0	16.5	16.0	15.6	15.2	14.9
79	18.9	18.3	17.7	17.2	16.7	16.2	15.7	15.3	14.9	14.5
80	18.7	18.1	17.5	16.9	16.4	15.9	15.4	15.0	14.5	14.1
81	18.5	17.9	17.3	16.7	16.2	15.6	15.1	14.7	14.2	13.8
82	18.3	17.7	17.1	16.5	15.9	15.4	14.9	14.4	13.9	13.5
83	18.2	17.5	16.9	16.3	15.7	15.2	14.7	14.2	13.7	13.2
84	18.0	17.4	16.7	16.1	15.5	15.0	14.4	13.9	13.4	13.0
85	17.9	17.3	16.6	16.0	15.4	14.8	14.3	13.7	13.2	12.8
86	17.8	17.1	16.5	15.8	15.2	14.6	14.1	13.5	13.0	12.5
87	17.7	17.0	16.4	15.7	15.1	14.5	13.9	13.4	12.9	12.4
88	17.6	16.9	16.3	15.6	15.0	14.4	13.8	13.2	12.7	12.2
89	17.6	16.9	16.2	15.5	14.9	14.3	13.7	13.1	12.6	12.0
90	17.5	16.8	16.1	15.4	14.8	14.2	13.6	13.0	12.4	11.9
91	17.4	16.7	16.0	15.4	14.7	14.1	13.5	12.9	12.3	11.8
92	17.4	16.7	16.0	15.3	14.6	14.0	13.4	12.8	12.2	11.7
93	17.3	16.6	15.9	15.2	14.6	13.9	13.3	12.7	12.1	11.6
94	17.3	16.6	15.9	15.2	14.5	13.9	13.2	12.6	12.0	11.5
95	17.3	16.5	15.8	15.1	14.5	13.8	13.2	12.6	12.0	11.4
96	17.2	16.5	15.8	15.1	14.4	13.8	13.1	12.5	11.9	11.3
97	17.2	16.5	15.8	15.1	14.4	13.7	13.1	12.5	11.9	11.3
98	17.2	16.4	15.7	15.0	14.3	13.7	13.0	12.4	11.8	11.2
99	17.2	16.4	15.7	15.0	14.3	13.6	13.0	12.4	11.8	11.2
100	17.1	16.4	15.7	15.0	14.3	13.6	12.9	12.3	11.7	11.1
101	17.1	16.4	15.6	14.9	14.2	13.6	12.9	12.3	11.7	11.1

Ages	70	71	72	73	74	75	76	77	78	79
102	17.1	16.4	15.6	14.9	14.2	13.5	12.9	12.2	11.6	11.0
103	17.1	16.3	15.6	14.9	14.2	13.5	12.9	12.2	11.6	11.0
104	17.1	16.3	15.6	14.9	14.2	13.5	12.8	12.2	11.6	11.0
105	17.1	16.3	15.6	14.9	14.2	13.5	12.8	12.2	11.5	10.9
106	17.1	16.3	15.6	14.8	14.1	13.5	12.8	12.2	11.5	10.9
107	17.0	16.3	15.6	14.8	14.1	13.4	12.8	12.1	11.5	10.9
108	17.0	16.3	15.5	14.8	14.1	13.4	12.8	12.1	11.5	10.9
109	17.0	16.3	15.5	14.8	14.1	13.4	12.8	12.1	11.5	10.9
110	17.0	16.3	15.5	14.8	14.1	13.4	12.7	12.1	11.5	10.9
111	17.0	16.3	15.5	14.8	14.1	13.4	12.7	12.1	11.5	10.8
112	17.0	16.3	15.5	14.8	14.1	13.4	12.7	12.1	11.5	10.8
113	17.0	16.3	15.5	14.8	14.1	13.4	12.7	12.1	11.4	10.8
114	17.0	16.3	15.5	14.8	14.1	13.4	12.7	12.1	11.4	10.8
115+	17.0	16.3	15.5	14.8	14.1	13.4	12.7	12.1	11.4	10.8

Ages	80	81	82	83	84	85	86	87	88	89
80	13.8	13.4	13.1	12.8	12.6	12.3	12.1	11.9	11.7	11.5
81	13.4	13.1	12.7	12.4	12.2	11.9	11.7	11.4	11.3	11.1
82	13.1	12.7	12.4	12.1	11.8	11.5	11.3	11.0	10.8	10.6
83	12.8	12.4	12.1	11.7	11.4	11.1	10.9	10.6	10.4	10.2
84	12.6	12.2	11.8	11.4	11.1	10.8	10.5	10.3	10.1	9.9
85	12.3	11.9	11.5	11.1	10.8	10.5	10.2	9.9	9.7	9.5
86	12.1	11.7	11.3	10.9	10.5	10.2	9.9	9.6	9.4	9.2
87	11.9	11.4	11.0	10.6	10.3	9.9	9.6	9.4	9.1	8.9
88	11.7	11.3	10.8	10.4	10.1	9.7	9.4	9.1	8.8	8.6
89	11.5	11.1	10.6	10.2	9.9	9.5	9.2	8.9	8.6	8.3
90	11.4	10.9	10.5	10.1	9.7	9.3	9.0	8.6	8.3	8.1
91	11.3	10.8	10.3	9.9	9.5	9.1	8.8	8.4	8.1	7.9
92	11.2	10.7	10.2	9.8	9.3	9.0	8.6	8.3	8.0	7.7
93	11.1	10.6	10.1	9.6	9.2	8.8	8.5	8.1	7.8	7.5
94	11.0	10.5	10.0	9.5	9.1	8.7	8.3	8.0	7.6	7.3
95	10.9	10.4	9.9	9.4	9.0	8.6	8.2	7.8	7.5	7.2
96	10.8	10.3	9.8	9.3	8.9	8.5	8.1	7.7	7.4	7.1
97	10.7	10.2	9.7	9.2	8.8	8.4	8.0	7.6	7.3	6.9
98	10.7	10.1	9.6	9.2	8.7	8.3	7.9	7.5	7.1	6.8
99	10.6	10.1	9.6	9.1	8.6	8.2	7.8	7.4	7.0	6.7
100	10.6	10.0	9.5	9.0	8.5	8.1	7.7	7.3	6.9	6.6
101	10.5	10.0	9.4	9.0	8.5	8.0	7.6	7.2	6.9	6.5
102	10.5	9.9	9.4	8.9	8.4	8.0	7.5	7.1	6.8	6.4
103	10.4	9.9	9.4	8.8	8.4	7.9	7.5	7.1	6.7	6.3
104	10.4	9.8	9.3	8.8	8.3	7.9	7.4	7.0	6.6	6.3
105	10.4	9.8	9.3	8.8	8.3	7.8	7.4	7.0	6.6	6.2
106	10.3	9.8	9.2	8.7	8.2	7.8	7.3	6.9	6.5	6.2
107	10.3	9.8	9.2	8.7	8.2	7.7	7.3	6.9	6.5	6.1
108	10.3	9.7	9.2	8.7	8.2	7.7	7.3	6.8	6.4	6.1
109	10.3	9.7	9.2	8.7	8.2	7.7	7.2	6.8	6.4	6.0
110	10.3	9.7	9.2	8.6	8.1	7.7	7.2	6.8	6.4	6.0
111	10.3	9.7	9.1	8.6	8.1	7.6	7.2	6.8	6.3	6.0
112	10.2	9.7	9.1	8.6	8.1	7.6	7.2	6.7	6.3	5.9
113	10.2	9.7	9.1	8.6	8.1	7.6	7.2	6.7	6.3	5.9
114	10.2	9.7	9.1	8.6	8.1	7.6	7.1	6.7	6.3	5.9
115+	10.2	9.7	9.1	8.6	8.1	7.6	7.1	6.7	6.3	5.9

Ages	90	91	92	93	94	95	96	97	98	99
90	7.8	7.6	7.4	7.2	7.1	6.9	6.8	6.6	6.5	6.4
91	7.6	7.4	7.2	7.0	6.8	6.7	6.5	6.4	6.3	6.1
92	7.4	7.2	7.0	6.8	6.6	6.4	6.3	6.1	6.0	5.9
93	7.2	7.0	6.8	6.6	6.4	6.2	6.1	5.9	5.8	5.6
94	7.1	6.8	6.6	6.4	6.2	6.0	5.9	5.7	5.6	5.4
95	6.9	6.7	6.4	6.2	6.0	5.8	5.7	5.5	5.4	5.2
96	6.8	6.5	6.3	6.1	5.9	5.7	5.5	5.3	5.2	5.0
97	6.6	6.4	6.1	5.9	5.7	5.5	5.3	5.2	5.0	4.9
98	6.5	6.3	6.0	5.8	5.6	5.4	5.2	5.0	4.8	4.7
99	6.4	6.1	5.9	5.6	5.4	5.2	5.0	4.9	4.7	4.5
100	6.3	6.0	5.8	5.5	5.3	5.1	4.9	4.7	4.5	4.4
101	6.2	5.9	5.6	5.4	5.2	5.0	4.8	4.6	4.4	4.2
102	6.1	5.8	5.5	5.3	5.1	4.8	4.6	4.4	4.3	4.1
103	6.0	5.7	5.4	5.2	5.0	4.7	4.5	4.3	4.1	4.0
104	5.9	5.6	5.4	5.1	4.9	4.6	4.4	4.2	4.0	3.8
105	5.9	5.6	5.3	5.0	4.8	4.5	4.3	4.1	3.9	3.7
106	5.8	5.5	5.2	4.9	4.7	4.5	4.2	4.0	3.8	3.6

Ages	90	91	92	93	94	95	96	97	98	99
107	5.8	5.4	5.1	4.9	4.6	4.4	4.2	3.9	3.7	3.5
108	5.7	5.4	5.1	4.8	4.6	4.3	4.1	3.9	3.7	3.5
109	5.7	5.3	5.0	4.8	4.5	4.3	4.0	3.8	3.6	3.4
110	5.6	5.3	5.0	4.7	4.5	4.2	4.0	3.8	3.5	3.3
111	5.6	5.3	5.0	4.7	4.4	4.2	3.9	3.7	3.5	3.3
112	5.6	5.3	4.9	4.7	4.4	4.1	3.9	3.7	3.5	3.2
113	5.6	5.2	4.9	4.6	4.4	4.1	3.9	3.6	3.4	3.2
114	5.6	5.2	4.9	4.6	4.3	4.1	3.9	3.6	3.4	3.2
115+	5.5	5.2	4.9	4.6	4.3	4.1	3.8	3.6	3.4	3.1

Ages	100	101	102	103	104	105	106	107	108	109
100	4.2	4.1	3.9	3.8	3.7	3.5	3.4	3.3	3.3	3.2
101	4.1	3.9	3.7	3.6	3.5	3.4	3.2	3.1	3.1	3.0
102	3.9	3.7	3.6	3.4	3.3	3.2	3.1	3.0	2.9	2.8
103	3.8	3.6	3.4	3.3	3.2	3.0	2.9	2.8	2.7	2.6
104	3.7	3.5	3.3	3.2	3.0	2.9	2.7	2.6	2.5	2.4
105	3.5	3.4	3.2	3.0	2.9	2.7	2.6	2.5	2.4	2.3
106	3.4	3.2	3.1	2.9	2.7	2.6	2.4	2.3	2.2	2.1
107	3.3	3.1	3.0	2.8	2.6	2.5	2.3	2.2	2.1	2.0
108	3.3	3.1	2.9	2.7	2.5	2.4	2.2	2.1	1.9	1.8
109	3.2	3.0	2.8	2.6	2.4	2.3	2.1	2.0	1.8	1.7
110	3.1	2.9	2.7	2.5	2.3	2.2	2.0	1.9	1.7	1.6
111	3.1	2.9	2.7	2.5	2.3	2.1	1.9	1.8	1.6	1.5
112	3.0	2.8	2.6	2.4	2.2	2.0	1.9	1.7	1.5	1.4
113	3.0	2.8	2.6	2.4	2.2	2.0	1.8	1.6	1.5	1.3
114	3.0	2.7	2.5	2.3	2.1	1.9	1.8	1.6	1.4	1.3
115+	2.9	2.7	2.5	2.3	2.1	1.9	1.7	1.5	1.4	1.2

Ages	110	111	112	113	114	115+
110	1.5	1.4	1.3	1.2	1.1	1.1
111	1.4	1.2	1.1	1.1	1.0	1.0
112	1.3	1.1	1.0	1.0	1.0	1.0
113	1.2	1.1	1.0	1.0	1.0	1.0
114	1.1	1.0	1.0	1.0	1.0	1.0
115+	1.1	1.0	1.0	1.0	1.0	1.0

Q–4. May the tables under this section be changed?

A–4. The Single Life Table, Uniform Lifetime Table and Joint and Last Survivor Table provided in A–1 through A–3 of this section may be changed by the Commissioner in revenue rulings, notices, and other guidance published in the Internal Revenue Bulletin. See § 601.601(d)(2)(ii)(b) of this chapter.

Par. 3. Section 1.403(b)–3 is added to read as follows:

§ 1.403(b)–3 Required minimum distributions from annuity contracts purchased, or custodial accounts or retirement income accounts established, by a section 501(c)(3) organization or a public school.

Q–1. Are section 403(b) contracts subject to the distribution rules provided in section 401(a)(9)?

A–1. (a) Yes, section 403(b) contracts are subject to the distribution rules provided in section 401(a)(9). For purposes of this section, the term *section 403(b) contract* means an annuity contract described in section 403(b)(1), custodial account described in section 403(b)(7), or retirement income account described in section 403(b)(9).

(b) For purposes of applying the distribution rules in section 401(a)(9), section 403(b) contracts will be treated as individual retirement annuities described in section 408(b) and individual retirement accounts described in section 408(a) (IRAs). Consequently, except as otherwise provided in paragraph (c) of this A–1, the distribution rules in section 401(a)(9) will be applied to section 403(b) contracts in accordance with the provisions in § 1.408–8 for purposes of determining required minimum distributions for calendar years beginning on or after January 1, 2003.

(c)(1) The required beginning date for purposes of section 403(b)(10) is April 1 of the calendar year following the later of the calendar year in which the employee attains 70½ or the calendar year in which the employee retires from employment with the employer maintaining the plan. The concept of 5-percent owner has no application in the case of employees of employers described in section 403(b)(1)(A).

(2) The rule in A–5 of § 1.408–8 does not apply to section 403(b) contracts. Thus, the surviving spouse of an employee is not permitted to treat a section 403(b) contract of which the spouse is the sole beneficiary as the spouse's own section 403(b) contract.

(3) Annuity payments provided with respect to retirement income accounts described in section 403(b)(9) will not fail to satisfy the requirements of A–4 of § 1.401(a)(9)–6T merely because the payments are not made under an annuity contract purchased from an insurance company, provided the relationship between the annuity payments and the retirement income accounts is not inconsistent with any rules prescribed by the Commissioner in revenue rulings, notices, and other guidance published in the Internal Revenue Bulletin. See § 601.601(d)(2)(ii)(b) of this chapter.

Q–2. To what benefits under section 403(b) contracts do the distribution rules provided in section 401(a)(9) apply?

A–2. (a) The distribution rules provided in section 401(a)(9) apply to

all benefits under section 403(b) contracts accruing after December 31, 1986 (post-'86 account balance). The distribution rules provided in section 401(a)(9) do not apply to the undistributed portion of the account balance under the section 403(b) contract valued as of December 31, 1986, exclusive of subsequent earnings (pre-'87 account balance). Consequently, the post-'86 account balance includes earnings after December 31, 1986 on contributions made before January 1, 1987, in addition to the contributions made after December 31, 1986 and earnings thereon.

(b) The issuer or custodian of the section 403(b) contract must keep records that enable it to identify the pre-'87 account balance and subsequent changes as set forth in paragraph (b) of this A–2 and provide such information upon request to the relevant employee or beneficiaries with respect to the contract. If the issuer or custodian does not keep such records, the entire account balance will be treated as subject to section 401(a)(9).

(c) In applying the distribution rules in section 401(a)(9), only the post-'86 account balance is used to calculate the required minimum distribution for a calendar year. The amount of any distribution from a contract will be treated as being paid from the post-'86 account balance to the extent the distribution is required to satisfy the minimum distribution requirement with respect to that contract for a calendar year. Any amount distributed in a calendar year from a contract in excess of the required minimum distribution for a calendar year with respect to that contract will be treated as paid from the pre-'87 account balance, if any, of that contract.

(d) If an amount is distributed from the pre-'87 account balance and rolled over to another section 403(b) contract, the amount will be treated as part of the post-'86 account balance in that second contract. However, if the pre-'87 account balance under a section 403(b) contract is directly transferred to another section 403(b) contract, the amount transferred retains its character as a pre-'87 account balance, provided the issuer of the transferee contract satisfies the recordkeeping requirements of paragraph (b) of this A–2.

(e) The distinction between the pre-'87 account balance and the post-'86 account balance provided for under this A–2 has no relevance for purposes of determining the portion of a distribution that is includible in income under section 72.

Q–3. Must the pre-'87 account balance be distributed in accordance with the incidental benefit requirement?

A–3. Yes, the pre-'87 account balance must be distributed in accordance with the incidental benefit requirement of § 1.401–1(b)(1)(i). Distributions attributable to the pre-'87 account balance are treated as satisfying this requirement if all distributions from the section 403(b) contract (including distributions attributable to the post-'86 account balance) satisfy the requirements of § 1.401–1(b)(1)(i) without regard to this section, and distributions attributable to the post-'86 account balance satisfy the rules of this section. Alternatively, distributions attributable to the pre-'87 account balance are treated as satisfying the incidental benefit requirement if all distributions from the section 403(b) contract (including distributions attributable to both the pre-'87 account balance and the post-'86 account balance) satisfy the rules of this section.

Q–4. Is the required minimum distribution from one section 403(b) contract of an employee permitted to be distributed from another section 403(b) contract in order to satisfy section 401(a)(9)?

A–4. Yes, as provided in paragraph (b) of A–1 of this section, the distribution rules in section 401(a)(9) will be applied to section 403(b) contracts in accordance with the provisions in § 1.408–8. Thus, the required minimum distribution must be separately determined for each section 403(b) contract of an employee. However, as provided in A–9 of § 1.408–8 with respect to IRAs, such amounts may then be totaled and the total distribution taken from any one or more of the individual section 403(b) contracts. However, consistent with the rules in A–9 of § 1.408–8, only amounts in section 403(b) contracts that an individual holds as an employee may be aggregated. Amounts in section 403(b) contracts that an individual holds as a beneficiary of the same decedent may be aggregated, but such amounts may not be aggregated with amounts held in section 403(b) contracts that the individual holds as the employee or as the beneficiary of another decedent. Distributions from section 403(b) contracts or accounts will not satisfy the minimum distribution requirements for IRAs, nor will distributions from IRAs satisfy the minimum distribution requirements for section 403(b) contracts or accounts.

Par. 4. Section 1.408–8 is added to read as follows:

§ 1.408–8 Distribution requirements for individual retirement plans.

The following questions and answers relate to the distribution rules for IRAs provided in sections 408(a)(6) and 408(b)(3).

Q–1. Is an IRA subject to the distribution rules provided in section 401(a)(9) for qualified plans?

A–1. (a) Yes, an IRA is subject to the required minimum distribution rules provided in section 401(a)(9). In order to satisfy section 401(a)(9) for purposes of determining required minimum distributions for calendar years beginning on or after January 1, 2003, the rules of §§ 1.401(a)(9)–1 through 1.401(a)(9)–9 and 1.401(a)(9)–6T for defined contribution plans must be applied, except as otherwise provided in this section. For example, whether the 5-year rule or the life expectancy rule applies to distributions after death occurring before the IRA owner's required beginning date is determined in accordance with § 1.401(a)(9)–3 and the rules of § 1.401(a)(9)–4 apply for purposes of determining an IRA owner's designated beneficiary. Similarly, the amount of the minimum distribution required for each calendar year from an individual account is determined in accordance with § 1.401(a)(9)–5. For purposes of this section, the term *IRA* means an individual retirement account or annuity described in section 408(a) or (b). The IRA owner is the individual for whom an IRA is originally established by contributions for the benefit of that individual and that individual's beneficiaries.

(b) For purposes of applying the required minimum distribution rules in §§ 1.401(a)(9)–1 through 1.401(a)(9)–9 and 1.401(a)(9)–6T for qualified plans, the IRA trustee, custodian, or issuer is treated as the plan administrator, and the IRA owner is substituted for the employee.

(c) See A–14 and A–15 of § 1.408A–6 for rules under section 401(a)(9) that apply to a Roth IRA.

Q–2. Are IRAs that receive employer contributions under a simplified employee pension (defined in section 408(k)) or a SIMPLE IRA (defined in section 408(p)) treated as IRAs for purposes of section 401(a)(9)?

A–2. Yes, IRAs that receive employer contributions under a simplified employee pension (defined in section 408(k)) or a SIMPLE plan (defined in section 408(p)) are treated as IRAs, rather than employer plans, for purposes of section 401(a)(9) and are, therefore, subject to the distribution rules in this section.

Q–3. In the case of distributions from an IRA, what does the term *required beginning date* mean?

A–3. In the case of distributions from an IRA, the term *required beginning date* means April 1 of the calendar year following the calendar year in which the individual attains age 70½.

Q–4. What portion of a distribution from an IRA is not eligible for rollover because the amount is a required minimum distribution?

A–4. The portion of a distribution that is a required minimum distribution from an IRA and thus not eligible for rollover is determined in the same manner as provided in A–7 of § 1.402(c)–2 for distributions from qualified plans. For example, if a minimum distribution is required under section 401(a)(9) for a calendar year, an amount distributed during a calendar year from an IRA is treated as a required minimum distribution under section 401(a)(9) to the extent that the total required minimum distribution for the year under section 401(a)(9) for that IRA has not been satisfied. This requirement may be satisfied by a distribution from the IRA or, as permitted under A–9 of this section, from another IRA.

Q–5. May an individual's surviving spouse elect to treat such spouse's entire interest as a beneficiary in an individual's IRA upon the death of the individual (or the remaining part of such interest if distribution to the spouse has commenced) as the spouse's own account?

A–5. (a) The surviving spouse of an individual may elect, in the manner described in paragraph (b) of this A–5, to treat the spouse's entire interest as a beneficiary in an individual's IRA (or the remaining part of such interest if distribution thereof has commenced to the spouse) as the spouse's own IRA. This election is permitted to be made at any time after the individual's date of death. In order to make this election, the spouse must be the sole beneficiary of the IRA and have an unlimited right to withdraw amounts from the IRA. If a trust is named as beneficiary of the IRA, this requirement is not satisfied even if the spouse is the sole beneficiary of the trust. If the surviving spouse makes the election, the required minimum distribution for the calendar year of the election and each subsequent calendar year is determined under section 401(a)(9)(A) with the spouse as IRA owner and not section 401(a)(9)(B) with the surviving spouse as the deceased IRA owner's beneficiary. However, if the election is made in the calendar year containing the IRA owner's death, the spouse is not required to take a required minimum distribution as the IRA owner for that calendar year. Instead, the spouse is required to take a required minimum distribution for that year, determined with respect to the deceased IRA owner under the rules of A–4(a) of § 1.401(a)(9)–5, to the extent such a distribution was not made to the IRA owner before death.

(b) The election described in paragraph (a) of this A–5 is made by the surviving spouse redesignating the account as an account in the name of the surviving spouse as IRA owner rather than as beneficiary. Alternatively, a surviving spouse eligible to make the election is deemed to have made the election if, at any time, either of the following occurs —

(1) Any amount in the IRA that would be required to be distributed to the surviving spouse as beneficiary under section 401(a)(9)(B) is not distributed within the time period required under section 401(a)(9)(B); or

(2) Any additional amount is contributed to the IRA which is subject, or deemed to be subject, to the lifetime distribution requirements of section 401(a)(9)(A).

(c) The result of an election described in paragraph (b) of this A–5 is that the surviving spouse shall then be considered the IRA owner for whose benefit the trust is maintained for all purposes under the Internal Revenue Code (e.g., section 72(t)).

Q–6. How is the benefit determined for purposes of calculating the required minimum distribution from an IRA?

A–6. For purposes of determining the minimum distribution required to be made from an IRA in any calendar year, the account balance of the IRA as of December 31 of the calendar year immediately preceding the calendar year for which distributions are required to be made is substituted in A–3 of § 1.401(a)(9)–5 for the account balance of the employee. Except as provided in A–7 and A–8 of this section, no adjustments are made for contributions or distributions after that date.

Q–7. What rules apply in the case of a rollover to an IRA of an amount distributed by a qualified plan or another IRA?

A–7. If the surviving spouse of an employee rolls over a distribution from a qualified plan, such surviving spouse may elect to treat the IRA as the spouse's own IRA in accordance with the provisions in A–5 of this section. In the event of any other rollover to an IRA of an amount distributed by a qualified plan or another IRA, the rules in § 1.401(a)(9)–7 will apply for purposes of determining the account balance for the receiving IRA and the required minimum distribution from the receiving IRA. However, because the value of the account balance is determined as of December 31 of the year preceding the year for which the required minimum distribution is being determined and not as of a valuation date in the preceding year, the account balance of the receiving IRA is only adjusted if the amount is not received in the calendar year in which the amount rolled over is distributed. In that case, for purposes of determining the required minimum distribution for the calendar year in which such amount is actually received, the account balance of the receiving IRA as of December 31 of the preceding year must be adjusted by the amount received in accordance with A–2 of § 1.401(a)(9)–7.

Q–8. What rules apply in the case of a transfer (including a recharacterization) from one IRA to another?

A–8. (a) *General rule.* In the case of a trustee-to-trustee transfer from one IRA to another IRA that is not a distribution and rollover, the transfer is not treated as a distribution by the transferor IRA for purposes of section 401(a)(9). Accordingly, the minimum distribution requirement with respect to the transferor IRA must still be satisfied. Except as provided in paragraph (b) of this A–8 for recharacterizations, after the transfer the employee's account balance and the required minimum distribution under the transferee IRA are determined in the same manner as an account balance and required minimum distribution are determined under an IRA receiving a rollover contribution under A–7 of this section.

(b) *Recharacterizations.* If an amount is contributed to a Roth IRA that is a conversion contribution or failed conversion contribution and that amount (plus net income allocable to that amount) is transferred to another IRA (transferee IRA) in a subsequent year as a recharacterized contribution, the recharacterized contribution (plus allocable net income) must be added to the December 31 account balance of the transferee IRA for the year in which the conversion or failed conversion occurred.

Q–9. Is the required minimum distribution from one IRA of an owner permitted to be distributed from another IRA in order to satisfy section 401(a)(9)?

A–9. Yes, the required minimum distribution must be calculated separately for each IRA. The separately calculated amounts may then be totaled and the total distribution taken from any one or more of the individual's IRAs under the rules set forth in this A–9. Generally, only amounts in IRAs that an individual holds as the IRA owner may

be aggregated. However, amounts in IRAs that an individual holds as a beneficiary of the same decedent and which are being distributed under the life expectancy rule in section 401(a)(9)(B)(iii) or (iv) may be aggregated, but such amounts may not be aggregated with amounts held in IRAs that the individual holds as the IRA owner or as the beneficiary of another decedent. Distributions from section 403(b) contracts or accounts will not satisfy the distribution requirements from IRAs, nor will distributions from IRAs satisfy the distribution requirements from section 403(b) contracts or accounts. Distributions from Roth IRAs (defined in section 408A) will not satisfy the distribution requirements applicable to IRAs or section 403(b) accounts or contracts and distributions from IRAs or section 403(b) contracts or accounts will not satisfy the distribution requirements from Roth IRAs.

Q–10. Is any reporting required by the trustee, custodian, or issuer of an IRA with respect to the minimum amount that is required to be distributed from that IRA?

A–10. Yes, the trustee, custodian, or issuer of an IRA is required to report information with respect to the minimum amount required to be distributed from the IRA for each calendar year to individuals or entities, at the time, and in the manner, prescribed by the Commissioner in revenue rulings, notices, and other guidance published in the Internal Revenue Bulletin (see § 601.601(d)(2)(ii)(b) of this chapter) as well as the applicable Federal tax forms and accompanying instructions.

Q–11. Which amounts distributed from an IRA are taken into account in determining whether section 401(a)(9) is satisfied?

A–11. (a) *General rule.* Except as provided in paragraph (b) of this A–11, all amounts distributed from an IRA are taken into account in determining whether section 401(a)(9) is satisfied, regardless of whether the amount is includible in income.

(b) Amounts not taken into account. The following amounts are not taken into account in determining whether the required minimum amount with respect to an IRA for a calendar year has been distributed—

(1) Contributions returned pursuant to section 408(d)(4), together with the income allocable to these contributions;

(2) Contributions returned pursuant to section 408(d)(5);

(3) Corrective distributions of excess simplified employee pension contributions under section 408(k)(6)(C), together with the income allocable to these distributions; and

(4) Similar items designated by the Commissioner in revenue rulings, notices, and other guidance published in the Internal Revenue Bulletin. See § 601.601(d)(2)(ii)(b) of this chapter.

PART 54—PENSION EXCISE TAXES

Par. 5. The authority for part 54 is amended by adding the following citation to read in part as follows:

Authority: 26 U.S.C. 7805 * * *

Section 54.4974–2 also issued under 26 U.S.C. 4974. * * *

Par. 6. Section after § 54.4974–2 is added to read as follows:

§ 54.4974–2 Excise tax on accumulations in qualified retirement plans.

Q–1. Is any tax imposed on a payee under any qualified retirement plan or any eligible deferred compensation plan (as defined in section 457(b)) to whom an amount is required to be distributed for a taxable year if the amount distributed during the taxable year is less than the required minimum distribution?

A–1. Yes, if the amount distributed to a payee under any qualified retirement plan or any eligible deferred compensation plan (as defined in section 457(b)) for a calendar year is less than the required minimum distribution for such year, an excise tax is imposed on such payee under section 4974 for the taxable year beginning with or within the calendar year during which the amount is required to be distributed. The tax is equal to 50 percent of the amount by which such required minimum distribution exceeds the actual amount distributed during the calendar year. Section 4974 provides that this tax shall be paid by the payee. For purposes of section 4974, the term required minimum distribution means the minimum distribution amount required to be distributed pursuant to section 401(a)(9), 403(b)(10), 408(a)(6), 408(b)(3), or 457(d)(2), as the case may be, and the regulations thereunder. Except as otherwise provided in A–6 of this section, the required minimum distribution for a calendar year is the required minimum distribution amount required to be distributed during the calendar year. A–6 of this section provides a special rule for amounts required to be distributed by an employee's (or individual's) required beginning date.

Q–2. For purposes of section 4974, what is a qualified retirement plan?

A–2. For purposes of section 4974, each of the following is a qualified retirement plan—

(a) A plan described in section 401(a) which includes a trust exempt from tax under section 501(a);

(b) An annuity plan described in section 403(a);

(c) An annuity contract, custodial account, or retirement income account described in section 403(b);

(d) An individual retirement account described in section 408(a) (including a Roth IRA described in section 408A);

(e) An individual retirement annuity described in section 408(b) (including a Roth IRA described in section 408A); or

(f) Any other plan, contract, account, or annuity that, at any time, has been treated as a plan, account, or annuity described in paragraphs (a) through (e) of this A–2, whether or not such plan, contract, account, or annuity currently satisfies the applicable requirements for such treatment.

Q–3. If a payee's interest under a qualified retirement plan is in the form of an individual account, how is the required minimum distribution for a given calendar year determined for purposes of section 4974?

A–3. (a) *General rule.* If a payee's interest under a qualified retirement plan is in the form of an individual account and distribution of such account is not being made under an annuity contract purchased in accordance with A–4 of § 1.401(a)(9)–6T, the amount of the required minimum distribution for any calendar year for purposes of section 4974 is the required minimum distribution amount required to be distributed for such calendar year in order to satisfy the minimum distribution requirements in § 1.401(a)(9)–5 as provided in the following (whichever is applicable)—

(1) Section 401(a)(9) and §§ 1.401(a)(9)–1 through 1.401(a)(9)–5 and 1.401(a)(9)–7 through 1.401(a)(9)–9 in the case of a plan described in section 401(a) which includes a trust exempt under section 501(a) or an annuity plan described in section 403(a);

(2) Section 403(b)(10) and § 1.403(b)–3 (in the case of an annuity contract, custodial account, or retirement income account described in section 403(b));

(3) Section 408(a)(6) or (b)(3) and § 1.408–8 (in the case of an individual retirement account or annuity described in section 408(a) or (b)); or

(4) Section 457(d) in the case of an eligible deferred compensation plan (as defined in section 457(b)).

(b) *Default provisions.* Unless otherwise provided under the qualified

retirement plan (or, if applicable, the governing instrument of the qualified retirement plan), the default provisions in A–4(a) of § 1.401(a)(9)–3 apply in determining the required minimum distribution for purposes of section 4974.

(c) *Five-year rule.* If the 5-year rule in section 401(a)(9)(B)(ii) applies to the distribution to a payee, no amount is required to be distributed for any calendar year to satisfy the applicable enumerated section in paragraph (a) of this A–3 until the calendar year which contains the date 5 years after the date of the employee's death. For the calendar year which contains the date 5 years after the employee's death, the required minimum distribution amount required to be distributed to satisfy the applicable enumerated section is the payee's entire remaining interest in the qualified retirement plan.

Q–4. If a payee's interest in a qualified retirement plan is being distributed in the form of an annuity, how is the amount of the required minimum distribution determined for purposes of section 4974?

A–4. If a payee's interest in a qualified retirement plan is being distributed in the form of an annuity (either directly from the plan, in the case of a defined benefit plan, or under an annuity contract purchased from an insurance company), the amount of the required minimum distribution for purposes of section 4974 will be determined as follows:

(a) *Permissible annuity distribution option.* A permissible annuity distribution option is an annuity contract (or, in the case of annuity distributions from a defined benefit plan, a distribution option) which specifically provides for distributions which, if made as provided, would for every calendar year equal or exceed the minimum distribution amount required to be distributed to satisfy the applicable section enumerated in paragraph (a) of A–2 of this section for every calendar year. If the annuity contract (or, in the case of annuity distributions from a defined benefit plan, a distribution option) under which distributions to the payee are being made is a permissible annuity distribution option, the required minimum distribution for a given calendar year will equal the amount which the annuity contract (or distribution option) provides is to be distributed for that calendar year.

(b) *Impermissible annuity distribution option.* An impermissible annuity distribution option is an annuity contract (or, in the case of annuity distributions from a defined benefit plan, a distribution option) under which distributions to the payee are being made that specifically provides for distributions which, if made as provided, would for any calendar year be less than the minimum distribution amount required to be distributed to satisfy the applicable section enumerated in paragraph (a) of A–3 of this section. If the annuity contract (or, in the case of annuity distributions from a defined benefit plan, the distribution option) under which distributions to the payee are being made is an impermissible annuity distribution option, the required minimum distribution for each calendar year will be determined as follows:

(1) If the qualified retirement plan under which distributions are being made is a defined benefit plan, the minimum distribution amount required to be distributed each year will be the amount which would have been distributed under the plan if the distribution option under which distributions to the payee were being made was the following permissible annuity distribution option:

(i) In the case of distributions commencing before the death of the employee, if there is a designated beneficiary under the impermissible annuity distribution option for purposes of section 401(a)(9), the permissible annuity distribution option is the joint and survivor annuity option under the plan for the lives of the employee and the designated beneficiary that provides for the greatest level amount payable to the employee determined on an annual basis. If the plan does not provide such an option or there is no designated beneficiary under the impermissible distribution option for purposes of section 401(a)(9), the permissible annuity distribution option is the life annuity option under the plan payable for the life of the employee in level amounts with no survivor benefit.

(ii) In the case of distributions commencing after the death of the employee, if there is a designated beneficiary under the impermissible annuity distribution option for purposes of section 401(a)(9), the permissible annuity distribution option is the life annuity option under the plan payable for the life of the designated beneficiary in level amounts. If there is no designated beneficiary, the 5-year rule in section 401(a)(9)(B)(ii) applies. See paragraph (b)(3) of this A–4. The determination of whether or not there is a designated beneficiary and the determination of which designated beneficiary's life is to be used in the case of multiple beneficiaries will be made in accordance with § 1.401(a)(9)–4 and A–7 of § 1.401(a)(9)–5. If the defined benefit plan does not provide for distribution in the form of the applicable permissible distribution option, the required minimum distribution for each calendar year will be an amount as determined by the Commissioner.

(2) If the qualified retirement plan under which distributions are being made is a defined contribution plan and the impermissible annuity distribution option is an annuity contract purchased from an insurance company, the minimum distribution amount required to be distributed each year will be the amount that would have been distributed in the form of an annuity contract under the permissible annuity distribution option under the plan determined in accordance with paragraph (b)(1) of this A–4 for defined benefit plans. If the defined contribution plan does not provide the applicable permissible annuity distribution option, the required minimum distribution for each calendar year will be the amount that would have been distributed under an annuity described in paragraph (b)(2)(i) or (ii) of this A–4 purchased with the employee's or individual's account used to purchase the annuity contract that is the impermissible annuity distribution option.

(i) In the case of distributions commencing before the death of the employee, if there is a designated beneficiary under the impermissible annuity distribution option for purposes of section 401(a)(9), the annuity is a joint and survivor annuity for the lives of the employee and the designated beneficiary which provides level annual payments and which would have been a permissible annuity distribution option. However, the amount of the periodic payment which would have been payable to the survivor will be the applicable percentage under the table in A–2(c) of § 1.401(a)(9)–6T of the amount of the periodic payment which would have been payable to the employee or individual. If there is no designated beneficiary under the impermissible distribution option for purposes of section 401(a)(9), the annuity is a life annuity for the life of the employee with no survivor benefit which provides level annual payments and which would have been a permissible annuity distribution option.

(ii) In the case of a distribution commencing after the death of the employee, if there is a designated beneficiary under the impermissible annuity distribution option for purposes of section 401(a)(9), the annuity option is a life annuity for the life of the designated beneficiary which provides

level annual payments and which would have been a permissible annuity distribution option. If there is no designated beneficiary, the 5-year rule in section 401(a)(9)(B)(ii) applies. See paragraph (b)(3) of this A–4. The amount of the payments under the annuity contract will be determined using the interest rate and actuarial tables prescribed under section 7520 determined using the date determined under A–3 of § 1.401(a)(9)–3 when distributions are required to commence and using the age of the beneficiary as of the beneficiary's birthday in the calendar year that contains that date. The determination of whether or not there is a designated beneficiary and the determination of which designated beneficiary's life is to be used in the case of multiple beneficiaries will be made in accordance with § 1.401(a)(9)–4 and A–7 of § 1.401(a)(9)–5.

(3) If the 5-year rule in section 401(a)(9)(B)(ii) applies to the distribution to the payee under the contract (or distribution option), no amount is required to be distributed to satisfy the applicable enumerated section in paragraph (a) of this A–4 until the calendar year which contains the date 5 years after the date of the employee's death. For the calendar year which contains the date 5 years after the employee's death, the required minimum distribution amount required to be distributed to satisfy the applicable enumerated section is the payee's entire remaining interest in the annuity contract (or under the plan in the case of distributions from a defined benefit plan).

(4) If the plan provides that the required beginning date for purposes of section 401(a)(9) for all employees is April 1 of the calendar year following the calendar year in which the employee attained age 70½ in accordance with paragraph A–2(e) of § 1.401(a)(9)–2, the required minimum distribution for each calendar year for an employee who is not a 5-percent owner for purposes of this section will be the lesser of the amount determined based on the required beginning date as set forth in A–2(a) of § 1.401(a)(9)–2 or the required beginning date under the plan. Thus, for example, if an employee dies after attaining age 70½, but before April 1 of the calendar year following the calendar in which the employee retired, and there is no designated beneficiary as of September 30 of the year following the employee's year of death, required minimum distributions for calendar years after the calendar year containing the employee's date of death may be based on either the applicable distribution period provided under either the 5-year rule of A–1 of § 1.401(a)(9)–3 or the employee's remaining life expectancy as set forth in A–5(c)(3) of § 1.401(a)(9)–5.

Q–5. If there is any remaining benefit with respect to an employee (or IRA owner) after any calendar year in which the entire remaining benefit is required to be distributed under section 401(a)(9), what is the amount of the required minimum distribution for each calendar year subsequent to such calendar year?

A–5. If there is any remaining benefit with respect to an employee (or IRA owner) after the calendar year in which the entire remaining benefit is required to be distributed, the required minimum distribution for each calendar year subsequent to such calendar year is the entire remaining benefit.

Q–6. With respect to which calendar year is the excise tax under section 4974 imposed in the case in which the amount not distributed is an amount required to be distributed by April 1 of a calendar year (by the employee's or individual's required beginning date)?

A–6. In the case in which the amount not paid is an amount required to be paid by April 1 of a calendar year, such amount is a required minimum distribution for the previous calendar year, i.e., for the employee's or the individual's first distribution calendar year. However, the excise tax under section 4974 is imposed for the calendar year containing the last day by which the amount is required to be distributed, i.e., the calendar year containing the employee's or individual's required beginning date, even though the preceding calendar year is the calendar year for which the amount is required to be distributed. There is also a required minimum distribution for the calendar year which contains the employee's or individual's required beginning date. Such distribution is also required to be made during the calendar year which contains the employee's or individual's required beginning date.

Q–7. Are there any circumstances when the excise tax under section 4974 for a taxable year may be waived?

A–7. (a) *Reasonable cause.* The tax under section 4974(a) may be waived if the payee described in section 4974(a) establishes to the satisfaction of the Commissioner the following—

(1) The shortfall described in section 4974(a) in the amount distributed in any taxable year was due to reasonable error; and

(2) Reasonable steps are being taken to remedy the shortfall.

(b) *Automatic waiver.* The tax under section 4974 will be automatically waived, unless the Commissioner determines otherwise, if—

(1) The payee described in section 4974(a) is an individual who is the sole beneficiary and whose required minimum distribution amount for a calendar year is determined under the life expectancy rule described in § 1.401(a)(9)–3 A–3 in the case of an employee's or individual's death before the employee's or individual's required beginning date; and

(2) The employee's or individual's entire benefit to which that beneficiary is entitled is distributed by the end of the fifth calendar year following the calendar year that contains the employee's or individual's date of death.

PART 602—OMB CONTROL NUMBERS UNDER THE PAPERWORK REDUCTION ACT

Par. 7. The authority citation for part 602 continues to read as follows:

Authority: 26 U.S.C. 7808.

Par. 8. In § 602.101, paragraph (b) is amended by adding entries for ''1.401(a)(9)–1,'' ''1.401(a)(9)–3,'' ''1.401(a)(9)–4,'' and ''1.403(b)–3'' to the table to read as follows:

§ 602.101 OMB Control numbers.

* * * * *

(b) * * *

CFR part or section where identified and described	Current OMB control No.
* * * * *	
1.401(a)(9)–1	1545–1573
* * * * *	
1.401(a)(9)–3	1545–1466
* * * * *	
1.401(a)(9)–4	1545–1573
* * * * *	
1.403(b)–3	1545–0996
* * * * *	

Robert E. Wenzel,

Deputy Commissioner of Internal Revenue.

Approved: March 26, 2002.

Mark Weinberger,

Assistant Secretary of the Treasury.

[FR Doc. 02–8963 Filed 4–16–02; 8:45 am]

BILLING CODE 4830–01–P

Federal Register

Wednesday,
April 17, 2002

Part III

Environmental Protection Agency

40 CFR Part 141

National Primary Drinking Water Regulations; Announcement of the Results of EPA's Review of Existing Drinking Water Standards and Request for Public Comment; Proposed Rule

ENVIRONMENTAL PROTECTION AGENCY

40 CFR Part 141

[FRL–7167–9]

RIN 2040–AD67

National Primary Drinking Water Regulations; Announcement of the Results of EPA's Review of Existing Drinking Water Standards and Request for Public Comment

AGENCY: Environmental Protection Agency (EPA).

ACTION: Review of regulations; request for comments.

SUMMARY: The Safe Drinking Water Act (SDWA) requires the United States Environmental Protection Agency (EPA) to conduct a periodic review of existing National Primary Drinking Water Regulations (NPDWRs). EPA is requesting public comment on the results of its review of 69 NPDWRs that were established prior to 1997, including 68 chemical NPDWRs and the Total Coliform Rule (TCR). The intended purpose of the review is to identify those NPDWRs for which current health risk assessments, changes in technology, and/or other factors, provide a health or technical basis to support a regulatory revision that will improve or strengthen public health protection. Based on its review, and pending an evaluation of public comments, the Agency preliminarily believes that the 68 chemical NPDWRs remain appropriate at this time, and that the TCR should be revised.

DATES: EPA must receive public comments on this action by June 17, 2002.

ADDRESSES: Please send your comments to the W–01–14 Comments Clerk. Submit electronic comments to: *ow-docket@epa.gov.* Written comments should be mailed to: Water Docket (MC–4101), U.S. Environmental Protection Agency, 1200 Pennsylvania Avenue, NW., Washington, DC, 20460. Hand deliveries should be delivered to EPA's Water Docket at East Tower Basement (EB Room 57), Waterside Mall, 401 M Street, SW., Washington, DC, 20460. You may contact the docket at (202) 260–3027 between 9 a.m. and 3:30 p.m. Eastern Time, Monday through Friday. Comments may be submitted electronically. See **SUPPLEMENTARY INFORMATION** for file formats and other information about electronic filing and docket review.

FOR FURTHER INFORMATION CONTACT: For technical inquiries contact: Judy Lebowich, (202) 564–4884, e-mail: *lebowich.judy@epa.gov,* or Wynne Miller, (202) 564–4887, e-mail: *miller.wynne@epa.gov.* For general information about, and copies of, this document or information about the existing NPDWRs discussed in this action, contact the Safe Drinking Water Hotline. Callers within the United States may reach the Hotline at (800) 426–4791. The Hotline is open Monday through Friday, excluding Federal holidays, from 9 a.m. to 5:30 p.m. Eastern Time.

SUPPLEMENTARY INFORMATION:

How Should I Submit Comments on This Action?

EPA will accept written or electronic comments (please do not send both). EPA prefers electronic comments. Commenters should use a separate paragraph for each issue discussed. No facsimiles (faxes) will be accepted. Commenters who want EPA to acknowledge receipt of their comments should also send a self-addressed, stamped envelope. If you submit written comments, please submit an original and three copies of your comments and enclosures (including references).

Electronic comments must be submitted in WordPerfect 8 (or an older version) or ASCII file format. Compressed or zipped files will not be accepted. You may file electronic comments on this action online at many Federal Depository Libraries.

The Agency's response-to-comments document for the final decision will address the comments received on this action, and the response-to-comments document will be made available in the docket.

How Can I Obtain Materials in the Docket?

The docket is available for inspection from 9:00 a.m. to 4:00 p.m., Monday through Friday, excluding legal holidays, at the Water Docket, East Tower Basement (EB Room 57), Waterside Mall, USEPA, 401 M Street, SW; Washington, DC. For access to docket (Docket Number W–01–14) materials, please call (202) 260–3027 between 9:00 a.m. and 3:30 p.m., Eastern Time, Monday through Friday, to schedule an appointment.

Does This Action Apply to My Public Water System?

This action itself does not impose any requirements on anyone. Instead, it notifies interested parties of EPA's preliminary revise/not revise decisions for 69 NPDWRs.

Abbreviations and Acronyms Used in This Action

>—greater than
2,4-D—2,4-dichlorophenoxyacetic acid
AA—activated alumina
AI—adequate intake
ASDWA—Association of State Drinking Water Administrators
ATSDR—Agency for Toxic Substances and Disease Registry
AWWA—American Water Works Association
BAT—best available technology
BMD—benchmark dose
bw—body weight
CCL—Contaminant Candidate List
CFR—Code of Federal Regulations
CMR—Chemical Monitoring Reform
CWS—community water system
DBCP—1,2-dibromo-3-chloropropane
DBPR—Disinfectants and Disinfection Byproducts Rule
DEHA—di(2-ethylhexyl)adipate
DEHP—di(2-ethylhexyl)phthalate
DRI—dietary reference intake
DWEL—drinking water equivalent level
EDB—ethylene dibromide
EPA—U.S. Environmental Protection Agency
EPTDS—entry points to a distribution system
FR—Federal Register
GAC—granular activated carbon
GC/MS—gas chromatography/mass spectrometry
HHS—Department of Health and Human Services
HPC—heterotrophic plate count
I—daily drinking water intake
IESWTR—Interim Enhanced Surface Water Treatment Rule
IRIS—Integrated Risk Information System
LCR—Lead and Copper Rule
LOAEL—lowest-observed-adverse-effect level
LT1ESWTR—Long-Term 1 Enhanced Surface Water Treatment Rule
LT2ESWTR—Long-Term 2 Enhanced Surface Water Treatment Rule
MCL—maximum contaminant level
MCLG—maximum contaminant level goal
M/DBP—Microbial/Disinfection Byproducts
MDL—method detection limit
MF—modifying factor
MFL—million fibers per liter
mg/kg/day—milligrams per kilogram of body weight per day
mg/L—milligrams per liter
MSRC—Mercury Study Report to Congress
MTD—maximum tolerated dose
N—nitrogen
NAS—National Academy of Sciences
NCOD—National Drinking Water Contaminant Occurrence Database

NDWAC—National Drinking Water Advisory Council
NIPDWR—National Interim Primary Drinking Water Regulation
NOAEL—no-observed-adverse-effect level
NPDWR—National Primary Drinking Water Regulation
NRC—National Research Council
NTNCWS—non-transient, non-community water system
NTP—National Toxicology Program
NWIS—National Water Information System
OGWDW—Office of Ground Water and Drinking Water
OPP—Office of Pesticide Programs
OW—Office of Water
PAC—powdered activated carbon
PCBs—polychlorinated biphenyls
POU—point-of-use
ppm—part per million
PQL—practical quantitation level
PTA—packed tower aeration
PWS—public water system
RDA—recommended dietary allowance
RfD—reference dose
RO—reverse osmosis
RSC—relative source contribution
SAB—Science Advisory Board
SDWA—Safe Drinking Water Act
SDWIS—Safe Drinking Water Information System
SMCL—secondary maximum contaminant level
SOC—synthetic organic chemical
SWTR—Surface Water Treatment Rule
TCR—Total Coliform Rule
TNCWS—transient, non-community water system
TT—treatment technique
TTHM—total trihalomethanes
UF—uncertainty factor
UL—tolerable upper intake level
URCIS—Unregulated Contaminant Information System
VOC—volatile organic chemical
WS—water supply

Table of Contents

I. Background and Summary of Today's Action
A. What are the Statutory Requirements for the Six-Year Review?
B. What is the Schedule for Reviewing Existing NPDWRs?
II. Stakeholder Involvement in the Six-Year Review Process
A. How Have Stakeholders Been Involved in the Review Process?
B. How Does EPA Plan to Involve the Science Advisory Board (SAB)?
III. Regulations Included in the Six-Year Review
IV. EPA's Protocol for Reviewing the NPDWRs Included in Today's Action
A. What was EPA's Review Process?
1. Initial Technical Review
2. In-Depth Technical Review
B. How Did EPA Review the Chemical NPDWRs?
1. Health Effects
2. Analytical Feasibility
3. Treatment Feasibility
4. Other Regulatory Revisions
5. Occurrence and Exposure Analysis
6. Economic Considerations
C. How Is EPA Reviewing the Total Coliform Rule?
D. How Did EPA Factor Children's Health Concerns into the Review?
V. EPA's Preliminary Decisions Based on its Review of NPDWRs Included in Today's Action
A. What Preliminary Decisions Has EPA Made Regarding the Chemical NPDWRs?
1. Acrylamide
2. Alachlor
3. Antimony
4. Asbestos
5. Atrazine
6. Barium
7. Benzene
8. Benzo[a]pyrene
9. Beryllium
10. Cadmium
11. Carbofuran
12. Carbon Tetrachloride
13. Chlordane
14. Chromium
15. Copper
16. Cyanide
17. 2,4-D (2,4-Dichlorophenoxyacetic Acid)
18. Dalapon (2,2-Dichloropropionic Acid)
19. 1,2-Dibromo-3-chloropropane (DBCP)
20. 1,2-Dichlorobenzene (o-Dichlorobenzene)
21. 1,4-Dichlorobenzene (p-Dichlorobenzene)
22. 1,2-Dichloroethane (Ethylene Dichloride)
23. 1,1-Dichloroethylene
24. cis-1,2-Dichloroethylene
25. trans-1,2-Dichloroethylene
26. Dichloromethane (Methylene Chloride)
27. 1,2-Dichloropropane
28. Di(2-ethylhexyl)adipate (DEHA)
29. Di(2-ethylhexyl)phthalate (DEHP)
30. Dinoseb
31. Diquat
32. Endothall
33. Endrin
34. Epichlorohydrin
35. Ethylbenzene
36. Ethylene Dibromide (EDB; 1,2-Dibromoethane)
37. Fluoride
38. Glyphosate
39. Heptachlor
40. Heptachlor Epoxide
41. Hexachlorobenzene
42. Hexachlorocyclopentadiene
43. Lead
44. Lindane (-Hexachlorocyclohexane)
45. Mercury (Inorganic)
46. Methoxychlor
47. Monochlorobenzene (Chlorobenzene)
48. Nitrate (as N)
49. Nitrite (as N)
50. Oxamyl (Vydate)
51. Pentachlorophenol
52. Picloram
53. Polychlorinated Biphenyls (PCBs)
54. Selenium
55. Simazine
56. Styrene
57. 2,3,7,8-TCDD (Dioxin)
58. Tetrachloroethylene
59. Thallium
60. Toluene
61. Toxaphene
62. 2,4,5-TP (Silvex; 2,4,5-Trichlorophenoxypropionic Acid)
63. 1,2,4-Trichlorobenzene
64. 1,1,1-Trichloroethane
65. 1,1,2-Trichloroethane
66. Trichloroethylene
67. Vinyl Chloride
68. Xylenes (Total)
B. What Preliminary Decision Has EPA Made Regarding the Total Coliform Rule?
1. Background
2. Technical Reviews
3. Preliminary Decision
VI. Request for Comments
A. On Which Issues is EPA Soliciting Public Comment?
B. Request for Comments on Use of Plain Language
VII. EPA's Next Steps
VIII. References
Appendix A: Background on the Calculation of MCLG and Cancer Classification System

List of Tables

Table III–1: Pre-1997 NPDWRs Included in Today's Action
Table III–2: NPDWRs Not Included in Today's Action
Table IV–1: Summary of the Outcome of the Six-Year Health Effects Review
Table IV–2: Chemical NPDWRs Included in the Analytical Feasibility Reassessment and the Result of that Assessment
Table IV–3: Chemical NPDWRs Included in the Treatment Feasibility Analysis
Table V–1: Preliminary Revise/Not Revise Decisions for the 68 Chemical NPDWRs and TCR
Table V–2: Benzene Occurrence
Table V–3: Beryllium Occurrence
Table V–4: Chlordane Occurrence
Table V–5: Chromium Occurrence
Table V–6: 1,2-Dibromo-3-chloropropane Occurrence
Table V–7: Dichloromethane Occurrence
Table V–8: 1,2-Dichloropropane Occurrence
Table V–9: Heptachlor Occurrence
Table V–10: Heptachlor Epoxide Occurrence
Table V–11: Hexachlorobenzene Occurrence
Table V–12: Oxamyl Occurrence
Table V–13: Picloram Occurrence
Table V–14: Toxaphene Occurrence
Table V–15: 1,1,2-Trichloroethane Occurrence
Table VI–1: Issues on Which EPA is Requesting Public Comment or Data
Table A–1: Cancer Classification Systems Used by EPA

List of Figures

Figure 1: Overview of the Protocol for the Revise/Not Revise Decision
Figure 2: Distribution of State Rankings: Manufacturing Establishments per Square Mile vs. Total Farm Agricultural Chemical Expenses
Figure 3: Geographic Distribution of the 16-State Cross-Section Used for Occurrence Analysis

I. Background and Summary of Today's Action

A. What Are the Statutory Requirements for the Six-Year Review?

Under the SDWA, as amended in 1996, EPA must periodically review existing national primary drinking water regulations (NPDWRs) and, if appropriate, revise them. Section 1412(b)(9) of SDWA states:

> The Administrator shall, not less often than every 6 years, review and revise, as appropriate, each national primary drinking water regulation promulgated under this title. Any revision of a national primary drinking water regulation shall be promulgated in accordance with this section, except that each revision shall maintain, or provide for greater, protection of the health of persons.

Pursuant to the SDWA 1996 Amendments, EPA developed a systematic approach, or protocol, for the review of NPDWRs discussed in today's action. EPA has applied the protocol discussed in section IV of today's action to the Agency's initial Six-Year Review of NPDWRs for total coliforms and 68 inorganic and organic chemicals, published prior to the SDWA 1996 Amendments (i.e., pre-1997 NPDWRs). Section III of today's action identifies these NPDWRs and section V of today's action contains a summary of the review findings for each of these 69 NPDWRs (see Table III–1).

While the Agency expects that modifications to the protocol will be made in subsequent six-year reviews to address changing circumstances, the Agency expects to use the framework developed for the current review as the starting point. EPA, therefore, is seeking public comment on the protocol that has been applied to the current review.

B. What Is the Schedule for Reviewing Existing NPDWRs?

EPA plans to publish its final findings with respect to the initial review of these 69 NPDWRs in the **Federal Register** (FR) in the August 2002 time frame.

In addition to these 69 NPDWRs, there are additional pre-1997 NPDWRs, which are being or have been reviewed separately from today's action. Section III explains how the Agency plans to satisfy the Six-Year Review requirement for those regulations. In most cases, EPA has performed or is performing the review in conjunction with recent or ongoing rulemakings. NPDWRs published after the 1996 SDWA Amendments will be reviewed as a part of the 2002–2008 review cycle.

II. Stakeholder Involvement in the Six-Year Review Process

A. How Have Stakeholders Been Involved in the Review Process?

Stakeholders include:

- The general public;
- Congress;
- Other Federal agencies;
- State, Tribal, and local officials;
- Public health/health care providers;
- Public interest groups;
- Public water suppliers;
- National trade associations;
- Environmental groups;
- Manufacturers; and
- Agricultural producers.

EPA involved stakeholders by: holding a stakeholder meeting; participating in national meetings, workshops, and technical forums; meeting informally with associations and technical experts; posting information on the Office of Ground Water and Drinking Water's (OGWDW's) web page (*www.epa.gov/safewater/*); and publishing this FR notice on the Six-Year Review.

EPA invited representatives from State and Tribal communities, public water systems (PWSs), public health organizations, academia, environmental and public interest groups, engineering firms, and other stakeholders to a stakeholder meeting in Washington, DC, in November 1999 (64 FR 55711, October 14, 1999 (USEPA, 1999c)). Approximately 50 participants attended, including representatives from the invited groups. EPA discussed its preliminary strategy for the Six-Year Review and invited stakeholder comment. Stakeholders generally agreed that EPA had identified the appropriate key elements for the review; however, in some cases, stakeholders suggested that EPA needed to be more proactive in seeking out new information that might affect the regulatory decision (USEPA, 1999e). For more detailed information about this stakeholder meeting, the docket for this action (Docket Number W–01–14) contains the stakeholder meeting discussion papers, the agenda, the participant list, presentation materials, and an executive meeting summary which includes the specific comments and questions posed by stakeholders. The executive meeting summary is also available on EPA's drinking water web page, *http://www.epa.gov/safewater/ccl/novmtg.html.*

In the Spring of 2000, the National Drinking Water Advisory Council (NDWAC) formed a working group to develop recommendations regarding the process the Agency should apply to conduct a periodic and systematic review of existing NPDWRs. The Working Group held two meetings and a conference call during June through September 2000 (USEPA, 2000b; USEPA, 2000c; USEPA, 2000d). The NDWAC approved the Working Group's recommendations in November 2000 and formally provided them to EPA in December 2000 (NDWAC, 2000). The NDWAC recommended that EPA's review include consideration of five key elements, as appropriate: health effects, analytical and treatment feasibility, implementation-related issues, occurrence and exposure, and economic impacts. The NDWAC suggested that the Agency conduct an initial screening review of each NPDWR to identify potential candidates for an in-depth analysis. As discussed in more detail in section IV of today's action, EPA has followed the general protocol recommended by the NDWAC.

In addition to the November 1999 stakeholder meeting and consultation with the NDWAC, EPA representatives have delivered presentations at a variety of meetings held by other organizations, including: two American Water Works Association (AWWA) Technical Advisory Workgroup meetings, one held in February 2001 in Washington, DC, and one held in February 2002 in San Diego, CA; a meeting held by the Association of State Drinking Water Administrators (ASDWA) in March 2001 in Alexandria, VA; and the annual AWWA meeting held in Washington, DC in June 2001. At each of these meetings, stakeholders were given the opportunity to comment on the protocol by which EPA was planning to perform the review of existing NPDWRs. EPA received valuable input from stakeholders on the planned protocol.

B. How Does EPA Plan To Involve the Science Advisory Board (SAB)?

EPA plans to consult with the SAB Drinking Water Committee on today's action. The Agency will request their review and comment on whether the protocol EPA developed based on the NDWAC recommendations was consistently applied and appropriately documented.

III. Regulations Included in the Six-Year Review

Table III–1 lists the pre-1997 NPDWRs covered by today's action and the rulemaking by which they were originally promulgated. Table III–2 lists the NPDWRs not covered by today's action. These include the remaining pre-1997 NPDWRs which are being or have already been reviewed in separate actions and the NPDWRs promulgated after the 1996 SDWA Amendments. The

NPDWRs listed in Table III–2 will be included in the 2002–2008 review round. Section V of today's action summarizes the results of the review of 68 pre-1997 chemical NPDWRs and the NPDWR for total coliforms.

BILLING CODE 6560–50–P

Table III-1: Pre-1997 NPDWRs Included in Today's Action

Contaminant	Corresponding NPDWR
Chemical Contaminants	
Acrylamide	Phase II Rule
Alachlor	Phase II Rule
Antimony	Phase V Rule
Asbestos	Phase II Rule
Atrazine	Phase II Rule
Barium	Phase IIB Rule
Benzene	Phase I Rule
Benzo[a]pyrene	Phase V Rule
Beryllium	Phase V Rule
Cadmium	Phase II Rule
Carbofuran	Phase II Rule
Carbon tetrachloride	Phase I Rule
Chlordane	Phase II Rule
Chromium (total)	Phase II Rule
Copper	Lead and Copper Rule (LCR)
Cyanide	Phase V Rule
2,4-D	Phase II Rule
Dalapon	Phase V Rule
1,2-Dibromo-3-chloropropane (DBCP)	Phase II Rule
1,2-Dichlorobenzene (*o*-Dichlorobenzene)	Phase II Rule
1,4-Dichlorobenzene (*p*-Dichlorobenzene)	Phase I Rule
1,2-Dichloroethane (Ethylene dichloride)	Phase I Rule
1,1-Dichloroethylene	Phase I Rule
cis-1,2-Dichloroethylene	Phase II Rule
trans-1,2-Dichloroethylene	Phase II Rule
Dichloromethane (Methylene chloride)	Phase V Rule
1,2-Dichloropropane	Phase II Rule
Di(2-ethylhexyl)adipate (DEHA)	Phase V Rule
Di(2-ethylhexyl) phthalate (DEHP)	Phase V Rule
Dinoseb	Phase V Rule
Diquat	Phase V Rule
Endothall	Phase V Rule

Contaminant	Corresponding NPDWR
Chemical Contaminants (continued)	
Endrin	Phase V Rule
Epichlorohydrin	Phase II Rule
Ethylbenzene	Phase II Rule
Ethylene dibromide (EDB)	Phase II Rule
Fluoride	Fluoride Rule; Phase II Rule revised monitoring requirements
Glyphosate	Phase V Rule
Heptachlor	Phase II Rule
Heptachlor epoxide	Phase II Rule
Hexachlorobenzene	Phase V Rule
Hexachlorocyclopenta-diene	Phase V Rule
Lead	LCR
Lindane	Phase II Rule
Mercury (Inorganic)	Phase II Rule
Methoxychlor	Phase II Rule
Monochlorobenzene (Chlorobenzene)	Phase II Rule
Nitrate (as N)	Phase II Rule
Nitrite (as N)	Phase II Rule
Oxamyl (Vydate)	Phase V Rule
Pentachlorophenol	Phase IIB Rule
Picloram	Phase V Rule
Polychlorinated biphenyls (PCBs)	Phase II Rule
Selenium	Phase II Rule
Simazine	Phase V Rule
Styrene	Phase II Rule
2,3,7,8-TCDD (Dioxin)	Phase V Rule
Tetrachloroethylene	Phase II Rule
Thallium	Phase V Rule
Toluene	Phase II Rule
Toxaphene	Phase II Rule
2,4,5-TP (Silvex)	Phase II Rule
1,2,4-Trichlorobenzene	Phase V Rule
1,1,1-Trichloroethane	Phase I Rule

Table III-1: Pre-1997 NPDWRs Included in Today's Action

Contaminant	Corresponding NPDWR
Chemical Contaminants (continued)	
Trichloroethylene	Phase I Rule
Vinyl chloride	Phase I Rule
Xylenes (total)	Phase II Rule
1,1,2-Trichloroethane	Phase V Rule

Contaminant	Corresponding NPDWR
Microorganisms	
Total coliforms (including fecal coliform and *E. coli*)	Total Coliform Rule (TCR)

Dates of original promulgation are as follows:

- Phase II Rule: 56 *FR* 3526, January 30, 1991 (USEPA, 1991a)
- Phase V Rule: 57 *FR* 31776, July 17, 1992 (USEPA, 1992)
- Phase IIB Rule: 56 *FR* 30266, July 1, 1991 (USEPA, 1991c)
- Phase I Rule: 52 *FR* 25690, July 8, 1987 (USEPA, 1987)
- LCR: 56 *FR* 26460, June 7, 1991 (USEPA, 1991b)
- Fluoride Rule: 51 *FR* 11396, April 2, 1986 (USEPA, 1986a)
- TCR: 54 *FR* 27544, June 29, 1989 (USEPA, 1989c)

Table III-2: NPDWRs Not Included in Today's Action		
Contaminant/Indicator	**Corresponding NPDWR[1]**	**Reason Not Included**
Chemical Contaminants		
Arsenic	Pre-1986 National Interim Primary Drinking Water Regulation (NIPDWR)	Reviewed/revised under January 22, 2001 Arsenic Rule[2,3]
Radionuclides		
Beta particles and photon emitters	Pre-1986 NIPDWR	Reviewed/revised under December 7, 2000 Radionuclides Rule[2]
Gross alpha particle activity		
Radium-226/228 (combined)		
Uranium	2000 Radionuclides Rule	Promulgated after 1996. NPDWR established in the December 7, 2000 Radionuclides Rule[2]
Microorganisms		
Cryptosporidium	Interim Enhanced Surface Water Treatment Rule (IESWTR) Long-Term 1 Enhanced Surface Water Treatment Rule (LT1ESWTR)	Subject of ongoing rulemaking activity - Long-Term 2 ESWTR (LT2ESWTR) (November 2003)[4]
Giardia lambia	Surface Water Treatment Rule (SWTR); IESWTR; LT1ESWTR	
Heterotrophic plate count (HPC)	SWTR	
Legionella	SWTR	
Turbidity	SWTR; IESWTR; LT1ESWTR	
Viruses	SWTR; IESWTR; LT1ESWTR	
Disinfection Byproducts		
Bromate ion	Stage 1 Disinfectants and Disinfection Byproducts Rule Stage I (DBPR)	Revised rule promulgated after 1996 and additional revisions to be considered under Stage 2 DBPR (July 2003)[4]
Chlorite ion		
Haloacetic acids: Monobromoacetic acid; Dibromoacetic acid; Monochloroacetic acid; Dichloroacetic acid; and Trichloroacetic acid		
Total Trihalomethanes (TTHMs): Chloroform; Bromodichloromethane; Dibromochloromethane; and Bromoform	TTHM Rule; Requirements revised under Stage 1 DBPR	Revised rule promulgated after 1996 and additional revisions to be considered under Stage 2 DBPR (July 2003)[4]
Disinfectant Residuals		
Chlorine	Stage 1 DBPR	Revised rule promulgated after 1996
Chloramines		
Chlorine dioxide		

Table III-2: NPDWRs Not Included in Today's Action

Contaminant/Indicator	Corresponding NPDWR[1]	Reason Not Included

[1] Dates of original promulgation are as follows:

– Arsenic Rule: 40 *FR* 59566, December 24, 1975 (USEPA, 1975)

– Radionuclides Rule: 41 *FR* 28402, July 9, 1976 (USEPA, 1976)

– IESWTR: 63 *FR* 69478, December 16, 1998 (USEPA, 1998c)

– LT1ESWTR: 67 *FR* 1811, January 14, 2002 (USEPA, 2002b)

– SWTR: 54 *FR* 27486, June 29, 1989 (USEPA, 1989c)

– Stage 1 DBPR Rule: 63 *FR* 69389, December 16, 1998 (USEPA, 1998b)

– TTHM Rule: 44 *FR* 68624, November 29, 1979 (USEPA, 1979)

[2] Indicates date of rule revision.

– Arsenic Rule: 66 *FR* 6976, January 22, 2001 (USEPA, 2001a)

– Radionuclides Rule: 65 *FR* 76707, December 7, 2000 (USEPA, 2000g)

[3] After promulgation of the revised arsenic NPDWR on January 22, 2001, EPA initiated a review of the new maximum contaminant level (MCL), and postponed the effective date of the rule until February 22, 2002. EPA requested independent expert panel reviews of the science, cost and benefits analyses for the January 2001 rule, and in July 2001, sought additional public comment on a range of MCLs. Following receipt of the final expert panel reports in the Fall of 2001, EPA requested comment on the reports. EPA will continue to evaluate the expert panel reports, the voluminous comments received during these comment periods, and other relevant information and comments as they become available as part of the next six-year review; EPA expects to make a final decision on whether to revise the January 2001 rule as part of that six-year review, which is due in August 2008. In the meantime, as announced by the Administrator on October 31, 2001, EPA will not further postpone the January 2001 rule, and EPA also does not expect to take any other additional action relative to the July 2001 proposal in the interim. The revised arsenic MCL became effective on February 22, 2002. The date for compliance with the MCL remains January 23, 2006.

[4] Indicates anticipated date of promulgation.

BILLING CODE 6560–50–C

IV. EPA's Protocol for Reviewing the NPDWRs Included in Today's Action

A. What Was EPA's Review Process?

The document, "EPA Protocol for the Review of Existing National Primary Drinking Water Regulations" (USEPA, 2002f), contains a detailed description of the process the Agency used to review the 69 NPDWRs discussed in today's action. EPA's primary goal was to identify and prioritize candidates for regulatory revision in order to target those revisions that are most likely to result in an increased level of public health protection and/or result in substantial cost savings while maintaining the level of public health protection. This section provides an overview of the review process. Sections IV.B and IV.C of today's action provide a more detailed description of how EPA applied the process to the review of 68 chemical NPDWRs and the TCR, respectively.

EPA applied the following basic principles to the review process:

- Health effects, analytical feasibility, treatment data, and analyses underlying existing regulations remain adequate and relevant, except in those instances where reliable, peer-reviewed, new data are available that indicate a need to re-evaluate an NPDWR (e.g., where a change in health risk assessment has occurred).
- If new data were available, EPA determined whether changes in existing standards were warranted. For example, in determining whether there was a change in analytical feasibility, the Agency applied the current policy and procedures for calculating the practical quantitation level for drinking water contaminants.[1]
- EPA was unable to complete evaluation of certain new data within the time available for the review. For example, if a new health risk assessment for a contaminant was not completed during the review cycle, EPA generally made a "not revise" decision on the rationale that it was not appropriate to revise the regulation while the assessment was ongoing. When an updated assessment is completed, EPA will review the update and any new conclusions or additional information associated with the contaminant during the next review cycle. The Agency may make a determination to revise a particular NPDWR before August 2008 where justified by new public health risk information.
- During the review, EPA identified areas where information is inadequate or unavailable (data gaps) and is needed before an NPDWR may be considered as a candidate for revision. Where the Agency has been unable to fill such gaps during the review process, today's action provides information about the data gaps so that further research and data collection can be considered as part of the second review cycle. For example, the review may identify a need to better understand new treatment technologies. Such an information gap will need to be considered in the context of EPA's overall OGWDW research strategy.
- During the review process, the Agency did not consider potential regulatory revisions that were already the subject of other rulemaking activities.
- EPA applied the Agency's peer review policy (USEPA, 2000i), where appropriate, to any new analyses.

Figure 1 provides an overview of the review process. To most efficiently utilize limited resources and assure

[1] See: 50 FR 46880, November 13, 1985 (USEPA, 1985); 52 FR 25690, July 8, 1987 (USEPA, 1987); 54 FR 22062, May 22, 1989 (USEPA, 1989a).

continued public health protection, the Agency conducted the review in two phases: (1) an initial technical review of all 69 NPDWRs discussed in today's action; and (2) an in-depth technical evaluation of those NPDWRs identified during the initial review as potential candidates for revision.

1. Initial Technical Review

The initial review phase included these three screening and general evaluation steps:

- *Health effects review.* Identify NPDWRs for which the Agency has revised health risk assessments that indicate possible changes to the maximum contaminant level goal (MCLG) and perhaps to the maximum contaminant level (MCL);
- *Current technology review.* Identify NPDWRs where improvements in analytical measurement or treatment feasibility might allow the MCL to be established closer to the MCLG, or where adjustments in treatment technique (TT) requirements might be appropriate; and/or
- *Other regulatory revisions review.* Identify NPDWRs where adjustments to system monitoring and reporting requirements might be appropriate and where such changes are not already being considered as a part of another activity.

EPA generally determined that an NPDWR was not a candidate for revision after the initial review if a health risk assessment was in process or was initiated as a result of the review, since the Agency does not believe it is appropriate to revise the NPDWR while a health risk assessment is underway. The Agency also determined that an NPDWR was not a candidate for revision after the initial screening if none of the initial screening analyses identified a health or technological basis for a regulatory revision.

2. In-Depth Technical Review

The Agency subjected the remaining NPDWRs to more in-depth technical analyses. If the initial review indicated a possible revision to the MCLG/MCL, EPA further considered health and technology factors that might affect the development of a revised MCLG/MCL or revised MCLG/TT requirements. The Agency also estimated potential occurrence and exposure at PWSs at concentrations of regulatory interest for the chemical NPDWRs and conducted a qualitative evaluation of economic impacts. EPA based the qualitative economic evaluation primarily on available occurrence and exposure data, to determine whether the possible revision was likely to present an opportunity for significant gains in public health protection and/or significant cost savings that could be realized without lessening the level of public health protection.

In the case of three contaminants, EPA identified data gaps that could not be filled during the current review cycle. Figure 1 shows the identification of data gaps as the final step in the review; however, in some instances, data gaps were identified during earlier steps in the process. Where this occurred, EPA did not conduct some or all of the remaining analyses. If the Agency identified data gaps, EPA determined not to revise the NPDWR.

After completing these comprehensive analyses, EPA identified those NPDWRs that remain appropriate at this time, and those NPDWRs that may be appropriate for revision.

Today's action discusses the Agency's preliminary determinations and seeks public comment on them. After considering the public comments received and any new peer-reviewed data that may become available to the Agency, EPA will publish its final decision in the FR.

BILLING CODE 6560–50–P

Figure 1: Overview of the Protocol for the Revise/Not Revise Decision

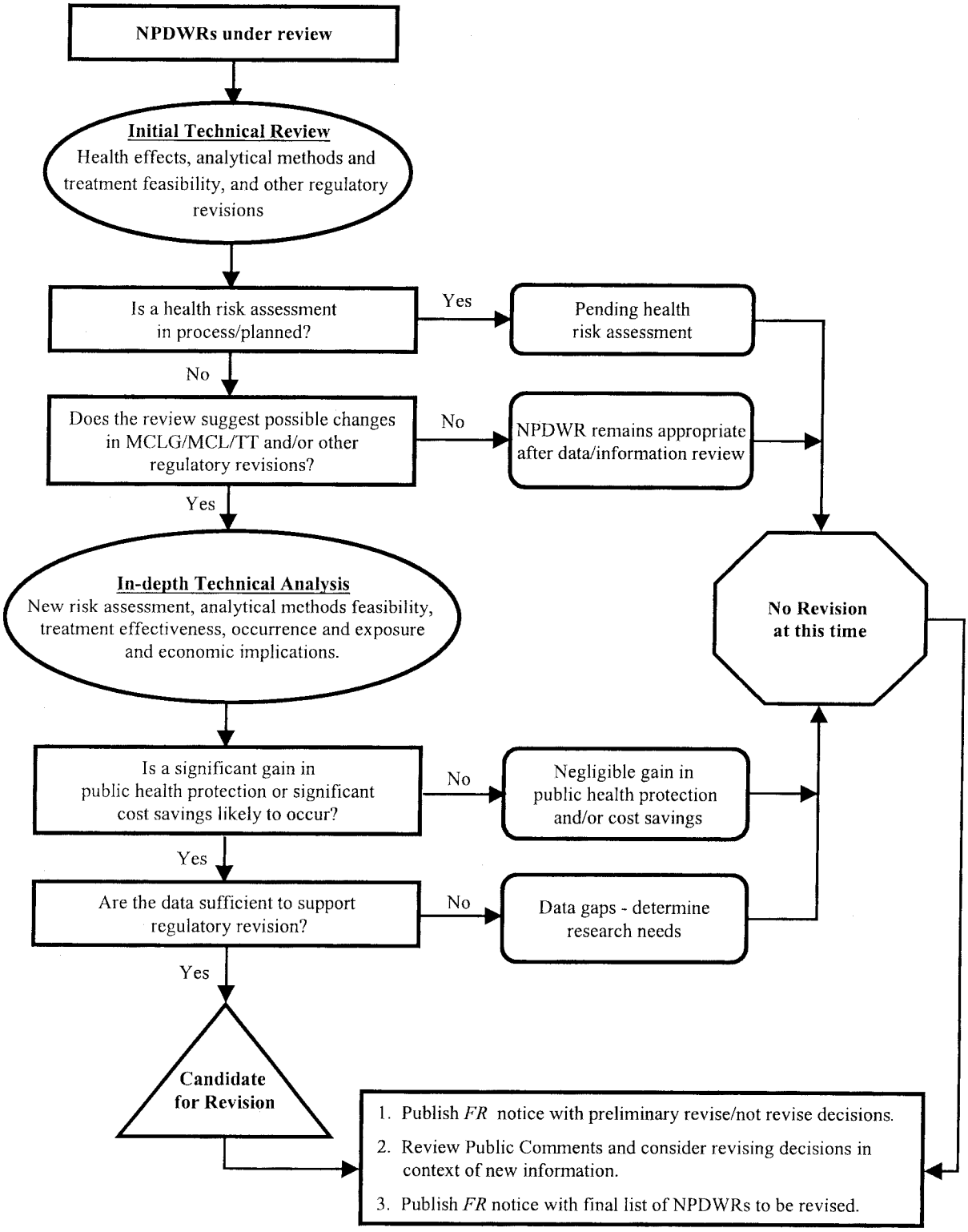

BILLING CODE 6560–50–C

B. How Did EPA Review the Chemical NPDWRs?

This section describes the specific technical reviews that EPA conducted for the chemical NPDWRs.

1. Health Effects

The document, ''Six-Year Review—Chemical Contaminants—Health Effects Technical Support Document'' (USEPA, 2002i), describes how EPA reviewed the chemical contaminants discussed in today's action and provides the results of the health effects technical review. The principal objective of the health effects review was to identify each contaminant for which a new health risk assessment indicated that a change in MCLG might be appropriate. For most of

the chemical NPDWRs discussed in today's action, the MCLG is derived from the cancer classification and/or the reference dose (RfD), as described in Appendix A. Therefore, the health effects technical review focused on whether there has been a change to these values. The Agency reviewed the results of health risk assessments completed under the following programs to determine if there had been a change in critical effect or dose-response pattern that indicates the possible need for an MCLG revision.

- EPA Integrated Risk Information System (IRIS);
- EPA Office of Pesticide Programs (OPP);
- Agency for Toxic Substances and Disease Registry (ATSDR); and
- National Academy of Sciences (NAS).

Table IV–1 reflects the outcome of the health effects review for the 68 chemical NPDWRs discussed in today's action. EPA placed each contaminant into one of the following categories.

- *New risk assessment 1997 or later.* An IRIS, OPP, ATSDR, and/or NAS assessment has been completed in 1997 or later. These assessments have considered developmental and reproductive toxicity as a part of the assessment. The Agency considers these assessments to be recent enough that it is not necessary to conduct a literature search to identify any additional relevant studies that have become available on the toxicological effects of these contaminants. In cases where the health risk assessment resulted in a change in the critical effect, or the dose-response pattern for a regulated contaminant, and where that change could result in a change in the MCLG, EPA subjected the NPDWR to more in-depth analysis as a part of the review process. Where recent assessments were conducted by an agency other than EPA and new developmental and reproductive data were identified, EPA initiated an update of its assessment.
- *New risk assessment since promulgation, but prior to 1997.* An IRIS, OPP, ATSDR, and/or NAS assessment has been completed since the NPDWR was promulgated but prior to 1997. None of these assessments reflected a change in RfD or cancer classification. However, since these assessments may not have specifically considered developmental and reproductive health effects, EPA conducted a full literature search, including developmental and reproductive toxicity, for those NPDWRs with non-zero MCLGs to identify any relevant studies that might affect the MCLGs of these contaminants. EPA did not identify any chemicals for which developmental or reproductive effects might now be the critical effect.[2]
- *Agency risk assessment in process and not completed as of February 2002.* The Agency currently is conducting a health risk assessment for the contaminant. That assessment will consider all relevant studies that have become available on the toxicology of the contaminant, including developmental and reproductive toxicity. EPA does not believe it is appropriate to revise the MCLG for these contaminants at this time.
- *Original NPDWR risk assessment.* No health risk assessment has been conducted since promulgation of the NPDWR. The Agency conducted a full toxicological literature search, including developmental and reproductive toxicity, for each of these contaminants with non-zero MCLGs (see footnote 2) to identify new toxicological studies that might have an impact on the MCLGs. In a few instances, the results of the literature search indicate that it might be appropriate to revise the RfD and/or cancer classification. EPA initiated updates to the risk assessments for these chemicals, and established a schedule for their completion. EPA does not believe it is appropriate to revise the MCLG at this time.

Thus, only contaminants in the first category might be potential candidates for an MCLG revision at this time.

The initial health effects review identified beryllium, oxamyl, and picloram as potential candidates for an MCLG revision, depending on the outcome of the more in-depth health effects review and on the other technical analyses (e.g., analytical feasibility, treatment, occurrence, etc.). The initial health effects review also identified changes in the RfD for chromium as well as data gaps with respect to its potential carcinogenicity via oral ingestion. EPA also identified health effects-related data gaps for fluoride. Contaminants in any of the categories except the third (risk assessment in process) may be candidates for a new assessment if the initial health effects review identified new studies that may affect the contaminant's RfD or cancer classification. EPA has initiated a new assessment for cyanide, di(2-ethylhexyl)adipate, and thallium as a result of the health effects technical review.

BILLING CODE 6560–50–P

[2] A zero MCLG is already considered protective of public health and new information on developmental and reproductive effects would not affect the MCLG. However, for those NPDWRs with a zero MCLG, EPA reviewed available information to inquire whether data show a nonlinearity of the dose-response; EPA did not find any data to support such a mode of action (USEPA, 2002i).

Table IV-1: Summary of the Outcome of the Six-Year Health Effects Review for Chemical NPDWRs

Risk Assessment Timing		Literature Search Status/Results		Outcome of Health Effects Review	Contaminants
		Reproductive/ developmental endpoints only	*Other toxicological endpoints*		
New risk assessment 1997 or later		Already considered in the assessment, so literature search not necessary	Already considered in the assessment, so literature search not necessary	Change in assessment	**4 Total** - Beryllium; Chromium; Oxamyl; Picloram
				Change in assessment but negligible gain in health protection	**1 Total** - Hexachlorocyclopentadiene
				No change in assessment	**8 Total** - Barium; Benzene; Chlordane; Dichloromethane; Lead; Mercury (inorganic); Selenium; Vinyl chloride
				New assessment initiated or planned	**2 Total** - Cyanide, Fluoride[1]
New risk assessment since promulgation but prior to 1997	Zero MCLG	Literature not reviewed since zero MCLG is protective	Zero MCLG remains appropriate	Zero MCLG retained	**5 Total** - 1,2-Dibromo-3-chloropropane; Heptachlor; Heptachlor epoxide; Hexachlorobenzene; Toxaphene
	Non-zero MCLG	New information does not support a need to revise the RfD or cancer classification	New information does not support a need to revise the RfD or cancer classification	No revisions to MCLG	**5 Total** - cis-1,2-Dichloroethylene; trans-1,2-Dichloroethylene; Endrin; Nitrate; Nitrite
Agency risk assessment in process and not completed as of February 2002		Literature search addressed as part of ongoing assessment	Literature search addressed as part of ongoing assessment	Not appropriate to revise MCLG at this time	**33 Total**[2]- Acrylamide; Alachlor; Antimony; Asbestos; Atrazine; Benzo[a]pyrene; Cadmium; Carbofuran; Carbon tetrachloride; Copper; 2,4-D; 1,2-Dichlorobenzene; 1,4-Dichlorobenzene; 1,2-Dichloroethane; 1,1-Dichloroethylene; Di(2-ethylhexyl)phthalate; Diquat, Endothall; Ethylbenzene; Ethylene dibromide; Glyphosate; Lindane; Methoxychlor; Pentachlorophenol; Polychlorinated biphenyls; Simazine; Styrene; 2,3,7,8-TCDD (Dioxin); Tetrachloroethylene; Toluene; 1,1,1-Trichloroethane; Trichloroethylene; Xylenes (total)
Original NPDWR risk assessment	Zero MCLG	Literature not reviewed since zero MCLG is protective	Zero MCLG remains appropriate	Zero MCLG retained	**2 Total** - 1,2-Dichloropropane; Epichlorohydrin
	Non-zero MCLG	New information	Literature not reviewed - to be considered in new assessment	Initiated new assessment as a result of health effects review	**2 Total** - Di(2-ethylhexyl)adipate; Thallium
		New information does not support a need to revise the RfD or cancer classification	New information does not support a need to revise the RfD or cancer classification	No revisions to MCLG	**6 Total** - Dalapon; Dinoseb; Monochlorobenzene; 2,4,5-TP (Silvex); 1,2,4-Trichlorobenzene; 1,1,2-Trichloroethane

[1] See contaminant specific discussion for fluoride in section V.A.37.
[2] These 33 contaminants do not include risk assessments initiated as a result of the Six-Year Review. For copper, NAS recommended retaining the MCLG.

BILLING CODE 6560–50–C

2. Analytical Feasibility

Since EPA has a process in place to approve new analytical methods for drinking water contaminants, the actual review and approval of potential new methods are outside the scope of the Six-Year Review protocol. EPA recognizes that the approval and addition of new and/or improved analytical methods (since the promulgation of the NPDWRs under this review) may enhance the ability of laboratories to quantify contaminants at lower levels. For this reason, EPA evaluated whether there have been changes in analytical feasibility for a subset of the 68 chemical NPDWRs discussed in today's action. The document, "Analytical Feasibility Support Document for the Six-Year

Review of Existing National Primary Drinking Water Regulations (Reassessment of Feasibility for Chemical Contaminants)'' (USEPA, 2002d), describes the process EPA used to evaluate possible changes in analytical feasibility and provides the results of the analytical feasibility analyses. The purpose of these analyses is to determine whether changes in the practical quantitation level (PQL) are possible in those instances where the MCL is limited, or might be limited, by analytical feasibility. EPA uses the PQL to estimate the level at which laboratories can routinely measure a chemical contaminant in drinking water. Historically, EPA has used two main approaches to determine a PQL for SDWA analytes: (1) data from water supply (WS) studies, the preferred alternative when sufficient WS data are available; or (2) a multiplier method, in which the PQL is calculated by multiplying the EPA-derived method detection limit (MDL) by a factor of 5 or 10 (50 FR 46880, November 13, 1985 (USEPA, 1985); 52 FR 25690, July 8, 1987 (USEPA, 1987); 54 FR 22062, May 22, 1989 (USEPA, 1989a)).

EPA performed the analytical feasibility analyses under two circumstances. First, for those contaminants where the MCL is currently limited by analytical feasibility (i.e., the MCL is set at the PQL) and the MCLG is still appropriate, EPA evaluated the currently approved methods for those contaminants and available WS data to determine whether it might be possible to lower the PQL and hence set an MCL that is closer to the MCLG. Section V of today's action provides the results of the analytical feasibility review of 11 contaminants that are not currently undergoing a health risk assessment and for which the MCL was limited by analytical feasibility. These 11 contaminants include 10 with zero MCLGs [3] and 1 with a non-zero MCLG. Of these 11, EPA identified 10 where the data indicate it might be possible to set a lower PQL (see Table IV–2). Although the data are indicative of a lower PQL for these 10, they are not definitive and considered to be insufficient to support an actual recalculation at this time. To determine whether it was worthwhile to gather more definitive data for PQL recalculation, EPA estimated what the potentially lower PQL could be for these 10 analytes and used these values in the occurrence and exposure analyses.[4] As discussed for specific contaminants in section V of today's action, EPA believes that a negligible gain in public health exists at the possibly lower PQL for 9 of these 10 NPDWRs. The results of the occurrence and exposure analysis for dichloromethane, using the possibly lower PQL as a concentration value, indicate that it may be appropriate to consider gathering data to recalculate a more definitive PQL for this analyte.

The second circumstance under which EPA re-evaluated the PQL was for three of the four contaminants identified under the health effects technical review as potential candidates for revision (see Table IV–2). These three contaminants were evaluated to determine if any potential MCL revision would be limited by analytical feasibility. Based on this review, EPA believes that analytical feasibility may be a limiting factor for revising the MCL for oxamyl (see section V.A.50 of today's action for a more detailed discussion). The Agency believes that analytical feasibility would not be a limiting factor for the remaining two contaminants identified by the health effects review as having potential changes in their MCLG (i.e., beryllium and chromium).

BILLING CODE 6560–50–P

[3] Although they have a zero MCLG, EPA excluded lead and epichlorohydrin from the analytical feasibility review since they are TT rules and do not have an MCL.

[4] Using WS data to derive the PQL for chemical NPDWRs involves determining the concentration of an analyte at which 75 percent of EPA Regional and State laboratories achieve results within a specified acceptance window (see 54 FR 22062 at 22100, May 22, 1989 (USEPA, 1989a)). In re-evaluating more recent WS data for the Six-Year Review, sufficient data were not available around the 75 percent critierion to actually recalculate the PQL. However, if the passing rates for the EPA Regional and State laboratories exceeded 80 to 85 percent at spike concentrations close to the current PQL, this information was considered to be indicative of a possible change in the PQL. If data indicated a possible change in the PQL, EPA then evaluated the distribution of the analytical methods used to analyze the spike samples in the WS studies. Evaluation of the method usage over time allowed EPA to determine the analytical methods that appear to be the most widely used for the analysis of a particular contaminants. Knowledge of which analytical methods are the most widely used, along with the MDL for these methods, and a 10 times MDL multiplier allowed EPA to estimate where the potential lower limit of quantitation may lie today. This estimated PQL was used as a value in the occurrence analysis to help the Agency determine if there may be a significant gain in public health protection if EPA were to consider gathering the information needed to recalculate the PQL.

Table IV-2: Chemical NPDWRs Included in the Analytical Feasibility Reassessment and the Result of that Assessment

	SDWA Chemical Contaminant	Current PQL (mg/L)[1] (PQL at the time of the original promulgation)	Result of the Six-Year Analytical Feasibility Reassessment
Eleven NPDWRs Limited by Analytical Feasibility[2] (MCL set at the PQL)			
1	Benzene	0.005	WS data indicate possible change
2	Chlordane	0.002	WS data indicate possible change
3	1,2-Dibromo-3-chloropropane (DBCP)	0.0002	WS data indicate possible change
4	Dichloromethane	0.005	WS data indicate possible change
5	1,2-Dichloropropane	0.005	WS data indicate possible change
6	Heptachlor	0.0004	WS data indicate possible change
7	Heptachlor epoxide	0.0002	WS data indicate possible change
8	Hexachlorobenzene	0.001	WS data indicate possible change
9	Toxaphene	0.003	WS data indicate possible change
10	1,1,2-Trichloroethane (Non-zero MCLG = 0.003 mg/L)	0.005	WS data indicate possible change
11	Vinyl chloride	0.002	Current PQL still appropriate
Three of the Four NPDWRs Identified Under the Health Effects Review as Potential Candidates for Revision[3]			
1	Beryllium	0.001	Current PQL not a limiting factor
2	Chromium (total - Cr III and VI)	0.01	Current PQL not a limiting factor
3	Oxamyl (Vydate)	0.02	Current PQL may be a limiting factor

[1] Milligrams per liter (mg/L).

[2] Although 23 NPDWRs have MCLs that were set due to the limits of analytical feasibility, EPA is only discussing the results of the analytical feasibility analysis for these 11, since the remaining 12 are undergoing or scheduled for a health risk reassessment.

[3] Since the health effects review for picloram indicates a potential increase in the MCLG, it is not necessary to evaluate analytical feasibility for this analyte.

BILLING CODE 6560–50–C

3. Treatment Feasibility

An NPDWR either identifies the Best Available Technology (BAT) for meeting an MCL, or establishes enforceable treatment technique (TT) requirements. Currently, for all the chemical NPDWRs covered in today's action that include an MCL, the MCL is set equal to either the MCLG or the PQL. None of these MCLs are currently limited by treatment feasibility. Thus, as a part of the Six-Year Review process, EPA only needed to review available information on treatment technologies if either of the following conditions applied:

- The health effects technical review identified a potential change to the MCLG/MCL (applied to 4 NPDWRs); or
- A health risk assessment is not in process for the contaminant and one of the following two conditions apply:

(1) the analytical feasibility review identified a possible change to the PQL and thus to the MCL (applied to 10 NPDWRs); or

(2) the NPDWR is a TT-type rule (applied to 3 NPDWRs).

The draft EPA document, "Water Treatment Technology Feasibility Support Document for Chemical Contaminants; In Support of EPA Six-Year Review of National Primary Drinking Water Regulations" (USEPA, 2002k), describes the process EPA used to evaluate treatment feasibility, where appropriate, for the chemical NPDWRs discussed in today's action and provides the results of these analyses. As a part of this review, EPA utilized the same sources that have been the primary resources in development of EPA regulations and guidance, including published EPA treatment reports, peer-reviewed journals, and other technology sources, as well as information received from EPA stakeholders.

a. *MCL-type Rules.* EPA evaluated existing treatment technology information for 14 MCL-type NPDWRs (see Table IV–3) to determine whether treatment feasibility would be a limiting factor if EPA were to lower the MCL. In addition and where appropriate, EPA evaluated the likelihood that systems would discontinue existing treatment if EPA were to raise the MCL.

Based upon this preliminary evaluation, the Agency believes that treatment capabilities would be adequate to support a lower MCL value, if EPA were to revise the MCL for any of the contaminants for which a lower MCL may be appropriate (USEPA, 2002k). Treatment technologies specified as BAT within the current NPDWR, and small system compliance technologies which were specified by EPA in 1998 (USEPA, 1998a) are considered to be efficient and practical for implementation at PWSs. However, if EPA were to determine that it is appropriate to revise any of these NPDWRs, it would undertake a more thorough review of treatment feasibility, including a consideration of costs, to

determine whether treatment feasibility would be a constraint or not. In a few instances, the Agency identified some potential treatment effectiveness research needs that will be considered in the context of the overall drinking water research strategy.[5] The revise/not revise decisions discussed in section V of today's action do not depend on EPA addressing these research needs.

In two instances (beryllium[6] and picloram), the outcome of the health effects technical review indicated it might be appropriate to raise the MCLG/MCL. For these two contaminants, BATs specified in the NPDWR are also BATs for several other contaminants (USEPA, 2002k). Available data are insufficient for EPA to determine how many PWSs are specifically treating for either of these contaminants using the same treatment for co-occurring contaminants and/or for secondary benefits. The Agency thus cannot determine whether these water systems would discontinue existing treatment if the MCL were to be raised (USEPA, 2002c; USEPA, 2002k). However, in both cases, relatively few systems would be affected so there would be little potential for significant cost savings at a national level.

BILLING CODE 6560–50–P

Table IV-3: Chemical NPDWRs Included in the Treatment Feasibility Analysis

Ten Contaminants Where Analytical Feasibility Assessments Indicate Potential for an MCL Change			
1	Benzene	6	Heptachlor
2	Chlordane	7	Heptachlor Epoxide
3	1,2-Dibromo-3-chloropropane (DBCP)	8	Hexachlorobenzene
4	Dichloromethane	9	Toxaphene
5	1,2-Dichloropropane	10	1,1,2-Trichloroethane
Four Contaminants Where Health Effects Assessments Indicate Potential for an MCLG/MCL Change			
1	Beryllium	3	Oxamyl
2	Chromium	4	Picloram

BILLING CODE 6560–50–C

b. *Treatment Technique-type Rules.* EPA reviewed three of the four chemical NPDWRs for which a TT is set in lieu of an MCL (copper, epichlorohydrin, and lead). A health risk assessment is in process for the fourth TT-type NPDWR, acrylamide.

The Agency found no new information relating to new treatment or other technology which would support a revision to the TT for epichlorohydrin at this time. EPA also reviewed issues relating to current TT requirements for copper and lead that were identified by EPA and/or stakeholders. Sections V.A.15 and V.A.43 of today's action summarize these issues for copper and lead, respectively. EPA believes these TT requirements remain appropriate at this time; however, EPA has identified a few potential treatment effectiveness research needs and will consider them in the context of the overall drinking water research strategy (USEPA, 2002k).

4. Other Regulatory Revisions

In addition to possible revisions to MCLGs, MCLs, and TTs, EPA considered other regulatory revisions, such as monitoring and system reporting requirements, as a part of the Six-Year Review process. EPA focused this review on issues that are not already being addressed, or have not been addressed, through alternative mechanisms (e.g., as part of a recent or ongoing rulemaking, in conjunction with possible chemical monitoring reform, etc.). Where appropriate alternative mechanisms do not exist, EPA considered these implementation-related concerns if the potential revision met the following criteria:

- It indicated a potential change in the 40 Code of Federal Regulations (CFR) 141 requirements;
- It was "ready" for rulemaking—that is, the problem to be resolved has been clearly identified and specific option(s) have been formulated to address the problem; and
- It met at least one of the following conditions:

—Clearly improved the level of public health protection; and/or

—Represented a significant cost savings while maintaining or improving the public health protection.

The document, "Consideration of Other Regulatory Revisions for Chemical Contaminants in Support of the Six-Year Review of National Primary Drinking Water Regulations" (USEPA, 2002e) summarizes the specific issues identified during the review process. Some of these issues (e.g., the need to specifically define new system/new source monitoring requirements for chemical contaminants) have already been addressed in the recently published arsenic and radionuclides NPDWRs (66 FR 6975, January 22, 2001 (USEPA, 2001a); 65 FR 76707, December 7, 2000 (USEPA, 2000g)). Additional issues are contaminant-specific, and are discussed in conjunction with the review of the NPDWR in section V of today's action.

5. Occurrence and Exposure Analysis

EPA's goal in evaluating contaminant occurrence was to estimate the number of PWSs at which contaminants occur at levels of regulatory interest in drinking water, and to evaluate the number of people exposed to these levels. For its occurrence analysis, EPA used drinking water compliance monitoring data from 16 States, collected in the 1993 to 1997 time frame, and statistically analyzed the data to estimate occurrence. The

[5] Refer to the document, "Water Treatment Technology Feasibility Support Document for Chemical Contaminants; In Support of EPA Six-Year Review of National Primary Drinking Water Regulations" (USEPA, 2002k) for a description of these research needs.

[6] As discussed in section V.A.9.b of today's action, the outcome of the health effects technical review indicates it might be possible to either lower or raise the MCLG/MCL.

support document ''Occurrence Estimation Methodology and Occurrence Findings Report for the Six-Year Regulatory Review'' describes in detail the development of the data set and the statistical methodology for analysis (USEPA, 2002g). This section presents a summary of the data and analysis.

a. *Development of the 16-State Contaminant Occurrence Data Set.* For the current Six-Year Review, EPA used PWS contaminant monitoring results, voluntarily provided by 16 States, as the primary source of information. EPA selected these States based on their geographic diversity and on their agricultural and industrial pollution potential. EPA also used data from a number of additional sources for comparative purposes. These secondary sources include the Safe Drinking Water Information System (SDWIS), the U.S. Geological Survey's National Water Information System (NWIS), EPA's Unregulated Contaminant Information System (URCIS), and other privately- and publicly-available data sources (USEPA, 2002g). In future reviews rounds, EPA plans to use the National Drinking Water Contaminant Occurrence Database (NCOD) as the primary data source when conducting the occurrence and exposure analyses as a part of the Six-Year Review process. EPA is in the process of populating the NCOD, however, sufficient data from the NCOD are not yet available.

EPA developed the 16-State contaminant occurrence data set in two stages. In the first stage, EPA developed an 8-State cross-section to support occurrence analyses for its Chemical Monitoring Reform (CMR) evaluation. The Agency selected the eight States for use in a national analysis because they provided the best data quality and completeness, and formed a balanced national cross-section of occurrence data based on the States' geographic distribution and relative rankings in pollution potential, as described later in this section. The methodology for selecting the State data sets is described in an EPA report, ''A Review of Contaminant Occurrence in Public Water Systems'' (USEPA, 1999d). EPA had this report externally peer reviewed and also received public comment from stakeholders. In the second stage, for the current Six-Year Review, EPA augmented the data from the CMR 8-State data set with data from 8 additional States. The resulting data set includes 13 million analytical results, from approximately 41,000 PWSs in 16 States. For the 14 contaminants that EPA identified for detailed occurrence analysis, i.e., those with either new health effects information or a potential change in the PQL (see Table IV–3 of today's action), the number of analytical results per contaminant varies from about 34,000 to greater than 200,000; the number of PWSs with data varies from about 8,000 to 23,000; and the number of States providing relevant data varies from 13 to 16.

All samples in the 16-State data set were standard SDWA compliance samples. Data were limited to those with confirmed water source and sampling type information. ''Special'' samples, ''investigation'' samples (investigating a contaminant problem, that would likely bias the results), or samples of unknown type were excluded from further analysis. EPA conducted various quality control and review checks of the results, including follow-up questions to the States providing the data to clarify potential reporting inconsistencies, records with invalid codes, or use of analytical units. The Agency then compiled State data sets into a single database with a unified format.

In selecting a cross-section of State data sets that is generally representative of the U.S., EPA considered two broad factors: geographic or spatial diversity, and pollution potential. Geographic diversity in the data set helps to ensure that contaminant occurrence data come from areas representing the range of climatic and hydrologic conditions across the U.S. A range of agricultural and industrial pollution potential helps to ensure that the data represent the range of likely contaminant occurrence across the United States.

As indicators of States' pollution potential, EPA used two primary measures: the number of manufacturing facilities per square mile (to reflect the potential for VOC occurrence), and the total expenditures on farm agricultural chemicals (to reflect the potential for synthetic organic chemical (SOC) occurrence). In order to construct a cross-section with a balance of pollution potential, EPA divided the 50 States into high and low pollution potential groups based on their rank orderings with respect to the two primary pollution potential indicators. For each of the two pollution potential indicators, EPA ranked the 50 States from 1 to 50 (1 being the highest and 50 being the lowest). The States were then plotted on a two-dimensional scatter plot (see Figure 2), with the x- and y-axes representing the manufacturing and agricultural ranking, respectively, of each State. The amount spent on agricultural chemicals per State increases along the y-axis from bottom to top. The number of manufacturing establishments per square mile per State increases along the x-axis from left to right. EPA then reviewed the rankings and selected a subset of 16 States (the ''cross-section States'') in order to give approximate balance across the range of pollution indicators.

BILLING CODE 6560–50–P

Figure 2: Distribution of State Rankings: Manufacturing Establishments per Square Mile vs. Total Farm Agricultural Chemical Expenses

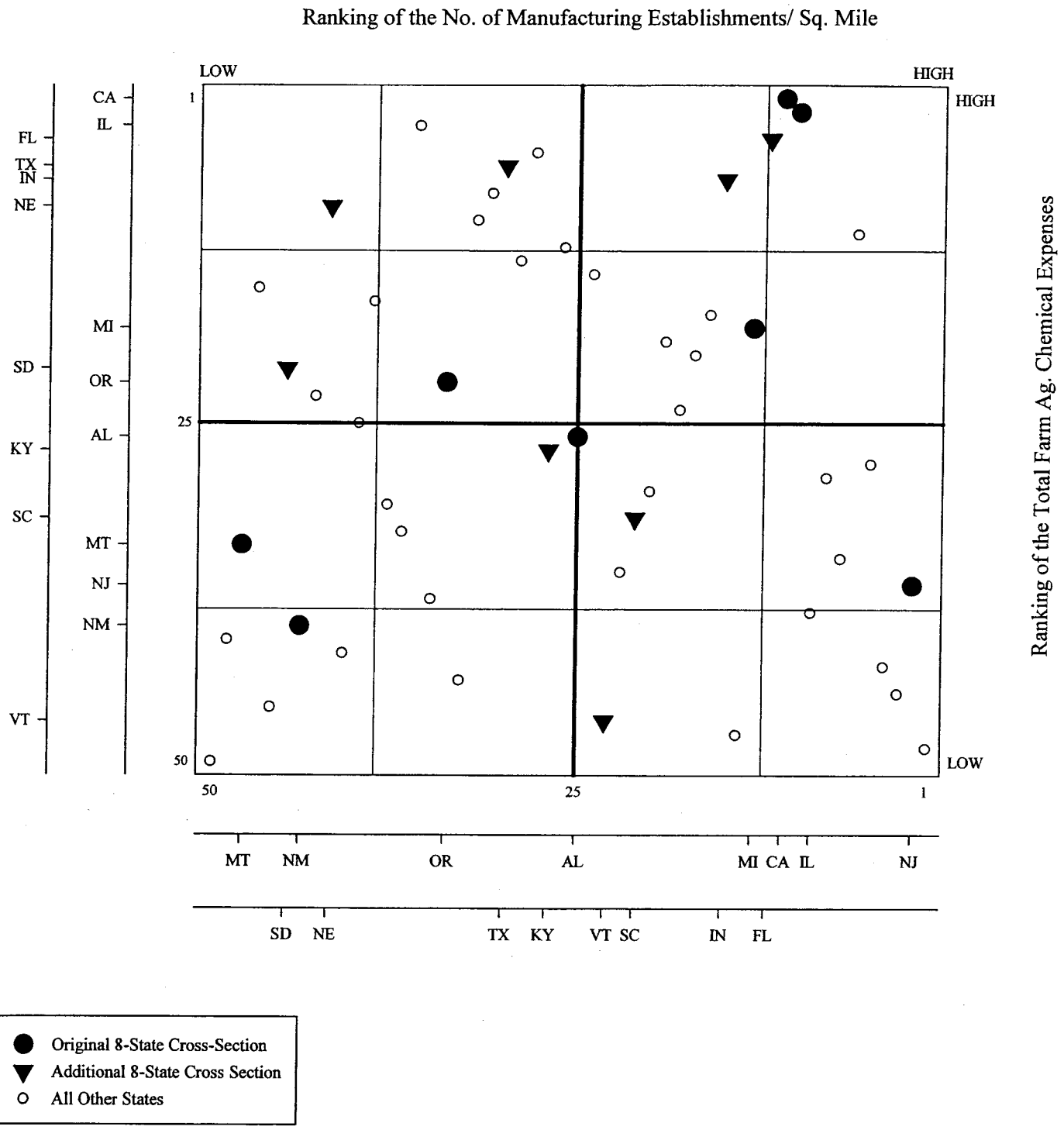

BILLING CODE 6560–50–C

The bold cross in the center of Figure 2 separates the plot into four quadrants. The upper right-hand quadrant contains the States with the most manufacturing establishments per square mile and the greatest amount of farm agricultural chemical expenses. These States, therefore, have the greatest amount of pollution potential based on these manufacturing and agricultural indicators. The lower left-hand quadrant

contains the States with the least amount of manufacturing establishments per square mile and the least amount of farm agricultural chemical expenses. This quadrant, therefore, contains the States with the least amount of pollution potential, based on these indicators. To identify the location of each of the 16 States within the quadrants, find the intersection of the State name from the x- and the y-axes. This intersection should be represented by either a filled-in circle (one of the original 8 States), or a filled-in triangle (one of the additional 8 States).

The Agency performed analyses to verify the validity of this approach. The results of these analyses support the applicability of these indicators relative to pollution potential. The mean concentration values for select contaminants were estimated for groups of top quartile and bottom quartile States. The cross-section development approach presumes that the top quartile States have a higher pollution potential than the bottom quartile States, and, therefore, the estimated mean concentrations for the top quartile States should be greater than those for the bottom quartile States. The estimated mean concentration values for the top quartile States were always higher than the mean concentration for the bottom quartile States with the lone exception of heptachlor (a very low occurrence SOC).

EPA believes the distribution of the 16 selected States is representative of the national distribution of States with respect to these pollution indicators. Eight of the selected States comprised EPA's original 8-State cross-section that was used for the CMR analyses; EPA solicited occurrence data from the remaining eight. The geographic distribution of the resulting 16-State cross-section is shown in Figure 3. Other, secondary pollution potential indicators were also considered in order to help ensure that the data were representative of the range of pollution potential across the U.S.

While this cross-section does not represent a statistical random sample of States, and thus, does not capture all local variations in occurrence, EPA, nonetheless, believes that the data set provides a reliable picture of overall distribution of contaminant occurrence in the U.S.

BILLING CODE 6560–50–P

Figure 3: Geographic Distribution of the 16-State Cross-Section Used for Occurrence Analysis

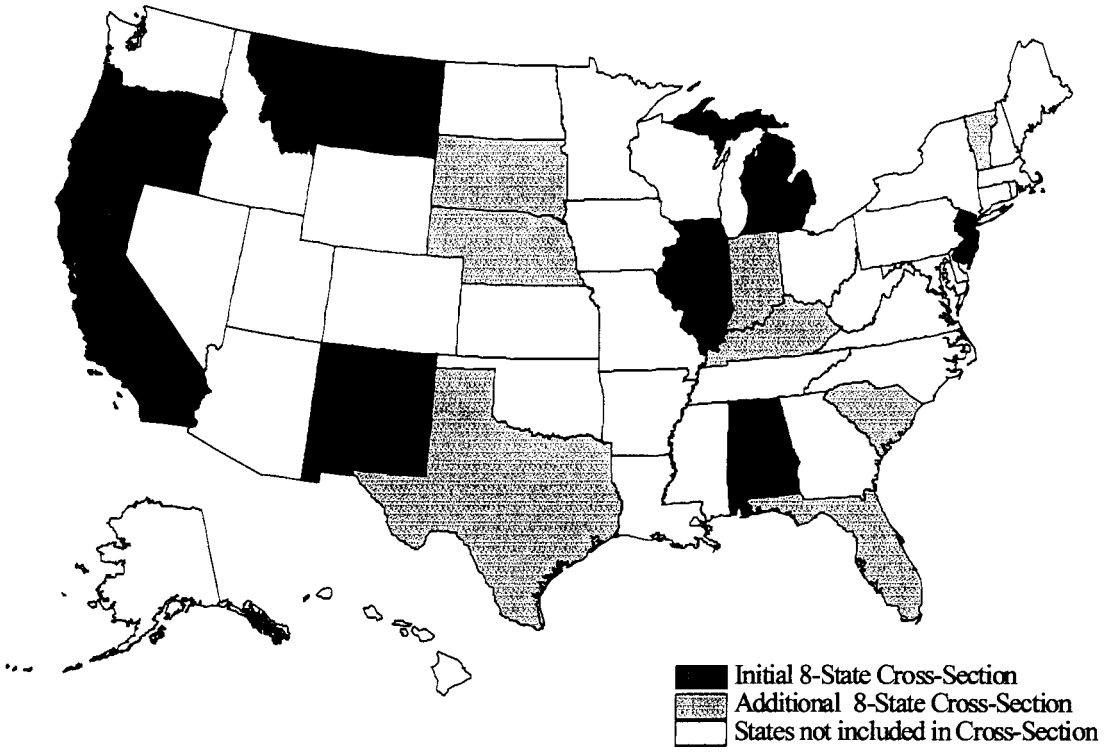

BILLING CODE 6560–50–C

b. *Analysis of Contaminant Occurrence.* Statistical analysis of contaminant occurrence was focused at the water system level. The goal was to estimate the fraction of PWSs with contaminant occurrence above levels of regulatory interest, and the corresponding fraction of people exposed to those levels.

Occurrence analysis proceeded in two stages. For the initial, or ''Stage 1'' analysis, EPA computed simple occurrence measures which are more straightforward and conservative than a full probabilistic analysis. In this stage of analysis, EPA estimated the percent of PWSs and total population served by PWSs with at least one analytical result exceeding concentrations equal to specified contaminant levels. EPA considered three specified contaminant levels: The lower limit of detection reported by the States, one-half the current MCL, and the current MCL. Of the 68 chemicals discussed in today's

action, 60 were analyzed in this way. The exceptions were:

- The two contaminants for which not enough data were available (dioxin and asbestos);
- The four contaminants for which the NPDWR specifies a TT-type requirement instead of an MCL (acrylamide, copper, epichlorohydrin, and lead); and
- The two contaminants for which EPA did not request data, since the Agency determined there was no health or technological basis for revising, and because these data would have required extra effort for States to transmit (nitrate and nitrite).

Because of the simple and conservative nature of Stage 1 estimates, EPA used them only as preliminary indicators of contaminant occurrence, to guide further analysis. The occurrence support document (USEPA, 2002g) includes the details of the Stage 1 analyses.

Following the initial occurrence analysis, EPA performed a more detailed, ''Stage 2'' statistical analysis of occurrence for the 14 contaminants identified as potential candidates by the health effects and analytical feasibility technical reviews. This analysis used a statistical model, known as a Bayesian hierarchical model, to estimate the number of systems (and the corresponding affected populations) with mean contaminant concentrations above the levels of regulatory interest. Statistical modeling is usually required in order to estimate mean contaminant concentrations, because many sample concentrations are non-detects, meaning that the true concentration is unknown and may range anywhere from zero to the detection limit of the analytical method. In the hierarchical model, individual samples are assumed to be log-normally distributed within entry points to a distribution system (EPTDS) (e.g., wells or treatment plants); EPTDS means are assumed to be log-normally distributed within each water system; and system means are assumed to be log-normally distributed nationwide. This model can be applied to estimate the number of systems with mean concentrations above levels of interest, and also the amount of variability between sources within a system. Population exposure can also be estimated at the same time, by using information from EPA's SDWIS database about the population served by each system in the database. The hierarchical model has important advantages:

- It provides a unified model for estimating occurrence, both between and within systems;
- It uses information about non-detected concentrations; and
- It provides uncertainty intervals around each estimate, taking into account both sampling variability over time and across systems, and uncertainty due to non-detected concentrations.

Details of the hierarchical model, and its application to estimating mean contaminant concentrations, are provided in the occurrence support document (USEPA, 2002g).

The results of the Stage 2 analyses for each of the 14 contaminants listed in Table IV–3 are presented in section V.A of today's action. These results represent only the systems in EPA's 16-State database. EPA considered this the most straightforward and accurate way to present the data that were available for the review process. As indicated in the preceding discussion of the development of the analysis of contaminant occurrence, EPA developed the more refined Stage 2 analysis based on the preliminary evaluation using the results of the Stage 1 analysis. A detailed explanation of this process is provided in EPA's occurrence support document and is available for review and comment (USEPA, 2002g).

For those contaminants where occurrence was evaluated with respect to the revise/not revise decision, EPA used the Stage 2 occurrence analysis for the 16 States to determine the percentage of PWSs that could be impacted, and the percentage of the exposed population served by these systems. Section V contains a discussion of the incremental percentage of systems and the incremental percentage of the population served by these systems. That is, EPA considered the difference between levels of occurrence and exposure above the current MCL and the occurrence and exposure at the potentially revised level(s).

6. Economic Considerations

While SDWA provides the Agency with broad discretion to consider economics in the context of the Six-Year Review, the statute precludes EPA from using economics as the sole basis for a revision that would provide less health protection than the current standard (i.e., anti-backsliding). However, if new peer-reviewed scientific health effects research indicates that an MCLG could be raised while maintaining public health protection, then such a change is permitted. For NPDWRs published after the 1996 SDWA Amendments, Congress added specific requirements for economic and cost-benefit analyses in their development. Where EPA decides to revise an NPDWR based on health effects or other technical reasons, economic factors, including feasibility and an assessment of costs and benefits in accordance with Section 1412(b)(6) of the SDWA, must then be taken into consideration. EPA considered likely economic impacts, based primarily on available occurrence and exposure data, to qualitatively evaluate whether the potential revisions identified by the health and technology reviews may present a significant opportunity for improved or strengthened public health standards and/or a significant cost savings while maintaining public health protection (USEPA, 2002c).

C. How Is EPA Reviewing the Total Coliform Rule?

The memorandum, ''Six-Year Review of the Total Coliform Rule—Comments Received'' (USEPA, 2002j), describes the process EPA applied to the review of the TCR. Where appropriate, EPA applied the same approach to reviewing the TCR as it did to the review of the chemical NPDWRs discussed in today's action. However, because of the nature of the TCR and the pathogens it controls, the Agency focused its review on the implementation-related requirements. As discussed in section V.B of today's action, these analyses indicate that a rulemaking to initiate possible revisions to the TCR is appropriate at this time.

D. How Did EPA Factor Children's Health Concerns Into the Review?

The 1996 amendments to SDWA require special consideration of all sensitive populations (infants, children, pregnant women, elderly, and immunocompromised) in the development of drinking water regulations (Section 1412(b)(3)(C)(V) of SDWA, as amended in 1996). Over the past decade, the amount of available data on the impact of chemical contaminants on conception and early developmental life stages has increased dramatically. Accordingly, as a part of the Six-Year Review process, EPA completed a literature search covering developmental and reproductive endpoints (fertility, embryo survival, developmental delays, birth defects, endocrine effects, etc.) for regulated chemicals that have a non-zero MCLG and have not been the subject of an updated 1997 or later risk assessment (see section IV.B.1 of today's action). EPA reviewed the output from the literature searches to identify any studies that might have an influence on the present MCLG. Three chemicals were identified with potential developmental/reproductive endpoints of concern: cyanide, di(2-ethylhexyl)adipate (DEHA), and

thallium (see sections V.A.16, V.A.28, and V.A.59 of today's action). In each case, where the literature search indicated a need to consider recent studies of developmental or reproductive toxicity, EPA has initiated the process to update the Agency risk assessment. Assessments conducted by EPA, ATSDR, and NAS in 1997 or later thoroughly considered the potential for reproductive and developmental toxicity; thus, literature searches for chemicals with such recent assessments were not necessary.

Young children, especially infants, are generally at greater health risk from infections caused by waterborne pathogens. Any revision to the TCR will maintain or improve the control of waterborne pathogens and, therefore, the protection afforded to children.

V. EPA's Preliminary Decisions Based on its Review of NPDWRs Included in Today's Action

Table V–1 lists EPA's preliminary revise/not revise decision for each of the 69 NPDWRs discussed in today's action along with the principal rationale for the decision. If EPA has decided it is not appropriate to revise an NPDWR at this time, that decision is based on one of the following reasons.

- *Health risk assessment is in process:* The Agency is currently conducting, or has scheduled, a detailed review of current health effects information. Because the results of the assessment are not yet available, the Agency does not believe it is appropriate to make a ''revise decision'' at this time. In these cases, today's action does not include a discussion of the review of other key elements (e.g., technology, ''other regulatory revisions'', and occurrence/exposure analyses). EPA will consider the results of the updated health risk assessment during the 2002–2008 review cycle. However, if the results of the health risk assessment indicate a compelling need to reconsider the MCLG, EPA may decide to accelerate the review schedule for that contaminant's NPDWR.
- *NPDWR remains appropriate after data/information review:* The outcome of the review indicates that the current regulatory requirements remain appropriate and, therefore, no regulatory revisions are warranted. Any new information available to the Agency either supports the current regulatory requirements or does not justify a revision.
- *New information, but no revision recommended because:*

—*Negligible gain in public health protection:* Any resulting changes to the NPDWR would not significantly improve the level of public health protection or result in a major cost savings.

—*Information Gaps:* Although results of the review support consideration of a possible revision, the available data are insufficient to support a definitive regulatory decision at this time.

BILLING CODE 6560–50–P

Table V-1: Preliminary Revise/Not Revise Decisions for the 68 Chemical NPDWRs and TCR

Not Appropriate for Revision at this Time	Risk assessment in process: chemical currently undergoing an EPA health risk assessment; includes the three initiated as a result of this review [1] *(36 NPDWRs)*		Acrylamide (TT)[2] (2004 / 2005) Alachlor (2002 / 2003) Antimony (2002 / 2003) Asbestos (2004 / 2005) Atrazine (2002) Benzo[a]pyrene (2002 / 2003) Cadmium (2002 / 2003) Carbofuran (2002 / 2003) Carbon tetrachloride (2002 / 2003) Copper (TT) [2] (2002 / 2003) Cyanide (2004 / 2005)[1] 2,4-D (2003 / 2004) 1,2-Dichlorobenzene (2002 / 2003) 1,4-Dichlorobenzene (2002 / 2003) 1,2-Dichloroethane (2002 / 2003) 1,1-Dichloroethylene (2002 / 2003) Di(2-ethylhexyl)adipate (2003 / 2004)[1] Di(2-ethylhexyl)phthalate (2002 / 2003)	Diquat (2002) Endothall (2003 / 2004) Ethylbenzene (2002 / 2003) Ethylene dibromide (2002 / 2003) Glyphosate (2002 / 2003) Lindane (2003 / 2004) Methoxychlor (2002 / 2003) Pentachlorophenol (2002 / 2003) Polychlorinated biphenyls (2002 / 2003) Simazine (2003 / 2004) Styrene (2002 / 2003) 2,3,7,8-TCDD (Dioxin) (2002 / 2003) Tetrachloroethylene (2002 / 2003) Thallium (2004 / 2005)[1] Toluene (2002 / 2003) 1,1,1-Trichloroethane (2003 / 2004) Trichloroethylene (2002 / 2003) Xylenes (2002 / 2003)
	NPDWR remains appropriate after data/information review *(17 NPDWRs)*		Barium Dalapon cis-1,2-Dichloroethylene trans-1,2-Dichloroethylene Dinoseb Endrin Epichlorohydrin (TT)[2] Hexachlorocyclopentadiene Lead (TT)[2]	Mercury Monochlorobenzene Nitrate Nitrite Selenium 2,4,5-TP (Silvex) 1,2,4-Trichlorobenzene Vinyl chloride
	New information, but no revision recommended because:	*Negligible gain in health protection (12 NPDWRs)*	Benzene Beryllium Chlordane 1,2-Dibromo-3-chloropropane 1,2-Dichloropropane Heptachlor	Heptachlor epoxide Hexachlorobenzene Oxamyl Picloram Toxaphene 1,1,2-Trichloroethane
		Information gaps (3 NPDWRs)	Chromium Dichloromethane[3]	Fluoride[4]
Candidates for Revision	Based on other regulatory revisions *(1 NPDWR)*		Total Coliform Rule (TCR)	

[1] New information was identified for cyanide, di(2-ethylhexyl)adipate, and thallium as a result of the six-year health effects review. The Agency has initiated new risk assessments for these three contaminants.

[2] TT designates treatment-technique rules (i.e., those NPDWRs for which a treatment technique has been set in place of an MCL).

[3] Preliminary analysis indicates that there may be an opportunity for improvement in public health protection if the PQL/MCL were lowered. Additional data are needed to support such a change.

[4] EPA plans to ask NAS to update the risk assessment for fluoride.

BILLING CODE 6560–50–C

A. What Preliminary Decisions Has EPA Made Regarding the Chemical NPDWRs?

1. Acrylamide

a. *Background.* EPA published the current NPDWR for acrylamide on January 30, 1991 (56 FR 3526 (USEPA, 1991a)). The NPDWR established an MCLG of zero based on a cancer classification of B2, probable human carcinogen. The NPDWR imposes a TT requirement that limits the allowable monomer levels in products used during drinking water treatment, storage, and distribution to 0.05 percent acrylamide in polyacrylamide coagulant aids dosed at 1 part per million (ppm). Each water system is required to certify, in writing, to the State (using third-party or manufacturer's certification) that the product used meets these residual monomers and use-level specifications.

b. *Technical Reviews.* EPA has initiated a reassessment of the health risks resulting from exposure to acrylamide. The revised risk assessment will consider relevant studies that have become available on the toxicity of

acrylamide including its potential developmental and reproductive toxicity. The Agency expects the new risk assessment to be completed in the 2004 or 2005 time frame (USEPA, 2002i).

c. *Preliminary Decision.* The Agency does not believe a revision to the NPDWR for acrylamide is appropriate at this time because a reassessment of the health risks resulting from exposure to acrylamide is ongoing.

2. Alachlor

a. *Background.* EPA published the current NPDWR for alachlor on January 30, 1991 (56 FR 3526 (USEPA, 1991a)). The NPDWR established an MCLG of zero based on a cancer classification of B2, probable human carcinogen. The NPDWR also established an MCL of 0.002 milligrams per liter (mg/L) based on analytical feasibility.

b. *Technical Reviews.* The Agency updated the health risk assessment for alachlor in 1998 as a part of the pesticides reregistration process (USEPA, 2002i). However, the Agency has initiated another update to the alachlor health risk assessment. The revised risk assessment will consider relevant studies that have become available on the toxicity of alachlor including its potential developmental and reproductive toxicity. The Agency expects the new risk assessment to be completed in the 2002 or 2003 time frame.

c. *Preliminary Decision.* The Agency does not believe a revision to the NPDWR for alachlor is appropriate at this time because a reassessment of the health risks resulting from exposure to alachlor is ongoing.

3. Antimony

a. *Background.* EPA published the current NPDWR for antimony on July 17, 1992 (57 FR 31776 (USEPA, 1992)). The NPDWR established an MCLG and an MCL of 0.006 mg/L. EPA based the MCLG on an RfD of 0.0004 milligrams per kilogram of body weight per day (mg/kg/day) and a cancer classification of D, not classifiable as to human carcinogenicity.

b. *Technical Reviews.* EPA has initiated a reassessment of the health risks resulting from exposure to antimony. The revised risk assessment will consider relevant studies that have become available on the toxicity of antimony including its potential developmental and reproductive toxicity. The Agency expects the new risk assessment to be completed in the 2002 or 2003 time frame (USEPA, 2002i).

c. *Preliminary Decision.* The Agency does not believe a revision to the NPDWR for antimony is appropriate at this time because a reassessment of the health risks resulting from exposure to antimony is ongoing.

4. *Asbestos*

a. *Background.* EPA published the current NPDWR for asbestos on January 30, 1991 (56 FR 3526 (USEPA, 1991a)). The NPDWR established an MCLG and an MCL of 7 million fibers per liter (MFL) for asbestos fibers exceeding 10 micrometers in length. EPA evaluated asbestos as a Category II [7] contaminant (equivalent to Group C, possible human carcinogen) by the oral route of exposure (see Appendix A of today's action for discussion of cancer classifications).

b. *Technical Reviews.* EPA has initiated a reassessment of the health risks resulting from exposure to asbestos. The new risk assessment will consider relevant studies that have become available on the toxicity of asbestos, including its potential developmental and reproductive toxicity. The Agency expects the new risk assessment to be completed in the 2004 or 2005 time frame (USEPA, 2002i).

c. *Preliminary Decision.* The Agency does not believe a revision to the NPDWR for asbestos is appropriate at this time because a reassessment of the health risks resulting from exposure to asbestos is ongoing.

5. Atrazine

a. *Background.* EPA published the current NPDWR for atrazine on January 30, 1991 (56 FR 3526 (USEPA, 1991a)). The NPDWR established an MCLG and an MCL of 0.003 mg/L. EPA based the MCLG on an RfD of 0.005 mg/kg/day and a cancer classification of Group C, possible human carcinogen, based on limited evidence of carcinogenicity in animals in the absence of human data. EPA published an FR notice in February 1999, in which EPA responded to recommendations by the Children's Health Advisory Committee, by committing to re-evaluate the MCL for atrazine after the Agency has finalized its risk assessment (64 FR 5277, February 3, 1999 (USEPA, 1999a)).

b. *Technical Reviews.* EPA has initiated a reassessment of the health risks resulting from exposure to atrazine. The revised risk assessment will consider relevant studies that have become available on the toxicity of atrazine including its potential developmental and neuroendocrine effects. The Agency expects the new risk assessment to be completed in the 2002 time frame. EPA is in the process of conducting an occurrence and exposure analysis.

c. *Preliminary Decision.* The Agency does not believe a revision to the NPDWR for atrazine is appropriate at this time because a reassessment of the health risks resulting from exposure to atrazine is ongoing. EPA has committed to revisiting the NPDWR for atrazine if a revision is appropriate once the results of the revised risk assessment become available. Therefore, EPA will revisit this ''not revise'' decision once the new risk assessment is completed.

6. Barium

a. *Background.* EPA published the current NPDWR for barium on July 1, 1991 (56 FR 30266 (USEPA, 1991c)). The NPDWR established an MCLG and an MCL of 2 mg/L. EPA based the MCLG on an RfD of 0.07 mg/kg/day and a cancer classification of D, not classifiable as to human carcinogenicity.

b. *Technical Reviews.* The Agency updated the health risk assessment for barium in 1998 and retained the RfD and cancer classification on which the 1991 MCLG is based (USEPA, 1999f). As a part of the 1998 assessment, EPA considered all relevant data on the toxicity of barium including developmental and reproductive toxicity.

A review of analytical or treatment feasibility is not necessary for barium because changes to the MCLG are not warranted at this time and the current MCL is set at the MCLG. In addition, the results of EPA's review of possible ''other regulatory revisions'' did not identify any barium-specific issues (USEPA, 2002e). Since EPA did not identify a health or technology basis for revising the barium NPDWR, the Agency did not conduct a detailed occurrence and exposure analysis.

c. *Preliminary Decision.* After reviewing the results of the pertinent technical analyses, the Agency believes the NPDWR for barium remains appropriate and thus, it is not subject to revision at this time.

[7] Category II contaminants include those contaminants for which EPA has determined there is limited evidence of carcinogenicity from drinking water considering weight of evidence, pharmacokinetics, potency, and exposure. For Category II contaminants, EPA has used two approaches to set the MCLG: Either (1) setting the MCLG based upon noncarcinogenic endpoints of toxicity (the RfD) then applying an additional risk management factor of 1 to 10; or (2) setting the MCLG based upon a theoretical lifetime excess cancer risk range of 10^{-5} to 10^{-6} using a conservative mathematical extrapolation model.

7. Benzene

a. *Background.* EPA published the current NPDWR for benzene on July 8, 1987 (52 FR 25690 (USEPA, 1987)). The NPDWR established an MCLG of zero based on a cancer classification of A, known human carcinogen. The NPDWR also established an MCL of 0.005 mg/L based on analytical feasibility.

b. *Technical Reviews.* The Agency updated the health risk assessment for benzene in 2000 and retained the cancer classification on which the 1987 zero MCLG is based (USEPA, 2000j; USEPA, 2002i). The revised risk assessment considered relevant studies on the toxicity of benzene including developmental and reproductive toxicity.

The current MCL for benzene is based on a PQL of 0.005 mg/L. As a part of the Six-Year Review, EPA analyzed more recent WS data to determine if it might be possible to recalculate the PQL (USEPA, 2002d). In addition, the Agency evaluated whether more sensitive analytical methods have been approved and put into use by a wide number of laboratories. The analysis of the WS data indicates that an improvement in analytical feasibility might exist. Evaluation of the WS data shows that EPA Regional and State laboratories exhibit greater than 95 percent laboratory passing rates at concentrations around the current PQL of 0.005 mg/L. Because most of the laboratory passing rates exceeded the 75 percent criterion typically used to derive a PQL from WS studies, this information indicates that a lower PQL corresponding to the 75 percent passing rate might exist for benzene. While this information is indicative of a possibly lower PQL, the WS data are insufficient at this time to actually recalculate what the lower PQL for benzene might be.

Using information about the analytical methods most widely used to report results in the WS studies, the MDLs for these methods, and the 10 times MDL multiplier, EPA estimated what the possibly lower PQL/MCL might be. For the analysis of benzene in the more recent WS studies, laboratories predominantly used EPA Method 524.2 (Gas Chromatography/Mass Spectrometry or GC/MS), which has an upper limit MDL of 0.00004 mg/L. A 10 times MDL multiplier predicts that the PQL could lie around 0.0004 mg/L. The 0.0004 mg/L value is used as a threshold in the occurrence analysis, which is discussed in this section.

Since the analytical feasibility analysis indicates that the PQL for benzene (and therefore the MCL) could possibly be lower if EPA had more definitive data to recalculate the PQL, EPA considered whether treatment feasibility is likely to pose any limitations (USEPA, 2002k). The current BATs for benzene are packed tower aeration (PTA) and granular activated carbon (GAC). Small system compliance technologies for benzene include GAC and several aeration technologies. EPA believes these BATs are still practical and would not pose any limitations for benzene at a possibly lower MCL.

The results of EPA's review of possible ''other regulatory revisions'' did not identify any benzene-specific issues (USEPA, 2002e).

EPA evaluated the results of the occurrence and exposure analyses for benzene to determine whether changes to the MCL might be appropriate and likely to result in additional public health protection if the PQL were recalculated (USEPA, 2002g; USEPA 2002h). Table V–2 shows the results of the detailed occurrence and exposure analysis based on the 16-State cross-section for the current MCL (0.005 mg/L) and the possible PQL/MCL based on the analytical feasibility analysis (0.0004 mg/L).

BILLING CODE 6560–50–P

Table V-2: Benzene Occurrence[1]

Systems[2]					
Threshold (in mg/L)		16 Cross-Section States - Total Systems with Data	Estimated # Systems > Threshold (credible intervals)[3, 5]		Estimated % Systems > Threshold (credible intervals)[3]	
Current MCL	0.005	23,266	7	(4 - 12)	0.0313%	(0.0172% - 0.0516%)
Possible PQL/MCL[4]	0.0004	23,266	80	(57 - 106)	0.343%	(0.245% - 0.456%)
Population Served by Systems[2]						
Threshold (in mg/L)		16 Cross-Section States - Total Population Served by Systems with Data	Estimated Population Served by Systems > Threshold (credible intervals)[3, 5]		Estimated % Population Served by Systems > Threshold (credible intervals)[3]	
Current MCL	0.005	110,866,600	10,500	(2,100 - 33,200)	0.00947%	(0.00188% - 0.0300%)
Possible PQL/MCL[4]	0.0004	110,866,600	342,500	(234,200 - 570,100)	0.309%	(0.211% - 0.514%)

Notes:

[1] Results are based on the number and percent of systems (and the corresponding population served by those systems) with estimated mean concentrations above the specified threshold.

[2] All percentages are shown to three significant figures. All system values are rounded to the nearest whole system. All population values are rounded to the nearest hundred.

[3] "Credible intervals" are generated to quantify the uncertainty around each estimated probability in the Bayesian analysis of the occurrence data. For further explanation of credible intervals and the Bayesian analysis, please see "Occurrence Estimation Methodology and Occurrence Findings Report for the Six-Year Regulatory Review" (USEPA, 2002g).

[4] The "possible PQL/MCL" is the possibly lower PQL/MCL as estimated by the analytical feasibility analysis.

[5] This value does not necessarily reflect the number of systems out of compliance with the current MCL, because these data were collected over the 1993 to 1997 time period, and because the value represents the estimated mean value over that time period, not the running quarterly average on which compliance is based.

BILLING CODE 6560–50–C

The results of the detailed occurrence and exposure analysis indicate that approximately 0.3 percent of the 23,266 systems sampled in the 16 cross-section States and approximately 0.3 percent of the population served by those systems, might be affected if EPA were to gather information to recalculate the PQL (to a lower PQL of around 0.0004 mg/L) and revise the MCL accordingly.

c. *Preliminary Decision.* Although there are new data that support consideration of a possibly lower PQL (and therefore a possibly lower MCL), EPA does not believe a revision to the NPDWR for benzene is appropriate at this time. The Agency does not have sufficient data at this time on which to base a PQL recalculation and hence an MCL revision. In addition, because the occurrence of benzene appears to be minimal between the current MCL and any likely PQL/MCL revision, the Agency believes that any potential revisions to the benzene NPDWR are unlikely to significantly improve the level of public health protection.

8. Benzo[a]pyrene

a. *Background.* EPA published the current NPDWR for benzo[a]pyrene on July 17, 1992 (57 FR 31776 (USEPA, 1992)). The NPDWR established an MCLG of zero based on a cancer classification of B2, probable human carcinogen. The NPDWR also established an MCL of 0.0002 mg/L based on analytical method feasibility.

b. *Technical Reviews.* EPA has initiated a reassessment of the health risks resulting from exposure to benzo[a]pyrene. The revised risk assessment will consider relevant studies that have become available on the toxicity of benzo[a]pyrene including its potential developmental and reproductive toxicity. The Agency expects the new risk assessment to be completed in the 2002 or 2003 time frame (USEPA, 2002i).

c. *Preliminary Decision.* The Agency does not believe a revision to the NPDWR for benzo[a]pyrene is appropriate at this time because a reassessment of the health risks resulting from exposure to benzo[a]pyrene is ongoing.

9. Beryllium

a. *Background.* EPA published the current NPDWR for beryllium on July 17, 1992 (57 FR 31776 (USEPA, 1992)). The NPDWR established an MCLG and an MCL of 0.004 mg/L. EPA classified beryllium in Group B2, probable human carcinogen, based on clear evidence of its carcinogenicity via inhalation or injection in several animal species. However, EPA also placed beryllium in drinking water Category II for regulation, based on the weight of evidence for carcinogenicity via ingestion, and the potency, exposure and pharmacokinetics of this chemical. EPA derived the MCLG by applying an additional risk management factor of 10

to the RfD of 0.005 mg/kg/day (57 FR 31776 at 31785, July 17, 1992 (USEPA, 1992)).

b. *Technical Reviews.* The Agency updated the health risk assessment of beryllium in 1998. The 1998 reassessment established a new RfD of 0.002 mg/kg/day and also considered relevant studies on the toxicity of beryllium including its developmental and reproductive toxicity. The 1998 assessment classified inhaled beryllium as a B1, probable human carcinogen, using the 1986 cancer guidelines (51 FR 33992, September 24, 1986 (USEPA, 1986b)). Using the 1996 Proposed Guidelines for Carcinogen Risk Assessment, the 1998 assessment characterized inhaled beryllium as a ''likely'' carcinogen in humans and concluded that the human carcinogenic potential of ingested beryllium could not be determined (61 FR 17960, April 23, 1996 (USEPA, 1996; USEPA, 1998d)). On this basis, EPA will re-examine the application of the additional risk management factor of 10 to account for potential carcinogenicity of beryllium via ingestion that was used when deriving the current MCLG, if the Agency determines that an MCLG revision is appropriate.

EPA believes that any likely revision to the MCLG for beryllium could range from 0.01 mg/L to 0.001 mg/L, based on the change in the RfD in the 1998 assessment, the inclusion or non-inclusion of the risk management factor, and using a 20 percent relative source contribution (RSC).[8] Whereas the 0.01 mg/L value assumes no adjustment for potential carcinogenicity via oral ingestion (i.e., no 10-fold risk management factor), the 0.001 mg/L value retains the current risk management factor of 10.

Because of changes in the health risk assessment for beryllium, EPA considered whether analytical feasibility is likely to be a limitation if the Agency were to lower the MCLG/MCL. The results of the analytical feasibility analyses indicate that the current PQL of 0.001 mg/L for beryllium is still appropriate and is unlikely to change. Therefore, the Agency believes the PQL is unlikely to be a limiting factor if EPA decides to lower the MCLG/MCL (USEPA, 2002d).

EPA also considered whether treatment feasibility is likely to pose any limitations if EPA were to lower the MCLG/MCL. The current BATs for beryllium include activated alumina (AA), ion exchange, lime softening, coagulation/filtration, and reverse osmosis (RO) with removal efficiencies ranging from 80 to 99 percent. Small system compliance technologies also include point-of-use (POU) RO and POU ion exchange. The Agency believes these BATs are still practical and would not pose any limitations if the Agency were to lower the MCLG/MCL (USEPA, 2002k).

The results of EPA's review of possible ''other regulatory revisions'' did not identify any issues which are specific to beryllium (USEPA, 2002e).

EPA evaluated the results of the occurrence and exposure analyses for beryllium to determine whether possible changes to the MCLG/MCL would be likely to result in additional public health protection or an opportunity for significant cost savings to PWSs and their customers (USEPA, 2002g; USEPA, 2002h). Table V–3 shows the results of the detailed occurrence and exposure analysis based on the 16-State cross-section at the current MCL (0.004 mg/L), the possible lower level of any MCLG/MCL value (0.001 mg/L), and the possible upper level of any MCLG/MCL value (0.01 mg/L).

BILLING CODE 6560–50–P

[8] This is the RSC used for the current MCLG and also the default value. EPA has no reason to believe that the RSC for beryllium would change. See Appendix A for a further discussion of the RSC.

Table V-3: Beryllium Occurrence[1]

Systems[2]					
Threshold (in mg/L)		**16 Cross-Section States - Total Systems with Data**	**Estimated # Systems > Threshold (credible intervals)[3, 5]**		**Estimated % Systems > Threshold (credible intervals)[3]**	
Possible upper level of any MCLG/MCL value[4]	0.01	18,933	2	(0 - 4)	0.00809%	(0.000% - 0.0211%)
Current MCL	0.004	18,933	15	(7 -24)	0.0781%	(0.0370% - 0.127%)
Possible lower level of any MCLG/MCL value[4]	0.001	18,933	203	(167 -237)	1.07%	(0.882% - 1.25%)
Population Served by Systems[2]						
Threshold (in mg/L)		**16 Cross-Section States - Total Population Served by Systems with Data**	**Estimated Population Served by Systems > Threshold (credible intervals)[3, 5]**		**Estimated % Population Served by Systems > Threshold (credible intervals)[3]**	
Possible upper level of any MCLG/MCL value[4]	0.01	104,573,700	2,000	(0 - 13,400)	0.00190%	(0.000% - 0.0128%)
Current MCL	0.004	104,573,700	21,800	(2,900 - 81,700)	0.0208%	(0.00278% - 0.0781%)
Possible lower level of any MCLG/MCL value[4]	0.001	104,573,700	731,300	(372,400 - 1,237,100)	0.699%	(0.356% - 1.18%)

[1] Results are based on the number and percent of systems (and the corresponding population served by those systems) with estimated mean concentrations above the specified threshold.

[2] All percentages are shown to three significant figures. All system values are rounded to the nearest whole system. All population values are rounded to the nearest hundred.

[3] "Credible intervals" are generated to quantify the uncertainty around each estimated probability in the Bayesian analysis of the occurrence data. For further explanation of credible intervals and the Bayesian analysis, please see "Occurrence Estimation Methodology and Occurrence Findings Report for the Six-Year Regulatory Review" (USEPA, 2002g).

[4] These are possible upper and lower MCLG/MCL values based on the change in the RfD, using a 20 percent RSC and whether or not to consider the risk management factor of 10. The upper level MCLG/MCL value was calculated without applying the 10-fold risk management factor, whereas the lower level was calculated using the 10-fold risk management factor.

[5] This value does not necessarily reflect the number of systems out of compliance with the current MCL, because these data were collected over the 1993 to 1997 time period, and because the value represents the estimated mean value over that time period, not the running quarterly average on which compliance is based.

BILLING CODE 6560–50–C

The results of the detailed occurrence and exposure analysis indicate that approximately 0.07 percent of the 18,933 systems sampled in the 16 cross-section States, and approximately 0.02 percent of the population served by those systems, might be affected if EPA were to raise the MCLG/MCL. The current BATs and small system compliance technology for beryllium also apply to other contaminants. In addition to the removal of beryllium, these treatment technologies have other beneficial effects (e.g., reduction of hardness or other common impurities) (USEPA, 2002k). Therefore, if EPA were to raise the MCLG/MCL, the Agency does not know how many of these PWSs currently treating to comply with the current MCL of 0.004 mg/L would discontinue any treatment that is already in place. If, on the other hand, EPA were to retain the risk management factor and lower the MCLG/MCL, less than 1 percent of the 18,933 systems sampled in the 16 cross-section States and less than 0.7 percent of the population served by those systems might be affected.

c. *Preliminary Decision.* Although there are new data indicating that it might be possible to revise the MCLG/MCL for beryllium, EPA does not

believe a revision to the NPDWR for beryllium, either higher or lower, is appropriate at this time. The Agency believes that any change in the MCLG/MCL would be unlikely to significantly improve the level of public health protection (if EPA were to lower the MCLG/MCL) or provide an opportunity for significant cost savings to PWSs (if EPA were to raise the MCLG/MCL).

10. Cadmium

a. *Background.* EPA published the current NPDWR for cadmium on January 30, 1991 (56 FR 3526 (USEPA, 1991a)). The NPDWR established an MCLG and an MCL of 0.005 mg/L. Because of inadequate dose-response data to characterize the presence or lack of a carcinogenic hazard from oral exposure, the Agency regulated cadmium as a Group D carcinogen, not classifiable as to human carcinogenicity by the oral route of exposure. Therefore, EPA developed the MCLG for cadmium based on the RfD of 0.0005 mg/kg/day.

b. *Technical Reviews.* EPA has initiated a reassessment of the health risks resulting from exposure to cadmium. The revised risk assessment will consider relevant studies that have become available on the toxicity of cadmium including its potential developmental and reproductive toxicity. The Agency expects the new risk assessment to be completed in the 2002 or 2003 time frame (USEPA, 2002i).

c. *Preliminary Decision.* The Agency does not believe a revision to the NPDWR for cadmium is appropriate at this time because a reassessment of the health risks resulting from exposure to cadmium is ongoing.

11. Carbofuran

a. *Background.* EPA published the current NPDWR for carbofuran on January 30, 1991 (56 FR 3526 (USEPA, 1991a)). The NPDWR established an MCLG and an MCL of 0.04 mg/L. EPA based the MCLG on an RfD of 0.005 mg/kg/day and a cancer classification of E, evidence of non-carcinogenicity for humans.

b. *Technical Reviews.* EPA has initiated a reassessment of the health risks resulting from exposure to carbofuran. The revised risk assessment will consider relevant studies on the toxicity of carbofuran including recent data on neurotoxicity and potential developmental and reproductive toxicity. The Agency expects the new risk assessment to be completed in the 2002 or 2003 time frame (USEPA, 2002i).

c. *Preliminary Decision.* The Agency does not believe a revision to the NPDWR for carbofuran is appropriate at this time because a reassessment of the health risks resulting from exposure to carbofuran is ongoing.

12. Carbon Tetrachloride

a. *Background.* EPA published the current MCLG for carbon tetrachloride on July 8, 1987 (52 FR 25690 (USEPA, 1987)). The NPDWR established an MCLG of zero based on a cancer classification of B2, probable human carcinogen. The NPDWR also established an MCL of 0.005 mg/L based on analytical feasibility.

b. *Technical Reviews.* EPA has initiated a reassessment of the health risks resulting from exposure to carbon tetrachloride. The revised risk assessment will consider relevant studies that have become available on the toxicity of carbon tetrachloride including its potential developmental and reproductive toxicity. The Agency expects the new risk assessment to be completed in the 2002 or 2003 time frame (USEPA, 2002i).

c. *Preliminary Decision.* The Agency does not believe a revision to the NPDWR for carbon tetrachloride is appropriate at this time because a reassessment of the health risks resulting from exposure to carbon tetrachloride is ongoing.

13. Chlordane

a. *Background.* EPA published the current NPDWR for chlordane on January 30, 1991 (56 FR 3526 (USEPA, 1991a)). The NPDWR established an MCLG of zero based on a cancer classification of B2, probable human carcinogen. The NPDWR also established an MCL of 0.002 mg/L based on analytical feasibility.

b. *Technical Reviews.* EPA updated its risk assessment for chlordane in 1998 (USEPA, 1998e). That assessment included an evaluation of developmental and reproductive endpoints. The assessment also retained the B2 cancer classification, concluding that chlordane is a probable human carcinogen using the 1986 EPA Guidelines for Carcinogen Risk Assessment (51 FR 33992, September 24, 1986 (USEPA, 1986b)). Under the 1996 Proposed Guidelines for Carcinogen Risk Assessment (61 FR 17960, April 23, 1996 (USEPA, 1996)), chlordane is characterized as a likely carcinogen by all routes of exposure and, at the present time, would require quantification using a linear dose response, thus, the MCLG of zero remains appropriate.

EPA based the current MCL for chlordane on a PQL of 0.002 mg/L. As a part of the Six-Year Review, EPA analyzed more recent WS data to determine if it might be possible to recalculate the PQL (USEPA, 2002d). In addition, the Agency evaluated whether more sensitive analytical methods have been approved and put into use by a wide number of laboratories. The results of these analyses indicate that only a slight improvement in analytical feasibility might exist. Evaluation of the WS data shows that EPA Regional and State laboratories exhibit greater than 85 percent laboratory passing rates at concentrations around the current PQL of 0.002 mg/L. Because most of the laboratory passing rates exceeded the 75 percent criterion typically used to derive a PQL from WS studies, this information indicates that a lower PQL corresponding to the 75 percent passing rate might exist for chlordane. While this information is indicative of a possibly lower PQL, the WS data are insufficient at this time to actually recalculate what the lower PQL for chlordane might be.

Using information about the analytical methods most widely used to report results in the WS studies, the MDLs for these methods, and the 10 times MDL multiplier, EPA estimated what the possibly lower PQL/MCL might be. For the analysis of chlordane in the more recent WS studies, laboratories predominantly used EPA Methods 505 (Gas Chromatography with microextraction) and 508 (Gas Chromatography with Electron Capture Detector), which have MDLs of 0.00014 mg/L and 0.0000041 mg/L, respectively. A 10 times MDL multiplier predicts that the PQL could range from 0.0014 mg/L to 0.000041 mg/L. EPA averaged these two values, rounded up to 0.001 mg/L, and used this value as a threshold in the occurrence analysis discussed in this section.

Since the analytical feasibility analysis indicates that the PQL for chlordane (and therefore the MCL) could possibly be lower if EPA had more definitive data to recalculate the PQL, EPA considered whether treatment feasibility is likely to pose any limitations (USEPA, 2002k). The current BAT for chlordane is GAC. Small system compliance technologies for chlordane include GAC, POU GAC, and powdered activated carbon (PAC). Because chlordane is a moderately adsorbed pesticide, EPA believes that GAC is still a practical treatment and would not pose any limitations for chlordane at a possibly lower MCL.

The results of EPA's review of possible ''other regulatory revisions'' did not identify any issues which are specific to chlordane (USEPA, 2002e).

EPA evaluated the results of the occurrence and exposure analyses for chlordane to determine whether changes to the MCL might be appropriate and likely to result in additional public health protection if the PQL were recalculated (USEPA, 2002g; USEPA, 2002h). Table V–4 shows the results of the detailed occurrence and exposure analysis based on the 16-State cross-section for the current MCL (0.002 mg/L) and the possible PQL/MCL based on the analytical feasibility analysis (0.001 mg/L).

BILLING CODE 6560–50–P

Table V-4: Chlordane Occurrence[1]

Systems[2]					
Threshold (in mg/L)		**16 Cross-Section States - Total Systems with Data**	**Estimated # Systems > Threshold (credible intervals)[3]**		**Estimated % Systems > Threshold (credible intervals)[3]**	
Current MCL	0.002	13,184	0	(0 - 0)	0.000%	(0.000% - 0.000%)
Possible PQL/MCL[4]	0.001	13,184	0	(0 - 0)	0.0000910%	(0.000% - 0.000%)
Population Served by Systems[2]						
Threshold (in mg/L)		**16 Cross-Section States - Total Population Served by Systems with Data**	**Estimated Population Served by Systems > Threshold (credible intervals)[3]**		**Estimated % Population Served by Systems > Threshold (credible intervals)[3]**	
Current MCL	0.002	97,459,900	0	(0 - 0)	0.000%	(0.000% - 0.000%)
Possible PQL/MCL[4]	0.001	97,459,900	0	(0 - 0)	0.00000146%	(0.000% - 0.000%)

Notes:

[1] Results are based on the number and percent of systems (and the corresponding population served by those systems) with estimated mean concentrations above the specified threshold.

[2] All percentages are shown to three significant figures. All system values are rounded to the nearest whole system. All population values are rounded to the nearest hundred.

[3] "Credible intervals" are generated to quantify the uncertainty around each estimated probability in the Bayesian analysis of the occurrence data. For further explanation of credible intervals and the Bayesian analysis, please see "Occurrence Estimation Methodology and Occurrence Findings Report for the Six-Year Regulatory Review" (USEPA, 2002g).

[4] The "possible PQL/MCL" is the possibly lower PQL/MCL as estimated by the analytical feasibility analysis.

BILLING CODE 6560–50–C

The detailed occurrence and exposure analysis indicates that chlordane is unlikely to occur at the current MCL or any potential MCL revision for the States used in the cross-section. Since chlordane uses were canceled in the United States in 1988 and since it is subject to the United Nations Prior Informed Consent procedure (USEPA, 2002g; USEPA, 2002h), EPA expects the occurrence of chlordane in PWSs to be rare.

c. *Preliminary Decision.* Although there are new data that support consideration of a slightly lower PQL (and therefore a possibly lower MCL), EPA does not believe a revision to the NPDWR for chlordane is appropriate at this time. The Agency does not have sufficient data at this time on which to base a PQL recalculation and hence an MCL revision. Also, the Agency believes that any change in the PQL would be minimal and unlikely to significantly improve the level of public health protection because chlordane appears to occur infrequently at concentrations at or below the current MCL.

14. Chromium

a. *Background.* EPA published the current NPDWR for total chromium on January 31, 1991 (56 FR 3526 (USEPA, 1991a)). The NPDWR established an MCLG and MCL of 0.1 mg/L. Although the NPDWR regulates total chromium, the adverse health effects associated with hexavalent chromium (chromium VI) are the basis of the current MCLG since that is the more toxic species (56 FR 3526, January 31, 1991 (USEPA, 1991a)). EPA based the MCLG on an RfD of 0.005 mg/kg/day and an assumed RSC from water of 70 percent for total chromium (refer to Appendix A for a description of the RSC). EPA regulated chromium as a Group D carcinogen, not classifiable as to human carcinogenicity by the oral route of exposure.

b. *Technical Reviews.* The Agency updated the risk assessment for chromium in 1998 (USEPA, 1998f). The revised risk assessment considered relevant studies that were available on the toxicity of chromium including potential developmental and reproductive toxicity. Based on the revised risk assessment, EPA has identified changes in the health risk assessment that support consideration of whether it may be appropriate to revise the MCLG and MCL (USEPA, 2002i). The 1998 assessment revised the RfD for hexavalent chromium (chromium VI) from 0.005 mg/kg/day to

0.003 mg/kg/day based on a modification to the original uncertainty factor and the addition of a modifying factor because of data on the potential for gastrointestinal effects in humans as a result of oral exposures. The critical study used as the basis for the RfD did not change.

The 1998 assessment of chromium VI made no change to the cancer classification of Group D for oral exposures and determined that the carcinogenicity of chromium VI cannot be determined because of a lack of sufficient epidemiological or toxicological studies under the 1996 Proposed Guidelines for Carcinogen Risk Assessment. Chromium VI is a Group A known human carcinogen by the inhalation route of exposure.

Public concern over the adverse health effects of chromium VI has increased in recent years. One issue is whether chromium VI is a human carcinogen through oral ingestion. In 2001, the State of California convened a Blue Ribbon Panel to evaluate the available data on this issue. The Panel issued its report in August 2001 (Flegal *et al.,* 2001) and found no basis in either the epidemiological or animal data published in the literature for concluding that orally ingested chromium VI is a carcinogen. The National Toxicology Program (NTP) has agreed to study the chronic toxicity and carcinogenicity of chromium VI after oral exposure. That effort will include shorter-term toxicity studies, two-year rodent toxicity and carcinogenicity studies as well as bioavailability, distribution, and mechanistic studies. NTP expects the results to be available in the next three to five years (NTP, 2001).

The availability of new data on the contribution of dietary chromium to total chromium exposure supports a re-evaluation of the RSC (NAS, 2001). The Agency applied an RSC of 70 percent in determining the current MCLG. Using the new Agency RfD of 0.003 mg/kg/day along with the application of 20 percent, 50 percent, or 70 percent as RSC values, the Agency believes that any likely revisions to the MCLG could range from 0.02 mg/L to 0.07 mg/L. A general evaluation of the data indicates that a revised RSC would likely fall within the 20 percent to 50 percent range.

Because the results of the health effects review support consideration of whether it may be appropriate to revise the NPDWR for chromium based on changes in the RfD and possible changes in the RSC assumptions, EPA considered whether analytical feasibility is likely to be a limitation. The results of the analytical feasibility analyses indicate that the current PQL of 0.01 mg/L for chromium is still appropriate and is unlikely to change. Therefore, the Agency believes the PQL is unlikely to be a limiting factor if EPA decides to revise the MCLG/MCL (USEPA, 2002d).

EPA also considered whether treatment feasibility is likely to pose any limitations if EPA were to revise the MCLG/MCL. The current BATs for chromium include ion exchange, lime softening, coagulation/filtration, and RO. Small system compliance technologies also include POU RO and POU ion exchange. At the present time, EPA believes these BATs are still practical and would not pose any limitations if the Agency were to revise the MCLG/MCL (USEPA, 2002k).

The results of EPA's review of possible ''other regulatory revisions'' did not identify any issues which are specific to chromium (USEPA, 2002e).

EPA evaluated the results of the occurrence and exposure analyses for chromium to determine whether a revised MCLG/MCL would be likely to result in additional public health protection (USEPA, 2002g; USEPA, 2002h). Table V–5 shows the results of the detailed occurrence and exposure analysis based on the 16-State cross-section for the current MCLG/MCL (0.1 mg/L), the possible MCLG/MCL value retaining the 70 percent RSC (0.07 mg/L), the possible MCLG/MCL value using a 50 percent RSC (0.05 mg/L), and the possible MCLG/MCL value using a 20 percent RSC (0.02 mg/L).

BILLING CODE 6560–50–P

Table V-5: Chromium Occurrence[1]

Systems[2]					
Threshold (in mg/L)		**16 Cross-Section States - Total Systems with Data**	**Estimated # Systems > Threshold (credible intervals)[3, 5]**		**Estimated % Systems > Threshold (credible intervals)[3]**	
Current MCL	0.1	19,695	1	(0 - 3)	0.00424%	(0.000% - 0.0152)
Possible MCLG/MCL value retaining the 70% RSC[4]	0.07	19,695	3	(0 - 7)	0.0133%	(0.000% - 0.0355%)
Possible MCLG/MCL value using a 50% RSC[4]	0.05	19,695	7	(3 - 13)	0.0366%	(0.0152% - 0.0660%)
Possible MCLG/MCL value using a 20% RSC[4]	0.02	19,695	73	(54 - 92)	0.371%	(0.274% - 0.467%)
Population Served by Systems[2]						
Threshold (in mg/L)		**16 Cross-Section States - Total Population Served by Systems with Data**	**Estimated Population Served by Systems > Threshold (credible intervals)[3, 5]**		**Estimated % Population Served by Systems > Threshold (credible intervals)[3]**	
Current MCL	0.1	105,380,000	1,500	(0 - 8,400)	0.00139%	(0.000% - 0.00793%)
Possible MCLG/MCL value retaining the 70% RSC[4]	0.07	105,380,000	4,500	(0 - 50,600)	0.00427%	(0.000% - 0.0481%)
Possible MCLG/MCL value using a 50% RSC[4]	0.05	105,380,000	11,300	(600 - 58,900)	0.0108%	(0.000580% - 0.0559%)
Possible MCLG/MCL value using a 20% RSC[4]	0.02	105,380,000	106,600	(47,100 - 167,700)	0.101%	(0.0447% - 0.159%)

Notes:

[1] Results are based on the number and percent of systems (and the corresponding population served by those systems) with estimated mean concentrations above the specified threshold.

[2] All percentages are shown to three significant figures. All system values are rounded to the nearest whole system. All population values are rounded to the nearest hundred.

[3] "Credible intervals" are generated to quantify the uncertainty around each estimated probability in the Bayesian analysis of the occurrence data. For further explanation of credible intervals and the Bayesian analysis, please see "Occurrence Estimation Methodology and Occurrence Findings Report for the Six-Year Regulatory Review" (USEPA, 2002g).

[4] These are possible MCLG/MCL values based on changes in the RfD and using RSC values of 70, 50, and 20 percent.

[5] This value does not necessarily reflect the number of systems out of compliance with the current MCL, because these data were collected over the 1993 to 1997 time period, and because the value represents the estimated mean value over that time period, not the running quarterly average on which compliance is based.

BILLING CODE 6560–50–C

The results of detailed occurrence and exposure analysis indicate that less than 0.4 percent of the 19,695 systems sampled in the 16 cross-section States and approximately 0.1 percent of the population served by those systems, might be affected if EPA were to lower the MCL to 0.02 mg/L.

c. *Preliminary Decision.* Although EPA has identified a change to the RfD on which the current MCLG for chromium is based, the Agency believes that a decision to revise the chromium NPDWR at this time is premature in light of the ongoing NTP studies on the toxicology and carcinogenicity of hexavalent chromium. The Agency is aware of considerable public controversy on the subject of the appropriate level for chromium in drinking water and realizes there are differing views regarding the severity of the health effects of chromium in water, the relative importance of drinking water as a source of chromium as compared with other sources, and the chemical form that should serve as the basis for regulating chromium (total versus hexavalent chromium). Because the NTP studies will not be available in time for the final revise/not revise decision, EPA is placing chromium in the ''not revise—data gap'' category. When completed, the NTP results will be considered either in the next review round or sooner, if the Agency deems it appropriate.

15. Copper

a. *Background.* EPA published the current NPDWR for copper on June 7, 1991 (56 FR 26460 (USEPA, 1991b)). The NPDWR established an MCLG of 1.3 mg/L, based on a lowest-observed-adverse-effect level (LOAEL) of 5.3 mg/day [9], and an action level of 1.3 mg/L for first-draw samples at the 90th percentile of taps tested. The NPDWR requires water systems to monitor for copper at the tap. Water systems must optimize corrosion control. This requires water systems serving more than 50,000 persons and those smaller size systems that exceed the copper action level to install corrosion control treatment and to monitor for specified water quality control parameters. The regulation also requires any size system that exceeds the copper action level to monitor for copper in source water and, if appropriate, to install source water treatment. EPA published revisions to the copper NPDWR on January 12, 2000 (65 FR 1950 (USEPA, 2000a)). These revisions made changes to monitoring and reporting requirements but did not affect the copper MCLG, action level, or basic TT requirements.

b. *Technical Reviews.* In 1999, EPA requested that the National Research Council (NRC) of the NAS examine the available nutritional and toxicological data for copper and provide a recommendation regarding the levels in drinking water that are associated with adverse effects. The NRC concluded that copper in drinking water could produce adverse gastrointestinal effects in some individuals at concentrations of about 3 mg/L or greater. In addition, the NRC advised that individuals who carry a recessive gene for Wilson's disease could accumulate excess copper in their livers at these same concentrations. Accordingly, the NAS recommended that EPA retain the MCLG of 1.3 mg/L while additional data are collected on the risk to the carriers of the Wilson's Disease gene and other populations that may accumulate copper in their livers (NAS, 2000a).

EPA has initiated an assessment of health risks resulting from exposure to copper that will include the findings of NAS as well as more recently published data (USEPA, 2002i). This assessment will consider relevant studies on the toxicity of copper including its effects on genetically and developmentally sensitive populations. The Agency expects the new risk assessment to be completed in the 2002 or 2003 time frame (USEPA, 2002i).

EPA has received comments on the copper NPDWR suggesting that EPA discontinue copper as a regulated contaminant or change it to a secondary standard (USEPA, 2002e). EPA is not aware of any new information that would warrant such a revision.

EPA has identified several potential research needs which may be considered in the context of an overall drinking water research strategy. These research needs are described in the ''Water Treatment Technology Feasibility Support Document for Chemical Contaminants; In Support of EPA Six-Year Review of National Primary Drinking Water Regulations'' (USEPA, 2002k).

c. *Preliminary Decision.* The Agency does not believe a revision to the NPDWR for copper is appropriate at this time because a reassessment of the health risks resulting from exposure to copper is ongoing. Several potential research needs were identified for copper. The NAS review of copper in drinking water concluded that there was a need to conduct research that would characterize copper-sensitive populations (both population size and the factors leading to sensitivity) and further define the contribution of copper from drinking water to total copper intake (NAS, 2000a). Treatment-related research needs for copper are described in the Six-Year Review treatment feasibility support document (USEPA, 2002k).

16. Cyanide

a. *Background.* EPA published the current NPDWR for cyanide on July 17, 1992 (57 FR 31776 (USEPA, 1992)). The NPDWR established an MCLG and MCL of 0.2 mg/L. The MCLG was developed based on an RfD of 0.02 mg/kg/day and a cancer classification of D, not classifiable as to human carcinogenicity.

b. *Technical Reviews.* The results of the health effects technical review identified some information on reproductive effects from the ATSDR toxicological profile that indicate the need to update the Agency's risk assessment for cyanide (USEPA, 2002i). In light of this information, EPA has initiated a reassessment of the health risks resulting from exposure to cyanide and has already solicited scientific information from the public for consideration (67 FR 1212, January 9, 2002 (USEPA, 2002a)). The new risk assessment will consider relevant data on the toxicity of cyanide including its potential developmental and reproductive toxicity. Because the new assessment is not expected to be completed until the 2004 or 2005 time frame, EPA does not believe it is appropriate to revise the MCLG at this time.

A review of analytical or treatment feasibility is not necessary for cyanide because changes to the MCLG are not warranted at this time and the current MCL is set at the MCLG. EPA's review of ''other regulatory revisions'' identified a potential revision relating to an error in the BAT specified for cyanide in the CFR (USEPA, 2002e). The CFR currently specifies ''chlorine'' as a BAT for cyanide for compliance with the MCL and with variance and exemption requirements (40 CFR 141.62 and 142.62, respectively); however, the CFR should specify ''alkaline chlorination'', as BAT. EPA plans to correct this error through a technical amendment to the cyanide NPDWR in the near future. In the meantime, water systems and States should continue to be guided by the ''Public Water System Warning: Cyanide'' (USEPA, 1994a) that EPA distributed through its regional offices. The warning includes information on the use of chlorination (non-alkaline) and the potential for formation of harmful cyanogen chloride due to reaction of chlorine with cyanide

[9] In June 1994, EPA published a technical amendment that provided additional information on the basis of the copper MCLG (59 FR 33860, June 30, 1994 (USEPA, 1994b)).

in water under those conditions. The PWS Warning explains this process in detail and outlines treatment practice, including contact times, required chlorine concentrations, and compensation for temperature effects. The July 25, 1990 proposed regulation for cyanide discusses the effectiveness of oxidation of cyanide at high pH levels (55 FR 30370 at 30419 (USEPA, 1990)) and the PWS Warning discusses mitigation of the formation of cyanogen chloride. This information is also summarized in the six-year review treatment technology support document (USEPA, 2002k).

Since the potential regulatory revision identified by these analyses does not affect the MCLG or the MCL, EPA does not believe it is necessary to conduct a detailed occurrence and exposure analysis for cyanide.

c. *Preliminary Decision.* Other than the technical amendment to correct the BAT, EPA does not believe a revision to the NPDWR for cyanide is appropriate at this time. A reassessment of the health risks has been initiated and the Agency does not believe it is appropriate to revise the NPDWR while that effort is in process.

17. 2,4-D (2,4-Dichlorophenoxyacetic Acid)

a. *Background.* EPA published the NPDWR for 2,4-D on January 30, 1991 (56 FR 3526 (USEPA, 1991a)). The NPDWR established an MCLG and an MCL of 0.07 mg/L. EPA developed the MCLG based on a RfD of 0.01 mg/kg/day and a cancer classification of D, not classifiable as to human carcinogenicity.

b. *Technical Reviews.* EPA has initiated a reassessment of the health risks resulting from exposure to 2,4-D. The revised risk assessment will consider relevant studies that have become available on the toxicity of 2,4-D including its potential developmental and reproductive toxicity. EPA expects the new risk assessment to be completed in the 2003 or 2004 time frame (USEPA, 2002i).

c. *Preliminary Decision.* The Agency does not believe a revision to the NPDWR for 2,4-D is appropriate at this time because a reassessment of the health risks resulting from exposure to 2,4-D is ongoing.

18. Dalapon (2,2-Dichloropropionic Acid)

a. *Background.* EPA published the current NPDWR for dalapon on July 17, 1992 (57 FR 31776 (USEPA, 1992)). The NPDWR established an MCLG and an MCL of 0.2 mg/L. EPA developed the MCLG based on an RfD of 0.03 mg/kg/day and a cancer classification of D, not classifiable as to human carcinogenicity.

b. *Technical Reviews.* The Agency has not updated the health risk assessment for dalapon since the NPDWR was published. Therefore, as part of the Six-Year Review process, EPA conducted a literature search for relevant data on the toxicology of dalapon, including its potential developmental and reproductive toxicity. The literature search did not identify any studies that warrant a review of the RfD or the cancer classification (USEPA, 2002i).

A review of analytical or treatment feasibility is not necessary for dalapon because changes to the MCLG are not warranted at this time and the current MCL is set at the MCLG. In addition, the results of EPA's review of possible ''other regulatory revisions'' did not identify any dalapon-specific issues (USEPA, 2002e). Since EPA did not identify a health or technology basis for revising the dalapon NPDWR, the Agency did not conduct a detailed occurrence and exposure analysis.

c. *Preliminary Decision.* After reviewing the results of the pertinent technical analyses, the Agency believes the NPDWR for dalapon remains appropriate and thus, it is not subject to revision at this time.

19. 1,2-Dibromo-3-chloropropane (DBCP)

a. *Background.* EPA published the current NPDWR for DBCP on January 30, 1991 (56 FR 3526 (USEPA, 1991a)). The NPDWR established an MCLG of zero based on a cancer classification of B2, probable human carcinogen. The NPDWR also established an MCL of 0.0002 mg/L based on analytical feasibility.

b. *Technical Reviews.* The Agency has not updated the health risk assessment for DBCP since the NPDWR was published; however, ATSDR completed a toxicological profile for DBCP in 1992 (ATSDR, 1992). This assessment and other recent information do not warrant a review of the cancer classification because there are inadequate data to support a nonlinear dose response relationship (USEPA, 2002i). Accordingly, the MCLG remains at zero and the Agency believes that a further review of the health effects of DBCP is not warranted at this time.

EPA based the current MCL for DBCP on a PQL of 0.0002 mg/L. As a part of the Six-Year Review, EPA analyzed more recent WS data to determine if it might be possible to recalculate the PQL (USEPA, 2002d). In addition, the Agency evaluated whether more sensitive analytical methods have been approved and put into use by a wide number of laboratories. The results of these analyses indicate that a slight improvement in analytical feasibility might exist. Evaluation of the WS data shows that EPA Regional and State laboratories exhibit greater than 85 percent laboratory passing rates at concentrations around the current PQL of 0.0002 mg/L. Because most of the laboratory passing rates exceeded the 75 percent criterion typically used to derive a PQL from WS studies, this information indicates that a lower PQL corresponding to the 75 percent passing rate might exist for DBCP. While this information is indicative of a possibly lower PQL, the WS data are insufficient at this time to actually recalculate what the lower PQL for DBCP might be.

Using information about the analytical methods most widely used to report results in the WS studies, the MDLs for these methods, and the 10 times MDL multiplier, EPA estimated what the possibly lower PQL/MCL might be. For the analysis of DBCP in the more recent WS studies, laboratories predominantly used EPA Method 504.1 (Gas Chromatography with microextraction), which has an MDL of 0.00001 mg/L. A 10 times MDL multiplier predicts that the PQL may be around 0.0001 mg/L (also one-half the current MCL). The 0.0001 mg/L value is used as a threshold in the occurrence analysis, which is discussed in this section.

Since the analytical feasibility analysis indicates that the PQL for DBCP (and therefore the MCL) could possibly be lower if EPA had more definitive data to recalculate the PQL, EPA considered whether treatment feasibility is likely to pose any limitations (USEPA, 2002k). The BATs for DBCP include aeration and GAC. Small system compliance technologies for DBCP include GAC, POU GAC, PAC, and several aeration technologies. Since the Henry's Law coefficient for DBCP is relatively low (i.e., DBCP is ''less strippable'' than other contaminants), GAC may in some cases be the preferred treatment. Considering that only a slight improvement in analytical feasibility may exist, EPA believes that these BATs are still practical and would not pose any limitations for DBCP at a possibly lower MCL.

The results of EPA's review of possible ''other regulatory revisions'' did not identify any issues which are specific to DBCP (USEPA, 2002e).

EPA evaluated the results of the detailed occurrence and exposure analyses for DBCP to determine whether changes to the MCL might be appropriate and likely to result in additional public health protection if

the PQL were recalculated (USEPA, 2002g; USEPA, 2002h). Table V–6 shows the results of the detailed occurrence and exposure analysis based on the 16-State cross-section at the current MCL (0.0002 mg/L) and the possible PQL/MCL based on the analytical feasibility analysis (0.0001 mg/L).

BILLING CODE 6560–50–P

Table V-6: 1,2-Dibromo-3-chloropropane Occurrence[1]

Systems[2]					
Threshold (in mg/L)		16 Cross-Section States - Total Systems with Data	Estimated # Systems > Threshold (credible intervals)[3,5]		Estimated % Systems > Threshold (credible intervals)[3]	
Current MCL	0.0002	14,042	199	(171 - 231)	1.41%	(1.22% - 1.65%)
Possible PQL/MCL[4]	0.0001	14,042	273	(238 -310)	1.94%	(1.70% - 2.21%)
Population Served by Systems[2]						
Threshold (in mg/L)		16 Cross-Section States - Total Population Served by Systems with Data	Estimated Population Served by Systems > Threshold (credible intervals)[3]		Estimated % Population Served by Systems > Threshold (credible intervals)[3]	
Current MCL	0.0002	87,727,200	2,278,300	(1,853,700 - 3,307,300)	2.60%	(2.11% - 3.77%)
Possible PQL/MCL[4]	0.0001	87,727,200	2,828,300	(2,182,700 - 4,353,900)	3.22%	(2.49% - 4.96%)

Notes:

[1] Results are based on the number and percent of systems (and the corresponding population served by those systems) with estimated mean concentrations above the specified threshold.

[2] All percentages are shown to three significant figures. All system values are rounded to the nearest whole system. All population values are rounded to the nearest hundred.

[3] "Credible intervals" are generated to quantify the uncertainty around each estimated probability in the Bayesian analysis of the occurrence data. For further explanation of credible intervals and the Bayesian analysis, please see "Occurrence Estimation Methodology and Occurrence Findings Report for the Six-Year Regulatory Review" (USEPA, 2002g).

[4] The "possible PQL/MCL" is the possibly lower PQL/MCL as estimated by the analytical feasibility analysis.

[5] This value does not necessarily reflect the number of systems out of compliance with the current MCL, because these data were collected over the 1993 to 1997 time period, and because the value represents the estimated mean value over that time period, not the running quarterly average on which compliance is based.

BILLING CODE 6560–50–C

The results of detailed occurrence and exposure analysis indicate that approximately 0.5 percent of the 14,042 systems sampled in the 16 cross-section States and approximately 0.6 percent of the population served by those systems, might be affected if EPA were to gather the information to recalculate the PQL (estimated to be around 0.0001 mg/L) and to revise the MCL accordingly.

c. Preliminary Decision. Although there are new data that support consideration of a slightly lower PQL (and therefore a possibly lower MCL), EPA does not believe a revision to the NPDWR for DBCP is appropriate at this time. The Agency does not have sufficient data at this time on which to base a PQL recalculation and hence an MCL revision. In addition, because the occurrence of DBCP appears to be minimal between the current MCL and any likely PQL/MCL revision, the Agency believes that any potential revisions to the DBCP NPDWR are unlikely to significantly improve the level of public health protection.

20. 1,2-Dichlorobenzene (o-Dichlorobenzene)

a. Background. EPA published the current NPDWR for 1,2-dichlorobenzene on January 30, 1991 (56 FR 3526 (USEPA, 1991a)). The NPDWR established an MCLG and an MCL of 0.6 mg/L. EPA developed the MCLG based on an RfD of 0.09 mg/kg/day and a cancer classification of D, not classifiable as to human carcinogenicity.

b. Technical Reviews. EPA has initiated a reassessment of the health risks resulting from exposure to 1,2-dichlorobenzene. The revised risk assessment will consider relevant studies on the toxicity of 1,2-dichlorobenzene including its potential developmental and reproductive toxicity. The Agency expects the new risk assessment to be completed in the 2002 or 2003 time frame (USEPA, 2002i).

c. Preliminary Decision. The Agency does not believe a revision to the NPDWR for 1,2-dichlorobenzene is appropriate at this time because a reassessment of the health risks resulting from exposure to 1,2-dichlorobenzene is ongoing.

21. 1,4-Dichlorobenzene (p-Dichlorobenzene)

a. Background. EPA published the current NPDWR for 1,4-dichlorobenzene on July 8, 1987 (52 FR 25690 (USEPA, 1987)). The NPDWR established an MCLG and an MCL of 0.075 mg/L. EPA developed the MCLG based on an RfD of 0.1 mg/kg/day and a cancer classification of C, possible human carcinogen.

b. Technical Reviews. EPA has initiated a reassessment of the health risks resulting from exposure to 1,4-dichlorobenzene. The revised risk assessment will consider relevant studies on the toxicity of 1,4-dichlorobenzene including its potential developmental and reproductive toxicity. The Agency expects the new risk assessment to be completed in the 2002 or 2003 time frame (USEPA, 2002i).

c. Preliminary Decision. The Agency does not believe a revision to the NPDWR for 1,4-dichlorobenzene is appropriate at this time because a reassessment of the health risks resulting from exposure to 1,4-dichlorobenzene is ongoing.

22. 1,2-Dichloroethane (Ethylene Dichloride)

a. *Background.* EPA published the current NPDWR for 1,2-dichloroethane on July 8, 1987 (52 FR 25690 (USEPA, 1987)). The NPDWR established an MCLG of zero based on a cancer classification of B2, probable human carcinogen. The NPDWR also established an MCL of 0.005 mg/L based on analytical feasibility.

b. *Technical Reviews.* EPA has initiated a reassessment of the health risks resulting from exposure to 1,2-dichloroethane. The revised risk assessment will consider relevant studies that have become available on the toxicity of 1,2-dichloroethane including potential developmental and reproductive toxicity. The Agency expects the new risk assessment to be completed in the 2002 or 2003 time frame (USEPA, 2002i).

c. *Preliminary Decision.* The Agency does not believe a revision to the NPDWR for 1,2-dichloroethane is appropriate at this time because a reassessment of the health risks resulting from exposure to 1,2-dichloroethane is ongoing.

23. 1,1-Dichloroethylene

a. *Background.* EPA published the current NPDWR for 1,1-dichloroethylene on July 8, 1987 (52 FR 25690 (USEPA, 1987)). The NPDWR established an MCLG and an MCL of 0.007 mg/L. The Agency developed the MCLG based on an RfD of 0.009 mg/kg/day and a cancer classification of C, possible human carcinogen.

b. *Technical Reviews.* EPA has initiated a reassessment of the health risks resulting from exposure to 1,1-dichloroethylene. The revised risk assessment will consider relevant studies on the toxicity of 1,1-dichloroethylene including its potential developmental and reproductive toxicity. The Agency expects the new risk assessment to be completed in the 2002 or 2003 time frame (USEPA, 2002i).

c. *Preliminary Decision.* The Agency does not believe a revision to the NPDWR for 1,1-dichloroethylene is appropriate at this time because a reassessment of the health risks resulting from exposure to 1,1-dichloroethylene is ongoing.

24. cis-1,2-Dichloroethylene

a. *Background.* EPA published the current NPDWR for cis-1,2-dichloroethylene on January 30, 1991 (56 FR 3526 (USEPA, 1991a)). The NPDWR established an MCLG and MCL of 0.07 mg/L. The Agency developed the MCLG based on an RfD of 0.01 mg/kg/day and a cancer classification of D, not classifiable as to human carcinogenicity.

b. *Technical Reviews.* The Agency has not updated the health risk assessment for cis-1,2-dichloroethylene since the NPDWR was published; however, ATSDR completed a toxicological profile for cis-1,2-dichloroethylene in 1996 (ATSDR, 1996a). This review did not find data that would warrant a review of the RfD or cancer classification. As part of the Six-Year Review process, EPA conducted a literature search for relevant data on the toxicology of cis-1,2-dichloroethylene, including its potential developmental and reproductive toxicity. The literature search did not identify any studies that warrant a review of the RfD or the cancer classification (USEPA, 2002i).

A review of analytical or treatment feasibility is not necessary for cis-1,2-dichloroethylene because changes to the MCLG are not warranted at this time and the current MCL is set at the MCLG. In addition, the results of EPA's review of possible ''other regulatory revisions'' did not identify any issues that were specific to cis-1,2-dichloroethylene (USEPA, 2002e). Since EPA did not identify a health or technology basis for revising the cis-1,2-dichloroethylene NPDWR, the Agency did not conduct a detailed occurrence and exposure analysis.

c. *Preliminary Decision.* After reviewing the results of the pertinent technical analyses, the Agency believes the NPDWR for cis-1,2-dichloroethylene remains appropriate and thus, it is not subject to revision at this time.

25. trans-1,2-Dichloroethylene

a. *Background.* EPA published the current NPDWR for trans-1,2-dichloroethylene on January 30, 1991 (56 FR 3526 (USEPA, 1991a)). The NPDWR established an MCLG and an MCL of 0.1 mg/L. The Agency developed the MCLG based on an RfD of 0.02 mg/kg/day and a cancer classification of D, not classifiable as to human carcinogenicity.

b. *Technical Reviews.* The Agency has not updated the health risk assessment for trans-1,2-dichloroethylene since the NPDWR was published; however, ATSDR completed a toxicological profile for trans-1,2-dichloroethylene in 1996 (ATSDR, 1996a). This review did not find data that would warrant a review of the RfD or cancer classification. As part of the Six-Year Review process, EPA conducted a literature search for relevant data on the toxicology of trans-1,2-dichloroethylene, including its potential developmental and reproductive toxicity. The literature search did not identify any studies that warrant a review of the RfD or the cancer classification (USEPA, 2002i).

A review of analytical or treatment feasibility is not necessary for trans-1,2-dichloroethylene because changes to the MCLG are not warranted at this time and the current MCL is set at the MCLG. In addition, the results of EPA's review of possible ''other regulatory revisions'' did not identify any issues that were specific to trans-1,2-dichloroethylene (USEPA, 2002e). Since EPA did not identify a health or technology basis for revising the trans-1,2-dichloroethylene NPDWR, the Agency did not conduct a detailed occurrence and exposure analysis.

c. *Preliminary Decision.* After reviewing the results of the pertinent technical analyses, the Agency believes the NPDWR for trans-1,2-dichloroethylene remains appropriate and thus, it is not subject to revision at this time.

26. Dichloromethane (Methylene Chloride)

a. *Background.* EPA published the NPDWR for dichloromethane on July 17, 1992 (57 FR 31776 (USEPA, 1992)). The NPDWR established an MCLG of zero based on a cancer classification of B2, probable human carcinogen. The NPDWR also established an MCL of 0.005 mg/L based on analytical feasibility.

b. *Technical Reviews.* The Agency has not updated the health risk assessment for dichloromethane since the NPDWR was published; however, ATSDR completed a toxicological profile for dichloromethane in 2000 (USEPA, 2002i). This review did not find any data that would warrant a change in the cancer classification on which the 1992 zero MCLG is based. The ATSDR toxicological profile considered relevant studies on the toxicity of dichloromethane including developmental and reproductive toxicity.

The current MCL for dichloromethane is based on a PQL of 0.005 mg/L. As a part of the Six-Year Review, EPA analyzed more recent WS data to determine if it might be possible to recalculate the PQL (USEPA, 2002d). In addition, the Agency evaluated whether more sensitive analytical methods have been approved and put into use by a wide number of laboratories. The analysis of the WS data indicates that a slight improvement in analytical feasibility might exist. Evaluation of the WS data shows that EPA Regional and State laboratories exhibit greater than 90 percent laboratory passing rates at concentrations around the current PQL of 0.005 mg/L. Because most of the laboratory passing rates exceeded the 75 percent criterion typically used to derive a PQL from WS studies, this information indicates that a lower PQL corresponding to the 75 percent passing rate might exist for dichloromethane. While this information is indicative of a possibly lower PQL, the WS data are insufficient at this time to actually recalculate what the lower PQL for dichloromethane might be.

Using information about the analytical methods most widely used to report results in the WS studies, the MDLs for these methods, and the 10 times MDL multiplier, EPA estimated what the possibly lower PQL/MCL might be. For the analysis of dichloromethane in the more recent WS studies, laboratories predominantly used EPA Methods 524.2 (GC/MS) and 502.2 (Purge and Trap Gas Chromatography), which have MDLs of 0.00003 mg/L and 0.00002 mg/L, respectively. A 10 times MDL multiplier predicts that the PQL may be around 0.0003 to 0.0002 mg/L. The Agency used the average of these two values (0.00025 mg/L) as a threshold (i.e., possible PQL) in the occurrence analysis discussed in this section.

Since the analytical feasibility analysis indicates that the PQL for dichloromethane (and therefore the MCL) could possibly be lower if EPA had more definitive data to recalculate the PQL, EPA considered whether treatment feasibility is likely to pose any limitations (USEPA, 2002k). The current BAT for dichloromethane is PTA. EPA believes this BAT is still practical and would not pose any limitations for dichloromethane at a possibly lower MCL.

The results of EPA's review of possible ''other regulatory revisions'' did not identify any dichloromethane-specific issues (USEPA, 2002e).

EPA evaluated the results of the occurrence and exposure analyses for dichloromethane to determine whether changes to the MCL might be appropriate and likely to result in additional public health protection if the PQL were recalculated (USEPA, 2002g; USEPA, 2002h). Table V–7 shows the results of the detailed occurrence and exposure analysis based on the 16-State cross-section for the current MCL (0.005 mg/L) and the possible PQL/MCL based on the analytical feasibility analysis (0.00025 mg/L).

BILLING CODE 6560–50–P

Table V-7: Dichloromethane Occurrence[1]

Systems[2]					
Threshold (in mg/L)	16 Cross-Section States - Total Systems with Data	Estimated # Systems > Threshold (credible intervals)[3, 5]		Estimated % Systems > Threshold (credible intervals)[3]	
Current MCL 0.005	21,530	3	(1 - 6)	0.0131%	(0.00465% - 0.0279%)
Possible PQL/MCL[4] 0.00025	21,530	1,067	(977 - 1,157)	4.96%	(4.54% - 5.37%)
Population Served by Systems[2]					
Threshold (in mg/L)	16 Cross-Section States - Total Population Served by Systems with Data	Estimated Population Served by Systems > Threshold (credible intervals)[3, 5]		Estimated % Population Served by Systems > Threshold (credible intervals)[3]	
Current MCL 0.005	110,146,100	131,200	(200 - 275,300)	0.119%	(0.000159% - 0.250%)
Possible PQL/MCL[4] 0.00025	110,146,100	10,350,400	(9,383,400 - 11,642,400)	9.40%	(8.52% - 10.6%)

Notes:

[1] Results are based on the number and percent of systems (and the corresponding population served by those systems) with estimated mean concentrations above the specified threshold.

[2] All percentages are shown to three significant figures. All system values are rounded to the nearest whole system. All population values are rounded to the nearest hundred.

[3] "Credible intervals" are generated to quantify the uncertainty around each estimated probability in the Bayesian analysis of the occurrence data. For further explanation of credible intervals and the Bayesian analysis, please see "Occurrence Estimation Methodology and Occurrence Findings Report for the Six-Year Regulatory Review" (USEPA, 2002g).

[4] The "possible PQL/MCL" is the possibly lower PQL/MCL as estimated by the analytical feasibility analysis.

[5] This value does not necessarily reflect the number of systems out of compliance with the current MCL, because these data were collected over the 1993 to 1997 time period, and because the value represents the estimated mean value over that time period, not the running quarterly average on which compliance is based.

BILLING CODE 6560–50–C

The results of the detailed occurrence and exposure analysis indicate that less than 5 percent of the 21,530 systems sampled in the 16 cross-section States and slightly more than 9 percent of the population served by those systems, might be affected if EPA were to gather information to recalculate the PQL (to a lower PQL of around 0.00025 mg/L) and revise the MCL accordingly.

c. *Preliminary Decision.* EPA does not believe it is appropriate to revise the NPDWR for dichloromethane at this time because the data indicating the possibility of a PQL/MCL revision are not sufficient to support a regulatory revision at this time. However, EPA believes there may be an opportunity for improvement in the level of public health protection if the Agency had sufficient data to recalculate the PQL. The Agency therefore solicits comment on whether to gather better data on which to recalculate the PQL. Any such effort is unlikely to be completed in time to inform the revise/not revise decision for the final notice but may provide new information for consideration during the next six-year review cycle.

27. 1,2-Dichloropropane

a. *Background.* EPA published the current NPDWR for 1,2-dichloropropane on January 30, 1991 (56 FR 3526 (USEPA, 1991a)). The NPDWR established an MCLG of zero based on a cancer classification of B2, probable human carcinogen. The NPDWR also established an MCL of 0.005 mg/L based on analytical feasibility.

b. *Technical Reviews.* EPA has not identified any new information that indicates that it is appropriate to revise the cancer classification for 1,2-dichloropropane at this time (USEPA, 2002i). Because the MCLG remains at zero, the Agency believes that a further review of the health effects of 1,2-dichloropropane is not warranted at this time.

The current MCL for 1,2-dichloropropane is based on a PQL of 0.005 mg/L. As a part of the Six-Year Review, EPA analyzed more recent WS data to determine if it might be possible to recalculate the PQL (USEPA, 2002d). In addition, the Agency evaluated whether more sensitive analytical methods have been approved and put into use by a wide number of laboratories. The results of these analyses indicate that some improvement in analytical feasibility might exist. Evaluation of the WS data shows that EPA Regional and State laboratories exhibit greater than 95 percent laboratory passing rates at concentrations around the current PQL of 0.005 mg/L. Because most of the laboratory passing rates exceeded the 75 percent criterion typically used to derive a PQL from WS studies, this information indicates that a lower PQL corresponding to the 75 percent passing rate might exist for 1,2-dichloropropane. While this information is indicative of

a possibly lower PQL, the WS data are insufficient at this time to actually recalculate what the lower PQL for 1,2-dichloropropane might be.

Using information about the analytical methods most widely used to report results in the WS studies, the MDLs for these methods, and the 10 times MDL multiplier, EPA estimated what the possibly lower PQL/MCL might be. For the analysis of 1,2-dichloropropane in the more recent WS studies, laboratories predominantly used EPA Methods 524.2 (GC/MS) and 502.2 (Purge and Trap Gas Chromatography), which have MDLs of 0.00004 mg/L and 0.00003 mg/L, respectively. A 10 times MDL multiplier predicts that the PQL may be around 0.0004 to 0.0003 mg/L. EPA used the 0.0004 mg/L value as a threshold in the occurrence analysis discussed in this section.

Since the analytical feasibility analysis indicates that the PQL for 1,2-dichloropropane (and therefore the MCL) could possibly be lower if EPA had more definitive data to recalculate the PQL, EPA considered whether treatment feasibility is likely to pose any limitations (USEPA, 2002k). The current BATs for 1,2-dichloropropane are GAC and PTA. Small system compliance technologies for 1,2-dichloropropane include GAC, PTA, and several other aeration technologies. EPA believes that these BATs are still practical and would not pose any limitations for 1,2-dichloropropane at a possibly lower MCL.

The results of EPA's review of possible ''other regulatory revisions'' did not identify any issues that are specific to 1,2-dichloropropane (USEPA, 2002e).

EPA evaluated the results of the occurrence and exposure analyses for 1,2-dichloropropane to determine whether changes to the MCL might be appropriate and likely to result in additional public health protection if the PQL were recalculated (USEPA, 2002g; USEPA, 2002h). Table V–8 shows the results of the detailed occurrence and exposure analysis based on the 16-State cross-section for the current MCL (0.005 mg/L) and the possible PQL/MCL based on the analytical feasibility analysis (0.0004 mg/L).

BILLING CODE 6560–50–P

Table V-8: 1,2-Dichloropropane Occurrence[1]

Threshold (in mg/L)		16 Cross-Section States - Total Systems with Data	Estimated # Systems > Threshold (credible intervals)[3, 5]		Estimated % Systems > Threshold (credible intervals)[3]	
Systems[2]						
Current MCL	0.005	21,988	1	(0 - 2)	0.00358%	(0.000% - 0.00910%)
Possible PQL/MCL[4]	0.0004	21,988	11	(7 - 16)	0.0506%	(0.0318% - 0.0728%)
Population Served by Systems[2]						
Threshold (in mg/L)		**16 Cross-Section States - Total Population Served by Systems with Data**	**Estimated Population Served by Systems > Threshold (credible intervals)[3, 5]**		**Estimated % Population Served by Systems > Threshold (credible intervals)[3]**	
Current MCL	0.005	110,450,100	39,500	(0 - 142,000)	0.0358%	(0.000% - 0.129%)
Possible PQL/MCL[4]	0.0004	110,450,100	165,700	(145,000 - 197,400)	0.150%	(0.131% - 0.179%)

Notes:

[1] Results are based on the number and percent of systems (and the corresponding population served by those systems) with estimated mean concentrations above the specified threshold.

[2] All percentages are shown to three significant figures. All system values are rounded to the nearest whole system. All population values are rounded to the nearest hundred.

[3] "Credible intervals" are generated to quantify the uncertainty around each estimated probability in the Bayesian analysis of the occurrence data. For further explanation of credible intervals and the Bayesian analysis, please see "Occurrence Estimation Methodology and Occurrence Findings Report for the Six-Year Regulatory Review" (USEPA, 2002g).

[4] The "possible PQL/MCL" is the possibly lower PQL/MCL as estimated by the analytical feasibility analysis.

[5] This value does not necessarily reflect the number of systems out of compliance with the current MCL, because these data were collected over the 1993 to 1997 time period, and because the value represents the estimated mean value over that time period, not the running quarterly average on which compliance is based.

BILLING CODE 6560–50–C

The results of the detailed occurrence and exposure analysis indicate that less than 0.05 percent of the 21,988 systems sampled in the 16 cross-section States and approximately 0.1 percent of the population served by those systems, might be affected if EPA were to gather the information to recalculate the PQL

(to a lower PQL of around 0.0004 mg/L) and revise the MCL accordingly.

c. *Preliminary Decision.* Although there are new data that support consideration of a possibly lower PQL (and therefore a possibly lower MCL), EPA does not believe a revision to the NPDWR for 1,2-dichloropropane is appropriate at this time. The Agency does not have sufficient data at this time on which to base a PQL recalculation and hence an MCL revision. In addition, because the occurrence of 1,2-dichloropropane appears to be minimal between the current MCL and any likely PQL/MCL revision, the Agency believes that any potential revisions to the 1,2-dichloropropane NPDWR are unlikely to significantly improve the level of public health protection.

28. Di(2-ethylhexyl)adipate (DEHA)

a. *Background.* EPA published the NPDWR for DEHA on July 17, 1992 (57 FR 31776 (USEPA, 1992)). The NPDWR established an MCLG and an MCL of 0.4 mg/L. The Agency developed the MCLG based on an RfD of 0.6 mg/kg/day and a cancer classification of C, possible human carcinogen.

b. *Technical Reviews.* The Agency has identified data that indicate it may be appropriate to update the risk assessment for DEHA (USEPA, 2002i). The literature search on reproductive and developmental toxicity identified differences in the evaluation of the critical study on which the MCLG is based. Therefore, EPA believes it is appropriate to update the risk assessment and evaluate relevant new studies that have become available on the toxicity of DEHA and its metabolites including its potential developmental and reproductive toxicity. In light of this information, EPA has initiated a reassessment of the health risks resulting from exposure to DEHA and has already solicited scientific information from the public for consideration (67 FR 1212, January 9, 2002 (USEPA, 2002a)). Because the new assessment is not expected to be completed until the 2003 or 2004 time frame, EPA does not believe it is appropriate to revise the MCLG at this time.

The current MCL is not limited by the analytical or treatment feasibility. Review of these capabilities is not necessary since no changes to the MCL are warranted at this time. The results of EPA's review of possible ''other regulatory revisions'' did not identify any issues that are specific to DEHA (USEPA, 2002e). Because none of these analyses indicate a change to the DEHA regulation, it is not necessary to conduct a detailed occurrence and exposure analysis.

c. *Preliminary Decision.* The Agency does not believe a revision to the NPDWR for DEHA is appropriate at this time. A reassessment of the health risks has been initiated and the Agency does not believe it is appropriate to revise the NPDWR while that effort is in process.

29. Di(2-ethylhexyl)phthalate (DEHP)

a. *Background.* EPA published the current NPDWR for DEHP on July 17, 1992 (57 FR 31776 (USEPA, 1992)). The NPDWR established an MCLG of zero based on a cancer classification of B2, probable human carcinogen, and an MCL of 0.006 based on analytical feasibility.

b. *Technical Reviews.* The Agency has initiated a reassessment of the health risks resulting from exposure to DEHP. Many studies on DEHP and its metabolites have become available over the past decade and are being evaluated as part of the Agency's ongoing assessment. The new assessment will evaluate cancer and noncancer endpoints, including potential developmental and reproductive endpoints. EPA expects the new risk assessment to be completed in the 2002 or 2003 time frame (USEPA, 2002i).

c. *Preliminary Decision.* The Agency does not believe a revision to the NPDWR for DEHP is appropriate at this time because a reassessment of the health risks resulting from exposure to DEHP is ongoing.

30. Dinoseb

a. *Background.* EPA published the current NPDWR for dinoseb on July 17, 1992 (57 FR 31776 (USEPA, 1992)). The NPDWR established an MCLG and an MCL of 0.007 mg/L. The Agency developed the MCLG based on an RfD of 0.001 mg/kg/day and a cancer classification of D, not classifiable as to human carcinogenicity.

b. *Technical Reviews.* The Agency has not updated the health risk assessment for dinoseb since the NPDWR was published. Therefore, as part of the Six-Year Review process, EPA conducted a literature search for relevant data on the toxicology of dinoseb, including its potential developmental and reproductive toxicity. The literature search did not identify any studies that warrant a review of the RfD or the cancer classification (USEPA, 2002i).

A review of analytical or treatment feasibility is not necessary for dinoseb because changes to the MCLG are not warranted at this time, and the current MCL is set at the MCLG. In addition, the results of EPA's review of possible ''other regulatory revisions'' did not identify any dinoseb-specific issues (USEPA, 2002e). Since EPA did not identify a health or technology basis for revising the dinoseb NPDWR, the Agency did not conduct a detailed occurrence and exposure analysis.

c. *Preliminary Decision.* After reviewing the results of the pertinent technical analyses, the Agency believes the NPDWR for dinoseb remains appropriate and thus, it is not subject to revision at this time.

31. Diquat

a. *Background.* EPA published the current NPDWR for diquat on July 17, 1992 (57 FR 31776 (USEPA, 1992)). The NPDWR established an MCLG and an MCL of 0.02 mg/L. The Agency developed the MCLG based on an RfD of 0.002 mg/kg/day and a cancer classification of D, not classifiable as to human carcinogenicity.

b. *Technical Reviews.* The Agency has initiated a reassessment of the health risks from exposure to diquat. The revised risk assessment will consider relevant studies that have become available on the toxicity of diquat, including its potential developmental and reproductive toxicity. The Agency expects the new risk assessment to be completed in the 2002 time frame (USEPA, 2002i).

c. *Preliminary Decision.* The Agency does not believe a revision to the NPDWR for diquat is appropriate at this time because a reassessment of the health risks resulting from exposure to diquat is ongoing.

32. Endothall

a. *Background.* EPA published the current NPDWR for endothall on July 17, 1992 (57 FR 31776 (USEPA, 1992)). The NPDWR established an MCLG and an MCL of 0.1 mg/L. The Agency developed the MCLG based on an RfD of 0.02 mg/kg/day and a cancer classification of D, not classifiable as to human carcinogenicity.

b. *Technical Reviews.* The Agency has initiated a reassessment of the health risks resulting from exposure to endothall. The revised risk assessment will consider relevant studies on the toxicity of endothall including its potential developmental and reproductive toxicity. The Agency expects the new risk assessment to be completed in the 2003 or 2004 time frame (USEPA, 2002i).

c. *Preliminary Decision.* The Agency does not believe a revision to the NPDWR for endothall is appropriate at this time because a reassessment of the health risks resulting from exposure to endothall is ongoing.

33. Endrin

a. *Background.* EPA published the current NPDWR for endrin on July 17, 1992 (57 FR 31776 (USEPA, 1992)). The NPDWR established an MCLG and an MCL of 0.002 mg/L. The Agency developed the MCLG based on an RfD of 0.0003 mg/kg/day and a cancer classification of D, not classifiable as to human carcinogenicity.

b. *Technical Reviews.* The Agency has not updated the health risk assessment for endrin since the NPDWR was published; however, ATSDR completed a toxicological profile for endrin in 1996 (ATSDR, 1996b). This review did not find data that would warrant a review of the RfD or cancer classification. As part of the Six-Year Review process, EPA conducted a literature search for relevant data on the toxicology of endrin, including its potential developmental and reproductive toxicity. The literature search did not identify any studies that warrant a review of the RfD or the cancer classification (USEPA, 2002i).

A review of analytical or treatment feasibility is not necessary for endrin because changes to the MCLG are not warranted at this time and the current MCL is set at the MCLG. In addition, the results of EPA's review of possible ''other regulatory revisions'' did not identify any endrin-specific issues (USEPA, 2002e). Since EPA did not identify a health or technology basis for revising the endrin NPDWR, the Agency did not conduct a detailed occurrence and exposure analysis. (Note: Endrin uses were canceled in 1986 except for use on bird perches, which was canceled in 1991 (USDA, 1998)).

c. *Preliminary Decision.* After reviewing the results of the pertinent technical analyses, the Agency believes the NPDWR for endrin remains appropriate and thus, it is not subject to revision at this time.

34. Epichlorohydrin

a. *Background.* EPA published the current NPDWR for epichlorohydrin on January 30, 1991 (56 FR 3526 (USEPA, 1991a)). The NPDWR established an MCLG of zero based on a cancer classification of B2, probable human carcinogen. The NPDWR imposes a TT requirement that limits the allowable level of epichlorohydrin monomer in the polymer that is added to drinking water as a flocculent to remove particulates. Each water system is required to certify, in writing, to the State (using third-party or manufacturer's certification) that the combination (or product) of dose and monomer level does not exceed the following level: 0.01 percent residual epichlorohydrin monomer in polymer products used during water treatment and dosed at 20 ppm.

b. *Technical Reviews.* EPA has not identified any new information that indicate that it is appropriate to revise the cancer classification for epichlorohydrin at this time. Because the MCLG remains at zero, the Agency believes that a further review of the health effects of epichlorohydrin is not warranted at this time (USEPA, 2002i).

There are no standardized methods available for epichlorohydrin at low levels in drinking water (56 FR 3526 at 3558, July 1, 1991 (USEPA, 1991a)). Therefore, no analysis of analytical feasibility is appropriate for this contaminant. EPA has no new information that indicates it is appropriate to revise the TT requirement for epichlorohydrin at this time (USEPA, 2002k). The results of EPA's review of possible ''other regulatory revisions'' did not identify any issues which are specific to epichlorohydrin (USEPA, 2002e). Since EPA did not identify a health or technology basis for revising the epichlorohydrin NPDWR, the Agency did not conduct a detailed occurrence and exposure analysis.

c. *Preliminary Decision.* After reviewing the results of the pertinent technical analyses, the Agency believes the NPDWR for epichlorohydrin remains appropriate and thus, it is not subject to revision at this time.

35. Ethylbenzene

a. *Background.* EPA published the current NPDWR for ethylbenzene on January 30, 1991 (56 FR 3526 (USEPA, 1991a)). The NPDWR established an MCLG and an MCL of 0.7 mg/L. The Agency developed the MCLG based on an RfD of 0.1 mg/kg/day and a cancer classification of D, not classifiable as to human carcinogenicity.

b. *Technical Reviews.* The Agency has initiated a reassessment of the health risks resulting from exposure to ethylbenzene. The revised risk assessment will consider relevant studies that have become available on the toxicity of ethylbenzene, including its potential developmental and reproductive toxicity. The Agency expects the new risk assessment to be completed in the 2002 or 2003 time frame (USEPA, 2002i).

c. *Preliminary Decision.* The Agency does not believe a revision to the NPDWR for ethylbenzene is appropriate at this time because a reassessment of the health risks resulting from exposure to ethylbenzene is ongoing.

36. Ethylene Dibromide (EDB; 1,2-Dibromoethane)

a. *Background.* EPA published the current NPDWR for EDB on January 30, 1991 (56 FR 3526 (USEPA, 1991a)). The NPDWR established an MCLG of zero based on a cancer classification of B2, probable human carcinogen. The NPDWR also established an MCL of 0.00005 mg/L based on analytical feasibility.

b. *Technical Reviews.* The Agency has initiated a reassessment of the health risks resulting from exposure to EDB. The revised risk assessment will consider relevant studies that have become available on the toxicity of EDB, including its developmental and reproductive toxicity. The Agency expects the new risk assessment to be completed in the 2002 or 2003 time frame (USEPA, 2002i).

c. *Preliminary Decision.* The Agency does not believe a revision to the NPDWR for EDB is appropriate at this time because a reassessment of the health risks resulting from exposure to EDB is ongoing.

37. Fluoride

a. *Background.* EPA published the current NPDWR for fluoride on April 2, 1986 (51 FR 11396 (USEPA, 1986a)). The NPDWR established an MCLG and an MCL of 4.0 mg/L. The MCLG was developed from a lowest effect level for crippling skeletal fluorosis of 20 mg/day with continuous exposures over a 20-year or longer period. The LOAEL was divided by an uncertainty factor of 2.5 and a drinking water intake of 2 liters/day (L/day) to obtain the MCLG. Drinking water was considered to be the only source of exposure for the calculation. At the same time, EPA published a secondary maximum contaminant level (SMCL) for fluoride of 2.0 mg/L to protect against dental fluorosis, which is considered to be an adverse cosmetic effect. PWSs exceeding the fluoride SMCL must provide public notification to their customers.

Fluoride is unique as a drinking water contaminant because of its beneficial effects at low level exposures, and because it is voluntarily added to some drinking water systems as a public health measure for reducing the incidence of cavities among the treated population. The amount of fluoride added to drinking water for fluoridation ranges from 0.7 to 1.2 mg/L, depending on ambient air temperatures. The decision to fluoridate a water supply is made by the State or local municipality, and is not mandated by EPA or any other Federal entity.

b. *Technical Reviews.* In 1997, NAS established Dietary Reference Intakes (DRI) for fluoride as a nutrient. As a component of the DRI, NAS established age and gender specific tolerable upper intake levels (UL) to reflect the highest average daily nutrient intake level likely to pose no risk of adverse effects to almost all individuals in the general population. As intake increases above the UL, the potential risk of adverse effects increases. The NAS set the UL for fluoride at 0.10 mg/kg/day for infants, toddlers, and children through eight years of age, to protect them from moderate enamel fluorosis (NAS, 1997). A UL of 10 mg/day was established for adults and for children older than eight years, based on protection against skeletal fluorosis. The NAS UL evaluation of fluoride does not have an effect on the MCLG/MCL because a 2 liter drinking water intake of 4 mg/L equals 8mg/day for adults, which is less than 10 mg/day and allows for fluoride in food and dental products.

In addition, the NAS established age and gender specific Adequate Intake (AI) values for fluoride. AI values are set when the data do not permit determination of the more precise and better known Recommended Dietary Allowance (RDA). The NAS (1997) AI for infants, 0 through 6 months, is 0.01 mg/day and for infants, 7 through 12 months, is 0.5 mg/day. Values for children range from 0.7 mg/day to 3 mg/day increasing with age. For adults, the NAS (1997) AI is 3 mg/day for females, and 4 mg/day for males.

There are new studies regarding the effects of fluoride on bone that have been published since EPA established the MCLG/MCL. EPA believes that it is important to review these new data, since effects on bone are the basis of the present MCLG and MCL. The Agency has conducted a literature search to identify reports of the clinical and epidemiological data on fluoride and the skeletal system. The results of that search indicate that a review of the new data is justified as part of the regulatory review process. EPA plans to request NAS to conduct a review of these data. In light of this planned assessment, EPA does not believe it is appropriate to revise the MCLG at this time.

As part of the continuing review of the new toxicological data for fluoride, EPA also intends to examine the RSC used in the 1986 regulation. At that time, a 100 percent RSC was applied in setting the regulation. The increased use of fluoride in dental products, the tendency for children to swallow these dental products, and the potential for increased exposure from foods support a re-evaluation of the RSC as a component of the fluoride review.

As a part of the review of possible ''other regulatory revisions,'' EPA identified one issue pertaining to the public notification requirement associated with exceedance of the SMCL and the timing of the notification. Currently, PWSs that exceed the SMCL of 2.0 mg/L are required to notify their customers within 12 months of the exceedance. Concern has been expressed that this requirement is not sufficiently timely since dental fluorosis occurs as a result of exposure to high levels of fluoride while the tooth enamel is being laid down. Waiting 12 months to provide public notification may result in young children being exposed to high levels of fluoride during the time at which they are most vulnerable. The Agency will consider any such revisions, if they are still appropriate, once the results of the NAS evaluation are available.

c. *Preliminary Decision.* EPA is continuing its analyses of relevant studies that have been published since 1986 regarding the adverse effects of fluoride on the skeletal system to determine if these data support consideration of whether to revise the current MCLG. As a part of this effort, the Agency plans to request that NAS update the fluoride health risk assessment and review the RSC assumptions. The Agency therefore believes it is not appropriate to revise the NPDWR for fluoride at this time. When the results of the NAS assessment are available, and if they support consideration of whether a revision to the MCLG and/or MCL may be appropriate, EPA will revisit this ''not revise'' decision.

38. Glyphosate

a. *Background.* EPA published the current NPDWR for glyphosate on July 17, 1992 (57 FR 31776 (USEPA, 1992)). The NPDWR established an MCLG and an MCL of 0.7 mg/L. The Agency developed the MCLG based on an RfD of 0.1 mg/kg/day and a cancer classification of D, not classifiable as to human carcinogenicity.

b. *Technical Reviews.* The Agency has initiated a reassessment of the health risks resulting from exposure to glyphosate. The revised risk assessment will consider relevant studies that have become available on the toxicity of glyphosate including its potential developmental and reproductive toxicity. The Agency expects the new risk assessment to be completed in the 2002 or 2003 time frame (USEPA, 2002i).

c. *Preliminary Decision.* The Agency does not believe a revision to the NPDWR for glyphosate is appropriate at this time because a reassessment of the health risks resulting from exposure to glyphosate is ongoing.

39. Heptachlor

a. *Background.* EPA published the current NPDWR for heptachlor on January 30, 1991 (56 FR 3526 (USEPA, 1991a)). The NPDWR established an MCLG of zero based on a cancer classification of B2, probable human carcinogen. The NPDWR also established an MCL of 0.0004 mg/L based on analytical feasibility.

b. *Technical Reviews.* The Agency has not updated the health risk assessment for heptachlor since the NPDWR was published; however, ATSDR completed a toxicological profile for heptachlor in 1993 (ATSDR, 1993). This assessment and other recent information do not warrant a review of the cancer classification because there are inadequate data to support a nonlinear dose-response relationship (USEPA, 2002i). Accordingly, the MCLG remains at zero and the Agency believes that a further review of the health effects of heptachlor is not warranted at this time.

The current MCL for heptachlor is based on a PQL of 0.0004 mg/L. As a part of the Six-Year Review, EPA analyzed more recent WS data to determine if it might be possible to recalculate the PQL (USEPA, 2002d). In addition, the Agency evaluated whether more sensitive analytical methods have been approved and put into use by a wide number of laboratories. The results of these analyses indicate that some improvement in analytical feasibility might exist. Evaluation of the WS data shows that EPA Regional and State laboratories exhibit greater than 90 percent laboratory passing rates at concentrations around the current PQL of 0.0004 mg/L. Because most of the laboratory passing rates exceeded the 75 percent criterion typically used to derive a PQL from WS studies, this information indicates that a lower PQL corresponding to the 75 percent passing rate might exist for heptachlor. While this information is indicative of a possibly lower PQL, the WS data are insufficient at this time to actually recalculate what the lower PQL for heptachlor might be.

Using information about the analytical methods most widely used to report results in the WS studies, the MDLs for these methods, and the 10 times MDL multiplier, EPA estimated what the possibly lower PQL/MCL might be. For the analysis of heptachlor in the more recent WS studies,

laboratories predominantly used EPA Methods 508 (GC/MS), 505 (GC microextraction), and 525.2 (Purge and Trap GC), which have MDLs of 0.0000015 mg/L, 0.000003 mg/L, and 0.00015 mg/L, respectively. A 10 times MDL multiplier predicts PQLs of 0.000015 mg/L, 0.00003 mg/L, and 0.0015 mg/L. EPA chose the intermediate value, rounded up to 0.0001 mg/L, and used this value as a threshold in the occurrence analysis discussed in this section.

Since the analytical feasibility analysis indicates that the PQL for heptachlor (and therefore the MCL) could possibly be lower if EPA had more definitive data to recalculate the PQL, EPA considered whether treatment feasibility is likely to pose any limitations (USEPA, 2002k). The current BAT for heptachlor is GAC. Compliance technologies for small systems include GAC, PAC, and POU GAC. Since heptachlor is a moderately adsorbed contaminant, EPA believes that the BAT and compliance technologies are still practical and would not pose any limitations for heptachlor at a possibly lower MCL.

The results of EPA's review of possible ''other regulatory revisions'' did not identify any heptachlor-specific issues (USEPA, 2002e).

EPA evaluated the results of the occurrence and exposure analyses for heptachlor to determine whether changes to the MCL might be appropriate and likely to result in additional public health protection if the PQL were recalculated (USEPA, 2002g; USEPA, 2002h). Table V–9 shows the results of the detailed occurrence and exposure analyses based on the 16-State cross-section for the current MCL (0.0004 mg/L) and the possible PQL/MCL based on the analytical feasibility analysis (0.0001 mg/L).

BILLING CODE 6560–50–P

Table V-9: Heptachlor Occurrence[1]

Systems[2]					
Threshold (in mg/L)		16 Cross-Section States - Total Systems with Data	Estimated # Systems > Threshold (credible intervals)[3]		Estimated % Systems > Threshold (credible intervals)[3]	
Current MCL	0.0004	14,245	0	(0-0)	0.000%	(0.000% - 0.000%)
Possible PQL/MCL[4]	0.0001	14,245	0	(0-0)	0.0000140%	(0.000% - 0.000%)
Population Served by Systems[2]						
Threshold (in mg/L)		16 Cross-Section States - Total Population Served by Systems with Data	Estimated Population Served by Systems > Threshold (credible intervals)[3]		Estimated % Population Served by Systems > Threshold (credible intervals)[3]	
Current MCL	0.0004	96,563,400	0	(0-0)	0.000%	(0.000% - 0.000%)
Possible PQL/MCL[4]	0.0001	96,563,400	0	(0-0)	0.000000242%	(0.000% - 0.000%)

Notes:

[1] Results are based on the number and percent of systems (and the corresponding population served by those systems) with estimated mean concentrations above the specified threshold.

[2] All percentages are shown to three significant figures. All system values are rounded to the nearest whole system. All population values are rounded to the nearest hundred.

[3] "Credible intervals" are generated to quantify the uncertainty around each estimated probability in the Bayesian analysis of the occurrence data. For further explanation of credible intervals and the Bayesian analysis, please see "Occurrence Estimation Methodology and Occurrence Findings Report for the Six-Year Regulatory Review" (USEPA, 2002g).

[4] The "possible PQL/MCL" is the possibly lower PQL/MCL as estimated by the analytical feasibility analysis.

BILLING CODE 6560–50–C

Based on the detailed occurrence and exposure analysis, heptachlor is unlikely to occur at the current MCL or any potential MCL revision for the States used in the cross-section. Since all heptachlor uses were canceled in the United States in 1988 (except for fire ant use), and since it is subject to the United Nations Prior Informed Consent procedure (USEPA, 2002g; USEPA, 2002h), EPA expects the occurrence of heptachlor in PWSs to be rare.

c. *Preliminary Decision.* Although there are new data that support consideration of a slightly lower PQL (and therefore a possibly lower MCL), EPA does not believe a revision to the NPDWR for heptachlor is appropriate at this time. The Agency does not have sufficient data at this time on which to base a PQL recalculation and hence an MCL revision. Also, the Agency believes that any change in the PQL would be minimal and unlikely to significantly improve the level of public health protection because heptachlor appears to occur very infrequently at concentrations at or below the current MCL.

40. Heptachlor Epoxide

a. *Background.* EPA published the current NPDWR for heptachlor epoxide, a degradate of heptachlor, on January 30, 1991 (56 FR 3526 (USEPA, 1991a)). The NPDWR established an MCLG of zero based on a cancer classification of B2, probable human carcinogen. The NPDWR also established an MCL of 0.0002 mg/L based on analytical feasibility.

b. *Technical Reviews.* The Agency has not updated the health risk assessment for heptachlor epoxide since the NPDWR was published; however, ATSDR completed a toxicological profile for heptachlor epoxide in 1993 (ATSDR, 1993). This review did not find data that would warrant a review of the cancer classification because there are inadequate data to support a nonlinear dose response. Accordingly, the MCLG remains at zero and the Agency believes that a further review of the health effects of heptachlor epoxide is not warranted at this time.

The current MCL for heptachlor epoxide is based on a PQL of 0.0002 mg/L. As a part of the Six-Year Review, EPA analyzed more recent WS data to determine if it might be possible to recalculate the PQL (USEPA, 2002d). In addition, the Agency evaluated whether more sensitive analytical methods have been approved and put into use by a wide number of laboratories. The results of these analyses indicate that a slight improvement in analytical feasibility might exist. Evaluation of the WS data shows that EPA Regional and State laboratories exhibit greater than 85 percent laboratory passing rates at concentrations around the current PQL of 0.0002 mg/L. Because most of the laboratory passing rates exceeded the 75 percent criterion typically used to derive a PQL from WS studies, this information indicates that a lower PQL corresponding to the 75 percent passing rate might exist for heptachlor epoxide. While this information is indicative of a possibly lower PQL, the WS data are insufficient at this time to actually recalculate what the lower PQL for heptachlor epoxide might be.

Using information about the analytical methods most widely used to report results in the WS studies, the MDLs for these methods, and the 10 times MDL multiplier, EPA estimated what the possibly lower PQL/MCL might be. For the analysis of heptachlor epoxide in the more recent WS studies, laboratories predominantly used EPA Methods 505 (GC microextraction), 508 (GC/MS), and 525.2 (Purge and Trap GC), which have MDLs of 0.000004 mg/L, 0.0000059 mg/L, and 0.00013 mg/L, respectively. A 10 times MDL multiplier predicts PQLs of 0.00004 mg/L, 0.000059 mg/L, and 0.0013 mg/L. EPA chose the intermediate value, rounded up to 0.0001 mg/L, and used this value as a threshold in the occurrence analysis discussed in this section.

Since the analytical feasibility analysis indicates that the PQL for heptachlor epoxide (and therefore the MCL) could possibly be lower if EPA had more definitive data to recalculate the PQL, EPA considered whether treatment feasibility is likely to pose any limitations (USEPA, 2002k). The current BAT for heptachlor epoxide is GAC. Compliance technologies for small systems include GAC, PAC, and POU GAC. EPA believes that the BAT and compliance technologies would not pose any limitations for heptachlor epoxide at a possibly lower MCL.

The results of EPA's review of possible ''other regulatory revisions'' did not identify any issues that are specific to heptachlor epoxide (USEPA, 2002e).

EPA evaluated the results of the occurrence and exposure analyses for heptachlor epoxide to determine whether changes to the MCL might be appropriate and likely to result in additional public health protection if the PQL were recalculated (USEPA, 2002g; USEPA, 2002h). Table V–10 shows the results of the detailed occurrence and exposure analyses based on the 16-State cross-section for the current MCL (0.0002 mg/L), and the possible PQL/MCL based on the analytical feasibility analysis (0.0001 mg/L).

BILLING CODE 6560–50–P

Table V-10: Heptachlor Epoxide Occurrence[1]

Systems[2]					
Threshold (in mg/L)		16 Cross-Section States - Total Systems with Data	Estimated # Systems > Threshold (credible intervals)[3]		Estimated % Systems > Threshold (credible intervals)[3]	
Current MCL	0.0002	14,133	0	(0-0)	0.000%	(0.000% - 0.000%)
Possible PQL/MCL[4]	0.0001	14,133	0	(0-0)	0.000%	(0.000% - 0.000%)
Population Served by Systems[2]						
Threshold (in mg/L)		16 Cross-Section States - Total Population Served by Systems with Data	Estimated Population Served by Systems > Threshold (credible intervals)[3]		Estimated % Population Served by Systems > Threshold (credible intervals)[3]	
Current MCL	0.0002	96,222,900	0	(0-0)	0.000%	(0.000% - 0.000%)
Possible PQL/MCL[4]	0.0001	96,222,900	0	(0-0)	0.000%	(0.000% - 0.000%)

Notes:

[1] Results are based on the number and percent of systems (and the corresponding population served by those systems) with estimated mean concentrations above the specified threshold.

[2] All percentages are shown to three significant figures. All system values are rounded to the nearest whole system. All population values are rounded to the nearest hundred.

[3] "Credible intervals" are generated to quantify the uncertainty around each estimated probability in the Bayesian analysis of the occurrence data. For further explanation of credible intervals and the Bayesian analysis, please see "Occurrence Estimation Methodology and Occurrence Findings Report for the Six-Year Regulatory Review" (USEPA, 2002g).

[4] The "possible PQL/MCL" is the possibly lower PQL/MCL as estimated by the analytical feasibility analysis.

BILLING CODE 6560–50–C

Based on detailed occurrence and exposure analysis, it appears that heptachlor epoxide is unlikely to occur at the current MCL or any potential MCL revision for the States used in the cross-section. Since the parent of heptachlor epoxide (i.e., heptachlor) was canceled for use (except for fire ant use) in the United States and since it is subject to the United Nations Prior Informed Consent procedure (USEPA, 2002g; USEPA, 2002h), EPA expects the occurrence of heptachlor epoxide in PWSs to be rare.

c. *Preliminary Decision.* Although there are new data that support consideration of a slightly lower PQL (and therefore a possibly lower MCL), EPA does not believe a revision to the NPDWR for heptachlor epoxide is appropriate at this time. The Agency does not have sufficient data at this time on which to base a PQL recalculation and hence an MCL revision. Also, the Agency believes that any change in the PQL would be minimal and unlikely to significantly improve the level of public health protection because heptachlor epoxide appears to occur infrequently at concentrations at or below the current MCL.

41. Hexachlorobenzene

a. *Background.* EPA published the current NPDWR for hexachlorobenzene on July 17, 1992 (57 FR 31776 (USEPA, 1992)). The NPDWR established an MCLG of zero based on a cancer classification of B2, probable human carcinogen. The NPDWR also established an MCL of 0.001 mg/L based on analytical feasibility.

b. *Technical Reviews.* The Agency has not updated the health risk assessment for hexachlorobenzene since the NPDWR was published; however, ATSDR completed a toxicological profile for hexachlorobenzene in 1996 (ATSDR, 1996c). This assessment and other recent information do not warrant a review of the cancer classification because there are inadequate data to support a nonlinear dose-response relationship (USEPA, 2002i). Accordingly, the MCLG remains at zero and the Agency believes that a further review of the health effects of hexachlorobenzene is not warranted at this time.

The current MCL for hexachlorobenzene is based on a PQL of 0.001 mg/L. As a part of the Six-Year Review, EPA analyzed more recent WS data to determine if it might be possible to recalculate the PQL (USEPA, 2002d). In addition, the Agency evaluated whether more sensitive analytical methods have been approved and put into use by a wide number of laboratories. The results of these analyses indicate that some improvement in analytical feasibility might exist. Evaluation of the WS data shows that EPA Regional and State laboratories exhibit greater than 90 percent laboratory passing rates at concentrations around the current PQL of 0.001 mg/L. Because most of the laboratory passing rates exceeded the 75 percent criterion typically used to derive a PQL from WS studies, this information indicates that a lower PQL corresponding to the 75 percent passing rate might exist for hexachlorobenzene. While this information is indicative of a possibly lower PQL, the WS data are insufficient at this time to actually

recalculate what the lower PQL for hexachlorobenzene might be.

Using information about the analytical methods most widely used to report results in the WS studies, the MDLs for these methods, and the 10 times MDL multiplier, EPA estimated what the possibly lower PQL/MCL might be. For the analysis of hexachlorobenzene in the more recent WS studies, laboratories predominantly used EPA Methods 508 (GC/MS), 505 (GC microextraction), and 525.2 (Purge and Trap GC), which have MDLs of 0.0000077 mg/L, 0.000002 mg/L and 0.000001 mg/L, respectively. A 10 times MDL multiplier predicts PQLs of 0.000077 mg/L, 0.00002 mg/L, and 0.00001 mg/L. EPA chose the highest value, rounded up to 0.0001 mg/L, and then used this value as a threshold in the occurrence analysis discussed in this section.

Since the analytical feasibility analysis indicates that the PQL for hexachlorobenzene (and therefore the MCL) could possibly be lower if EPA had more definitive data to recalculate the PQL, EPA considered whether treatment feasibility is likely to pose any limitations (USEPA, 2002k). The current BAT for hexachlorobenzene is GAC. Compliance technologies for small systems include GAC, PAC, and POU GAC. Since hexachlorobenzene is a moderately adsorbed contaminant, EPA believes that the BAT and compliance technologies are still practical and would not pose any limitations for hexachlorobenzene at a possibly lower MCL.

The results of EPA's review of possible "other regulatory revisions" did not identify any issues that are specific to hexachlorobenzene (USEPA, 2002e).

EPA evaluated the results of the occurrence and exposure analyses for hexachlorobenzene to determine whether changes to the MCL might be appropriate and likely to result in additional public health protection if the PQL were recalculated (USEPA, 2002g; USEPA, 2002h). Table V–11 shows the results of the detailed occurrence and exposure analyses based on the 16-State cross-section for the current MCL (0.001 mg/L) and the possible PQL/MCL based on the analytical feasibility analysis (0.0001 mg/L).

BILLING CODE 6560–50–P

Table V-11: Hexachlorobenzene Occurrence[1]

Systems[2]					
Threshold (in mg/L)		**16 Cross-Section States - Total Systems with Data**	**Estimated # Systems > Threshold (credible intervals)[3]**		**Estimated % Systems > Threshold (credible intervals)[3]**	
Current MCL	0.001	14,011	0	(0 - 0)	0.000%	(0.000% - 0.000%)
Possible PQL/MCL[4]	0.0001	14,011	1	(0 - 2)	0.00287%	(0.000% - 0.0143%)
Population Served by Systems[2]						
Threshold (in mg/L)		**16 Cross-Section States - Total Population Served by Systems with Data**	**Estimated Population Served by Systems > Threshold (credible intervals)[3]**		**Estimated % Population Served by Systems > Threshold (credible intervals)[3]**	
Current MCL	0.001	94,035,300	0	(0 - 0)	0.000%	(0.000% - 0.000%)
Possible PQL/MCL[4]	0.0001	94,035,300	16,600	(0 - 84,300)	0.0176%	(0.000% - 0.0896%)

Notes:

[1] Results are based on the number and percent of systems (and the corresponding population served by those systems) with estimated mean concentrations above the specified threshold.

[2] All percentages are shown to three significant figures. All system values are rounded to the nearest whole system. All population values are rounded to the nearest hundred.

[3] "Credible intervals" are generated to quantify the uncertainty around each estimated probability in the Bayesian analysis of the occurrence data. For further explanation of credible intervals and the Bayesian analysis, please see "Occurrence Estimation Methodology and Occurrence Findings Report for the Six-Year Regulatory Review" (USEPA, 2002g).

[4] The "possible PQL/MCL" is the possibly lower PQL/MCL as estimated by the analytical feasibility analysis.

BILLING CODE 6560–50–C

The detailed occurrence and exposure analysis indicates that hexachlorobenzene is unlikely to occur at the current MCL or any potential MCL revision for the States used in the cross-section. Since hexachlorobenzene

uses were canceled in the United States in 1984 and since it is subject to the United Nations Prior Informed Consent procedure (USEPA, 2002g; USEPA, 2002h), EPA expects the occurrence of hexachlorobenzene in PWSs to be rare.

c. *Preliminary Decision.* Although there are new data that support consideration of a possibly lower PQL (and therefore a possibly lower MCL), EPA does not believe a revision to the NPDWR for hexachlorobenzene is appropriate at this time. The Agency does not have sufficient data at this time on which to base a PQL recalculation and hence an MCL revision. In addition, because the occurrence of hexachlorobenzene appears to be minimal between the current MCL and any likely PQL/MCL revision, the Agency believes that any potential revisions to the hexachlorobenzene NPDWR are unlikely to significantly improve the level of public health protection.

42. Hexachlorocyclopentadiene

a. *Background.* EPA published the current NPDWR for hexachlorocyclopentadiene on July 17, 1992 (57 FR 31776 (USEPA, 1992)). The NPDWR established an MCLG and an MCL of 0.05 mg/L. The Agency based the MCLG on an RfD of 0.007 mg/kg/day and a cancer classification of D, not classifiable as to human carcinogenicity.

b. *Technical Reviews.* The Agency updated the health risk assessment for hexachlorocyclopentadiene in 2001 (USEPA, 2001c). The revised risk assessment considered relevant studies that were available to the Agency on the toxicity of hexachlorocyclopentadiene including its potential developmental and reproductive toxicity. According to the 1986 EPA Guidelines for Carcinogen Risk Assessment (51 FR 33992, September 24, 1986 (USEPA, 1986b)), evaluation of the weight of evidence for carcinogenicity to humans indicates that hexachlorocyclopentadiene is most appropriately categorized as Group E, evidence of noncarcinogenicity to humans, via inhalation exposure. In accordance with EPA's 1996 Proposed Guidelines for Carcinogen Risk Assessment (61 FR 17960, April 23, 1996 (USEPA, 1996)), hexachlorocyclopentadiene is not likely to be a human carcinogen by the inhalation route. The potential for carcinogenicity by the oral route is unknown. The updated risk assessment changed the RfD from 0.007 to 0.006 mg/kg/day. The change in RfD was the result of a change in the procedure used to model the data but not a change in the underlying toxicology. The RfD could result in a slight change to the MCLG and MCL but that change would not lead to any significant improvement in public health protection.

A review of analytical or treatment feasibility is not necessary for hexachlorocyclopentadiene because changes to the MCLG are not warranted at this time and the current MCL is set at the MCLG. In addition, the results of EPA's review of possible ''other regulatory revisions'' did not identify any hexachlorocyclopentadiene-specific issues (USEPA, 2002e). Since EPA did not identify a health or technology basis for revising the hexachlorocyclopentadiene NPDWR, the Agency did not conduct a detailed occurrence and exposure analysis.

c. *Preliminary Decision.* After reviewing the results of the pertinent technical analyses, the Agency believes the NPDWR for hexachlorocyclopentadiene remains appropriate and thus, it is not subject to revision at this time.

43. Lead

a. *Background.* EPA published the current NPDWR for lead on June 7, 1991 (56 FR 26460 (USEPA, 1991b)). The NPDWR established an MCLG of zero and a lead action level of 0.015 mg/L at the 90th percentile of taps tested. The MCLG for lead is based on three factors: (1) the occurrence of a variety of low level health effects for which it is currently difficult to identify clear threshold exposure levels below which there are no risks of adverse health effects; (2) the Agency's policy goal that drinking water should contribute minimal lead to total lead exposures because a substantial portion of the sensitive population already exceeds acceptable blood lead levels; and (3) the classification of lead as B2, probable human carcinogen.

The NPDWR requires water systems to monitor for lead at the tap. Water systems must optimize corrosion control. This requires water systems serving more than 50,000 persons (except those with extremely low levels of lead in their distribution systems) and those smaller size systems that exceed the lead action level to install corrosion control treatment and to monitor for specified water quality control parameters. The NPDWR also includes other TT requirements for those systems exceeding the lead action level. These systems must: (1) Monitor for lead in source water; (2) install source water treatment, if appropriate; (3) conduct public education for as long as they continue to exceed the action level; and (4) replace the portion of lead service line in the distribution system they own, if they continue to exceed the action level after installing corrosion control treatment and/or source water treatment. EPA published revisions to the lead NPDWR on January 12, 2000 (65 FR 1950 (USEPA, 2000a)). These revisions made changes to monitoring and reporting requirements, public education, and the lead service line replacement requirements but did not affect the lead MCLG, action level, or other TT requirements.

b. *Technical Reviews.* EPA has not identified any new assessments that indicate that it is appropriate to revise the MCLG for lead at this time (USEPA, 2002i). Although ATSDR completed a toxicological profile for lead in 1999 (ATSDR, 1999), the review did not find data that would warrant a change in the MCLG for lead. Because the MCLG remains at zero, the Agency believes that a further review of the health effects of lead is not warranted at this time.

EPA identified several potential research needs which may be considered in the context of an overall drinking water research strategy. These research needs are described in the ''Water Treatment Technology Feasibility Support Document of Chemical Contaminants in Support of EPA Six-Year Review of National Primary Drinking Water Regulations'' (USEPA, 2002k).

Some stakeholders have suggested that EPA allow alternatives to corrosion control treatment (e.g., monitoring and flushing at non-transient, non-community water systems (NTNCWSs)) (USEPA, 2002e). EPA considered these alternatives as a part of the January 2000 revisions and determined that it was not appropriate to make such revisions to the TT requirements for lead and copper (65 FR 1950, January 12, 2000 (USEPA, 2000a)). If new peer-reviewed scientific information becomes available, it will be considered.

EPA also considered several potential revisions to requirements pertaining to the monitoring requirements for lead and copper in drinking water based on concerns recently expressed by stakeholders (USEPA, 2002e). As a part of the Six-Year Review process, EPA considered issues including: (1) Further reduction of the monitoring requirements; (2) monitoring for lead and copper on the same frequency as other inorganic and organic chemicals; (3) expanding the monitoring waiver program to water systems that have not exceeded one-half the lead and copper action levels for three monitoring rounds, regardless of plumbing materials used; (4) revising the protocol by which tap water sampling sites are identified; and (5) allowing fewer than five tap water samples for NTNCWSs

that have fewer than five taps. The Agency addressed all of these issues as a part of the January 2000 revisions. If new peer-reviewed scientific information becomes available, it will be considered.

The current action level and TT requirements are not limited by analytical feasibility, therefore review of these capabilities is not needed. Since none of the analyses indicate a change to the lead regulation at this time, the Agency did not conduct detailed occurrence and exposure analyses.

c. *Preliminary Decision.* EPA does not believe a revision to the NPDWR for lead is appropriate because the Agency is not aware of any new data/information that provides sufficient basis for revising the regulatory requirements at this time. However, the Agency has identified several technology-related issues that could benefit from further research. These research needs will be considered as a part of an overall drinking water research strategy. As more research in this area becomes available, the Agency will consider the results as a part of the review of the lead NPDWR during future review cycles.

44. Lindane (γ-Hexachlorocyclohexane)

a. *Background.* EPA published the current NPDWR for lindane on January 30, 1991 (56 FR 3526 (USEPA, 1991a)). The NPDWR established an MCLG and an MCL of 0.0002 mg/L. The Agency based the MCLG on an RfD of 0.0003 mg/L and a cancer classification of C, possible human carcinogen.

b. *Technical Reviews.* The Agency has initiated a reassessment of the health risks resulting from exposure to lindane. The revised risk assessment will consider relevant studies that have become available on the toxicity of lindane including its potential developmental and reproductive toxicity. The Agency expects the new risk assessment to be completed in the 2003 or 2004 time frame (USEPA, 2002i).

c. *Preliminary Decision.* The Agency does not believe a revision to the NPDWR for lindane is appropriate at this time because a reassessment of the health risks resulting from exposure to lindane is ongoing.

45. Mercury (Inorganic)

a. *Background.* EPA published the current NPDWR for inorganic mercury on January 30, 1991 (56 FR 3526 (USEPA, 1991a)). The NPDWR established an MCLG and an MCL of 0.002 mg/L. The Agency based the MCLG on a Drinking Water Equivalent Level (DWEL) of 0.01 mg/L [10] and a cancer classification of D, not classifiable as to human carcinogenicity.

b. *Technical Reviews.* EPA updated the risk assessment for mercury in 1997 as part of the Mercury Study Report to Congress (MSRC) (USEPA, 1997b). The MSRC entailed a review of all available studies on inorganic mercury including reproductive and developmental studies. The MSRC concluded that the database for inorganic mercury is suggestive of effects in animals at doses around 2 mg/kg/day. The data however, are considered insufficient for risk assessment based on any single study or on the database as a whole. Evaluation of data for germ cell mutagenicity led to the conclusion that there is a moderate weight of evidence for potential to produce adverse effects in humans. The MSRC reviewed and kept the 1987 RfD of 0.0003 mg/kg/day based on immune-mediated kidney damage in three studies conducted in a sensitive strain of rats.

The MSRC evaluated data for carcinogenicity of inorganic mercury, largely from studies of mercuric chloride. Based on the absence of human data and limited data in animals, inorganic mercury was categorized as Group C, possible human carcinogen; this determination was posted on IRIS for mercuric chloride (USEPA, 1995). The MSRC also applied the proposed revisions to the Cancer Guidelines (61 FR 17960, April 23, 1996 (USEPA, 1996)) to the evaluation of inorganic mercury. The conclusion was that inorganic mercury is not likely to be a human carcinogen under conditions of exposure generally encountered in the environment. This was based in part on the observation that all tumors were observed at very high doses, in excess of the maximum tolerated dose (MTD) and that likely modes of action for these tumors involved irritation and cytotoxic effects not expected to occur at environmental levels.

The revised risk assessments show that inorganic mercury is not likely to be a carcinogen at levels found in water and that there are insufficient data to categorize inorganic mercury as a developmental toxicant. The EPA RfD has not changed, and thus, EPA does not believe it is appropriate to revise the MCLG at this time.

A review of analytical or treatment feasibility is not necessary for mercury because, in EPA's judgment, changes to the MCLG are not warranted at this time and the current MCL is set at the MCLG. In addition, the results of EPA's review of possible ''other regulatory revisions'' did not identify any mercury-specific issues (USEPA, 2002e). Since EPA did not identify a health or technology basis for revising the mercury NPDWR, the Agency did not conduct a detailed occurrence and exposure analysis.

c. *Preliminary Decision.* After reviewing the results of the pertinent technical analyses, the Agency believes the NPDWR for inorganic mercury remains appropriate and thus, it is not subject to revision at this time.

46. Methoxychlor

a. *Background.* EPA published the current NPDWR for methoxychlor on January 30, 1991 (56 FR 3526 (USEPA, 1991a)). The NPDWR established an MCLG and an MCL of 0.04 mg/L. The Agency based the MCLG on an RfD of 0.005 mg/kg/day and a cancer classification of D, not classifiable as to human carcinogenicity.

b. *Technical Reviews.* The Agency has initiated a reassessment of the health risks resulting from exposure to methoxychlor. The revised risk assessment will consider relevant studies that have become available on the toxicity of methoxychlor including its potential developmental and reproductive toxicity. The Agency expects the new risk assessment to be completed in the 2002 or 2003 time frame (USEPA, 2002i).

c. *Preliminary Decision.* The Agency does not believe a revision to the NPDWR for methoxychlor is appropriate at this time because a reassessment of the health risks resulting from exposure to methoxychlor is ongoing.

47. Monochlorobenzene (Chlorobenzene)

a. *Background.* EPA published the current NPDWR for monochlorobenzene on January 30, 1991 (56 FR 3526 (USEPA, 1991a)). The NPDWR established an MCLG and an MCL of 0.1 mg/L. The Agency based the MCLG on an RfD of 0.02 mg/kg/day and a cancer classification of D, not classifiable as to human carcinogenicity.

b. *Technical Reviews.* The Agency has not updated the health risk assessment for monochlorobenzene since the NPDWR was published. EPA therefore conducted a literature search for relevant studies on the toxicology of monochlorobenzene including its potential developmental and reproductive toxicity as a part of the Six-Year Review process. The literature search did not identify any new studies

[10] The DWEL was recommended by a panel of experts on mercury, and was derived using the weight of evidence from the entire inorganic mercury database. The DWEL was later back-calculated to an RFD of 0.0003 mg/kg/day (USEPA, 1995).

that warrant a review of the RfD or the cancer classification (USEPA, 2002i).

A review of analytical or treatment feasibility is not necessary for monochlorobenzene because changes to the MCLG are not warranted at this time and the current MCL is set at the MCLG. In addition, the results of EPA's review of possible ''other regulatory revisions'' did not identify any monochlorobenzene-specific issues (USEPA, 2002e). Since EPA did not identify a health or technology basis for revising the monochlorobenzene NPDWR, the Agency did not conduct a detailed occurrence and exposure analysis.

c. *Preliminary Decision.* After reviewing the results of the pertinent technical analyses, the Agency believes the NPDWR for monochlorobenzene remains appropriate and thus, it is not subject to revision at this time.

48. Nitrate (as N)

a. *Background.* EPA published the current NPDWR for nitrate on January 30, 1991 (56 FR 3526 (USEPA, 1991a)). The NPDWR established an MCLG and MCL of 10 mg/L (as nitrogen (N)). The Agency based the MCLG on an RfD of 1.6 mg/kg/day (as N) and a cancer classification of D, not classifiable as to human carcinogenicity.

b. *Technical Reviews.* The current RfD and the MCLG were established to protect infants, the most susceptible segment of the population. At the request of EPA [11], NAS completed an assessment of nitrate in 1995 (NAS, 1995) and did not find any new data that would warrant a review of the RfD or cancer classification. The literature search conducted during the Six-Year Review also did not identify any new studies that warrant a review of the RfD or cancer classification (USEPA, 2002i).

The current MCL is not limited by the analytical or treatment feasibility. Review of these capabilities is not necessary since no changes to the MCL are warranted at this time.

As a part of the Six-Year Review, several States have suggested that EPA revise the current monitoring requirements for nitrate to allow less frequent monitoring in systems with consistently low nitrate/nitrite levels. Some have suggested that EPA place nitrate monitoring under the same monitoring framework used for most other inorganic chemicals (USEPA, 2002e). EPA previously considered these suggestions when the Agency considered chemical monitoring reform and decided not to change the frequency of nitrate monitoring. However, primacy agencies currently have the flexibility to reduce nitrate monitoring for ground water systems from annually to biennial if the Primacy Agency adopts (and EPA approves) an alternative monitoring provision. EPA has established guidance for such alternative monitoring in the Alternative Monitoring Guidelines (USEPA, 1997a). These guidelines were issued after consultation with stakeholders and no new information has been identified that warrants reconsideration of this issue.

Detailed occurrence and exposure analysis is not necessary since none of the analyses indicate a change to the nitrate regulation at this time.

c. *Preliminary Decision.* The Agency does not believe a revision to the NPDWR for nitrate is appropriate at this time because: (1) There are no changes in the health risk assessment for nitrate; and (2) no other new data were identified that indicate the need to revise the NPDWR at this time. (Also see section V.A.49.c of today's action for a discussion of the Agency's decision pertaining to the joint nitrate/nitrite standard.)

49. Nitrite (as N)

a. *Background.* EPA published the current NPDWR for nitrite on January 30, 1991 (56 FR 3526 (USEPA, 1991a)). The NPDWR established an MCLG and an MCL of 1.0 mg/L (as N). The Agency based the MCLG on an RfD of 0.16 mg/kg/day (as N) and a cancer classification of D, not classifiable as to human carcinogenicity.

b. *Technical Reviews.* The current RfD and MCLG were established to protect infants, the most susceptible segment of the population. At the request of EPA, NAS completed an assessment of nitrite in 1995 (NAS, 1995) and did not find any new studies that warrant a review of the RfD or cancer classification. The literature search conducted during the Six-Year Review did not identify any new studies that warrant a review of the RfD or the cancer classification (USEPA, 2002i).

The current MCL is not limited by the analytical or treatment feasibility. Review of these capabilities is not necessary since no changes to the MCL are warranted at this time.

As a part of the Six-Year Review of ''other regulatory revisions,'' EPA received several suggestions regarding the current monitoring requirements for nitrite.[12] Stakeholders raised several potential issues concerning the current monitoring requirements (USEPA, 2002e). These issues include:

- A need for flexibility for States to require systems to collect a distribution system sample for nitrite under certain circumstances, such as if the entry point sample is greater than 50 percent of the MCL, if there is a large amount of ammonia in the raw water, or if chloramines are applied;
- A need for flexibility for States to require systems to monitor for ammonia in raw water; and
- Flexibility to eliminate nitrite monitoring when a disinfection residual is present.

EPA does not believe it has sufficient data at this time on which to base possible changes in monitoring requirements (USEPA, 2002e).

Detailed occurrence and exposure analysis is not necessary since none of the technical analyses indicate a change to the nitrite regulation at this time.

c. *Preliminary Decision.* The Agency does not believe a revision to the NPDWR for nitrite is appropriate at this time because: (1) There are no changes in the health risk assessment for nitrite; and (2) no other new data were identified that indicate the need to revise the NPDWR at this time.

EPA also published an MCLG and an MCL of 10 mg/L (as N) for the sum of nitrate and nitrite on January 30, 1991 (56 FR 3526 (USEPA, 1991a)). The Agency established this joint nitrate/nitrite standard to account for the possible additive toxicity of these two chemicals and also to protect against the deterioration of drinking water quality, since the presence of nitrite in water is indicative of water contaminated with sewage. The Agency has not identified any new data as a part of the Six-Year Review process that indicates that this joint nitrate/nitrite standard needs to be revised.

50. Oxamyl (Vydate)

a. *Background.* EPA published the current NPDWR for oxamyl on July 17, 1992 (57 FR 31776 (USEPA, 1992)). The NPDWR established an MCLG and an MCL of 0.2 mg/L. The Agency based the

[11] This request fulfilled the commitment EPA made to form an inter-agency workgroup to determine what, if any, oncogenic risks exist (56 FR 3526 at 3538, January 30th, 1991 (USEPA, 1991a)).

[12] Current monitoring requirements for nitrite: All community water systems (CWSs), non-transient, non-community water systems (NTNCWSs), and transient non-community water systems (TNCWSs) must monitor for nitrite at each entry point to the distribution system. If the analytical result is less than ½ the MCL (0.5 mg/L), then the system must monitor at a frequency specified by the Primary Agency. If the sample result is greater than or equal to ½ the MCL (0.5 mg/L) then the entry point that exceeded the trigger level must begin quarterly monitoring. The Primary Agency may reduce the quarterly monitoring to annual monitoring after the system has collected four quarters of data. However, the system must collect subsequent samples during the quarter that yielded the highest analytical result.

MCLG on an RfD of 0.025 mg/kg/day and a cancer classification of E, evidence of non-carcinogenicity for humans.

b. *Technical Reviews.* The Agency identified a change in the health assessment that supports consideration of whether to revise the MCLG (USEPA, 2002i). EPA updated the risk assessment in 2000. This new risk assessment considered relevant studies that had become available on the toxicity of oxamyl including its potential developmental and reproductive toxicity. The new risk assessment revised the RfD from 0.025 mg/kg/day to 0.001 mg/kg/day (USEPA, 2000e).

Based on the change in the RfD for oxamyl and using a 20 percent RSC[13], EPA believes that any revision to the MCLG is not likely to be lower than 0.007 mg/L.

In setting the MCLG/MCL in 1992, the Agency determined the PQL for oxamyl to be 0.02 mg/L and analytical feasibility was not considered to be a limitation. EPA has analyzed more recent WS data to determine if analytical feasibility is likely to be a limiting factor in setting a lower MCL (USEPA, 2002d). In addition, the Agency evaluated whether more sensitive methods have been approved and are in use by a wide number of laboratories. The results of these analyses indicate that analytical feasibility is likely to be a limiting factor if EPA were to revise the MCLG and MCL. Although not definitive, the available WS data indicate that the PQL could lie between 0.02 and 0.04 mg/L. EPA used the 0.02 mg/L and the 0.04 mg/L values as thresholds in the occurrence analysis discussed in this section.

Since the health effects technical review supports consideration of whether a revision to the MCLG and MCL may be appropriate, EPA evaluated whether treatment feasibility is likely to pose any limitations (USEPA, 2002k). The current BAT for oxamyl is GAC. Compliance technologies for small systems include GAC, PAC, and POU GAC. EPA believes that the BAT and compliance technologies are still practical and would not pose any limitations for oxamyl at a possibly lower level (i.e., a possibly lower MCL).

The results of EPA's review of possible ''other regulatory revisions'' did not identify any issues that are specific to oxamyl (USEPA, 2002e).

EPA evaluated the results of the occurrence and exposure analyses for oxamyl to determine whether changes to the MCL might be appropriate and likely to result in additional public health protection if the PQL were recalculated (USEPA, 2002g; USEPA, 2002h). Table V–12 shows the results of the detailed occurrence and exposure analyses based on the 16-State cross-section for several concentrations: the current MCL (0.2 mg/L), the possible upper and lower PQLs based on the analytical feasibility analysis (0.02 and 0.04 mg/L), and the possible lower limit of any MCLG value (0.007 mg/L). Based on the detailed analysis of 16 cross-section States, it appears that oxamyl is unlikely to occur at the current MCL or any potential MCL value.

BILLING CODE 6560–50–P

[13] This is the RSC used for the current MCLG and also the default value. EPA has no reason to believe that the RSC for oxamyl would change. See Appendix A for further discussion of the RSC.

Table V-12: Oxamyl Occurrence[1]

Systems[2]					
Threshold (in mg/L)		16 Cross-Section States - Total Systems with Data	Estimated # Systems > Threshold (credible intervals)[3]		Estimated % Systems > Threshold (credible intervals)[3]	
Current MCL	0.2	13,157	0	(0-0)	0.000%	(0.000% - 0.000%)
Possible upper PQL[4]	0.04	13,157	0	(0-0)	0.000%	(0.000% - 0.000%)
Possible lower PQL[5]	0.02	13,157	0	(0-0)	0.000%	(0.000% - 0.000%)
Possible MCL if feasible to set at MCLG[6]	0.007	13,157	0	(0-0)	0.0000456%	(0.000% - 0.000%)
Population Served by Systems[2]						
Threshold (in mg/L)		16 Cross-Section States - Total Population Served by Systems with Data	Estimated Population Served by Systems > Threshold (credible intervals)[3]		Estimated % Population Served by Systems > Threshold (credible intervals)[3]	
Current MCL	0.2	92,345,800	0	(0-0)	0.000%	(0.000% - 0.000%)
Possible upper PQL[4]	0.04	92,345,800	0	(0-0)	0.000%	(0.000% - 0.000%)
Possible lower PQL[5]	0.02	92,345,800	0	(0-0)	0.000%	(0.000% - 0.000%)
Possible MCL if feasible to set at MCLG[6]	0.007	92,345,800	0	(0-0)	0.0000323%	(0.000% - 0.000%)

Notes:

[1] Results are based on the number and percent of systems (and the corresponding population served by those systems) with estimated mean concentrations above the specified threshold.

[2] All percentages are shown to three significant figures. All system values are rounded to the nearest whole system. All population values are rounded to the nearest hundred.

[3] "Credible intervals" are generated to quantify the uncertainty around each estimated probability in the Bayesian analysis of the occurrence data. For further explanation of credible intervals and the Bayesian analysis, please see "Occurrence Estimation Methodology and Occurrence Findings Report for the Six-Year Regulatory Review" (USEPA, 2002g).

[4] The "possible upper PQL" is the likely upper limit of any potential PQL revision.

[5] The "possible lower PQL" is the likely lower limit of any potential PQL revision.

[6] The "possible MCL if feasible to set at MCLG value" is the lowest level indicated by the new health assessment, assuming there were no limitations due to analytical feasibility.

BILLING CODE 6560–50–C

c. *Preliminary Decision.* Although there are new data indicating that it might be possible to lower the MCLG and the MCL, analytical feasibility limitations would limit the extent to which the MCL could be revised at the present time. Because any changes in the NPDWR based on setting the MCL at the limitations of analytical feasibility are unlikely to significantly improve the level of public health protection, EPA does not believe a revision to the NPDWR for oxamyl is appropriate at this time. In addition, because oxamyl appears to occur infrequently at concentrations at or below the current MCL, EPA believes that efforts to research more sensitive analytical methods and/or to revise the MCL are low priority and should not be pursued at the present time. EPA requests comment on the extent to which oxamyl is likely to occur at levels between 0.007 and 0.2 mg/L at PWSs. Commenters who disagree with the occurrence evaluation should submit data to support their rationale and evidence to show that oxamyl is of national concern at PWSs at the thresholds evaluated. EPA does plan to update the Health Advisory for oxamyl to reflect the new RfD.

51. Pentachlorophenol

a. *Background.* EPA published the current NPDWR for pentachlorophenol on July 1, 1991 (56 FR 30266 (USEPA, 1991c)). The NPDWR established an MCLG of zero based on a cancer classification of B2, probable human carcinogen. The NPDWR also established an MCL of 0.001 mg/L, based on analytical feasibility.

b. *Technical Reviews.* The Agency has initiated a reassessment of the health risks resulting from exposure to pentachlorophenol. The revised risk assessment will consider relevant studies that have become available on the toxicity of pentachlorophenol

including its potential developmental and reproductive toxicity. The Agency expects the new risk assessment to be completed in the 2002 or 2003 time frame (USEPA, 2002i).

c. *Preliminary Decision.* The Agency does not believe a revision to the NPDWR for pentachlorophenol is appropriate at this time because a reassessment of the health risks resulting from exposure to pentachlorophenol is ongoing.

52. Picloram

a. *Background.* EPA published the current NPDWR for picloram on July 17, 1992 (57 FR 31776 (USEPA, 1992)). The NPDWR established an MCLG and an MCL of 0.5 mg/L. The Agency based the MCLG on an RfD of 0.07 mg/kg/day and a cancer classification of D, not classifiable as to human carcinogenicity.

b. *Technical Reviews.* The Agency identified a change in the health assessment that could lead to a change in the MCLG (USEPA, 2002i). EPA updated the risk assessment in 1998. This new risk assessment considered relevant studies that had become available on the toxicity of picloram including its potential developmental and reproductive toxicity. The new risk assessment revised the RfD from 0.07 mg/kg/day to 0.20 mg/kg/day and classified picloram as Group E, evidence of noncarcinogenicity for humans, according to the 1986 Cancer Guidelines. Picloram has not been evaluated against the Proposed 1996 Cancer Guidelines.

Based on the change in the RfD for picloram and using a 20 percent RSC, [14] EPA believes that any revision to the MCLG is not likely to be higher than 1 mg/L (an increase in the MCLG).

Analytical or treatment feasibility do not pose any limitations for the current MCL and would not be a limiting factor if EPA were to raise the MCLG. The Agency's review of possible ''other regulatory revisions'' did not identify any issues that are specific to picloram (USEPA, 2002e).

EPA evaluated the results of the occurrence and exposure analyses for picloram to determine whether possible changes to the MCL would be likely to result in opportunities for significant cost savings to PWSs and their customers (USEPA, 2002g; USEPA, 2002h). Table V–13 shows the results of the detailed occurrence and exposure analysis based on the 16-State cross-section for the current MCL (0.5 mg/L), and the concentration that would be considered if the EPA revised the MCLG and MCL (i.e., the possible MCLG/MCL of 1 mg/L) based on the new RfD and a 20 percent RSC. Based on the detailed analysis, it appears that picloram is unlikely to occur at concentrations above 0.5 mg/L in the States used for the cross-section.

BILLING CODE 6560–50–P

Table V-13: Picloram Occurrence[1]

Systems[2]					
Threshold (in mg/L)		**16 Cross-Section States - Total Systems with Data**	**Estimated # Systems > Threshold (credible intervals)[3]**		**Estimated % Systems > Threshold (credible intervals)[3]**	
Possible MCLG/MCL[4]	1	12,907	0	(0-0)	0.000%	(0.000% - 0.000%)
Current MCL	0.5	12,907	0	(0-0)	0.000%	(0.000% - 0.000%)
Population Served by Systems[2]						
Threshold (in mg/L)		**16 Cross-Section States - Total Population Served by Systems with Data**	**Estimated Population Served by Systems > Threshold (credible intervals)[3]**		**Estimated % Population Served by Systems > Threshold (credible intervals)[3]**	
Possible MCLG/MCL[4]	1	93,235,500	0	(0-0)	0.000%	(0.000% - 0.000%)
Current MCL	0.5	93,235,500	0	(0-0)	0.000%	(0.000% - 0.000%)

Notes:

[1] Results are based on the number and percent of systems (and the corresponding population served by those systems) with estimated mean concentrations above the specified threshold.

[2] All percentages are shown to three significant figures. All system values are rounded to the nearest whole system. All population values are rounded to the nearest hundred.

[3] "Credible intervals" are generated to quantify the uncertainty around each estimated probability in the Bayesian analysis of the occurrence data. For further explanation of credible intervals and the Bayesian analysis, please see "Occurrence Estimation Methodology and Occurrence Findings Report for the Six-Year Regulatory Review" (USEPA, 2002g).

[4] The "possible MCLG/MCL revision" is the likely upper limit of any revised MCLG/MCL.

BILLING CODE 6560–50–C

[14] This is the RSC used for the current MCLG and also the default value. EPA has no reason to believe that the RSC for picloram would change. See Appendix A for further discussion of the RSC.

The results of the detailed occurrence and exposure analysis indicate that few, if any, of the 12,907 systems sampled in the 16 cross-section States might be affected if EPA were to raise the MCLG/MCL.

c. *Preliminary Decision.* Although there are new data that support consideration of whether to revise the MCLG/MCL for picloram, EPA does not believe a revision to the NPDWR for picloram is appropriate at this time. The Agency believes that any change in the MCLG/MCL would be unlikely to provide an opportunity for significant cost savings to PWSs.

53. Polychlorinated Biphenyls (PCBs)

a. *Background.* EPA published the current NPDWR for PCBs on January 30, 1991 (56 FR 3526 (USEPA, 1991a)). The NPDWR established an MCLG of zero based on a cancer classification of B2, probable human carcinogen. The NPDWR also established an MCL of 0.0005 mg/L based on analytical feasibility.

b. *Technical Reviews.* The Agency has initiated a reassessment of the health risks resulting from exposure to PCBs. The revised risk assessment will consider relevant studies that have become available on the toxicity of PCBs including their potential developmental and reproductive toxicity. The Agency expects the new risk assessment to be completed in the 2002 or 2003 time frame (USEPA, 2002i).

c. *Preliminary Decision.* The Agency does not believe a revision to the NPDWR for PCBs is appropriate at this time because a reassessment of the health risks resulting from exposure to PCBs is ongoing.

54. Selenium

a. *Background.* EPA published the current NPDWR for selenium on January 30, 1991 (56 FR 3526 (USEPA, 1991a)). The NPDWR established an MCLG and an MCL of 0.05 mg/L. The Agency based the MCLG on an RfD of 0.005 mg/kg/day and a cancer classification of D, not classifiable as to human carcinogenicity.

b. *Technical Reviews.* The Agency has not updated the risk assessment for selenium since the NPDWR was published (USEPA, 2002i). However, a 2000 NAS assessment of selenium supports the current RfD based on epidemiological studies of selenosis in humans (NAS, 2000b). The NAS study considered relevant studies that were available on the toxicity of selenium, including its developmental and reproductive toxicity, and established a tolerable upper intake level of 0.4 mg/day for adolescents and adults, a value which is equivalent to the RfD.

A review of analytical or treatment feasibility is not necessary for selenium because changes to the MCLG are not warranted at this time, and the current MCL is set at the MCLG. In addition, the results of EPA's review of possible ''other regulatory revisions'' did not identify any selenium-specific issues (USEPA, 2002e). Since EPA did not identify a health or technology basis for revising the selenium NPDWR, the Agency did not conduct a detailed occurrence and exposure analysis.

c. *Preliminary Decision.* After reviewing the results of the pertinent technical analyses, the Agency believes the NPDWR for selenium remains appropriate and thus, it is not subject to revision at this time.

55. Simazine

a. *Background.* EPA published the current NPDWR for simazine on July 17, 1992 (57 FR 31776 (USEPA, 1992)). The NPDWR established an MCLG and an MCL of 0.004 mg/L. The Agency based the MCLG on an RfD of 0.005 mg/kg/day and a cancer classification of C, possible human carcinogen.

b. *Technical Reviews.* The Agency has initiated a reassessment of the health risks resulting from exposure to simazine. The revised risk assessment will consider relevant studies that have become available on the toxicity of simazine including its potential developmental and reproductive toxicity. The Agency expects the new risk assessment to be completed in the 2003 or 2004 time frame (USEPA, 2002i).

c. *Preliminary Decision.* The Agency does not believe a revision to the NPDWR for simazine is appropriate at this time because a reassessment of the health risks resulting from exposure to simazine is ongoing. The Agency is also re-examining all the triazines and their degradation products as part of its CCL in order to fill any necessary research gaps to enable the Agency to determine whether or not to regulate any or all of the contaminants in this group of compounds.

56. Styrene

a. *Background.* EPA published the current NPDWR for styrene on January 30, 1991 (56 FR 3526 (USEPA, 1991a)). The NPDWR established an MCLG and an MCL of 0.1 mg/L. The Agency based the MCLG on an RfD of 0.2 mg/kg/day and a cancer classification of C, possible human carcinogen.

b. *Technical Reviews.* The Agency has initiated a reassessment of the health risks resulting from exposure to styrene. The revised risk assessment will consider relevant studies that have become available on the toxicity of styrene including its potential developmental and reproductive toxicity. The Agency expects the new risk assessment to be completed in the 2002 or 2003 time frame (USEPA, 2002i).

c. *Preliminary Decision.* The Agency does not believe a revision to the NPDWR for styrene is appropriate at this time because a reassessment of the health risks resulting from exposure to styrene is ongoing.

57. 2,3,7,8-TCDD (Dioxin)

a. *Background.* EPA published the current NPDWR for dioxin on July 17, 1992 (57 FR 31776 (USEPA, 1992)). The NPDWR established an MCLG of zero based on a cancer classification of B2, probable human carcinogen. The NPDWR also established an MCL of 3×10^{-8} mg/L based on analytical feasibility.

b. *Technical Reviews.* The Agency has conducted a comprehensive assessment of the exposure and potential human health effects of dioxin including its potential developmental and reproductive toxicity. The draft document has been reviewed by the SAB (USEPA, 2001b). The Agency is presently in the process of addressing SAB and public comments, and expects to complete the risk assessment in the 2002 or 2003 time frame.

c. *Preliminary Decision.* The Agency does not believe a revision to the NPDWR for dioxin is appropriate at this time because a reassessment of the health risks resulting from exposure to dioxin is ongoing.

58. Tetrachloroethylene

a. *Background.* EPA published the current NPDWR for tetrachloroethylene on January 30, 1991 (56 FR 3526 (USEPA, 1991a)). The NPDWR established an MCLG of zero based on a cancer classification of B2, probable human carcinogen. The NPDWR also established an MCL of 0.005 mg/L based on analytical feasibility.

b. *Technical Reviews.* EPA has initiated a reassessment of the health risks resulting from exposure to tetrachloroethylene. The revised risk assessment will consider relevant studies that have become available on the toxicity of tetrachloroethylene including its potential developmental and reproductive toxicity. The Agency expects the new risk assessment to be completed in the 2002 or 2003 time frame (USEPA, 2002i).

c. *Preliminary Decision.* The Agency does not believe a revision to the NPDWR for tetrachloroethylene is appropriate at this time because a

reassessment of the health risks resulting from exposure to tetrachloroethylene is ongoing.

59. Thallium

a. *Background.* EPA published the current NPDWR for thallium on July 17, 1992 (57 FR 3526 (USEPA, 1991a)). The NPDWR established an MCLG of 0.0005 mg/L based on an RfD of 0.00007 mg/kg/day and a cancer classification of D, not classifiable as to human carcinogenicity. The NPDWR also established an MCL of 0.002 mg/L based on analytical feasibility.

b. *Technical Reviews.* The results of the health effects technical review identified some information on reproductive effects that indicate the need to update the Agency's risk assessment for thallium (USEPA, 2002i). In light of this information, EPA has initiated a reassessment of the health risks resulting from exposure to thallium and has already solicited scientific information from the public for consideration (67 FR 1212, January 9, 2002 (USEPA, 2002a)). The new risk assessment will consider relevant data on the toxicity of thallium including its potential developmental and reproductive toxicity. Because the new assessment is not expected to be completed until the 2004 or 2005 time frame, EPA does not believe it is appropriate to revise the MCLG at this time.

c. *Preliminary Decision.* The Agency does not believe a revision to the NPDWR for thallium is appropriate at this time. A reassessment of the health risks has been initiated and the Agency does not believe it is appropriate to revise the NPDWR while that effort is in process.

60. Toluene

a. *Background.* EPA published the current NPDWR for toluene on January 30, 1991 (56 FR 3526 (USEPA, 1991a)). The NPDWR established an MCLG and an MCL of 1 mg/L. The Agency based the MCLG on an RfD of 0.2 mg/kg/day and a cancer classification of D, not classifiable as to human carcinogenicity.

b. *Technical Reviews.* The Agency has initiated a reassessment of the health risks resulting from exposure to toluene. The revised risk assessment will consider relevant studies that have become available on the toxicity of toluene including its potential developmental and reproductive toxicity. The Agency expects the new risk assessment to be completed in the 2002 or 2003 time frame (USEPA, 2002i).

c. *Preliminary Decision.* The Agency does not believe a revision to the NPDWR for toluene is appropriate at this time because a reassessment of the health risks resulting from exposure to toluene is ongoing.

61. Toxaphene

a. *Background.* EPA published the current NPDWR for toxaphene on January 30, 1991 (56 FR 3526 (USEPA, 1991a)). The NPDWR established an MCLG of zero based on a cancer classification of B2, probable human carcinogen. The NPDWR also established an MCL of 0.003 mg/L based on analytical feasibility.

b. *Technical Reviews.* The Agency has not updated the health risk assessment for toxaphene since the NPDWR was published; however, ATSDR completed a toxicological profile for toxaphene in 1996 (ATSDR, 1996d). This assessment and other recent information do not warrant a review of the cancer classification because the data indicate that toxaphene is mutagenic and would be evaluated using a linear dose-response approach (USEPA, 2002i). Accordingly, the MCLG remains at zero and the Agency believes that a further review of the health effects of toxaphene is not warranted at this time.

The current MCL for toxaphene is based on a PQL of 0.003 mg/L. As a part of the Six-Year Review, EPA analyzed more recent WS data to determine if it might be possible to recalculate the PQL (USEPA, 2002d). In addition, the Agency evaluated whether more sensitive analytical methods have been approved and put into use by a wide number of laboratories. The results of these analyses indicate that some improvement in analytical feasibility might exist. Evaluation of the WS data shows that EPA Regional and State laboratories exhibit greater than 90 percent laboratory passing rates at concentrations around the current PQL of 0.003 mg/L. Because most of the laboratory passing rates exceeded the 75 percent criterion typically used to derive a PQL from WS studies, this information indicates that a lower PQL corresponding to the 75 percent passing rate might exist for toxaphene. While this information is indicative of a possibly lower PQL, the WS data are insufficient at this time to actually recalculate what the lower PQL for toxaphene might be.

Using information about the analytical methods most widely used to report results in the WS studies, the MDLs for these methods, and the 10 times MDL multiplier, EPA estimated what the possibly lower PQL/MCL might be. For the analysis of toxaphene in the more recent WS studies, laboratories predominantly used EPA Methods 508 (GC/MS) and 505 (Purge and Trap GC). No MDL data are available for EPA Method 508 and the MDL for 505 is listed as 0.001 mg/L. A 10 times MDL multiplier based on EPA Method 505 predicts a PQL of 0.01 mg/L, which is higher than the current PQL. Therefore, the 10 times multiplier could not be used to predict a lower PQL and EPA did not use this higher value as a threshold in the occurrence analysis discussed in this section. Instead, EPA used concentration thresholds of one-half the current MCL and the lower limit of detection reported by the States. EPA believes if a lower PQL does exist, that the magnitude of the change would be minimal.

Since the analytical feasibility analysis indicates that the PQL for toxaphene (and therefore the MCL) could possibly be lower if EPA had more definitive data to recalculate the PQL, EPA considered whether treatment feasibility is likely to pose any limitations (USEPA, 2002k). The current BAT for toxaphene is GAC. Compliance technologies for small systems include GAC, PAC, and POU GAC. EPA believes that the BAT and compliance technologies are still practical and would not pose any limitations for toxaphene at a possibly lower MCL.

The results of EPA's review of possible ''other regulatory revisions'' did not identify any issues that are specific to toxaphene (USEPA, 2002e).

EPA evaluated the results of the occurrence and exposure analyses for toxaphene to determine whether changes to the MCL might be appropriate and likely to result in additional public health protection if EPA had sufficient data to recalculate the PQL (USEPA, 2002g; USEPA, 2002h). Table V–14 shows the results of the detailed occurrence and exposure analyses based on the 16-State cross-section for the current MCL (0.003 mg/L), one-half the current MCL (0.0015 mg/L), and the lower level of detection reported by the States (0.001 mg/L).

BILLING CODE 6560–50–P

Table V-14: Toxaphene Occurrence[1]

Systems[2]					
Threshold (in mg/L)		16 Cross-Section States - Total Systems with Data	Estimated # Systems > Threshold (credible intervals)[3]		Estimated % Systems > Threshold (credible intervals)[3]	
Current MCL	0.003	13,805	0	(0 - 0)	0.000%	(0.000% - 0.000%)
½ the Current MCL	0.0015	13,805	0	(0 - 0)	0.000%	(0.000% - 0.000%)
Lower level of detection reported by States	0.001	13,805	1[4]	(0 - 0)	0.000145%	(0.000% - 0.000%)
Population Served by Systems[2]						
Threshold (in mg/L)		16 Cross-Section States - Total Population Served by Systems with Data	Estimated Population Served by Systems > Threshold (credible intervals)[3]		Estimated % Population Served by Systems > Threshold (credible intervals)[3]	
Current MCL	0.003	95,108,100	0	(0 - 0)	0.000%	(0.000% - 0.000%)
½ the Current MCL	0.0015	95,108,100	0	(0 - 0)	0.000%	(0.000% - 0.000%)
Lower level of detection reported by States	0.001	95,108,100	800	(0 - 0)	0.000833%	(0.000% - 0.000%)

Notes:

[1] Results are based on the number and percent of systems (and the corresponding population served by those systems) with estimated mean concentrations above the specified threshold.

[2] All percentages are shown to three significant figures. All system values are rounded to the nearest whole system. All population values are rounded to the nearest hundred.

[3] "Credible intervals" are generated to quantify the uncertainty around each estimated probability in the Bayesian analysis of the occurrence data. For further explanation of credible intervals and the Bayesian analysis, please see "Occurrence Estimation Methodology and Occurrence Findings Report for the Six-Year Regulatory Review" (USEPA, 2002g).

[4] Model output resulted in an estimate of less than half a system; however, the fraction was rounded up to one.

BILLING CODE 6560–50–C

The detailed occurrence and exposure analysis indicates that toxaphene is unlikely to occur at the current MCL or any potential MCL revision for the States used in the cross-section. Since toxaphene uses were canceled in the United States in 1990 and since it is subject to the United Nations Prior Informed Consent (USEPA, 2002g; USEPA, 2002h), EPA expects the occurrence of toxaphene in PWSs to be rare.

c. *Preliminary Decision.* Although there are new data that support consideration of a possibly lower PQL (and therefore a possibly lower MCL), EPA does not believe a revision to the NPDWR for toxaphene is appropriate at this time. The Agency does not have sufficient data at this time on which to base a PQL recalculation and hence an MCL revision. Also, the Agency believes that any change in the PQL would be minimal and unlikely to significantly improve the level of public health protection because toxaphene appears to occur infrequently at concentrations at or below the current MCL.

62. 2,4,5-TP (Silvex; 2,4,5-Trichlorophenoxypropionic Acid)

a. *Background.* EPA published the current NPDWR for 2,4,5-TP on January 30, 1991 (56 FR 3526 (USEPA, 1991a)). The NPDWR established an MCLG and an MCL of 0.05 mg/L. The Agency based the MCLG on an RfD of 0.008 mg/kg/day and a cancer classification of D, not classifiable as to human carcinogenicity.

b. *Technical Reviews.* The Agency has not updated the health risk assessment for 2,4,5-TP since the NPDWR was published. Therefore, as part of the Six-Year Review process, EPA conducted a literature search for relevant data on the toxicology of 2,4,5-TP including its potential developmental and reproductive toxicity. The literature search did not identify any new studies that warrant a review of the RfD or the cancer classification (USEPA, 2002i).

A review of analytical or treatment feasibility is not necessary for 2,4,5-TP because changes to the MCLG are not warranted at this time and the current MCL is set at the MCLG. In addition, the

results of EPA's review of possible ''other regulatory revisions'' did not identify any 2,4,5-TP-specific issues (USEPA, 2002e). Since EPA did not identify a health or technology basis for revising the 2,4,5-TP NPDWR, the Agency did not conduct a detailed occurrence and exposure analysis.

c. *Preliminary Decision.* After reviewing the results of the pertinent technical analyses, the Agency believes the NPDWR for 2,4,5-TP remains appropriate and thus, it is not subject to revision at this time.

63. 1,2,4-Trichlorobenzene

a. *Background.* EPA published the current NPDWR for 1,2,4-trichlorobenzene on July 17, 1992 (57 FR 31776 (USEPA, 1992)). The NPDWR established an MCLG and an MCL of 0.07 mg/L. The Agency based the MCLG on an RfD of 0.01 mg/kg/day and a cancer classification of D, not classifiable as to human carcinogenicity.

b. *Technical Reviews.* The Agency has not updated the health risk assessment for 1,2,4-trichlorobenzene since the NPDWR was published. Therefore, as part of the Six-Year Review process, EPA conducted a literature search for relevant data on the toxicology of 1,2,4-trichlorobenzene, including its potential developmental and reproductive toxicity. The literature search did not identify any new studies that warrant a review of the RfD or the cancer classification (USEPA, 2002i).

A review of analytical or treatment feasibility is not necessary for 1,2,4-trichlorobenzene because changes to the MCLG are not warranted at this time and the current MCL is set at the MCLG. In addition, the results of EPA's review of possible ''other regulatory revisions'' did not identify any 1,2,4-trichlorobenzene-specific issues (USEPA, 2002e). Since EPA did not identify a health or technology basis for revising the 1,2,4-trichlorobenzene NPDWR, the Agency did not conduct a detailed occurrence and exposure analysis.

c. *Preliminary Decision.* After reviewing the results of the pertinent technical analyses, the Agency believes the NPDWR for 1,2,4-trichlorobenzene remains appropriate and thus, it is not subject to revision at this time.

64. 1,1,1-Trichloroethane

a. *Background.* EPA published the current NPDWR for 1,1,1-trichloroethane on July 8, 1987 (52 FR 25690 (USEPA, 1987)). The NPDWR established an MCLG and an MCL of 0.20 mg/L. The Agency developed the MCLG based on an RfD of 0.035 mg/kg/day derived from an inhalation study and a cancer classification of D, not classifiable as to human carcinogenicity.

b. *Technical Reviews.* The Agency has initiated a reassessment of the health risks resulting from exposure to 1,1,1-trichloroethane. The revised risk assessment will consider relevant studies that have become available on the toxicity of toluene including its potential developmental and reproductive toxicity. The Agency expects the new risk assessment to be completed in the 2003 or 2004 time frame (USEPA, 2002i).

c. *Preliminary Decision.* The Agency does not believe a revision to the NPDWR for 1,1,1-trichloroethane is appropriate at this time because a reassessment of the health risks resulting from exposure to 1,1,1-trichloroethane is ongoing.

65. 1,1,2-Trichloroethane

a. *Background.* EPA published the current NPDWR for 1,1,2-trichloroethane on July 17, 1992 (57 FR 31776 (USEPA, 1992)). The NPDWR established an MCLG of 0.003 mg/L based on an RfD of 0.004 mg/kg/day and a cancer classification of C, possible human carcinogen. The NPDWR also established an MCL of 0.005 mg/L based on analytical feasibility.

b. *Technical Reviews.* The Agency has not updated the health risk assessment for 1,1,2-trichloroethane since the NPDWR was published. Therefore, as part of the Six-Year Review process, EPA conducted a literature search for relevant data on the toxicology of 1,1,2-trichloroethane including its potential developmental and reproductive toxicity. The literature search did not identify any studies that warrant a review of the RfD or the cancer classification (USEPA, 2002i).

The current MCL for 1,1,2-trichloroethane is based on a PQL of 0.005 mg/L. As a part of the Six-Year Review, EPA analyzed more recent WS data to determine if it might be possible to recalculate the PQL (USEPA, 2002d). In addition, the Agency evaluated whether more sensitive analytical methods have been approved and put into use by a wide number of laboratories. The results of these analyses indicate that a slight improvement in analytical feasibility might exist. Evaluation of the WS data shows that EPA Regional and State laboratories exhibit greater than 90 percent laboratory passing rates at concentrations around the current PQL of 0.005 mg/L. Because most of the laboratory passing rates exceeded the 75 percent criterion typically used to derive a PQL from WS studies, this information indicates that a lower PQL corresponding to the 75 percent passing rate might exist for 1,1,2-trichloroethane. While this information is indicative of a possibly lower PQL, the WS data are insufficient at this time to actually recalculate what the lower PQL for 1,1,2-trichloroethane might be.

Using information about the analytical methods most widely used to report results in the WS studies, the MDLs for these methods, and the 10 times MDL multiplier, EPA estimated what the possibly lower PQL/MCL might be. For the analysis of 1,1,2-trichloroethane in the more recent WS studies, laboratories predominantly used EPA Methods 524.2 (GC/MS) and 502.2 (Purge and Trap GC), which both have upper limit MDLs of 0.00003 mg/L. A 10 times MDL multiplier predicts a PQL of 0.0003 mg/L. Since this value is below the current MCLG, this supports consideration of whether the MCL might be set at the MCLG if sufficient data were available to recalculate the PQL. EPA did not use the possibly lower PQL as a threshold in the occurrence analysis but instead used 0.003 mg/L (the current MCLG) since this is the lowest level to which the MCL would possibly be revised.

Since the analytical feasibility analysis indicates that the PQL for 1,1,2-trichloroethane (and therefore the MCL) could possibly be lower if EPA had more definitive data to recalculate the PQL, EPA considered whether treatment feasibility is likely to pose any limitations (USEPA, 2002k). The current BATs for 1,1,2-trichloroethane include both PTA and GAC. Small system compliance technologies for 1,1,2-trichloroethane include GAC and several aeration technologies. EPA believes that these BATs and compliance technologies are still practical and would not pose any limitations for 1,1,2-trichloroethane at a possibly lower level.

The results of EPA's review of possible ''other regulatory revisions'' did not identify any issues that are specific to 1,1,2-trichloroethane (USEPA, 2002e).

EPA evaluated the results of the occurrence and exposure analyses for 1,1,2-trichloroethane to determine whether changes to the MCL might be appropriate and likely to result in additional public health protection if sufficient data were available to recalculate the PQL and subsequently set the MCL at the MCLG (USEPA, 2002g; USEPA, 2002h). Table V–15 shows the results of the detailed occurrence and exposure analyses based on the 16-State cross-section for the current MCL (0.005 mg/L) and the potentially revised MCL (0.003 mg/L)

based on setting the MCL at the MCLG. Based on the detailed analysis, it appears that 1,1,2-trichloroethane is unlikely to occur at the current MCL or any potential MCL revisions in the States used for the cross-section.

BILLING CODE 6560–50–P

Table V-15: 1,1,2-Trichloroethane Occurrence[1]

Systems[2]					
Threshold (in mg/L)		16 Cross-Section States - Total Systems with Data	Estimated # Systems > Threshold (credible intervals)[3]		Estimated % Systems > Threshold (credible intervals)[3]	
Current MCL	0.005	22,284	0	(0-0)	0.000%	(0.000% - 0.000%)
Potentially revised MCL[4]	0.003	22,284	0	(0-0)	0.000%	(0.000% - 0.000%)
Population Served by Systems[2]						
Threshold (in mg/L)		16 Cross-Section States - Total Population Served by Systems with Data	Estimated Population Served by Systems > Threshold (credible intervals)[3]		Estimated % Population Served by Systems > Threshold (credible intervals)[3]	
Current MCL	0.005	110,366,500	0	(0-0)	0.000%	(0.000% - 0.000%)
Potentially revised MCL[4]	0.003	110,366,500	0	(0-0)	0.000%	(0.000% - 0.000%)

Notes:

[1] Results are based on the number and percent of systems (and the corresponding population served by those systems) with estimated mean concentrations above the specified threshold.

[2] All percentages are shown to three significant figures. All system values are rounded to the nearest whole system. All population values are rounded to the nearest hundred.

[3] "Credible intervals" are generated to quantify the uncertainty around each estimated probability in the Bayesian analysis of the occurrence data. For further explanation of credible intervals and the Bayesian analysis, please see "Occurrence Estimation Methodology and Occurrence Findings Report for the Six-Year Regulatory Review" (USEPA, 2002g).

[4] The "potentially revised MCL" is the based on setting the MCL at the MCLG, if EPA had sufficient data to recalculate the PQL and if it were found that the analytical feasibility was not a limiting factor.

BILLING CODE 6560–50–C

c. *Preliminary Decision.* Although there are new data that support consideration of whether a lower PQL is possible (and therefore a possibly set the MCL at the MCLG), EPA does not believe a revision to the NPDWR for 1,1,2-trichloroethane is appropriate at this time. The Agency believes that any potential revision to the MCL is unlikely to significantly improve the level of public health protection because 1,1,2-trichloroethane appears to occur infrequently at concentrations at or below the current MCL.

66. Trichloroethylene

a. *Background.* EPA published the current NPDWR for trichloroethylene on July 8, 1987 (52 FR 25690 (USEPA, 1987)). The NPDWR established an MCLG of zero based on a cancer classification of B2, probable human carcinogen. The NPDWR also established an MCL of 0.005 mg/L based on analytical feasibility.

b. *Technical Reviews.* EPA has initiated a reassessment of the health risks resulting from exposure to trichloroethylene. The revised risk assessment will consider relevant studies that have become available on the toxicity of trichloroethylene including its potential developmental and reproductive toxicity. The Agency expects the new risk assessment to be completed in the 2002 or 2003 time frame (USEPA, 2002i).

c. *Preliminary Decision.* The Agency does not believe a revision to the NPDWR for trichloroethylene is appropriate at this time because a reassessment of the health risks resulting from exposure to trichloroethylene is ongoing.

67. Vinyl Chloride

a. *Background.* EPA published the current NPDWR for vinyl chloride on July 8, 1987 (52 FR 25690 (USEPA, 1987)). The NPDWR established an MCLG of zero based on a cancer classification of A, known human carcinogen. The NPDWR also established an MCL of 0.002 mg/L based on analytical feasibility.

b. *Technical Reviews.* The Agency updated the health risk assessment of vinyl chloride in 2000 (USEPA, 2000k). The updated risk assessment included relevant studies that were available on the toxicity of vinyl chloride including its potential developmental and reproductive toxicity. According to the 1986 EPA Guidelines for Carcinogen Risk Assessment, vinyl chloride is categorized as Group A, known human carcinogen. Under the Proposed Guidelines for Carcinogen Risk Assessment (61 FR 17960, April 23, 1996 (USEPA, 1996)), EPA concluded that vinyl chloride is a known human carcinogen by the inhalation route of exposure, based on human epidemiological data and, by analogy, by the oral and dermal routes.

The current MCL for vinyl chloride is based on a PQL of 0.002 mg/L. As a part

of the Six-Year Review, EPA analyzed WS data to determine if it might be possible to recalculate the PQL. In addition, the Agency evaluated whether more sensitive analytical methods have been approved and put into use by a wide number of laboratories. Based on these analyses, the Agency believes the current PQL, and therefore the MCL, is still appropriate (USEPA, 2002d).

A review of treatment feasibility is not necessary for vinyl chloride because no changes to the MCLG or the MCL are warranted at this time. In addition, the results of EPA's review of possible ''other regulatory revisions'' did not identify any vinyl chloride-specific issues (USEPA, 2002e). Since EPA did not identify a health or technology basis for revising the vinyl chloride NPDWR, the Agency did not conduct a detailed occurrence and exposure analysis.

c. *Preliminary Decision.* After reviewing the results of the pertinent technical analyses, the Agency believes the NPDWR for vinyl chloride remains appropriate and thus, it is not subject to revision at this time.

68. Xylenes (Total)

a. *Background.* EPA published the current NPDWR for total xylenes on January 30, 1991 (56 FR 3526 (USEPA, 1991a)). The NPDWR established an MCLG and an MCL of 10 mg/L. The Agency based the MCLG on an RfD of 2 mg/kg/day and a cancer classification of D, not classifiable as to human carcinogenicity.

b. *Technical Reviews.* The Agency has initiated a reassessment of the health risks resulting from exposure to xylenes. The revised risk assessment will consider relevant studies that have become available on the toxicity of xylenes including its potential developmental and reproductive toxicity. The Agency expects the new risk assessment to be completed in the 2002 or 2003 time frame (USEPA, 2002i).

c. *Preliminary Decision.* The Agency does not believe a revision to the NPDWR for xylenes is appropriate at this time because a reassessment of the health risks resulting from exposure to xylenes is ongoing.

B. What Preliminary Decision Has EPA Made Regarding the Total Coliform Rule?

1. Background

EPA published the TCR on June 29, 1989 (54 FR 27544 (USEPA, 1989b)). The TCR is one of several EPA regulations that protect the public from pathogens in drinking water. The TCR requires all PWSs to monitor for the presence of total coliforms in the distribution system. Total coliforms are a group of closely related bacteria that are (with few exceptions) not harmful to humans. They are natural and common inhabitants of the soil and ambient waters (e.g., lakes, rivers and estuaries), as well as in the gastrointestinal tract of animals. A few of these coliforms (fecal coliforms, including *Escherichia coli* or *E. coli* [15]) only grow within the intestinal tract of humans and other warm-blooded animals. Total coliforms may be injured by environmental stresses (e.g., lack of nutrients) and water treatment (e.g., chlorine disinfection) in a manner similar to most bacterial pathogens and many virus pathogens. Therefore, EPA considers them a useful indicator of bacterial and many viral waterborne enteric pathogens. More specifically, for drinking water, total coliforms are used to determine the adequacy of water treatment and the integrity of the distribution system. The absence of total coliforms in the distribution system minimizes the likelihood that fecal pathogens are present. Thus, total coliforms are used to determine the vulnerability of a system to fecal contamination.

The 1989 TCR set an MCLG of zero for total coliforms because EPA was not aware of any data in the scientific literature supporting a particular value for the concentration of coliforms below which no known or anticipated adverse health effects occur, with an adequate margin of safety. The TCR requires systems to monitor for total coliforms at a frequency proportional to the number of people served. If any sample is total coliform-positive, the system must:

- Test the positive culture for the presence of either fecal coliforms or *E. coli;*
- Take one set of 3–4 repeat samples at sites located within five or fewer sampling sites adjacent to the location of the routine positive sample within 24 hours; and
- Take at least 5 routine samples the next month of operation.

2. Technical Reviews

Since the TCR was promulgated in 1989, few technical papers on the occurrence of coliforms in treated water have been published. Much of the recent technical data on coliforms are associated with biofilm studies, specifically the factors that facilitate the growth of coliforms and other microbes within the distribution system (e.g., LeChevallier *et al.,* 1991, 1996; LeChevallier, 1999). In addition, several studies have been published describing the performance of new coliform methods (e.g., Brenner *et al.,* 1993; Grant, 1997).

One recent study examined the relationship between total coliforms and waterborne disease outbreaks (Craun *et al.,* 1997). According to the study results, coliforms were found in 84 percent of the 187 systems during an outbreak investigation, but in the months before any outbreak, they were only detected by 26 percent of these systems. For outbreaks caused by *Cryptosporidium* or *Giardia,* coliforms were only found during 38 percent of the outbreaks. The study, as well as data from the 1993 outbreak of waterborne cryptosporidiosis in Milwaukee (MacKenzie, *et al.*, 1994), continues to support the premise that coliforms are an inadequate indicator for *Cryptosporidium* oocysts and *Giardia* cysts in treated waters, presumably because these protozoa are appreciably more resistant to disinfection than the coliform indicators.

Since promulgation of the TCR, EPA has received comments from a number of stakeholders. Stakeholders have suggested modifications to reduce the burden of implementing the TCR. EPA has determined that an opportunity for implementation burden reduction exists and will analyze the effect that such changes would have on public health protection as part of the Agency's regulatory development/revision process. Only those measures which reduce the TCR implementation burden while still assuring public health protection will be considered by EPA.

3. Preliminary Decision

EPA intends to undertake a rulemaking process to initiate possible revisions to the TCR. As part of this process, EPA believes it may be appropriate to include this rulemaking in a wider effort to review and address broader issues associated with drinking water distribution systems. This would be one way of addressing some of the recommendations of the Microbial/Disinfection Byproducts (M/DBP) Federal Advisory Committee in the Stage 2 M/DBP Agreement in Principle (65 FR 83015, December 29, 2000 (USEPA, 2000h)). As part of the TCR rulemaking, EPA plans to assess the

[15] EPA is aware that *Escherichia coli* O157 may be found in fecally contaminated drinking water. To date, however, none of the EPA-approved methods for *E. coli* and fecal coliforms in drinking water detect *E. coli* O157. Nevertheless, *E. coli* O157, as is true with nonpathogenic *E. coli* strains, is always associated with fecal waste (outside the laboratory) and should be as susceptible to disinfection as the nonpathogenic strains. Therefore, the presence of *E. coli* O157 should always be accompanied by other *E. coli* strains that are detectable by the EPA-approved methods.

effectiveness of the current TCR in reducing public health risk, and what technically supportable alternative/additional monitoring strategies are available that would decrease economic burden while maintaining or improving public health protection.

VI. Request for Comments

A. On Which Issues Is EPA Soliciting Public Comment?

Today's action solicits public comment on the following broad issues.

(1) Is EPA's protocol for the review of the 69 NPDWRs discussed in today's action reasonable and appropriate?

(2) Based on the review, are EPA's revise/not revise conclusions appropriate for each of the 69 NPDWRs?

EPA also invites commenters to submit any new, relevant peer-reviewed data pertaining to the NPDWRs discussed in today's action. Peer-reviewed data are studies/analyses that have been reviewed by qualified individuals (or organizations) who are independent of those who performed the work, but who are collectively equivalent in technical expertise (i.e., peers) to those who performed the original work. A peer review is an in-depth assessment of the assumptions, calculations, extrapolations, alternate interpretations, methodology, acceptance criteria, and conclusions pertaining to the specific major scientific and/or technical work products and of the documentation that supports them (USEPA, 2000i). Relevant data include studies/analyses pertaining to health effects, analytical feasibility, treatment feasibility, and occurrence/exposure related to the contaminants discussed in today's action.

Table VI–1 summarizes the specific comments requested in today's action and provides a cross reference to the section of today's action where the issue is discussed.

BILLING CODE 6560–50–P

Table VI-1: Issues on Which EPA is Requesting Public Comment or Data

	Description of the Public Input Requested	Corresponding section in Notice pertaining to request
(1)	Reasonableness and appropriateness of EPA's protocol	Section IV
(2)	Validity of EPA's methodology and assumptions for estimating occurrence and suitability of using a national extrapolation	Section IV.B.5
(3)	Appropriateness of EPA's revise/not revise decisions	Section V
(4)	Merit of gathering better data on which to recalculate the PQL for dichloromethane.	Section V.A.26
(5)	Occurrence data for oxamyl at levels between 0.007 and 0.2 mg/L	Section V.A.50

BILLING CODE 6560–50–C

EPA also invites commenters to submit any new, relevant peer-reviewed data pertaining to the NPDWRs discussed in today's action.

B. Request for Comments on Use of Plain Language

Executive Order 12866 and the President's memorandum of June 1, 1998, require each agency to write all rules in plain language. We invite your comments on how to make this action easier to understand. For example:

- Have we organized the material to suit your needs?
- Are the decisions in the notice and our rationale for those decisions clearly stated?
- Does the notice contain technical language or jargon that isn't clear?
- Would a different format (grouping and order of sections, use of headings, paragraphing) make the notice easier to understand?
- Would more (but shorter) sections be better?
- Could we improve clarity by adding tables, lists, or diagrams?
- What else could we do to make the notice easier to understand?

VII. EPA's Next Steps

EPA plans a 60-day comment period following this action. For each NPDWR for which the Agency has published its preliminary revise/not revise decision in today's action, EPA will consider the public comments received and review any new peer-reviewed data submitted in support of those public comments to determine whether a different revise/not revise decision is appropriate in light of the submitted data. The Agency plans to publish its final revise/not revise decisions for these NPDWRs in the August 2002 time frame.

The publication of a decision to revise pursuant to SDWA Section 1412(b)(9) is not the end of the regulatory process, but is the beginning of one. A decision to revise starts a regulatory process for a contaminant that involves more detailed analyses concerning health effects, costs, benefits, occurrence, and other matters relevant to deciding whether and how an NPDWR should be revised. At any point in this process, EPA may find that regulatory revisions are no longer appropriate and may discontinue regulatory revision efforts at that time. Review of that contaminant would continue in future six-year reviews.

Similarly, a decision not to revise at this time means only that EPA does not believe that regulatory changes to a particular NPDWR are appropriate now, based on lack of new data, ongoing scientific reviews, low priority, or other reasons discussed in this action. Review of these contaminants continues and future six-year reviews may lead to a decision that regulatory changes are appropriate.

VIII. References

ATSDR. 1992. *Toxicological Profile for 1,2-Dibromo-3-chloropropane.* U.S. Department of Health and Human Services, Public Health Service. 164 pp. Available on the Internet at: http://www.atsdr.cdc.gov/toxprofiles/tp36.html.

ATSDR. 1993. *Toxicological Profile for Heptachlor and Heptachlor Epoxide.* U.S. Department of Health and Human Services, Public Health Service. 162 pp. Available on the Internet at: http://www.atsdr.cdc.gov/toxprofiles/tp12.html.

ATSDR. 1996a. *Toxicological Profile for 1,2-Dichloroethene.* U.S. Department of Health and Human Services, Public

Health Service. 196 pp. Available on the Internet at: http://www.atsdr.cdc.gov/toxprofiles/tp87.html.

ATSDR. 1996b. *Toxicological Profile for Endrin.* U.S. Department of Health and Human Services, Public Health Service. 228 pp. Available on the Internet at: http://www.atsdr.cdc.gov/toxprofiles/tp89.pdf.

ATSDR. 1996c. *Toxicological Profile for Hexachlorobenzene.* U.S. Department of Health and Human Services, Public Health Service. 352 pp.

ATSDR. 1996d. *Toxicological Profile for Toxaphene.* U.S. Department of Health and Human Services, Public Health Service. 248 pp. Available on the Internet at: http://www.atsdr.cdc.gov/toxprofiles/tp94.pdf.

ATSDR. 1999. *Toxicological Profile for Lead.* U.S. Department of Health and Human Services, Public Health Service. 640 pp. Available on the Internet at: http://www.atsdr.cdc.gov/toxprofiles/tp13.pdf.

Brenner, K.P., C.C. Rankin, Y.R. Roybal, G.N. Stelma, P.V. Scarpino, and A.P. Dufour. 1993. New medium for the simultaneous detection of total coliforms and *Escherichia coli* in water. *Applied and Environmental Microbiology.* v. 59, pp. 3534–3544.

Craun, G.F., P.S. Berger, and R. Calderon. 1997. Coliform bacteria and waterborne disease outbreaks. *Journal of the American Water Works Association.* v. 89, pp. 96–104.

Department of Health and Human Services (HHS). 2001. Memorandum from Dr. Scott Masten, Office of Chemical Nomination and Selection, Environmental Toxicology Program to NTP Interagency Committee for Chemical Evaluation and Coordination. Subject: Hexavalent chromium nomination. June 26, 2001.

Flegal, R. et al. 2001. *Scientific Review of Toxicological Human Health Issues Related to Development of a Public Health Goal for Chromium (VI):* Report Prepared by the Chromate Toxicity Review Committee, August 31, 2001. Available on the Internet at: http://www.oehha.ca.gov/public_info/facts/pdf/CrPanelRptFinal901.pdf.

Grant, M.A. 1997. A New Membrane Filtration Medium for Simultaneous Detection and Enumeration of *Escherichia coli* and Total Coliforms. *Applied and Environmental Microbiology.* v. 63, pp. 3526–3530.

LeChevallier, M.W. 1999. The case for maintaining a disinfectant residual. *Journal of the American Water Works Association.* v. 91, No. 1, pp. 86–94.

LeChevallier, M.W., W. Schulz, and R.G. Lee. 1991. Bacterial nutrients in drinking water. *Applied and Environmental Microbiology.* v. 57, pp. 857–862.

LeChevallier, M.W., N.J. Welch, and D.B. Smith. 1996. Full-scale studies of factors related to coliform regrowth in drinking water. *Applied and Environmental Microbiology.* v. 62, pp. 2201–2211.

MacKenzie W.R., N.J. Hoxie, M.E. Proctor, M.S. Gradus, K.A. Blair, D.E. Peterson, J.J. Kazmierczak, D.A. Addiss, K.R. Fox, J.B. Rose, and J.P. Davis. 1994. A massive outbreak in Milwaukee of *Cryptosporidium* infection transmitted through the public water supply. *New England Journal of Medicine.* v. 331, no. 3, pp. 161–167.

NAS. 1995. *Nitrate and nitrite in drinking water.* National Academy Press, Washington, D.C. Available on the Internet at: http://www.nap.edu/books/NI000114/html/index.html.

NAS. 1997. *Dietary reference intakes for calcium, phosphorus, magnesium, vitamin D, and fluoride.* National Academy Press, Washington, D.C. Available on the Internet at: http://books.nap.edu/books/0309063507/html/index.html.

NAS. 2000a. *Copper in drinking water.* National Academy Press, Washington, D.C. Available on the Internet at: http://www.nap.edu/books/0309069394/html.

NAS. 2000b. *Dietary reference intakes for vitamin C, vitamin E, selenium, and carotenoids.* National Academy Press, Washington, D.C. Available on the Internet at: http://www.nap.edu/books/0309069351/html.

NAS. 2001. *Dietary reference intakes for vitamin A, vitamin K, arsenic, boron, chromium, copper, iodine, iron, manganese, molybdenum, nickel, silicon, vanadium, and zinc.* National Academy Press, Washington, D.C. Available on the Internet at: http://www.nap.edu/catalog/10026.html.

NDWAC. 2000. *Recommended Guidance for Review of Existing National Primary Drinking Water Regulations.* November 2000. Available on the Internet at: http://www.epa.gov/safewater/ndwac/guidfnl.pdf.

NTP. 2001. *NTP Study of the Hexavalent Chromium Compound Sodium Dichromate Dihydrate.* Available on the Internet at: http://ntp-server.niehs.nih.gov/htdocs/Studies/HexChromium/hexchromiumpg.html.

United States Department of Agriculture (USDA). 1998. National Agricultural Impact Program—Reregistration Notification Network. Volume 3, Number 11, September 10, 1993. Available on the Internet at: http://ipmwww.ncsu.edu/opmppiap/rnn/rnn3–11.htm.

USEPA. 1975. Water Programs: National Interim Primary Drinking Water Regulations. **Federal Register**. Vol. 40, No. 248, p. 59566. December 24, 1975.

USEPA. 1976. Interim Primary Drinking Water Regulations; Promulgation of Regulations on Radionuclides. **Federal Register**. Vol. 41, No. 133. p. 28401, July 9, 1976.

USEPA. 1979. National Interim Primary Drinking Water Regulations; Control of Trihalomethanes in Drinking Water. **Federal Register**. Vol. 44, No. 231. p. 68624, November 29, 1979.

USEPA. 1985. National Primary Drinking Water Regulations; Volatile Synthetic Organic Chemicals; Final Rule and Proposed Rule. **Federal Register**. Vol. 50, No. 219. p. 46880, November 13, 1985.

USEPA. 1986a. National Primary and Secondary Drinking Water Regulations; Fluoride; Final Rule. **Federal Register**. Vol. 51, No. 63. p. 11396, April 2, 1986.

USEPA. 1986b. EPA Guidelines for Carcinogen Risk Assessment. **Federal Register**. Vol. 51, No. 185. p. 33992, September 24, 1986.

USEPA. 1987. National Primary Drinking Water Regulations—Synthetic Organic Chemicals; Monitoring for Unregulated Contaminants; Final Rule. **Federal Register**. Vol. 52, No. 130. p. 25690, July 8, 1987.

USEPA. 1989a. National Primary and Secondary Drinking Water Regulations; Proposed Rule. **Federal Register**. Vol. 54, No. 97. p. 22062, May 22, 1989.

USEPA. 1989b. Drinking Water; National Primary Drinking Water Regulations; Total Coliforms (Including Fecal Coliforms and *E. coli*); Final Rule. **Federal Register**. Vol. 54, No. 124. p. 27544, June 29, 1989.

USEPA. 1989c. National Primary Drinking Water Regulations; Filtration, Disinfection; Turbidity, *Giardia Lamblia*, Viruses, *Legionella*, and Heterotrophic Bacteria; Final Rule. Part 2. **Federal Register**. Vol. 54, No. 124. p. 27486, June 29, 1989.

USEPA. 1990. National Primary and Secondary Drinking Water Regulations—Synthetic Organic Chemicals and Inorganic Chemicals; Proposed Rule. **Federal Register**. Vol. 55, No. 143. p. 30370, July 25, 1990.

USEPA. 1991a. National Primary Drinking Water Regulations—Synthetic Organic Chemicals and Inorganic Chemicals; Monitoring for Unregulated Contaminants; National Primary Drinking Water Regulations Implementation; National Secondary Drinking Water Regulations; Final Rule. **Federal Register**. Vol. 56, No. 30. p. 3526, January 30, 1991.

USEPA. 1991b. Drinking Water Regulations—Maximum Contaminant Level Goals and National Primary Drinking Water Regulations for Lead and Copper; Final Rule. **Federal Register**. Vol. 56, No. 110. p. 26460, June 7, 1991.

USEPA. 1991c. Drinking Water; National Primary Drinking Water Regulations; Monitoring for Volatile Organic Chemicals; MCLGs and MCLs for Aldicarb, Aldicarb Sulfoxide, Aldicarb Sulfone, Pentachlorophenol, and Barium; Final Rule. **Federal Register**. Vol. 56, No. 126. p. 30266, July 1, 1991.

USEPA. 1992. Drinking Water; National Primary Drinking Water Regulations—Synthetic Organic Chemicals and Inorganic Chemicals; National Primary Drinking Water Regulations Implementation; Final Rule. **Federal Register**. Vol. 57, No. 138. p. 31776, July 17, 1992.

USEPA. 1994a. Public Water System Warning: Cyanide. Memo from William R. Diamond, Acting Director of Drinking Water Standards Division, Office of Ground Water and Drinking Water. March 7, 1994.

USEPA. 1994b. Drinking Water; Maximum Contaminant Level Goals and National Primary Drinking Water Regulations for

Lead and Copper; Final Rule; Technical Corrections. **Federal Register**. Vol. 59, No. 125. p. 33860, June 30, 1994.

USEPA. 1995. *Integrated Risk Information System (IRIS), Mercuric Chloride.* Available on the Internet at: http://www.epa.gov/iris/subst/0692.htm.

USEPA. 1996. Proposed guidelines for carcinogen risk assessment. **Federal Register**. Vol. 61, No. 79. p. 17960, April 23, 1996.

USEPA. 1997a. *Alternative Monitoring Guidelines.* EPA Report 816–R–97–011. August 1997. Available on the Internet at: http://www.epa.gov/safewater/regs/pmrfin.html.

USEPA. 1997b. *Mercury Study Report to Congress;* Volume V: Health Effects of Mercury and Mercury Compounds. EPA Report 452–R–97–009. Office of Air Quality Planning and Standards, Office of Research and Development. December 1997. Available on the Internet at: http://www.epa.gov/ttn/oarpg/t3/reports/volume5.pdf.

USEPA. 1998a. *Small System Compliance Technology List for Non-Microbial Contaminants Regulated Before 1996.* EPA Report 815–R–98–002. September 1998.

USEPA. 1998b. National Primary Drinking Water Regulations: Disinfectants and Disinfection Byproducts; Final Rule. **Federal Register**. Vol. 63, No. 241. p. 69389, December 16, 1998.

USEPA. 1998c. National Primary Drinking Water Regulations: Interim Enhanced Surface Water Treatment; Final Rule. **Federal Register**. Vol. 63, No. 241. p. 69478, December 16, 1998.

USEPA. 1998d. *IRIS, Beryllium and Compounds.* Available on the Internet at: http://www.epa.gov/iris/subst/0012.htm.

USEPA. 1998e. *IRIS, Chlordane (Technical).* Available on the Internet at: http://www.epa.gov/iris/subst/0142.htm.

USEPA. 1998f. *IRIS, Chromium (VI).* Available on the Internet at: http://www.epa.gov/iris/subst/0144.htm.

USEPA. 1999a. Response to Recommendations from the Children's Health Protection Advisory Committee Regarding Evaluation of Existing Environmental Standards; Notice. **Federal Register**. Vol. 64, No. 22. p. 5277, February 3, 1999.

USEPA. 1999b. *Guidelines for Carcinogen Risk Assessment.* NCEA-F–0644 Review Draft. U.S. Environmental Protection Agency Risk Assessment Forum. Washington, D.C. July 1999.

USEPA. 1999c. Announcement of Stakeholders Meeting on the Drinking Water Contaminant Identification and Selection Process, and the 6-Year Review of All Existing National Primary Drinking Water Regulations, as Required by the Safe Drinking Water Act, as Amended in 1996; Notice of Stakeholders Meeting. **Federal Register**. Vol. 64, No. 198. p. 55711, October 14, 1999.

USEPA. 1999d. *A Review of Contaminant Occurrence in Public Water Systems.* EPA Report 816–R–99–006. November 1999. Available on the Internet at: http://www.epa.gov/safewater/occur/nov99_lo.pdf.

USEPA. 1999e. *Stakeholder Meeting on the Contaminant Candidate List and the 6-Year Review of Existing National Primary Drinking Water Regulations.* November 1999. Available on the Internet at: http://www.epa.gov/safewater/ccl/novmtg.html.

USEPA. 1999f. *IRIS, Barium and Compounds.* Available on the Internet at: http://www.epa.gov/iris/subst/0010.htm.

USEPA. 2000a. National Primary Drinking Water Regulations for Lead and Copper; Final Rule. **Federal Register**. Vol. 65, No. 8. p. 1950, January 12, 2000.

USEPA. 2000b. *Working Group Meeting on Contaminant Candidate List Regulatory Determinations and the 6-Year Review of Existing Regulations.* Office of Water. June 2000. Available on the Internet at: http://www.epa.gov/safewater/ccl/junemtg.html.

USEPA. 2000c. *Working Group Meeting on Contaminant Candidate List Regulatory Determinations and the 6-Year Review of Existing Regulations.* Office of Water. July 2000. Available on the Internet at: http://www.epa.gov/safewater/ccl/julymtg.html.

USEPA. 2000d. *NDWAC Working Group Meeting on Contaminant Candidate List Regulatory Determinations and the 6-Year Review of Existing Regulations.* Office of Water. September 2000. Available on the Internet at: http://www.epa.gov/safewater/ccl/25septmtg.html.

USEPA. 2000e. *Interim Reregistration Eligibility Decision (IRED)—Oxamyl.* EPA Report 738–R–00–015. Office of Prevention, Pesticides, and Toxic Substances. October 2000. Available on the Internet at: http://www.epa.gov/oppsrrd1/REDs/0253ired.pdf.

USEPA. 2000f. *Methodology for Deriving Ambient Water Quality Criteria for the Protection of Human Health.* EPA Report 882–B–00–004. Office of Water. October 2000.

USEPA. 2000g. National Primary Drinking Water Regulations; Radionuclides; Final Rule. **Federal Register**. Vol. 65, No. 236. p. 76707, December 7, 2000.

USEPA. 2000h. Stage 2 Microbial and Disinfection Byproducts Federal Advisory Committee Agreement in Principle; Notice. Federal Register. Vol. 65, No. 251. p. 83015, December 29, 2000.

USEPA. 2000i. *Science Policy Council Handbook: Peer Review, 2nd Edition.* EPA Report 100–B–00–001. Office of Science Policy, Office of Research and Development. December 2000.

USEPA. 2000j. *IRIS, Benzene.* Available on the Internet at: http://www.epa.gov/iris/subst/0276.htm.

USEPA. 2000k. *IRIS, Vinyl Chloride.* Available on the Internet at: http://www.epa.gov/iris/subst/1001.htm.

USEPA. 2000l. *EPA Summary Report. Characterization of data variability and uncertainty: Health effects assessments in the Integrated Risk Information System (IRIS).* In response to Congress, HR 106–379. EPA Report 635–R–00–005F. National Center for Environmental Assessment, Office of Research and Development.

USEPA. 2001a. National Primary Drinking Water Regulation; Arsenic and Clarifications to Compliance and New Source Contaminants Monitoring; Final Rule. **Federal Register**. Vol. 66, No. 14. p. 6975, January 22, 2001.

USEPA. 2001b. *Dioxin Reassessment—An SAB Review of the Office of Research and Development's Reassessment of Dioxin.* EPA Report SAB–EC–01–006. May 2001. Available on the Internet at: http://www.epa.gov/sab/ec01006.pdf.

USEPA. 2001c. *IRIS, Hexachlorocyclopentadiene.* Available on the Internet at: http://www.epa.gov/iris/subst/0059.htm.

USEPA. 2002a. Integrated Risk Information System (IRIS); Announcement of 2002 Program; Request for Information; Notice. **Federal Register**. Vol. 67, No. 6. p. 1212, January 9, 2002.

USEPA. 2002b. National Primary Drinking Water Regulations: Long-Term 1 Enhanced Surface Water Treatment Rule; Final Rule. **Federal Register**. Vol. 67, No. 9. p. 1811, January 14, 2002.

USEPA. 2002c. *An Evaluation of Available Economic Information in Support of the Six-Year Review of Existing National Primary Drinking Water Regulations.* Memo from Marc Parrotta, Targeting and Analysis Branch, Office of Ground Water and Drinking Water. March 2002.

USEPA. 2002d. *Analytical Feasibility Support Document for the Six-Year Review of Existing National Primary Drinking Water Regulations (Reassessment of Feasibility for Chemical Contaminants).* EPA Report 815–D–02–002. Draft. March 2002.

USEPA. 2002e. *Consideration of Other Regulatory Revisions for Chemical Contaminants in Support of the Six-Year Review of National Primary Drinking Water Regulations.* EPA Report 815–D–02–003. Draft. March 2002.

USEPA. 2002f. *EPA Protocol for Review of Existing National Primary Drinking Water Regulations.* EPA Report 815–D–02–004. Draft. March 2002.

USEPA. 2002g. *Occurrence Estimation Methodology and Occurrence Findings Report for the Six-Year Regulatory Review.* EPA Report 815–D–02–005. Draft. March 2002.

USEPA. 2002h. *Occurrence Summary and Use Support Document for the Six-Year Regulatory Review.* EPA Report 815–D–02–006. Draft. March 2002.

USEPA. 2002i. *Six-Year Review—Chemical Contaminants—Health Effects Technical Support Document.* EPA Report 822–R–02–001. Draft. February 2002.

USEPA. 2002j. *Six-Year Review of the Total Coliform Rule—Comments Received.* Memo from Kenneth H. Rotert, Standards and Risk Reduction Branch, Office of Ground Water and Drinking Water. March 2002.

USEPA. 2002k. *Water Treatment Technology Feasibility Support Document for Chemical Contaminants; In Support of*

EPA Six-Year Review of National Primary Drinking Water Regulations. EPA Report EPA 815–D–02–001. Draft. February 2002.

Dated: March 28, 2002.

Christine Todd Whitman,

Administrator.

Appendix A: Background on the Calculation of MCLG and Cancer Classification System

Since the identification of contaminants for potential revision may be dependent on whether or not the maximum contaminant level goal (MCLG) could change, a brief explanation of the derivation of the MCLG is warranted. The MCLG is the maximum level of a contaminant in drinking water at which no known or anticipated adverse health effects occur, allowing for an adequate margin of safety. MCLGs are non-enforceable health goals. EPA establishes the maximum contaminant level (MCL) based on the MCLG. The MCL is the maximum permissible level of a contaminant in water which is delivered to any user of a public water system. It is derived based on the MCLG. Prior to the 1996 Amendments to the Safe Drinking Water Act (SDWA), the MCL was set as close to the MCLG as is feasible, taking costs into consideration. The 1996 Amendments to the SDWA permit consideration of costs relative to benefits in establishing a MCL. MCLs are enforceable standards.

For chemicals exhibiting a threshold for toxic effects, EPA establishes the MCLG on the basis of an oral reference dose (RfD). A change in the RfD could lead to a change in the MCLG and thus in the MCL. The RfD is an estimate (with uncertainty spanning perhaps an order of magnitude) of a daily oral exposure to the human population (including sensitive subgroups) that is likely to be without an appreciable risk of deleterious noncancer effects during a lifetime. The RfD is derived as follows:

$$\text{RfD} = \frac{\text{NOAEL or LOAEL or BMD}}{\text{UF} \times \text{MF}}$$

Where:

NOAEL = no-observed-adverse-effect level
LOAEL = lowest-observed-adverse-effect level
BMD = benchmark dose
UF = uncertainty factor
MF = modifying factor

The benchmark dose (BMD) is the statistical lower confidence limit on the dose estimated to produce a predetermined level of change (i.e., 10 percent) in the critical response relative to the control. The uncertainty factor (UF) is used to account for extrapolation uncertainties (e.g., inter-individual variation, interspecies differences, duration of exposure, and use of a LOAEL instead of a NOAEL) and database adequacy. The modifying factor (MF) is used as a judgment factor to account for the confidence in the critical study (or studies) used in the derivation of the RfD (USEPA, 20001).

The MCLG is then derived from the RfD as follows:

$$\text{MCLG} = \frac{\text{RfD} \times \text{bw} \times \text{RSC}}{\text{I}}$$

Where:

bw = body weight (70 kg for adult [16])
RSC = relative source contribution, the fraction of the RfD allocated to drinking water
I = daily drinking water intake (2 liters for adults [16])

The relative source contribution (RSC) is one factor which will determine how much a change in the RfD will lead to a change in the MCLG. RSC refers to the method of accounting for human exposure from multiple sources when setting health-based criteria. The purpose of the RSC is to ensure that the level of a chemical allowed by a criterion or multiple criteria, when combined with other identified sources of exposure common to the population of concern, will not result in exposures that exceed the RfD. The policy of considering multiple sources of exposure when deriving health-based criteria has become common in EPA's risk characterizations, as well as criteria and standard-setting actions. The drinking water program has applied a ceiling level of 80 percent of the RfD and a floor level of 20 percent of the RfD. That is, the MCLG cannot account for more than 80 percent of the RfD, nor less than 20 percent of the RfD. EPA applies an RSC factor of 20 percent to the RfD when adequate exposure data do not exist.

EPA has now revised its RSC method to improve consistency when considering non-water sources of exposure (both ingestion exposures (e.g., food) and exposures other than the oral route (e.g., inhalation). The approach is called the Exposure Decision Tree. RSC estimates will be made by EPA using this approach, which allows for use of either subtraction or percentage methods, depending on chemical-specific circumstances, within the 20 to 80 percent range described in the previous paragraph. For a detailed discussion on the revised approach, refer to the ''Methodology for Deriving Ambient Water Quality Criteria for the Protection of Human Health'' (USEPA, 2000f).

It has also been the Agency policy to apply an additional safety factor to the RfD for chemicals with equivocal evidence of carcinogenicity. This practice is another factor that must be evaluated to determine the impact of a change in RfD on the MCLG.

For drinking water contaminants regulated prior to the 1996 SDWA, EPA's Office of Water (OW) followed a three-category regulatory cancer classification system (Categories I, II, or III). These categories specify decisions as to degree of concern for an agent's carcinogenic potential as a contaminant of drinking water, and define to some extent the approach to risk management which is taken for establishing MCLGs. Categories I, II, and III are designations not defined in guidelines but which reflect OW policy.

EPA used the six alphanumeric categories (A, B1, B2, C, D, E) of the 1986 cancer guidelines (51 FR 33992, September 24, 1986 (USEPA, 1986b)) in establishing the MCLG. The six-group classification system is often equated to the three-category system in the National Primary Drinking Water Regulation (NPDWR) **Federal Register** announcements. Table A–1 describes the three categories and, with few exceptions (e.g., beryllium), their usual equivalent alphanumeric classification. If a chemical is a known or probable human carcinogen (Category I, generally Group A or B), the MCLG is generally set at zero because it is assumed, in the absence of other data, that there is no known threshold for carcinogenicity. If a chemical falls in Group C, an RfD approach along with an additional safety (risk management) factor is used in deriving the MCLG. The methodology used for establishing MCLGs for chemicals with varying degrees of evidence of carcinogenicity is also briefly described in Table A–1.

Recent Agency assessments also use the 1996 Proposed Guidelines for Carcinogen Risk Assessment (61 FR 17960, April 23, 1996 (USEPA,1996)) or the draft revised Guidelines for Carcinogen Risk Assessment (USEPA, 1999b). The proposed guidelines use standard descriptors as part of the hazard narrative to express the weight-of-evidence for carcinogenic hazard potential. The 1996 descriptors are in three categories: ''Known/likely,'' ''cannot be determined,'' and ''not likely.'' Subdescriptors are provided under these categories to further differentiate an agent's carcinogenic potential. The new descriptors permit consideration of exposure route and mode of action when making an assessment of carcinogenicity. The hazard descriptors of the 1996 proposed Guidelines are given in the text to this action whenever appropriate. None of the chemicals discussed in this action have been evaluated under the 1999 draft revised Guidelines for Carcinogen Risk Assessment.

BILLING CODE 6560–50–P

[16] The MCLG for nitrite was based on a 4 kg body weight and a 0.64 liter drinking water intake for infants because they are the group most sensitive to the critical effect.

Table A-1: Cancer Classification Systems Used by EPA	
Three-category regulatory approach for establishing MCLGs	**Corresponding five-group classification system of 1986 Cancer Guidelines**
MCLG generally set at zero	
Category I **Known or probable human carcinogens: Strong evidence of carcinogenicity** Sufficient human or animal evidence of carcinogenicity.	**Generally Group A or Group B** **A: Human carcinogen** Sufficient evidence from epidemiological studies to support a causal association. **B: Probable human carcinogen** ***B1***: Limited evidence of carcinogenicity from epidemiological studies. ***B2***: Inadequate evidence or no data from epidemiological studies; sufficient evidence from animal studies.
MCLG based on the RfD with an additional safety factor of up to 10 to account for possible carcinogenicity, or is based on excess cancer risk range of 10^{-5} to 10^{-6}	
Category II **Limited evidence of carcinogenicity** Some limited but insufficient evidence of carcinogenicity from animal data.	**Generally Group C** **Possible human carcinogen** Limited evidence of carcinogenicity in animals in the absence of human data.
MCLG established using the RfD approach	
Category III **Inadequate or no evidence of carcinogenicity in animals**	**Group D or Group E** **D: Not classifiable as to human carcinogenicity** Inadequate human and animal evidence of carcinogenicity, or no data available. **E: Evidence of non-carcinogenicity for humans** No evidence of carcinogenicity in two different animal species, or in both epidemiological and animal studies.

Sources: 51 *FR* 33992, September 24, 1986 (USEPA, 1986b); and 57 *FR* 31776, July 17, 1992 (USEPA,1992).

[FR Doc. 02–9154 Filed 4–16–02; 8:45 am]
BILLING CODE 6560–50–C

Federal Register

Wednesday,
April 17, 2002

Part IV

Department of the Interior

Bureau of Reclamation

43 CFR Part 423

Public Conduct on Bureau of Reclamation Lands and Projects; Final Rule

DEPARTMENT OF THE INTERIOR

Bureau of Reclamation

43 CFR Part 423

RIN 1006–AA44

Public Conduct on Bureau of Reclamation Lands and Projects

AGENCY: Bureau of Reclamation, Interior.

ACTION: Final rule with request for comments.

SUMMARY: The Bureau of Reclamation (Reclamation) is issuing this rule to establish regulations regarding public conduct on all Reclamation lands (including waters) and Reclamation projects. Reclamation is required by law to issue this rule in order to provide for the security of dams, facilities, and resources under its jurisdiction.

DATES: This rule is effective on April 17, 2002, and shall expire on April 17, 2003. Reclamation must receive any comments on this final rule no later than June 17, 2002.

ADDRESSES: Any comments on this rule should be sent to Bureau of Reclamation, P.O. Box 25007, Denver, CO 80225, Attention: John Lambert, D–6020.

FOR FURTHER INFORMATION CONTACT: Larry Todd, Director, Operations, Bureau of Reclamation, 1849 C Street, NW., Washington, DC 20240, telephone (202) 513–0615.

SUPPLEMENTARY INFORMATION:

I. Background

On September 11, 2001, terrorists launched attacks on targets within the United States killing large numbers of people and damaging properties of national significance. Reclamation is responsible for protecting 348 reservoirs and more than 500 Federal dams, 58 hydroelectric power plants, and over 8 million acres of Federal property including 300 recreation areas, many of national significance. Additionally, Reclamation projects host 90 million visitors each year. Personnel, vehicles or water vessels operating at Reclamation lands, facilities, and waters could gain unauthorized access to these lands, facilities, and water, threaten the safety of Reclamation employees and visitors, or launch terrorist attacks or commit other criminal acts against dams, power plants, property, and adjacent population centers.

Public Law 107–69 (November 12, 2001) provides for law enforcement authority within Reclamation projects and on Reclamation lands and section 1(a) of this law requires us to ''issue regulations necessary to maintain law and order and protect persons and property within Reclamation projects and on Reclamation lands.'' This regulation establishes rules and regulations governing public conduct on all Reclamation lands and Reclamation projects, including all waters subject to the jurisdiction of Reclamation. The regulation establishes the minimum rules and regulations necessary for law enforcement officers to ensure the safety of the public and Reclamation employees, to protect critical water and power resource facilities, and to address potential criminal activities against Reclamation facilities and individuals within those facilities. Further, many of these regulations are derived from long-standing National Park Service regulations, which are well-known and well-understood by the public, and which in most, if not all, cases were subject to public comment and review when first proposed.

II. Determination To Issue Final Rule Effective in Less Than 30 Days

We did not publish a notice of proposed rulemaking for this regulation. In keeping with the requirements of 5 U.S.C. 553 (b), we find that good reason exists for not publishing a notice of proposed rulemaking. In keeping with the requirements of 5 U.S.C. 553 (d)(3), we also find that good reason exists for making this regulation effective in less than 30 days after publication in the **Federal Register**. National security officials warn that future terrorist attacks against high visibility civilian targets, including dams and power plants, may be anticipated. The measures contemplated by the rule are intended to prevent future terrorist attacks against Reclamation lands, facilities, and waters, and to protect visitors to and population centers adjacent to these lands, facilities, and waters. In addition, the rule is necessary to deal with a large increase in tourism and visitation to Reclamation lands, facilities, and recreation areas with the coming of Spring, Reclamation Centennial activities, and other upcoming events. To delay the effective date of this rule is impractical and contrary to the public interest because it may render individuals and facilities vulnerable to subversive activity, sabotage, or terrorist attack. Immediate action is required to accomplish these objectives. The regulations will expire one year from the date they take effect, which will be the date of publication. Reclamation will accept and consider comments on this rule for 60 days after the date of publication. Reclamation is in the process of developing a more comprehensive public conduct rule, and it will use comments received on this rule in finalizing the comprehensive rule.

III. Procedural Matters

National Environmental Policy Act

We have analyzed this rule in accordance with the criteria of the National Environmental Policy Act and Department Manual 516 DM. This rule does not constitute a major Federal action significantly affecting the quality of the human environment. An environmental assessment is not required. The rule is categorically excluded from NEPA review under 40 CFR 1508.4, Departmental Manual 516 DM 2, Appendix 1, paragraph 1.10.

Executive Order 12866, Regulatory Planning and Review

Under Executive Order (E.O.) 12866, (58 FR 51735, Oct. 4, 1993), an agency must determine whether a regulatory action is significant and therefore subject to Office of Management and Budget (OMB) review and the requirements of the E.O. Executive Order 12866 defines a ''significant regulatory action'' as a regulatory action meeting any one of four criteria specified in the E.O. This rulemaking is considered a significant regulatory action under criterion number 4, because it raises novel legal or policy issues arising out of legal mandates, the President's priorities, or the principles set forth in the E.O. We have therefore submitted the regulation to OMB for review.

Regulatory Flexibility Act

The Department of the Interior certifies that this document will not have a significant economic effect on a substantial number of small entities under the Regulatory Flexibility Act (5 U.S.C. 601 et seq). A Regulatory Flexibility Analysis is not required. Accordingly, a Small Entity Compliance Guide is not required.

Small Business Regulatory Enforcement Fairness Act

This rule is not a major rule under 5 U.S.C. 804(2), the Small Business Regulatory Fairness Act. The rule:

(1) Will not have an annual effect on the economy of $100 million or more.

(2) Will not cause a major increase in costs or prices for consumers, individual industries, Federal, State, or local government agencies, or geographic regions.

(3) Will not have significant adverse effects on competition, employment, investment, productivity, innovation, or

the ability of U.S.-based enterprises to compete with foreign-based enterprises.

Unfunded Mandates Reform Act of 1995

This rule does not impose an unfunded mandate on State, local, or tribal governments or the private sector of more than $100 million per year. Moreover, the rule does not have a significant or unique effect on State, local, or tribal governments or the private sector. A statement containing the information required by the Unfunded Mandates Reform Act (2 U.S.C. 1531 et seq) is not required.

Executive Order 12630, Takings

In accordance with Executive Order 12630, the rule does not have significant takings implications. Thus, a takings implication assessment is not required. This rule only addresses the possible consequences of public conduct on Reclamation lands and Reclamation projects.

Paperwork Reduction Act

This rule does not require any information collection under the Paperwork Reduction Act. Therefore, an OMB Form 83–I is not required.

Executive Order 13132, Federalism

In accordance with Executive Order 13132, this rule does not have Federalism implications. A Federalism assessment is not required. The rule will not affect the roles, rights, and responsibilities of States in any way. The rule will not result in the Federal Government taking control of traditional State responsibilities, nor will it interfere with the ability of States to formulate their own policies. In addition, the rule will not affect the distribution of power, the responsibilities among the various levels of government, nor preempt State law.

Executive Order 12988, Civil Justice Reform

In accordance with Executive Order 12988, the Department's Office of the Solicitor has determined that this rule does not unduly burden the judicial system and meets the requirements of section 3(a) and 3(b)(2) of the Executive Order.

Executive Order 13211, Energy Impacts

In accordance with Executive Order 13211, the rule will not have a significant adverse effect on the supply, distribution, and use of energy. Therefore, a Statement of Energy Effects is not required.

IV. Comments on this Rule

If you wish to comment on this rule, you may submit your comments by one of two methods. You may mail comments to: Bureau of Reclamation, P.O. Box 25007, Denver, CO 80403, Attn: Diana Trujillo, D–5300. You may also hand-deliver comments to the Bureau of Reclamation, Denver Federal Center, 6th and Kipling, Building 67, Room 124, Lakewood, Colorado. Our practice is to make comments, including names and home addresses of respondents, available for public review during regular business hours. Individual respondents may request that we withhold their home address from the rulemaking record. We will honor the request to the extent allowable by law. There also may be circumstances in which we would withhold from the rulemaking record a respondent's identity, as allowable by law. If you wish us to withhold your name and/or address, you must state this prominently at the beginning of your comment. However, we will not consider anonymous comments. We will make all submissions from organizations or businesses, and from individuals identifying themselves as representatives or officials of organizations or businesses, available for public inspection in their entirety.

List of Subjects in 43 CFR Part 423

Law Enforcement, Public Conduct, Reclamation Lands and Reclamation Projects.

Dated: April 3, 2002.

Bennett W. Raley,

Assistant Secretary—Water and Science.

For the reasons stated in the preamble, the Bureau of Reclamation amends title 43 of the Code of Federal Regulations by adding a new part 423 to read as follows:

PART 423—PUBLIC CONDUCT ON RECLAMATION LANDS AND PROJECTS

Sec.

423.1 Purpose and applicability of this part.
423.2 Definitions of terms used in this part
423.3 Prohibition of trespassing, tampering, and vandalism.
423.4 Restrictions on water vessel operation.
423.5 Applicability of State law to vehicle operation.
423.6 Restrictions on weapons.
423.7 Prohibition of disorderly conduct.
423.8 Prohibition on interfering with agency functions.
423.9 Prohibition of explosives.
423.10 Criminal penalty for violations of this part.

Authority: 43 U.S.C. 373b, 16 U.S.C. 460 l–31

§ 423.1 Purpose and applicability of this part.

The purpose of this part is to maintain law and order and protect persons and property on Reclamation lands, as defined in this part and at Reclamation projects as defined in this part. This part shall not apply where the Federal government has no ownership interest.

§ 423.2 Definitions of terms used in this part.

Disorderly conduct means committing any of the following acts with the intent to cause or create a risk of public alarm, nuisance, jeopardy or violence:

(1) Fighting or threatening, or violent behavior;

(2) Language, utterance, gesture, or display or act that is obscene, physically threatening or menacing, or that is likely to inflict injury or incite an immediate breach of the peace;

(3) Unreasonable noise, considering the nature and purpose of the person's conduct, location, time of day or night, and other factors that would govern the conduct of a reasonably prudent person under the circumstances; or

(4) Creating or maintaining a hazardous or physically offensive condition.

Reclamation means the Bureau of Reclamation of the United States Department of the Interior.

Reclamation lands means all real property administered by the Commissioner of Reclamation, and includes all acquired and withdrawn lands and water areas under the jurisdiction of Reclamation.

Reclamation projects means any water supply projects or water delivery projects constructed or administered by Reclamation under the Federal reclamation laws, and Acts supplementary thereto and amendatory thereof.

Vehicle means every device in, upon, or by which a person or property is or may be transported or drawn on land, except devices moved by human power or used exclusively upon stationary rails or track.

Vessel means every type or description of craft that is used or capable of being used as a means of transportation on water. Any buoyant device that permits or is capable of free flotation is a vessel. A seaplane is not a vessel.

Weapon means any of the following:

(1) A firearm, which is a loaded or unloaded pistol, rifle, shotgun or other device which is designed to, or may be readily converted to expel a projectile by the ignition of a propellant;

(2) A compressed gas or spring-powered pistol or rifle, irritant gas device, explosive device; or

(3) Any other implement designed to discharge missiles.

§ 423.3 Prohibition of trespassing, tampering, and vandalism.

(a) The following activities are prohibited:

(1) *Trespassing,* entering, or remaining in or upon property or real property not open to the public (closed area), except with the express invitation or consent of the person having lawful control of the property, real property, or water;

(2) *Tampering* or attempting to tamper with property or real property, or moving, manipulating, or setting in motion any of the parts thereof, except when such property is under one's lawful control or possession; and

(3) *Vandalism* or destroying, injuring, defacing, or damaging property or real property that is not under one's lawful control or possession.

(b) Reclamation reserves the right to close and restrict public access to Reclamation lands and Reclamation projects subject to this part for security or public safety reasons. Each closure order or order restricting public access must:

(1) Identify the facilities, lands or waters that are closed or restricted as to public use;

(2) Specify the uses that are restricted;

(3) Specify the period of time during which the closure or restriction shall apply (including indefinite periods, if necessary); and

(4) Be posted at places near or within the area to which the closure or restriction applies, in such manner and location as is reasonable to bring prohibitions to the attention of the public.

(c) Within 15 days of the beginning of the closure or restriction, Reclamation will publish the closure or restriction in the **Federal Register**, unless the Commissioner determines that publication is contrary to national security or the public interest.

§ 423.4 Restrictions on water vessel operation.

The following are prohibited:

(a) Operating a vessel in a closed area;

(b) Failing to observe restrictions established by a regulatory marker (i.e., signs, buoys);

(c) Operating a vessel, or knowingly allowing another person to operate a vessel, in a reckless or negligent manner, or in a manner that endangers or is likely to endanger a person or property; and

(d) Operating a vessel when under the influence of alcohol or legally-used controlled substance that may endanger life or property.

§ 423.5 Applicability of State law to vehicle operation.

Any person operating a vehicle within Reclamation lands or Reclamation projects is subject to State laws in effect at the time.

§ 423.6 Restrictions on weapons.

(a) Carrying or possessing a weapon in violation of applicable Federal or State law is prohibited.

(b) Discharge of a weapon, except where allowed by State law, is prohibited.

(c) Authorized Federal, State, local and tribal law enforcement officers may carry and use weapons in the performance of their official duties.

§ 423.7 Prohibition of disorderly conduct.

Disorderly conduct is prohibited.

§ 423.8 Prohibition on interfering with agency functions.

The following are prohibited:

(a) Threatening, resisting, intimidating, or intentionally interfering with a government employee or agent engaged in an official duty, or on account of the performance of an official duty;

(b) Violating the lawful order of a government employee or agent authorized to maintain order and control public access and movement during law enforcement actions, and emergency operations that involve a threat to public safety or Reclamation resources, or other activities where the control of public movement and activities is necessary to maintain order and public safety;

(c) Knowingly giving a false or fictitious report or other false information to an authorized person investigating an accident or violation of law or regulation; and

(d) Knowingly giving a false report or false information for the purpose of misleading a government employee or agent in the conduct of official duties.

§ 423.9 Prohibition of explosives.

Using, possessing, storing, or transporting explosives, blasting agents, or explosive materials is prohibited except as allowed by State and Federal law and as authorized by Reclamation.

§ 423.10 Criminal penalty for violations of this part.

In accordance with Section 1(b) of Public Law 107–69, anyone responsible for violation of the provisions of this part is subject to a fine under subchapter 227, subchapter C of title 18 United States Code, can be imprisoned for not more than 6 months, or both.

[FR Doc. 02–9373 Filed 4–16–02; 8:45 am]

BILLING CODE 4310–MN–P

Federal Register

Wednesday,
April 17, 2002

Part V

The President

Proclamation 7540—Pan American Day and Pan American Week, 2002

Proclamation 7541—Jewish Heritage Week, 2002

Federal Register
Vol. 67, No. 74
Wednesday, April 17, 2002

Presidential Documents

Title 3—

The President

Proclamation 7540 of April 12, 2002

Pan American Day and Pan American Week, 2002

By the President of the United States of America

A Proclamation

Pan America comprises a set of regional relationships that connects the nations of the Western Hemisphere in an increasingly interdependent network of commercial and cultural communities. Every nation in Pan America, with one notable exception, is committed to promoting freedom, democracy, and the rule of law. Over the past year, the Pan American nations have become increasingly united in purpose, seeking to ensure the preservation of the freedoms inherent in democracy, to promote good governance, to enhance economic development across the hemisphere, to protect human rights, and to combat terrorism, transnational crime, and narcotics trafficking. Continued progress in achieving these goals will greatly improve the future of the Americas.

As a testament to the enduring spirit of cooperation that binds us together as citizens of North, Central, and South America, the Pan American nations have built a common front against the threat of terrorism. Meeting in consultation on September 19, 2001, the Organization of American States (OAS) Permanent Council invoked the Rio Treaty, declaring that the terrorist attacks of September 11, were attacks against all of the Americas. Later that same month, the OAS Foreign Ministers called for measures to strengthen hemispheric cooperation and adopted binding commitments, demonstrating that this hemisphere is prepared to guard the freedoms that form the foundation of democracy.

This firm response to the terrorist acts followed another milestone for the region, namely, the adoption of the Inter-American Democratic Charter. In approving this document by acclamation, the nations of the Western Hemisphere established democracy as the birthright of every person in the Americas. The words of this charter affirm that governments cannot be democracies in name only, but must build upon the guiding principles of our time and struggle to ensure the preservation of essential civil liberties.

Pan America's unprecedented spirit of cooperation bodes well for the 2004 Summit of the Americas, when we will have the opportunity to review our progress and renew commitments to enhancing hemispheric relationships. Communication, trade, travel, and advances in technology have all combined to produce unprecedented levels of integration and interdependence in the Western Hemisphere. And our continued efforts toward a Free Trade Area of the Americas exemplify our commitment to building a legal framework that opens the way to self-sustaining and wide-ranging prosperity. The free exchange of ideas and goods brings a unique vitality to our region, and serves as a catalyst for continuing economic development at the local and national levels.

This past year provided sobering evidence that our freedoms are not free. We must continue to work together as a unified community to support and defend all peoples that are denied their rights and privileges by governments that fail to respect the essential elements of democracy and human rights. In countering the threats of tyranny, poverty, and lawlessness, our collective goal must be to further the partnership we share as standard bearers of a bold vision. By working together to promote democracy, free

trade, economic prosperity, effective governance, and human rights, we will keep the new Pan American spirit of freedom and cooperation alive and well for generations to come.

NOW, THEREFORE, I, GEORGE W. BUSH, President of the United States of America, by virtue of the authority vested in me by the Constitution and laws of the United States, do hereby proclaim April 14, 2002, as Pan American Day and April 14 through April 20, 2002, as Pan American Week. I urge the Governors of the 50 States, the Governor of the Commonwealth of Puerto Rico, and the officials of other areas under the flag of the United States of America to honor these observances with appropriate ceremonies and activities.

IN WITNESS WHEREOF, I have hereunto set my hand this twelfth day of April, in the year of our Lord two thousand two, and of the Independence of the United States of America the two hundred and twenty-sixth.

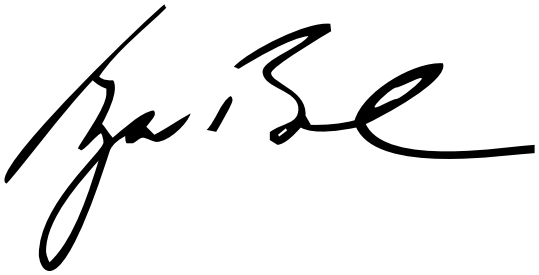

[FR Doc. 02–9606
Filed 4–16–02; 8:45 am]
Billing code 3195–01–P

Presidential Documents

Proclamation 7541 of April 12, 2002

Jewish Heritage Week, 2002

By the President of the United States of America

A Proclamation

Throughout our Nation's history, America has benefited from a greatly diverse population, comprising a vibrant mix of ideas, religions, national origins, and ethnic backgrounds. And from this mix, we have inherited a Nation based on democratic principles, free enterprise, and the freedom to pursue a better way of life.

Jewish Americans have played an important part in the success of the American experience. They have dedicated themselves to the challenges of building a better America; and their patriotism, hard work, and faithful commitment to community and family have enriched our culture and improved our country.

Since our Nation's founding, millions of Jews have immigrated to America, embracing the promise of opportunity and tolerance that forms the heart of the American dream. Jews fled persecution, pogroms, and the horrors of deadly prejudice to begin new lives where they could worship in freedom, prosper in society, and realize their dreams in peace. They also brought with them a spirit of faith and a strong work ethic that enhanced our culture and promoted national prosperity.

The Jewish community in America has helped shape our Nation's heritage and further our efforts toward building a land where all people can live free and be treated equally under the law. As entrepreneurs and public servants, scholars and philanthropists, and countless other callings, Jewish Americans have provided wisdom, energy, and leadership wherever they settled and in whatever calling they followed.

During the early days of our Republic, President George Washington wrote to the Hebrew congregations of Philadelphia, New York, Charleston, and Richmond, to say that ''The power and goodness of the Almighty were strongly manifested in the events of the late glorious revolution: and His kind interposition in our behalf, has been no less visible in the establishment of our present equal government. In war He directed the sword, and in peace He has ruled in our councils.'' President Washington's message is equally applicable today, as we engage in our war against terrorism and work to establish a lasting peace in the Middle East.

In celebrating Jewish Heritage Week, we reflect with joy upon the many contributions Jewish Americans have made to the arts, education, industry, science, and our very way of life. The values and traditions of Judaism have contributed greatly to our culture and history; and they have played a major role in the success of our great Nation.

NOW, THEREFORE, I, GEORGE W. BUSH, President of the United States of America, by virtue of the authority vested in me by the Constitution and laws of the United States, do hereby proclaim April 14 through 21, 2002, as Jewish Heritage Week. I urge all Americans to learn about the history of Jewish Americans and to participate in activities that highlight the accomplishments of these citizens.

IN WITNESS WHEREOF, I have hereunto set my hand this twelfth day of April, in the year of our Lord two thousand two, and of the Independence of the United States of America the two hundred and twenty-sixth.

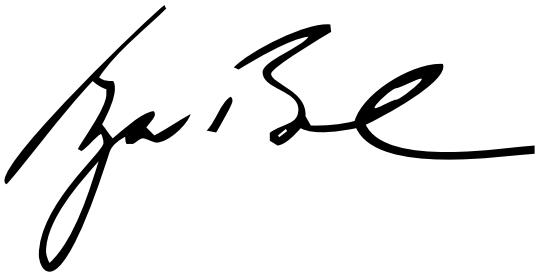

[FR Doc. 02–9607
Filed 4–16–02; 8:45 am]
Billing code 3195–01–P

Reader Aids

Federal Register

Vol. 67, No. 74

Wednesday, April 17, 2002

CUSTOMER SERVICE AND INFORMATION

Federal Register/Code of Federal Regulations	
General Information, indexes and other finding aids	**202–523–5227**
Laws	**523–5227**
Presidential Documents	
Executive orders and proclamations	**523–5227**
The United States Government Manual	**523–5227**
Other Services	
Electronic and on-line services (voice)	**523–3447**
Privacy Act Compilation	**523–3187**
Public Laws Update Service (numbers, dates, etc.)	**523–6641**
TTY for the deaf-and-hard-of-hearing	**523–5229**

ELECTRONIC RESEARCH

World Wide Web

Full text of the daily Federal Register, CFR and other publications is located at: **http://www.access.gpo.gov/nara**

Federal Register information and research tools, including Public Inspection List, indexes, and links to GPO Access are located at: **http://www.nara.gov/fedreg**

E-mail

FEDREGTOC-L (Federal Register Table of Contents LISTSERV) is an open e-mail service that provides subscribers with a digital form of the Federal Register Table of Contents. The digital form of the Federal Register Table of Contents includes HTML and PDF links to the full text of each document.

To join or leave, go to **http://listserv.access.gpo.gov** and select *Online mailing list archives, FEDREGTOC-L, Join or leave the list (or change settings);* then follow the instructions.

PENS (Public Law Electronic Notification Service) is an e-mail service that notifies subscribers of recently enacted laws.

To subscribe, go to **http://hydra.gsa.gov/archives/publaws-l.html** and select *Join or leave the list* (or change settings); then follow the instructions.

FEDREGTOC-L and **PENS** are mailing lists only. We cannot respond to specific inquiries.

Reference questions. Send questions and comments about the Federal Register system to: **info@fedreg.nara.gov**

The Federal Register staff cannot interpret specific documents or regulations.

FEDERAL REGISTER PAGES AND DATE, APRIL

15333–15462 1
15463–15706 2
15707–16010 3
16011–16284 4
16285–16626 5
16627–16968 8
16969–17278 9
17279–17602 10
17603–17904 11
17905–18084 12
18085–18460 15
18461–18772 16
18773–19100 17

CFR PARTS AFFECTED DURING APRIL

At the end of each month, the Office of the Federal Register publishes separately a List of CFR Sections Affected (LSA), which lists parts and sections affected by documents published since the revision date of each title.

3 CFR

Executive Orders:
12473 (See EO 13262) 18773
13262 18773

Proclamations:
7536 17599
7537 17601
7538 17905
7539 18083
7540 19097
7541 19099

Administrative Orders:
Presidential Determinations:
No. 2002–12 of April 1, 2002 18461

5 CFR

410 15463
550 15463
551 15463
630 15463
1600 17603
1650 17603

7 CFR

300 18463
301 .....18463, 18464
318 18463
319 18463
353 18463
400 16285
401 16285
403 16285
405 16285
406 16285
409 16285
414 16285
415 16285
416 16285
422 16285
425 16285
430 16285
433 16285
435 16285
437 16285
441 16285
443 16285
445 16285
446 16285
447 16285
450 16285
451 16285
454 16285
455 16285
456 16285
458 16285
916 16286
917 16286
989 15707
1210 17907
1280 17848
1703 16011
1714 16969
3565 16969

Proposed Rules:
500 17301
905 15339
920 .....15339, 18517
927 15747
1205 15495
1219 17018
1710 17018

8 CFR

214 18062
248 18062
286 15333

Proposed Rules:
214 18065
235 18065
248 18065
286 15753

9 CFR

53 17605
72 .....17605, 18466
94 15334
113 15711

Proposed Rules:
Ch. III 15501
113 16327

10 CFR

20 16298

Proposed Rules:
50 16654
170 17490
171 17490
430 17304
710 16061
824 15339

12 CFR

3 16971
208 16971
225 16971
226 16980
264a 15335
304 18793
325 16971
567 16971
609 16627
611 17907
614 17907
620 16627
951 18796
985 18806

Proposed Rules:
563b 17230
574 17230
575 17230

13 CFR

Proposed Rules:
121.....16063, 17020

14 CFR

Ch. VI.....17258
23.....18807
39 .....15468, 15470, 15472, 15473, 15475, 15476, 15714, 15717, 16011, 16983, 16987, 16991, 16994, 17279, 17917, 17923, 17929, 17931, 17934, 18810, 18813, 18815
71 .....15478, 15479, 18059, 18467, 18817
97.....16013, 16014
330.....18468
1300.....17258
1310.....17258

Proposed Rules:
25.....16329, 16656
39 .....15755, 15758, 15760, 15762, 15763, 16064, 16067, 16069, 16330, 16331, 16333, 16335, 17305, 17306, 18141
71 .....15502, 15503, 15504, 18517
382.....17308

16 CFR

305.....17936
312.....18818

Proposed Rules:
310.....15767

18 CFR

Proposed Rules:
Ch. 1.....16071

19 CFR

181.....15480
191.....16634

Proposed Rules:
141.....16664
142.....16664

21 CFR

173.....15719
201.....16304
330.....16304
331.....16304
341.....16304
346.....16304
355.....16304
358.....16304
369.....16304
510.....17282
520.....17284
522 .....17282, 18085, 18086
701.....16304

Proposed Rules:
184.....18834
212.....15344
872.....16338

22 CFR

41.....18821
62.....17611

Proposed Rules:
213.....17655

24 CFR

3284.....18398

26 CFR

1.....18988
54.....18988
602.....18988

Proposed Rules:
1 .....17309, 18834, 18835
301.....18839

27 CFR

20.....17937
252.....18086

Proposed Rules:
4.....17312

28 CFR

89.....17027

29 CFR

1926.....18091
1979.....15454
2520.....17264
2700.....18485
4022.....16950, 18112
4022B 16950
4044.....16950, 18112

Proposed Rules:
552.....16668, 17760
1926.....18145

30 CFR

75.....18822

Proposed Rules:
936.....16341
938.....18518

31 CFR

210.....17896
Ch. V.....16308

32 CFR

199 .....15721, 18114, 18825
326.....17616
505.....17618
706 .....18485, 18487, 18488, 18489, 18490, 18491
806b.....17619
935.....16997

Proposed Rules:
199.....17948

33 CFR

100.....17621, 17622
117.....18492
140.....18493
165 .....15484, 15744, 16016, 17284, 17667, 18523

Proposed Rules:
100.....17665
117.....16016, 18521
147.....15505
165 .....15507, 16668, 17314
167.....18527

34 CFR

Proposed Rules:
34.....18072

36 CFR

703.....16018
1254.....17286

Proposed Rules:
1190.....15509
1191.....15509
1253.....18146

37 CFR

Proposed Rules:
201.....18148

38 CFR

Ch. 1.....16023
20.....16309

39 CFR

111.....18684
224.....16023
229.....16023
230.....16024
233.....16023
266.....16023
273.....16023

Proposed Rules:
111.....18842

40 CFR

52 .....15335, 15336, 16026, 16638, 16640, 16642, 16644, 17007, 17286, 17624, 17939, 18115, 18493, 18497
62.....17944
63 .....15486, 16317, 16582, 16614, 17762, 17824
81.....16646, 17939
148.....16262
180 .....15727, 16027, 17631
261.....16262
268.....16262, 17119
271.....16262, 17636
302.....16262
721.....17643
745.....15489

Proposed Rules:
9.....17122
51.....17954, 18528
52 .....15345, 16669, 17317, 17669, 17954, 17955, 18149, 18528, 18547
55.....17955
62.....17321, 17961
63 .....15510, 15674, 16154, 16343, 16625, 17492
70.....15767
81.....17955
96.....17954
97.....17954
122.....17122
123.....17122
124.....17122
125.....17122
141.....19030
180.....16073, 18150
228.....15348
261.....18528
262.....18528
264.....18528
265.....18528
270.....18528
721.....16345
1603.....16670

41 CFR

101-25.....17649
301-10.....17946
301-53.....17946

42 CFR

68c.....17650

43 CFR

423.....19092
3130.....17866
3160.....17866
3430.....17962
3470.....17962
3800.....17962

44 CFR

64.....16030

45 CFR

Proposed Rules:
701.....17528
702.....17528
703.....17528
704.....17528
705.....17528
706.....17528
707.....17528
708.....17528
1626.....18845
2551.....18846
2552.....18847

46 CFR

Proposed Rules:
356.....18547

47 CFR

0.....18827
1 .....16647, 17009, 18827
2.....17009, 17288
11.....18502
25.....17288
26.....17009
36.....17013
52.....16322
54.....15490, 17014
61.....17009
63.....18827
69.....15490, 17009
73 .....15493, 15735, 15736, 16651, 16652, 17014, 17654, 18832
74.....16652
76.....17015
87.....17288
90.....16652

Proposed Rules:
0.....18560
1 .....17036, 17325, 18560
2.....16683, 17038
25.....16347
52.....16347
61.....17036
69.....17036
73 .....15768, 15769, 16350, 16351, 16673, 16706, 17041, 17669, 17670, 17963
74.....16683
76.....18848
80.....16683
90.....16351, 16683
97.....16683

48 CFR

1823.....17016
1836.....17016
1852.....17016

Proposed Rules:
27.....17278
52.....17278
203.....18160
208.....15351
216.....15351
225.....18161

49 CFR

171.....15736
172.....15736

173.....15736
174.....15736
176.....15736
178.....15736
180.....15736
229.....16032
232.....17556
533.....16052
659.....15725

Proposed Rules:
171.....15510
172.....15510
173.....15510
175.....15510
191.....16355
192.....16355
195.....16355
567.....15769
571.....15769
574.....15769
575.....15769

50 CFR

17.....15337, 18356
223.....18833
229.....15493
600.....15338
660 .....15338, 16322, 16323, 18117, 18512
679.....16325, 18129

Proposed Rules:
17 .....15856, 16492, 18572
92.....16707
600.....15516
622.....16359
635.....17349
648.....16079, 16362
660 .....17353, 17354, 18576
679.....15517

REMINDERS

The items in this list were editorially compiled as an aid to Federal Register users. Inclusion or exclusion from this list has no legal significance.

RULES GOING INTO EFFECT APRIL 17, 2002

COMMERCE DEPARTMENT

National Oceanic and Atmospheric Administration

Fishery conservation and management:

West Coast States and Western Pacific fisheries—

Precious corals; published 3-18-02

ENERGY DEPARTMENT

Federal Energy Regulatory Commission

Natural Gas Policy Act

Interstate natural gas pipelines—

Business practice standards; published 3-18-02

FEDERAL DEPOSIT INSURANCE CORPORATION

Practice and procedure:

Forms, instructions, and reports; technical amendments; published 4-17-02

FEDERAL TRADE COMMISSION

Hart-Scott-Rodino Antitrust Improvements Act:

Premerger notification; reporting and waiting period requirements; published 3-18-02

Correction; published 3-26-02

HEALTH AND HUMAN SERVICES DEPARTMENT

Inspector General Office, Health and Human Services Department

Medicare and Federal health care programs:

Revisions and technical corrections; published 3-18-02

INTERIOR DEPARTMENT

Reclamation Bureau

Public conduct on reclamation lands and projects; published 4-17-02

NATIONAL SCIENCE FOUNDATION

Research misconduct policy; published 3-18-02

STATE DEPARTMENT

Visas; nonimmigrant documentation:

INTELSAT; addition as international organization

Clarification of status of organization and personnel affected; published 4-17-02

TRANSPORTATION DEPARTMENT

Federal Aviation Administration

Airworthiness directives:

Boeing; published 4-2-02

COMMENTS DUE NEXT WEEK

AGRICULTURE DEPARTMENT

Animal and Plant Health Inspection Service

Livestock and poultry disease control:

Bovine tuberculosis; indemnity payment for destroyed animals; comments due by 4-22-02; published 2-20-02 [FR 02-04059]

AGRICULTURE DEPARTMENT

Food and Nutrition Service

Food distribution programs:

Poultry substitution and commodity inventory controls for recipient agencies; codification and modification; comments due by 4-22-02; published 2-21-02 [FR 02-04174]

COMMERCE DEPARTMENT

National Oceanic and Atmospheric Administration

Fishery conservation and management:

Caribbean, Gulf of Mexico, and South Atlantic fisheries—

Gulf of Mexico shrimp; comments due by 4-22-02; published 4-5-02 [FR 02-08189]

ENVIRONMENTAL PROTECTION AGENCY

Air pollutants, hazardous; national emission standards:

Pesticide active ingredient production; comments due by 4-22-02; published 3-22-02 [FR 02-06975]

ENVIRONMENTAL PROTECTION AGENCY

Air pollutants, hazardous; national emission standards:

Pesticide active ingredient production; comments due by 4-22-02; published 3-22-02 [FR 02-06976]

Publicly owned treatment works; comments due by 4-22-02; published 3-22-02 [FR 02-06847]

ENVIRONMENTAL PROTECTION AGENCY

Air quality implementation plans; approval and promulgation; various States:

Missouri; comments due by 4-24-02; published 3-25-02 [FR 02-07092]

ENVIRONMENTAL PROTECTION AGENCY

Air quality implementation plans; approval and promulgation; various States:

Missouri; comments due by 4-24-02; published 3-25-02 [FR 02-07093]

Hazardous waste:

Identification and listing—

Exclusions; comments due by 4-22-02; published 3-7-02 [FR 02-05314]

Water pollution; effluent guidelines for point source categories:

Meat and poultry products processing facilities; comments due by 4-26-02; published 2-25-02 [FR 02-02838]

FEDERAL COMMUNICATIONS COMMISSION

Digital television stations; table of assignments:

Maine; comments due by 4-22-02; published 3-4-02 [FR 02-04980]

Practice and procedure:

Regulatory fees (2002 FY); assessment and collection; comments due by 4-23-02; published 4-10-02 [FR 02-08600]

Radio stations; table of assignments:

California; comments due by 4-22-02; published 3-19-02 [FR 02-06374]

New Mexico; comments due by 4-22-02; published 3-18-02 [FR 02-06372]

FEDERAL MARITIME COMMISSION

Filing and service fees; revision; comments due by 4-22-02; published 3-21-02 [FR 02-06742]

HEALTH AND HUMAN SERVICES DEPARTMENT

Centers for Medicare & Medicaid Services

Medicare:

Special Payment Provisions and Standards for Prosthetics and Custom-Fabricated Orthotics Suppliers Negotiated Rulemaking Committee—

Intent to establish; comments due by 4-22-02; published 3-22-02 [FR 02-06952]

HEALTH AND HUMAN SERVICES DEPARTMENT

Food and Drug Administration

Medical devices:

Clinical chemistry and toxicology devices—

Cyclosporine and tacrolimus assays; reclassification; comments due by 4-22-02; published 2-21-02 [FR 02-04208]

HEALTH AND HUMAN SERVICES DEPARTMENT

Privacy Act; implementation:

Individually identifiable health information; privacy standards; comments due by 4-26-02; published 3-27-02 [FR 02-07144]

INTERIOR DEPARTMENT

Indian Affairs Bureau

Trust management reform:

Outdated rules repeal; comments due by 4-22-02; published 2-21-02 [FR 02-04106]

INTERIOR DEPARTMENT

Land Management Bureau

Public administrative procedures:

Conveyances, disclaimers, and correction documents—

Recordable disclaimers of interest in land; amendments; comments due by 4-23-02; published 2-22-02 [FR 02-04137]

INTERIOR DEPARTMENT

Fish and Wildlife Service

Endangered and threatened species:

Flat-tailed horned lizard; comments due by 4-25-02; published 12-26-01 [FR 01-31734]

INTERIOR DEPARTMENT

Surface Mining Reclamation and Enforcement Office

Permanent program and abandoned mine land reclamation plan submissions:

Oklahoma; comments due by 4-22-02; published 4-5-02 [FR 02-08231]

INTERNATIONAL TRADE COMMISSION

Practice and procedure:

Investigations relating to global and bilateral

safeguard actions, market disruption, and relief actions review; comments due by 4-23-02; published 2-22-02 [FR 02-04186]

JUSTICE DEPARTMENT

Drug Enforcement Administration

Schedules of controlled substances:

Buprenorphine; placement into Schedule III; comments due by 4-22-02; published 3-21-02 [FR 02-06767]

Correction; comments due by 4-22-02; published 3-28-02 [FR C2-06767]

JUSTICE DEPARTMENT

Immigration and Naturalization Service

Immigration:

Visa waiver pilot program—

Argentina; termination; correction; comments due by 4-22-02; published 3-6-02 [FR C2-04260]

Visa waiver pilot program; designations, etc.—

Argentina; comments due by 4-22-02; published 2-21-02 [FR 02-04260]

INTERIOR DEPARTMENT

National Indian Gaming Commission

Electronic or electromechanical facsimile; games similar to bingo; and electronic, computer, or other technologic aids to Class II games; definitions; comments due by 4-22-02; published 3-22-02 [FR 02-06806]

NUCLEAR REGULATORY COMMISSION

Fee schedules revision; fee recovery (2002 FY); comments due by 4-26-02; published 3-27-02 [FR 02-07114]

NUCLEAR REGULATORY COMMISSION

Spent nuclear fuel; storage casks; HI-STORM 100; comments due by 4-26-02; published 3-27-02 [FR 02-07320]

NUCLEAR REGULATORY COMMISSION

Spent nuclear fuel; storage casks; HI-STORM 100; comments due by 4-26-02; published 3-27-02 [FR 02-07321]

TRANSPORTATION DEPARTMENT

Coast Guard

Drawbridge operations:

Florida; comments due by 4-22-02; published 2-21-02 [FR 02-04204]

Texas; comments due by 4-22-02; published 2-21-02 [FR 02-04207]

Ports and waterways safety:

Naval vessels; protection zones; comments due by 4-22-02; published 2-21-02 [FR 02-04205]

Potomac River, Washington Channel, Washington, DC; security zone; comments due by 4-22-02; published 3-20-02 [FR 02-06764]

TRANSPORTATION DEPARTMENT

Federal Aviation Administration

Air traffic operating and flight rules, etc.:

Airports in Washington, DC metropolitan area; enhanced security procedures for operations; comments due by 4-22-02; published 2-19-02 [FR 02-03846]

TRANSPORTATION DEPARTMENT

Federal Aviation Administration

Airworthiness directives:

Bombardier; comments due by 4-22-02; published 3-21-02 [FR 02-06794]

TRANSPORTATION DEPARTMENT

Federal Aviation Administration

Airworthiness directives:

Cirrus Design Corp.; comments due by 4-26-02; published 3-13-02 [FR 02-05703]

TRANSPORTATION DEPARTMENT

Federal Aviation Administration

Airworthiness directives:

Honeywell; comments due by 4-22-02; published 2-19-02 [FR 02-03877]

TRANSPORTATION DEPARTMENT

Federal Aviation Administration

Class E airspace; comments due by 4-22-02; published 3-11-02 [FR 02-05633]

TRANSPORTATION DEPARTMENT

Federal Aviation Administration

Class E airspace; comments due by 4-25-02; published 3-11-02 [FR 02-05813]

TRANSPORTATION DEPARTMENT

Federal Aviation Administration

Class E airspace; correction; comments due by 4-22-02; published 3-15-02 [FR C2-05633]

TRANSPORTATION DEPARTMENT

Research and Special Programs Administration

Hazardous materials transportation:

Regulatory Flexibility Act Section 610 and plain language reviews; comments due by 4-25-02; published 1-25-02 [FR 02-01862]

Hazardous materials:

Materials transported by aircraft; information availability; comments due by 4-26-02; published 2-13-02 [FR 02-03458]

TRANSPORTATION DEPARTMENT

Transportation Security Administration

Aviation security infrastructure fees; comments due by 4-22-02; published 3-20-02 [FR 02-06852]

TRANSPORTATION DEPARTMENT

Transportation Security Administration

Security programs for aircraft 12,500 pounds or more; comments due by 4-23-02; published 2-22-02 [FR 02-04235]

TREASURY DEPARTMENT

Internal Revenue Service

Income taxes, etc.:

Statutory stock options; Federal Insurance Contributions Act, Federal Unemployment Tax Act, and income tax collection at source; application

Correction; comments due by 4-23-02; published 2-4-02 [FR 02-02417]

Income taxes:

Individuals not filing joint returns; community income treatment; comments due by 4-22-02; published 1-22-02 [FR 02-01385]

LIST OF PUBLIC LAWS

This is a continuing list of public bills from the current session of Congress which have become Federal laws. It may be used in conjunction with ''P L U S'' (Public Laws Update Service) on 202–523–6641. This list is also available online at *http://www.nara.gov/fedreg/plawcurr.html*.

The text of laws is not published in the **Federal Register** but may be ordered in ''slip law'' (individual pamphlet) form from the Superintendent of Documents, U.S. Government Printing Office, Washington, DC 20402 (phone, 202–512–1808). The text will also be made available on the Internet from GPO Access at *http://www.access.gpo.gov/nara/nara005.html*. Some laws may not yet be available.

H.R. 1499/P.L. 107–157

District of Columbia College Access Improvement Act of 2002 (Apr. 4, 2002; 116 Stat. 118)

H.R. 2739/P.L. 107–158

To amend Public Law 107-10 to authorize a United States plan to endorse and obtain observer status for Taiwan at the annual summit of the World Health Assembly in May 2002 in Geneva, Switzerland, and for other purposes. (Apr. 4, 2002; 116 Stat. 121)

H.R. 3985/P.L. 107–159

To amend the Act entitled ''An Act to authorize the leasing of restricted Indian lands for public, religious, educational, recreational, residential, business, and other purposes requiring the grant of long-term leases'', approved August 9, 1955, to provide for binding arbitration clauses in leases and contracts related to reservation lands of the Gila River Indian Community. (Apr. 4, 2002; 116 Stat. 122)

Last List April 3, 2002

Public Laws Electronic Notification Service (PENS)

PENS is a free electronic mail notification service of newly enacted public laws. To subscribe, go to *http://hydra.gsa.gov/archives/publaws-l.html* or send E-mail to **listserv@listserv.gsa.gov** with the following text message:

SUBSCRIBE PUBLAWS-L Your Name.

Note: This service is strictly for E-mail notification of new laws. The text of laws is not available through this service. **PENS** cannot respond to specific inquiries sent to this address.