AUTHENTICATED U.S. GOVERNMENT INFORMATION GPO

Federal Register

8–2–02 Friday
Vol. 67 No. 149 August 2, 2002
Pages 50343–50580

The **FEDERAL REGISTER** is published daily, Monday through Friday, except official holidays, by the Office of the Federal Register, National Archives and Records Administration, Washington, DC 20408, under the Federal Register Act (44 U.S.C. Ch. 15) and the regulations of the Administrative Committee of the Federal Register (1 CFR Ch. I). The Superintendent of Documents, U.S. Government Printing Office, Washington, DC 20402 is the exclusive distributor of the official edition.

The **Federal Register** provides a uniform system for making available to the public regulations and legal notices issued by Federal agencies. These include Presidential proclamations and Executive Orders, Federal agency documents having general applicability and legal effect, documents required to be published by act of Congress, and other Federal agency documents of public interest.

Documents are on file for public inspection in the Office of the Federal Register the day before they are published, unless the issuing agency requests earlier filing. For a list of documents currently on file for public inspection, see http://www.nara.gov/fedreg.

The seal of the National Archives and Records Administration authenticates the Federal Register as the official serial publication established under the Federal Register Act. Under 44 U.S.C. 1507, the contents of the **Federal Register** shall be judicially noticed.

The **Federal Register** is published in paper and on 24x microfiche. It is also available online at no charge as one of the databases on GPO Access, a service of the U.S. Government Printing Office.

The online edition of the **Federal Register** is issued under the authority of the Administrative Committee of the Federal Register as the official legal equivalent of the paper and microfiche editions (44 U.S.C. 4101 and 1 CFR 5.10). It is updated by 6 a.m. each day the **Federal Register** is published and it includes both text and graphics from Volume 59, Number 1 (January 2, 1994) forward.

GPO Access users can choose to retrieve online **Federal Register** documents as TEXT (ASCII text, graphics omitted), PDF (Adobe Portable Document Format, including full text and all graphics), or SUMMARY (abbreviated text) files. Users should carefully check retrieved material to ensure that documents were properly downloaded.

On the World Wide Web, connect to the **Federal Register** at http://www.access.gpo.gov/nara. Those without World Wide Web access can also connect with a local WAIS client, by Telnet to swais.access.gpo.gov, or by dialing (202) 512–1661 with a computer and modem. When using Telnet or modem, type swais, then log in as guest with no password.

For more information about GPO Access, contact the GPO Access User Support Team by E-mail at gpoaccess@gpo.gov; by fax at (202) 512–1262; or call (202) 512–1530 or 1–888–293–6498 (toll free) between 7 a.m. and 5 p.m. Eastern time, Monday–Friday, except Federal holidays.

The annual subscription price for the **Federal Register** paper edition is $699, or $764 for a combined **Federal Register, Federal Register** Index and List of CFR Sections Affected (LSA) subscription; the microfiche edition of the **Federal Register** including the **Federal Register** Index and LSA is $264. Six month subscriptions are available for one-half the annual rate. The charge for individual copies in paper form is $10.00 for each issue, or $10.00 for each group of pages as actually bound; or $2.00 for each issue in microfiche form. All prices include regular domestic postage and handling. International customers please add 25% for foreign handling. Remit check or money order, made payable to the Superintendent of Documents, or charge to your GPO Deposit Account, VISA, MasterCard or Discover. Mail to: New Orders, Superintendent of Documents, P.O. Box 371954, Pittsburgh, PA 15250–7954.

There are no restrictions on the republication of material appearing in the **Federal Register.**

How To Cite This Publication: Use the volume number and the page number. Example: 67 FR 12345.

SUBSCRIPTIONS AND COPIES

PUBLIC

Subscriptions:

Paper or fiche	**202–512–1800**
Assistance with public subscriptions	**202–512–1806**

General online information **202–512–1530; 1–888–293–6498**

Single copies/back copies:

Paper or fiche	**202–512–1800**
Assistance with public single copies	**1–866–512–1800 (Toll-Free)**

FEDERAL AGENCIES

Subscriptions:

Paper or fiche	**202–523–5243**
Assistance with Federal agency subscriptions	**202–523–5243**

What's NEW!

Federal Register Table of Contents via e-mail

Subscribe to FEDREGTOC, to receive the **Federal Register** Table of Contents in your e-mail every day.

If you get the HTML version, you can click directly to any document in the issue.

To subscribe, go to **http://listserv.access.gpo.gov** and select:

Online mailing list archives
FEDREGTOC-L
Join or leave the list

Then follow the instructions.

FEDERAL REGISTER WORKSHOP

THE FEDERAL REGISTER: WHAT IT IS AND HOW TO USE IT

FOR: Any person who uses the **Federal Register** and Code of Federal Regulations.

WHO: Sponsored by the Office of the Federal Register.

WHAT: Free public briefings (approximately 3 hours) to present:

1. The regulatory process, with a focus on the Federal Register system and the public's role in the development of regulations.
2. The relationship between the **Federal Register** and Code of Federal Regulations.
3. The important elements of typical **Federal Register** documents.
4. An introduction to the finding aids of the FR/CFR system.

WHY: To provide the public with access to information necessary to research Federal agency regulations which directly affect them. There will be no discussion of specific agency regulations.

WASHINGTON, DC

WHEN: September 24, 2002—9:00 a.m. to noon

WHERE: Office of the Federal Register
Conference Room
800 North Capitol Street, NW.
Washington, DC
(3 blocks north of Union Station Metro)

RESERVATIONS: 202–523–4538; or
info@fedreg.nara.gov

Printed on recycled paper.

Contents

Federal Register

Vol. 67, No. 149

Friday, August 2, 2002

Administration on Aging
See Aging Administration

Aging Administration
NOTICES
Grants and cooperative agreements; availability, etc.:
Osteoporosis awareness in post-menopausal women, 50441

Agricultural Marketing Service
NOTICES
Committees; establishment, renewal, termination, etc.:
Peanut Standards Board, 50409

Agriculture Department
See Agricultural Marketing Service
See Food Safety and Inspection Service
See Forest Service

Army Department
See Engineers Corps

Arts and Humanities, National Foundation
See National Foundation on the Arts and the Humanities

Blind or Severely Disabled, Committee for Purchase From People Who Are
See Committee for Purchase From People Who Are Blind or Severely Disabled

Census Bureau
NOTICES
Agency information collection activities:
Proposed collection; comment request, 50416–50417

Centers for Disease Control and Prevention
NOTICES
Agency information collection activities:
Submission for OMB review; comment request, 50441–50442
Meetings:
Disease, Disability, and Injury Prevention and Control Special Emphasis Panels, 50442
Injury Prevention and Control Advisory Committee, 50442–50443

Centers for Medicare & Medicaid Services
NOTICES
Agency information collection activities:
Proposed collection; comment request, 50443
Submission for OMB review; comment request, 50443–50445

Coast Guard
RULES
Drawbridge operations:
Florida, 50349–50351
Ports and waterways safety:
Chesapeake Bay entrance and Hampton Roads, VA; regulated navigation area, 50351
Salem Harbor, MA; safety zone, 50351–50353
NOTICES
Committees; establishment, renewal, termination, etc.:
National Offshore Safety Advisory Committee, 50500–50501
Meetings:
Merchant Marine Personnel Advisory Committee, 50501

Commerce Department
See Census Bureau
See Economic Development Administration
See Industry and Security Bureau
See International Trade Administration
See National Oceanic and Atmospheric Administration
See Technology Administration

Committee for Purchase From People Who Are Blind or Severely Disabled
NOTICES
Procurement list; additions and deletions, 50415–50416

Committee for the Implementation of Textile Agreements
NOTICES
Textile and apparel categories:
Caribbean Basin Trade Partnership Act; short supply requests—
100 percent stock-dyed worsted wool woven fabric, 50422–50423

Defense Department
See Engineers Corps
See Navy Department
NOTICES
United Kingdom defense items; waiver of DOD procurement limitations, 50423–50424

Drug Enforcement Administration
NOTICES
Applications, hearings, determinations, etc.:
Owens, Gregory D., D.D.S., 50461–50465

Economic Development Administration
NOTICES
Agency information collection activities:
Proposed collection; comment request, 50417–50419
Trade adjustment assistance eligibility determination petitions:
Mellano Enterprises, Inc., et al., 50419

Employment Standards Administration
NOTICES
Minimum wages for Federal and federally-assisted construction; general wage determination decisions, 50470–50471

Energy Department
See Federal Energy Regulatory Commission
NOTICES
Floodplain and wetlands protection; environmental review determinations; availability, etc.:
Pantex Plant, TX; Zone 13 sewage treatment plant deactivation and demolition, 50424–50425

Engineers Corps
PROPOSED RULES
Danger zones and restricted areas:
Bangor, WA; Naval Submarine Base Bangor, 50389–50390
Narragansett Bay East Passage, Coddington Cove, RI; Newport Naval Station, 50390–50391
Everglades Comprehensive Restoration Plan; programmatic regulations, 50539–50575

Environmental Protection Agency
RULES
Pesticides; tolerances in food, animal feeds, and raw agricultural commodities:
Fludioxonil, 50354–50362
PROPOSED RULES
Air quality implementation plans; approval and promulgation; various States:
Louisiana, 50391–50406
NOTICES
Agency information collection activities:
Submission for OMB review; comment request, 50427–50428
Environmental statements; availability, etc.:
Agency statements—
Comment availability, 50428–50429
Weekly receipts, 50428
Organization, functions, and authority delegations:
EPA Headquarter Dockets; temporary closure and relocation, 50429–50430
Pesticide, food, and feed additive petitions:
FMC Corp., 50430–50434

Executive Office of the President
See Presidential Documents
See Science and Technology Policy Office

Export-Import Bank
NOTICES
Reports and guidance documents; availability, etc.:
Information disseminated by Federal agencies; quality, objectivity, utility, and integrity guidelines, 50435–50437

Federal Aviation Administration
RULES
Airworthiness directives:
Bell, 50347–50348
Eurocopter France, 50345–50346
PROPOSED RULES
Airworthiness directives:
Stemme GmbH & Co. KG, 50383–50386
NOTICES
Airport noise compatibility program:
Four Corners Regional Airport, NM, 50501–50502
Noise exposure maps—
Port Columbus International Airport, OH, 50502–50503
Exemption petitions; summary and disposition, 50503
Meetings:
RTCA, Inc., 50504

Federal Communications Commission
NOTICES
Meetings:
2003 World Radiocommunication Conference Advisory Committee, 50437–50438
Rulemaking proceedings; petitions filed, granted, denied, etc., 50438

Federal Deposit Insurance Corporation
NOTICES
Meetings; Sunshine Act, 50438

Federal Emergency Management Agency
RULES
Flood elevation determinations:
Various States, 50362–50367
NOTICES
Disaster and emergency areas:
Texas, 50438
Wisconsin, 50438–50439
Meetings:
Emergency Medical Services Federal Interagency Committee, 50439–50440

Federal Energy Regulatory Commission
NOTICES
Applications, hearings, determinations, etc.:
ANR Storage Co., 50425–50426
San Diego Gas & Electric Co., 50426
Southern Co. Services, Inc., 50426–50427

Federal Highway Administration
NOTICES
Environmental statements; notice of intent:
Dallas and Ellis Counties, TX, 50504

Federal Reserve System
NOTICES
Banks and bank holding companies:
Change in bank control, 50440
Formations, acquisitions, and mergers, 50440

Fish and Wildlife Service
NOTICES
Environmental statements; availability, etc.:
Kenai National Wildlife Refuge, AK; Swanson River Satellites Natural Gas Exploration and Development Project, 50453–50454
T/V Command Oil Spill, San Francisco, CA; restoration planning for injured natural resources, 50454–50455

Food and Drug Administration
NOTICES
Agency information collection activities:
Proposed collection; comment request, 50445–50447
Committees; establishment, renewal, termination, etc.:
Food Advisory Committee, 50447–50448
Meetings:
FDA Food Labeling and Allergen Declaration; public workshop; correction, 50448
Prescription drug user fee rates FY 2003, 50448–50451

Food Safety and Inspection Service
NOTICES
Meetings:
Microbiological Criteria for Foods National Advisory Committee, 50409–50411

Forest Service
NOTICES
Environmental statements; notice of intent:
Allegheny National Forest, PA, 50411–50412
Malheur, Umatilla, and Wallowa-Whitman National Forests, OR, 50412–50414
Meetings:
Olympic Provincial Advisory Committee, 50414–50415

Resource Advisory Committees—
Siskiyou County, 50415

General Services Administration
NOTICES
Meetings:
Governmentwide Per Diem Advisory Board, 50440–50441

Health and Human Services Department
See Aging Administration
See Centers for Disease Control and Prevention
See Centers for Medicare & Medicaid Services
See Food and Drug Administration
See Health Resources and Services Administration

Health Resources and Services Administration
NOTICES
Agency information collection activities:
Proposed collection; comment request, 50451
Submission for OMB review; comment request, 50451–50452
Meetings:
Health Professions and Nurse Education Special Emphasis Panels; correction, 50452

Housing and Urban Development Department
NOTICES
Grants and cooperative agreements; availability, etc.:
Facilities to assist homeless—
Excess and surplus Federal property, 50452–50453

Immigration and Naturalization Service
NOTICES
Agency information collection activities:
Submission for OMB review; comment request, 50465–50468

Indian Affairs Bureau
NOTICES
Agency information collection activities:
Submission for OMB review; comment request, 50455–50456

Industry and Security Bureau
RULES
Export administration regulations:
Chemical and biological weapons controls; Australia Group; Chemical Weapons Convention
Correction, 50348–50349

Interior Department
See Fish and Wildlife Service
See Indian Affairs Bureau
See Land Management Bureau

Internal Revenue Service
PROPOSED RULES
Income taxes:
Deposit interest paid to nonresident aliens; reporting guidance, 50386–50389
Foreign corporations; gross income; exclusions, 50509–50537

International Trade Administration
NOTICES
Agency information collection activities:
Proposed collection; comment request, 50420
Antidumping:
Stainless steel sheet and strip in coils from—
Italy, 50421–50422
Antidumping and countervailing duties:
Five year (sunset) reviews—
Initiation of reviews, 50420–50421

International Trade Commission
NOTICES
Import investigations:
Brake rotors from—
China, 50459
Crawfish tail meat from—
China, 50459–50461

Justice Department
See Drug Enforcement Administration
See Immigration and Naturalization Service

Labor Department
See Employment Standards Administration
NOTICES
Agency information collection activities:
Submission for OMB review; comment request, 50468–50470

Land Management Bureau
NOTICES
Alaska Native claims selection:
Kikiktagruk Inupiat Corp., 50456
Sealaska Corp., 50456
Environmental statements; availability, etc.:
Northern and Eastern Colorado Desert Plan, California Desert Conservation Area, CA, 50457
Public land orders:
Colorado, 50457–50458
Realty actions; sales, leases, etc.:
Colorado, 50458
Survey plat filings:
Alaska, 50458–50459

Maritime Administration
PROPOSED RULES
Marine carriers and related activities:
Time charters; general approval, 50406–50408
NOTICES
Coastwise trade laws; administrative waivers:
FANTASIA, 50505
STEPHANIE ANN, 50505–50506
THORR, 50506–50507

National Foundation on the Arts and the Humanities
NOTICES
Meetings:
Humanities Panel, 50471–50472

National Highway Traffic Safety Administration
NOTICES
Motor vehicle safety standards; exemption petitions, etc.:
Michelin North America, Inc., 50507

National Oceanic and Atmospheric Administration
RULES
Fishery conservation and management:
Caribbean, Gulf of Mexico, and South Atlantic fisheries—
Red snapper, 50367–50368
Northeastern United States fisheries—
Summer flounder, scup, and black sea bass, 50368–50373

Navy Department
NOTICES
Meetings:
Naval Research Advisory Committee, 50424

Nuclear Regulatory Commission
PROPOSED RULES
Production and utilization facilities; domestic licensing:
Combustible gas control in containment, 50374–50383
NOTICES
Agency information collection activities:
Submission for OMB review; comment request, 50472–50473
Reports and guidance documents; availability, etc.:
Consolidated line item improvement process; mode change limitations; requirements modification; technical specification improvement; model safety evaluation, 50475–50485
Applications, hearings, determinations, etc.:
Florida Power & Light Co., 50473–50475

Postal Service
RULES
Procedures:
Fines, deductions, and damages, 50353–50354

Presidential Documents
ADMINISTRATIVE ORDERS
Foreign Assistance Act of 1961; availability of funds (Presidential Determination No. 2002-26), 50343

Public Health Service
See Centers for Disease Control and Prevention
See Food and Drug Administration
See Health Resources and Services Administration

Railroad Retirement Board
NOTICES
Agency information collection activities:
Proposed collection; comment request, 50485–50486

Science and Technology Policy Office
NOTICES
Biotechnology-derived plants; field test requirements and early food safety assessments for new proteins produced by such plants, 50577–50580

Securities and Exchange Commission
NOTICES
Agency information collection activities:
Proposed collection; comment request, 50486–50487
Investment Company Act of 1940:
Exemption applications—
Fremont Mutual Funds, Inc., et al., 50487–50489
Phoenix Edge Series Fund et al., 50489–50497
Self-regulatory organizations; proposed rule changes:
International Securities Exchange LLC, 50497–50499
National Association of Securities Dealers, Inc., 50499

Small Business Administration
PROPOSED RULES
Small business size standards:
Nonmanufacturer rule; waivers—
Small arms ammunition manufacturing, 50383
NOTICES
Agency information collection activities:
Proposed collection; comment request, 50499–50500
Disaster loan areas:
California, 50500
New York, 50500

State Department
RULES
Visas; nonimmigrant documentation:
Visa Waiver Program
Correction, 50349

Surface Transportation Board
NOTICES
Railroad services abandonment:
CSX Transportation, Inc., 50507–50508

Technology Administration
NOTICES
Senior Executive Service:
Performance Review Board; membership, 50422

Textile Agreements Implementation Committee
See Committee for the Implementation of Textile Agreements

Transportation Department
See Coast Guard
See Federal Aviation Administration
See Federal Highway Administration
See Maritime Administration
See National Highway Traffic Safety Administration
See Surface Transportation Board

Treasury Department
See Internal Revenue Service

Separate Parts In This Issue

Part II
Treasury Department, Internal Revenue Service, 50509–50537

Part III
Army Department, Engineers Corps, 50539–50575

Part IV
Executive Office of the President, Science and Technology Policy Office, 50577–50580

Reader Aids
Consult the Reader Aids section at the end of this issue for phone numbers, online resources, finding aids, reminders, and notice of recently enacted public laws.
To subscribe to the Federal Register Table of Contents LISTSERV electronic mailing list, go to http://listserv.access.gpo.gov and select Online mailing list archives, FEDREGTOC-L, Join or leave the list (or change settings); then follow the instructions.

CFR PARTS AFFECTED IN THIS ISSUE

A cumulative list of the parts affected this month can be found in the Reader Aids section at the end of this issue.

3 CFR

Administrative Orders:

Presidential Determinations:

No. 2002-26 of July 17, 2002 50343

10 CFR

Proposed Rules:

50 50374

52 50374

13 CFR

Proposed Rules:

121 50383

14 CFR

39 (2 documents) 50345, 50347

Proposed Rules:

39 50383

15 CFR

774 50348

22 CFR

41 50349

26 CFR

Proposed Rules:

1 (2 documents) 50386, 50510

31 50386

33 CFR

117 50349

165 (2 documents) 50351

Proposed Rules:

334 (2 documents) 50389, 50390

385 50540

39 CFR

927 50353

40 CFR

180 50354

Proposed Rules:

52 50391

44 CFR

65 50362

46 CFR

Proposed Rules:

221 50406

50 CFR

622 50367

648 50368

Federal Register
Vol. 67, No. 149
Friday, August 2, 2002

Presidential Documents

Title 3—

The President

Presidential Determination No. 02–26 of July 17, 2002

Determination Under Section 610(a) of the Foreign Assistance Act of 1961, as amended, to Transfer $10.3 million to the Operating Expense Appropriation

Memorandum for the Administrator of the United States Agency for International Development

Pursuant to the authorities vested in me by section 610(a) of the Foreign Assistance Act of 1961, as amended (the ''Act''), I hereby determine that it is necessary for the purposes of the Act that $10.3 million appropriated to carry out chapter 1 of part I of the Act be transferred to, and consolidated with, appropriations made to carry out section 667(a) of the Act. I hereby authorize such transfer and consolidation.

This determination shall be effective immediately and shall be published in the **Federal Register**.

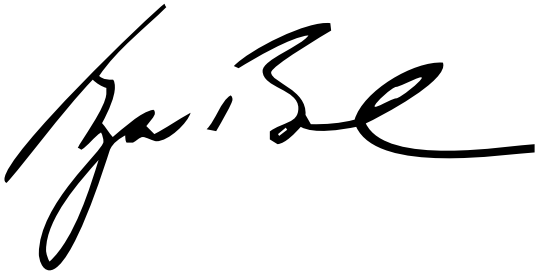

THE WHITE HOUSE,
Washington, July 17, 2002

[FR Doc. 02–19698
Filed 8–1–02; 8:45 am]
Billing code 6116–01–M

Rules and Regulations

Federal Register
Vol. 67, No. 149
Friday, August 2, 2002

This section of the FEDERAL REGISTER contains regulatory documents having general applicability and legal effect, most of which are keyed to and codified in the Code of Federal Regulations, which is published under 50 titles pursuant to 44 U.S.C. 1510.

The Code of Federal Regulations is sold by the Superintendent of Documents. Prices of new books are listed in the first FEDERAL REGISTER issue of each week.

DEPARTMENT OF TRANSPORTATION

Federal Aviation Administration

14 CFR Part 39

[Docket No. 2001–SW–50–AD; Amendment 39–12838; AD 2002–15–08]

RIN 2120–AA64

Airworthiness Directives; Eurocopter France Model EC120B, EC 155B, SA330F, SA330G, SA330J, AS332C, AS332L, AS332L1, AS332L2, AS350B, AS350BA, AS350B1, AS350B2, AS350B3, AS350D, AS355E, AS355F, AS355F1, AS355F2, AS355N, AS365N2, AS 365 N3, SA–365N, and SA–365N1 Helicopters

AGENCY: Federal Aviation Administration, DOT.

ACTION: Final rule.

SUMMARY: This amendment adopts a new airworthiness directive (AD) for specified Eurocopter France (ECF) model helicopters. This AD requires determining the load release unit (cargo hook) serial number, measuring the clearance between the locking catch and the cargo hook, and removing unairworthy cargo hooks from service. This amendment is prompted by the discovery of a defect on certain cargo hooks that may prevent load release. The actions specified by this AD are intended to prevent failure of a cargo hook to release a load creating an additional hazard in an emergency situation and subsequent loss of control of a helicopter.

DATES: Effective September 6, 2002.

FOR FURTHER INFORMATION CONTACT: Jim Grigg, Aviation Safety Engineer, FAA, Rotorcraft Directorate, Rotorcraft Standards Staff, Fort Worth, Texas 76193–0110, telephone (817) 222–5490, fax (817) 222–5961.

SUPPLEMENTARY INFORMATION: A proposal to amend 14 CFR part 39 to include an AD for specified ECF model helicopters was published in the **Federal Register** on April 10, 2002 (67 FR 17306). That action proposed to require, before the next flight utilizing the cargo hook, measuring the clearance between the locking catch and the cargo hook, and removing any cargo hook from service if that clearance is equal to or greater than 14mm (0.55 inches).

Discussion

The Direction Generale De L'Aviation Civile (DGAC), the airworthiness authority for France, notified the FAA that an unsafe condition may exist on various ECF model helicopters. The DGAC advises of the discovery of an anomaly on the locking catch of certain cargo hooks that could jam the ring on the cargo hook and jeopardize the release of an underslung load.

ECF has issued Alert Telexes 01.00.47, 01.00.49, 01.00.53, 01.00.60, 01.00.66 04A001, and 04A004, dated July 10, 2001, which specify measuring the clearance between the locking catch and the cargo hook and the acceptable dimension of the ring. The telexes state that the clearance, as illustrated in their Figure 1, must be less than 14 millimeters (mm) (0.55 inches). The DGAC classified these telexes as mandatory and issued AD 2001–318(A), dated July 25, 2001, to ensure the continued airworthiness of these helicopters in France.

Interested persons have been afforded an opportunity to participate in the making of this amendment. No comments were received on the proposal or the FAA's determination of the cost to the public. The FAA has determined that air safety and the public interest require the adoption of the rule as proposed except for a minor change. In paragraph (a) of the AD, we moved the parenthetical phrase ''(see Figure 1)'' to the end of the paragraph, removed the parenthesis, and added a colon. These changes will neither increase the economic burden on any operator nor increase the scope of the AD .

The FAA estimates that this AD will affect 725 helicopters of U.S. registry and will take approximately ¼ work hour to determine the serial number of the part, 1 work hour to measure the gap between the locking catch and the cargo hook for an estimated 50 helicopters, and 1 work hour to remove and replace each of an estimated 10 cargo hooks. The average labor rate is estimated to be $60 per work hour. Required parts would cost approximately $5,000. Based on these figures, the total cost impact of the AD on U.S. operators is estimated to be $64,475 assuming 10 cargo hooks require replacement.

The regulations adopted herein will not have a substantial direct effect on the States, on the relationship between the national Government and the States, or on the distribution of power and responsibilities among the various levels of government. Therefore, it is determined that this final rule does not have federalism implications under Executive Order 13132.

For the reasons discussed above, I certify that this action (1) is not a ''significant regulatory action'' under Executive Order 12866; (2) is not a ''significant rule'' under DOT Regulatory Policies and Procedures (44 FR 11034, February 26, 1979); and (3) will not have a significant economic impact, positive or negative, on a substantial number of small entities under the criteria of the Regulatory Flexibility Act. A final evaluation has been prepared for this action and it is contained in the Rules Docket. A copy of it may be obtained from the Rules Docket at the FAA, Office of the Regional Counsel, Southwest Region, 2601 Meacham Blvd., Room 663, Fort Worth, Texas.

List of Subjects in 14 CFR Part 39

Air transportation, Aircraft, Aviation safety, Safety.

Adoption of the Amendment

Accordingly, pursuant to the authority delegated to me by the Administrator, the Federal Aviation Administration amends part 39 of the Federal Aviation Regulations (14 CFR part 39) as follows:

PART 39—AIRWORTHINESS DIRECTIVES

1. The authority citation for part 39 continues to read as follows:

Authority: 49 U.S.C. 106(g), 40113, 44701.

§ 39.13 [Amended]

2. Section 39.13 is amended by adding a new airworthiness directive to read as follows:

2002–15–08 Eurocopter France: Amendment 39–12838. Docket No. 2001–SW–50–AD.

Applicability: Model EC120B, EC155B, SA330F, SA330G, SA330J, AS332C, AS332L, AS332L1, AS332L2, AS350B, AS350BA, AS350B1, AS350B2, AS350B3, AS350D, AS355E, AS355F, AS355F1, AS355F2, AS355N, AS–365N2, AS 365 N3, SA–365N, and SA–365N1 helicopters, with a SIREN load release unit (cargo hook), part number (P/N) AS21–5–1 through –7, and a cargo hook serial number less than 415, installed, certificated in any category.

Note 1: This AD applies to each helicopter identified in the preceding applicability provision, regardless of whether it has been otherwise modified, altered, or repaired in the area subject to the requirements of this AD. For helicopters that have been modified, altered, or repaired so that the performance of the requirements of this AD is affected, the owner/operator must request approval for an alternative method of compliance in accordance with paragraph (b) of this AD. The request should include an assessment of the effect of the modification, alteration, or repair on the unsafe condition addressed by this AD; and if the unsafe condition has not been eliminated, the request should include specific proposed actions to address it.

Compliance: Required before the next flight utilizing the cargo hook, unless accomplished previously.

To prevent failure of a cargo hook, inability to release a load creating an additional hazard in an emergency situation, and subsequent loss of control of a helicopter, accomplish the following:

(a) With the cargo hook in the no-load position, measure the clearance ''J'' in accordance with Figure 1 of this AD. Remove any cargo hook if clearance ''J'' is equal to or greater than 14 millimeters (0.55 inches). See Figure 1:

BILLING CODE 4910–13–P

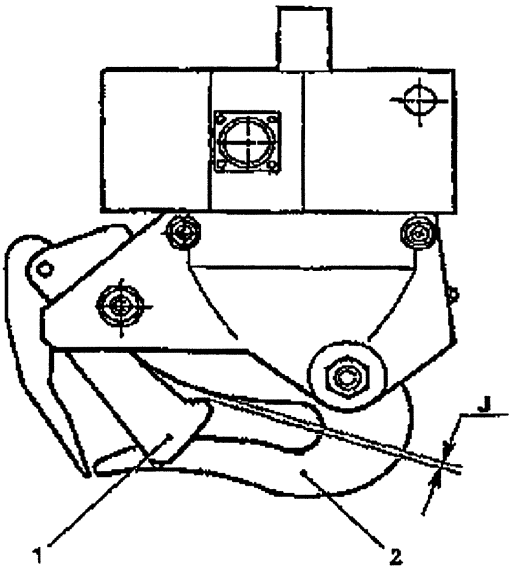

Figure 1

Siren Load Release Unit
P/N AS21-5-(1 through 7)

1. Locking Catch
2. Cargo Hook

Clearance "J" must be less than 14 mm (0.55 inches)

BILLING CODE 4910–13–C

(b) An alternative method of compliance or adjustment of the compliance time that provides an acceptable level of safety may be used if approved by the Manager, Regulations Group, Rotorcraft Directorate, FAA. Operators shall submit their requests through an FAA Principal Maintenance Inspector, who may concur or comment and then send it to the Manager, Regulations Group.

Note 2: Information concerning the existence of approved alternative methods of compliance with this AD, if any, may be obtained from the Regulations Group.

(c) Special flight permits will not be issued allowing use of the affected cargo hook.

(d) This amendment becomes effective on September 6, 2002.

Note 3: The subject of this AD is addressed in Direction Generale De L'Aviation Civile, (France) AD 2001–318(A), dated July 25, 2001.

Issued in Fort Worth, Texas, on July 24, 2002.

Eric Bries,

Acting Manager, Rotorcraft Directorate, , Aircraft Certification Service.

[FR Doc. 02–19488 Filed 8–1–02; 8:45 am]

BILLING CODE 4910–13–P

DEPARTMENT OF TRANSPORTATION

Federal Aviation Administration

14 CFR Part 39

[Docket No. 2002–SW–21–AD; Amendment 39–12836; AD 2002–13–51]

RIN 2120–AA64

Airworthiness Directives; Model HH–1K, TH–1F, TH–1L, UH–1A, UH–1B, UH–1E, UH–1F, UH–1H, UH–1L, and UH–1P; and Southwest Florida Aviation SW204, SW204HP, SW205, and SW205A–1 Helicopters Manufactured by Bell Helicopter Textron, Inc. for the Armed Forces of the United States

AGENCY: Federal Aviation Administration, DOT.

ACTION: Final rule; request for comments.

SUMMARY: This document publishes in the **Federal Register** an amendment adopting Airworthiness Directive (AD) 2002–13–51, sent previously to all known U.S. owners and operators of the specified helicopters by individual letters. This AD requires cleaning and inspecting a certain tail rotor (T/R) grip with a magnet to determine if it is made of steel. If it is not made of steel, this AD requires replacing each affected T/R grip with an airworthy, steel T/R grip. This AD is prompted by reports of timed-out T/R grips being improperly remarked and reinstalled on certain helicopters. This unsafe condition, if not detected, could result in failure of the T/R grip and subsequent loss of control of the helicopter.

DATES: Effective August 19, 2002, to all persons except those persons to whom it was made immediately effective by Emergency AD 2002–13–51, issued on June 27, 2002, which contained the requirements of this amendment.

Comments for inclusion in the Rules Docket must be received on or before October 1, 2002.

ADDRESSES: Submit comments in triplicate to the Federal Aviation Administration (FAA), Office of the Regional Counsel, Southwest Region, Attention: Rules Docket No. 2002–SW–21–AD, 2601 Meacham Blvd., Room 663, Fort Worth, Texas 76137. You may also send comments electronically to the Rules Docket at the following address: *9-asw-adcomments@faa.gov.*

FOR FURTHER INFORMATION CONTACT: Kennedy Jones, Aviation Safety Engineer, FAA, Rotorcraft Directorate, Rotorcraft Certification Office, Fort Worth, Texas 76193–0170, telephone (817) 222–5148, fax (817) 222–5783.

SUPPLEMENTARY INFORMATION: The FAA issued Emergency AD (EAD) 2002–08–53, Docket No. 2002–SW–23–AD, on April 22, 2002, and superseding EAD 2002–09–51, Docket No. 2002–SW–24–AD, on May 9, 2002, for Bell Helicopter Textron, Inc. (Bell) Model 204B, 205A, A–1, and B helicopters. That EAD requires cleaning and inspecting T/R grip, part number (P/N) 204–011–728–019, with a magnet to determine if it is made of steel. If it is not made of steel, the current EAD requires replacing the T/R grip with an airworthy steel T/R grip. According to reports, T/R grips, P/N 204–011–728–019, removed from service on the Bell Model 204B and 205A–1 helicopters as required by AD 73–17–04 (38 FR 22223, August 17, 1973), were re-marked as P/N 205–011–711–101 and may have been installed on Bell Model 204 and 205 helicopters. These T/R grips may also be installed on similar restricted category military surplus helicopters.

On June 27, 2002, the FAA issued EAD 2002–13–51 for the specified model helicopters, which requires cleaning the T/R grip, determining if it is made of steel, and replacing the T/R grip with an airworthy T/R grip if the main body is not made of steel. That action was prompted by reports of timed-out T/R grips being improperly remarked and reinstalled on certain helicopters. This unsafe condition, if not detected, could result in failure of the T/R grip and subsequent loss of control of the helicopter.

This unsafe condition is likely to exist or develop on certain restricted category helicopters of these same type designs. Therefore, the FAA issued EAD 2002–13–51 to prevent failure of the T/R grip and subsequent loss of control of the helicopter. The AD requires cleaning the affected T/R grip, inspecting the T/R grip by placing a magnet on the exterior of the main body of the T/R grip to determine if the T/R grip is made of steel, and replacing any T/R grip not made of steel. The short compliance time involved is required because the previously described critical unsafe condition can adversely affect the structural integrity and controllability of the helicopter. Therefore, cleaning, inspecting, and determining if the T/R grip is made of steel and replacing any T/R grip not made of steel are required before further flight, and this AD must be issued immediately.

Since it was found that immediate corrective action was required, notice and opportunity for prior public comment thereon were impracticable and contrary to the public interest; and good cause existed to make the AD effective immediately by individual letters issued on June 27, 2002, to all known U.S. owners and operators of Model HH–1K, TH–1F, TH–1L, UH–1A, UH–1B, UH–1E, UH–1F, UH–1H, UH–1L, and UH–1P; and Southwest Florida Aviation SW204, SW204HP, SW205, and SW205A–1 helicopters manufactured by Bell for the Armed Forces of the United States. These conditions still exist, and the AD is hereby published in the **Federal Register** as an amendment to 14 CFR 39.13 to make it effective to all persons.

The FAA estimates that this AD will affect 75 helicopters of U.S. registry and will take approximately 2 work hours per helicopter to accomplish the required actions at an average labor rate of $60 per work hour. Required parts will cost approximately $4,864 per helicopter if the T/R is replaced. Based on these figures, the total cost impact of the AD on U.S. operators is estimated to be $373,800 assuming the T/R is replaced on the entire fleet.

Comments Invited

Although this action is in the form of a final rule that involves requirements affecting flight safety and, thus, was not preceded by notice and an opportunity for public comment, comments are invited on this rule. Interested persons are invited to comment on this rule by submitting such written data, views, or arguments as they may desire. Communications should identify the Rules Docket number and be submitted in triplicate to the address specified under the caption **ADDRESSES.** All communications received on or before the closing date for comments will be considered, and this rule may be amended in light of the comments received. Factual information that supports the commenter's ideas and suggestions is extremely helpful in evaluating the effectiveness of the AD action and determining whether additional rulemaking action would be needed.

Comments are specifically invited on the overall regulatory, economic, environmental, and energy aspects of the rule that might suggest a need to modify the rule. All comments submitted will be available in the Rules Docket for examination by interested persons. A report that summarizes each FAA-public contact concerned with the substance of this AD will be filed in the Rules Docket.

Commenters wishing the FAA to acknowledge receipt of their mailed comments submitted in response to this rule must submit a self-addressed, stamped postcard on which the following statement is made: ''Comments to Docket No. 2002–SW–

21–AD.'' The postcard will be date stamped and returned to the commenter.

The regulations adopted herein will not have a substantial direct effect on the States, on the relationship between the national Government and the States, or on the distribution of power and responsibilities among the various levels of government. Therefore, it is determined that this final rule does not have federalism implications under Executive Order 13132.

The FAA has determined that this regulation is an emergency regulation that must be issued immediately to correct an unsafe condition in aircraft, and that it is not a ''significant regulatory action'' under Executive Order 12866. It has been determined further that this action involves an emergency regulation under DOT Regulatory Policies and Procedures (44 FR 11034, February 26, 1979). If it is determined that this emergency regulation otherwise would be significant under DOT Regulatory Policies and Procedures, a final regulatory evaluation will be prepared and placed in the Rules Docket. A copy of it, if filed, may be obtained from the Rules Docket at the location provided under the caption **ADDRESSES.**

List of Subjects in 14 CFR Part 39

Air transportation, Aircraft, Aviation safety, Safety.

Adoption of the Amendment

Accordingly, pursuant to the authority delegated to me by the Administrator, the Federal Aviation Administration amends part 39 of the Federal Aviation Regulations (14 CFR part 39) as follows:

PART 39—AIRWORTHINESS DIRECTIVES

1. The authority citation for part 39 continues to read as follows:

Authority: 49 U.S.C. 106(g), 40113, 44701.

§ 39.13 [Amended]

2. Section 39.13 is amended by adding a new airworthiness directive to read as follows:

2002–13–51 Arrow Falcon Exporters, Inc. (previously Utah State University); Firefly Aviation Helicopter Services (previously Erickson Air-Crane Co.); Garlick Helicopters, Inc.; Global Helicopter Technology, Inc.; Hagglund Helicopters, LLC (previously Western International Aviation, Inc.); Hawkins and Powers Aviation, Inc.; International Helicopters, Inc.; Robinson Air Crane, Inc.; Smith Helicopters; Southern Helicopter, Inc.; Southwest Florida Aviation; Tamarack Helicopters, Inc. (previously Ranger Helicopters Services, Inc.); U.S. Helicopter, Inc.; and Williams Helicopter Corporation (previously Scott Paper Co.): Amendment 39–12836. Docket No. 2002–SW–21–AD.

Applicability: Model HH–1K, TH–1F, TH–1L, UH–1A, UH–1B, UH–1E, UH–1F, UH–1H, UH–1L, and UH–1P; Southwest Florida Aviation SW204, SW204HP, SW205, and SW205A–1 helicopters manufactured by Bell Helicopter Textron, Inc. for the Armed Forces of the United States, with tail rotor (T/R) grip, part number 205–011–711–101, installed, certificated in any category.

Note 1: This AD applies to each helicopter identified in the preceding applicability provision, regardless of whether it has been otherwise modified, altered, or repaired in the area subject to the requirements of this AD. For helicopters that have been modified, altered, or repaired so that the performance of the requirements of this AD is affected, the owner/operator must request approval for an alternative method of compliance in accordance with paragraph (c) of this AD. The request should include an assessment of the effect of the modification, alteration, or repair on the unsafe condition addressed by this AD; and if the unsafe condition has not been eliminated, the request should include specific proposed actions to address it.

Compliance: Required before further flight, unless accomplished previously.

To prevent failure of the T/R grip and subsequent loss of control of the helicopter, accomplish the following:

(a) Clean the T/R grip.

(b) Determine if the T/R grip is made of steel by placing a magnet on the exterior of the main body of the T/R grip. Do *not* make this determination by placing the magnet on the steel bushing or steel interior liner. If the main body of the T/R grip is not made of steel, replace it with an airworthy steel T/R grip. Only replacement T/R grips made of steel are eligible for installation.

(c) An alternative method of compliance or adjustment of the compliance time that provides an acceptable level of safety may be used if approved by the Manager, Rotorcraft Certification Office, FAA. Operators shall submit their requests through an FAA Principal Maintenance Inspector, who may concur or comment and then send it to the Manager, Rotorcraft Certification Office.

Note 2: Information concerning the existence of approved alternative methods of compliance with this AD, if any, may be obtained from the Rotorcraft Certification Office.

(d) Special flight permits may be issued in accordance with 14 CFR 21.197 and 21.199 to operate the helicopter to a location where the requirements of this AD can be accomplished.

(e) This amendment becomes effective on August 19, 2002, to all persons except those persons to whom it was made immediately effective by Emergency AD 2002–13–51, issued June 27, 2002, which contained the requirements of this amendment.

Issued in Fort Worth, Texas, on July 25, 2002.

Eric Bries,

Acting Manager, Rotorcraft Directorate, Aircraft Certification Service.

[FR Doc. 02–19489 Filed 8–1–02; 8:45 am]

BILLING CODE 4910–13–U

DEPARTMENT OF COMMERCE

Bureau of Industry and Security

15 CFR Part 774

[Docket No. 020509118–2164–02]

RIN 0694–AC62

Revisions and Clarifications to the Export Administration Regulations—Chemical and Biological Weapons Controls: Australia Group; Chemical Weapons Convention; Correction

AGENCY: Bureau of Industry and Security, Commerce.

ACTION: Final rule; correction.

SUMMARY: On Friday, May 31, 2002 (67 FR 37977), the Bureau of Industry and Security (BIS) published a final rule that amended the Export Administration Regulations (EAR) to implement the understandings reached at the October 2001 plenary meeting of the Australia Group (AG). The May 31, 2002, final rule contained two errors in the List of Items Controlled for Export Control Classification Number (ECCN) 2B350 on the Commerce Control List (CCL). This document corrects those errors.

DATES: This correction is effective August 2, 2002.

FOR FURTHER INFORMATION CONTACT: James Seevaratnam, Office of Nonproliferation Controls and Treaty Compliance, Bureau of Industry and Security, Telephone: (202) 501–7900.

SUPPLEMENTARY INFORMATION: This document corrects two errors in the List of Items Controlled for Export Control Classification Number (ECCN) 2B350, which was revised in a final rule that was published by the Bureau of Industry and Security (BIS) on May 31, 2002 (67 FR 37977).

The **SUPPLEMENTARY INFORMATION** section of the May 31, 2002, rule stated that BIS was revising ECCN 2B350 to control exports and reexports of critical components of certain AG-controlled chemical manufacturing equipment listed in that ECCN and also indicated that these critical components included the following: casings (valve bodies) or preformed casing liners designed for valves controlled by 2B350.g. The May 31, 2002, rule inadvertently omitted

these critical valve components from the introductory text of paragraph (g) in the List of Items Controlled for ECCN 2B350. This document corrects that oversight.

The May 31, 2002, rule also contained a minor typographical error in the List of Items Controlled for ECCN 2B350. The introductory text of 2B350.i used the phrase ''casing (pump bodies)'' to describe certain critical pump components controlled under 2B350.i. The phrase should have read: ''casings (pump bodies)''. This document corrects that error.

Rulemaking Requirements

1. This rule has been determined to be not significant for purposes of Executive Order 12866.

2. Notwithstanding any other provision of law, no person is required to respond to, nor shall any person be subject to a penalty for failure to comply with, a collection of information subject to the requirements of the Paperwork Reduction Act, unless that collection of information displays a currently valid OMB Control Number. This rule contains collections of information subject to the requirements of the Paperwork Reduction Act of 1980 (44 U.S.C. 3501 *et seq.*). These collections have been approved by the Office of Management and Budget under Control Numbers 0694–0088 and 0694–0117.

3. This rule does not contain policies with Federalism implications as that term is defined in Executive Order 13132.

4. The provisions of the Administrative Procedure Act (5 U.S.C. 553) requiring notice of proposed rulemaking, the opportunity for public participation, and a delay in effective date, are inapplicable because this regulation involves a military and foreign affairs function of the United States (Sec. 5 U.S.C. 553(a)(1)). Further, no other law requires that a notice of proposed rulemaking and an opportunity for public comment be given for this final rule. Because a notice of proposed rulemaking and an opportunity for public comment are not required to be given for this rule under 5 U.S.C. 553 or by any other law, the analytical requirements of the Regulatory Flexibility Act (5 U.S.C. 601 *et seq.*) are not applicable.

Therefore, this regulation is issued in final form. Although there is no formal comment period, public comments on this regulation are welcome on a continuing basis. Comments should be submitted to Willard Fisher, Regulatory Policy Division, Bureau of Industry and Security, U.S. Department of Commerce, Room 2705, 14th Street and Pennsylvania Avenue, NW., Washington, DC 20230.

According, in the final rule, FR Doc. 02–13581, published at 67 FR 37977, make the following corrections:

PART 774—[CORRECTED]

Supplement No. 1 to Part 774—[Corrected]

1. On page 37988, first column, in ECCN 2B350, in the List of Items Controlled, paragraph g. (which includes g.1 through g.7) is corrected to read as follows:

2B350 Chemical manufacturing facilities and equipment, as follows (see List of Items Controlled).

* * * * *

List of Items Controlled

* * * * *

g. Valves with nominal sizes greater than 1.0 cm (⅜ in.), and casings (valve bodies) or preformed casing liners designed for such valves, in which all surfaces that come in direct contact with the chemical(s) being processed or contained are made from any of the following materials:

g.1. Nickel or alloys with more than 40% nickel by weight;

g.2. Alloys with more than 25% nickel and 20% chromium by weight;

g.3. Fluoropolymers;

g.4. Glass or glass lined (including vitrified or enameled coatings);

g.5. Tantalum or tantalum alloys;

g.6. Titanium or titanium alloys; *or*

g.7. Zirconium or zirconium alloys.

* * * * *

2. On page 37988, first column, in ECCN 2B350, in the List of Items Controlled, in paragraph i. introductory text, line 8, the word ''casing'' is corrected to read ''casings''.

Dated: July 26, 2002.

James J. Jochum,

Assistant Secretary for Export Administration.

[FR Doc. 02–19515 Filed 8–1–02; 8:45 am]

BILLING CODE 3510–33–P

DEPARTMENT OF STATE

22 CFR Part 41

[Public Notice 4078]

Visas: Passports and Visas Not Required for Certain Nonimmigrants—Visa Waiver Program

AGENCY: Department of State, Bureau of Consular Affairs.

ACTION: Final rule; correction.

SUMMARY: On May 7, 2002, the Department of State published in the **Federal Register** [*see* 67 FR 30546], a document which removed the list of countries designated to participate in the Visa Waiver Program. The rule also amended the regulation by replacing ''Visa Waiver Pilot Program'' with ''Visa Waiver Program'' since the program is no longer a pilot program. The Department is publishing this rule to correct an error in this document.

DATES: Effective on August 2, 2002.

FOR FURTHER INFORMATION CONTACT: Pam Chavez, Legislation and Regulations Division, Visa Office, Room L624, SA–1, Department of State 20520–0106, 202–663–1206, or e-mail *chavezpr@state.gov.*

SUPPLEMENTARY INFORMATION: On May 7, 2002, the Department published a final rule document amending the regulations at 22 CFR 41.2(l). The document contained an error in the last line of the regulation making reference to part 40 rather than part 41.

Correction

In the **Federal Register** issue of May 7, 2002, on page 30547, in the last line of § 41.2(l)(2), correct ''part 40'' to read ''part 41.

Dated: July 8, 2002.

Mary A. Ryan,

Assistant Secretary for Consular Affairs, Department of State.

[FR Doc. 02–19540 Filed 8–1–02; 8:45 am]

BILLING CODE 4710–06–P

DEPARTMENT OF TRANSPORTATION

Coast Guard

33 CFR Part 117

[CGD07–02–008]

RIN 2115–AE47

Drawbridge Operation Regulations; Oklawaha River, Marion County, FL

AGENCY: Coast Guard, DOT.

ACTION: Final rule.

SUMMARY: The Coast Guard is changing the regulations governing the operation of the Muclan Farms swingbridge across the Oklawaha River, mile 63.9, Marion County, Florida by allowing the span to remain permanently in the closed position. The bridge has not received a request for an opening since 1998. This action will accommodate the needs of the bridge owner and provide for the reasonable needs of navigation.

DATES: This rule is effective September 3, 2002.

ADDRESSES: Comments and material received from the public, as well as documents indicated in this preamble as being available in the docket, are part of docket [CGD07–02–008] and are available for inspection or copying at Commander (obr) Seventh Coast Guard District, 909 SE 1st Ave., Miami, FL 33131 between 7:30 a.m. and 4 p.m., Monday through Friday, except Federal holidays.

FOR FURTHER INFORMATION CONTACT: Mr. Barry Dragon, Project Manager, Seventh Coast Guard District, Bridge Branch, (305) 415–6743.

SUPPLEMENTARY INFORMATION:

Regulatory Information

On March 26, 2002 we published a notice of proposed rulemaking (NPRM) entitled ''Drawbridge Operation Regulations; Oklawaha River, Marion County, Fla'' in the **Federal Register** (67 FR 13736). We did not receive any comments on the proposed rule. No public hearing was requested, and none was held.

Background and Purpose

The Muclan Farms swingbridge is located in a rural section of Marion County. The current regulations in 33 CFR 117.319 require the swingbridge to open if three hours advance notice is given to the St. Johns River Water Management District. The Water Management District has not received any requests for an opening since 1998. The Water Management District requested the Coast Guard change the current regulation to allow the bridge to remain closed.

Discussion of Comments and Changes

We received no comments on this proposed rule. No changes were made to the proposed rule.

Regulatory Evaluation

This rule is not a ''significant regulatory action'' under section 3(f) of Executive Order 12866, Regulatory Planning and Review, and does not require an assessment of potential costs and benefits under section 6(a)(3) of that Order. The Office of Management and Budget has not reviewed it under that Order. It is not ''significant'' under the regulatory policies and procedures of the Department of Transportation (DOT) (44 FR 11040, February 26, 1979).

The economic impact of this rule will be so minimal that a full Regulatory Evaluation under paragraph 10e of the regulatory policies and procedures of DOT is unnecessary because there have been no requests for a bridge opening since 1998.

Small Entities

Under the Regulatory Flexibility Act (5 U.S.C. 601–612), we have considered whether this rule would have a significant economic impact on a substantial number of small entities. The term ''small entities'' comprises small businesses, not-for-profit organizations that are independently owned and operated and are not dominant in their fields, and governmental jurisdictions with populations of less than 50,000.

This rule may affect the following entities, some of which might be small entities: the owners or operators of vessels on the Oklawaha River intending to transit through the Muclan Farms swingbridge. The Coast Guard certifies under 5 U.S.C. 605(b) that this rule will not have a significant economic impact on a substantial number of small entities because no one has requested a bridge opening since 1998 and no comments were received in response to the NPRM.

Assistance for Small Entities

Under section 213(a) of the Small Business Regulatory Enforcement Fairness Act of 1996 (Public Law 104–121), we offered to assist small entities in understanding the rule so that they could better evaluate its effects on them and participate in the rulemaking process. Small businesses may send comments on the actions of Federal employees who enforce, or otherwise determine compliance with, Federal regulations to the Small Business and Agriculture Regulatory Enforcement Ombudsman and the Regional Small Business Regulatory Fairness Boards. The Ombudsman evaluates these actions annually and rates each agency's responsiveness to small business. If you wish to comment on actions by employees of the Coast Guard, call 1–888–REG–FAIR (1–888–734–3247).

Collection of Information

This rule calls for no new collection of information under the Paperwork Reduction Act of 1995 (44 U.S.C. 3501–3520).

Federalism

A rule has implications for federalism under Executive Order 13132, Federalism, if it has a substantial direct effect on State or local governments and would either preempt State law or impose a substantial direct cost of compliance on them. We have analyzed this rule under that Order and have determined that it does not have implications for federalism.

Unfunded Mandates Reform Act

The Unfunded Mandates Reform Act of 1995 (2 U.S.C. 1531–1538) requires Federal agencies to assess the effects of their discretionary regulatory actions. In particular, the Act addresses actions that may result in the expenditure by a State, local, or tribal government, in the aggregate, or by the private sector of $100,000,000 or more in any one year. Although this rule will not result in such an expenditure, we do discuss the effects of this rule elsewhere in this preamble.

Taking of Private Property

This rule will not effect a taking of private property or otherwise have taking implications under Executive Order 12630, Governmental Actions and Interference with Constitutionally Protected Property Rights.

Civil Justice Reform

This rule meets applicable standards in sections 3(a) and 3(b)(2) of Executive Order 12988, Civil Justice Reform, to minimize litigation, eliminate ambiguity, and reduce burden.

Protection of Children

We have analyzed this rule under Executive Order 13045, Protection of Children from Environmental Health Risks and Safety Risks. This rule is not an economically significant rule and does not create an environmental risk to health or risk to safety that may disproportionately affect children.

Environment

We have considered the environmental impact of this rule and concluded that under figure 2–1, paragraph (32)(e), of Commandant Instruction M16475.lD, this rule is categorically excluded from further environmental documentation.

Indian Tribal Governments

This rule does not have tribal implications under Executive Order 13175, Consultation and Coordination with Indian Tribal Governments, because it does not have a substantial direct effect on one or more Indian tribes, on the relationship between the Federal Government and Indian tribes, or on the distribution of power and responsibilities between the Federal Government and Indian tribes.

Energy Effects

We have analyzed this rule under Executive Order 13211, Actions Concerning Regulations That Significantly Affect Energy Supply, Distribution, or Use. We have determined that it is not a ''significant

energy action'' under that order because it is not a ''significant regulatory action'' under Executive Order 12866 and is not likely to have a significant adverse effect on the supply, distribution, or use of energy. It has not been designated by the Administrator of the Office of Information and Regulatory Affairs as a significant energy action. Therefore, it does not require a Statement of Energy Effects under Executive Order 13211.

List of Subjects in 33 CFR Part 117

Bridges.

For the reasons discussed in the preamble, the Coast Guard amends 33 CFR Part 117 as follows:

PART 117—DRAWBRIDGE OPERATION REGULATIONS

1. The authority citation for part 117 continues to read as follows:

Authority: 33 U.S.C. 499; 49 CFR 1.46; 33 CFR 1.05–1(g); Section 117.255 also issued under authority of Pub. L. 102–587, 106 Stat. 5039.

2. In section § 117.319, revise paragraph (a) and add paragraph (c) to read as follows:

§ 117.319 Oklawaha River.

(a) The draw of the Sharpes Ferry (SR 40) bridge, mile 55.1 shall open on signal if at least three hours notice is given.

* * * * *

(c) The draw of the Muclan Farms bridge, mile 63.9, need not open for the passage of vessels.

Dated: July 19, 2002.

J.S. Carmichael,

Rear Admiral, U.S. Coast Guard, Commander, Seventh Coast Guard District.

[FR Doc. 02–19562 Filed 8–1–02; 8:45 am]

BILLING CODE 4910–15–P

DEPARTMENT OF TRANSPORTATION

Coast Guard

33 CFR Part 165

[CGD05–01–046]

RIN 2115–AE84

Regulated Navigation Area; Chesapeake Bay Entrance and Hampton Roads, VA and Adjacent Waters

AGENCY: Coast Guard, DOT.

ACTION: Direct final rule; confirmation of effective date.

SUMMARY: On January 28, 2002, we published a direct final rule. The rule notified the public of our excluding warships or other vessels owned, leased, or operated by the U.S. Government from certain carriage requirements for navigational charts and publications by allowing the use of approved electronic systems for charting and navigation while operating in the Chesapeake Bay Regulated Navigation Area. We received no comments on the rule; therefore, this rule will go into effect as scheduled.

DATES: The effective date of this direct final rule was April 29, 2002.

FOR FURTHER INFORMATION CONTACT: LTjg Anne Grabins, Fifth Coast Guard District Aids to Navigation and Waterways Management Branch, at (757) 398–6559.

SUPPLEMENTARY INFORMATION:

On May 2, 2001, the Coast Guard published in the **Federal Register** a direct final rule that amended 33 CFR part 164, specifically § 164.01 paragraphs (a) and (c) (66 FR 21864). The amendment exempts public vessels equipped with electronic charting and navigation systems from paper chart carriage requirements. This geographically broad rule, which became effective July 31, 2001 (66 FR 42753, August 15, 2001), applies to public vessels operating in the navigable waters of the United States. A separate section of the CFR, however, still requires public vessels operating in the Chesapeake Bay Regulated Navigation Area (RNA) to carry paper charts (33 CFR 165.501(d)(7)). We amended the Chesapeake Bay RNA regulation to bring its navigation requirements for public vessels operating in this area in alignment with the requirements for all other U.S. waters.

The direct final rule (67 FR 3812, January 28, 2002) excludes public vessels from the corrected paper chart requirements contained in 33 CFR 165.501(d)(7), when operating in the Chesapeake Bay RNA. This exclusion only applies to public vessels equipped with an electronic charting and navigation systems that meet the standards approved by the Federal agency exercising operational control of the vessel.

Dated: July 19, 2002.

Arthur E. Brooks,

Captain, U.S. Coast Guard, Acting Commander, Fifth Coast Guard District.

[FR Doc. 02–19549 Filed 8–1–02; 8:45 am]

BILLING CODE 4910–15–P

DEPARTMENT OF TRANSPORTATION

Coast Guard

33 CFR Part 165

[CGD1–02–094]

RIN 2115–AA97

Safety Zone; Salem Heritage Days Fireworks, Salem, MA

AGENCY: Coast Guard, DOT.

ACTION: Temporary final rule.

SUMMARY: The Coast Guard is establishing a temporary safety zone for the Salem Heritage Days Fireworks, to be held on August 17, 2002, in Salem Harbor, Salem, MA. The safety zone will temporarily close all waters of Salem Harbor within a four hundred (400) yard radius of the fireworks barge. The possibility of firework debris entering the waterway necessitates the need for a safety zone to prevent any potential marine casualties. This rule prohibits entry into or movement within this portion of Salem Harbor and is needed to protect the maritime public from the hazards posed by a fireworks display.

DATES: This rule is effective from 9 p.m. until 10 p.m. on August 17, 2002.

ADDRESSES: Documents indicated in this preamble as being available in the docket, are part of docket (CGD01–02–094) and are available for inspection or copying at Marine Safety Office Boston, 455 Commercial Street, Boston, MA between the hours of 8 a.m. and 3 p.m., Monday through Friday, except Federal holidays.

FOR FURTHER INFORMATION CONTACT: Chief Petty Officer Daniel Dugery, Marine Safety Office Boston, Waterways Management Division, at (617) 223–3000.

SUPPLEMENTARY INFORMATION:

Regulatory History

Pursuant to 5 U.S.C. 553, a notice of proposed rulemaking (NPRM) was not published for this regulation. Good cause exists for not publishing a NPRM and for making this regulation effective in less than 30 days after **Federal Register** publication. Information about this event was not provided to the Coast Guard until July 17, 2002, making it impossible to draft or publish a NPRM or a final rule 30 days in advance of its effective date. Any delay in implementing this rule would be contrary to the public interest, since immediate action is needed to prevent traffic from transiting a portion of Salem Harbor, Salem, Massachusetts, and provide for the safety of life on

navigable waters. Additionally, vessels will only be limited from the area of the safety zone for 1 hour, the zone will have negligible impact on vessel transits due to the fact that vessels can safely transit outside the zone in the majority of Salem Harbor, and vessels are not precluded from using any portion of the waterway except the safety zone area itself.

Background and Purpose

The Town of Salem is holding a fireworks display for its Salem Heritage Days celebration. This rule establishes a safety zone on all waters in Salem Harbor within a four hundred (400) yard radius around the fireworks barge located at 42°32′27″ N, 070°051′74″ W (NAD 83). The safety zone is in effect from 9 p.m. until 10 p.m. August 17, 2002. This rule prohibits entry into or movement within this portion of Salem Harbor and is needed to protect the maritime public from the dangers posed by this event. Marine traffic may transit safely outside of the safety zone during the event. The Captain of the Port anticipates negligible impact on vessel traffic due to this event. Public notifications will be made prior to the effective period via local notice to mariners and marine information broadcasts.

Regulatory Evaluation

This rule is not a ''significant regulatory action'' under section 3(f) of Executive Order 12866, Regulatory Planning and Review, and does not require an assessment of potential costs and benefits under section 6(a)(3) of that Order. The Office of Management and Budget has not reviewed it under that Order. It is not ''significant'' under the regulatory policies and procedures of the Department of Transportation (DOT) (44 FR 11040, February 26, 1979).

The Coast Guard expects the economic impact of this rule to be minimal enough that a full Regulatory Evaluation under paragraph 10e of the regulatory policies and procedures of DOT is unnecessary.

Although this rule prevents traffic from transiting into a portion of Salem Harbor during this event, the effect of this rule will be negligible for several reasons: Vessels will only be restricted from the safety zone for 1 hour, vessels may safely transit outside of the safety zone without restriction, and advance notifications will be made to the local maritime community by marine information broadcasts.

Small Entities

Under the Regulatory Flexibility Act (5 U.S.C. 601–612), the Coast Guard considered whether this rule would have a significant economic impact on a substantial number of small entities. The term ''small entities'' comprises small businesses, not-for-profit organizations that are independently owned and operated and are not dominant in their fields, and governmental jurisdictions with populations of less than 50,000.

The Coast Guard certifies under 5 U.S.C. 605(b) that this rule will not have a significant economic impact on a substantial number of small entities. This rule will affect the following entities, some of which may be small entities: the owners or operators of vessels intending to transit or anchor in a portion of Salem Harbor from 9 p.m. until 10 p.m. August 17, 2002. For reasons enumerated under the *Regulatory Evaluation* section above this rule will have a negligible economic impact on small entities.

Collection of Information

This rule would call for no new collection of information under the Paperwork Reduction Act of 1995 (44 U.S.C. 3501–3520).

Federalism

The Coast Guard analyzed this rule under Executive Order 13132, Federalism, and has determined that this rule does not have implications for federalism under that Order.

Unfunded Mandates Reform Act

The Unfunded Mandates Reform Act of 1995 (2 U.S.C. 1531–1538) governs the issuance of Federal regulations that require unfunded mandates. An unfunded mandate is a regulation that requires a State, local, or tribal government or the private sector to incur direct costs without the Federal Government's having first provided the funds to pay those costs. This rule would not impose an unfunded mandate.

Taking of Private Property

This rule would not effect a taking of private property or otherwise have taking implications under Executive Order 12630, Governmental Actions and Interference with Constitutionally Protected Property Rights.

Civil Justice Reform

This rule meets applicable standards in sections 3(a) and 3(b)(2) of Executive Order 12988, Civil Justice Reform, to minimize litigation, eliminate ambiguity, and reduce burden.

Protection of Children

The Coast Guard analyzed this rule under Executive Order 13045, Protection of Children from Environmental Health Risks and Safety Risks. This rule is not an economically significant rule and does not pose an environmental risk to health or risk to safety that may disproportionately affect children.

Indian Tribal Governments

This proposed rule does not have tribal implications under Executive Order 13175, Consultation and Coordination with Indian Tribal Governments. A rule with tribal implications has a substantial direct effect on one or more Indian tribes, on the relationship between the Federal Government and Indian tribes, or on the distribution of power and responsibilities between the Federal Government and Indian tribes.

Environment

The Coast Guard considered the environmental impact of this rule and concluded that, under figure 2–1, (34)(g), of Commandant Instruction M16475.lD, this rule is categorically excluded from further environmental documentation. A ''Categorical Exclusion Determination'' is available in the docket where indicated under **ADDRESSES.**

Energy Effects

We have analyzed this rule under Executive Order 13211, Actions Concerning Regulations that Significantly Affect Energy Supply, Distribution, or Use. We have determined that it is not a ''significant energy action'' under that Order because it is not a ''significant regulatory action'' under Executive Order 12866 and is not likely to have a significant adverse effect on the supply, distribution, or use of energy. It has not been designated by the Administrator of the Office of Information and Regulatory Affairs as a significant energy action. Therefore, it does not require a Statement of Energy Effects under Executive Order 13211.

List of Subjects in 33 CFR Part 165

Harbors, Marine safety, Navigation (water), Reporting and recordkeeping requirements, Security measures, Waterways.

For the reasons discussed in the preamble, the Coast Guard proposes to amend 33 CFR part 165 as follows:

PART 165—REGULATED NAVIGATION AREAS AND LIMITED ACCESS AREAS

1. The authority citation for part 165 continues to read as follows:

Authority: 33 U.S.C. 1231; 50 U.S.C. 191; 33 CFR 1.05–1(g), 6.04–1, 6.04–6, and 160.5; 49 CFR 1.46.

2. From 9 p.m. until 10 p.m. on August 17, 2002, add temporary § § 165.T01–094 to read as follows:

§ 165.T01–094 Safety Zone; Salem Heritage Days Fireworks, Salem, Massachusetts.

(a) *Location.* The following area is a safety zone:

All waters of Salem Harbor within a four hundred (400) yard radius of the fireworks barge located in Salem Harbor, Salem, MA, at 42°32′27″ N, 070°051′74″ W. All coordinates are North American Datum 1983.

(b) *Effective date.* This section is effective from 9 p.m. until 10 p.m. on August 17, 2002.

(c) *Regulations.* (1) In accordance with the general regulations in § 165.23 of this part, entry into or movement within this zone is prohibited unless authorized by the Captain of the Port Boston.

(2) All vessel operators shall comply with the instructions of the COTP or the designated on-scene U.S. Coast Guard patrol personnel. On-scene Coast Guard patrol personnel including commissioned, warrant, and petty officers of the Coast Guard on board Coast Guard, Coast Guard Auxiliary, local, state, and federal law enforcement vessels.

Dated: July 19, 2002.

B.M. Salerno,

Captain, U. S. Coast Guard, Captain of the Port, Boston, Massachusetts.

[FR Doc. 02–19548 Filed 8–1–02; 8:45 am]

BILLING CODE 4910–15–P

POSTAL SERVICE

39 CFR Part 927

Regulations Dealing With Penalties or Fines, Deductions, and Damages Related to Transportation of Mail

AGENCY: Postal Service.

ACTION: Final rule.

SUMMARY: This rule revises postal regulations dealing with civil penalties, fines, deductions and damages assessed in the administration of the mail transportation statutes. The rule provides detailed procedures for the imposition of penalties and other assessments and conforms the regulations to the current organization of the Postal Service.

EFFECTIVE DATE: August 2, 2002.

FOR FURTHER INFORMATION CONTACT: Frank Panico, Manager, International Transportation and Network Support, International Network Operations at (202) 268–8058.

SUPPLEMENTARY INFORMATION: This change is being made to reflect:

1. United States Postal Service's organizational realignment.

2. Technological enhancements which have affected the methodology of recording and adjudicating air carrier irregularities.

This has contributed to the elimination of the mid level review and adjudication process. These changes are detailed in section 927.3. This new process is expected to improve service performance and expedite the irregularity process for international and military mail.

List of Subjects in 39 CFR Part 927

Administrative practice and procedure, Air carriers, Government contracts, Maritime carriers, Penalties.

For the reasons set forth in the preamble, 39 CFR part 927 is revised to read as follows:

PART 927—RULES OF PROCEDURE RELATING TO FINES, DEDUCTIONS, AND DAMAGES

Sec
927.1 Noncontractual carriage of international mail by vessel.
927.2 Noncontractual air service for international and military mail.
927.3 Other remedies.

Authority: 39 U.S.C. 401, 2601 Chap. 56 Section 5604; 49 U.S.C. 1357, 1471.

§ 927.1 Noncontractual carriage of international mail by vessel.

(a) *Report of infraction.* Where evidence is found or reported that a carrier of mail by vessel which has transported mail pursuant to the provisions of Chapter 4, USPS Purchasing Manual, has unreasonably or unnecessarily delayed the mails, or committed other delinquencies in the transportation of mail, has failed to carry the mail in a safe and secure manner, or has caused loss or damage to the mail, the facts will be reported to International Network Operations, Headquarters.

(b) *Review, investigation, recommendation.* International Network Operations will investigate the matter, record findings of fact, make a recommendation concerning the need for imposition of fine or penalty with reasons for the recommendation, and will advise the carrier of the recommendation.

(c) *Penalty action.* International Network Operations, upon review of the record, may impose a fine or penalty against a carrier for any irregularity properly documented, whether or not penalty action has been recommended. A tentative decision of International Network Operations to take penalty action will be set forth in detail the facts and reasons upon which the determination is based. International Network Operations will send the tentative decision, including notice of the irregularities found and the amount of fine or penalty proposed, to the carrier. The carrier may present a written defense to the proposed action within 21 days after receipt of the tentative decision. International Network Operations will advise the carrier of the final decision.

(d) *Appeal.* If the final decision includes a penalty International Network Operations will advise the carrier that it may, within 30 days, appeal the action in writing to the Vice President, Network Operations Management, U.S. Postal Service Headquarters and that its written appeal should include all facts and arguments upon which the carrier relies in support of the appeal. If an appeal is not received, International Network Operations will close the record. When an appeal is taken, the Vice President, Network Operations Management will review the complete record the decide the appeal. He will advise the carrier of the decision in writing and will take actions consistent with that decision. The Vice President, Network Operations Management, may sustain, rescind, or compromise a fine or penalty. The decision of the Vice President, Network Operations Management on appeal shall be the final decision of the Postal Service. The Postal Service may, in its discretion, deduct from payment otherwise due the carrier an amount necessary to satisfy the penalty action taken under this section.

(e) *Details of administration.* For further administrative details, see USPS Purchasing Manual, chapter 4.

§ 927.2 Noncontractual air service for international and military mail.

(a) *Report of infraction.* Each mail handling irregularity will be reported in the prescribed format by the cognizant postal official or designated representative. As soon as possible the reporting authority will ask the local representative of the air carrier to provide an explanation of the irregularity. A summary of the explanation, if any, will be entered in

the record. A copy of the report will be provided to the local station manager of the air carrier concerned at the close of each tour or not less frequently than each 24 hours.

(b) *Carrier conferences.* At least one a month, postal officials will schedule meetings with the local representatives of the affected air carriers to discuss the reported irregularities. The carrier's representative will be advised of any irregularity for which the reporting authority will recommend penalty action. The carrier's representative will be offered the opportunity to comment on any irregularity, and any comments will be attached and/or be made part of the record. The reports on which penalty action is recommended will then be processed by International Network Operations, Postal Headquarters.

(c) *Review, investigation, penalty action.* International Network Operations will review the matter and advise the carrier of the recommendations. The carrier has 21 days from receipt of notice to dispute the recommended penalties. In those instances which the carrier has disputed the facts alleged by the reporting authority, International Network Operations will investigate the matter to resolve the differences. International Network Operations, upon review of the record, may impose a fine or penalty against an air carrier for any irregularity properly documented, whether or not penalty action has been recommended. International Network Operations will send the decision, including notice of the irregularities alleged and the amount of fine or penalty proposed to the carrier. The Postal Service may, in its discretion, deduct from payment otherwise due the air carrier an amount necessary to satisfy the penalty action taken under this section.

(d) *Appeal.* If the final decision includes a penalty, International Network Operations will advise the carrier that it may, within 30 days, appeal the action in writing to the Vice President, Network Operations Management, Postal Headquarters, and that its written appeal should include all facts and arguments upon which the carrier relies in support of the appeal. If an appeal is not received, International Network Operations will close the file. When an appeal is taken, the Vice President, Network Operations Management, will review the complete record and decide the appeals. He will advise the carrier of the decision in writing and will take action consistent with that decision. The Vice President, Network Operations Management, may sustain, rescind, or compromise a fine or penalty. The decision of the Vice President, Network Operations Management, on appeal shall be the final decision of the Postal Service. The Postal Service, may, in its discretion, deduct from pay otherwise due the air carrier an amount necessary to satisfy the penalty action taken under this section.

(e) *Details of administration.* For further administrative details, forms, and other implementing materials adapted to the respective modes of transportation, see International Mail Operations, Handbook T–5, chapter 5.

§ 927.3 Other remedies.

The procedures and other requirements of this part apply only where the Postal Service proposes to assess penalties, fines, deductions, or damages. This part does not limit other remedies available to the Postal Service, including such remedies as summary action to withhold tender of mail to protect the public interest in the event of major irregularities such as theft, deliberate loss, damage, abandonment of the mail or service failures by the air carrier.

Stanley F. Mires,

Chief Counsel, Legislative.

[FR Doc. 02–19546 Filed 8–1–02; 8:45 am]

BILLING CODE 7710–12–P

ENVIRONMENTAL PROTECTION AGENCY

40 CFR Part 180

[OPP–2002–0158; FRL–7188–7]

Fludioxonil; Pesticide Tolerance

AGENCY: Environmental Protection Agency (EPA).

ACTION: Final rule.

SUMMARY: This regulation establishes tolerances for residues of fludioxonil in or on bushberry subgroup, caneberry subgroup, fruit, stone, group, juneberry, lingonberry, pistachio, salal, and watercress. Interregional Research Project Number 4 (IR–4) requested these tolerances under the Federal Food, Drug, and Cosmetic Act, as amended by the Food Quality Protection Act of 1996.

DATES: This regulation is effective August 2, 2002. Objections and requests for hearings, identified by docket ID number OPP–2002–0158 must be received on or before October 1, 2002.

ADDRESSES: Written objections and hearing requests may be submitted by mail, in person, or by courier. Please follow the detailed instructions for each method as provided in Unit VI. of the **SUPPLEMENTARY INFORMATION**. To ensure proper receipt by EPA, your objections and hearing requests must identify docket ID number OPP–2002–0158 in the subject line on the first page of your response.

FOR FURTHER INFORMATION CONTACT: By mail: Shaja R. Brothers, Registration Division (7505C), Office of Pesticide Programs, Environmental Protection Agency, 1200 Pennsylvania Ave., NW.,Washington, DC 20460; telephone number: (703) 308–3194; e-mail address: brothers.shaja@epa.gov.

SUPPLEMENTARY INFORMATION:

I. General Information

A. Does this Action Apply to Me?

You may be affected by this action if you are an agricultural producer, food manufacturer, or pesticide manufacturer. Potentially affected categories and entities may include, but are not limited to:

Categories	NAICS codes	Examples of potentially affected entities
Industry	111 112 311 32532	Crop production Animal production Food manufacturing Pesticide manufacturing

This listing is not intended to be exhaustive, but rather provides a guide for readers regarding entities likely to be affected by this action. Other types of entities not listed in the table could also be affected. The North American Industrial Classification System (NAICS) codes have been provided to assist you and others in determining whether or not this action might apply to certain entities. If you have questions regarding the applicability of this action to a particular entity, consult the person listed under **FOR FURTHER INFORMATION CONTACT**.

B. How Can I Get Additional Information, Including Copies of this Document and Other Related Documents?

1. *Electronically.*You may obtain electronic copies of this document, and certain other related documents that might be available electronically, from the EPA Internet Home Page at http://www.epa.gov/. To access this document, on the Home Page select ''Laws and Regulations,'' ''Regulations and Proposed Rules,'' and then look up the entry for this document under the ''**Federal Register**—Environmental Documents.'' You can also go directly to the **Federal Register** listings at http://

www.epa.gov/fedrgstr/. A frequently updated electronic version of 40 CFR part 180 is available at http://www.access.gpo.gov/nara/cfr/cfrhtml_00/Title_40/40cfr180_00.html, a beta site currently under development. To access the OPPTS Harmonized Guidelines referenced in this document, go directly to the guidelines at http://www.epa.gov/opptsfrs/home/guidelin.htm.

2. *In person*. The Agency has established an official record for this action under docket ID number OPP–2002–0158. The official record consists of the documents specifically referenced in this action, and other information related to this action, including any information claimed as Confidential Business Information (CBI). This official record includes the documents that are physically located in the docket, as well as the documents that are referenced in those documents. The public version of the official record does not include any information claimed as CBI. The public version of the official record, which includes printed, paper versions of any electronic comments submitted during an applicable comment period is available for inspection in the Public Information and Records Integrity Branch (PIRIB), Rm. 119, Crystal Mall #2, 1921 Jefferson Davis Hwy., Arlington, VA, from 8:30 a.m. to 4 p.m., Monday through Friday, excluding legal holidays. The PIRIB telephone number is (703) 305–5805.

II. Background and Statutory Findings

In the **Federal Register** of March 29, 2000 (65 FR 16602) (FRL–6495–5) and May 1, 2002 (67 FR 21671) (FRL–6833–4), EPA issued notices pursuant to section 408 of the Federal Food, Drug, and Cosmetic Act (FFDCA), 21 U.S.C. 346a, as amended by the Food Quality Protection Act of 1996 (FQPA) (Public Law 104–170), announcing the filing of pesticide petitions (PP 8E5026, 9E6049, 2E6359, 2E6365, 2E6377, and 2E6393]) by IR–4, New Jersey Agricultural Experiment Station, P. O. Box 231 Rutgers University, New Brunswick, NJ 08903. These notices included summaries of the petitions prepared by Novartis Crop Protection Inc., and Syngenta Crop Protection Inc., the registrants. There were no comments received in response to the notices of filing.

The petitions requested that 40 CFR 180.516 be amended by establishing tolerances for residues of the fungicide fludioxonil, (4-(2,2-difluoro- 1,3-benzodioxol-4-yl)-1 *H*-pyrrole-3-carbonitrile), in or on bushberry subgroup at 2.0 part per million (ppm), caneberry subgroup at 5.0 ppm, juneberry at 2.0 ppm, lingonberry at 2.0 ppm, pistachio at 0.10 ppm, salal at 2.0 ppm, stone fruit group at 2.0 ppm, and watercress at 7.0 ppm. The petition for the stone fruit group was amended to propose a tolerance for fludioxonil at 5.0 ppm.

Section 408(b)(2)(A)(i) of the FFDCA allows EPA to establish a tolerance (the legal limit for a pesticide chemical residue in or on a food) only if EPA determines that the tolerance is ''safe.'' Section 408(b)(2)(A)(ii) defines ''safe'' to mean that '' there is a reasonable certainty that no harm will result from aggregate exposure to the pesticide chemical residue, including all anticipated dietary exposures and all other exposures for which there is reliable information.'' This includes exposure through drinking water and in residential settings, but does not include occupational exposure. Section 408(b)(2)(C) requires EPA to give special consideration to exposure of infants and children to the pesticide chemical residue in establishing a tolerance and to ''ensure that there is a reasonable certainty that no harm will result to infants and children from aggregate exposure to the pesticide chemical residue....''

EPA performs a number of analyses to determine the risks from aggregate exposure to pesticide residues. For further discussion of the regulatory requirements of section 408 and a complete description of the risk assessment process, see the final rule on Bifenthrin Pesticide Tolerances (62 FR 62961, November 26, 1997) (FRL–5754–7).

III. Aggregate Risk Assessment and Determination of Safety

Consistent with section 408(b)(2)(D), EPA has reviewed the available scientific data and other relevant information in support of these actions. EPA has sufficient data to assess the hazards of and to make a determination on aggregate exposure, consistent with section 408(b)(2), for tolerances for residues of fludioxonil in or on the bushberry subgroup at 2.0 ppm, caneberry subgroup at 5.0 ppm, fruit, stone, group at 5.0 ppm, juneberry at 2.0 ppm, lingonberry at 2.0 ppm, pistachio at 0.10 ppm, salal at 2.0 ppm, and watercress at 7.0 ppm. EPA's assessment of exposures and risks associated with establishing these tolerances follow.

A. Toxicological Profile

EPA has evaluated the available toxicity data and considered its validity, completeness, and reliability as well as the relationship of the results of the studies to human risk. EPA has also considered available information concerning the variability of the sensitivities of major identifiable subgroups of consumers, including infants and children. The nature of the toxic effects caused by fludioxonil are discussed in Unit III.A. of the final rule on fludioxonil, which published in the **Federal Register** of December 29, 2000 (65 FR 82927) (FRL–6760–9). Additionally, recent toxicological studies (May 2002) concluded findings in conjunction to the toxicological profile noted in Unit III.A. of the final rule on fludioxonil (65 FR 82927). These studies are shown in Table 1:

TABLE 1.—CARCINOGENIC AND OTHER TOXICITY

Guideline No.	Study Type	Results
870.4200b	Carcino-genicity rats	NOAEL = 590 mg/kg/day (M) and 715 mg/kg/day (F). LOAEL: 851 mg/kg/day (M) and 1,008 mg/kg/day (F) based on reduced survival (F), decreased body weights (M), bile duct hyperplasia (M) and severe nephropathy (both sexes). No evidence of carcinogenicity.
870.5395	*In vivo* Rat hepatocyte micronucleus assay	Male rats were orally dosed at 50, 250, and 1,250 mg/kg and hepatocytes were harvested. There was no evidence of a significant increase in micronucleated hepatocytes in treated groups in comparison to controls.
870.5550	Unscheduled DNA synthesis assay	There was no evidence that unscheduled DNA synthesis, as determined by nuclear silver grain counts, was induced in hepatocyte cultures obtained from male rats dosed at 2,500 or 5,000 mg/kg.

B. Toxicological Endpoints

The dose at which no adverse effects are observed (the NOAEL) from the toxicology study identified as appropriate for use in risk assessment is used to estimate the toxicological level of concern (LOC). However, the lowest dose at which adverse effects of concern are identified (the LOAEL) is sometimes used for risk assessment if no NOAEL was achieved in the toxicology study selected. An uncertainty factor (UF) is applied to reflect uncertainties inherent in the extrapolation from laboratory animal data to humans and in the variations in sensitivity among members of the human population as well as other unknowns. An UF of 100 is routinely used, 10X to account for interspecies differences and 10X for intra species differences.

For dietary risk assessment (other than cancer) the Agency uses the UF to calculate an acute or chronic reference dose (acute RfD or chronic RfD) where the RfD is equal to the NOAEL divided by the appropriate UF (RfD = NOAEL/UF). Where an additional safety factor is retained due to concerns unique to the FQPA, this additional factor is applied to the RfD by dividing the RfD by such additional factor. The acute or chronic Population Adjusted Dose (aPAD or cPAD) is a modification of the RfD to accommodate this type of FQPA Safety Factor.

For non-dietary risk assessments (other than cancer) the UF is used to determine the LOC. For example, when 100 is the appropriate UF (10X to account for interspecies differences and 10X for intraspecies differences) the LOC is 100. To estimate risk, a ratio of the NOAEL to exposures (margin of exposure (MOE) = NOAEL/exposure) is calculated and compared to the LOC.

The linear default risk methodology (Q*) is the primary method currently used by the Agency to quantify carcinogenic risk. The Q* approach assumes that any amount of exposure will lead to some degree of cancer risk. A Q* is calculated and used to estimate risk which represents a probability of occurrence of additional cancer cases (e.g., risk is expressed as 1×10^{-6} or one in a million). Under certain specific circumstances, MOE calculations will be used for the carcinogenic risk assessment. In this non-linear approach, a ''point of departure'' is identified below which carcinogenic effects are not expected. The point of departure is typically a NOAEL based on an endpoint related to cancer effects though it may be a different value derived from the dose response curve. To estimate risk, a ratio of the point of departure to exposure (MOE_{cancer} = point of departure/exposures) is calculated. A summary of the toxicological endpoints for fludioxonil used for human risk assessment is shown in the following Table 2:

TABLE 2.—SUMMARY OF TOXICOLOGICAL DOSE AND ENDPOINTS FOR FLUDIOXONIL FOR USE IN HUMAN RISK ASSESSMENT

Exposure Scenario	Dose Used in Risk Assessment, UF	FQPA SF and Level of Concern for Risk Assessment	Study and Toxicological Effects
Acute Dietary females 13–50 years of age	NOAEL = 100 mg/kg/day UF = 100 Acute RfD = 1.0 mg/kg/day	FQPA SF = 1X aPAD = acute RfD ÷ FQPA SF = 1.0 mg/kg/day	Developmental Toxicity Study - rat Developmental LOAEL = 1,000 mg/kg/day based on increased incidence of fetuses and litters with dilated renal pelvis and dilated ureter
Chronic Dietary all populations	NOAEL= 3.3 mg/kg/day UF = 100 Chronic RfD = 0.03 mg/kg/day	FQPA SF = 1X cPAD = chronic RfD ÷ FQPA SF = 0.03 mg/kg/day	1 year chronic toxicity study - dog LOAEL = 35.5 mg/kg/day based on decreased weight gain in female dogs
Incidental Oral, Short-Term	NOAEL = 10 mg/kg/day	LOC for MOE = 100	Rabbit developmental study LOAEL = 100 mg/kg/day based on decreased weight gain during gestation
Incidental Oral, Intermediate-Term	NOAEL = 3.3 mg/kg/day	LOC for MOE = 100	1 year chronic toxicity study - dog LOAEL = 35.5 mg/kg/day based on decreased weight gain in female dogs
Short-and Intermediate Term Dermal (1–30 days and 1–6 months) (Residential)	None	No systemic toxicity was seen at the limit dose (1,000 mg/kg/day) in the 28–day dermal toxicity study in rats	Endpoint was not selected
Long-Term (several months-lifetime) Dermal (Residential)	Oral study NOAEL = 3.3 mg/kg/day (dermal penetration = 40%)	LOC for MOE = 100 (Occupational) LOC for MOE = 100 (Residential)	1 year chronic toxicity study - dog LOAEL = 35.5 mg/kg/day based on decreased weight gain in female dogs
Short-Term (1–30 Days) Inhalation (Residential)	Oral NOAEL = 10 mg/kg/day (inhalation absorption rate = 100%)	LOC for MOE = 100 (Occupational) LOC for MOE = 100 (Residential)	Rabbit developmental study LOAEL = 100 mg/kg/day based on decreased weight gain during gestation
Intermediate-term (1 month – 6 months) Inhalation (Residential)	Oral NOAEL = 3.3 mg/kg/day (inhalation absorption rate = 100%)	LOC for MOE = 100 (Occupational) LOC for MOE = 100 (Residential)	1 year chronic toxicity study - dog LOAEL = 35.5 mg/kg/day based on decreased weight gain in female dogs

TABLE 2.—SUMMARY OF TOXICOLOGICAL DOSE AND ENDPOINTS FOR FLUDIOXONIL FOR USE IN HUMAN RISK ASSESSMENT—Continued

Exposure Scenario	Dose Used in Risk Assessment, UF	FQPA SF and Level of Concern for Risk Assessment	Study and Toxicological Effects
Long-Term (several months-lifetime) Inhalation (Residential)	Oral NOAEL = 3.3 mg/kg/day (inhalation absorption rate = 100%)	LOC for MOE = 100 (Occupational) LOC for MOE = 100 (Residential)	1 year chronic toxicity study - dog LOAEL = 35.5 mg/kg/day based on decreased weight gain in female dogs
Cancer (oral, dermal, inhalation)	''Group D'' - not classifiable as to human carcinogenicity via relevant routes of exposure	Not applicable	There was no evidence of carcinogenicity in mice when tested up to the limited dose 7,000 ppm. There was no evidence of carcinogenicity in male rats, but there was a statistically significant increase, both trend and pairwise, of combined hepatocellular tumors in female rats. The pairwise increase for combined tumors was significant at p=0.03, which is not a strong indication of a positive effect. In addition, the increase in these tumors was within, but at the high end, of the historical controls.

C. Exposure Assessment

1. *Dietary exposure from food and feed uses.* Tolerances have been established (40 CFR 180.516) for the residues of fludioxonil, in or on a variety of raw agricultural commodities ranging from 0.01 ppm to 7.0 ppm as follows: cotton gin byproducts; flax, seed; forage, fodder, and straw of cereal grains; fruiting vegetables except cucurbits; grain, cereal; grape; grass, forage, fodder and hay, group; herbs and spices; leafy vegetables except brassica; leaves and roots of tuber vegetables; legume vegetables; non-grass animal feed; onion, dry bulb; onion, green; peanut hay; peanuts meat (hulls removed); rape forage; rape seed; safflower, seed; strawberry; sunflower, seed; undelinted cottonseed; vegetable, brassica, leafy, group; vegetable, bulb, group; vegetable, cucurbit, group; vegetable, legume, foliage; and vegetable, root and tuber, group. Risk assessments were conducted by EPA to assess dietary exposures from fludioxonil in food as follows:

i. *Acute Exposure.* Acute dietary risk assessments are performed for a food-use pesticide if a toxicological study has indicated the possibility of an effect of concern occurring as a result of a one day or single exposure. The Dietary Exposure Evaluation Model (DEEM™) analysis evaluated the individual food consumption as reported by respondents in the USDA 1989–1992 nationwide Continuing Surveys of Food Intake by Individuals (CSFII) and accumulated exposure to the chemical for each commodity. The following assumptions were made for the acute exposure assessments: A conservative acute analysis was performed for the females 13–50 years old population subgroup using published and proposed tolerance levels, default concentration factors, and 100% CT assumptions for all commodities.

ii. *Chronic Exposure.* In conducting this chronic dietary risk assessment the Dietary Exposure Evaluation Model (DEEM™) analysis evaluated the individual food consumption as reported by respondents in the USDA 1989–1992 nationwide Continuing Surveys of Food Intake by Individuals (CSFII) and accumulated exposure to the chemical for each commodity. The following assumptions were made for the chronic exposure assessments: A chronic analysis was performed for the U.S. population, and other population subgroups using published and proposed tolerance levels, default concentration factors, and 100% CT assumptions for all commodities.

iii. *Cancer.* In accordance with the EPA Draft Guidelines for Carcinogen Risk Assessment (July, 1999), the Agency classified fludioxonil as a ''Group D'' - not classifiable as to human carcinogenicity.

2. *Dietary exposure from drinking water.* The Agency lacks sufficient monitoring exposure data to complete a comprehensive dietary exposure analysis and risk assessment for fludioxonil in drinking water. Because the Agency does not have comprehensive monitoring data, drinking water concentration estimates are made by reliance on simulation or modeling taking into account data on the physical characteristics of fludioxonil.

The Agency uses the First Index Reservoir Screening Tool (FIRST) or the Pesticide Root Zone/Exposure Analysis Modeling System (PRZM/EXAMS), to produce estimates of pesticide concentrations in an index reservoir. The SCI-GROW model is used to predict pesticide concentrations in shallow groundwater. For a screening-level assessment for surface water EPA will use FIRST (a tier 1 model) before using PRZM/EXAMS (a tier 2 model). The FIRST model is a subset of the PRZM/EXAMS model that uses a specific high-end runoff scenario for pesticides. While both FIRST and PRZM/EXAMS incorporate an index reservoir environment, the PRZM/EXAMS model includes a percent crop area factor as an adjustment to account for the maximum percent crop coverage within a watershed or drainage basin.

None of these models include consideration of the impact processing (mixing, dilution, or treatment) of raw water for distribution as drinking water would likely have on the removal of pesticides from the source water. The primary use of these models by the Agency at this stage is to provide a coarse screen for sorting out pesticides for which it is highly unlikely that drinking water concentrations would ever exceed human health levels of concern.

Since the models used are considered to be screening tools in the risk assessment process, the Agency does not use estimated environmental concentrations (EECs) from these models to quantify drinking water exposure and risk as a %RfD or %PAD. Instead drinking water levels of comparison (DWLOCs) are calculated and used as a point of comparison against the model estimates of a

pesticide's concentration in water. DWLOCs are theoretical upper limits on a pesticide's concentration in drinking water in light of total aggregate exposure to a pesticide in food, and from residential uses. Since DWLOCs address total aggregate exposure to fludioxonil they are further discussed in the aggregate risk sections in Unit II.E. of this document.

Fludioxonil is relatively immobile in soil (K_{oc} = 991 − 2440 ml/g). Laboratory adsorption-desorption studies suggest that the parent compound would be bound to soil and have a relatively low potential to leach to ground water and move in runoff to surface water. Degradates of fludioxonil are highly mobile and may enter both surface and ground water. Based on their low K_{oc} values, two of the three photolytic degradates identified in the laboratory studies (CGA–192155 and CGA–339833) are expected to be highly mobile in the environment. The third major photolytic degradate was found to be extremely unstable in the batch-equilibrium system; therefore, the mobility of this degradate could not be determined.

Tier I models, FIRST and SCI-GROW, were used to derive the surface water and ground water EECs, respectively. According to the proposed label information, the maximum application rate for fludioxonil is 4 lbs ai/Acre/year on turf (maximum single application rate of 0.675 lbs ai/Acre). Application to turf provided the high exposure scenario; therefore, the drinking water EECs were derived from the use on turf.

Based on the [FIRST] model the estimated environmental concentrations (EECs) of fludioxonil for acute and chronic exposures are estimated to be 132 parts per billion (ppb) and 49 ppb, respectively, for surface water.

Based on the SCI GROW model the estimated environmental concentration (EEC) of fludioxonil for ground water is estimated to be 0.11 ppb for both the acute and chronic exposures.

3. *From non-dietary exposure*. The term ''residential exposure'' is used in this document to refer to non-occupational, non-dietary exposure (e.g., for lawn and garden pest control, indoor pest control, termiticides, and flea and tick control on pets).

Fludioxonil is currently registered for use on the following residential non-dietary sites: Based on the registered labels, fludioxonil is used as a protectant fungicide for control of certain diseases of turfgrass and certain foliar, stem and root diseases in ornamentals in residential and commercial landscapes. Medallion® (EPA Reg. No. 100–769) is registered for use on residential lawns and ornamentals. Medallion® is a wettable powder packaged in water-soluble packets, and the current label indicates that this product is ''for professional use only.'' As such, no residential handler (i.e., applicator) exposures are anticipated.

However, short- and intermediate-term dermal (adults and toddlers), and incidental ingestion (toddlers) post-application residential exposures are anticipated based on the use pattern for turfgrass applications detailed on the Medallion® label (specifies that the product be applied at 14-day application intervals, with an annual maximum rate of 2 lbs ai/A/yr, which equates to about 3 applications at the maximum per application rate. Also, fludioxonil has half-lives ranging from 95 to 440 days in thatch sod). A residential post-application dermal assessment was not performed since the risks from short- and intermediate-term dermal exposure are negligible. Short- and intermediate-term dermal endpoints were not selected due to the NOAEL of 1000 mg/kg/day (highest dose tested) in the 28-day dermal toxicity study in rats and also since there were no developmental concerns. EPA has concluded that there are no significant post-application exposures anticipated from treated landscape ornamentals. Therefore, the risk assessment was conducted using the following residential exposure assumption: post-residential lawn applications for toddler incidental ingestion.

4. *Cumulative exposure to substances with a common mechanism of toxicity*. Section 408(b)(2)(D)(v) requires that, when considering whether to establish, modify, or revoke a tolerance, the Agency consider ''available information'' concerning the cumulative effects of a particular pesticide's residues and ''other substances that have a common mechanism of toxicity.''

EPA does not have, at this time, available data to determine whether fludioxonil has a common mechanism of toxicity with other substances or how to include this pesticide in a cumulative risk assessment. Unlike other pesticides for which EPA has followed a cumulative risk approach based on a common mechanism of toxicity, fludioxonil does not appear to produce a toxic metabolite produced by other substances. For the purposes of this tolerance action, therefore, EPA has not assumed that fludioxonil has a common mechanism of toxicity with other substances. For information regarding EPA's efforts to determine which chemicals have a common mechanism of toxicity and to evaluate the cumulative effects of such chemicals, see the final rule for Bifenthrin Pesticide Tolerances (62 FR 62961, November 26, 1997).

D. Safety Factor for Infants and Children

1. *In general*. FFDCA section 408 provides that EPA shall apply an additional tenfold margin of safety for infants and children in the case of threshold effects to account for prenatal and postnatal toxicity and the completeness of the data base on toxicity and exposure unless EPA determines that a different margin of safety will be safe for infants and children. Margins of safety are incorporated into EPA risk assessments either directly through use of a margin of exposure (MOE) analysis or through using uncertainty (safety) factors in calculating a dose level that poses no appreciable risk to humans.

2. *Prenatal and postnatal sensitivity*. The developmental and reproductive toxicity data did not indicate increased quantitative or qualitative susceptibility of rats or rabbits to *in utero* and/or postnatal exposure.

3. *Conclusion*. There is a complete toxicity data base for fludioxonil and exposure data are complete or are estimated based on data that reasonably accounts for potential exposures. EPA determined that the 10X safety factor to protect infants and children should be reduced to 1X. The FQPA factor was reduced because the toxicology data base is complete; the developmental and reproductive toxicity data did not indicate increased quantitative or qualitative susceptibility of rats or rabbits to *in utero* and/or postnatal exposure; a developmental neurotoxicity study is not required by the Agency because there was no evidence of neurotoxicity in the current toxicity data base; and the exposure assessment approach will not underestimate the potential dietary (food and water) and non-dietary exposures for infants and children resulting from the use of fludioxonil.

E. Aggregate Risks and Determination of Safety

To estimate total aggregate exposure to a pesticide from food, drinking water, and residential uses, the Agency calculates DWLOCs which are used as a point of comparison against the model estimates of a pesticide's concentration in water (EECs). DWLOC values are not regulatory standards for drinking water. DWLOCs are theoretical upper limits on a pesticide's concentration in drinking water in light of total aggregate exposure to a pesticide in food and residential uses. In calculating a DWLOC, the

Agency determines how much of the acceptable exposure (i.e., the PAD) is available for exposure through drinking water [e.g., allowable chronic water exposure (mg/kg/day) = cPAD - (average food + residential exposure)]. This allowable exposure through drinking water is used to calculate a DWLOC.

A DWLOC will vary depending on the toxic endpoint, drinking water consumption, and body weights. Default body weights and consumption values as used by the USEPA Office of Water are used to calculate DWLOCs: 2L/70 kg (adult male), 2L/60 kg (adult female), and 1L/10 kg (child). Default body weights and drinking water consumption values vary on an individual basis. This variation will be taken into account in more refined screening-level and quantitative drinking water exposure assessments. Different populations will have different DWLOCs. Generally, a DWLOC is calculated for each type of risk assessment used: acute, short-term, intermediate-term, chronic, and cancer.

When EECs for surface water and groundwater are less than the calculated DWLOCs, OPP concludes with reasonable certainty that exposures to the pesticide in drinking water (when considered along with other sources of exposure for which OPP has reliable data) would not result in unacceptable levels of aggregate human health risk at this time. Because OPP considers the aggregate risk resulting from multiple exposure pathways associated with a pesticide's uses, levels of comparison in drinking water may vary as those uses change. If new uses are added in the future, OPP will reassess the potential impacts of residues of the pesticide in drinking water as a part of the aggregate risk assessment process.

1. *Acute risk*. Using the exposure assumptions discussed in this unit for acute exposure, the acute dietary exposure from food to fludioxonil will occupy 0.7% of the aPAD for the females 13 years and older. Risk estimated for the general U.S. population subgroups were included in the representative population (females 13–50 years old). In addition, there is potential for acute dietary exposure to fludioxonil in drinking water. After calculating DWLOCs and comparing them to the EECs for surface and ground water, EPA does not expect the aggregate exposure to exceed 100% of the aPAD, as shown in the following Table 3:

TABLE 3.—AGGREGATE RISK ASSESSMENT FOR ACUTE EXPOSURE TO FLUDIOXONIL

Population Subgroup	aPAD (mg/kg)	% aPAD (Food)	Surface Water EEC (ppb)	Ground Water EEC (ppb)	Acute DWLOC (ppb)
Females 13–50 years old	1.0	0.7	132	0.11	30,000

2. *Chronic risk*. Using the exposure assumptions described in this unit for chronic exposure, EPA has concluded that exposure to fludioxonil from food will utilize 6.6% of the cPAD for the U.S. population; 32% of the cPAD for all infants (< 1 year old); 16% of the cPAD for children (1–6 years old); and 4.2% of the cPAD for females (13–50 years old). Based the use pattern, chronic residential exposure to residues of fludioxonil is not expected. In addition, there is potential for chronic dietary exposure to fludioxonil in drinking water. After calculating DWLOCs and comparing them to the EECs for surface and ground water, EPA does not expect the aggregate exposure to exceed 100% of the cPAD, as shown in the following Table 4:

TABLE 4.—AGGREGATE RISK ASSESSMENT FOR CHRONIC (NON-CANCER) EXPOSURE TO FLUDIOXONIL

Population Subgroup	cPAD mg/kg/day	% cPAD (Food)	Surface Water EEC (ppb)	Ground Water EEC (ppb)	Chronic DWLOC (ppb)
U.S. population	0.03	6.6	49	0.11	980
All infants (< 1 year old)	0.03	32	49	0.11	200
Children 1–6 years old	0.03	16	49	0.11	250
Females 13–50 years old	0.03	4.2	49	0.11	860

3. *Short-term risk*. Short-term aggregate exposure takes into account residential exposure plus chronic exposure to food and water (considered to be a background exposure level).

Fludioxonil is currently registered for use that could result in short-term residential exposure and the Agency has determined that it is appropriate to aggregate chronic food and water and short-term exposures for fludioxonil. The label specifies that residential application is restricted to commercial handlers. Therefore, only post-application exposure is expected to result from the residential uses of fludioxonil. For adults, post-application exposures may result from dermal contact with treated turf. For toddlers, dermal and non-dietary oral post-application exposures may result from dermal contact with treated turf as well as hand-to-mouth transfer of residues from turfgrass. However, the Agency did not select short- dermal endpoints for fludioxonil. Therefore, the short-term aggregate risk for fludioxonil considers food, water, and residential non-dietary oral exposures (for toddlers).

Using the exposure assumptions described in this unit for short-term exposures, EPA has concluded that food and residential exposures aggregated result in aggregate MOEs of 5,000 for the U.S. population; 780 for all infants (< 1 year old); 820 for children (1–6 years old); and 7,900 for females (13–50 years old). These aggregate MOEs do not exceed the Agency's level of concern for aggregate exposure to food and residential uses. In addition, short-term DWLOCs were calculated and compared to the EECs for chronic exposure of fludioxonil in ground and surface water.

After calculating DWLOCs and comparing them to the EECs for surface and ground water, EPA does not expect short-term aggregate exposure to exceed the Agency's level of concern, as shown in the following Table 5:

TABLE 5.—AGGREGATE RISK ASSESSMENT FOR SHORT-TERM EXPOSURE TO FLUDIOXONIL

Population Subgroup	Aggregate MOE (Food + Residential)	Aggregate Level of Concern (LOC)	Surface Water EEC (ppb)	Ground Water EEC (ppb)	Short-Term DWLOC (ppb)
U.S. population	5,000	100	49	0.11	3,400
All infants (< 1 year old)	450	100	49	0.11	780
Children (1–6 years old)	570	100	49	0.11	820
Females (13–50 years old)	7,900	100	49	0.11	3,000

4. *Intermediate-term risk*. Intermediate-term aggregate exposure takes into account residential exposure plus chronic exposure to food and water (considered to be a background exposure level). Fludioxonil is currently registered for use(s) that could result in intermediate-term residential exposure and the Agency has determined that it is appropriate to aggregate chronic food and water and intermediate-term exposures for fludioxonil. The label specifies that the residential application of fludioxonil is restricted to commercial handlers. Therefore, only post-application exposure is expected to result from the residential uses of fludioxonil. For adults, post-application exposures may result from dermal contact with treated turf. For toddlers, dermal and non-dietary oral post-application exposures may result from dermal contact with treated turf as well as hand-to-mouth transfer of residues from turfgrass. However, the data did not indicate any adverse effects as a result of intermediate-term dermal exposure. Therefore, the intermediate-term aggregate risk for fludioxonil considers food, water, and residential non-dietary oral exposures (for toddlers).

Using the exposure assumptions described in this unit for intermediate-term exposures, EPA has concluded that food and residential exposures aggregated result in aggregate MOEs of 1,700 for the U.S. population; 190 for all infants (< 1 year old); 270 for (children 1–6 years old); and 2,600 for females (13–50 years old). These aggregate MOEs do not exceed the Agency's level of concern for aggregate exposure to food and residential uses. In addition, intermediate-term DWLOCs were calculated and compared to the EECs for chronic exposure of fludioxonil in ground and surface water. After calculating DWLOCs and comparing them to the EECs for surface and ground water, EPA does not expect intermediate-term aggregate exposure to exceed the Agency's level of concern, as shown in the following Table 6:

TABLE 6.—AGGREGATE RISK ASSESSMENT FOR INTERMEDIATE-TERM EXPOSURE TO FLUDIOXONIL

Population Subgroup	Aggregate MOE (Food + Residential)	Aggregate Level of Concern (LOC)	Surface Water EEC (ppb)	Ground Water EEC (ppb)	Intermediate-Term DWLOC (ppb)
U.S. population	1,700	100	49	0.11	980
All infants (< 1 year old)	190	100	49	0.11	130
Children (1–6 years old)	270	100	49	0.11	180
Females (13–50 years old)	2,600	100	49	0.11	860

5. *Aggregate cancer risk for U.S. population*. The Agency classified fludioxonil as (a ''Group D'') not classifiable as to human carcinogenicity based on the lack of evidence in mice when tested up to the limited dose 7,000 ppm. Additionally, there was no evidence of carcinogenicity in male rats, despite the statistically significant increase in both trend and pairwise of combined hepatocellular tumors in female rats. The pairwise increase for combined tumors was significant at p=0.03, which is not a strong indication of a positive effect. Furthermore, the increase in these tumors was within, but at the high end, of the historical controls.

6. *Determination of safety*. Based on these risk assessments, EPA concludes that there is a reasonable certainty that no harm will result to the general population, and to infants and children from aggregate exposure to fludioxonil residues.

IV. Other Considerations

A. Analytical Enforcement Methodology

Based on the concurrent recovery values obtained from the crop field trial analyses and the previous successful petition method validation (PMV) conducted by EPA's Analytical Chemistry Branch (ACB), EPA concludes that HPLC method AG–597B is adequate to enforce the recommended tolerance levels for residues of fludioxonil *per se* in the bushberry subgroup, the caneberry subgroup, fruit, stone, group, juneberry, lingonberry, pistachio, salal, and watercress.

Adequate enforcement methodology (example—gas chromotography) is available to enforce the tolerance expression. The method may be requested from: Francis Griffith, Analytical Chemistry Branch, Environmental Science Center,

Environmental Protection Agency, 701 Mapes Road, Fort George G. Mead, MD 20755–5350; telephone number (410) 305–2905; e-mail address: griffith.francis@epa.gov.

B. International Residue Limits

There are no Codex, Canadian, or Mexican maximum residue limits (MRLs) for residues of fludioxonil in/on the bushberry subgroup, the caneberry subgroup, fruit, stone, group, juneberry, lingonberry, pistachio, salal, and watercress. Therefore, compatibility issues are not relevant to the proposed tolerances.

V. Conclusion

Therefore, tolerances are established for residues of fludioxonil, (4-(2,2-difluoro-1,3-benzodioxol-4-yl)-1 *H*-pyrrole-3-carbonitrile), in or on bushberry subgroup at 2.0 ppm, caneberry subgroup at 5.0 ppm, fruit, stone, group at 5.0 ppm, juneberry at 2.0 ppm, lingonberry at 2.0 ppm, pistachio at 0.10 ppm, salal at 2.0 ppm, and watercress at 7.0 ppm.

VI. Objections and Hearing Requests

Under section 408(g) of the FFDCA, as amended by the FQPA, any person may file an objection to any aspect of this regulation and may also request a hearing on those objections. The EPA procedural regulations which govern the submission of objections and requests for hearings appear in 40 CFR part 178. Although the procedures in those regulations require some modification to reflect the amendments made to the FFDCA by the FQPA of 1996, EPA will continue to use those procedures, with appropriate adjustments, until the necessary modifications can be made. The new section 408(g) provides essentially the same process for persons to ''object'' to a regulation for an exemption from the requirement of a tolerance issued by EPA under new section 408(d), as was provided in the old FFDCA sections 408 and 409. However, the period for filing objections is now 60 days, rather than 30 days.

A. What Do I Need to Do to File an Objection or Request a Hearing?

You must file your objection or request a hearing on this regulation in accordance with the instructions provided in this unit and in 40 CFR part 178. To ensure proper receipt by EPA, you must identify docket ID number OPP–2002–0158 in the subject line on the first page of your submission. All requests must be in writing, and must be mailed or delivered to the Hearing Clerk on or before October 1, 2002.

1. *Filing the request*. Your objection must specify the specific provisions in the regulation that you object to, and the grounds for the objections (40 CFR 178.25). If a hearing is requested, the objections must include a statement of the factual issues(s) on which a hearing is requested, the requestor's contentions on such issues, and a summary of any evidence relied upon by the objector (40 CFR 178.27). Information submitted in connection with an objection or hearing request may be claimed confidential by marking any part or all of that information as CBI. Information so marked will not be disclosed except in accordance with procedures set forth in 40 CFR part 2. A copy of the information that does not contain CBI must be submitted for inclusion in the public record. Information not marked confidential may be disclosed publicly by EPA without prior notice.

Mail your written request to: Office of the Hearing Clerk (1900), Environmental Protection Agency, 1200 Pennsylvania Ave., NW., Washington, DC 20460. You may also deliver your request to the Office of the Hearing Clerk in Rm. C400, Waterside Mall, 401 M St., SW., Washington, DC 20460. The Office of the Hearing Clerk is open from 8 a.m. to 4 p.m., Monday through Friday, excluding legal holidays. The telephone number for the Office of the Hearing Clerk is (202) 260–4865.

2. *Tolerance fee payment*. If you file an objection or request a hearing, you must also pay the fee prescribed by 40 CFR 180.33(i) or request a waiver of that fee pursuant to 40 CFR 180.33(m). You must mail the fee to: EPA Headquarters Accounting Operations Branch, Office of Pesticide Programs, P.O. Box 360277M, Pittsburgh, PA 15251. Please identify the fee submission by labeling it ''Tolerance Petition Fees.''

EPA is authorized to waive any fee requirement ''when in the judgement of the Administrator such a waiver or refund is equitable and not contrary to the purpose of this subsection.'' For additional information regarding the waiver of these fees, you may contact James Tompkins by phone at (703) 305–5697, by e-mail at tompkins.jim@epa.gov, or by mailing a request for information to Mr. Tompkins at Registration Division (7505C), Office of Pesticide Programs, Environmental Protection Agency, 1200 Pennsylvania Ave., NW., Washington, DC 20460.

If you would like to request a waiver of the tolerance objection fees, you must mail your request for such a waiver to: James Hollins, Information Resources and Services Division (7502C), Office of Pesticide Programs, Environmental Protection Agency, 1200 Pennsylvania Ave., NW., Washington, DC 20460.

3. *Copies for the Docket*. In addition to filing an objection or hearing request with the Hearing Clerk as described in Unit VI.A., you should also send a copy of your request to the PIRIB for its inclusion in the official record that is described in Unit I.B.2. Mail your copies, identified by docket ID number OPP–2002–0158, to: Public Information and Records Integrity Branch, Information Resources and Services Division (7502C), Office of Pesticide Programs, Environmental Protection Agency, 1200 Pennsylvania Ave., NW., Washington, DC 20460. In person or by courier, bring a copy to the location of the PIRIB described in Unit I.B.2. You may also send an electronic copy of your request via e-mail to: opp-docket@epa.gov. Please use an ASCII file format and avoid the use of special characters and any form of encryption. Copies of electronic objections and hearing requests will also be accepted on disks in WordPerfect 6.1/8.0 or ASCII file format. Do not include any CBI in your electronic copy. You may also submit an electronic copy of your request at many Federal Depository Libraries.

B. When Will the Agency Grant a Request for a Hearing?

A request for a hearing will be granted if the Administrator determines that the material submitted shows the following: There is a genuine and substantial issue of fact; there is a reasonable possibility that available evidence identified by the requestor would, if established resolve one or more of such issues in favor of the requestor, taking into account uncontested claims or facts to the contrary; and resolution of the factual issues(s) in the manner sought by the requestor would be adequate to justify the action requested (40 CFR 178.32).

VII. Regulatory Assessment Requirements

This final rule establishes a tolerance under FFDCA section 408(d) in response to a petition submitted to the Agency. The Office of Management and Budget (OMB) has exempted these types of actions from review under Executive Order 12866, entitled *Regulatory Planning and Review* (58 FR 51735, October 4, 1993). Because this rule has been exempted from review under Executive Order 12866 due to its lack of significance, this rule is not subject to Executive Order 13211, *Actions Concerning Regulations That Significantly Affect Energy Supply, Distribution, or Use* (66 FR 28355, May 22, 2001). This final rule does not

contain any information collections subject to OMB approval under the Paperwork Reduction Act (PRA), 44 U.S.C. 3501 *et seq.*, or impose any enforceable duty or contain any unfunded mandate as described under Title II of the Unfunded Mandates Reform Act of 1995 (UMRA) (Public Law 104–4). Nor does it require any special considerations under Executive Order 12898, entitled *Federal Actions to Address Environmental Justice in Minority Populations and Low-Income Populations* (59 FR 7629, February 16, 1994); or OMB review or any Agency action under Executive Order 13045, entitled *Protection of Children from Environmental Health Risks and Safety Risks* (62 FR 19885, April 23, 1997). This action does not involve any technical standards that would require Agency consideration of voluntary consensus standards pursuant to section 12(d) of the National Technology Transfer and Advancement Act of 1995 (NTTAA), Public Law 104–113, section 12(d) (15 U.S.C. 272 note). Since tolerances and exemptions that are established on the basis of a petition under FFDCA section 408(d), such as the tolerance in this final rule, do not require the issuance of a proposed rule, the requirements of the Regulatory Flexibility Act (RFA) (5 U.S.C. 601 *et seq.*) do not apply. In addition, the Agency has determined that this action will not have a substantial direct effect on States, on the relationship between the national government and the States, or on the distribution of power and responsibilities among the various levels of government, as specified in Executive Order 13132, entitled *Federalism*(64 FR 43255, August 10, 1999). Executive Order 13132 requires EPA to develop an accountable process to ensure ''meaningful and timely input by State and local officials in the development of regulatory policies that have federalism implications.'' ''Policies that have federalism implications'' is defined in the Executive order to include regulations that have ''substantial direct effects on the States, on the relationship between the national government and the States, or on the distribution of power and responsibilities among the various levels of government.'' This final rule directly regulates growers, food processors, food handlers and food retailers, not States. This action does not alter the relationships or distribution of power and responsibilities established by Congress in the preemption provisions of FFDCA section 408(n)(4). For these same reasons, the Agency has determined that this rule does not have any ''tribal implications'' as described in Executive Order 13175, entitled *Consultation and Coordination with Indian Tribal Governments* (65 FR 67249, November 6, 2000). Executive Order 13175, requires EPA to develop an accountable process to ensure ''meaningful and timely input by tribal officials in the development of regulatory policies that have tribal implications.'' ''Policies that have tribal implications'' is defined in the Executive order to include regulations that have ''substantial direct effects on one or more Indian tribes, on the relationship between the Federal Government and the Indian tribes, or on the distribution of power and responsibilities between the Federal Government and Indian tribes.'' This rule will not have substantial direct effects on tribal governments, on the relationship between the Federal Government and Indian tribes, or on the distribution of power and responsibilities between the Federal Government and Indian tribes, as specified in Executive Order 13175. Thus, Executive Order 13175 does not apply to this rule.

VIII. Submission to Congress and the Comptroller General

The Congressional Review Act, 5 U.S.C. 801 *et seq.*, as added by the Small Business Regulatory Enforcement Fairness Act of 1996, generally provides that before a rule may take effect, the agency promulgating the rule must submit a rule report, which includes a copy of the rule, to each House of the Congress and to the Comptroller General of the United States. EPA will submit a report containing this rule and other required information to the U.S. Senate, the U.S. House of Representatives, and the Comptroller General of the United States prior to publication of this final rule in the **Federal Register**. This final rule is not a ''major rule'' as defined by 5 U.S.C. 804(2).

List of Subjects in 40 CFR Part 180

Environmental protection, Administrative practice and procedure, Agricultural commodities, Pesticides and pests, Reporting and recordkeeping requirements.

Dated: July 18, 2002.

Debra Edwards,

Acting Director, Registration Division, Office of Pesticide Programs.

Therefore, 40 CFR part 180 is amended as follows:

PART 180—[AMENDED]

1. The authority citation for part 180 continues to read as follows:

Authority: 21 U.S.C. 321(q), 346(a) and 371.

2. Section 180.516 is amended by alphabetically adding commodities to the table in paragraph (a) to read as follows:

§ 180.516 Fludioxonil; tolerances for residues.

(a) * * *

Commodity	Parts per million
Bushberry subgroup	2.0
Caneberry subgroup	5.0
* * * * *	
Fruit, stone, group	5.0
* * * * *	
Juneberry	2.0
* * * * *	
Lingonberry	2.0
* * * * *	
Pistachio	0.10
* * * * *	
Salal	2.0
* * * * *	
Watercress	7.0

* * * * *

[FR Doc. 02–19442 Filed 8–1–02; 8:45 am]

BILLING CODE 6560–50–S

FEDERAL EMERGENCY MANAGEMENT AGENCY

44 CFR Part 65

Changes in Flood Elevation Determinations

AGENCY: Federal Emergency Management Agency (FEMA).

ACTION: Final rule.

SUMMARY: Modified Base (1-percent-annual-chance) Flood Elevations (BFEs) are finalized for the communities listed below. These modified elevations will be used to calculate flood insurance premium rates for new buildings and their contents.

EFFECTIVE DATES: The effective dates for these modified BFEs are indicated on the following table and revise the Flood Insurance Rate Maps in effect for the listed communities prior to this date.

ADDRESSES: The modified BFEs for each community are available for inspection at the office of the Chief Executive

Officer of each community. The respective addresses are listed in the table below.

FOR FURTHER INFORMATION CONTACT: Matthew B. Miller, P.E., Chief, Hazards Study Branch, Federal Insurance and Mitigation Administration, FEMA, 500 C Street SW., Washington, DC 20472, (202) 646–3461, or (e-mail) *matt.miller@fema.gov.*

SUPPLEMENTARY INFORMATION: FEMA makes the final determinations listed below of the modified BFEs for each community listed. These modified elevations have been published in newspapers of local circulation and ninety (90) days have elapsed since that publication. The Acting Administrator, Federal Insurance and Mitigation Administration has resolved any appeals resulting from this notification.

The modified BFEs are not listed for each community in this notice. However, this rule includes the address of the Chief Executive Officer of the community where the modified BFEs determinations are available for inspection.

The modifications are made pursuant to section 206 of the Flood Disaster Protection Act of 1973, 42 U.S.C. 4105, and are in accordance with the National Flood Insurance Act of 1968, 42 U.S.C. 4001 *et seq.*, and with 44 CFR part 65.

For rating purposes, the currently effective community number is shown and must be used for all new policies and renewals.

The modified BFEs are the basis for the floodplain management measures that the community is required to either adopt or to show evidence of being already in effect in order to qualify or to remain qualified for participation in the National Flood Insurance Program (NFIP).

These modified elevations, together with the floodplain management criteria required by 44 CFR 60.3, are the minimum that are required. They should not be construed to mean that the community must change any existing ordinances that are more stringent in their floodplain management requirements. The community may at any time enact stricter requirements of its own, or pursuant to policies established by other Federal, State, or regional entities.

These modified elevations are used to meet the floodplain management requirements of the NFIP and are also used to calculate the appropriate flood insurance premium rates for new buildings built after these elevations are made final, and for the contents in these buildings.

The changes in BFEs are in accordance with 44 CFR 65.4.

National Environmental Policy Act

This rule is categorically excluded from the requirements of 44 CFR part 10, Environmental Consideration. No environmental impact assessment has been prepared.

Regulatory Flexibility Act

The Acting Administrator, Federal Insurance and Mitigation Administration certifies that this rule is exempt from the requirements of the Regulatory Flexibility Act because modified BFEs are required by the Flood Disaster Protection Act of 1973, 42 U.S.C. 4105, and are required to maintain community eligibility in the NFIP. No regulatory flexibility analysis has been prepared.

Regulatory Classification

This final rule is not a significant regulatory action under the criteria of Section 3(f) of Executive Order 12866 of September 30, 1993, Regulatory Planning and Review, 58 FR 51735.

Executive Order 12612, Federalism

This rule involves no policies that have federalism implications under Executive Order 12612, Federalism, dated October 26, 1987.

Executive Order 12778, Civil Justice Reform

This rule meets the applicable standards of Section 2(b)(2) of Executive Order 12778.

List of Subjects in 44 CFR Part 65

Flood insurance, Floodplains, Reporting and Recordkeeping requirements.

Accordingly, 44 CFR part 65 is amended to read as follows:

PART 65—[AMENDED]

1. The authority citation for Part 65 continues to read as follows:

Authority: 42 U.S.C. 4001 *et seq.*; Reorganization Plan No. 3 of 1978, 3 CFR, 1978 Comp., p. 329; E.O. 12127, 44 FR 19367, 3 CFR, 1979 Comp., p. 376.

§ 65.4 [Amended]

2. The tables published under the authority of § 65.4 are amended as follows:

State and county	Location and Case No.:	Dates and name of newspaper where notice was published	Chief executive officer of community	Effective date of modification	Community No.
Arizona:					
Maricopa, (Docket No. FEMA-B–7426).	Town of Buckeye, (01–09–453P).	November 1, 2001, November 8, 2001, *Buckeye Valley News*.	The Honorable Dusty Hull, Mayor, Town of Buckeye, 100 North Apache Road, Suite A, Buckeye, Arizona 85326.	Oct. 9, 2001	040039
Maricopa, (Docket No. FEMA–B–7426).	Town of Cave Creek, (02–09–241X0.	December 27, 2001, January 3, 2002, *Arizona Republic*.	The Honorable Vincent Francis, Mayor, Town of Cave Creek, Cave Creek Town Hall, 37622 North Cave Creek Road, Cave Creek, AZ 85331.	Apr. 3, 2002	040129
Maricopa, (Docket No. FEMA–B–7428).	City of El Mirage, (00–09–083P).	January 31, 2002, February 7, 2002, *Arizona Republic*.	The Honorable Jose Delgado, Mayor, City of El Mirage, 14405 North Palm Street, El Mirage, Arizona 85335.	Jan. 4, 2002	040041
Maricopa, (Docket No. FEMA–B–7428).	City of Goodyear, (02–09–257P).	January 24, 2002, January 31, 2002, *Arizona Republic*.	The Honorable Bill Arnold, Mayor, City of Goodyear, 119 North Litchfield Road, Goodyear, Arizona 85338.	Jan. 15, 2002	040046
Maricopa, (Docket No. FEMA–B–7428).	City of Peoria, (01–09–1060P).	March 7, 2002, March 14, 2002, *Arizona Republic*.	The Honorable John Keegan, Mayor, City of Peoria, 8401 West Monroe Street, Peoria, Ariizona 85345.	June 13, 2002	040050

State and county	Location and Case No.:	Dates and name of newspaper where notice was published	Chief executive officer of community	Effective date of modification	Community No.
Maricopa, (Docket No. FEMA–B–7426).	City of Phoenix, (01–09–1003P).	September 21, 2001, September 28, 2001, *Arizona Republic*.	The Honorable Skip Rimsza, Mayor, City of Phoenix, 200 West Washington Street, 11th Floor, Phoenix, Arizona 85003–1611.	Sept. 10, 2001	040051
Maricopa, (Docket No. FEMA–B–7426).	City of Phoenix, (01–09–285P).	November 8, 2001, November 15, 2001, *Arizona Republic*.	The Honorable Skip Rimsza, Mayor, City of Phoenix, 200 West Washington Street, 11th Floor, Phoenix, Arizona 85003–1611.	Oct. 15, 2001	040051
Maricopa, (Docket No. FEMA–B–7428).	Cit of Phoenix, (01–09–526P).	January 10, 2002, January 17, 2002, *Arizona Republic*.	The Honorable Skip Rimsza, Mayor, City of Phoenix, 200 Washington Street, 11th Floor, Phoenix, Arizona 85003–1611.	Dec. 12, 2001	040051
Maricopa, (Docket No. FEMA–B–7428).	City of Scottsdale,)01–09–1199P).	February 28, 2002, March 7, 2002, *Arizona Republic*.	The Honorable Mary Manross, Mayor, City of Scottsdale, 3939 Civic Center Boulevard, Scottsdale, Arizona 85251.	June 5, 2002	045012
Maricopa, (Docket No. FEMA–B–7428).	City of Surprise, (00–09–083P).	January 31, 2002, February 7, 2002, *Arizona Republic*.	The Honorable Joan Shafer, Mayor, City of Surprise, 12425 West Bell Road, Suite D100, Surprise, Arizona 85374.	Jan. 4, 2002	040053
Maricopa, (Docket No. FEMA–B–7428).	Cit of Surprise, (02–09–165P).	March 7, 2002, March 14, 2002, *Arizona Republic*.	The Honorable Joan Shafer, Mayor, City of Surprise, 12425 West Bell Road, Suite D–100, Surprise, Arizona 85374.	Feb. 19, 2002	040053
Maricopa, (Docket No. FEMA–B–7426).	Unincorporated Areas, (01–09–453P).	November 1, 2001, November 8, 2001, *Bucker Valley News*.	The Honorable Janice K. Brewer, Chairperson, Maricopa County Board of Supervisors, 301 West Jefferson Street, 10th Floor, Phoenix, Arizona 85003.	Oct. 9, 2001	040037
Maricopa, (Docket No. FEMA–B–7426).	Unincorporated Areas, (02–09–241X).	December 27, 2001, January 3, 2001, *Arizona Republic*.	The Honorable Jamice Brewer, Chairperson, Maricopa County Board of Supervisor, 301 West Jefferson, 10th Floor, Phoenix, Arizona 85003.	Apr. 3, 2002	040037
Maricopa, (Docket No. FEMA–B–7428).	Unincorporated Areas, (00–09–083P).	January 31, 2002, February 7, 2002, *Arizona Republic*.	The Honorable Janice Brewer, Chairperson, Maricopa County Board of Supervisors, 301 West Jefferson, 10th Floor, Phoenix, Arizona 85003.	Jan. 4, 2002	040037
Maricopa, (Docket No. FEMA–B–7428).	Unincorporated Areas, (01–09–1158P).	March 15, 2002, March 22, 2002, *Arizona Republic*.	The Honorable Janice Brewer, Chairperson, Maricopa County Board of Supervisors, 301 West Jefferson, 10th Floor, Phoenix, Arizona 85003.	Mar. 5, 2002	040037
Pima, (Docket No. FEMA–B–7428).	City of Tucson, (00–09–051P).	November 8, 2001, November 15, 2001, *Arizona Daily Star*.	The Honorable Robert Walkup, Mayor, City of Tucson, P.O. Box 27210, Tucson, Arizona 85726.	Nov. 2, 2001	040076
California:					
Alameda, (Docket No. FEMA–B–7428).	City of Livermore, (01–09–344P).	February 7, 2002, February 14, 2002, *Tri-Valley Herald*.	The Honorable Cathie Brown, Mayor, City of Livermore, 1052 South Livermore Avenue, Livermore, California 94550.	Dec. 19, 2001	060008
Alameda, (Docket No. FEMA–B–7428).	Unincorporated Areas, (01–09–344P).	January 11, 2002, January 18, 2002, *Inter-City Express*.	The Honorable Scott Haggerty, Chairman, Alameda County Board of Supervisors, 1221 Oak Street, Suite 536, Oakland, California 94612.	Dec. 19, 2001	060001
Kern, (Docket No. FEMA–B–7426).	Unincorporated Areas, (01–09–804P).	October 22, 2001, October 25, 2001, *Bakersfield Californian*.	The Honorable Ken Peterson, Chairman, Kern County Board of Supervisors, 1115 Truxton Avenue, Fifth Floor, Bakersfield, California 93301.	Sept. 27, 2001	060075
Orange, (Docket No. FEMA–B–7426).	City of Huntington Beach, (00–09–825P).	November 8, 2001, November 15, 2001, *Huntington Beach Independent*.	The Honorable Pam Julien Houchen, Mayor, City of Huntington Beach, 2000 Main Street, Huntington Beach, California 92648.	Feb. 13, 2002	065034
Riverside, (Docket No. FEMA–B–7426).	City of Norco, (02–09–195X).	October 25, 2001, November 1, 2001, *Press Enterprise*.	The Honorable Hal H. Clark, Mayor, City of Norco, 3036 Sierra Avenue, Norco, California 92860.	Jan. 30, 2002	060256
Riverside, (Docket No. FEMA–B–7426).	Unincorporated Areas, (02–09–195X).	October 25, 2001, November 1, 2001, *Press Enterprise*.	The Honorable Jim Venable, Chairperson, Riverside County Board of Supervisors, 4080 Lemon Street, 14th Floor, Riverside, California 92501.	Jan. 30, 2002	060245

State and county	Location and Case No.:	Dates and name of newspaper where notice was published	Chief executive officer of community	Effective date of modification	Community No.
Riverside, (Docket No. FEMA–B–7428).	Unincorporated Areas, (02–09–069P).	December 21, 2001, December 28, 2001, *Press–Enterprise*.	The Honorable Jim Venable, Chairman, Riverside County Board of Supervisors, 4080 Lemon Street, 14th Floor, Riverside, California 92501.	Nov. 27, 2001	060245
San Diego, (Docket No. FEMA–B–7426).	City of Carlsbad, (01–09–204P).	November 1, 2001, November 8, 2001 *North County Times*.	The Honorable Claude A. Lewis, Mayor, City of Carlsbad, 1200 Carlsbad Village Drive, Carlsbad, California 92008.	Oct. 25, 2001	060285
San Diego, (Docket No. FEMA–B–7426).	City of Escondido, (01–09–835P).	January 3, 2002, January 10, 2002, *North County Times*.	The Honorable Lori Pfeiler, Mayor, City of Escondido, 201 North Broadway, Escondido, California 92025.	Apr. 10, 2002	060290
San Diego, (Docket No. FEMA–B–7428).	City of Escondido, (01–09–8498X).	February 8, 2002, February 15, 2002, *North County Times*.	The Honorable Lori Pfeiler, Mayor, City of Escondido, 201 North Broadway, Escondido, California 92025.	Feb. 19, 2002	060290
San Diego, (Docket No. FEMA–B–7428).	City of San Diego, (02–09–498X).	February 8, 2002, February 15, 2002 *San Diego Daily Transcript*.	The Honorable Dick Murphy, Mayor, City of San Diego, 202 C Street, 11th Floor, San Diego, California 92101.	Feb. 19, 2002	060295
San Diego, (Docket No. FEMA–B–7426).	City of Vista, (01–09–568P).	November 28, 2001, December 5, 2001, *North County Times*.	The Honorable Gloria E. McClellan, Mayor, City of Vista, P.O. Box 1988, Vista, California 92085.	Nov. 7, 2001	060297
Santa Clara, (Docket No. FEMA–B–7428).	City of Santa Clara, (01–09–1106P).	January 24, 2002, January 31, 2002, *San Jose Mercury News*.	The Honorable Judy Nadler, Mayor, City of Santa Clara, 1500 Warburton Avenue Santa Clara, California 95050.	Jan. 4, 2002	060350
Shasta, (Docket No. FEMA–B–7426).	City of Redding, (01–09–682P).	December 5, 2001, December 12, 2001, *Redding Record Searchlight*.	The Honorable Dave McGeorge, Mayor, City of Redding, 777 Cypress Avenue, Redding, California 96001.	May 12, 2002	060360
Solano, (Docket No. FEMA–B–7428).	City of Vacaville, (01–09–935P).	March 21, 2002, March 28, 2002, *The Reporter*.	The Honorable David Fleming, Mayor, City of Vacaville, City Hall, 650 Merchant Street, Vacaville, California 95688.	Feb. 21, 2002	060373
Ventura, (Docket No. FEMA–B–7428).	City of Fillmore, (01–09–709P).	January 31, 2002, February 7, 2002, *Fillmore Gazette*.	The Honorable Donald Gunderson, Mayor, City of Fillmore, Fillmore City Hall, Central Park Plaza, 250 Central Avenue, Fillmore, California 93015–1907.	May 8, 2002	060415
Ventura, (Docket No. FEMA–B–7426).	City of Simi Valley, (01–09–981P).	December 12, 2001, December 19, 2001, *Ventura County Star*.	The Honorable William Davis, Mayor, City of Simi Valley, 2929 Tapo Canyon Road, Simi Valley, California 93063–2199.	Nov. 26, 2001	060421
Ventura, (Docket No. FEMA–B–7428).	Unincorporated Areas, (01–09–709P).	January 31, 2002, February 7, 2002, *Fillmore Gazette*.	The Honorable Frank Schillo, Chairman, Ventura County Board of Supervisors, 800 South Victoria Avenue, Ventura, California 93009.	May 8, 2002, ...	060413
Colorado:					
Adams, (Docket No. FEMA–B–7426).	City of Aurora, (00–08–342P).	November 1, 2001, November 8, 2001, *Aurora Sentinel*.	The Honorable Paul E. Adams Tauer, Mayor, City of Aurora, 1470 South Havana Street, Eighth Floor, Aurora, Colorado 80012–4090.	Jan. 23, 2002	080002
Adams, (Docket No. FEMA–B–7428).	Unincorporated Areas, (00–08–342P).	October 6, 2001, October 24, 2001, October 27, 2001, *Brighton Standard—Blade*.	The Honorable Marty Flaum, Chairman, Adams County Board of Commissioners, 450 South Fourth Avenue, Brighton, Colorado 80601.	Jan. 23, 2002	080001
Adams, (Docket No. FEMA–B–7428).	Unincorporated Areas, (01–08–416P).	January 23, 2002, January 30, 2002, *Brighton Standard—Blade*.	The Honorable Ted Strickland, Chairman, Adams County Board of Commissioners, 450 South Fourth Avenue, Brighton, Colorado 80601.	Apr. 9, 2002	080001
Adams and Boulder, (Docket No. FEMA–B–7428).	City of Broomfield, (01–08–416P).	January 2, 2002, January 9, 2002, *Boulder Daily Camera*.	The Honorable William Berens, Mayor, City of Broomfield, One Descombes Drive, Broomfield, Colorado 80020.	Apr. 9, 2002	085073
Arapahoe, (Docket No. FEMA–B–7426).	City of Cherry Hills Village, (01–08–262P).	October 18, 2001, October 25, 2001, *The Villager*.	The Honorable Joan Ducan, Mayor, City of Cherry Hills Village, 2450 East Quincy Avenue, Cherry Hills Village, Colorado 80110.	Jan. 23, 2002	080013

State and county	Location and Case No.:	Dates and name of newspaper where notice was published	Chief executive officer of community	Effective date of modification	Community No.
Boulder, (Docket No. FEMA–B–7426).	City of Broomfield, (01–08–339P).	October 31, 2001, November 7, 2001, *Boulder Daily Camera*.	The Honorable William Berens, Mayor, City of Broomfield, One DesCombers Drive, Broomfield, Colorado 80020.	Feb. 5, 2002	085073
El Paso, (Docket No. FEMA–B–7428).	Unicorporated Areas, (01–08–226P).	February 6, 2002, February 13, 2002, *El Paso County News*.	Mr. Ed Jones, Chairman, El Paso County Board of Commissioners, 27 East Vermijo Avenue, Third Floor, Colorado Springs, Colorado 80903–2208.	May 4, 2002	080059
Gilpin, (Docket No. FEMA–B–7428).	City of Black Hawk, (01–08–251P).	March 15, 2002, March 22, 2002, *Weekly Register Call*.	The Honorable Kathryn Eccker, Mayor, City of Black Hawk, P.O. Box 17, Black Hawk, Colorado 80422.	June 20, 2002	080076
Larimer, (Docket No. FEMA–B–7426).	City of Fort Collins, (01–08–045P).	December 27, 2001, January 3, 2002, *Fort Collins Coloradoan*.	The Honorable Ray Martinez, Mayor, City of Fort Collins, P.O. Box 580, Fort Collins, Colorado 80522–0580.	Nov. 29, 2001	080102
Larimer, (Docket No. FEMA–B–7428).	City of Fort Collins, (02–08–045P).	March 21, 2002, March 28, 2002, *Fort Collins Coloradoan*.	The Honorable Ray Martinez, Mayor, City of Fort Collins, P.O. Box 580, Fort Collins, Colorado 80522–0580.	Mar. 6, 2002	080102
Larimer, (Docket No. FEMA–B–7428).	Unicorporated Areas, (01–08–404P).	January 3, 2002, January 10, 2002, *Fort Collins Coloradoan*.	The Honorable Kathay Rennels, Chairperson, Larimer County Board of Commissioners, P.O. Box 1190, Fort Collins, Colorado 80522–1190.	Apr. 10, 2002	080101
Hawaii:					
Hawaii, (Docket No. FEMA–B–7428).	Hawaii County, (01–09–1038P).	January 17, 2002, January 24, 2002, *Hawaii Tribune Herald*.	The Honorable Harry Kim, Mayor, Hawaii County, 25 Aupuni Street, Hilo, Hawaii 96720.	Dec. 27, 2001	155166
Nevada:					
Clark, (Docket No. FEMA–B–7426).	City of North Las Vegas, (01–09–514P).	November 21, 2001, November 28, 2001, *Las Vegas Review-Journal*.	The Honorable Michael L. Montandon, Mayor, City of North Las Vegas, 2200 Civic Center Drive, North Las Vegas, Nevada 89030.	Oct. 31, 2001	320007
Elko, (Docket No. FEMA–B–7428).	City of Elko, (01–09–621P).	January 31, 2002, February 7, 2002, *Elko Daily Free Press*.	The Honorable Mike Franzoia, Mayor, City of Elko, 1751 College Avenue, Elko, Nevada 89801.	May 8, 2002	320010
Independent City, (Docket No. FEMA–B–7428).	City of Carson City, (01–09–066P).	December 21, 2001, December 28, 2001, *Nevada Appeal*.	The Honorable Ray Masayko, Mayor, City of Carson City, 201 North Carson Street, Suite 2, Carson City, Nevada 89701.	Nov. 29, 2001	320001
Washoe, (Docket No. FEMA–B–7428).	City of Reno, (01–09–689P).	January 10, 2002, January 17, 2002, *Reno Gazette-Journal*.	The Honorable Jeff Griffin, Mayor, City of Reno, P.O. Box 1900, Reno, Nevada 89505–1900.	Dec. 14, 2001	320020
Washoe, (Docket No. FEMA–B–7426).	Unincorporated Areas, (01–09–307P).	December 21, 2001, December 28, 2001, *Reno Gazette-Journal*.	The Honorable Ted Short, Chairman, Washoe County Board of Commissioners, P.O. Box 11130, Reno, Nevada 89520.	Nov. 26, 2001	320019
Oklahoma:					
Oklahoma, (Docket No. FEMA–B–7428).	City of Edmond, (02–06–210P).	March 7, 2002, March 14, 2002, *Edmond Evening Sun*.	The Honorable Sandra Naifeh, Mayor, City of Edmond, P.O. Box 2970, Edmond, Oklahoma 73083–2970.	June 12, 2002	400252
Oregon:					
Coos, (Docket No. FEMA–B–7428).	City of Bandon, (00–10–392P).	January 2, 2002, January 9, 2002, *Western World*.	The Honorable Brian M. Vick, Mayor, City of Bandon, City Hall, P.O. Box 433, Bandon, Oregon 97411.	Dec. 10, 2001	410043
South Dakota:					
Pennington, (Docket No. FEMA–B–7428).	Town of New Underwood, (02–08–085P).	January 10, 2002, January 17, 2002, *Rapid City Journal*.	The Honorable Benita White, Mayor, Town of New Underwood, P.O. Box 278, New Underwood, South Dakota 57761.	Dec. 14, 2001	460092
Texas:					
Collin, (Docket No. FEMA–B–7426).	City of Plano, (01–06–1043P).	November 8, 2001, November 15, 2001, *Plano Star Courier*.	The Honorable Jeran Akers, Mayor, City of Plano, P.O. Box 860358, Plano, Texas 75086–0358.	Oct. 17, 2001	480140

State and county	Location and Case No.:	Dates and name of newspaper where notice was published	Chief executive officer of community	Effective date of modification	Community No.
Collin, (Docket No. FEMA–B–7428).	City of Plano, (01–06–1678P).	March 15, 2002, March 22, 2002, *Plano Star Courier*.	The Honorable Jeran Akers, Mayor, City of Plano, P.O. Box 860358, Plano, Texas 75086–0358.	Mar. 5, 2002	480140
Dallas, (Docket No. FEMA–B–7426).	City of Dallas (01–06–1381P).	December 27, 2001, January 3, 2002, *Commercial Recorder*.	The Honorable Ron Kirk, Mayor, City of Dallas, City Hall, 1500 Marilla Street, Dallas, Texas 75201.	Dec. 6, 2001	480171
Dallas, (Docket No. FEMA–B–7426).	City of Sachse, (01–06–309P).	November 7, 2001, November 14, 2001, *Dallas Morning News*.	The Honorable Hugh Cairns, Mayor, City of Sachse City Hall, 5560 Highway 78, Sachse, Texas 75048.	Oct. 12, 2001	480186
Dallas, (Docket No. FEMA–B–7426).	Unincorporated Areas, (01–06–309P).	November 7, 2001, November 14, 2001, *Dallas Morning News*.	The Honorable Lee F. Jackson, Dallas County Judge, Administration Building, 411 Elm Street, Second Floor, Dallas, Texas 75202.	Oct. 12, 2001	480165
Virginia:					
Prince William, (Docket No. FEMA–B–7428).	City of Manassas, (01–03–207P).	March 14, 2002, March 21, 2002, *Manassas Journal Messenger*.	The Honorable Marvin L. Gillum, Mayor, City of Manassas, 9027 Center Street, Room 101, Manassas, Virginia 20110.	June 21, 2002	510122
Prince William, (Docket No. FEMA–B–7428).	Unincorporated Areas, (01–03–207P).	March 14, 2002, March 21, 2002, *Manassas Journal Messenger*.	The Honorable Sean Connaughton, Chairman, Prince William County Board of Supervisors, One County Complex Court, Prince William, Virginia 22192.	June 21, 2002	510119
Washington:					
Cowlitz, (Docket No. FEMA–B–7426).	Unincorporated Areas, (01–10–401P).	November 8, 2001, November 15, 2001, *Daily News*.	The Honorable Jeff M. Rasmussen, Chairman, Cowlitz County, Board of Commissioners, 207 Fourth Avenue North, Kelso, Washington 98626.	Feb. 13, 2002	530032
Mason, (Docket No. FEMA–B–7428).	Skokomish Indian Tribe, (01–10–496P).	February 28, 2002, March 7, 2002, *Shelton Mason County Journal*.	The Honorable Denny Hurtado, Chairman, Skokomish Tribal Council, North 80 Tribal Center Road, Shelton, Washington 98584.	Feb. 7, 2002	530326
Whatcom, (Docket No. FEMA–B–7426).	Unincorporated Areas, (01–10–534P).	November 29, 2001, December 6, 2001, *Bellingham Herald*.	The Honorable Pete Kremen, County Executive, Whatcom County, 311 Grand Avenue, Suite 108, Bellingham, Washington 98225.	November 13, 2001.	530198

Dated: July 23, 2002.

(Catalog of Federal Domestic Assistance No. 83.100, ''Flood Insurance.'')

Robert F. Shea,

Acting Administrator, Federal Insurance and Mitigation Administration.

[FR Doc. 02–19576 Filed 8–1–02; 8:45 am]

BILLING CODE 6718–04–P

DEPARTMENT OF COMMERCE

National Oceanic and Atmospheric Administration

50 CFR Part 622

[I.D. 072302B]

Fisheries of the Caribbean, Gulf of Mexico, and South Atlantic; Reef Fish Fishery of the Gulf of Mexico; Reopening of the Commercial Red Snapper Component

AGENCY: National Marine Fisheries Service (NMFS), National Oceanic and Atmospheric Administration (NOAA), Commerce.

ACTION: Announcement of a reopening of a fishery.

SUMMARY: NMFS announces that the closed commercial fishery for red snapper in the exclusive economic zone (EEZ) of the Gulf of Mexico will reopen. Reopening of the fishery is necessary because the 2002 spring quota for red snapper has not been reached.

DATES: The commercial fishery for red snapper will reopen at noon, local time, August 1, 2002, and will close at noon, local time, August 7, 2002. The fishery will remain closed until noon, local time, October 1, 2002.

FOR FURTHER INFORMATION CONTACT: Phil Steele, telephone 727–570–5305, fax 727–570–5583, e-mail Phil.Steele@noaa.gov.

SUPPLEMENTARY INFORMATION: The reef fish fishery of the Gulf of Mexico is managed under the Fishery Management Plan for the Reef Fish Resources of the Gulf of Mexico (FMP). The FMP was prepared by the Gulf of Mexico Fishery Management Council and is implemented under the authority of the Magnuson-Stevens Fishery Conservation and Management Act by regulations at 50 CFR part 622. Those regulations set the commercial quota for red snapper in the Gulf of Mexico at 4.65 million lb (2.11 million kg) for the current fishing year, January 1 through December 31, 2002. The red snapper commercial fishing season is split into two time periods, the first commencing at noon on February 1 with two-thirds of the annual quota (3.10 million lb (1.41 million kg)) available, and the second commencing at noon on October 1 with the remainder of the annual quota available. During the commercial season, the red snapper commercial fishery opens at noon on the first of each month and closes at noon on the 10th of each month, until the applicable commercial quotas are reached. The spring season was originally scheduled

to be closed at noon, local time, July 7, 2002, when NMFS projected the spring quota would be reached. However, inclement weather during the July 1–7, 2002, opening (abbreviated opening) and the 4th of July holiday limited fishing activities for red snapper in some areas of the Gulf and, therefore, the spring quota was not reached.

Under 50 CFR 622.43(a), NMFS is required to close the commercial fishery for a species or species group when the quota for that species or species group is reached, or is projected to be reached, by filing a notification to that effect in the **Federal Register**. Based on current statistics, NMFS has determined that the available commercial spring quota of 3.10 million lb (1.41 million kg) for red snapper will be reached when the fishery closes at noon, local time, August 7, 2002. Accordingly, the commercial fishery in the EEZ in the Gulf of Mexico for red snapper will remain closed until noon, local time, October 1, 2002. The operator of a vessel with a valid reef fish permit having red snapper aboard must have landed and bartered, traded, or sold such red snapper prior to noon, local time, August 7, 2002.

During the closure, the bag and possession limits specified in 50 CFR 622.39(b) apply to all harvest or possession of red snapper in or from the EEZ in the Gulf of Mexico, and the sale or purchase of red snapper taken from the EEZ is prohibited. In addition, the bag and possession limits for red snapper apply on board a vessel for which a commercial permit for Gulf reef fish has been issued, without regard to where such red snapper were harvested. However, the bag and possession limits for red snapper apply only when the recreational quota for red snapper has not been reached and the bag and possession limit has not been reduced to zero. The prohibition on sale or purchase does not apply to sale or purchase of red snapper that were harvested, landed ashore, and sold prior to noon, local time, August 7, 2002, and were held in cold storage by a dealer or processor.

Classification

This action is taken under 50 CFR 622.43(a) and is exempt from review under Executive Order 12866.

Dated: July 30, 2002.

John H. Dunnigan,

Director, Office of Sustainable Fisheries, National Marine Fisheries Service.

[FR Doc. 02–19542 Filed 7–30–02; 3:20 pm]

BILLING CODE 3510–22–S

DEPARTMENT OF COMMERCE

National Oceanic and Atmospheric Administration

50 CFR Part 648

[Docket No. 010710173–2184–05; I.D. 032102A]

RIN 0648–AN70

Fisheries of the Northeastern United States; Fishery Management Plan for the Summer Flounder, Scup, and Black Sea Bass Fisheries; Recreational Measures for the 2002 Fisheries

AGENCY: National Marine Fisheries Service (NMFS), National Oceanic and Atmospheric Administration (NOAA), Commerce.

ACTION: Final rule.

SUMMARY: NMFS issues this final rule to implement recreational measures for the 2002 summer flounder, scup, and black sea bass fisheries. The implementing regulations for these fisheries require NMFS to publish recreational measures for the upcoming fishing year and to provide an opportunity for public comment. The intent of these measures is to prevent overfishing of the summer flounder, scup, and black sea bass resources.

DATES: Effective August 2, 2002.

ADDRESSES: Copies of supporting documents used by the Summer Flounder, Scup, and Black Sea Bass Monitoring Committees, the Regulatory Impact Review (RIR), the Final Regulatory Flexibility Analysis (FRFA) contained within the RIR, and the Environmental Assessment (EA) are available from the Northeast Regional Office at the following address: National Marine Fisheries Service, One Blackburn Drive, Gloucester, MA 01930–2298. The EA/RIR/FRFA is also accessible via the Internet at *http://www.nero.nmfs.gov/ro/doc/nr.htm*.

FOR FURTHER INFORMATION CONTACT: Richard A. Pearson, Fishery Policy Analyst, (978) 281–9279, fax (978) 281–9135, e-mail rick.a.pearson@noaa.gov.

SUPPLEMENTARY INFORMATION:

Background

The Fishery Management Plan for the Summer Flounder, Scup, and Black Sea Bass Fisheries (FMP) and its implementing regulations (50 CFR part 648, subparts G, H, and I) describe the process for specifying annual recreational measures. Final specifications for the 2002 summer flounder, scup, and black sea bass fisheries were published at 66 FR 66348, December 26, 2001. These specifications included a coastwide recreational harvest limit of 9.72 million lb (4.40 million kg) for summer flounder, 2.71 million lb (1.23 million kg) for scup, and 3.43 million lb (1.55 million kg) for black sea bass. A proposed rule to implement annual Federal recreational measures for the 2002 summer flounder, scup, and black sea bass fisheries was published at 67 FR 36139, on May 23, 2002, and contained management measures (i.e., minimum fish size, possession limit, and season) intended to keep annual recreational harvest from exceeding the specified harvest limits. For scup, one of the two alternatives that was being considered in the proposed rule is being implemented through this final rule (i.e., NMFS Scup Alternative 1). In the proposed rule, the proposed regulatory text for NMFS Scup Alternative 2 was published. The more stringent alternative was published in order to focus public comment on potential impacts of the two alternatives. However, no comments were received. Because Scup Alternative 1 has lower potential revenue losses associated with it, NMFS has selected Scup Alternative 1 for implementation in the final rule to minimize adverse economic impacts on small entities, yet still prevent the recreational harvest limit from being exceeded. Therefore, the regulatory text for the scup measures differ from those contained in the proposed rule. The recreational measures for black sea bass contained in this final rule are unchanged from those published in the proposed rule. Table 1 contains the coastwide Federal measures for scup and black sea bass that are being implemented. For summer flounder, this final rule implements conservation equivalency, as the process was described in the proposed rule. The management measures will vary according to the state of landing (see Table 2). A complete discussion of the development of the recreational measures appeared in the preamble of the proposed rule and is not repeated here.

TABLE 1—2002 RECREATIONAL MEASURES

Species	Minimum Size (total length)	Possession Limit	Open Season
Summer Flounder	Varies according to state of landing		
Scup	10 inches (25.4 cm)	20 fish	Jan. 1 through Feb. 28 and July 1 through Oct. 2
Black Sea Bass	11.5 inches (29.21 cm)	25 fish	Jan.1 through Dec. 31

TABLE 2—2002 STATE RECREATIONAL MANAGEMENT MEASURES FOR SUMMER FLOUNDER

State	Minimum Size (inches)	Minimum size (cm)	Possession Limit	Open Seasons
MA	16.5	41.9	7 fish	Year-Round
RI	18	45.7	5 fish	May 25 through Sep. 20
CT	17	43.2	6 fish	Year-Round
NY	17	43.2	7 fish	May 2 through Oct. 31
NJ	16.5	41.9	8 fish	May 18 through Sep. 24
DE	17.5	44.4	4 fish	May 16 through Dec. 31
MD	17	43.2	8 fish	Jan 1 through July 25&Aug. 12 through Dec. 31
VA	17.5	44.4	8 fish	Mar. 29 through July 23&Aug. 8 through Dec. 31
NC	15.5	39.4	8 fish	July 4 through Nov. 19

Comments and Responses

One co-signed letter was received from four environmental organizations regarding the proposed recreational measures for summer flounder, scup, and black sea bass. The letter contained two comments. Both comments received prior to the close of the comment period that were relevant to the proposed measures were considered in development of this final rule.

Comment 1: The commenters requested that NMFS explain how the recreational scup measures would ensure that overfishing of scup does not occur in 2002, considering that the states, through the Atlantic States Marine Fisheries Commission (ASMFC) Addendum VII, are implementing a different suite of management measures in state waters.

Response: The FMP was originally developed as a joint management plan between ASMFC and the Council. However, ASMFC chose to implement different measures to manage the scup recreational fishery than the Council did, through the adoption of ASMFC Addendum VII. NMFS does not, and cannot, regulate state vessel activity in state waters, except under a very narrow set of circumstances under section 306 of the Magnuson-Stevens Fishery Conservation and Management Act (Magnuson-Stevens Act) that do not exist in this situation. Therefore, NMFS is implementing one of the scup alternatives that was analyzed by the Council, and determined to result in landings that do not exceed the scup recreational harvest limit. By implementing measures in conjunction with the states (closed season, minimum fish size and possession limit) designed to reduce recreational landings by 57.4 percent, NMFS is doing all that can be done under the statute, short of closing the recreational scup fishery in the EEZ. A closure of the EEZ to recreational fishing would have virtually no effect, since 92 percent of the recreational harvest comes from state waters. The negative impact of the closure would fall mainly on the party and charter boat sector of the fleet, which may be viewed as unfair, given the minimal effect of such a closure. Further, the cost of enforcing such a closure would, on at least a qualitative basis, exceed whatever benefit would be derived from the closure.

Both the Council and ASMFC sought to achieve an equivalent scup recreational harvest limit (2.71 million lb (1.23 million kg)). However, the Council used a coastwide approach while ASMFC adopted state-specific measures. For instance ASMFC allowed Delaware, Maryland, Virginia and North Carolina to retain their existing management measures due to low historical scup landings. States from Massachusetts through New York were required to implement state-specific measures based upon the effectiveness of their 2001 regulations relative to landings from 1998 —2000. In the case of New Jersey, which has very limited recreational landings data, ASMFC approved measures which were determined to most likely achieve the required landings reduction.

As a result, the 2002 coastwide Federal scup recreational regulations will differ from the state-specific scup recreational measures. NMFS believes that the combination of ASMFC's measures in state waters and NMFS' coastwide Federal measures are consistent with the FMP, given that both the state and Federal measures were developed to achieve the same recreational harvest limit of 2.71 million lb (1.23 million kg).

Comment 2: The commenters requested that NMFS explain how using conservation equivalency to manage the summer flounder recreational fishery, whereby Federal measures are waived in lieu of state measures, will ensure that overfishing of the resource does not occur in compliance with the requirements of the Magnuson-Stevens Act, its implementing regulations, and the FMP.

Response: The summer flounder measures being implemented through this final rule were selected because they meet the conservation equivalency guidelines and are consistent with the goals and objectives of the FMP and the Magnuson-Stevens Act. The ASMFC Summer Flounder Technical Committee and Management Board have evaluated each state's proposal to determine whether they are consistent with the achievement of the overall summer flounder recreational harvest limit. NMFS has received a determination from ASMFC verifying that each state's proposal is consistent with the state-specific requirements established by the Management Board. The requirement to implement conservation equivalency for the recreational summer flounder fishery have been met. Adopting measures that achieve the required reduction in landings from the 2001

level and that are tailored to address the differences in the fishery in each state, thereby ensuring state support in enforcing these measures, is a reasonable approach to meeting the mandates of the Magnuson-Stevens Act to prevent overfishing.

Changes From the Proposed Rule

Section 648.107 was revised to better reflect the procedural requirements for implementing conservation equivalency for the recreational summer flounder fishery. The change clarifies that the Regional Administrator shall determine that the state recreational management measures are the conservation equivalent of the Federal coastwide measures based upon a recommendation from the ASMFC Summer Flounder Board.

Sections 648.122, 648.124, and 648.125 were revised to incorporate NMFS' selection of Scup Alternative 1 for implementation through this final rule, rather than Scup Alternative 2. This selection was made in consideration of the economic analyses presented in the Initial Regulatory Flexibility Analysis (IRFA) which indicated that less severe economic impacts on small entities were associated with Scup Alternative 1. NMFS did not receive any public comments regarding the economic impacts of the proposed measures contained in the IRFA.

Classification

This final rule has been determined to be not significant for purposes of Executive Order 12866.

This action establishes recreational management measures for the 2002 summer flounder, scup, and black sea bass fisheries. Immediate action to impose more stringent size and possession limits in the scup and black sea bass fisheries must be taken to slow the recreational harvest of these species and enhance the probability that the harvest limits for these species will not be exceeded. For summer flounder, immediate action is necessary to achieve consistency between state and Federal measures. This is a benefit to the states as their vessels can fish under their rules without compromising conservation of the resource. For all of the species, it is important to implement these measures as soon as possible to prevent overfishing. Failure to implement these provisions immediately could result in landings in excess of the recreational harvest limits and prevent NMFS from carrying out its mandate to prevent overfishing of these resources. It would, therefore, be impracticable and contrary to the public interest to delay implementation of these provisions. The Assistant Administrator for Fisheries, NOAA, finds good cause under 5 U.S.C. 553(d)(3) to waive the 30–day delay in effectiveness of the 2002 summer flounder, scup, and black sea bass recreational measures.

The Council and NMFS prepared a Final Regulatory Flexibility Analysis (FRFA) for this action. A copy of this analysis is available from the Regional Administrator (see **ADDRESSES**). The preamble to the proposed rule contained a detailed summary of the methodology and analyses contained in the IRFA and that discussion is not repeated in its entirety here. A summary of the FRFA follows.

A description of the reasons why action by the agency is being taken and the objectives of this final rule are explained in the preambles to the proposed rule and this final rule.

Public Comments

One letter was received on the recreational measures contained in the proposed rule. The letter did not reference the IRFA or the economic impacts on small entities.

Number of Small Entities

The measures established by this action could affect any recreational angler who fishes for summer flounder, scup or black sea bass in Federal waters. However, the summary of impacts focused upon the 738 party/charter vessels that held Federal party/charter permits for the summer flounder, scup, and/or black sea bass fisheries in 2000 (the most recent year for which complete permit data are available) because these vessels can be specifically identified in the Federal vessel permit database, and would be impacted by the regulations regardless of whether they fish in state or Federal waters. Although other recreational fishers are likely to be impacted, they are not considered small entities, nor is a Federal permit required to participate in these fisheries. Of the 738 vessels possessing a Federal party/charter permit for these fisheries, only 393 reported actively participating in these fisheries in 2000.

Minimization of Significant Economic Impacts on Small Entities

The FRFA contains an analysis of the measures being implemented and the other alternatives that were considered. The measures being implemented in this final rule consist of the Council's preferred alternative for summer flounder and black sea bass, and the Council's non-preferred alternative for scup (NMFS Scup Alternative 1).

The category of small entities likely to be affected by this action are party/charter vessels harvesting summer flounder, scup, and/or black sea bass. This action could affect any party/charter vessel holding a Federal permit for summer flounder, scup, and/or black sea bass, regardless of whether it is fishing in Federal or in state waters. The measures implemented through this final rule could affect 738 vessels with a Federal charter/party permit for summer flounder, scup and/or black sea bass. However, only 393 of these vessels actively reported participating in the recreational summer flounder, scup, and/or black sea bass fisheries in 2000.

The FRFA analysis assessed each of the management alternatives and their impacts upon revenues of federally permitted party/charter vessels. Projected Marine Recreational Fisheries Statistics Survey (MRFSS) data indicate that 1.778 million trips were taken by anglers aboard party/charter vessels in 2001 in the Northeast Region. The methodology used to assess the economic impacts of the management measures upon party/charter vessels was described in detail in the IRFA summary contained in the proposed rule and is not repeated here.

The final 2002 summer flounder recreational measures are expected to limit the coastwide catch to 9.72 million lb (4.40 million kg) and reduce landings by at least 27 percent, compared to 2001, by deferring to state management measures as the process for state conservation equivalency was specified through Framework Adjustment 2 to the FMP (66 FR 36208). Comparatively, the economic impact of conservation equivalency among states will likely be proportional to the level of landings reductions that are required of each state. Based upon the number of fish landed in 1998 and projected to have been landed in 2001, the percent reduction in landings required by the states for 2002 (relative to 2001) are: Rhode Island - 5 percent; New Jersey - 16.7 percent; Delaware - 3.5 percent; Maryland - 5.3 percent; Virginia - 43.8 percent; and North Carolina - 28.4 percent. Massachusetts, Connecticut and New York do not require any reductions in recreational summer flounder landings if their current regulations are maintained. If conservation equivalency is effective at achieving the recreational harvest limit, then it is likely to be the only alternative that minimizes economic impacts on small entities, to the extent practicable, yet still achieves the biological objectives of the FMP. This is because each state may adopt measures that are most appropriate for that state to

achieve its conservation objectives, rather than being required to adopt Federal coastwide measures.

The precautionary default provision that was included in the conservation equivalency proposal was not analyzed as a separate provision because it was assumed that, if conservation equivalency were approved in the final rule, the states would use the opportunity to tailor less restrictive measures designed specifically to their state fisheries. Precautionary default measures are defined as measures that would achieve at least the overall required reduction in landings for each state. The Precautionary Default Alternative consists of an 18–inch (45.72–cm) total length (TL) minimum fish size, a possession limit of one fish per person, and no closed season. The precautionary default measures would reduce state specific landings by 41 percent (Delaware) to 88.2 percent (North Carolina). As specified by Framework 2 to the FMP, specific states that fail to implement conservation equivalent measures would be required to implement the precautionary default measures. For 2002, none of the states are required to implement the precautionary default measures.

Under the coastwide summer flounder alternative (17–inch (43.2–cm) TL minimum fish size, eight-fish possession limit, and a year-round open season), less than 1 percent of trips aboard party/charter vessels would be affected, assuming that angler effort and catch rates in 2002 are similar to 2001. The average potential revenue loss per vessel under this alternative was estimated to be $1,506 in Delaware, $961 in New Jersey, $808 in Virginia, $186 in Maryland, and $67 in Rhode Island. This coastwide alternative was not selected because the Council recommended conservation equivalency instead, because that alternative would be more likely to minimize economic impacts on small entities.

The status quo summer flounder alternative would have maintained a 15.5–inch (39.4–cm) TL minimum fish size, a three-fish possession limit, and an open season from May 25 to September 4. Assuming that angler effort in 2002 is similar to 2001, and that catch rates remain constant, the status quo alternative would not affect any additional recreational fishing trips for summer flounder in 2002. This alternative was not selected because it did not achieve the recreational harvest limit established for 2002.

The final 2002 recreational scup measures (10–inch (25.4–cm) TL minimum fish size, 20–fish possession limit, and January 1 through February 28 and July 1 through October 2 open seasons) will affect approximately 4 percent of the total angler trips taken aboard party/charter vessels in 2002, assuming catch rates and angler effort in 2002 are similar to those in 2001. Under this alternative, the average maximum revenue loss per vessel was estimated to be $13,425 in New York, $8,267 in Delaware, $3,114 in Massachusetts, $2,525 in Connecticut, $2,083 in Rhode Island, and $899 in New Jersey. Scup Alternative 1 was selected for implementation because it would result in landings that do not exceed the recreational harvest limit and because the revenue losses associated with this alternative are less than those associated with Scup Alternative 2.

As emphasized in the IRFA summary in the proposed rule, the methodology used in the economic analysis likely overestimates the potential revenue impacts associated with each alternative. The analysis assumes that any affected fishing trip (i.e., not in compliance with the management measures) in 2001 would not occur in 2002. It is quite likely that some anglers would continue to take party/charter vessel trips, even if the restrictions limit their landings.

The measures proposed under Scup Alternative 2 (a 9–inch (22.9–cm) TL minimum fish size, a 20–fish possession limit, and open seasons from January 1 through February 28 and September 2 through October 31) would affect approximately 7.3 percent of the total angler trips taken aboard party/charter boats in 2001, assuming catch rates and angler effort in 2002 are similar to those in 2001. The average maximum gross revenue loss per party/charter vessel associated with NMFS Scup Alternative 2 was estimated to be $15,509 in New York, $11,733 in Delaware, $10,495 in New Jersey, $6,704 in Massachusetts, $3,591 in Rhode Island, and $2,754 in Connecticut. This alternative was not selected because of the higher potential revenue losses associated with it.

The economic impacts associated with the Council's Preferred Scup Alternative and with Scup Alternative 3 were summarized in the proposed rule and are not repeated here. The Council's Preferred Scup Alternative was not implemented because it would not achieve the landings reduction necessary to attain the 2002 scup recreational harvest limit and would not be in compliance with the FMP. Scup Alternative 3 was not selected for implementation because it specified a very short fishing season and, consequently, had very high associated potential revenue losses.

The status quo alternative for scup would have maintained a 50–fish possession limit, a 9–inch (22.9–cm) TL minimum fish size, and an open season from August 15 through October 31. Assuming that angler effort in 2002 is similar to 2001 and that catch rates remain constant, the status quo alternative would not affect any additional recreational fishing trips for scup in 2001. This alternative was not selected because it does not meet the goals and objectives of the FMP.

For black sea bass, about 1.8 percent of the trips aboard party/charter vessels in 2001 would be affected by the final 2002 recreational measures, assuming that catch rates and angler effort in 2002 are similar to 2001. Under this alternative, the average maximum revenue loss per vessel is estimated to be $26,122 in Maryland, $11,091 in Delaware, $3,075 in New Jersey, $1,818 in Virginia, $1,378 in North Carolina, and $54 in Rhode Island. This alternative was selected because it minimizes economic impacts and attains the goals and objectives of the FMP.

Under black sea bass alternative 1 (an 11–inch (27.9–cm) TL minimum fish size, a 25–fish possession limit, and an open season from May 19 through November 30) about 5.5 percent of the trips aboard party/charter vessels would have been affected. Under this alternative, the average maximum revenue loss per vessel was estimated to be $27,264 in Maryland, $12,868 in Delaware, $4,119 in New Jersey, $2,023 in Virginia, $1,578 in Rhode Island, $1,542 in North Carolina, and $36 in Massachusetts. This alternative was not selected because it has a greater negative economic impact than the selected alternative and does not minimize economic impacts on small entities.

Under black sea bass Alternative 2 (an 11–inch (27.94–cm) TL minimum fish size, a 15–fish possession limit, and an open season from January 1 through February 28 and May 1 through December 26) about 5.5 percent of the trips aboard party/charter vessels would have been affected. The average maximum revenue loss per vessel associated with this alternative was estimated to be $36,772 in Maryland, $23,462 in New Jersey, $10,582 in Delaware, $1,869 in Virginia, $1,378 in North Carolina, $183 in Rhode Island, $59 in New York, and $5 in Massachusetts. Black sea bass Alternative 2 was not selected because it would have a greater negative economic impact than the selected alternative and would not minimize the economic impacts on small entities.

The status quo alternative for black sea bass would have maintained an 11–inch (27.9–cm) TL minimum fish size, a 25–fish possession limit, and open seasons from January 1 through February 28 and May 10 through December 31. Assuming that angler effort in 2002 is similar to 2001 and that catch rates remain constant, the status quo alternative would not affect any additional recreational fishing trips for black sea bass in 2002. This alternative was not selected because it would not meet the goals and objectives of the FMP.

It is important to re-emphasize that the revenue losses discussed above represent the maximum potential gross revenue losses per vessel. These losses were calculated by assuming that all of the angler trips constrained by the proposed measures would no longer occur. Because anglers would continue to have the ability to engage in catch-and-release fishing for summer flounder, scup, and black sea bass and because of the numerous alternative target species available to anglers, the reduction in effort and associated expenditures should be substantially lower than indicated in this summary. The lack of a demand model limits the ability to empirically estimate how sensitive the affected anglers might be to the proposed regulations. Because the measures affect the number and size of the fish that may be kept and do not prohibit anglers from engaging in catch-and-release fishing or fishing up to the possession limit, demand and revenues for party/charter vessels are expected to remain relatively stable in 2002.

In summary, the summer flounder recreational measures minimize economic impacts on small entities by allowing states to develop and implement measures that are most appropriate for their fisheries, yet are consistent with the biological objectives of the FMP. The scup recreational alternative that is being implemented through this final rule has been determined to have the lowest potential revenue losses associated with it, as compared to all of the alternatives that achieve the biological objectives of the FMP. Similarly, the black sea bass recreational alternative that is being implemented through this final rule has been determined to have the lowest potential revenue losses associated with it, compared to all of the alternatives that achieve the biological objectives of the FMP. This action does not contain any additional collection-of-information, reporting, recordkeeping, or other compliance requirements.

This action does not duplicate, overlap, or conflict with any other Federal rules.

The RIR/FRFA is available from the Council (see **ADDRESSES**).

List of Subjects in 50 CFR Part 648

Fisheries, Fishing, Reporting and recordkeeping requirements.

Dated: July 29, 2002.

William T. Hogarth,

Assistant Administrator for Fisheries, National Marine Fisheries Service.

For the reasons set out in the preamble, 50 CFR part 648 is amended as follows:

PART 648—FISHERIES OF THE NORTHEASTERN UNITED STATES

1. The authority citation for part 648 continues to read as follows:

Authority: 16 U.S.C. 1801 *et seq.*

2. In § 648.100, a heading is added to paragraph (d) introductory text to read as follows:

§ 648.100 Catch quotas and other restrictions.

* * * * *

(d) *Commercial measures.** * *

3. Section 648.102 is revised to read as follows:

§ 648.102 Time restrictions.

Unless otherwise specified pursuant to § 648.107, vessels that are not eligible for a moratorium permit under § 648.4(a)(3) and fishermen subject to the possession limit may fish for summer flounder from January 1 through December 31. This time period may be adjusted pursuant to the procedures in § 648.100.

4. In § 648.103, paragraph (b) is revised to read as follows:

§ 648.103 Minimum fish sizes.

* * * * *

(b) Unless otherwise specified pursuant to § 648.107, the minimum size for summer flounder is 17 inches (43.2 cm) TL for all vessels that do not qualify for a moratorium permit, and charter boats holding a moratorium permit if fishing with more than three crew members, or party boats holding a moratorium permit if fishing with passengers for hire or carrying more than five crew members.

* * * * *

5. In § 648.105, the first sentence of paragraph (a) is revised to read as follows:

§ 648.105 Possession restrictions.

(a) Unless otherwise specified pursuant to § 648.107, no person shall possess more than eight summer flounder in, or harvested from, the EEZ unless that person is the owner or operator of a fishing vessel issued a summer flounder moratorium permit, or is issued a summer flounder dealer permit.***

* * * * *

6. Section 648.107 is revised to read as follows:

§ 648.107 Conservation equivalent measures for the summer flounder fishery.

(a) The Regional Administrator has determined that the recreational fishing measures proposed to be implemented by the states of Maine through North Carolina for 2002 are the conservation equivalent of the season, minimum size and possession limit prescribed in §§648.102, 648.103 and 648.105(a), respectively. This determination is based on a recommendation from the Summer Flounder Board of the Atlantic States Marine Fisheries Commission.

(1) Federally permitted vessels subject to the recreational fishing measures of this part, and other recreational fishing vessels harvesting summer flounder in or from the EEZ and subject to the recreational fishing measures of this part, landing summer flounder in a state whose fishery management measures are determined by the Regional Administrator to be conservation equivalent shall not be subject to the more restrictive Federal measures, pursuant to the provisions of § 648.4(b). Those vessels shall be subject to the recreational fishing measures implemented by the state in which they land.

(2) [Reserved]

(b) Federally permitted vessels subject to the recreational fishing measures of this part, and other recreational fishing vessels registered in states and subject to the recreational fishing measures of this part, whose fishery management measures are not determined by the Regional Administrator to be the conservation equivalent of the season, minimum size and possession limit prescribed in §§ 648.102, 648.103(b) and 648.105(a), respectively, due to the lack of, or the reversal of, a conservation equivalent recommendation from the Summer Flounder Board of the Atlantic States Marine Fisheries Commission shall be subject to the following precautionary default measures: Season through January 1 through December 31; minimum size - 18 inches (45.7 cm); and possession limit - one fish.

7. In § 648.122, paragraph (g) is revised to read as follows:

§ 648.122 Time and area restrictions.

* * * * *

(g) *Time restrictions*. Vessels that are not eligible for a moratorium permit under § 648.4(a)(6), and fishermen subject to the possession limit, may not possess scup, except from January 1 through February 28 and from July 1 through October 2. This time period may be adjusted pursuant to the procedures in § 648.120.

8. In § 648.124, paragraph (b) is revised to read as follows:

§ 648.124 Minimum fish sizes.

* * * * *

(b) The minimum size for scup is 10 inches (25.4 cm) TL for all vessels that do not have a moratorium permit, or for party and charter vessels that are issued a moratorium permit but are fishing with passengers for hire, or carrying more than three crew members if a charter boat, or more than five crew members if a party boat.

* * * * *

9. In § 648.125, the first sentence of paragraph (a) is revised to read as follows:

§ 648.125 Possession limit.

(a) No person shall possess more than 20 scup in, or harvested from the EEZ unless that person is the owner or operator of a fishing vessel issued a scup moratorium permit, or is issued a scup dealer permit.***

* * * * *

10. Section 648.142 is revised to read as follows:

§ 648.142 Time restrictions.

Vessels that are not eligible for a moratorium permit under § 648.4(a)(7), and fishermen subject to the possession limit, may not possess black sea bass, except from January 1 through December 31. This time period may be adjusted pursuant to the procedures in § 648.140.

11. In § 648.143, paragraph (b) is revised to read as follows:

§ 648.143 Minimum sizes.

* * * * *

(b) The minimum size for black sea bass is 11.5 inches (29.2 cm) TL for all vessels that do not qualify for a moratorium permit, and party boats holding a moratorium permit if fishing with passengers for hire or carrying more than five crew members, or charter boats holding a moratorium permit if fishing with more than three crew members. The minimum size may be adjusted for recreational vessels pursuant to the procedures in § 648.140.

* * * * *

[FR Doc. 02–19582 Filed 8–1–02; 8:45 am]

BILLING CODE 3510–22–P

Proposed Rules

Federal Register
Vol. 67, No. 149
Friday, August 2, 2002

This section of the FEDERAL REGISTER contains notices to the public of the proposed issuance of rules and regulations. The purpose of these notices is to give interested persons an opportunity to participate in the rule making prior to the adoption of the final rules.

NUCLEAR REGULATORY COMMISSION

10 CFR Parts 50 and 52

RIN 3150–AG76

Combustible Gas Control in Containment

AGENCY: U.S. Nuclear Regulatory Commission.

ACTION: Proposed rule.

SUMMARY: The U.S. Nuclear Regulatory Commission (NRC) proposes to amend its regulations for combustible gas control in power reactors applicable to current licensees and to set and consolidate combustible gas control regulations for future applicants and licensees. The proposed rule eliminates the requirements for hydrogen recombiners and hydrogen purge systems and relaxes the requirements for hydrogen and oxygen monitoring equipment to make them commensurate with their risk significance. This action stems from the Commission's ongoing effort to risk-inform its regulations, and is intended to reduce the regulatory burden on present and future power reactor licensees.

In addition to the rulemaking and its associated analyses, the NRC is also proposing a draft regulatory guide, a draft standard review plan revision, and a Consolidated Line Item Improvement Process (CLIIP) for draft technical specifications changes to implement the proposed rule. The NRC is requesting comments on these documents as well as the proposed rulemaking.

DATES: Submit comments by October 16, 2002. Comments received after this date will be considered if it is practical to do so, but the Commission is able to ensure consideration only for comments received on or before this date.

ADDRESSES: Submit comments to the Secretary, U.S. Nuclear Regulatory Commission, Washington, DC 20555–0001, Attention: Rulemakings and Adjudications Staff.

Deliver comments to: 11555 Rockville Pike, Rockville, Maryland, between 7:30 a.m. and 4:15 p.m. on Federal workdays.

You may also provide comments via the NRC's interactive rulemaking Website at *http://ruleforum.llnl.gov.* This site provides the capability to upload comments as files (any format) if your Web browser supports that function. For information about the interactive rulemaking Website, contact Ms. Carol Gallagher, (301) 415–5905 (e-mail: *CAG@nrc.gov*).

Certain documents related to this rulemaking, including comments received, may be examined at the NRC Public Document Room, 11555 Rockville Pike, Rockville, Maryland. Some of these documents may also be viewed and downloaded electronically via the rulemaking Website.

FOR FURTHER INFORMATION CONTACT: Anthony W. Markley, Office of Nuclear Reactor Regulation, U.S. Nuclear Regulatory Commission, Washington, DC 20555–0001, telephone (301) 415–3165, e-mail *awm@nrc.gov.*

SUPPLEMENTARY INFORMATION:

I. Background
II. Rulemaking Initiation
III. Proposed Action
  A. Retention of Inerting, BWR Mark III and PWR Ice Condenser Hydrogen Control Systems, Mixed Atmosphere Requirements, and Associated Analysis Requirements
  B. Elimination of Design-Basis LOCA Hydrogen Release
  C. Oxygen Monitoring Requirements
  D. Hydrogen Monitoring Requirements
  E. Combustible Gas Control Requirements for Future Applicants
  F. Clarification and Relocation of High Point Vent Requirements From 10 CFR 50.44 to 10 CFR 50.46a
  G. Elimination of Post-Accident Inerting
IV. Section-by-Section Analysis of Substantive Changes
V. Plain Language
VI. Voluntary Consensus Standards
VII. Finding of No Significant Environmental Impact: Environmental Assessment
VIII. Paperwork Reduction Act Statement
IX. Regulatory Analysis
X. Regulatory Flexibility Certification
XI. Backfit Analysis

I. Background

On October 27, 1978 (43 FR 50162), the Commission adopted a new rule, 10 CFR 50.44, specifying the standards for combustible gas control systems. The rule requires the applicant or licensee to show that during the time period following a postulated loss-of-coolant accident (LOCA), but prior to effective operation of the combustible gas control system, either: (1) An uncontrolled hydrogen-oxygen recombination would not take place in the containment, or (2) the plant could withstand the consequences of an uncontrolled hydrogen-oxygen recombination without loss of safety function. If neither of these conditions could be shown, the rule required that the containment be provided with an inerted atmosphere to provide protection against hydrogen burning and explosion. The rule defined a release of hydrogen involving up to 5 percent oxidation of the fuel cladding as the amount of hydrogen to be assumed in determining compliance with the rule's provisions. This design-basis hydrogen release was based on the design-basis LOCA postulated by 10 CFR 50.46 and was multiplied by a factor of five for added conservatism to address possible further degradation of emergency core cooling.

The accident at Three Mile Island, Unit 2 involved oxidation of approximately 45 percent of the fuel cladding [NUREG/CR–6197, dated March 1994] with hydrogen generation well in excess of the amounts required to be considered for design purposes by § 50.44. In the aftermath of the Three Mile Island accident, the Commission reevaluated the adequacy of the regulations related to hydrogen control to provide greater protection in the event of accidents more severe than design-basis LOCAs. The Commission reassessed the vulnerability of various containment designs to hydrogen burning, which resulted in additional hydrogen control requirements adopted as amendments to § 50.44. The 1981 amendment, which added paragraphs (c)(3)(i), (c)(3)(ii), and (c)(3)(iii) to the rule, imposed the following requirements: (1) An inerted atmosphere for boiling water reactor (BWR) Mark I and Mark II containments, (2) installation of recombiners for light water reactors that rely on a purge or repressurization system as a primary means of controlling combustible gases following a LOCA, and (3) installation of high point vents to relieve noncondensible gases from the reactor vessel (46 FR 58484, December 2, 1981).

On January 25, 1985 (50 FR 3498), the Commission published another amendment to § 50.44. This

amendment, which added paragraph (c)(3)(iv), required a hydrogen control system justified by a suitable program of experiment and analysis for BWRs with Mark III containments and pressurized water reactors (PWRs) with ice condenser containments. In addition, plants with these containment designs must have systems and components to establish and maintain safe shutdown and containment integrity. These systems must be able to function in an environment after burning and detonation of hydrogen unless it is shown that these events are unlikely to occur. The control system must handle an amount of hydrogen equivalent to that generated from a metal-water reaction involving 75 percent of the fuel cladding surrounding the active fuel region.

When § 50.44 was amended in 1985, the NRC recognized that an improved understanding of the behavior of accidents involving severe core damage was needed. During the 1980s and 1990s, the Commission sponsored a severe accident research program to improve the understanding of core melt phenomena, combustible gas generation, transport and combustion, and to develop improved models to predict the progression of severe accidents. The results of this research have been incorporated into various studies (*e.g.,* NUREG–1150 and probabilistic risk assessments performed as part of the Individual Plant Examination (IPE) program) to quantify the risk posed by severe accidents for light water reactors.

The result of these studies has been an improved understanding of combustible gas behavior during severe accidents and confirmation that the hydrogen release postulated from a design-basis LOCA was not risk-significant because it would not lead to containment failure, and that the risk associated with hydrogen combustion was from beyond design-basis (*e.g.,* severe accidents) accidents. These studies also confirmed the assessment of vulnerabilities that went into the 1981 and 1985 amendments which required additional hydrogen control measures for some containment designs.

II. Rulemaking Initiation

In a June 8, 1999, Staff Requirements Memorandum (SRM) on SECY–98–300, Options for Risk-informed Revisions to 10 CFR part 50—''Domestic Licensing of Production and Utilization Facilities,'' the Commission approved proceeding with a study of risk-informing the technical requirements of 10 CFR part 50. The NRC staff provided its plan and schedule for the study phase of its work to risk-inform the technical requirements of 10 CFR part 50, in SECY–99–264, ''Proposed Staff Plan for Risk-Informing Technical Requirements in 10 CFR part 50'' dated November 8, 1999. The Commission approved proceeding with the plan for risk-informing the part 50 technical requirements in a February 3, 2000, SRM. Section 50.44 was selected as a test case for piloting the process of risk-informing 10 CFR part 50 in SECY–00–0086, ''Status Report on Risk-Informing the Technical Requirements of 10 CFR part 50 (Option 3).''

Mr. Christie of Performance Technology, Inc. submitted letters, dated October 7 and November 9, 1999, that requested changes to the regulations in § 50.44. He requested that the regulations be amended to: reflect that the hydrogen source term be based on realistic calculations for accidents with a high probability of causing severe reactor core damage; eliminate the requirement to monitor hydrogen concentration; eliminate the requirement to control combustible gas concentration resulting from a postulated-LOCA; retain the requirement to inert Mark I and II containments; retain the requirement for high point vents; require licensees with Mark III and ice condenser containments to have hydrogen control systems capable of meeting a specified performance level; and specify that facilities with other types of containments ''must demonstrate that the reactor containment (based on realistic calculations) can withstand, without any hydrogen control system, a hydrogen burn for accidents with a high probability of causing severe core damage.''

These letters have been treated by the NRC as a petition for rulemaking and assigned the Docket No. PRM–50–68. The NRC published a document requesting comment on the petition in the **Federal Register** on January 12, 2000 (65 FR 1829). The issues associated with § 50.44 raised by the petitioner were discussed in SECY–00–0198, Status Report on Study of Risk-Informed Changes to the Technical Requirements of 10 CFR part 50 (Option 3) and Recommendations on Risk-Informed Changes to 10 CFR 50.44 (Combustible Gas Control). The proposed rule and the petition are consistent in most areas, with the following exceptions proposed by the NRC: a functional requirement for hydrogen monitoring, the capability for ensuring a mixed atmosphere, and the expectation that future plants preclude concentrations of hydrogen below limits that may support detonation. The Commission's basis for including these requirements in the proposed rule is addressed in the subsequent sections of this supplementary information.

The Commission also received a petition for rulemaking filed by the Nuclear Energy Institute. The petition was docketed on April 12, 2000, and has been assigned Docket No. PRM–50–71. The petitioner requests that the NRC amend its regulations to allow nuclear power plant licensees to use zirconium-based cladding materials other than zircaloy or ZIRLO, provided the cladding materials meet the requirements for fuel cladding performance and have received approval by the NRC staff. The petitioner believes the proposed amendment would improve the efficiency of the regulatory process by eliminating the need for individual licensees to obtain exemptions to use advanced cladding materials which have already been approved by the NRC. The proposed rule would remove the restrictive language in 10 CFR 50.44 that precludes the use of zirconium-based cladding materials other than zircaloy or ZIRLO. The change requested by the petitioner is unrelated to the risk-informing of 10 CFR 50.44. The Commission is addressing this petition in this rulemaking for effective use of resources. The NRC published a document requesting comment on the petition in the **Federal Register** on May 30, 2000 (65 FR 34599).

In SECY–00–0198, dated September 14, 2000, the NRC staff proposed a risk-informed voluntary alternative to the current § 50.44. Attachment 2 to that paper, hereafter referred to as the Feasibility Study, used the framework described in Attachment 1 to the paper and risk insights from NUREG–1150 and the IPE programs, to evaluate the requirements in § 50.44. The Feasibility Study found that combustible gas generated from design-basis accidents was not risk-significant for any containment type, given intrinsic design capabilities or installed mitigative features. The Feasibility Study also concluded that combustible gas generated from severe accidents was not risk significant for (1) Mark I and II containments provided that the required inerted atmosphere was maintained, (2) Mark III and ice condenser containments provided that the required igniter systems were maintained and operational, and (3) large, dry and sub-atmospheric containments because the large volumes, high failure pressures, and likelihood of random ignition help prevent the build-up of hydrogen concentrations.

The Feasibility Study did conclude that the existing requirements for

combustible gas mitigative features were risk-significant and must be retained. Additionally, the Feasibility Study also indicated that some mitigative features may need to be enhanced beyond current requirements. This was identified as Generic Issue (GI) 189. The resolution of GI–189 will assess whether improvements to safety can be achieved and the costs and benefits of enhancing combustible gas control requirements for Mark III and ice condenser containment designs. The resolution of GI–189 will proceed independently of this rulemaking.

The staff incorporated Mr. Christie's petition into the effort to risk-inform § 50.44. A comparison of Mr. Christie's petition for rulemaking to the staff's recommended alternative was provided in Attachment 3 to SECY–00–0198. In an SRM dated January 19, 2001, the Commission directed the NRC staff to proceed expeditiously with rulemaking on the risk-informed alternative to § 50.44.

In SECY–01–0162, Staff Plans for Proceeding with the Risk-informed Alternative to the Standards for Combustible Gas Control Systems in Light-water-cooled Power Reactors in 10 CFR 50.44, dated August 23, 2001, the NRC staff recommended a revised approach to the rulemaking effort. This revised approach recognized that risk-informing part 50, Option 3 was based on a realistic reevaluation of the basis of a regulation and the application of realistic risk analyses to determine the need for and relative value of regulations that address a design-basis issue. The result of this process necessitates a fundamental reevaluation or ''rebaselining'' of the existing regulation, rather than the development of a voluntary alternative approach to rulemaking. Lastly, upon its own initiative, the staff incorporated the relevant portions of the NEI petition into this rulemaking. On November 14, 2001, in response to Commission direction in an SRM dated August 2, 2001, the staff published draft rule language on the NRC web site for stakeholder review and comment. In an SRM dated December 31, 2001, the Commission directed the staff to proceed with the revision to the existing § 50.44 regulations.

III. Proposed Action

The Commission proposes to retain existing requirements for ensuring a mixed atmosphere, inerting Mark I and II containments, and hydrogen control systems capable of accommodating an amount of hydrogen generated from a metal-water reaction involving 75 percent of the fuel cladding surrounding the active fuel region in Mark III and ice condenser containments. The Commission proposes to eliminate the design-basis LOCA hydrogen release from § 50.44 and to consolidate the requirements for hydrogen and oxygen monitoring into § 50.44 while relaxing safety classifications and licensee commitments to certain design and qualification criteria. The Commission also proposes to relocate without change the hydrogen control requirements in § 50.34(f) to § 50.44. The Commission proposes to relocate the high point vent requirements from § 50.44 to § 50.46a with a change that eliminates a requirement prohibiting venting the reactor coolant system if it could ''aggravate'' the challenge to containment. The NRC received comments on the draft rule language published on the Web site from seven members of the public which included both petitioners, four utilities, and a law firm that represents the Nuclear Utility Group on Equipment Qualification. The comments were overwhelmingly supportive of the draft proposed rule language. The Commission used stakeholder comments on the draft rule language, information provided in licensee exemption submittals, in the petitions for rulemaking, and in the Boiling Water Reactor Owners Group (BWROG) topical report to inform its deliberations and decisions with respect to specific rule language and positions taken.

The Commission also received feedback on several issues for which comments were specifically requested in the draft rule language. The existing rule provides detailed, prescriptive instructions using American Society of Mechanical Engineers (ASME) references for the performance of boiling water reactor (BWR) Mark III and pressurized water reactor (PWR) ice condenser containments. The staff provided an option for a more performance-based approach for stakeholder consideration, which received positive public comment. Based upon stakeholder input, the proposed rule eliminates the existing references to ASME and prescriptive requirements and the proposed regulatory guide, attached to this paper, includes the ASME approach as one in which the intent of the regulations could be satisfied which simplifies the proposed regulations.

The staff also requested feedback on the utility of post-accident inerting as a means of combustible gas control. To date, no current licensee facility has exercised this alternative to address the control of combustible gas nor has any new reactor design opted for this approach. The major concerns involved with post-accident inerting of containment are expense and the issues associated with its adverse effects and actuation. Stakeholder feedback during public meetings and in the comments received on the draft rule language supported elimination of this option. Based upon stakeholder input, the proposed rule eliminates the post-accident inerting option which also simplifies the proposed regulations.

Substantive changes in rule language that resulted from consideration of public comments are addressed in the following subject sections.

A. Retention of Inerting, BWR Mark III and PWR Ice Condenser Hydrogen Control Systems, Mixed Atmosphere Requirements, and Associated Analysis Requirements

The Commission proposes to retain the existing requirement in § 50.44(c)(3)(i) to inert Marks I and II type containments. Given the relatively small volume and large zirconium inventory, these containments, without inerting, would have a high likelihood of failure from hydrogen combustion due to the potentially large concentration of hydrogen that a severe accident could cause. Retaining the requirement maintains the current level of public protection, as discussed in section 4.3.2 of the Feasibility Study.

The Commission proposes to retain the existing requirements in § 50.44(c)(3) (iv), (v), and (vi) that BWRs with Mark III containments and PWRs with ice condenser containments provide a hydrogen control system justified by a suitable program of experiment and analysis. The amount of hydrogen to be considered is that generated from a metal-water reaction involving 75 percent of the fuel cladding surrounding the active fuel region (excluding the cladding surrounding the plenum volume). The analyses must demonstrate that the structures, systems and component necessary for safe shutdown and maintaining containment integrity must perform their functions during and after exposure to the conditions created by the burning hydrogen. Environmental conditions caused by local detonations of hydrogen must also be included, unless such detonations can be shown unlikely to occur. A beyond design-basis accident generating significant amounts of hydrogen (on the order of Three Mile Island, Unit 2, accident or a metal water reaction involving 75 percent of the fuel cladding surrounding the active fuel region) would pose a severe threat to the integrity of these containment types in the absence of the

installed igniter systems. Section 4.3.3 of the Feasibility Study concluded that hydrogen combustion is not risk-significant, in terms of the framework document's quantitative guidelines, when igniter systems installed to meet § 50.44(c)(3) (iv), (v), and (vi) are available and operable. The Commission proposes to retain these requirements. Previously reviewed and approved licensee analyses to meet the existing regulations constitute compliance with this proposed section. The results of these analyses must continue to be documented in the plant's Updated Final Safety Analysis Report in accordance with § 50.71(e).

The Commission proposes to retain the § 50.44(b)(2) requirement that all containments ensure a mixed atmosphere. A mixed containment atmosphere prevents local accumulation of combustible or detonable gases which could threaten containment integrity or equipment operating in a local compartment. The current regulation ensures that features that promote atmospheric mixing, either active systems and/or containment internal structures that have design features which promote the free circulation of the containment atmosphere, are provided.

B. Elimination of Design-Basis LOCA Hydrogen Release

The proposed rule would remove the existing definition of a design-basis LOCA hydrogen release and eliminate requirements for hydrogen control systems to mitigate such a release. The installation of recombiners and/or vent and purge systems required by § 50.44(b)(3) was intended to address the limited quantity and rate of hydrogen generation that was postulated from a design-basis LOCA. The Commission finds that this hydrogen release is not risk-significant. This finding is based on the Feasibility Study which found that the design-basis LOCA hydrogen release did not contribute to the conditional probability of a large release up to approximately 24 hours after the onset of core damage. The requirements for combustible gas control that were developed after the Three Mile Island Unit 2 accident were intended to minimize potential additional challenges to containment due to long term residual or radiolytically generated hydrogen. The Commission found that containment loadings associated with long term hydrogen concentrations are no worse than those considered in the first 24 hours and are, therefore, not risk-significant. The Commission believes that accumulation of combustible gases beyond 24 hours can be managed by licensee implementation of the severe accident management guidelines (SAMGs) or other ad hoc actions because of the long period of time available to take such action. Therefore, the Commission proposes to eliminate the hydrogen release associated with a design-basis LOCA from § 50.44 and the associated requirements that necessitated the need for the hydrogen recombiners and the backup hydrogen vent and purge systems.

In plants with Mark I and II containments, the containment atmosphere is required to be maintained with a low concentration of oxygen, rendering it inert to combustion. Mark I and II containments can be challenged beyond 24 hours by the long-term generation of oxygen through radiolysis. The regulatory analysis for this proposed rulemaking found the cost of maintaining the recombiners exceeded the benefit of retaining them to prevent containment failure sequences that progress to the very late time frame. The Commission believes that this conclusion would also be true for the backup hydrogen purge system even though the cost of the hydrogen purge system would be much lower because the system is also needed to inert the containment.

The Commission continues to view severe accident management guidelines as an important part of the severe accident closure process. Severe accident management guidelines are part of a voluntary industry initiative to address accidents beyond the design basis and emergency operating instructions. In November 1994, the U.S. nuclear industry committed to implement severe accident management at their plants by December 31, 1998, using the guidance contained in NEI 91–04, Revision 1, ''Severe Accident Issue Closure Guidelines.'' Generic severe accident management guidelines developed by each nuclear steam system supplier owners group includes either purging and venting or venting the containment to address combustible gas control. On the basis of the industry-wide commitment, the Commission is not proposing to require such capabilities, but continues to view purging and/or controlled venting of all containment types to be an important combustible gas control strategy that should be considered in a plant's severe accident management guidelines.

C. Oxygen Monitoring Requirements

The Commission proposes to amend § 50.44 to codify the existing regulatory practice of monitoring oxygen in containments that use an inerted atmosphere for combustible gas control. Standard technical specifications and licensee technical specifications currently require oxygen monitoring to verify the inerted condition in containment. Combustible gases produced by beyond design-basis accidents involving both fuel-cladding oxidation and core-concrete interaction would be risk-significant for plants with Mark I and II containments if not for the inerted containment atmosphere. If an inerted containment was to become de-inerted during a beyond design-basis accident, then other severe accident management strategies, such as purging and venting, would need to be considered. The oxygen monitoring is needed to implement these severe accident management strategies, in plant emergency operating procedures and is also used as an input in emergency response decision making.

The Commission proposes reclassifying oxygen monitors as not safety-related components. Currently, as recommended by the Commission's Regulatory Guide (RG) 1.97, oxygen monitors are classified as Category 1. Category 1 is defined as applying to instrumentation designed for monitoring variables that most directly indicate the accomplishment of a safety function for design-basis events. By eliminating the design-basis LOCA hydrogen release, the oxygen monitors are no longer required to mitigate design-basis accidents. The Commission finds that Category 2, defined in RG 1.97, as applying to instrumentation designated for indicating system operating status, to be the more appropriate categorization for the oxygen monitors, because the monitors will still continue to be required to verify the status of the inerted containment. Further, the staff concludes that sufficient reliability of oxygen monitoring, commensurate with its risk-significance, will be achieved by the guidance associated with the Category 2 classification. Because of the various regulatory means, such as orders, that were used to implement post-TMI requirements, this proposed relaxation may require a license amendment. Licensees would also need to update their final safety analysis report to reflect the new classification and RG 1.97 categorization of the monitors in accordance with 10 CFR 50.71(e).

D. Hydrogen Monitoring Requirements

The Commission proposes to maintain the existing requirement in § 50.44(b)(1) for monitoring hydrogen in the containment atmosphere for all plant designs. Section 50.44(b)(1),

standard technical specifications and licensee technical specifications currently contain requirements for monitoring hydrogen, including operability and surveillance requirements for the monitoring systems. Licensees have also made commitments to design and qualification criteria for hydrogen monitors in NUREG–0737, Item II.F.1, Attachment 6 and in RG 1.97. The hydrogen monitors are required to assess the degree of core damage during a beyond design-basis accident and confirm that random or deliberate ignition has taken place. Hydrogen monitors are also used, in conjunction with oxygen monitors in inerted containments, to guide response to emergency operating procedures. Hydrogen monitors are also used in emergency operating procedures of BWR Mark III facilities. If an explosive mixture that could threaten containment integrity exists, then other severe accident management strategies, such as purging and/or venting, would need to be considered. The hydrogen monitors are needed to implement these severe accident management strategies.

The Commission proposes to reclassify the hydrogen monitors as not safety-related components. With the proposed elimination of the design-basis LOCA hydrogen release (see Item B. earlier), the hydrogen monitors are no longer required to mitigate design-basis accidents and, therefore, the hydrogen monitors do not meet the definition of a safety-related component as defined in § 50.2. This is consistent with the Commission's proposal that oxygen monitors that are used for beyond-design basis accidents need not be safety grade.

Currently, RG 1.97 recommends classifying the hydrogen monitors in Category 1, defined as applying to instrumentation designed for monitoring key variables that most directly indicate the accomplishment of a safety function for design-basis accident events. The hydrogen monitors no longer meet the definition of Category 1 in RG 1.97 and, therefore, the Commission believes that licensees' current commitments are unnecessarily burdensome. The Commission believes that Category 3, as defined in RG 1.97, is an appropriate categorization for the hydrogen monitors because the monitors are required to diagnose the course of beyond design-basis accidents. Category 3 applies to high-quality, off-the-shelf backup and diagnostic instrumentation. As with the revision to oxygen monitoring, this proposed relaxation may require a license amendment. Licensees would also need to update their final safety analysis report to reflect the new classification and RG 1.97 categorization of the monitors in accordance with 10 CFR 50.71(e).

E. Combustible Gas Control Requirements for Future Applicants

The Commission proposes to set forth combustible gas control requirements for all future applicants for or holders of a construction permit or an operating license under part 50, and to all future applicants for design approval, design certification, or a combined license under Part 52. These requirements would consolidate combustible gas requirements for existing and future light water reactors in § 50.44. Section 52.47(a)(ii) requires demonstration of compliance with the technically relevant portions of the Three Mile Island requirements in § 50.34(f). Section 50.34(f)(2)(ix) requires a system for hydrogen control that can safely accommodate hydrogen generated by the equivalent of a 100 percent fuel-clad metal-water reaction. In addition, the regulation requires this system to be capable of precluding uniform concentrations of hydrogen from exceeding 10 percent (by volume), or providing an inerted atmosphere within the containment. The Commission is proposing requirements for future light water reactors that are consistent with the criteria currently contained in § 50.34(f)(2)(ix) to preclude local concentrations of hydrogen collecting in areas where unintended combustion or detonation could cause loss of containment integrity or loss of appropriate mitigating features. These requirements are in keeping with the Commission's expectation that future designs will achieve a higher standard of severe accident performance (50 FR 32138; August 8, 1985). Additional advantages of providing hydrogen control mitigation features (rather than reliance on random ignition of richer mixtures) include the lessening of pressure and temperature loadings on the containment and essential equipment.

F. Clarification and Relocation of High Point Vent Requirements From 10 CFR 50.44 to 10 CFR 50.46a

The Commission proposes to remove the current requirements for high point vents from § 50.44 and to transfer them to a new § 50.46a. The Commission proposes relocating these requirements because high point vents are relevant to emergency core cooling system (ECCS) performance during severe accidents, and § 50.44 does not address ECCS performance. The requirement to install high point vents was imposed by the 1981 amendment to § 50.44. This requirement permitted venting of noncondensible gases which may interfere with the natural circulation pattern in the reactor coolant system. This process is regarded as an important safety feature in accident sequences that credit natural circulation of the reactor coolant system. In other sequences, the pockets of noncondensible gases may interfere with pump operation. The high point vents could be instrumental for terminating a core damage accident if ECCS operation is restored. Under these circumstances, venting noncondensible gases from the vessel allows emergency core cooling flow to reach the damaged reactor core and thus prevents further accident progression.

The Commission proposes to amend the language in current § 50.44(c)(3)(iii) by deleting the statement, ''the use of these vents during and following an accident must not aggravate the challenge to the containment or the course of the accident.'' For certain severe accident sequences, the use of reactor coolant system high point vents is intended to reduce the amount of core damage by providing an opportunity to restore reactor core cooling. While the release of noncondensible and combustible gases from the reactor coolant system will, in the short term, ''aggravate'' the challenge to containment, the use of these vents will positively affect the overall course of the accident. The release of any combustible gases from the reactor coolant system has been considered in the containment design and mitigative features that are required for combustible gas control. Any venting is highly unlikely to affect containment integrity; however, such venting will reduce the likelihood of further core damage. Inasmuch as the overall safety is increased by venting through high point vents, the Commission proposes elimination of this statement in § 50.46a.

G. Elimination of Post-Accident Inerting

The proposed rule would no longer provide an option to use post-accident inerting as a means of combustible gas control. Although post-accident inerting systems were permitted as a possible alternative for mitigating combustible gas concerns after the accident at Three Mile Island, Unit 2, these systems have never been implemented to date. Concerns with a post-accident inerting system include: corrosion (if halon gas is used as the inerting agent), increase in containment pressure with use, limitations on emergency response personnel access, and cost. Sections 50.44(c)(3)(iv)(D) and 50.34(f)(ix)(D)

were promulgated to address these concerns. On November 14, 2001, draft rule language was made available to elicit comment from interested stakeholders. The draft rule language recommended eliminating the option to use post-accident inerting as a means of combustible gas control and asked stakeholders if there was a need to retain these requirements. Stakeholder feedback supported the staff recommendation to eliminate the post-accident inerting option and indicated that licensees do not intend to convert existing plants to use post-accident inerting. Because there is no need for the regulations to support an approach that is unlikely to be used, post-accident inerting requirements are being eliminated.

IV. Section-by-Section Analysis of Substantive Changes

Section 50.44—Combustible Gas Control in Containment

Paragraph (a) [Definitions]. Paragraph (a) adds definitions for two previously undefined terms, ''mixed atmosphere,'' and ''inerted atmosphere.''

Paragraph (b) [Requirements for currently-licensed reactors]. This paragraph would set forth the requirements for control of combustible gas in containment for currently-licensed reactors. All BWRs with Mark I and II type containments will be required to have an inerted containment atmosphere, and all BWR Mark III type containments and PWR s with ice condenser type containments would be required to include a capability for controlling combustible gas generated from a metal water reaction involving 75% of the fuel cladding surrounding the active fuel region (excluding the cladding surrounding the plenum volume) so that there is no loss of containment integrity. Current requirements in § 50.44(c) (i), (iv), (v), and (vi) would be incorporated in to the proposed amended regulation without substantial change. Previously reviewed and installed combustible gas control mitigation features to meet the existing regulations are considered in compliance with this proposed section. Because these proposed requirements address beyond design-basis combustible gas control, it is acceptable for structures, systems, and components provided to meet these requirements to not be safety-related and may be procured as commercial grade items.

Proposed paragraph (b)(1) [Mixed atmosphere]. The requirement for capability ensuring a mixed atmosphere in all containments is consistent with the current requirement in § 50.44(b)(2) and would not require further analysis or modifications by current licensees. The intent of this requirement is to maintain those plant design features (*e.g.,* availability of active mixing systems or open compartments) that promote atmospheric mixing. The requirement could be met with active or passive systems. Active systems could include a fan, a fan cooler or containment spray. Passive capability could be demonstrated by evaluating the containment for susceptibility to local hydrogen concentration. These evaluations have been conducted for currently licensed reactors as part of the IPE program.

Proposed paragraph (b)(3) retains the existing requirements for BWR Mark III and PWR ice condenser facilities that do not use inerting to establish and maintain safe shutdown and containment structural integrity to use structures, systems, and components capable of performing their functions during and after exposure to hydrogen combustion.

Proposed paragraph (b)(4)(i) would codify the existing regulatory practice of monitoring oxygen in containments that use an inerted atmosphere for combustible gas control. The proposed rule would not require further analysis or modifications by current licensees but certain design and qualification criteria would be relaxed. The proposed rule requires that equipment for monitoring oxygen be functional, reliable and capable of continuously measuring the concentration of oxygen in the containment atmosphere following a beyond design-basis accident. Equipment for monitoring oxygen is expected to perform in the environment anticipated in the severe accident management guidance. The oxygen monitors are expected to be of high-quality and may be procured as commercial grade items. Existing oxygen monitoring commitments for currently licensed plants are sufficient to meet the intent of this rule.

Proposed paragraph (b)(4)(ii) would retain the requirement in § 50.44(b)(1) for measuring the hydrogen concentration in the containment. The proposed rule would not require further analysis or modifications by current licensees but certain design and qualification criteria would be relaxed. The proposed rule requires that equipment for monitoring hydrogen be functional, reliable and capable of continuously measuring the concentration of hydrogen in the containment atmosphere following a beyond design-basis accident. Equipment for monitoring hydrogen is expected to perform in the environment anticipated in the severe accident management guidance. The hydrogen monitors may be procured as commercial grade items. Existing hydrogen monitoring commitments for currently licensed plants are sufficient to meet the intent of this rule.

Paragraph (c) [Requirements for future applicants and licensees]. Proposed paragraph (c) would promulgate requirements for combustible gas in containment control for all future construction permits or operating licenses under part 50 and to all design approvals, design certifications, combined licenses or manufacturing licenses under part 52. The current requirements in § 50.34(f)(2)(ix) and (f)(3)(v) would be retained. Proposed paragraph (c)(2) would require all containments to have an inerted atmosphere or limit hydrogen concentrations in containment during and following an accident that releases an equivalent amount of hydrogen as would be generated from a 100 percent fuel-clad coolant reaction, uniformly distributed, to less than 10 percent and maintain containment structural integrity and appropriate mitigating features. Structures, systems, and components (SSCs) provided to meet this requirement must be designed to provide reasonable assurance that they will operate in the severe accident environment for which they are intended and over the time span for which they are needed. Equipment survivability expectations under severe accident conditions should consider the circumstances of applicable initiating events (such as station blackout [1] or earthquakes) and the environment (including pressure, temperature, and radiation) in which the equipment is relied upon to function. The required system performance criteria will be based on the results of design-specific reviews which include probabilistic risk-assessment as required by 10 CFR 52.47(a)(v). Because these requirements address beyond design-basis combustible gas control, SSCs provided to meet these requirements need not be subject to the environmental qualification requirements of 10 CFR Section 50.49; quality assurance

[1] The Proposed Section 50.44 does not require the deliberate ignition systems used by BWRs with Mark III type containments and PWRs with ice condenser type containments to be available during station blackout events. The deliberate ignition systems should be available upon the restoration of power. Additional guidance concerning the availability of deliberate ignition systems during station blackout sequences is being developed as part of the staff's review of Generic Safety Issue 189: ''Susceptibility of Ice Condenser and Mark III Containments to Early Failure from Hydrogen Combustion During a Severe Accident.''

requirements of 10 CFR part 50, Appendix B; and redundancy/diversity requirements of 10 CFR part 50, Appendix A. Guidance such as that found in Appendices A and B of RG 1.155, ''Station Blackout,'' is appropriate for equipment used to mitigate the consequences of severe accidents. Proposed paragraph (c) would also promulgate requirements for ensuring a mixed atmosphere and monitoring oxygen and hydrogen in containment, consistent with the requirements for current plants set forth in proposed paragraphs (b)(1), and (b)(4)(i) and (ii).

Section 50.46a—Acceptance Criteria for Reactor Coolant System Venting Systems

Proposed § 50.46a would be a new section which relocates the requirements for high point vents currently contained in § 50.44. The amendment includes a change that eliminates a requirement prohibiting venting the reactor coolant system if it could ''aggravate'' the challenge to containment. Any venting is highly unlikely to affect containment integrity; however, such venting will reduce the likelihood of further core damage. Commission continues to view use of the high point vents to be an important strategy that should be considered in a plant's severe accident management guidelines.

Section 52.47—Contents of Applications

§ 52.47 would be amended to eliminate the reference to subsections within § 50.34(f) for technically relevant requirements for combustible gas control in containment for future design approval, design certification, or license applicants. These applicants would reference § 50.44 for technical requirements for combustible gas control in containment.

V. Plain Language

The Presidential memorandum dated June 1, 1998, entitled ''Plain Language in Government Writing'' directed that the Government's writing be in plain language. This memorandum was published on June 10, 1998 (63 FR 31883). In complying with this directive, editorial changes have been made in these proposed revisions to improve the organization and readability of the existing language of the paragraphs being revised. These types of changes are not discussed further in this document. The NRC requests comments on the proposed rule specifically with respect to the clarity and reflectiveness of the language used. Comments should be sent to the address listed under the **ADDRESSES** caption of the preamble.

VI. Voluntary Consensus Standards

The National Technology Transfer and Advancement Act of 1995, Pub. L. 104–113, requires that Federal agencies use technical standards that are developed or adopted by voluntary consensus standards bodies unless using such a standard is inconsistent with applicable law or is otherwise impractical. In this proposed rule, the NRC proposes to use the following Government-unique standard: 10 CFR 50.44, U.S. Nuclear Regulatory Commission, October 27, 1978 (43 FR 50163), as amended. The NRC is not aware of any voluntary consensus standard that could be used instead of the proposed Government-unique standard. The NRC will consider a voluntary consensus standard if an appropriate standard is identified. If a voluntary standard is identified for consideration, the submittal should explain how the voluntary consensus standard is comparable and why it should be used instead of the proposed Government-unique standard.

VII. Finding of No Significant Environmental Impact: Environmental Assessment

The Commission has determined under the National Environmental Policy Act of 1969, as amended, and the Commission's regulations in Subpart A of 10 CFR Part 51, that this rule, if adopted, would not be a major Federal action significantly affecting the quality of the human environment and, therefore, an environmental impact statement is not required. The basis for this determination reads as follows:

This action endorses existing requirements and establishes regulations that reduce regulatory burdens for current and future licensees and consolidates combustible gas control regulations for future applicants and licensees. This action stems from the Commission's ongoing effort to risk-inform its regulations. The proposed rule would reduce the regulatory burdens on present and future power reactor licensees by eliminating the LOCA design-basis accident as a combustible gas control concern. This change eliminates the requirements for hydrogen recombiners and hydrogen purge systems and relaxes the requirements for hydrogen and oxygen monitoring equipment to make them commensurate with their safety and risk significance.

The proposed action would not significantly increase the probability or consequences of an accident. No changes are being made in the types or quantities of radiological effluents that may be released off site, and there is no significant increase in public radiation exposure since there is no change to facility operations that could create a new or affect a previously analyzed accident or release path. There may be a reduction of occupational radiation exposure since personnel will no longer be required to maintain or operate, if necessary, the hydrogen recombiner systems which are located in or near radiologically controlled areas.

With regard to non-radiological impacts, no changes are being made to non-radiological plant effluents and there are no changes in activities that would adversely affect the environment. Therefore, there are no significant non-radiological impacts associated with the proposed action.

The primary alternative to this action would be the no action alternative. The no action alternative would continue to impose unwarranted regulatory burdens for which there would be little or no safety, risk, or environmental benefit.

The determination of this environmental assessment is that there will be no significant offsite impact to the public from this action. However, the general public should note that the NRC is seeking public participation. Comments on any aspect of the environmental assessment may be submitted to the NRC as indicated under the **ADDRESSES** heading.

The NRC has sent a copy of this proposed rule to every State Liaison Officer and requested their comments on the environmental assessment.

VIII. Paperwork Reduction Act Statement

This proposed rule decreases the burden on new applicants to complete the hydrogen control analysis required to be submitted in a license application, as required by sections 50.34 or 52.47. The public burden reduction for this information collection is estimated to average 720 hours per request. Because the burden for this information collection is insignificant, Office of Management and Budget (OMB) clearance is not required. Existing requirements were approved by the Office of Management and Budget, approval numbers 3150–0011 and 3150–0151.

Public Protection Notification

The NRC may not conduct or sponsor, and a person is not required to respond to, a request for information or an information collection requirement unless the requesting document

displays a currently valid OMB control number.

IX. Regulatory Analysis

The Commission has prepared a draft regulatory analysis on this proposed regulation. The analysis examines the costs and benefits of Commission alternatives for updating the existing rule to accommodate technological advances while addressing regulatory relaxation issues. From an overall safety and value impact perspective, the analysis recommends removing hydrogen recombiner requirements and relaxing hydrogen and oxygen monitoring requirements.

The Commission requests public comment on the draft regulatory analysis. The regulatory analysis may be viewed and downloaded, and comments may be submitted at the NRC Rulemaking Web site. Single copies of the analysis are also available from Anthony Markley, Office of Nuclear Reactor Regulation, (301) 415–3165, e-mail *awm@nrc.gov.* Comments on the draft analysis may be submitted to the NRC as indicated under the **ADDRESSES** heading.

X. Regulatory Flexibility Certification

As required by the Regulatory Flexibility Act, as amended, 5 U.S.C. 605(b), the Commission certifies that this proposed rule, if adopted, would not have a significant economic impact on a substantial number of small entities. This proposed rule would affect only licensees authorized to operate nuclear power reactors. These licensees do not fall within the scope of the definition of ''small entities'' set forth in the Regulatory Flexibility Act, or the Size Standards established by the Nuclear Regulatory Commission (10 CFR 2.810).

XI. Backfit Analysis

The NRC has determined that the backfit rule does not apply to this proposed rule; therefore, a backfit analysis is not required for this proposed rule because these amendments do not impose more stringent safety requirements on 10 CFR part 50 licensees. For current licensees, the proposed amendments either maintain without substantive change existing requirements or reduce current regulatory requirements. For future applicants and future licensees, the proposed requirements do not involve backfitting as defined in 10 CFR 50.109(a)(1). This is because any changes will have only a prospective effect on future design certification applicants and future applicants for licensees under 10 CFR part 50 and 52. As the Commission has indicated in other rulemakings, sec., *e.g.,* 54 FR 15372, April 18, 1989 (Final Part 52 Rule), the expectations of future applicants are not protected by the Backfit Rule. Therefore, the NRC has not prepared a backfit analysis for this rulemaking.

List of Subjects

10 CFR Part 50

Antitrust, Classified information, Criminal penalties, Fire protection, Intergovernmental relations, Nuclear power plants and reactors, Radiation protection, Reactor siting criteria, Reporting and recordkeeping requirements.

10 CFR Part 52

Administrative practice and procedure, Antitrust, Backfitting, Combined license, Early site permit, Emergency planning, Fees, Inspection, Limited work authorization, Nuclear power plants and reactors, Probabilistic risk assessment, Prototype, Reactor siting criteria, Redress of site, Reporting and recordkeeping requirements, Standard design, Standard design certification.

For the reasons set out in the preamble and under the authority of the Atomic Energy Act of 1954, as amended; the Energy Reorganization Act of 1974, as amended; and 5 U.S.C. 553, the NRC is proposing to adopt the following amendments to 10 CFR Parts 50 and 52.

PART 50—DOMESTIC LICENSING OF PRODUCTION AND UTILIZATION FACILITIES

1. The authority citation for Part 50 continues to read as follows:

Authority: Secs. 102, 103, 104, 105, 161, 182, 183, 186, 189, 68 Stat. 936, 938, 948, 953, 954, 955, 956, as amended, sec. 234, 83 Stat. 444, as amended (42 U.S.C. 2132, 2133, 2134, 2135, 2201, 2232, 2233, 2239, 2282); secs. 201, as amended, 202, 206, 88 Stat. 1242, as amended, 1244, 1246 (42 U.S.C. 5841, 5842, 5846).

Section 50.7 also issued under Pub. L. 95–601, sec. 10, 92 Stat. 2951, as amended by Pub. L. 102–486, sec. 2902, 106 Stat. 3123 (42 U.S.C. 5851). Section 50.10 also issued under secs. 101, 185, 68 Stat. 936, 955, as amended (42 U.S.C. 2131, 2235); sec. 102, Pub. L. 91–190, 83 Stat. 853 (42 U.S.C. 4332). Sections 50.13, 50.54(dd), and 50.103 also issued under sec. 108, 68 Stat. 939, as amended (42 U.S.C. 2138). Sections 50.23, 50.35, 50.55, and 50.56 also issued under sec. 185, 68 Stat. 955 (42 U.S.C. 2235). Sections 50.33a, 50.55a and Appendix Q also issued under sec. 102, Pub. L. 91–190, 83 Stat. 853 (42 U.S.C. 4332). Sections 50.34 and 50.54 also issued under Pub. L. 97–415, 96 Stat. 2073 (42 U.S.C. 2239). Section 50.78 also issued under sec. 122, 68 Stat. 939 (42 U.S.C. 2152). Sections 50.80–50.81 also issued under sec. 184, 68 Stat. 954, as amended (42 U.S.C. 2234). Appendix F also issued under sec. 187, 68 Stat. 955 (42 U.S.C. 2237).

2. In § 50.34, paragraph (a)(4) is revised, paragraph (g) is redesignated as paragraph (h), and a new paragraph (g) is added to read as follows:

§ 50.34 Contents of applications; technical information.

(a) * * *

(4) A preliminary analysis and evaluation of the design and performance of structures, systems, and components of the facility with the objective of assessing the risk to public health and safety resulting from operation of the facility and including determination of the margins of safety during normal operations and transient conditions anticipated during the life of the facility, and the adequacy of structures, systems, and components provided for the prevention of accidents and the mitigation of the consequences of accidents. Analysis and evaluation of ECCS cooling performance and the need for high point vents following postulated loss-of-coolant accidents must be performed in accordance with the requirements of § 50.46 and § 50.46a of this part for facilities for which construction permits may be issued after December 28, 1974.

* * * * *

(g) Combustible gas control. All applicants for a construction permit or operating license under part 50 of this chapter, and all applicants for design approval, design certification, or license under part 52 of this chapter, whose application was submitted after [EFFECTIVE DATE OF RULE], shall include the descriptions of the equipment, systems, and analyses required by § 50.44 as a part of their application.

* * * * *

3. Section 50.44 is revised to read as follows:

§ 50.44 Combustible gas control in containment.

(a) Definitions. (1) Inerted atmosphere means a containment atmosphere with less than 4 percent oxygen by volume.

(2) Mixed atmosphere means that the concentration of combustible gases in any part of the containment is below a level that supports combustion or detonation that could cause loss of containment integrity.

(b) Requirements for currently-licensed reactors. Each boiling or pressurized light-water nuclear power reactor with an operating license on [EFFECTIVE DATE] must comply with

the following requirements, as applicable:

(1) *Mixed atmosphere.* All containments must have a capability for ensuring a mixed atmosphere.

(2) *Combustible gas control.* (i) All boiling water reactors with Mark I or Mark II type containments must have an inerted atmosphere.

(ii) All boiling water reactors with Mark III type containments and all pressurized water reactors with ice condenser containments must have the capability for controlling combustible gas generated from a metal-water reaction involving 75 percent of the fuel cladding surrounding the active fuel region (excluding the cladding surrounding the plenum volume) so that there is no loss of containment structural integrity.

(3) *Equipment survivability.* All boiling water reactors with Mark III containments and all pressurized water reactors with ice condenser containments that do not rely upon an inerted atmosphere inside containment to control combustible gases must be able to establish and maintain safe shutdown and containment structural integrity with systems and components capable of performing their functions during and after exposure to the environmental conditions created by the burning of hydrogen. Environmental conditions caused by local detonations of hydrogen must also be included, unless such detonations can be shown unlikely to occur. The amount of hydrogen to be considered must be equivalent to that generated from a metal-water reaction involving 75 percent of the fuel cladding surrounding the active fuel region (excluding the cladding surrounding the plenum volume).

(4) *Monitoring.* (i) Equipment must be provided for monitoring oxygen in containments that use an inerted atmosphere for combustible gas control. Equipment for monitoring oxygen must be functional, reliable, and capable of continuously measuring the concentration of oxygen in the containment atmosphere following a beyond design-basis accident for combustible gas control and accident management, including emergency planning.

(ii) Equipment must be provided for monitoring hydrogen in the containment. Equipment for monitoring hydrogen must be functional, reliable, and capable of continuously measuring the concentration of hydrogen in the containment atmosphere following a beyond design-basis accident for accident management, including emergency planning.

(5) *Analyses.* Each holder of an operating license for a boiling water reactor with a Mark III type of containment or for a pressurized water reactor with an ice condenser type of containment, shall perform an analysis that:

(i) Provides an evaluation of the consequences of large amounts of hydrogen generated after the start of an accident (hydrogen resulting from the metal-water reaction of up to and including 75 percent of the fuel cladding surrounding the active fuel region, excluding the cladding surrounding the plenum volume) and include consideration of hydrogen control measures as appropriate;

(ii) Includes the period of recovery from the degraded condition;

(iii) Uses accident scenarios that are accepted by the NRC staff. These scenarios must be accompanied by sufficient supporting justification to show that they describe the behavior of the reactor system during and following an accident resulting in a degraded core.

(iv) Supports the design of the hydrogen control system selected to meet the requirements of this section; and,

(v) Demonstrates, for those reactors that do not rely upon an inerted atmosphere to comply with paragraph (b)(2)(ii) of this section, that:

(A) Containment structural integrity is maintained. Containment structural integrity must be demonstrated by use of an analytical technique that is accepted by the NRC staff in accordance with § 50.90. This demonstration must include sufficient supporting justification to show that the technique describes the containment response to the structural loads involved. This method could include the use of actual material properties with suitable margins to account for uncertainties in modeling, in material properties, in construction tolerances, and so on; and

(B) Systems and components necessary to establish and maintain safe shutdown and to maintain containment integrity will be capable of performing their functions during and after exposure to the environmental conditions created by the burning of hydrogen, including local detonations, unless such detonations can be shown unlikely to occur.

(c) *Requirements for future applicants and licensees.* The requirements in this paragraph apply to all construction permits or operating licenses under this part, and to all design approvals, design certifications, combined licenses or manufacturing licenses under part 52 of this chapter, any of which are issued after [EFFECTIVE DATE].

(1) *Mixed atmosphere.* All containments must have a capability for ensuring a mixed atmosphere.

(2) *Combustible gas control.* All containments must have an inerted atmosphere or limit hydrogen concentrations in containment during and following an accident that releases an equivalent amount of hydrogen as would be generated from a 100 percent fuel clad-coolant reaction, uniformly distributed, to less than 10 percent and maintain containment structural integrity and appropriate mitigating features.

(3) *Equipment survivability.* Containments that do not rely upon an inerted atmosphere to control combustible gases must be able to establish and maintain safe shutdown and containment structural integrity with systems and components capable of performing their functions during and after exposure to the environmental conditions created by the burning of hydrogen. Environmental conditions caused by local detonations of hydrogen must also be included, unless such detonations can be shown unlikely to occur. The amount of hydrogen to be considered must be equivalent to that generated from a fuel clad-coolant reaction involving 100 percent of the fuel cladding surrounding the active fuel region.

(4) *Monitoring.* (i) Equipment must be provided for monitoring oxygen in containments that use an inerted atmosphere for combustible gas control. Equipment for monitoring oxygen must be functional, reliable, and capable of continuously measuring the concentration of oxygen in the containment atmosphere following a beyond design-basis accident for combustible gas control and accident management, including emergency planning.

(ii) Equipment must be provided for monitoring hydrogen in the containment. Equipment for monitoring hydrogen must be functional, reliable, and capable of continuously measuring the concentration of hydrogen in the containment atmosphere following a beyond design-basis accident for accident management, including emergency planning.

(5) *Analyses.* An applicant shall perform an analysis that demonstrates containment structural integrity. This demonstration must use an analytical technique that is accepted by the NRC staff and include sufficient supporting justification to show that the technique describes the containment response to the structural loads involved. The analysis must address an accident that releases hydrogen generated from 100

percent fuel clad-coolant reaction accompanied by hydrogen burning. Systems necessary to ensure containment integrity must also be demonstrated to perform their function under these conditions.

4. Section 50.46a is added to read as follows:

§ 50.46a Acceptance criteria for reactor coolant system venting systems.

Each nuclear power reactor must be provided with high point vents for the reactor coolant system, for the reactor vessel head, and for other systems required to maintain adequate core cooling if the accumulation of noncondensible gases would cause the loss of function of these systems. High point vents are not required for the tubes in U-tube steam generators. Acceptable venting systems must meet the following criteria:

(a) The high point vents must be remotely operated from the control room.

(b) The design of the vents and associated controls, instruments and power sources must conform to appendix A and appendix B of this part.

(c) The vent system must be designed to ensure that:

(1) The vents will perform their safety functions, and

(2) There would not be inadvertent or irreversible actuation of a vent.

PART 52—EARLY SITE PERMITS; STANDARD DESIGN CERTIFICATIONS; AND COMBINED LICENSES FOR NUCLEAR POWER PLANTS

5. The authority citation for Part 52 continues to read as follows:

Authority: Secs. 103, 104, 161, 182, 183, 186, 189, 68 Stat. 936, 948, 953, 954, 955, 956, as amended, sec. 234, 83 Stat. 444, as amended (42 U.S.C. 2133, 2201, 2232, 2233, 2236, 2239, 2282); secs. 201, 202, 206, 88 Stat. 1242, 1244, 1246, as amended (42 U.S.C. 5841, 5842, 5846).

6. In § 52.47, paragraph (a)(1)(ii) is revised to read as follows:

§ 52.47 Contents of applications

(a) * * *

(1) * * *

(ii) Demonstration of compliance with any technically relevant portions of the Three Mile Island requirements set forth in 10 CFR 50.34(f) except paragraphs (f)(1)(xii), (f)(2)(ix) and (f)(3)(v);

* * * * *

Dated at Rockville, Maryland, this 26th day of July , 2002.

For the Nuclear Regulatory Commission.

Annette Vietti-Cook,

Secretary of the Commission.

[FR Doc. 02–19419 Filed 8–1–02; 8:45 am]

BILLING CODE 7590–01–P

SMALL BUSINESS ADMINISTRATION

13 CFR PART 121

Small Business Size Standards; Waiver of the Nonmanufacturer Rule

AGENCY: Small Business Administration.

ACTION: Notice of intent to grant the nonmanufacturer rule for small arms ammunition manufacturing.

SUMMARY: The U.S. Small Business Administration (SBA) is considering a class waiver of the Nonmanufacturer Rule for small arms ammunition manufacturing. The basis for waivers is that no small business manufacturers are supplying these classes of products to the Federal Government. The effect of a waiver would be to allow otherwise qualified small business nonmanufacturer to supply the products of any domestic manufacturer on a Federal contract set aside for small businesses or awarded through the SBA 8(a) Program. The purpose of this notice is to solicit comments and source information from interested parties.

DATES: Comments and sources must be submitted on or before August 16, 2002.

ADDRESSES: Address comments to Edith Butler, Program Analyst, U.S. Small Business Administration, 409 3rd Street, SW., Washington DC, 20416, Tel: (202) 619–0422.

FOR FURTHER INFORMATION CONTACT: Edith Butler, Program Analyst, (202) 619–0422 FAX (202) 205–7280.

SUPPLEMENTARY INFORMATION: Public Law 100–656, enacted on November 15, 1988, incorporated into the Small Business Act the previously existing regulation that recipients of Federal contracts set aside for small businesses or SBA 8(a) Program procurement must provide the product of a small business manufacturer or processor, if the recipient is other than the actual manufacturer or processor. This requirement is commonly referred to as the Nonmanufacturer Rule. The SBA regulations imposing this requirement are found at 13 CFR 121.406(b). Section 303(h) of the law provides for waiver of this requirement by SBA for any ''class of products'' for which there are no small business manufacturers or processors in the Federal market.

To be considered available to participate in the Federal market on these classes of products, a small business manufacturer must have submitted a proposal for a contract solicitation or received a contract from the Federal Government within the last 24 months. The SBA defines ''class of products'' based on two coding systems. The first is the Office of Management and Budget *North American Industry Classification System (NAICS).* The second is the Product and Service Code established by the Federal Procurement Data System.

This notice proposes to grant the Nonmanufacturer Rule for small arms ammunition manufacturing, North American Industry Classification System (NAICS) 332992. The public is invited to comment or provide source information to SBA on the proposed waiver of the nonmanufacturer rule for small arms ammunition manufacturing, and provide information on potential small business manufacturers for these products.

In an effort to identify potential small business manufacturers, the SBA has searched Procurement Marketing & Access Network (PRO-Net) and the SBA will publish a notice in the **Federal Register**. The public is invited to comment or provide source information to SBA on the proposed waiver of the Nonmanufacturer Rule for these classes of products.

Linda G. Williams,

Associate Administrator for Government Contracting.

[FR Doc. 02–19472 Filed 8–1–02; 8:45 am]

BILLING CODE 8025–01–P

DEPARTMENT OF TRANSPORTATION

Federal Aviation Administration

14 CFR Part 39

[Docket No. 2002–CE–29–AD]

RIN 2120–AA64

Airworthiness Directives; Stemme GmbH & Co. KG Model S10–VT Sailplanes

AGENCY: Federal Aviation Administration, DOT.

ACTION: Notice of proposed rulemaking (NPRM).

SUMMARY: This document proposes to adopt a new airworthiness directive (AD) that would apply to certain Stemme GmbH & Co. KG (Stemme) Model S10–VT sailplanes. This proposed AD would require you to modify the engine compartment fuel and oil system and firewall. This

proposed AD is the result of mandatory continuing airworthiness information (MCAI) issued by the airworthiness authority for Germany. The actions specified by this proposed AD are intended to reduce the potential for a fire to ignite in the engine compartment and increase the containment of an engine fire in the engine compartment. A fire in the engine compartment could lead to loss of control of the sailplane.

DATES: The Federal Aviation Administration (FAA) must receive any comments on this proposed rule on or before September 3, 2002.

ADDRESSES: Submit comments to FAA, Central Region, Office of the Regional Counsel, Attention: Rules Docket No. 2002–CE–29–AD, 901 Locust, Room 506, Kansas City, Missouri 64106. You may view any comments at this location between 8 a.m. and 4 p.m., Monday through Friday, except Federal holidays.

You may also send comments electronically to the following address: *9–ACE–7–Docket@faa.gov.* Comments sent electronically must contain ''Docket No. 2002–CE–29–AD'' in the subject line. If you send comments electronically as attached electronic files, the files must be formatted in Microsoft Word 97 for Windows or ASCII text.

You may get service information that applies to this proposed AD from Stemme GmbH & Co. KG, Gustav-Meyer-Allee 25, D–13355 Berlin, Germany; telephone: 49.33.41.31.11.70; facsimile: 49.33.41.31.11.73. You may also view this information at the Rules Docket at the address above.

FOR FURTHER INFORMATION CONTACT: Mike Kiesov, Aerospace Engineer, FAA, Small Airplane Directorate, 901 Locust, Room 301, Kansas City, Missouri 64106; telephone: (816) 329–4144; facsimile: (816) 329–4090.

SUPPLEMENTARY INFORMATION:

Comments Invited

How Do I Comment on This Proposed AD?

The FAA invites comments on this proposed rule. You may submit whatever written data, views, or arguments you choose. You need to include the rule's docket number and submit your comments to the address specified under the caption **ADDRESSES.** We will consider all comments received on or before the closing date. We may amend this proposed rule in light of comments received. Factual information that supports your ideas and suggestions is extremely helpful in evaluating the effectiveness of this proposed AD action and determining whether we need to take additional rulemaking action.

Are There Any Specific Portions of This Proposed AD I Should Pay Attention To?

The FAA specifically invites comments on the overall regulatory, economic, environmental, and energy aspects of this proposed rule that might suggest a need to modify the rule. You may view all comments we receive before and after the closing date of the rule in the Rules Docket. We will file a report in the Rules Docket that summarizes each contact we have with the public that concerns the substantive parts of this proposed AD.

How Can I Be Sure FAA Receives My Comment?

If you want FAA to acknowledge the receipt of your mailed comments, you must include a self-addressed, stamped postcard. On the postcard, write ''Comments to Docket No. 2002–CE–29–AD.'' We will date stamp and mail the postcard back to you.

Discussion

What Events Have Cauaused This Proposed AD?

The Luftfahrt-Bundesamt (LBA), which is the airworthiness authority for Germany, recently notified FAA that an unsafe condition may exist on certain Stemme Model S10–VT sailplanes. The LBA reports an incident of an in-flight fire on a Model S10–VT sailplane. The accident investigation revealed that the fire was not contained in the engine compartment. The manufacturer conducted a design review and determined that modifications to the fuel and oil system and the firewall design will significantly reduce the potential for a fire to ignite in the engine compartment and increase the containment of an engine fire in the engine compartment.

What Are the Consequences if the Condition Is Not Corrected?

If this condition is not corrected, there is potential for a fire to ignite in the engine compartment and spread into the cockpit. Such a condition could lead to loss of control of the sailplane.

Is There Service Information That Applies to This Subject?

Stemme has issued Service Bulletin Document Number A31–10–057, dated June 7, 2001, Service Bulletin Document Number A31–10–061, dated April 22, 2002, and Installation Instruction Document Number A34–10–061E, dated April 22, 2002.

What Are the Provisions of This Service Information?

These service documents include procedures for:

—Modifying the engine compartment fuel and oil system; and
—Modifying the firewall by sealing all gaps.

What Action Did the LBA Take?

The LBA classified this service information as mandatory and issued German AD 2002–156, dated June 13, 2002, in order to ensure the continued airworthiness of these sailplanes in Germany.

Was This in Accordance With the Bilateral Airworthiness Agreement?

This sailplane model is manufactured in Germany and is type certificated for operation in the United States under the provisions of section 21.29 of the Federal Aviation Regulations (14 CFR 21.29) and the applicable bilateral airworthiness agreement.

Pursuant to this bilateral airworthiness agreement, the LBA has kept FAA informed of the situation described above.

The FAA's Determination and an Explanation of the Provisions of This Proposed AD What Has FAA Decided?

The FAA has examined the findings of the LBA; reviewed all available information, including the service information referenced above; and determined that:

—The unsafe condition referenced in this document exists or could develop on other Stemme Model S10–VT sailplanes of the same type design that are on the U.S. registry;
—The actions specified in the previously-referenced service information should be accomplished on the affected sailplanes; and
—AD action should be taken in order to correct this unsafe condition.

What Would This Proposed AD Require?

This proposed AD would require you to incorporate the actions in the previously-referenced service bulletins.

Cost Impact

How Many Sailplanes Would This Proposed AD Impact?

We estimate that this proposed AD affects 41 sailplanes in the U.S. registry.

What Would Be the Cost Impact of This Proposed AD on Owners/Operators of the Affected Sailplanes?

We estimate the following costs to accomplish the proposed modifications:

Labor cost	Parts cost	Total cost per sailplane	Total cost on U.S. operators Sailplane
10 workhours × $60 per hour = $600	$620.	$1,220.	$1,220 × 41 = $50,020.

Compliance Time of this Proposed AD

What Would Be the Compliance Time of This Proposed AD?

The compliance time of this proposed AD is ''within the next 50 hours time-in-service (TIS) or 3 months after the effective date of this AD, whichever occurs first.''

Why Is the Compliance Time of This Proposed AD Presented in Both Hours TIS and Calendar Time?

The unsafe condition on these sailplanes is not a result of the number of times the sailplane is operated. Sailplane operation varies among operators. For example, one operator may operate the sailplane 50 hours TIS in 3 months while it may take another operator 12 months or more to accumulate 50 hours TIS. For this reason, the FAA has determined that the compliance time of this proposed AD should be specified in both hours time-in-service (TIS) and calendar time in order to ensure this condition is not allowed to go uncorrected over time.

Regulatory Impact

Would This Proposed AD Impact Various Entities?

The regulations proposed herein would not have a substantial direct effect on the States, on the relationship between the national government and the States, or on the distribution of power and responsibilities among the various levels of government. Therefore, it is determined that this proposed rule would not have federalism implications under Executive Order 13132.

Would This Proposed AD Involve a Significant Rule or Regulatory Action?

For the reasons discussed above, I certify that this proposed action (1) is not a ''significant regulatory action'' under Executive Order 12866; (2) is not a ''significant rule'' under DOT Regulatory Policies and Procedures (44 FR 11034, February 26, 1979); and (3) if promulgated, will not have a significant economic impact, positive or negative, on a substantial number of small entities under the criteria of the Regulatory Flexibility Act. A copy of the draft regulatory evaluation prepared for this action has been placed in the Rules Docket. A copy of it may be obtained by contacting the Rules Docket at the location provided under the caption **ADDRESSES.**

List of Subjects in 14 CFR Part 39

Air transportation, Aircraft, Aviation safety, Safety.

The Proposed Amendment

Accordingly, under the authority delegated to me by the Administrator, the Federal Aviation Administration proposes to amend part 39 of the Federal Aviation Regulations (14 CFR part 39) as follows:

PART 39—AIRWORTHINESS DIRECTIVES

1. The authority citation for part 39 continues to read as follows:

Authority: 49 U.S.C. 106(g), 40113, 44701.

§ 39.13 [Amended]

2. FAA amends § 39.13 by adding a new airworthiness directive (AD) to read as follows:

Stemme GMBH & Co. KG: Docket No. 2002–CE–29–AD

(a) *What sailplanes are affected by this AD?* This AD affects Model S10–VT sailplanes, serial numbers 11–002 through 11–072, that are certificated in any category.

(b) *Who must comply with this AD?* Anyone who wishes to operate any of the sailplanes identified in paragraph (a) of this AD must comply with this AD.

(c) *What problem does this AD address?* The actions specified by this AD are intended to reduce the potential for a fire to ignite in the engine compartment and increase the containment of an engine fire in the engine compartment. A fire in the engine compartment could lead to loss of control of the sailplane.

(d) *What actions must I accomplish to address this problem?* To address this problem, you must accomplish the following:

Actions	Compliance	Procedures
Modify the firewall by sealing all gaps and modify the fuel and oil lines in the engine compartment.	Within the next 50 hours time-in-service (TIS) or 3 months after the effective date of this AD, whichever occurs first.	Modify the firewall in accordance with Stemme Service Bulletin A31–10–057, dated June 7, 2001, as specified in Stemme Service Bulletin A31–10–061, dated April 22, 2002. Modify the fuel and oil lines in accordance with Stemme Service Bulletin A31–10–061, dated April 22, 2002, and Stemme Installation Instruction A34–10–061E, dated April 22, 2002.

(e) *Can I comply with this AD in any other way?* You may use an alternative method of compliance or adjust the compliance time if:

(1) Your alternative method of compliance provides an equivalent level of safety; and

(2) The Standards Office Manager, Small Airplane Directorate, approves your alternative. Submit your request through an FAA Principal Maintenance Inspector, who may add comments and then send it to the Standards Office Manager.

Note 1: This AD applies to each sailplane identified in paragraph (a) of this AD, regardless of whether it has been modified, altered, or repaired in the area subject to the requirements of this AD. For sailplanes that have been modified, altered, or repaired so that the performance of the requirements of this AD is affected, the owner/operator must request approval for an alternative method of compliance in accordance with paragraph (e) of this AD. The request should include an assessment of the effect of the modification, alteration, or repair on the unsafe condition addressed by this AD; and, if you have not eliminated the unsafe condition, specific actions you propose to address it.

(f) *Where can I get information about any already-approved alternative methods of compliance?* Contact Mike Kiesov, Aerospace Engineer, FAA, Small Airplane Directorate, 901 Locust, Room 301, Kansas City, Missouri 64106; telephone: (816) 329–4144; facsimile: (816) 329–4090.

(g) *What if I need to fly the sailplane to another location to comply with this AD?* The FAA can issue a special flight permit under sections 21.197 and 21.199 of the Federal Aviation Regulations (14 CFR 21.197 and 21.199) to operate your sailplane to a location where you can accomplish the requirements of this AD.

(h) *How do I get copies of the documents referenced in this AD?* You may get copies of the documents referenced in this AD from

Stemme GmbH & Co. KG, Gustav-Meyer-Allee 25, D–13355 Berlin, Germany; telephone: 49.33.41.31.11.70; facsimile: 49.33.41.31.11.73. You may view these documents at FAA, Central Region, Office of the Regional Counsel, 901 Locust, Room 506, Kansas City, Missouri 64106.

Note 2: The subject of this AD is addressed in German AD 2002–156, dated June 13, 2002.

Issued in Kansas City, Missouri, on July 25, 2002.

James E. Jackson,

Manager, Small Airplane Directorate, Aircraft Certification Service.

[FR Doc. 02–19570 Filed 8–1–02; 8:45 am]

BILLING CODE 4910–13–P

DEPARTMENT OF THE TREASURY

Internal Revenue Service

26 CFR Parts 1 and 31

[REG–133254–02; REG–126100–00]

RIN 1545–BA86; RIN 1545–AY62

Guidance on Reporting of Deposit Interest Paid to Nonresident Aliens

AGENCY: Internal Revenue Service (IRS), Treasury.

ACTION: Notice of proposed rulemaking; notice of public hearing; and withdrawal of previously proposed rulemaking.

SUMMARY: This document contains proposed regulations that provide guidance on the reporting requirements for interest on deposits maintained at U.S. offices of certain financial institutions and paid to nonresident alien individuals that are residents of certain specified countries. These proposed regulations affect persons making payments of interest with respect to such deposits. This document also provides a notice of public hearing on these proposed regulations and withdraws the notice of proposed rulemaking (REG 126100–00, 66 FR 3925) published on January 17, 2001.

DATES: Written or electronic comments must be received by November 14, 2002. Requests to speak (with outlines of oral comments to be discussed) at the public hearing scheduled for 10 a.m. on December 5, 2002, must be received by November 14, 2002. The proposed rule published on January 17, 2001 (66 FR 3925) and corrected on March 21, 2001 (66 FR 15820) and March 22, 2001 (66 FR 16019) is withdrawn as of August 2, 2002.

ADDRESSES: Send submissions to: CC:DOM:ITA:RU (REG–133254–02), room 5226, Internal Revenue Service, POB 7604, Ben Franklin Station, Washington, DC 20044. Submissions also may be hand delivered Monday through Friday between the hours of 8 a.m. and 5 p.m. to: CC:DOM:ITA:RU (REG–133254–02), Courier's Desk, Internal Revenue Service 1111 Constitution Avenue, NW., Washington, DC. Alternatively, taxpayers may submit comments electronically directly to the IRS Internet site at www.irs.gov/regs. The public hearing will be held in Room 4718, Internal Revenue Building, 1111 Constitution Avenue, NW., Washington, DC.

FOR FURTHER INFORMATION CONTACT: Concerning the proposed regulations, Alexandra K. Helou, (202) 622–3840 (not a toll free number); concerning submissions of comments, the hearing, and/or to be placed on the building access list to attend the hearing, Treena Garrett, (202) 622–7180 (not a toll free number).

SUPPLEMENTARY INFORMATION:

Paperwork Reduction Act

The collection of information contained in this notice of proposed rulemaking has been submitted to the Office of Management and Budget for review in accordance with the Paperwork Reduction Act of 1995 (44 U.S.C. 3507(d)). Comments on the collection of information should be sent to the Office of Management and Budget, Attn: Desk Officer for the Department of the Treasury, Office of Information and Regulatory Affairs, Washington, DC 20503, with copies to the Internal Revenue Service, Attn: IRS Reports Clearance Officer, W:CAR:MP:FP:S, Washington, DC 20224. Comments on the collections of information should be received by October 1, 2002. Comments are specifically requested concerning:

Whether the proposed collection of information is necessary for the proper operation of the functions of the Internal Revenue Service, including whether the information will have practical utility;

The accuracy of the estimated burden associated with the proposed collection of information (see below);

How the quality, utility, and clarity of the information to be collected may be enhanced; How the burden of complying with the proposed collection of information may be minimized, including through the application of automated collection techniques or other forms of information technology; and

Estimates of capital or start-up costs and costs of operation, maintenance, and purchase of service to provide information.

The collection of information in these proposed regulations is in §§ 1.6049–4(b)(5)(i) and 1.6049–6(e)(4) (i) and (ii). This information is required to determine if taxpayers have properly reported amounts received as income. The collection of information is mandatory. The likely respondents are businesses and other for-profit institutions.

The estimated average annual burden per respondent and/or recordkeeper required by §§ 1.6049–4(b)(5)(i) and 1.6049–6(e)(4) (i) and (ii) will be reflected in the burdens of Forms 1042, 1042–S and the income tax return of a foreign person.

Further, the estimated average annual burden per respondent and/or recordkeeper for the statement required by § 1.6049–6(e)(4)(i) is as follows:

Estimated total annual reporting burden: 500 hours.

Estimated average annual burden per respondent: 15 minutes.

Estimated number of respondents: 2000.

Estimated annual frequency of responses: Annually.

An agency may not conduct or sponsor, and a person is not required to respond to, a collection of information unless the collection of information displays a valid control number assigned by the Office of Management and Budget.

Books or records relating to a collection of information must be retained as long as their contents may become material in the administration of any internal revenue law. Generally, tax returns and tax return information are confidential, as required by 26 U.S.C. 6103.

Background and Explanation of Provisions

On January 17, 2001, the IRS and Treasury published a notice of proposed rulemaking (REG 126100–00) in the **Federal Register** (66 FR 3925, corrected by 66 FR 15820 and 66 FR 16019) under section 6049 (the 2001 proposed regulations), which would provide that U.S. bank deposit interest paid to any nonresident alien individual must be reported annually to the IRS. Under regulations currently in effect, reporting of U.S. bank deposit interest is required only if the interest is paid to a U.S. person or a nonresident alien individual who is a resident of Canada.

The IRS and Treasury requested comments on the 2001 proposed regulations, and a public hearing regarding the 2001 proposed regulations was held on June 21, 2001. The IRS and Treasury received numerous comments on the proposed regulations, and several

commentators spoke at the public hearing on the 2001 proposed regulations. After careful consideration of all the comments received, the IRS and Treasury have concluded that the 2001 proposed regulations should be withdrawn and a new notice of proposed rulemaking should be issued on this subject. Accordingly, this document withdraws the 2001 proposed regulations and provides new proposed regulations (the 2002 proposed regulations).

Most of the comments received on the 2001 proposed regulations were highly critical of the regulations. In particular, many commentators expressed the view that the administrative burden imposed by the 2001 proposed regulations would significantly outweigh any benefits obtained by the IRS from the additional information collected. Some commentators also stated that the 2001 proposed regulations could have a severe negative impact on U.S. banks, particularly U.S. banks with a deposit base that included a significant number of nonresident alien individuals, some of whom had expressed concerns that the information collected under the 2001 proposed regulations might be misused. Other commentators raised certain technical concerns regarding the 2001 proposed regulations, particularly with respect to the reporting requirements for bank deposit interest paid to joint account holders.

After consideration of the comments received, the IRS and Treasury have concluded that the 2001 proposed regulations were overly broad in requiring annual information reporting with respect to U.S. bank deposit interest paid to any nonresident alien. The IRS and Treasury have decided instead that reporting should be required only for nonresident alien individuals that are residents of certain designated countries. The IRS and Treasury believe that limiting reporting to residents of these countries will facilitate the goals of improving compliance with U.S. tax laws and permitting appropriate information exchange without imposing an undue administrative burden on U.S. banks. Accordingly, the 2002 proposed regulations would modify the current regulations (which require reporting of U.S. bank deposit interest only if paid to Canadian residents) by requiring in addition reporting of U.S. bank deposit interest paid to residents of Australia, Denmark, Finland, France, Germany, Greece, Ireland, Italy, the Netherlands, New Zealand, Norway, Portugal, Spain, Sweden, and the United Kingdom. Payors may, however, at their option, choose to report bank deposit interest paid to all nonresident aliens or to any nonresident alien who is a resident of a country other than the countries listed above. If the IRS and Treasury determine that this list of countries should be modified in the future, regulations providing such a modification will be proposed and comments will be requested on those proposed regulations.

In other respects, the 2002 proposed regulations generally follow the approach set forth in the 2001 proposed regulations. Thus, the 2002 proposed regulations provide that, if a nonresident alien who is a recipient of U.S. bank deposit interest is a resident of a country for which reporting of such interest is required, a copy of Form 1042–S, ''Foreign Person's U.S. Source Income Subject to Withholding'', must be furnished to the nonresident alien. Like the 2001 proposed regulations, the 2002 proposed regulations provide that the payor or middleman can satisfy this requirement by furnishing a copy of Form 1042–S either in person or to the last known address of the nonresident alien.

In addition, to conform to the changes made in the 2002 proposed regulations, the Form 1042–S requirements have been modified with respect to joint accounts. For example, the 2001 proposed regulations provide that, if a joint account holder is a U.S. non-exempt recipient, the payor or middleman must report the entire payment to that person. If all joint account holders are foreign persons, the 2001 proposed regulations require the payor or middleman to report the payment to the nonresident alien individual that is a resident of a country with which the United States has an income tax treaty or a tax information exchange agreement (TIEA). The 2002 proposed regulations retain the requirement that the entire payment be reported to a U.S. non-exempt recipient if there is a U.S. non-exempt recipient that is a joint account holder. However, the 2002 proposed regulations modify the 2001 proposed regulations by providing that, if all joint account holders are foreign persons, reporting is required to any one of the joint account holders that is a resident of one of the listed countries.

Section 1.6049–8(a) currently provides, for purposes of the requirement that U.S. bank deposit interest paid to individuals who are Canadian residents must be reported, that the payor or middleman may rely on the permanent address found on an applicable withholding certificate described in § 1.1441–1(c)(16) (Form W–8) to make the determination of whether the nonresident alien individual resides in Canada. However, the regulation also provides that a payor or middleman may rely on its actual knowledge of the individual's residence address in Canada, even if a valid Form W–8 has not been provided, to make such a determination. The 2002 proposed regulations, like the 2001 proposed regulations, eliminate this ''actual knowledge of the individual's residence address'' rule because it creates a result that is contrary to the presumption rules contained in § 1.1441–1(b)(3)(iii) (and made applicable to reportable payments by § 1.6049–5(d)(2)). In this regard, the presumption rules generally provide that interest on a U.S. bank deposit that cannot be reliably associated with a valid Form W–8 or Form W–9, ''Request for Taxpayer Identification Number and Certification'', must be presumed to be paid to an undocumented U.S. non-exempt recipient. Accordingly, the 2002 proposed regulations clarify that a payor of interest on such a deposit must report the payment on a Form 1099 as made to a U.S. non-exempt recipient in accordance with the presumption rules. Further, such payment is subject to backup withholding under section 3406.

Proposed Effective Date

These regulations are proposed to apply to payments made after December 31 of the year in which they are published as final regulations in the **Federal Register**.

Special Analyses

It has been determined that this notice of proposed rulemaking is not a significant regulatory action as defined in Executive Order 12866. Therefore, a regulatory assessment is not required. It has also been determined that section 553(b) of the Administrative Procedure Act (5 U.S.C. chapter 5) does not apply to these regulations, and, because the regulations do not impose a collection of information on small entities, the Regulatory Flexibility Act (5 U.S.C. chapter 6) does not apply. Pursuant to section 7805(f) of the Code, this notice of proposed rulemaking will be submitted to the Chief Counsel for Advocacy of the Small Business Administration for comment on its impact on small business.

Comments and Public Hearing

Before these proposed regulations are adopted as final regulations, consideration will be given to any written comments (a signed original and eight (8) copies) that are submitted timely (in the manner described in the **ADDRESSES** portion of this preamble) to the IRS. The IRS and Treasury

Department request comments on the clarity of the proposed rules and how they can be made easier to understand. All comments will be available for public inspection and copying.

A public hearing has been scheduled for December 5, 2002, beginning at 10 a.m. in Room 4718, Internal Revenue Building, 1111 Constitution Avenue, NW., Washington, DC. Due to building security procedures, visitors must enter at the main entrance, located at 1111 Constitution Avenue, NW. In addition, all visitors must present photo identification to enter the building. Because of access restrictions, visitors will not be admitted beyond the immediate entrance area more than 30 minutes before the hearing starts. For information about having your name placed on the building access list to attend the hearing, see the **FOR FURTHER INFORMATION CONTACT** portion of this preamble.

The rules of 26 CFR 601.601(a)(3) apply to the hearing. Persons who wish to present oral comments must submit written comments and an outline of the topics to be discussed and the time to be devoted to each topic (a signed original and eight (8) copies) by November 14, 2002. A period of 10 minutes will be allotted to each person for making comments. An agenda showing the scheduling of the speakers will be prepared after the deadline for reviewing outlines has passed. Copies of the agenda will be available free of charge at the hearing.

Drafting Information

The principal author of the regulations is Alexandra K. Helou, Office of Associate Chief Counsel (International). However, other personnel from the IRS and Treasury Department participated in their development.

List of Subjects in 26 CFR Parts 1 and 31

Income taxes, Reporting and recordkeeping requirements.

Withdrawal of Proposed Amendments

Accordingly, under the authority of 26 U.S.C. 7805, the proposed amendment to 26 CFR parts 1 and 31 that was published in the **Federal Register** on Wednesday, January 17, 2001 (66 FR 3925, corrected by 66 FR 15820 and 66 FR 16019) is withdrawn.

Proposed Amendments to the Regulations

Accordingly, 26 CFR parts 1 and 31 are proposed to be amended as follows:

PART 1—INCOME TAXES

Paragraph 1. The authority citation for part 1 continues to read in part as follows:

Authority: 26 U.S.C. 7805 * * *

Par. 2. In § 1.6049–4, paragraph (b)(5) is revised to read as follows:

§ 1.6049–4 Return of information as to interest paid and original issue discount includible in gross income after December 31, 1982.

* * * * *

(b) * * *

(5) *Interest payments to nonresident alien individuals*—(i) *General rule.* In the case of interest aggregating $10 or more paid to a nonresident alien individual (as defined in section 7701(b)(1)(B)) that is reportable under § 1.6049–8(a), the payor shall make an information return on Form 1042–S, ''Foreign Person's U.S. Source Income Subject to Withholding'', for the calendar year in which the interest is paid. The payor or middleman shall prepare and file Form 1042–S at the time and in the manner prescribed by section 1461 and the regulations under that section and by the form and its accompanying instructions. See § 1.6049–6(e)(4) for furnishing a copy of the Form 1042–S to the payee. To determine whether an information return is required for original issue discount, see §§ 1.6049–5(f) and 1.6049–8(a).

(ii) *Effective dates.* Paragraph (b)(5)(i) of this section shall apply for payments made after December 31 of the year in which the final regulations are published in the **Federal Register** with respect to an applicable withholding certificate described in § 1.1441–1(c)(16) (Form W–8) furnished to the payor or middleman after that date. (For interest paid to a Canadian nonresident alien individual on or before December 31 of the year in which final regulations are published in the **Federal Register**, *see* § 1.6049–4(b)(5) in effect prior to [EFFECTIVE DATE OF FINAL RULE] (*See* 26 CFR part 1 revised April 1, 2002.))

* * * * *

Par. 3. Section 1.6049–6 is amended as follows:

1. Paragraph (e)(4) is revised.

2. In paragraph (e)(5), the first sentence is revised and a new sentence is added at the end of the paragraph.

The addition and revisions read as follows:

§ 1.6049–6 Statements to recipients of interest payments and holders of obligations for attributed original issue discount.

* * * * *

(e) * * *

(4) *Special rule for amounts described in § 1.6049–8(a)*—(i) *In general.* In the case of amounts described in § 1.6049–8(a) (relating to certain payments of deposit interest to nonresident alien individuals) paid after December 31 of the year in which the final regulations are published in the **Federal Register**, any person who files a Form 1042–S, ''Foreign Person's U.S. Source Income Subject to Withholding'', under section 6049(a) and § 1.6049–4(b)(5) shall furnish a statement to the recipient of the interest either in person or by first-class mail to the recipient's last known address. The statement shall include a copy of the Form 1042–S required to be prepared pursuant to § 1.6049–4(b)(5) and a statement to the effect that the information on the form is being furnished to the United States Internal Revenue Service and may be furnished to the government of the foreign country where the recipient resides.

(ii) *Joint account holders.* In the case of joint account holders, a payor or middleman must report the entire amount of interest as paid to any one of the joint account holders that provides a valid Form W–9, ''Request for Taxpayer Identification Number and Certification,'' or, if any account holder has not furnished an applicable withholding certificate described in § 1.1441–1(c)(16) (Form W–8) or Form W–9, any one of the joint account holders that is presumed to be a U.S. non-exempt recipient under §§ 1.6049–5(d)(2) and 1.1441–1(b)(3)(iii). If all of the joint account holders have furnished valid Forms W–8 certifying their status as foreign persons and any joint account holder is a resident of one of the countries specified in § 1.6049–8(a), then the payor or middleman must report the payment to any one of the joint account holders that is a resident of one of the countries specified in § 1.6049–8(a) (selected account holder). If, however, any joint account holder, including the selected account holder, requests its own Form 1042–S and provides information regarding the correct amount to be reported to him, the payor or middleman must furnish a Form 1042–S to such account holder and make a corresponding reduction to the amount reported to the selected account holder. If the selected account holder makes such request, the payor or middleman must report the corrected amount to the selected account holder and report the remaining amount to any

other joint account holder that is a resident of one of the countries specified in § 1.6049–8(a).

(5) *Effective dates.* Paragraph (e)(4) of this section applies for payee statements due with respect to payments made after December 31 of the year in which the final regulations are published in the **Federal Register**, without regard to extensions. * * * (For interest paid to a Canadian nonresident alien individual on or before December 31 of the year in which final regulations are published in the **Federal Register**, *see* § 1.6049–6(e)(4) in effect prior to [EFFECTIVE DATE OF FINAL RULE] (*See* 26 CFR part 1 revised April 1, 2002.))

* * * * *

Par. 4. In § 1.6049–8, the section heading and paragraph (a) are revised to read as follows:

§ 1.6049–8 Certain Interest and original issue discount paid to nonresident alien individuals.

(a) *Interest subject to reporting requirement.* For purposes of §§ 1.6049–4, 1.6049–6, and this section and except as provided in paragraph (b) of this section, the term *interest* means interest described in section 871(i)(2)(A) with respect to a deposit maintained at an office within the United States by a nonresident alien individual who is a resident of any of the following countries: Australia, Canada, Denmark, Finland, France, Germany, Greece, Ireland, Italy, the Netherlands, New Zealand, Norway, Portugal, Spain, Sweden, and the United Kingdom. For purposes of the regulations under section 6049, a nonresident alien individual is a person described in section 7701(b)(1)(B). The payor or middleman may rely upon an applicable withholding certificate described in § 1.1441–1(c)(16) (Form W–8) that is valid to determine whether the payment is made to a nonresident alien individual who is a resident of one of the countries for which reporting is required. Generally, amounts described in this paragraph (a) are not subject to backup withholding under section 3406. *See* § 31.3406(g)–1(d) of this chapter. However, if the payor or middleman does not have either a valid Form W–8 or valid Form W–9, ''Request for Taxpayer Identification Number and Certification'', the payor or middleman must report the payment as made to a U.S. non-exempt recipient if it must so treat the payee under the presumption rules of §§ 1.6049–5(d)(2) and 1.1441–1(b)(3)(iii) and must also backup withhold under section 3406. (For interest paid to a Canadian nonresident alien individual on or before December 31 of the year in which final regulations are published in the **Federal Register**, *see* § 1.6049–8(a) in effect prior to [EFFECTIVE DATE OF FINAL RULE] (*See* 26 CFR part 1 revised April 1, 2002.))

* * * * *

PART 31—EMPLOYMENT TAXES AND COLLECTION OF INCOME TAX AT THE SOURCE

Par. 5. The authority citation for part 31 continues to read in part as follows:

Authority: 26 U.S.C. 7805 * * *

Par. 6. In § 31.3406(g)–1, paragraph (d) is revised to read as follows:

§ 31.3406(g)–1 Exceptions for payments to certain payees and certain other payment.

* * * * *

(d) *Reportable payments made to nonresident alien individuals.* A payment of interest that is reported on Form 1042–S as paid to a nonresident alien individual under § 1.6049–8(a) of this chapter is not subject to withholding under section 3406. (For interest paid to a Canadian nonresident alien individual on or before December 31 of the year in which final regulations are published in the **Federal Register**, *see* § 31.3406(g)–1(d) in effect prior to [EFFECTIVE DATE OF FINAL RULE] (*See* 26 CFR part 1 revised April 1, 2002.))

* * * * *

David A. Mader,

Acting Deputy Commissioner of Internal Revenue.

[FR Doc. 02–19348 Filed 7–30–02; 1:35 pm]

BILLING CODE 4830–01–P

DEPARTMENT OF DEFENSE

Corps of Engineers, Department of the Army

33 CFR Part 334

Naval Restricted Area, Naval Submarine Base Bangor, Bangor, WA

AGENCY: U.S. Army Corps of Engineers, DoD.

ACTION: Notice of proposed rulemaking and request for comments.

SUMMARY: The Corps of Engineers is proposing to amend its regulations which establish a restricted area in the waters of Hood Canal adjacent to Naval Submarine Base Bangor, at Bangor, Washington. This amendment will enlarge the existing naval restricted area, and change the enforcement responsibility from Commander, Naval Base, Seattle, Washington (now Commander, Navy Region Northwest) to Commander, Naval Submarine Base Bangor. The amendment to the regulation is necessary to increase the protection of Navy strategic assets moored at Naval Submarine Base Bangor.

DATES: Comments must be submitted on or before September 3, 2002.

ADDRESSES: U.S. Army Corps of Engineers, ATTN: CECW–OR, 441 G Street, NW., Washington DC, 20314–1000.

FOR FURTHER INFORMATION CONTACT: Mr. Frank Torbett, Headquarters Regulatory Branch at (202) 761–4618 or Mr. Jack Kennedy, Corps Seattle District, at (206) 764–6907.

SUPPLEMENTARY INFORMATION: Pursuant to its authorities in section 7 of the Rivers and Harbors Act of 1917 (40 Stat. 266; 33 U.S.C. 1) and Chapter XIX of the Army Appropriation Act of 1919 (40 Stat.892; 33 U.S.C. 3) the Corps proposes to amend the regulations in 33 CFR part 334 by amending Section 334.1220 to enlarge the presently established naval restricted Area 1, in Hood Canal, adjacent to the submarine base. The present boundaries of Area 1 provide a minimum 150-yard restriction from the shoreline of the submarine base and 300-yard restriction from submarine moorage facilities. The amendment would extend the restricted area an average 300 yards further out into Hood Canal, and provide a 500-yard restriction adjacent to the submarine moorage. At its narrowest point along the length of Area 1, Hood Canal is over a mile wide.

With the enlarged naval restricted area implemented, over 1400 yards of deep water would remain in the center and western thirds of Hood Canal, sufficient for the unimpeded passage of recreational and fishing vessels typically using the area, and equally sufficient for larger commercial vessels that occasionally transit the area.

Procedural Reguirements

a. Review Under Executive Order 12866

This proposed rule is issued with respect to a military function of the Defense Department and the provisions of Executive Order 12866 do not apply.

b. Review under the Regulatory Flexibility Act

This proposed rule has been reviewed under the Regulatory Flexibility Act (Public Law 96–354), which requires the preparation of a regulatory flexibility analysis for any regulation that will have a significant economic impact on a substantial number of small entities

(*i.e.,* small businesses and small governments). The Corps expects that the economic impact of the establishment of this restricted area would have no impact on the public, no anticipated navigational hazard or interference with existing waterway traffic, and accordingly, certifies that this proposal, if adopted, will have no significant economic impact on small entities.

c. Review Under the National Environmental Policy Act

The Seattle District has prepared a preliminary Environmental Assessment (EA) for this action. The preliminary EA concluded that this action will not have a significant impact on the human environment. After receipt and analysis of comments from this **Federal Register** posting and the Seattle District's concurrent Public Notice, the Corps will prepare a final environmental document detailing the scale of impacts this action will have upon the human environment. The environmental assessment may be reviewed at the District Office listed at the end of **FOR FURTHER INFORMATION CONTACT,** above.

d. Unfunded Mandates Act

This proposed rule does not impose an enforceable duty among the private sector and, therefore, is not a Federal private sector mandate and is not subject to the requirements of Section 202 or 205 of the Unfunded Mandates Act. We have also found under Section 203 of the Act that small governments will not be significantly and uniquely affected by this rulemaking

List of Subjects in 33 CFR Part 334

Danger zones, Marine safety, Restricted areas, Waterways.

For the reasons set out in the preamble, we propose to amend 33 CFR Part 334 as follows:

PART 334—DANGER ZONE AND RESTRICTED AREA REGULATIONS.

1. The authority citation for Part 334 continues to read as follows:

Authority: 40 Stat. 266; (33 U.S.C. 1) and 40 Stat. 892; (33 U.S.C. 3).

2. Revise § 334.1220 to read as follows:

§ 334.1220 Hood Canal, Bangor; naval restricted areas.

(a) *Hood Canal, Bangor; Naval restricted areas*—(1) *Area No. 1.* That area bounded by a line commencing on the east shore of Hood Canal at latitude 47 deg.46'18'' N, longitude 122 deg.42′18″ W; thence latitude 47 deg.46′32″ N, longitude 122 deg.42′20″ W; thence to latitude 47 deg.46′38″ N, longitude 122 deg.42′52″ W; thence to latitude 47 deg.44′15″ N, longitude 122 deg.44′50″ W; thence to latitude 47 deg.43′53″ N, longitude 122 deg.44′58″ W; thence to latitude 47 deg.43′17″ N, longitude 122 deg.44′49″ W.

(2) *Area No. 2.* Waters of Hood Canal within a circle of 1,000 yards diameter centered on a point located at latitude 47 deg.46′26″ N, longitude 122 deg.42′49″ W.

(3) *The regulations*—(i) *Area No. 1.* No person or vessel shall enter this area without permission from the Commander, Naval Submarine Base Bangor, or his/her authorized representative.

(ii) *Area No. 2.* (A) The area will be used intermittently by the Navy for magnetic silencing operations.

(B) Use of any equipment such as anchors, grapnels, *etc.,* which may foul underwater installations within the restricted area, is prohibited at all times.

(C) Dumping of any nonbuoyant objects in this area is prohibited.

(D) Navigation will be permitted within that portion of this circular area not lying within Area No. 1 at all times except when magnetic silencing operations are in progress.

(E) When magnetic silencing operations are in progress, use of the area will be indicated by display of quick flashing red beacons on the pier located in the southeast quadrant of the area.

(4) *Enforcement.* The regulations in this section shall be enforced by the Commander, Naval Submarine Base Bangor, or his/her authorized representative.

(b) [Reserved]

Dated: July 19, 2002.

Michael G. Ensch,

Acting Chief, Operations Division, Directorate of Civil Works.

[FR Doc. 02–19589 Filed 8–1–02; 8:45 am]

BILLING CODE 3710–GB–P

DEPARTMENT OF DEFENSE

Department of the Army, Corps of Engineers

33 CFR Part 334

United States Navy Restricted Area, Narragansett Bay, East Passage, Coddington Cove, Naval Station Newport, Newport, RI

AGENCY: United States Army Corps of Engineers, DoD.

ACTION: Notice of proposed rulemaking and request for comments.

SUMMARY: The Corps of Engineers is proposing regulations to establish a restricted area on the east side of Narragansett Bay East Passage at Coddington Cove in the vicinity of Naval Station Newport. These regulations will enable the Navy to enhance safety and security around active military vessels berthed at the facility. The regulations will safeguard military vessels and United States government contractor facilities from sabotage and other subversive acts, accidents, or incidents of similar nature. These regulations are also necessary to protect the public from potentially hazardous conditions that may exist as a result of Navy use of the area and its security measures.

DATES: Written comments must be submitted on or before September 3, 2002.

ADDRESSES: U. S. Army Corps of Engineers, ATTN: CECW-OR, 441 G Street, NW., Washington, DC 20314–1000.

FOR FURTHER INFORMATION CONTACT: Mr. Frank Torbett, Headquarters Regulatory Branch, Washington, DC at (202) 761–4618, or Mr. Richard Roach, Corps of Engineers, New England District, at (978) 318–8211 or 1–800–343–4789.

SUPPLEMENTARY INFORMATION: Pursuant to its authorities in Section 7 of the Rivers and Harbors Act of 1917 (40 Stat 266; 33 U.S.C. 1) and Chapter XIX, of the Army Appropriations Act of 1919 (40 Stat 892; 33 U.S.C. 3) the Corps proposes to amend the restricted area regulations in 33 CFR part 334 by adding Section 334.81 which establishes a restricted area in Coddington Cove, off of the Naval Station Newport piers on the eastern side of the East Passage of Narragansett Bay in Newport, Rhode Island. To better protect active naval vessels and personnel stationed at the facility and the general public, the Navy, has requested the Corps of Engineers establish a Restricted Area. This will enable the Navy to keep persons and vessels out of the area at all times, except with the permission of the Commanding Officer, Naval Station Newport.

Procedural Requirements

a. Review Under Executive Order 12866

This proposed rule is issued with respect to a military function of the Defense Department and the provisions of Executive Order 12866 do not apply.

b. Review Under the Regulatory Flexibility Act

These proposed rules have been reviewed under the Regulatory

Flexibility Act (Public Law 96–354) which requires the preparation of a regulatory flexibility analysis for any regulation that will have a significant economic impact on a substantial number of small entities (*i.e.,* small businesses and small Governments). The Corps expects that the economic impact of the establishment of this restricted area would have practically no impact on the public, no anticipated navigational hazard or interference with existing waterway traffic and accordingly, certifies that this proposal if adopted, will have no significant economic impact on small entities.

c. Review Under the National Environmental Policy Act

An environmental assessment has been prepared for this action. We have concluded, based on the minor nature of the proposed additional restricted area regulations, that this action, if adopted, will not have a significant impact to the quality of the human environment, and preparation of an environmental impact statement is not required. The environmental assessment may be reviewed at the District office listed at the end of **FOR FURTHER INFORMATION CONTACT,** above.

d. Unfunded Mandates Act

This proposed rule does not impose an enforceable duty among the private sector and, therefore, is not a Federal private sector mandate and is not subject to the requirements of Section 202 or 205 of the Unfunded Mandates Act. We have also found under Section 203 of the Act, that small Governments will not be significantly and uniquely affected by this rulemaking.

List of Subjects in 33 CFR Part 334

Danger zones, Marine safety, Restricted areas, Waterways.

For the reasons set out in the preamble, the Corps proposes to amend 33 CFR Part 334, as follows:

PART 334—DANGER ZONE AND RESTRICTED AREA REGULATIONS

1. The authority citation for Part 334 continues to read as follows:

Authority: 40 Stat. 266 (33 U.S.C. 1) and 40 Stat. 892 (33 U.S.C. 3).

2. Section 334. 81 would be added to read as follows:

§ 334. 81 Naragansett Bay, East Passage, Coddington Cove, Naval Station Newport, Newport, Rhode Island, Restricted Area.

(a) *The area.* All of the navigable waters of Coddington Cove east of a line that connects Coddington Point at latitude 41° 31′ 24.0″ N, longitude 071° 19′ 24.0″ W; with the outer end of the Coddington Cove Breakwater on the north side of the cove at latitude 41° 31′ 55.7″ N, longitude 071° 19′ 28.2″ W.

(b) *The regulation.* All persons, swimmers, vessels and other craft, except those vessels under the supervision or contract to local military or Naval authority, vessels of the United States Coast Guard, and local or state law enforcement vessels, are prohibited from entering the restricted areas without permission from the Commanding Officer Naval Station Newport, USN, Newport, Rhode Island or his authorized representative.

(c) *Enforcement.* (1) The regulation in this section, promulgated by the United States Army Corps of Engineers, shall be enforced by the United States Navy, Commanding Officer Naval Station Newport, Newport, Rhode Island and/or other persons or agencies as he/she may designate.

(2) Federal and State Law enforcement vessels and personnel may enter the restricted area at any time to enforce their respective laws.

Dated: June 26, 2002.

Karen Durham-Aguilera,

Chief, Operations Division, Directorate of Civil Works.

[FR Doc. 02–19588 Filed 8–1–02; 8:45 am]

BILLING CODE 3710–24–P

ENVIRONMENTAL PROTECTION AGENCY

40 CFR Part 52

[LA–61–3–7561; FRL–7254–6]

Approval and Promulgation of Implementation Plan; State of Louisiana; 1-Hour Ozone Attainment Demonstration; Attainment Date Extension, and Withdrawal of Nonattainment Determination and Reclassification

AGENCY: Environmental Protection Agency.

ACTION: Proposed rule.

SUMMARY: EPA proposes to approve the Baton Rouge 1-hour ozone Attainment Plan and Transport State Implementation Plan (hereinafter referred to as Attainment Plan/Transport SIP) for the Baton Rouge serious ozone nonattainment area (hereinafter referred to as the Baton Rouge area). The attainment demonstration SIP, showing attainment by November 15, 2005, was submitted by the Governor of Louisiana on December 31, 2001. In conjunction with its proposed approval of the attainment demonstration, EPA proposes: extending the ozone attainment date for the Baton Rouge area to November 15, 2005, while retaining the area's current classification as a serious ozone nonattainment area; and withdrawing EPA's June 24, 2002, rulemaking determining nonattainment and reclassification of the Baton Rouge area. EPA is also proposing to find that the Baton Rouge area meets the reasonably available control measures (RACM) requirements of the Act.

In proposing to approve the attainment demonstration, EPA is also proposing to approve the State's enforceable commitment to perform a mid-course review and submit a SIP revision to EPA by May 1, 2004, to approve the motor vehicle emissions budget (MVEB) and an enforceable commitment to submit revised budgets using MOBILE6, and an enforceable transportation control measure (TCM).

This proposed rule also addresses SIP submittals relating to corrections to the 1990 Base Year Emissions Inventory, the 9% Rate-of-Progress Plan, and the 15% Rate-of-Progress Plan.

DATES: Written comments must be received on or before September 3, 2002.

ADDRESSES: All comments should be addressed to Mr. Thomas H. Diggs, Chief, Air Planning Section, Environmental Protection Agency, Region 6, 1445 Ross Avenue, Dallas, Texas 75202–2733.

Copies of the Louisiana submittals addressed in this proposed rule, and other relevant documents in support of this proposal are available for public inspection during normal business hours at the following addresses: U.S. Environmental Protection Agency, Region 6, Air Planning Section, 1445 Ross Avenue, Dallas, Texas 75202; Louisiana Department of Environmental Quality, 7920 Bluebonnet Boulevard, Baton Rouge, Louisiana 70884. Please contact the appropriate office at least 24 hours in advance.

FOR FURTHER INFORMATION CONTACT: Ms. Maria L. Martinez, Air Planning Section (6PD–L), EPA Region 6, 1445 Ross Avenue, Dallas, Texas 75202–2733, telephone (214) 665–2230.

SUPPLEMENTARY INFORMATION: The use of ''we,'' ''us,'' or ''our'' in this document refers to EPA.

Table of Contents

I. Background
A. Basis for the State's Attainment Demonstration
B. Components of a Modeled Attainment Demonstration
C. Framework for Proposing Action on the Attainment Demonstration SIP

D. Criteria for Attainment Date Extensions
II. Technical Review of the Submittals
A. Summary of the State Submittals
1. General Information
2. Modeling Procedures, Input Data, and Results
3. Emission Control Strategies
4. Motor Vehicle Emissions Budgets
5. RACM Analysis and Determination of Availability
6. Revisions to the 15% Rate-of-Progress Plan (ROPP) for the control of VOC emissions, the 1990 base year emissions inventory, and the Post-1996 ROPP.
B. Environmental Protection Agency Review of the Submittals
1. Adequacy of the State's Demonstration of Attainment
2. Adequacy of the Emissions Control Strategies
3. Adequacy of the Request for Extension of the Attainment Date
a. Identification of the Area as a Downwind Area Affected by Ozone Transport
b. Submittal of an Approvable Attainment Demonstration
c. Adoption of all Applicable Local Measures Required Under the Area's Current Ozone Classification
d. Implementation of All Adopted Measures as Expeditiously as Practicable and No Later Than the Time Upwind Controls are Expected.
4. Determination of RACM Availability
5. Adequacy of ROPPs and the 1990 Base Year Inventory
6. Completeness Finding
III. Proposed Action
IV. Administrative Requirements

I. Background

A. Basis for State's Attainment Demonstration

What Are the Relevant Clean Air Act Requirements?

The Clean Air Act (Act or CAA) requires EPA to establish National Ambient Air Quality Standards (NAAQS) for certain widespread pollutants that cause or contribute to air pollution that is reasonably anticipated to endanger public health or welfare, Clean Air Act sections 108 and 109. In 1979, EPA promulgated the 1-hour ground-level ozone standard of 0.12 parts per million (ppm) (120 parts per billion (ppb)). 44 FR 8202 (February 9, 1979).

Ground-level ozone is not emitted directly by sources. Rather, VOC and Nitrogen oxides (NO_X), emitted by a wide variety of sources, react in the presence of sunlight to form ground-level ozone. NO_X and VOC are referred to as precursors of ozone.

Ozone formation is accelerated or enhanced under certain meteorological conditions, such as high temperatures and low wind speeds. Higher ozone concentrations occur downwind of areas with relatively high VOC and NO_X concentrations or in areas subject to relatively high background ozone and ozone precursor concentrations (ozone and ozone precursors entering an area as the result of transport from upwind source areas).

VOC emissions are produced by a wide variety of sources, including stationary and mobile sources. Significant stationary sources of VOC include industrial solvent usage, various coating operations, industrial and utility combustion units, petroleum and oil storage and marketing operations, chemical manufacturing operations, and personal solvent usage. Significant mobile sources of VOC include on-road vehicle usage and off-road vehicle and engine usage, such as farm machinery, aircraft, locomotives, and motorized, lawn care and garden implements.

NO_X emissions are produced primarily through combustion processes, including industrial and utility boiler use, process heaters and furnaces, and on-road and off-road mobile sources.

An area exceeds the 1-hour ozone standard each time an ambient air quality monitor records a 1-hour average ozone concentration above 0.124 ppm in any given day (only the highest 1-hour ozone concentration at the monitor during any 24 hour day is considered when determining the number of exceedance days at the monitor). An area violates the ozone standard if, over a consecutive 3-year period, more than 3 days of exceedances occur at any monitor in the area. 40 CFR part 50, appendix H.

The highest of the fourth-highest daily peak ozone concentrations over the 3 year period at any monitoring site in the area is called the ozone design value for the area. The Act, as amended in 1990, required EPA to designate as nonattainment any area that was violating the 1-hour ozone standard, generally based on air quality monitoring data for the 3 year period from 1987 through 1989 period. Clean Air Act section 107(d)(4); 56 FR 56694 (November 6, 1991). The Act further classified these areas, based on the areas' ozone design values, as marginal, moderate, serious, severe, or extreme. Marginal areas were suffering the least significant ozone nonattainment problems, while the areas classified as severe and extreme had the most significant ozone nonattainment problems.

The control requirements and date by which attainment is to be achieved vary with an area's classification. Marginal areas were subject to the fewest mandated control requirements and had the earliest attainment date, November 15, 1993. Severe and extreme areas are subject to more stringent planning requirements but are provided more time to attain the standard. Serious areas were required to attain the 1-hour standard by November 15, 1999, and severe areas are required to attain by November 15, 2005, or November 15, 2007, depending on each area's ozone design value for the period from 1987 through 1989. The Baton Rouge area was classified as serious and its attainment date was November 15, 1999. The Baton Rouge area encompasses East Baton Rouge, West Baton Rouge, Ascension, Iberville, and Livingston Parishes (40 CFR 81.319).

The requirements of the Act for ozone attainment demonstrations for serious ozone nonattainment areas are specified in several sections of the Act. Section 182(c) sets forth the requirements for serious areas. Section 172(c)(6) of the Act requires all nonattainment area SIPs to include enforceable emission limitations, and such other control measures, means or techniques as well as schedules and timetables for compliance, as may be necessary or appropriate to provide for attainment by the applicable attainment date. Section 172(c)(1) requires the implementation of all reasonably available control measures (including, at a minimum, Reasonably Available Control Technology (RACT)) and requires the SIP to provide for attainment of the NAAQS. Section 182(c) incorporates Section 182(b)(1)(A) and requires the SIP for serious areas to provide for reductions in emissions of VOC and NO_X from the baseline emissions of at least 3 percent averaged over each consecutive 3-year period until the applicable attainment date. Finally, section 182(c)(2)(A) requires the use of photochemical grid modeling or other methods judged to be at least as effective to demonstrate attainment of the ozone NAAQS by the applicable attainment date. EPA's ''General Preamble for the Implementation of Title I of the Clean Air Act Amendments of 1990'' (57 FR 13498, April 16, 1992) provides the interpretative basis for EPA's rulemakings under the nonattainment plan provisions of the Act (hereinafter referred to as the General Preamble). As part of today's proposal, EPA is proposing action on the attainment demonstration SIP revisions submitted by the State of Louisiana for the Baton Rouge area and its associated ozone modeling domain. See Section I.B. below.

In general, an attainment demonstration SIP includes a modeling analysis showing how an area will achieve the standard by its attainment date and the emission control measures

necessary to achieve attainment. The attainment demonstration SIPs must include motor vehicle emission budgets for transportation conformity purposes. Transportation conformity is a process required by Section 176(c) of the Act for ensuring that emissions from all on-road sources are consistent with the attainment of the standard. Ozone attainment demonstrations must include the estimates of motor vehicle VOC and NO_X emissions that are consistent with attainment, which then act as a budget or ceiling for the purposes of determining whether transportation plans, programs, and projects conform to the attainment SIP. Refer to Section II.A.4. for more details.

What Is the History and Time Frame for the State Attainment Demonstration SIP?

On May 10, 2000, the Governor of Louisiana requested an attainment date extension for the Baton Rouge area. On May 9, 2001, EPA proposed its finding that the Baton Rouge area did not attain the 1-hour ozone NAAQS by the applicable attainment date (66 FR 23646). The proposed finding was based upon ambient air quality data from the years 1997, 1998, 1999. These data show that the 1-hour ozone NAAQS of 0.12 parts per million (ppm) was exceeded on an average of more than one day per year over this three-year period. Furthermore, the area did not qualify for an attainment date extension under section 181(a)(5) as the area had more than 1 exceedance of the 1-hour standard in 1999. EPA also proposed that the appropriate reclassification of the area was too severe.

In that proposed action, we also stated that Louisiana was seeking an extension of its attainment date pursuant to EPA's July 16, 1998, guidance memorandum entitled ''Extension of Attainment Dates for Downwind Transport Areas,'' published in a March 25, 1999, **Federal Register** notice (64 FR 14441) (hereinafter referred to as EPA's extension policy). EPA's extension policy includes EPA's interpretation of the Act regarding the extension of attainment dates for ozone nonattainment areas that have been classified as moderate or serious for the 1-hour ozone standard and which are downwind of areas that have interfered with their ability to demonstrate attainment of the ozone standard by dates prescribed in the Act.

EPA proposed to take final action on the determination of nonattainment and reclassification of the Baton Rouge area only after the area had received an opportunity to qualify for an attainment date extension under the extension policy. Louisiana submitted an Attainment Plan/Transport SIP on December 31, 2001, for the Baton Rouge area. EPA was in the process of reviewing the Attainment Plan/Transport SIP when the United States District Court for the Middle District of Louisiana entered a Judgment on March 7, 2002, ordering EPA to determine, by June 5, 2002, whether the Baton Rouge area had attained the applicable ozone standard under the CAA. *LEAN* v. *Whitman*, No. 00–879–A. In compliance with Court's Order, on June 24, 2002, (67 FR 42688) we published in the **Federal Register** our determination that the Baton Rouge area did not attain the 1-hour ozone standard by November 15, 1999. By operation of law, that determination results in the Baton Rouge area being reclassified from a serious to a severe nonattainment area on the effective date of that rule. EPA concurrently proposed to extend the effective date of our determination from August 23, 2002, to October 4, 2002 (67 FR 42697, June 24, 2002). In the June 24, 2002, proposed rulemaking, EPA also set forth its intent to withdraw the final determination and reclassification, if EPA granted the State an attainment date extension before the effective date of the determination and reclassification rule.

What Is the Time Frame for Taking Action on the Attainment Demonstration SIPs?

Louisiana submitted the attainment demonstration SIP revisions and supporting documentation between December 2001 and July 2002. EPA believes that it is important to keep the process moving forward in evaluating these plans and, as appropriate, approving them. In today's **Federal Register**, EPA is proposing to approve the Attainment Demonstration SIP. EPA is taking separate actions on other related revisions to the Baton Rouge SIP, including the Inspection and Maintenance Program (67 FR 44410, July 2, 2002), NO_X regulations (67 FR 30638, May 7, 2002, and 67 FR 48095, July 23, 2002), New Source Review (see 67 FR 48090, July 23, 2002), emissions reductions credit banking (see 67 FR 48083, July 23, 2002), Contingency Measures (see 67 FR 35468, May 20, 2002), and SIP revisions dealing with VOC emissions from industrial wastewater (67 FR 41840, June 20, 2002). EPA will not take final action to approve the attainment demonstration and extension of the attainment data unless and until it completes action on all other required rules.

The anticipated schedule for actions on the State's submittals has been set forth in a recent proposed rulemaking June 24, 2002, (67 FR 42697). EPA intends to complete rulemaking on the attainment demonstration and attainment date extension for the Baton Rouge area after it completes action on the submittals from Louisiana of the additional measures necessary to support the attainment demonstration and necessary to address the criteria of the extension policy. Provided EPA has taken final action on all other required rules, EPA plans to send a notice of final rulemaking on the attainment demonstration and attainment date extension to the Office of the Federal Register no later than October 4, 2002, for publication.

What Action Is EPA Proposing Regarding the Determination of Nonattainment as of November 15, 1999, and Reclassification Published on June 24, 2002?

EPA is here proposing to withdraw the June 24, 2002, Notice of Nonattainment and Reclassification, if EPA issues a final rulemaking granting an attainment date extension prior to the effective date of the Notice of Nonattainment. EPA believes this is appropriate for a number of reasons. Section 181(b)(2)(A) of the Act requires that EPA determine attainment within six months of the attainment date. If the attainment date were extended, there would be a new deadline for the determination. See section I.D. below. Thus if the attainment date were extended, EPA's obligation to determine attainment would not yet have occurred and EPA could withdraw the published nonattainment determination and the consequent reclassification, which would not yet have gone into effect. Such a course would harmonize the need to allow the Agency to fulfill its duty to take into account upwind transport, while adhering to a fixed and very near-term schedule. See EPA's rulemaking in St. Louis, Missouri, 66 FR 33995 (June 26, 2001). See also EPA's recent granting of an attainment date extension in Atlanta, Georgia. 67 FR 30,574 (May 7, 2002).

On July 2, 2002, the U.S. Court of Appeals for the District of Columbia vacated EPA's approval of an attainment date extension for the Washington, DC ozone nonattainment area. *Sierra Club* v. *EPA*, Nos. 01–1070 and 01–1158 (D.C. Cir., 2002). EPA is currently evaluating this decision and considering what impact it may have on EPA's future actions concerning the Baton Rouge area.

B. Components of a Modeled Attainment Demonstration

EPA provides guidance (GUIDELINE FOR REGULATORY APPLICATION OF THE URBAN AIRSHED MODEL, July 1991; Guidance on the Use of Modeled Results to Demonstrate Attainment of the Ozone NAAQS, EPA–454/B–95–007, June 1996; and Guidance for Improving Weight of Evidence Through Identification of Additional Emission Reductions, Not Modeled, November 1999) to which States may refer when developing a modeled attainment demonstration and supplementing it with additional evidence to demonstrate attainment. To have a complete modeling demonstration submission, States should have submitted the modeling analyses and identified any additional evidence that EPA should consider in evaluating whether the area will attain the standard. Additional components are discussed below.

What EPA Guidelines Apply to the Attainment Demonstration Submittals?

The following documents, among others, contain EPA's guidelines affecting the content and review of ozone attainment demonstration submittals:

1. Guideline for Regulatory Application of the Urban Airshed Model, EPA–450/4–91–013, July 1991. Web site: *http://www.epa.gov/ttn/scram/* (file name: ''UAMREG'').
2. Memorandum, ''The Ozone Attainment Test in State Implementation Plan (SIP) Modeling Demonstrations,'' from Joseph A. Tikvart, Office of Air Quality Planning and Standards, December 16, 1992.
3. Guidance on Urban Airshed Model (UAM) Reporting Requirements for Attainment Demonstrations, EPA–454/R–93–056, March 1994. Web site: *http://www.epa.gov/ttn/scram/* (file name: ''UAMRPTRQ'').
4. Memorandum, ''Ozone Attainment Demonstrations,'' from Mary D. Nichols, Assistant Administrator for Air and Radiation, March 2, 1995. Web site: *http://www.epa.gov/ttn/oarpg/t1pgm.html.*
5. Guidance on the Use of Modeled Results to Demonstrate Attainment of the Ozone NAAQS, EPA–454/B–95–007, June 1996. Web site: *http://www.epa.gov/ttn/scram/* (file name: ''O3TEST'').
6. Memorandum, ''Guidance for Implementing the 1-Hour Ozone and Pre-Existing PM10 NAAQS,'' from Richard Wilson, Office of Air and Radiation, December 29, 1997. Web site: *http://www.epa.gov/ttn/oarpg/t1pgm.html.*
7. Memorandum, ''Extension of Attainment Dates for Downwind Transport Areas,'' from Richard D. Wilson, Acting Assistant Administrator for Air and Radiation, July 16, 1998.
8. Memorandum, ''Guidance on Motor Vehicle Emissions Budgets in One-Hour Ozone Attainment Demonstrations,'' from Merrylin Zaw-Mon, Acting Director of the Regional and State Programs Division, November 3, 1999. Web site: *http://www.epa.gov/ttn/oarpg/t1pgm.html.*
9. Memorandum, ''Guidance on the Reasonably Available Control Measures (RACM) Requirement and Attainment Demonstration Submissions for Ozone Nonattainment Areas,'' from John S. Seitz, Director of Office of Air Quality Planning and Standards, November 30, 1999.
10. Guidance for Improving Weight of Evidence Through Identification of Additional Emission Reductions, Not Modeled, Office of Air Quality Planning and Standards, November 1999. Web site: *http://www.epa.gov/ttn/scram/* (file name: ''ADDWOE1H'');
11. Procedures for Emission Inventory Preparation, Volume IV: Mobile Sources (Revised) (1992);
12. User's Guide to MOBILE5 (Mobile Source Emission Factor Model), May 1994;
13. Memorandum, ''Ozone Attainment Dates for Areas Affected by Overwhelming Transport,'' from Mary D. Nichols, Assistant Administrator for Air and Radiation, Environmental Protection Agency, September 1994.

What Are the Modeling Requirements for the Attainment Demonstration?

For purposes of demonstrating attainment, the Act requires States containing serious or above ozone nonattainment areas to use photochemical grid modeling or an analytical method judged by EPA to be at least as effective. The photochemical grid model is set up using meteorological conditions conducive to the formation of ozone in the nonattainment area and its modeling domain. Emissions for a base year are used to evaluate the model's ability to reproduce actual monitored air quality values. Following validation of the modeling system for a base year, emissions are projected to an attainment year to predict air quality changes in the attainment year due to the emission changes, which include growth up to and controls implemented by the attainment year. A modeling domain is chosen that encompasses the nonattainment area. Attainment is demonstrated when all predicted ozone concentrations inside the modeling domain are at or below the ozone standard or an acceptable upper limit above the standard under certain conditions provided in EPA's guidance. When the predicted concentrations are above the standard or upper limit, EPA guidance provides for the use of an optional weight-of-evidence determination which incorporates other analyses, such as air quality and emissions trends, to address uncertainty inherent in the application of photochemical grid models. This latter approach may be used under certain circumstances to support the demonstration of attainment.

EPA guidance identifies the features of a modeling analysis that are essential to obtain credible results. First, the State develops and implements a modeling protocol. The modeling protocol describes the methods and procedures to be used in conducting the modeling analyses and provides for policy oversight and technical review by individuals responsible for developing or assessing the attainment demonstration (State and local agencies, EPA, the regulated community, and public interest groups). Second, for purposes of developing the information to put into the model, the State selects air pollution days, *i.e.,* days in the past with high ozone concentrations exceeding the standard, that are representative of the ozone pollution problem for the nonattainment area. Third, the State identifies the appropriate dimensions of the area to be modeled, *i.e.*, the modeling domain size. The domain should be larger than the designated nonattainment area to reduce uncertainty in the boundary conditions and should include any large upwind sources just outside the nonattainment area. In general, the domain is considered the local area where control measures are most beneficial to bring the area into attainment. Alternatively, a much larger modeling domain may be established, addressing the impacts of both local and regional emission control measures on a number of ozone nonattainment areas. In both cases, the attainment determination is based on the review of ozone predictions within the local area where control measures are most beneficial to bring the area into attainment (referred to as the local modeling domain). Fourth, the State determines the grid resolution. The horizontal and vertical resolutions in the model can significantly affect the modeled results of dispersion and transport of emission plumes. Artificially large grid cells (too few vertical layers and horizontal grids) may dilute concentrations and may not

properly consider impacts of complex terrain, complex meteorology, and land/water interfaces. Fifth, the State generates meteorological and emissions data that describe atmospheric conditions and emissions inputs reflective of the selected high ozone days. Finally, the State verifies that the modeling system is properly simulating the chemistry and atmospheric conditions through diagnostic analyses and model performance tests (generally referred to as model validation). Once these steps are satisfactorily completed, the model is ready to be used to generate air quality estimates to support an attainment demonstration.

The modeled attainment test compares model predicted 1-hour daily maximum ozone concentrations in all grid cells for the attainment year to the level of the ozone standard. A predicted peak ozone concentration above 0.124 ppm (124 ppb) indicates that the area is expected to exceed the standard in the attainment year. This type of test is often referred to as an exceedance test. EPA's June 1996 guidance recommends that States use either of two exceedance tests for the 1-hour ozone standard: a deterministic test or a statistical test.

Under the deterministic test, the State compares predicted 1-hour daily maximum ozone concentrations for each modeled day [1] to the attainment level of 0.124 ppm. If none of the predictions exceed 0.124 ppm, the test is passed.

The statistical test takes into account the fact that the form of the 1-hour ozone standard allows exceedances. If, over a 3 year period, the area has an average of 1 or fewer ozone standard exceedances per year at any monitoring site, the area is not violating the standard. Thus, if the State models a severe day (considering meteorological conditions that are very conducive to high ozone levels and that should lead to fewer than 1 exceedance per year at any location in the nonattainment area and in the modeling domain over a 3 year period), the statistical test provides that a prediction above 0.124 ppm up to a certain upper limit may be consistent with attainment of the standard.

The acceptable upper limit above 0.124 ppm is determined by examining the size of exceedances at monitoring sites which meet or attain the 1-hour standard. For example, a monitoring site for which the 4 highest 1-hour average concentrations over a 3 year period are 0.136 ppm, 0.130 ppm, 0.128 ppm, and 0.122 ppm is attaining the standard. To identify an acceptable upper limit, the statistical likelihood of observing ozone air quality exceedances of the standard of various concentrations is equated to the severity of the modeled day. The upper limit generally represents the maximum ozone concentration level observed at a location on a single day and it would be the only reading above that standard that would be expected to occur no more than an average of once a year over a 3 year period. Therefore, if the maximum ozone concentration predicted by the model is below the acceptable upper limit, in this case 0.136 ppm, then EPA might conclude that the modeled attainment test is passed. Generally, exceedances well above 0.124 ppm are very unusual at monitoring sites meeting the standard. Thus, these upper limits are rarely significantly higher than the attainment level of 0.124 ppm.

What Are the Additional Analyses That May Be Considered When the Modeling Fails To Show Attainment?

When the modeling does not conclusively demonstrate that the area will attain, additional analyses may be presented to help determine whether the area will attain the standard. As with other predictive tools, there are inherent uncertainties associated with modeling and its results. For example, there are uncertainties in some of the modeling inputs, such as the meteorological and emissions data bases for individual days and in the methodology used to assess the severity of an exceedance at individual sites. EPA's guidance recognizes these limitations and provides a means for considering other evidence to help assess whether attainment of the standard is likely. The process by which this is done is called a weight-of-evidence determination.

Under a weight-of-evidence determination, the State can rely on and EPA will consider factors such as: model performance and results, episode selection, other modeled attainment tests, *e.g.,* relative reduction factor analysis; other modeled outputs, *e.g.,* changes in the predicted frequency and pervasiveness of exceedances and predicted changes in the design value; actual observed air quality trends; estimated emission trends; analyses of air quality monitored data; the responsiveness of the model predictions to further controls; and, whether there are additional control measures that are or will be approved into the SIP but were not included in the modeling analysis. This list is not an exhaustive list of factors that may be considered and these factors could vary from case to case. EPA's guidance contains no limit on how close a modeled attainment test must be to passing to conclude that other evidence besides a modeled attainment test is a sufficiently compelling case for attainment. However, the further a modeled attainment test is from being passed, the more compelling the weight-of-evidence needs to be.

C. Framework for Proposing Action on the Attainment Demonstration SIP

In addition to the modeling analysis and weight-of-evidence determination demonstrating attainment, EPA has identified the following key elements which must be present in order for EPA to approve the 1-hour attainment demonstration SIP.

1. Clean Air Act Measures and Other Measures Relied on in the Attainment Demonstration State Implementation Plan

The attainment demonstration must incorporate the emission impacts of any emission control measures needed to achieve attainment. The rules for these emission controls must also have been adopted by the State and approved by EPA as part of the SIP no later than the time EPA finally approves the attainment demonstration. The emission controls for these sources must be implemented as expeditiously as practicable but not later than the applicable attainment date.

For purposes of fully approving the State's attainment demonstration SIP, the State must adopt and submit all VOC and NO_X control regulations for affected sources within the State and within the local modeling domain as reflected in the adopted emission control strategy and as reflected in the attainment demonstration.

The measures required for serious ozone nonattainment areas by section 182(c) of the CAA include: (1) Attainment and reasonable further progress demonstrations; (2) enhanced vehicle inspection and maintenance (I/M) programs; (3) clean-fuel vehicle programs; (4) RACT for VOC and NO_X; (5) New Source Review (NSR) regulations for VOC and NO_X, including an offset ratio of 1.2:1 and a major VOC and NO_X source size cutoff of 50 tons per year (TPY); (6) an enhanced air monitoring program; and (7) contingency provisions. These requirements are specified in sections 182(c) and 182(f) of the Act.

To receive an extension of the attainment date, under the extension policy, the State must have adopted the emission control measures required under the Act for the area's classification or must have established negative declarations for the source

[1] The initial, ''ramp-up'' days for each episode are excluded from this determination.

categories for which the area has no major sources that are subject to Clean Air Act requirements.

2. Motor Vehicle Emissions Budget

An attainment demonstration SIP must estimate the motor vehicle emissions that will be produced in the attainment year and must demonstrate that this emissions level, when considered with emissions from all other sources, is consistent with attainment. Generally when a state makes an initial SIP submittal, EPA conducts an expedited review, including an opportunity for public comment, to determine if the submitted budgets meet the adequacy criteria contained in the transportation conformity rule (40 CFR 93.118). A motor vehicle emissions budget contained in an initial SIP submittal cannot be used to determine the conformity of the transportation plans and programs to the SIP, as required by section 176(c) of the Act, until it is found adequate. EPA then conducts a review of the entire SIP submittal to determine if the SIP, including the attainment motor vehicle emissions budgets, can be approved. An appropriately identified motor vehicle emissions budget is a necessary part of an attainment SIP.

D. Criteria for Attainment Date Extensions

What Is EPA's Policy With Regard to an Ozone Attainment Date Extension?

EPA's policy regarding an extension of the ozone attainment date for the Baton Rouge area is addressed in EPA's notice of proposed rulemaking dated May 9, 2001. 66 FR 23646. In the May 9, 2001, document, EPA proposed to reclassify the Baton Rouge area to a severe ozone nonattainment area, but also provided notice of the area's potential eligibility for an attainment date extension based on the July 16, 1998 EPA guidance memorandum. In today's document, EPA proposes to approve the State's request for an attainment date extension under that policy provided that EPA issues a final approval of the State's attainment demonstration and any other required local measures. The specifics of the attainment date policy are repeated below for clarity.

That memorandum stated that EPA will consider extending the attainment date for an area or a State that:

(1) Has been identified as a downwind area affected by transport from either an upwind area in the same State with a later attainment date or an upwind area in another State that significantly contributes to downwind ozone nonattainment;

(2) Has submitted an approvable attainment demonstration with any necessary, adopted local measures and with an attainment date that shows it will attain the 1-hour standard no later than the date that the emission reductions are expected from upwind areas under the final NO_X SIP call (by 2003) and/or the statutory attainment date for upwind nonattainment areas, i.e., assuming the boundary conditions reflecting those upwind emission reductions;

(3) Has adopted all applicable local measures required under the area's current ozone classification and any additional emission control measures demonstrated to be necessary to achieve attainment, assuming the emission reductions occur as required in the upwind areas; and

(4) Has provided that it will implement all adopted measures as expeditiously as practicable, but no later than the date by which the upwind reductions needed for attainment will be achieved.

Once an area receives an extension of its attainment date based on ozone/precursor transport impacts, the area would no longer be subject to reclassification to a higher ozone nonattainment classification. If the Baton Rouge area is granted an attainment date extension, it would no longer be subject to a reclassification to severe nonattainment for ozone and no longer subject to the additional emission control requirements that would result from the reclassification to severe nonattainment.

Louisiana has requested an extension of the attainment date for the Baton Rouge area in conjunction with the ozone attainment demonstration submittals. The ozone attainment demonstration uses November 15, 2005, as the appropriate ozone attainment date. EPA is proposing to extend the attainment date for the Baton Rouge area to November 15, 2005, if EPA takes final action to approve the attainment demonstration and any other required local measures. For a discussion of how the Baton Rouge area satisfies the criteria for the attainment date extension, see section II.D. below.

II. Technical Review of the Submittals

A. Summary of the State Submittals

1. General Information

When Were the Ozone Attainment Demonstration State Implementation Plan Revisions Submitted to the Environmental Protection Agency?

Louisiana has made the following submittals, which in whole or in part concern the ozone attainment demonstration and an extension of the attainment date for the Baton Rouge area:

(a) On December 31, 2001, LDEQ submitted an ozone attainment demonstration and transport SIP revision. The SIP revision included:

i. A revision to the 15% ROPP for the control of VOC emissions in the Baton Rouge area. The 15% Rate ROPP was approved by EPA on October 22, 1996 (61 FR 54737).

ii. Revisions to the 1990 base year emissions inventory. The inventory was approved on July 2, 1999 (64 FR 35930).

iii. Revisions to the Post-1996 ROPP. The Post-1996 ROPP was approved on July 2, 1999 (64 FR 35930).

iv. Revisions to the I/M program.

v. Attainment MVEBs for 2005 for VOCs and NO_X.

vi. An enforceable commitment to submit revised MVEBs within 24 months after the release of MOBILE6.

vii. An enforceable commitment for mid-course review.

viii. An enforceable transportation control measure referred to as the Advanced Transportation Management System.

ix. An emissions control strategy that incorporates federal, state, and local control measures.

x. Revisions to Louisiana's New Source Review rules.

(b) On February 1, 2002, LDEQ submitted the changes to the proposed rule for the control of NO_X emissions.

(c) On February 27, 2002, LDEQ submitted final rules for the emission reductions credit banking program and for the control of NO_X emissions.

(d) On February 27, 2002, LDEQ also submitted final revisions to the contingency measures proposed in the December 31, 2002, SIP submittal.

(e) On April 8, 2002, LDEQ submitted a letter requesting parallel processing of revisions to the State's NO_X regulations.

(f) On May 20, 2002, LDEQ submitted a letter concerning the revisions to the rulemaking dealing with VOC emissions from industrial wastewater.

EPA is taking separate actions on certain revisions to the Baton Rouge SIP, including the Inspection and Maintenance Program (67 FR 44410,

July 2, 2002), NO_X regulations (67 FR 30638, May 7, 2002, and 67 FR 48095, July 23, 2002), New Source Review (see 67 FR 48090, July 23, 2002), emissions reductions credit banking (see 67 FR 48083, July 23, 2002), Contingency Measures (see 67 FR 35468, May 20, 2002), and SIP revisions dealing with VOC emissions from industrial wastewater (67 FR 41840, June 20, 2002). In this proposed rulemaking the following are considered: the ozone attainment demonstration plan and its associated MVEBs; the transport SIP related materials; the RACM analysis; and the revisions to the 1990 base year inventory, the 15% ROPP, and the Post-1996 ROPP.

When Was the Submittal Addressed in a Public Hearing, and When Was the Submittal Formally Adopted by the State?

LDEQ held a public hearing on the attainment plan and transport SIP on November 26, 2001, and adopted it on December 27, 2001.

2. Modeling Procedures, Input Data, and Results

What Modeling Approach Was Used in the Analyses?

The attainment modeling approach is documented in Louisiana's December 31, 2001, ozone attainment demonstration SIP and information Louisiana previously submitted to EPA on May 10, 2000. EPA's technical analysis discussed later in this document is based on data from this modeling domain. For additional information, see the Technical Support Document (TSD) and the State's submittal.

Besides being able to model ozone and other pollutants in nested horizontal grids, the UAM-V photochemical model (used by LDEQ) can also model individual elevated source plumes within the modeling grid. Gaussian dispersion models are used to grow plumes until the plumes essentially fill grid cells. At these points, the numerical dispersion and advection components of UAM take over to address further downwind dispersion and advection.

The following input data systems and analyses were also used as part of the combined modeling system:

Emissions: UAM–V requires the input of an emissions inventory of gridded, hourly estimates of CO, NO_X, and speciated VOC emissions (speciated based on carbon bond types). The State provided regional and local emission inventories, which were processed through the Emissions Preprocessor System, Version 2.5 (EPS–2.5) to prepare UAM–V emissions data input files.

Louisiana has also made changes to the 1996 emission inventory as documented in the December 31, 2001, submittal. The State submittals describe in detail the procedures used to develop, and then project, the base year emission inventories to the 1997/1999 period and to project emissions to account for growth and control through November 15, 2005.

What High Ozone Periods Were Selected for the Modeling Demonstration?

EPA's Guideline sets forth a recommended procedure for selecting ozone exceedance episodes appropriate for conducting a modeling demonstration. This procedure, in part, considers wind rose analyses based upon the four morning hours of 0700 to 1000 standard time. LDEQ's episode selection for the Baton Rouge 1-hour ozone modeling analysis was based on a review of historical meteorological and air quality data, and application of a procedure for optimizing representation of the key meteorological regimes. The results for 1-hour ozone for Baton Rouge overlap with the Gulf Coast Ozone Study (GCOS) modeling episodes for two of the four GCOS episode periods. The Baton Rouge 1-hour ozone modeling analysis also includes a third episode that is not a part of the GCOS study. The selected episode periods were:

a. August 24–31, 1997 (Sunday–Sunday)
b. September 10–18, 1997 (Wednesday–Thursday)
c. August 1–8, 1999 (Sunday–Sunday)

With respect to the considerations listed above, the three episode periods included:

a. Six 1-hour exceedance days that represent five different types of meteorological regimes.

b. Eleven days with ozone concentrations within 10 ppb of the design value for Baton Rouge (these include several days that represent the three most frequently occurring exceedance meteorological regimes).

c. A range of ozone concentrations among the 1-hour exceedance days from 126 to 143 ppb (with a mean of 131 ppb).

Based on observed ozone concentrations and meteorological conditions, and considering the EPA guidance procedures, LDEQ chose September 13, 1997, August 31, 1997, and August 7, 1999 as the three primary episode days for the Baton Rouge 1-hour ozone modeling analysis.

For the September 1997 episode period, September 13 is a key exceedance day with a maximum ozone concentration near the 1997–1999 design value (126 ppb) and meteorological conditions representative of a key exceedance meteorological regime (the ''continental high'' regime). Wind directions (near the surface and aloft) are primarily from the north.

For the August 1997 episode period, August 31 is the only exceedance day (with a peak of 127 ppb) and the key episode day. Meteorological conditions transition from a key exceedance meteorological regime (the ''gulf high'' regime) to a disturbance regime during this day. Light and variable winds are associated with a high-pressure system that is located over Baton Rouge on the 31st and the local conditions reflect the influence of high pressure.

For the August 1999 episode period, the 7th stands out as the best day for use in the attainment demonstration. This is due to high ozone and, partially, representative meteorological conditions. It also complements the other key days (from the August and September 1997 episode periods) with southerly to southeasterly winds (with this day, the key three episode days combined include northerly, southerly, and light and variable wind components). The maximum ozone concentration (143 ppb) is more than 10 ppb greater than the design values for 1997–1999 and 1999–2001.

What Procedures and Sources of Projection Data Were Used To Project the Emissions to Future Years?

The 2005 future-year basecase episode incorporates the effects of population and industry growth (or, in some cases, decline) as well as national and statewide control measures or programs that should be in place by 2005. The future-year basecase emissions inventory is based on typical summer day emissions, with adjustments for source-specific and episode-specific information. Growth and control factors (for the entire modeling domain) were obtained from the Bureau of Economic Analysis (BEA) and applied based on 2-digit Standard Industrial Code (SIC) for point sources and on the EPS 2.5 default projection factor assignments by source category code for area and mobile sources. Employment was used as the basis for the growth factors for Louisiana. The control factors represent reductions in emissions that should occur as a result of required control requirements. The 2005 basecase emissions inventory also incorporates the expected emission reductions

associated with EPA's NO_X SIP Call and Tier II vehicle standards and fuel sulfur program, as well as emissions reductions associated with the 2007 SIPs for the Houston/Galveston and Beaumont/Port Arthur, Texas, areas. For the Baton Rouge subdomain (Grid D), projection of the emissions to 2005 resulted (approximately) in a one percent increase in NO_X emissions and a corresponding 15 percent decrease in VOC emissions compared to the base year (1997/1999). The offshore area and point sources were projected to 2005 using the information provided by Mineral Management Services (MMS) reflecting expected future activity. The offshore oil platforms were modeled as point sources, and other source categories were modeled as area sources. Details of the above methods are discussed further in the TSD and Louisiana's submittals.

How Did the State Validate the Photochemical Modeling Results?

The LDEQ SIP modeling analysis included the application of the UAM–V modeling system for basecase year episode periods and a future year of 2005. LDEQ selected three basecase episodes for this attainment demonstration modeling. They were the August 24–31, 1997, September 10–18, 1997 and August 1–8, 1999 episodes. Model performance evaluations were conducted for each of these episodes.

Model performance evaluation based upon diagnostic and sensitivity analyses consisted of testing the response of modeled ozone to changes in the various model inputs (*i.e.*, meteorology, emission inventory, and initial & boundary conditions). The model performance evaluation based upon graphical measures consisted of comparing time series of monitored and modeled ozone and ozone precursor concentrations, and comparing modeled ozone concentration contours with monitored ozone data. The model performance evaluation based upon statistical measures consisted of comparing the modeled versus monitored ozone ''Unpaired Peak Accuracy'', ''Normalized Bias'', and ''Gross Error'' with EPA's recommended ranges for acceptable model performance. These evaluation methods and performance measurement analyses were utilized to pick representative ozone episode days for which the model could sufficiently replicate the episode day.

The key simulation days for the Baton Rouge 1-hour ozone attainment demonstration are: September 13, 1997, August 31, 1997, and August 7, 1999. These are exceedance days for which acceptable model performance was achieved. They also represent a range of meteorological conditions and, in particular, a variety of wind directions, which makes them especially suitable, in combination, for use in the attainment demonstration (*i.e.,* a variety of wind directions and thus, potential source-receptor relationships are represented by the key modeling episode days). Further discussion of the choice of these days as the episode days is included in the individual episode discussions below. The 1-hour ozone attainment demonstration analysis presented focuses on these three primary episode days. The analysis of results for these days is supplemented by weight of evidence.

What Were the Ozone Modeling Results for the Base Period and for the Future Attainment Period?

The basecase modeling analysis results indicate that the MM5/UAM–V modeling system can be used to successfully simulate the complex processes leading to high ozone in the Baton Rouge area, although in some cases it is difficult for the model to replicate site-specific details. Key findings related to model performance include:

—Model performance varies by day, and among the modeling episode periods.
—Statistical measures for Grid D are generally within the EPA recommended ranges.
—For the episodes modeled there is no consistent bias toward over- or under estimation on a domain-wide or site-specific basis.
—Gradients in the concentration fields, especially along the coastline, influence sites-specific model performance (especially when using the maximum values in the vicinity of sites to calculate the performance measures).
—Changes to the UAM–V inputs (emissions, meteorological, initial and boundary conditions) produce expected (and moderate) responses.

The simulated high ozone concentrations for the three primary episode days occur in Baton Rouge (September 13, 1997), to the south of Baton Rouge (August 31, 1997), and to the northwest of Baton Rouge (August 7, 1999). From evaluation of meteorological conditions, these three primary episode days appear to represent the three key types of ozone episode meteorological patterns that typically occur in the Baton Rouge area. Because the meteorological conditions for August 7th represent a distinct wind pattern that is representative of ozone episodes, this episode day truly compliments the other two days. These three primary episode days represent the three key types of ozone episode meteorological patterns that typically occur in the Baton Rouge area. Acceptable basecase model performance is achieved that meets EPA statistical guidance for the two 1997 episode days. The August 7, 1999, episode day basecase modeling is slightly outside of EPA statistical guidance parameters, but can still be utilized to evaluate control strategy impacts based upon other evaluation techniques. Specifically, the 1999 episode day has generally good performance for sites within Baton Rouge and to the north of the urban area, but the simulated ozone profiles are flatter than observed at some of the outlying monitoring sites. The normalized bias value for August 7, 1999 is -16.8% (Grid D), which is just outside the preferred range of $+/-15\%$. The Gross Tete monitoring site is one of the significant reasons the bias is off, and if this location were not included the bias would be within desired parameters. For further information concerning the Gross Tete monitoring site see the TSD.

Do the Modeling Results Demonstrate Attainment of the Ozone Standard?

The modeling results for the Baton Rouge 5-parish nonattainment area were 123.4, 124.0, and 121.3 ppb for the three episode days. The maximum simulated ozone concentrations for Grid D (a rectangular area 112 km $\times$ 148 km that includes the Baton Rouge nonattainment area) were 123.4, 124.0, and 127.4 ppb. The 127.4 ppb peak is predicted to occur outside of the Baton Rouge nonattainment area for the 1999 episode day. The two 1997 episode days demonstrated attainment utilizing the deterministic test. Therefore, Louisiana has demonstrated with these two episodes that the Baton Rouge nonattainment area will attain the standard by November 15, 2005. Since the 1999 episode does not meet the deterministic test because it predicts a level slightly above the standard occurring in an attainment parish outside of the Baton Rouge nonattainment area, to ensure that the chosen control strategy for the Baton Rouge nonattainment area will not cause an exceedance of the standard to occur in an attainment parish, Louisiana supplemented the attainment demonstration with weight-of-evidence. With weight-of-evidence for the 1999 episode, these modeling results indicate that the Baton Rouge nonattainment area will attain (and the surrounding area will continue to attain) the ozone

standard by November 15, 2005, with the proposed rules control scenario and other reductions occurring within the domain.

What Weight-of-Evidence Analyses and Determinations Are Used In This SIP?

The modeling by itself does demonstrate attainment in the Baton Rouge nonattainment area, but the modeling for the 1999 episode day by itself does not conclusively demonstrate attainment in Grid D, an area outside the nonattainment area but downwind of it and within the State and part of the modeling domain. The modeling for both of the 1997 episode days do show attainment within Grid D. The results for the 1999 episode day, however, are close enough to warrant the consideration of weight of evidence arguments that support the modeling demonstration of attainment. EPA's guidance on the use of modeled results to demonstrate attainment of the ozone NAAQS (June, 1996) allows for the use of alternative analyses as weight-of-evidence. The alternative analyses should provide compelling evidence that a specific control strategy, even if it is not capable of demonstrating modeled attainment utilizing modeling, is nonetheless expected to achieve monitored attainment by the attainment date. In this case, the modeling does demonstrate attainment in the Baton Rouge nonattainment area and Grid D for the two 1997 episodes, but weight of evidence provides additional support that is needed to determine that the attainment parishes within Grid D will stay in attainment for all three episode days (including the 1999 episode day). The EPA's 1999 guidance document entitled ''Guidance for Improving Weight of Evidence Through Identification of Additional Emission Reductions, Not Modeled'' addressed additional weight-of-evidence approaches, one of which considers methods that relate modeled ozone concentrations to monitored design values for a particular area.

LDEQ's weight-of-evidence determination includes:

- Consideration of certain factors that are also the benchmarks for the statistical determination approach.
- Consideration of uncertainties associated with the modeling system.
- Application of relative-reduction procedures for 1-hour ozone on a site-specific basis (attainment and screening tests).
- Assessment of simulation results relative to 8-hour ozone.
- Application of relative-reduction procedures for 1-hour ozone on a domain-wide basis.
- Analysis of observed and simulated ozone trends.

Using the statistical approach included in the 1996 guidance, Benchmark Test #1, which limits the number of exceedances within each subregion of the modeling domain according to the severity of the modeled primary episode days, is not met. One of the primary episode days (August 7, 1999) is characterized as severe, which is when the expected frequency of occurrence of the meteorological conditions associated with the episode is less than 2 times per year. The characterization of the episode determines the number of exceedances allowed using this method. The Grid D domain was divided into subregions, with each subregion containing 64 2-km grid cells, for this analysis. The number of allowable exceedances in each subregion is zero; for one subregion, one exceedance is simulated.

Benchmark Test #2, which limits the extent to which the simulated concentrations for the severe primary episode days may exceed 124 ppb, is met. For the August 7, 1999 episode day, the maximum simulated value (Grid D) of 127.4 ppb is within the range of the estimated allowed maximum values of 124 to 129 ppb.

Benchmark Test #3, provides that, for a composite of all primary episode days, the number of grid cell hours with simulated ozone concentrations greater than 124 ppb should be reduced by at least 80 percent. The value of this parameter is reduced by 97.6 percent. This test is passed by a significant margin.

The results from application of the statistical approach did not pass Benchmark Test #1. However, components of the statistical approach analyses do show improvements and thus this data can be used as one of the weight-of-evidence components.

Additional weight of evidence was also considered. Uncertainties associated with modeling system were considered as part of the weight of evidence. Overestimation of the Baton Rouge nonattainment area domain-wide (Grid D) 1-hour maximum ozone concentration for the three episode days adds to the weight-of evidence that the results demonstrate attainment, since both the deterministic and (to a lesser extent) statistical methods for the 1-hour ozone attainment demonstration emphasize the reduction of the simulated peak concentration. The good model performance achieved for the September 13, 1997, and August 31, 1997, primary episode days adds to the credibility of the attainment test results for these two days, which in both cases clearly indicate that attainment has been demonstrated (using both the deterministic and statistical methods). Poorer model performance for the August 7, 1999 episode supports use of greater caution in interpreting the results for this day than those for the other episode days. Additional weight-of-evidence is used to determine that the episode day demonstrates attainment.

Despite the differences in simulated and observed ozone concentrations and model performance among the primary episode days, the response of the modeling system to the emission reductions is consistent among the simulation days, both on a percentage and absolute basis. The peak concentration for the attainment strategy simulation is reduced from that for the future year basecase simulation by approximately 7.5 percent for the September 13, 1997 and August 7, 1999 simulation days and by approximately 10 percent for the August 31, 1997 simulation day. The number of grid cell hours greater than 124 ppb and the value of the related 1-hour exceedance exposure metrics are about 95 to 100 percent lower for the attainment strategy simulation. For the three primary episode days, separately and combined, the simulation results indicate emission reductions that comprise the attainment strategy are sufficient to bring the Baton Rouge area into attainment for three different but representative sets of meteorological conditions.

Application of relative-reduction procedures for 1-hour ozone on a site-specific basis showed that for the simulated attainment strategy, the future-year estimated design value (EDV) for all sites is estimated to be less than 124 ppb (less than 120ppb) when the 1997–1999 design value is used for the calculation. Since the episodes modeled are from 1997 and 1999, the 1997–1999 design values is considered to be the representative design values. LDEQ also performed analyses for two other design values periods as additional support. For the 1999–2001 design values the future-year EDVs were all less than 120 ppb. When the 1998–2000 design values are used for the calculation, the EDV for one site (LSU) is greater than 124 ppb and the EDV is less than 120 ppb for all the other sites. The EDV for the LSU site is 126.4 ppb. In summary, LDEQ utilized three different periods (1997–1999, 1998–2000, 1999–2001) for the starting design value of the Baton Rouge area. The relative-reduction-factor (RRF) analysis yielded EDVs below 120 ppb for all three starting design values with the one exception. This exception was for one

monitor (LSU) and only occurred when one of the three latest design values were used. The application of the site-specific relative-reduction method provides additional weight-of-evidence that the emission reductions associated with the attainment strategy will result in attainment of the 1-hour ozone standard by November 15, 2005. This method complements the traditional 1-hour attainment demonstration methods since the modeling results are used in a relative sense and some of the uncertainty associated with traditional 1-hour modeling is therefore avoided.

The results of the site-specific relative-reduction attainment test for 8-hour ozone shows that the attainment-strategy emission reduction measures are also effective in reducing the 8-hour EDVs for all sites. For example, use of the 1997–1999 design values as the basis for the EDV calculation gives a reduction in the average (over all sites) 8-hour design value from 88.1 to 81.4 ppb. The number of sites with design values greater than 84 ppb is reduced from ten (based on the 1997–1999 design value) to four. While the details and schedule for implementation of 8-hour ozone standard and the associated attainment demonstration procedures are not fully known at this time, the modeling results indicate that the emission reductions associated with the 1-hour attainment strategy will also significantly contribute to attainment of an 8-hour ozone standard for Baton Rouge.

Application of relative-reduction procedures for 1-hour ozone on a domain-wide basis, gives an estimated design value for the Baton Rouge nonattainment area of 121.6 ppb. This additional weight-of-evidence test indicates that the attainment strategy will be sufficient to bring the area into attainment by November 15, 2005, and that further emission reductions are not required. Application of the domain-wide relative-reduction procedures provides additional strong support for the attainment strategy.

3. Emission Control Strategies

What Emission Control Strategies Were Considered in the Attainment Demonstration?

Louisiana's emission control strategy relies on emission control requirements through 2005, including the impacts of the State's ROPPs for the Baton Rouge area, federal emission controls expected to be implemented before or by 2005, and the State's regional NO_X emission limit.

Louisiana has recently finalized regional NO_X emission control regulations to cover this NO_X limit. EPA has recently proposed approval of these regulations as meeting the RACT requirements of the Act. See 67 FR 48095, July 23, 2002. It should be noted that Louisiana has adopted NO_X regulations for the Baton Rouge area and is no longer seeking an exemption from NO_X RACT, NO_X NSR, or NO_X general conformity requirements. The modeling used to support the attainment demonstration does consider the impacts of NO_X emission reductions resulting from NO_X RACT implementation in the Baton Rouge area. EPA proposed to rescind the NO_X exemptions for the Baton Rouge area under separate rulemaking actions. See 67 FR 30638, May 7, 2002.

The emission control strategy also considers the emission impacts of the following control measures: VOC emission reductions from implementation of RACT on various sources (see the discussion of the contents of Louisiana's December 31, 2001, submittal above); an improved vehicle I/M program; EPA's rulemakings for the National Low Emission Vehicle Program and the Tier 2 motor vehicle emissions standards and low sulfur gasoline program; and a TCM.

The State included a TCM in its SIP as a control strategy for attainment of the 1-hour ozone NAAQS. The TCM is an Intelligent Transportation System (ITS) initiative which is locally referred to as the Advanced Transportation Management System (ATMS) facility and is described in detail in Chapter 4 and Appendix F of the State's SIP submittal. The SIP includes information about the project's description, implementation date, and emission reductions. This TCM will be incorporated by reference into the Code of Federal Regulations, if EPA takes final action to approve the attainment demonstration.

4. Motor Vehicle Emission Budgets

What Is a MVEB and Why Is It Important?

The MVEB is the level of total allowable on-road emissions established by a control strategy implementation plan or maintenance plan. In this case, the MVEB establishes the maximum level of on-road emissions that can be produced in 2005, when considered with emissions from all other sources, which demonstrate attainment of the ozone NAAQS. It is important because the MVEB is used to determine the conformity of transportation plans and programs to the SIP, as described by section 176(c)(2)(A) of the Act.

What Are the MVEBs Established by This Plan and Proposed for Approval by This Action?

On December 31, 2001, Louisiana submitted motor vehicle emissions budgets for the 2005 attainment year for the Baton Rouge area in their SIP. The attainment year MVEBs established by this plan that the EPA is proposing to approve are 15.48 tons per day for VOC and 34.26 tons per day for NO_X for the Baton Rouge area. These budgets were posted on the EPA website for public comment. No comments were received and EPA has determined that the emissions budgets meet the adequacy requirements. We notified the State by letter of our determination on July 5, 2002, and notice of our determination was published on July 17, 2002, (67 FR 46970) and is effective 15 days after that publication. In addition, we find the MVEBs consistent with all pertinent SIP requirements, and the MVEBs are proposed for approval as limited by the discussion below.

What Is the State's Commitment To Revise the MVEBs With MOBILE6?

All States whose attainment demonstration includes the effects of the Tier 2/sulfur program have committed to revise and resubmit their MVEBs after we release MOBILE6. On December 31, 2001, the State submitted an enforceable commitment to perform new mobile source modeling for the Baton Rouge area, using MOBILE6, within 24 months of the model's official release. In addition, the enforceable commitment includes a provision stating that if a transportation conformity analysis is to be performed between 12 months and 24 months after the release of MOBILE6, transportation conformity will not be determined until the State submits an MVEB which is developed using MOBILE6 and which we find adequate. LDEQ informed the Capital Region Planning Commission (CRPC) and the Louisiana Department of Transportation and Development of these commitments, and that conformity cannot be determined during the second year until the MOBILE6-based budgets are submitted to EPA and found adequate.

We are proposing that if we finalize this action, the current MOBILE5-based budgets will only be effective for conformity until revised motor vehicle emissions budgets are submitted and found adequate. We are proposing to limit the duration of our approval in this manner because we are only proposing to approve the attainment demonstration and the budgets because the State has committed to revise them

using MOBILE6. Therefore, if we confirm that the revised budgets are adequate, they will be more appropriate than the budgets we are proposing to approve today. Therefore we are proposing to approve the motor vehicle emission budgets and the enforceable commitment to submit revised budgets using MOBILE6 within 24 months after MOBILE6's release.

If future changes to the budgets raise issues about the sufficiency of the attainment demonstration, we will work with the State. If the revised budgets show that motor vehicle emissions are lower than the budgets we approve, a reassessment of the attainment demonstration's analysis will be necessary.

This action does not propose any change to the existing transportation conformity rule or to the way it is normally implemented with respect to other submitted and approved SIPs, which do not contain commitments to revise the budget.

If the State fails to meet its commitment to submit revised budgets using MOBILE6, we could make a finding of failure to implement the SIP, which would start a sanctions clock under section 179 of the Act.

What Is the Applicable MVEB To Use for Conformity Analysis After 2005?

When evaluating transportation plans and programs, emissions in years after 2005 must be less than the 2005 attainment MVEBs being proposed for approval here.

We are proposing to approve the attainment MVEBs, pursuant to the State's commitments related to MOBILE6, only until revised MVEBs are submitted and we have found them adequate for transportation conformity purposes.

5. RACM Analysis and Determination of Availability

Section 172(c)(1) of the Act requires SIPs to provide for the implementation of all RACM as expeditiously as practicable and for attainment of the standard. EPA has previously provided guidance interpreting the RACM requirements of 172(c)(1) in the General Preamble. *See* 57 FR 13498, 13560 (April 16, 1992). In the General Preamble, EPA indicated its interpretation of section 172(c)(1), under the 1990 Amendments, as imposing a duty on States to consider all available control measures and to adopt and implement such measures as are reasonably available for implementation in the particular nonattainment area. EPA also retained its pre-1990 interpretation of the RACM provisions, stating that we would not consider it reasonable to require implementation of measures that might in fact be available for implementation in the nonattainment area, but could not be implemented on a schedule that would advance the date for attainment in the area. EPA indicated that a State could reject certain measures as not reasonably available for various reasons related to local conditions. A State could include area-specific reasons for rejecting a measure as RACM such as, but not limited to, the rejected measure would not advance the attainment date, or would not be technologically or economically feasible for the area.

The EPA also issued a recent memorandum reaffirming its position on this topic, ''Guidance on the Reasonably Available Control Measures (RACM) Requirement and Attainment Demonstration Submissions for Ozone Nonattainment Areas.'' John S. Seitz, Director, Office of Air Quality Planning and Standards, dated November 30, 1999. In this memoranda, we state that in order to determine whether a state has adopted all RACM necessary for attainment as expeditiously as practicable, the state will need to provide a justification as to why measures within the arena of potentially reasonable measures have not been adopted. The justification would need to support that a measure was not reasonably available for that area and could be based on technological or economic grounds, or a showing that it would not advance the attainment date.

EPA has reviewed the RACM analysis provided in LDEQ's SIP submittal for the Baton Rouge nonattainment area and believes that the State has included sufficient documentation concerning the rejection of certain available measures as RACM for the specific Baton Rouge area.

LDEQ conducted a mobile source analysis that consisted of a broad range of TCMs. As part of this analysis, LDEQ relied on an in-depth TCM evaluation study performed for the Baton Rouge area. LDEQ concluded that, relative to the total NO_X reductions required for attainment of the 1-hour ozone NAAQS, additional TCMs that could potentially be implemented in the Baton Rouge area were only a small percentage (approximately 1%) of the emissions reductions needed for attainment and did not advance the attainment date. For more information regarding LDEQ's mobile source RACM analysis, including a description of the basic methodology employed to analyze TCM RACM, and a copy of the TCM evaluation study, please refer to the RACM TSD for this proposed action.

An additional mobile source measure, the Vehicle Inspection and Maintenance (I/M) program has been implemented in the area. On-Board Diagnostics testing will be implemented in 2002. There is a state statute prohibiting the expansion of the I/M program beyond the five-parish area [La. R.S. 30:2054.B(8)(a)]. The 2002 Louisiana legislative session is a ''fiscal only'' session. The next legislative session where expansion of the I/M program area could be considered would be the Regular Legislative Session of 2003. LDEQ concludes that the State has applied RACM for the I/M program because legislative authority is needed for any I/M program expansion, and that opportunity is not available until 2003, and because the fleet in the Baton Rouge area is small (approximately 400,000 subject to the I/M program), LDEQ concludes that the state has applied RACM for the I/M program, in that expansion of the I/M program could not be accomplished so as to advance the attainment date for the Baton Rouge nonattainment area. LDEQ also considered off-road mobile RACM. In view of local feasibility and the economic impact of use restrictions, LDEQ has determined that further off-road measures are not RACM.

LDEQ conducted a stationary source RACM analysis. A VOC major source analysis concluded that a 30% ''across the board'' reduction in VOCs yielded less than 1 ppb decrease in the ozone peak in all three episodes modeled in the attainment demonstration. Furthermore, Louisiana has implemented RACT on all major stationary sources of VOC in the Baton Rouge area. LDEQ concluded that further VOC reductions at this time are deemed as not cost effective and would not advance the attainment date for the Baton Rouge area.

LDEQ conducted a NO_X major source RACM analysis. Chapter 4, Section 4.3 of the SIP submittal contains the proposed Baton Rouge NO_X control strategy. In the Baton Rouge area the plan will reduce NO_X by approximately 77 tons per day. LDEQ has adopted rule revisions, which are the subject of a separate EPA rulemaking (67 FR 48095, July 23, 2002), to control emissions from point sources of NO_X in the Baton Rouge area. (LAC 33:III, Chapter 22, ''Control of Emissions of Nitrogen Oxides''). RACT is defined by EPA as the lowest achievable emission rate considering technical and economic feasibility. Based on the revised rule, LDEQ will be controlling emissions beyond levels that EPA has previously approved as RACT for such sources. Therefore, LDEQ concluded that the

Baton Rouge area NO_X control plan meets RACM for major NO_X sources.

Area sources were also evaluated by LDEQ. The evaluation identified 17 tons per day of ''potentially controllable'' VOC emissions reductions but this estimate was considered to be an overestimation in the Baton Rouge area because it did not take into account specific federal and state rules and regulations that are in effect to control such emissions. Based on its analysis that these categories are already controlled in the Baton Rouge area, LDEQ concluded that the amount of reduction available from additional controls on area sources were minimal, that there are little or no remaining potentially available emissions reductions, and that additional controls would not advance the attainment date for the Baton Rouge area.

LDEQ also noted that NO_X area sources were smaller and more numerous than the VOC area sources. Therefore, LDEQ concluded that control of NO_X area sources would be expensive and would require an intensive effort. As a result, controls on these categories of sources was not considered reasonably available.

Based on these analyses, LDEQ concluded that the additional set of evaluated measures are not reasonably available for the Baton Rouge area, because: (a) Some would require an intensive and costly effort for numerous small area sources, (b) the measures would not produce emission reductions sufficient to advance the attainment date in the Baton Rouge area and, therefore, should not be considered RACM for the Baton Rouge area. Please refer to the RACM TSD and LDEQ's RACM analysis for further information.

6. Revisions to the 15% ROPP, for the Control of VOC Emissions, the 1990 Base Year Emissions Inventory, and the Post-1996 ROPP

Under the 1990 Clean Air Act Amendments (CAAA), States have the responsibility to inventory emissions contributing to NAAQS nonattainment, to track these emissions over time, and to ensure that control strategies are being implemented that reduce emissions and move areas towards attainment. The CAAA require ozone nonattainment areas designated as moderate, serious, severe, and extreme to submit a plan within three years of 1990 to reduce VOC emissions by 15 percent within six years after 1990. The baseline level of emissions, from which the 15 percent reduction is calculated, is determined by adjusting the base year inventory to exclude biogenic emissions and to exclude certain emission reductions not creditable towards the 15 percent. The 1990 base year emissions inventory is the primary inventory from which the periodic inventory, the Reasonable Further Progress projection inventory, and the modeling inventory are derived.[2] The base year inventory plays an important role in modeling demonstrations for areas classified as moderate and above.

The air quality planning requirements for marginal to extreme ozone nonattainment areas are set out in section 182(a)–(e) of Title I of the CAAA. EPA has issued a General Preamble describing EPA's preliminary views on how EPA intends to review SIP revisions submitted under Title I, including requirements for the preparation of the 1990 base year inventory (see 57 FR 13502; April 16, 1992, and 57 FR 18070; April 28, 1992). Because EPA is describing its interpretations here only in broad terms, the reader should refer to the General Preamble (57 FR 18070, Appendix B, April 28, 1992) for a more detailed discussion of the interpretations of Title I advanced in today's action and the supporting rationale.

States containing ozone nonattainment areas classified as marginal to extreme are required under section 182(a)(1) of the 1990 CAAA to submit a final, comprehensive, accurate, and current inventory of actual ozone season, weekday emissions from all sources by November 15, 1992. This inventory is for calendar year 1990 and is denoted as the base year inventory. It includes both anthropogenic and biogenic sources of VOC, NO_X, and carbon monoxide (CO).

The inventory is to address actual VOC, NO_X, and CO emissions for the area during a peak ozone season, which is generally comprised of the summer months. All stationary point and area sources, as well as highway mobile sources within the nonattainment area, are to be included in the compilation. Available guidance for preparing emission inventories is provided in the General Preamble (57 FR 13498, April 16, 1992). EPA approved the Louisiana 1990 Base Year Emissions Inventories on March 15, 1995 (60 FR 13911).

Section 182(c)(2)(B) of the Act requires each State having one or more ozone nonattainment areas classified as serious or worse to develop a plan by November 15, 1994, that provides for additional actual VOC reductions of at least three percent per year, averaged over each consecutive three year period, beginning six years after enactment of the Act, until such time as these areas have attained the NAAQS for ozone. These plans are referred to hereafter as Post-1996 ROPP. EPA approved the revisions to the Post-1996 ROPP for the Baton Rouge area on July 2, 1999 (64 FR 35930).

The current revisions to the 1990 Base Year Emissions Inventory, the 15% Rate-of-Progress Plan, and the 9% Rate-of-Progress Plan were submitted as part of the December 31, 2001, Attainment Plan/Transport SIP. Specifically, they were submitted as part of the substitute contingency measures. The substitute contingency measures are the subject of a separate EPA rulemaking action (see 67 FR 35468, May 20, 2002).

The current revisions consist of emission reductions resulting from the installation of VOC emission controls at the Trunkline Gas Company—Patterson Compressor Station (hereinafter referred to as Trunkline or Trunkline facility) in St. Mary Parish. The Trunkline facility is located approximately 40 kilometers from the Baton Rouge ozone nonattainment area. In 1997, EPA issued a policy allowing 1-hour ozone nonattainment areas to take credit in their Post-1996 ROPP[3] for emission reductions obtained from sources outside the designated nonattainment area, provided the sources are no farther away than 100 km (for VOC sources) or 200 km (for NO_X sources) away from the nonattainment area.[4]

The Trunkline Gas Company had not accounted for 13.4 tons per day of VOC emissions. As a result, the VOC emissions from this facility had not been included in the point source emissions inventory for 1990. Emissions reported in a corrected 1992 annual emissions inventory submitted to LDEQ June 6, 1997, are the best estimate of the source's 1990 base year emissions. These emissions were added back to the 1990 base year emissions inventory. The revised 1990 VOC base year inventory that included these Trunkline emissions would result in a 204.6 tons per day revised 1990 base year inventory.

[2] Further information on these inventories and their purpose can be found in the ''Emission Inventory Requirements for Ozone State Implementation Plans,'' U.S. Environmental Protection Agency, Office of Air Quality Planning and Standards, Research Triangle Park, North Carolina, March 1991.

[3] EPA has historically allowed a surplus emission reduction in ROPP to be credited towards meeting the section 172 and section 182 requirements. EPA's rationale is that not allowing excess emission reductions to be used as contingency measures discourages areas from reducing emissions ''as expeditiously as practicable'' and is, therefore, inconsistent with section 172 of the CAA.

[4] EPA memorandum, ''Guidance for Implementing the 1-Hour Ozone and Pre-Existing PM_{10} NAAQS,'' from Richard D. Wilson, Acting Assistant Administrator for Air and Radiation, December 23, 1997.

An additional 2.0 tons per day of emission reductions required were identified in the 15% ROPP revisions. The additional 2.0 tons per day were offset by 1.4 tons per day ''surplus'' 9% ROPP reduction from the Trunkline permit plus 0.6 tons per day of point source reductions (163 tons per year or 0.45 tons per day of VOCs from the Dow Chemical permit and 56 tons per year or 0.15 tons per day of VOCs from the BASF Corporation permit).

There was also an additional 1.2 tons per day of reductions required for the 9% ROPP identified in the revisions. These were taken from the 13.0 tons per day Trunkline emissions reductions that were netted from the post-90 emissions growth.

See Table 1 below for a listing of the revisions to the emissions inventory. Table 2 below contains the revisions to the ROPPs. Table 3 below itemizes the Trunkline emissions reductions. For further detail on the calculation of these emissions inventories please see the related prior rulemaking actions referenced above.

TABLE 1.—1990 EMISSIONS INVENTORY

[Tons per day]

Trunkline 1990 Base Year Emissions Inventory	13.4
1990 Adjusted VOC Base Year Inventory	[1]191.2
Revised 1990 Adjusted VOC Base Year Inventory	[2]204.6

[1] From the approved 9% ROPP.
[2] Includes Trunkline permit emissions.

TABLE 2.—REVISIONS TO ROPPS

[Tons per day]

Revised 3% Contingency Requirement	[1]6.1
Additional 9% ROPP Reductions Required	[2]1.2
Additional 15% ROPP Reductions Required	[3]2.0

[1] Three percent requirement times the total emissions inventory or 0.03 × 204.6 tons per day.
[2] Nine percent requirement times the Trunkline 1990 base year emissions inventory or 0.09 × 13.4 tons per day.
[3] Fifteen percent requirement times the Trunkline 1990 base year emissions inventory or 0.15 × 13.4 tons per day.
a—Sources of additional 15% ROPP reductions is from approved 9% ROPP ''surplus'' (1.4 tons per day), plus point source reductions of 163 tons per year or 0.45 tons per day of VOCs from Dow Chemical permit and 56 tons per year or 0.15 tons per day of VOCs from the BASF Corporation permit, totaling 2.0 tons per day.

TABLE 3.—TRUNKLINE EMISSIONS REDUCTIONS

[Tons per day]

Trunkline Emissions Reductions	[1]13.0
3% Contingency Requirement	[2]6.1
Additional 9% ROPP Requirement	[3]1.2
''Surplus'' 9% ROPP Reductions from Trunkline	5.7

[1] Trunkline 1990 base year emissions inventory of 13.4 tons per day minus 0.4 tons per day of new allowables.

B. Environmental Protection Agency Review of the Submittals

1. Adequacy of the State's Demonstration of Attainment

Did the State Adequately Document the Techniques and Data Used To Derive the Modeling Input Data and Modeling Results?

The submittals from the State adequately documented the techniques and data used to derive the modeling input data. The submittals adequately summarized the modeling outputs and the conclusions drawn from these model outputs. The submittals adequately documented the State's weight-of-evidence determinations and the bases for concluding that these determinations adequately support the attainment demonstration.

Did the Modeling Procedures and Input Data Used Comply With the Environmental Protection Agency Guidelines and Clean Air Act Requirements?

Yes. The modeling procedures, and input data (including evaluation of the emissions inventory input and procedures), validation of the modeling results, and selection of episode days, meet the CAA requirements and are consistent with EPA's guidance.

Does the Weight-of-Evidence Determination Support the Attainment Demonstration?

Yes, the weight-of-evidence determination, when viewed in aggregate with the modeling, shows attainment of the standard and thus EPA is proposing approval of the attainment demonstration.

2. Adequacy of the Emission Control Strategies

Do the Emission Control Strategies Meet the Requirements of the Clean Air Act?

The selected emission control strategy, based upon modeling and the weight-of-evidence techniques, plus additional information regarding the effect of southeast Texas upon Baton Rouge, demonstrates attainment of the 1-hour ozone standard.

3. Adequacy of the Request for Extension of the Attainment Date

The policy for the extension of an ozone attainment date is discussed above. How the State addressed it is discussed here.

a. Identification of the Area as a Downwind Area Affected by Ozone Transport

The State submitted its Transport Demonstration on May 10, 2000, and provided supplemental information in the December 31, 2001, package. The State provided transport demonstration modeling and meteorological analyses. LDEQ applied the procedures used in the Ozone Transport Assessment Group (OTAG) modeling for evaluating ''significant contribution'' for the NO_X SIP Call. This procedure has been used for other areas' transport demonstrations under the attainmentment date extension policy. The OTAG procedures appeared to equate a ''significant contribution'' with a ''Zero-out'' modeling analysis of the upwind area's emissions resulting in a 2 ppb or greater impact to the downwind area. LDEQ used Urban Airshed Model V (UAM–V) to model an episode representing the most frequently occurring exceedance meteorological regime (*i.e.*, the August 17–19, 1993 ozone episode) to quantify the contribution from southeast Texas (Houston/Galveston and Beaumont/Port Arthur areas). LDEQ ''Zero-out'' modeling analysis indicated a ''significant contribution,'' since the modeling results showed a contribution of approximately 2 to 6 ppb from the Houston/Galveston nonattainment area to the five-parish Baton Rouge nonattainment area.

The OTAG procedures for evaluating ''significant contribution'' also include a demonstration that the impact is large and/or frequent. To address the issues of the frequency of transport, LDEQ presented the analysis of meteorological and air quality data. LDEQ used the Classification and Regression Tree (CART) analysis technique to classify and analyze meteorological and air quality data for a five-year period (1996–2000). The results indicated that 7 percent of the Baton Rouge exceedance days (*i.e.*, 2 out of 28 exceedance days) were potentially associated with transport of ozone and/or precursor pollutants from the Houston area. For more information about the transport demonstration modeling, please refer to the Modeling TSD prepared for this document.

In the information submitted in 2000, the modeling showed that emissions from the Houston/Galveston area of

southeast Texas resulted in impacts in a 1993 modeling episode. In the December 31, 2001 package, the air flow into Baton Rouge was not particularly conducive to showing transport from southeast Texas for the episodes modeled, but LDEQ submitted a model run that still showed a ''significant contribution'' of emissions from southeast Texas (Houston/Galveston and Beaumont/Port Arthur areas). We have reviewed LDEQ's submittals and are proposing to agree that LDEQ has demonstrated that on some occasions, emissions from the Houston/Galveston and Beaumont/Port Arthur areas have significant impacts on exceedances in the Baton Rouge area. This transported pollution happens frequently enough to adversely affect the area's ability to attain by its current attainment date, since the area is only allowed 3 exceedances in a three-year period. Thus for Baton Rouge to attain, controls in both the Houston/Galveston area and the Beaumont/Port Arthur area are necessary.

In conclusion, EPA is proposing that Louisiana has demonstrated that during some Baton Rouge area exceedances, ozone levels are influenced by emissions from the Houston/Galveston and Beaumont/Port Arthur areas, and that the Houston/Galveston area and Beaumont/Port Arthur area emissions affect the Baton Rouge area's ability to meet attainment of the 1-hour ozone standard by November 15, 1999. Therefore, EPA proposes to find that the State's demonstration of ozone transport is consistent with the criteria in EPA's attainment date extension policy and meets the technical requirements established by the NO_X SIP Call for a ''significant contribution''. Please refer to the TSD for more details.

b. Submittal of an Approvable Attainment Demonstration

Based on our review of the attainment demonstration submitted by the State in December 31, 2001, EPA believes Louisiana has submitted an approvable attainment demonstration. As a part of this action, EPA is proposing to approve Louisiana's ground-level one-hour ozone attainment demonstration SIP for the Baton Rouge area. In addition, the State has adopted all of the emission control measures relied upon in the attainment demonstration but for one rule. On April 8, 2002, the Governor of Louisiana submitted rule revisions to LAC:33:III, Chapter 22, ''Control of Emissions of Nitrogen Oxides,'' (AQ224), as a revision to the Louisiana SIP for lean burn engines in the BR ozone nonattainment area and requested that EPA act on the rule revision concerning NO_X RACT for lean burn engines through ''parallel processing.'' *See* 40 CFR Part 51, Appendix V for more information on ''parallel processing'' process. EPA has agreed to parallel process this rule revision and will complete its rulemaking on this revision before taking final action on the attainment demonstration or an attainment date extension. EPA is proposing to extend the attainment date for the Baton Rouge area, only if EPA takes final action to approve the attainment demonstration and any other required local measures.

LDEQ has requested that the EPA grant an extension of the attainment date for the 1-hour ozone NAAQS for the Baton Rouge area to November 15, 2005. In keeping with EPA's attainment date extension policy, the November 15, 2005 date is well before the Houston/Galveston attainment date of November 15, 2007. The Baton Rouge attainment demonstration relies heavily on NO_X controls to be implemented as expeditiously as possible, but no later than May 1, 2005. It is expected that the Houston/Galveston area and the Beaumont/Port Arthur area will have achieved sufficient emissions reductions to lower the background concentration of ozone and ozone precursors in the Baton Rouge area. LDEQ feels that with a combination of local and federal controls, and with the expected emissions reductions from the upwind area, the Baton Rouge nonattainment area can attain by November 15, 2005. Thus, EPA believes that the November 15, 2005, attainment date is as ''expeditiously as practicable'' for the Baton Rouge area.

c. Adoption of All Applicable Local Measures Required Under the Area's Current Ozone Classification

As noted above, Louisiana has completed the adoption of all local measures required by the Act for the area's current classification with the exception of NO_X RACT, and has submitted these revisions to EPA for approval. EPA is proposing to extend the attainment date for the Baton Rouge area, only if EPA takes final action to approve all applicable required local measures.

d. Implementation of All Adopted Measures as Expeditiously as Practicable and No Later Than the Time Upwind Controls Are Expected

In anticipation of the implementation of certain upwind controls in the Houston/Galveston and Beaumont/Port Arthur areas, Louisiana has adopted State regional NO_X controls requiring implementation as expeditiously as practicable, but no later than May 1, 2005. As a part of the Attainment Demonstration/Transport SIP submitted by Louisiana, the State has committed to implementing all adopted measures as expeditiously as practicable and no later than the time upwind controls are expected. For more information please refer to the Modeling TSD and to the State's Control Strategy (Chapter 4 of the SIP). Therefore, EPA proposes that the State's sumbittals are consistent with this criterion of the extension policy.

EPA concludes that, at the present time, the State has addressed the conditions for an attainment date extension. EPA believes that Louisiana has met the criteria for obtaining an attainment date extension under the conditions contained in EPA's July 16, 1998, attainment date extension policy, provided that EPA approves the attainment demonstration and any local measures which require EPA approval to qualify for the extension. Therefore, EPA proposes to extend the attainment date for the Baton Rouge area to November 15, 2005.

To the extent that comments received on EPA's March 25, 1999 document, ''Extension of Attainment Dates for Downwind Transport Areas,'' 64 FR 14441, are applicable to this rulemaking, EPA will address and respond to these comments in its final rulemaking action.

4. Determination of RACM Availability

EPA has reviewed LDEQ's SIP submittal and LDEQ's analysis to evaluate emission levels of NO_X and VOC and their relationships to the application of current and anticipated control measures expected to be implemented in the five-parish Baton Rouge serious nonattainment area.

Based on this review, EPA proposes to conclude that the additional set of evaluated measures are not reasonably available for the Baton Rouge area, because: (a) The additional set of measures would require an intensive and costly effort for numerous small area sources, and (b) the measures would not produce emission reductions sufficient to advance the attainment date in the Baton Rouge area and, therefore, should not be considered RACM for the specific area.

EPA reached this conclusion primarily because the reductions expected to be achieved by the potential RACM measures are very small. These potential reductions are far less than the emissions reductions needed to advance the date for attainment in the Baton Rouge area. LDEQ has concluded from its modeling analysis, and we agree, that NO_X emission reductions in Baton

Rouge are the most effective way to reduce ozone in the Baton Rouge area. VOC reductions are not as effective as NO_X in reducing ozone, and further local VOC reductions in this area would not produce significant ozone reductions in the Baton Rouge area. EPA agrees with LDEQ that VOC reductions would not advance the attainment date and are not as effective in reducing ozone in the Baton Rouge area, as demonstrated in the modeling.

Furthermore, as shown in the modeled attainment demonstration, the Baton Rouge area also relies upon emissions reductions from outside of the nonattainment area and from federal rules with implementation dates prior to 2005. There are no other reasonably available control measures that could advance the attainment date for the Baton Rouge area prior to full implementation, by 2005, of all measures in Louisiana's SIP control strategy for the Baton Rouge area.

Although EPA encourages areas to implement available RACM measures as potentially cost-effective methods to achieve emissions reductions in the short term, EPA does not believe that section 172(c)(1) requires implementation of potential RACM measures that either require costly implementation efforts or produce relatively small emissions reductions that will not be sufficient to allow the Baton Rouge area to achieve attainment in advance of full implementation of all other required measures. Therefore, EPA proposes to conclude that the additional set of evaluated measures are not reasonably available for the Baton Rouge area and should not be considered RACM for the specific area.

5. Adequacy of ROPPs and the 1990 Base Year Inventory

We are proposing approval of the revised 1990 Base Year Emissions Inventory, the 15% Rate-of-Progress Plan, and the 9% Rate-of-Progress Plan submitted as part of the December 31, 2001, Attainment Plan/Transport SIP.

These plans demonstrate that ozone forming emissions are reduced from the baseline emissions by 15% during the time period of 1990–1996 and by 9% during the time period of 1996–1999. We are also proposing to approve the MVEBs associated with the revisions to these plans. Additionally, we are proposing to approve the changes to the 1990 base year emissions inventory for the Baton Rouge area.

6. Completeness Finding

The Baton Rouge area Attainment Plan and Transport SIP is deemed to be complete by operation of law. Section 110(k)(1)(B) of the CAA states that a plan or plan revision that has not been determined by the Administrator to have failed to meet the minimum criteria by the date 6 months after receipt of the submission shall on that date be deemed by operation of law to meet such minimum criteria. The Baton Rouge area SIP was deemed complete by operation of law as of June 30, 2002.

III. Proposed Action

EPA proposes to approve the following actions on the submittal of the Attainment Plan/Transport SIP (December 31, 2001) and related submittals (May 10, 2000, February 27, 2002, February 1, 2002, April 8, 2002, and May 20, 2002):

1. EPA is proposing to approve the ground-level one-hour ozone attainment demonstration SIP for the Baton Rouge area, which shows attainment by November 15, 2005, provided that EPA issues a final approval of all other required local measures.
2. EPA is proposing to approve the Transport Demonstration and the State's request to extend the ozone attainment date for the Baton Rouge area to November 15, 2005, while retaining the area's current classification as a serious ozone nonattainment area, provided that EPA issues a final approval of the State's attainment demonstration and any other required local measures.
3. EPA is proposing to approve the Attainment Demonstration SIP's associated MVEBs, only until the MVEBs are revised according to the State's enforceable commitment.
4. EPA is proposing to approve the RACM Analysis for the Baton Rouge area.
5. EPA is proposing to approve the State's TCM.
6. EPA is proposing to approve the revisions to the 15% ROPP for the control of VOC emissions, the 1990 base year emissions inventory, and the Post-1996 ROPP emissions.
7. EPA is proposing to withdraw our June 24, 2002, rulemaking action entitled ''Determination of Nonattainment as of November 15, 1999, and Reclassification of the Baton Rouge Ozone Nonattainment Area.''
8. EPA is proposing to approve the State's enforceable commitments regarding MOBILE6.
9. EPA is proposing to approve the State's enforceable commitment to conduct and submit a mid-course review by May 1, 2004. If the subsequent analyses conducted by the State as part of the mid-course review indicates additional reductions are needed for the Baton Rouge area to attain the ozone standard, EPA will require the State to implement additional controls as soon as possible until attainment is demonstrated through an approvable attainment demonstration.

IV. Administrative Requirements

A. Executive Order 12866

The Office of Management and Budget (OMB) has exempted this regulatory action from Executive Order 12866, entitled ''Regulatory Planning and Review.''

B. Executive Order 13045

Protection of Children from Environmental Health Risks and Safety Risks (62 FR 19885, April 23, 1997), applies to any rule that: (1) Is determined to be ''economically significant'' as defined under Executive Order 12866, and (2) concerns an environmental health or safety risk that EPA has reason to believe may have a disproportionate effect on children. If the regulatory action meets both criteria, the Agency must evaluate the environmental health or safety effects of the planned rule on children, and explain why the planned regulation is preferable to other potentially effective and reasonably feasible alternatives considered by the Agency.

This rule is not subject to Executive Order 13045 because it does not involve decisions intended to mitigate environmental health or safety risks.

C. Executive Order 13084

Under Executive Order 13084, EPA may not issue a regulation that is not required by statute, that significantly affects or uniquely affects the communities of Indian tribal governments, and that imposes substantial direct compliance costs on those communities, unless the Federal government provides the funds necessary to pay the direct compliance costs incurred by the tribal governments, or EPA consults with those governments. If EPA complies by consulting, Executive Order 13084 requires EPA to provide to the Office of Management and Budget, in a separately identified section of the preamble to the rule, a description of the extent of EPA's prior consultation with representatives of affected tribal governments, a summary of the nature of their concerns, and a statement supporting the need to issue the regulation. In addition, Executive Order 13084 requires EPA to develop an effective process permitting elected officials and other representatives of Indian tribal governments ''to provide meaningful and timely input in the development of

regulatory policies on matters that significantly or uniquely affect their communities.'' Today's proposed rule does not significantly or uniquely affect the communities of Indian tribal governments. This action does not involve or impose any requirements that affect Indian Tribes. Accordingly, the requirements of section 3(b) of Executive Order 13084 do not apply to this rule.

D. Executive Order 13132

Federalism (64 FR 43255, August 10, 1999) revokes and replaces Executive Orders 12612 (Federalism) and 12875 (Enhancing the Intergovernmental Partnership). Executive Order 13132 requires EPA to develop an accountable process to ensure ''meaningful and timely input by State and local officials in the development of regulatory policies that have federalism implications.'' ''Policies that have federalism implications'' is defined in the Executive Order to include regulations that have ''substantial direct effects on the States, on the relationship between the national government and the States, or on the distribution of power and responsibilities among the various levels of government.'' Under Executive Order 13132, EPA may not issue a regulation that has federalism implications, that imposes substantial direct compliance costs, and that is not required by statute, unless the Federal government provides the funds necessary to pay the direct compliance costs incurred by State and local governments, or EPA consults with State and local officials early in the process of developing the proposed regulation. EPA also may not issue a regulation that has federalism implications and that preempts State law unless the Agency consults with State and local officials early in the process of developing the proposed regulation.

This rule will not have substantial direct effects on the States, on the relationship between the national government and the States, or on the distribution of power and responsibilities among the various levels of government, as specified in Executive Order 13132, because it merely approves a state rule implementing a federal standard, and does not alter the relationship or the distribution of power and responsibilities established in the Clean Air Act. Thus, the requirements of section 6 of the Executive Order do not apply to this rule.

E. Regulatory Flexibility

The Regulatory Flexibility Act (RFA) generally requires an agency to conduct a regulatory flexibility analysis of any rule subject to notice and comment rulemaking requirements unless the agency certifies that the rule will not have a significant economic impact on a substantial number of small entities. Small entities include small businesses, small not-for-profit enterprises, and small governmental jurisdictions.

This rule will not have a significant impact on a substantial number of small entities because SIP approvals under section 110 and subchapter I, part D of the Clean Air Act do not create any new requirements but simply approve requirements that the State is already imposing. Therefore, because the Federal SIP approval does not create any new requirements, I certify that this action will not have a significant economic impact on a substantial number of small entities.

Moreover, due to the nature of the Federal-State relationship under the Clean Air Act, preparation of flexibility analysis would constitute Federal inquiry into the economic reasonableness of state action. The Clean Air Act forbids EPA to base its actions concerning SIPs on such grounds. *Union Electric Co.*, v. *U.S. EPA*, 427 U.S. 246, 255–66 (1976); 42 U.S.C. 7410(a)(2).

F. Unfunded Mandates

Under sections 202 of the Unfunded Mandates Reform Act of 1995 (''Unfunded Mandates Act''), signed into law on March 22, 1995, EPA must prepare a budgetary impact statement to accompany any proposed or final rule that includes a Federal mandate that may result in estimated costs to State, local, or tribal governments in the aggregate; or to the private sector, of $100 million or more. Under section 205, EPA must select the most cost-effective and least burdensome alternative that achieves the objectives of the rule and is consistent with statutory requirements. Section 203 requires EPA to establish a plan for informing and advising any small governments that may be significantly or uniquely impacted by the rule.

EPA has determined that the approval action proposed does not include a Federal mandate that may result in estimated costs of $100 million or more to either State, local, or tribal governments in the aggregate, or to the private sector. This Federal action proposes to approve pre-existing requirements under State or local law, and imposes no new requirements. Accordingly, no additional costs to State, local, or tribal governments, or to the private sector, result from this action.

List of Subjects in 40 CFR Part 52

Environmental protection, Air pollution control, Hydrocarbons, Nitrogen oxides, Ozone, Reporting and recordkeeping requirements.

Authority: 42 U.S.C. 7401 *et seq.*

Dated: July 25, 2002.

Gregg A. Cooke,

Regional Administrator, Region 6.

List of Subjects in 40 CFR Part 52

Environmental protection, Air pollution control, Hydrocarbons, Nitrogen oxides, Ozone, Reporting and recordkeeping requirements.

Authority: 42 U.S.C. 7401 *et seq.*

Dated: July 25, 2002.

Gregg A. Cooke,

Regional Administrator, Region 6.

[FR Doc. 02–19441 Filed 8–1–02; 8:45 am]

BILLING CODE 6560–50–P

DEPARTMENT OF TRANSPORTATION

Maritime Administration

46 CFR Part 221

[Docket No. MARAD–2002–12842]

General Approval of Time Charters

AGENCY: Maritime Administration, DOT.

ACTION: Policy review with request for comments.

SUMMARY: Section 9 of the Shipping Act of 1916 requires prior approval of the Secretary of Transportation of U.S. vessel charters to persons who are not U.S. citizens. In 1992, the Maritime Administration (MARAD, we, us, or our), which is charged with responsibility for administering section 9, issued regulations that granted general prior approval of time charters and other forms of temporary use agreements to persons who are not U.S. citizens.

Pursuant to this notice, we are requesting public comment on whether the policy of granting general approval of time charters should be changed.

DATES: Interested parties are requested to submit comments on or before September 3, 2002.

ADDRESSES: Comments should refer to docket number MARAD–2002–12842. Written comments may be submitted by mail to the Docket Clerk, U.S. DOT Dockets, Room PL–401, Department of

Transportation, 400 7th St., SW., Washington, DC 20590–0001. You may also send comments electronically via the Internet at *http://dmses.dot.gov/submit/.* All comments will become part of this docket and will be available for inspection and copying at the above address between 10 a.m. and 5 p.m., E.T., Monday through Friday, except federal holidays.

FOR FURTHER INFORMATION CONTACT: Edmund T. Sommer, Jr., Chief, Division of General and International Law, Office of the Chief Counsel, Maritime Administration, Department of Transportation, Room 7228, 400 7th Street SW., Washington, DC 20590, telephone (202) 366–5181.

Comments regarding this policy review should refer to the docket number that appears at the top of this document. Written comments may be submitted to the Docket Clerk, U.S. DOT Dockets, Room PL–401, 400 7th Street, SW., Washington, DC 20590. Comments may also be submitted by electronic means via the Internet at *http://dmses.dot.gov/submit.* All comments received will be available for examination at the above address between 10 a.m. and 5 p.m. E.T., Monday through Friday, except Federal holidays. An electronic version of this document is available on the World Wide Web at *http://dms.dot.gov.*

SUPPLEMENTARY INFORMATION: Section 9 of the Shipping Act of 1916, 46 App U.S.C. 808, requires the approval of the Secretary of Transportation (MARAD) for, inter alia, the charter to noncitizens of documented vessels owned by citizens of the United States.

In 1989, as a result in substantial changes in the Ship Mortgage Act and amendments to section 9, MARAD began a rulemaking to amend our regulations at 46 CFR part 221—Regulated Transactions Involving Documented Vessels and other Maritime Interests.

In view of the significant changes in the statutory provisions to which the regulations in part 221 are addressed, the interim final rule published February 2, 1989, (54 FR 5382, amended at 54 FR 8195), adopted a conservative approach to interpretation and application of the new law, pending the opportunity to obtain comments from all interested parties. It therefore continued the preexisting requirement that time charters of vessels to noncitizens for 6 months or longer be submitted for review and approval.

After evaluation of the comments received on the first interim final rule, a number of amendments and clarifications of the rule appeared to be warranted. Mindful of Congress' admonition that MARAD should ''temper the consideration of a transfer in interest or control to a [noncitizen] with a concern that the vessel may be needed in time of war or national emergency'', and in an attempt to balance this national security role with the desire of many that MARAD completely relinquish its regulatory role in these transactions, we proposed in an April 13, 1990, NPRM a regulation that would significantly relax regulation of the financing and transfer of documented vessels. One proposed change was that general approval for all charters (other than demise charters for operation in the coastwise trade) to noncitizens be granted for periods of up to five years, and that certain limited charters, such as space charters, slot charters, drilling contracts, and contracts of affreightment (except where a named vessel is dedicated to the contract), be granted general approval, regardless of their duration. Information copies of all charters granted general approval would have to be filed with MARAD.

In the April 13, 1990 NPRM (55 FR 14040), the views of interested parties were specifically invited with regard to further liberalization of the section which granted general approvals. One possibility on which we asked for comment was general approval for transactions involving transfers of an interest in or control of citizen-owned documented vessels to persons who are noncitizens for purposes of section 2, but who, nevertheless, are eligible to document a vessel pursuant to 46 U.S.C. 12102 (documentation citizens). Another possibility was general approval for transactions under section 9(c)(1) so as to place U.S. citizens on an exact par with documentation citizens, which need not apply for such approvals (section 9(c)(1) applies only to documented vessels *owned by citizens of the United States,* a section 2 test). In all events, we noted, bareboat/demise charters to non-section 2 citizens of vessels operating in coastwise trade would be excepted.

While there were many specific comments on certain issues, commenters generally agreed that MARAD should provide general approval for all transfers short of a change of registry. Their position was that MARAD should recognize the distinction between the two basic classes of section 9 transfer: (1) Those involving transfer of flag for operation (whether or not involving sale to new owners), and (2) other section 9 transactions in which the vessel remains under U.S. flag. In respect to national security, commenters suggested, the two classes present risks very different in kind and degree. In the one, there may be not only a foreign owner and a foreign crew, but a new sovereign whose national interests would have to be respected. As stated by one commenter, ''[i]f the ship is certifiably of present or foreseeable importance for national defense, the case for refusing approval is evidently strong.'' In the other class of transfers, even in the case of a sale, the owner will remain an American corporation subject to American law (including requisition authority in time of emergency), the vessel will and must remain documented under U.S. flag, and the officers and crew will still consist of American citizens. In this case, as was pointed out, national security interests are fully preserved regardless of the form or substance of the transaction. The commenter stated that ''[t]his analysis suggests an order of supervision different for each of these classes (of transfer).''

Upon reexamination of the legislative history of Public Law 100–710 and analysis of the many comments received on this issue, we accepted the argument for different ''order(s) of supervision'' for the two distinct classes of transfer as not inconsistent with that legislative history or with MARAD's national security responsibilities under section 9. Accordingly, in a second interim final rule published July 3, 1991 (56 FR 30654), we provided general approval for all section 9 transactions other than transfer of registry except certain transfers to ''Bowaters'' corporations, sales for scrapping in a foreign country and bareboat charters of vessels operating in the coastwise trade. Consistent with MARAD's national security role, however, that general section 9 approval was not applicable during any period of national emergency nor would it apply to transactions involving certain named countries with whom trade is prohibited. The requirement that information copies of all charters be filed was eliminated, in favor of an ''as requested'' filing requirement.

With the endorsement of many and the objection of none (save those who favored further liberalization), the final rule, published June 3, 1992 (57 FR 23470), incorporated the above changes. Part 221 as now written grants general approval for the sale, mortgage, lease, charter, etc. (but not transfer of registry) of citizen-owned vessels to noncitizens, so long as the country is not at war, there is no Presidential declaration of national emergency invoking Section 37 of the Shipping Act and the noncitizen

is not subject to the control of a country with whom trade is prohibited.

Reinstatement of a requirement for MARAD review and written approval of time charters to noncitizens of documented vessels would require a rulemaking proceeding to amend 46 CFR part 221.

Commenters are requested to specifically address the question of what, if any, economic impact a return to case by case review prior to approval of time charters would cause?

Dated: July 30, 2002.

By Order of the Maritime Administrator.

Joel C. Richard,

Secretary, Maritime Administration.

[FR Doc. 02–19593 Filed 8–1–02; 8:45 am]

BILLING CODE 4910–81–P

Notices

Federal Register

Vol. 67, No. 149

Friday, August 2, 2002

This section of the FEDERAL REGISTER contains documents other than rules or proposed rules that are applicable to the public. Notices of hearings and investigations, committee meetings, agency decisions and rulings, delegations of authority, filing of petitions and applications and agency statements of organization and functions are examples of documents appearing in this section.

DEPARTMENT OF AGRICULTURE

Agricultural Marketing Service

[Docket No. FV02–996–2–Notice]

Peanut Standards Board

AGENCY: Agricultural Marketing Service, USDA.

ACTION: Request for nominations.

SUMMARY: The Farm Security and Rural Investment Act of 2002 (Farm Bill) requires that the Secretary of Agriculture establish a Peanut Standards Board for the purpose of advising the Secretary regarding the establishment of quality and handling standards for domestically produced and imported peanuts. The Department of Agriculture (USDA) seeks nominations of individuals to be considered for selection as Board members. The Board consists of 18 members representing producers and industry representatives who would serve staggered three-year terms of office.

DATES: Written nominations must be received on or before September 3, 2002.

ADDRESSES: Nominations should be sent to Mr. Ronald L. Cioffi, Chief, Marketing Order Administration Branch, Fruit and Vegetable Programs, AMS, USDA, 1400 Independence Avenue, SW., STOP 0237, Washington, DC 20250–0237; Phone: (202) 720–2491; Fax: 202–720–8938.

SUPPLEMENTARY INFORMATION: Section 1308 of the Farm Bill (Public Law 107–171) requires that the Secretary of Agriculture establish a Peanut Standards Board (Board) for the purpose of advising the Secretary regarding the establishment of quality and handling standards for domestically produced and imported peanuts. The Farm Bill requires the Secretary to consult with the Board in advance whenever the Secretary considers establishing or changing quality and handling standards for peanuts.

The Farm Bill provides that the Board consist of 18 members, with three producers and three industry representatives from the States specified in each of the following producing regions: (a) Southeast (Alabama, Georgia, and Florida); (b) Southwest (Texas, Oklahoma, and New Mexico); and (c) Virginia/Carolina (Virginia and North Carolina.) The Farm Bill also provides that during the transition period, the Secretary may designate persons serving as members of the Peanut Administrative Committee (Committee) to serve as members of the Board for the purpose of carrying out the duties of the Board. Members of the Committee have been designated to serve as interim members of the Board. The transition period is the period beginning with the date of enactment of the Farm Bill (May 13, 2002) and ending with the earlier of the date the Secretary appoints the members of the Board or 180 days after enactment of the Farm Bill.

For the initial appointments, the Farm Bill requires that the Secretary shall stagger the terms of the members so that: (a) One producer member and peanut industry member from each peanut producing region services a one-year term; (b) one producer member and peanut industry member from each peanut producing region serves a two-year term; and (c) one producer member and peanut industry member from each peanut producing region serves a three-year term. The appointees will serve staggered terms of office ending June 30, 2003, June 30, 2004, and June 30, 2005, respectively. For the purposes of this request for nominations, the term ''peanut industry representatives'' includes representatives of the manufacturers, sellers, buying points, marketing associations, marketing cooperatives, and other like entities. The Farm Bill exempts the Board from the requirements of the Federal Advisory Committee Act.

USDA invites those individuals, organizations, and group affiliated with the categories listed above to nominate individuals for membership on the Board for both producer and industry members. Nomination documents should include: the nominee's name, address and phone number; the nominee's qualifications for membership to the Board (e.g., number of years in industry, current position, membership and offices held in industry organizations); and a statement signed by the nominee indicating his/her willingness to serve on the Board. Also, nominees should complete a qualification form which may be obtained from: Jim Wendland or Kenneth G. Johnson, DC Marketing Field Office, Marketing Order Administration Branch, Fruit and Vegetable Programs, AMS, USDA, 4700 River Road, suite 2A04, Unit 155, Riverdale, Maryland 20737; telephone (301) 734–5243, Fax: (301) 734–5275.

Equal opportunity practices will be followed in all appointments to the Board in accordance with USDA policies. To ensure that the Board takes into the needs of the diverse groups within the peanut industry, membership shall include, to the extent practicable, individuals with demonstrated ability to represent minorities, women, persons with disabilities, and limited resource agriculture producers.

Authority: Section 1308 of Public Law 107–171.

Dated: July 29, 2002.

A.J. Yates,

Administrator, Agricultural Marketing Service.

[FR Doc. 02–19507 Filed 8–1–02; 8:45 am]

BILLING CODE 3410–02–M

DEPARTMENT OF AGRICULTURE

Food Safety and Inspection Service

[Docket No. 02–027N]

National Advisory Committee on Microbiological Criteria for Foods

AGENCY: Food Safety and Inspection Service, USDA.

ACTION: Notice of public meeting; request for comments.

SUMMARY: The National Advisory Committee on Microbiological Criteria for Foods (NACMCF) will hold a public meeting on August 28, 2002. The committee will continue to discuss (1) *Salmonella* performance standards in meat and poultry products, (2) the scientific basis for establishing safety-based ''use by'' date labeling for refrigerated, ready-to-eat foods, (3) undertake a new topic of assessing the analytical utility of *Campylobacter*

identification and quantification methodologies, and (4) introduce a new topic discussing redefining the meaning of the term ''pasteurization.'' Subcommittees will also meet on August 26th (performance standards), and the 27th and 29th (safety-based ''use by'' date labeling for refrigerated, ready-to-eat foods) to continue working on issues in-progress that will be discussed during the full committee session. In addition, a subcommittee will convene on August 6–8, 2002, to continue its discussion of performance standards and discuss the new charge to the committee regarding the FSIS *Campylobacter* baseline studies.

DATES: The full Committee will hold an open meeting beginning at 9 a.m. on Wednesday, August 28, 2002. During the week of the plenary session, subcommittee meetings will be held on Monday, Tuesday and Thursday, August 26, 27 and 29, 2002. Also, a subcommittee will meet Tuesday through Thursday, August 6–8, 2002. Subcommittee meetings are open to the public.

ADDRESSES: The August 27–29 subcommittee and full committee meetings will be held at the Jurys Washington Hotel, 1500 New Hampshire Ave., NW., Washington, DC, 20036. The subcommittee meetings schedule for August 6–8, and 26, 2002, will be held at the Aerospace Building, 901 ''D'' St., SW., Washington, DC. The comments and all NACMCF documents related to this meeting will be available for public inspection in the FSIS Docket Room between 8:30 a.m. and 4:30 p.m., Monday through Friday. The comments and NACMCF documents will also be available on the Internet at *http://www.fsis.usda.gov/OPPDE/rdad/Publications.htm*. FSIS will finalize an agenda on or before the meeting date and post it to its Internet Web page. Send an original and two copies of comments to the Food Safety and Inspection Service Docket Room: Docket #02–027N, Room 102 Cotton Annex Building, 300 12th Street, SW., Washington, DC 20250. Comments may also be sent by facsimile (202) 690–0486. The comments and the official transcript of the meeting, when they become available, will be kept in the FSIS Docket Room at the above address.

FOR FURTHER INFORMATION CONTACT: Persons interested in making a presentation, submitting technical papers, or providing comments should contact Karen Thomas (202) 690–6620, Fax (202) 690–6334, e-mail address: *Karen.Thomas@fsis.usda.gov*, or mailing address: Food Safety and Inspection Service, Department of Agriculture, Office of Public Health and Science, Aerospace Center, Room 333, 1400 Independence Avenue, SW, Washington, DC 20250–3700. Persons requiring a sign language interpreter or other special accommodations should notify Ms. Thomas, by August 16, 2001.

SUPPLEMENTARY INFORMATION:

Background

The NACMCF was established on April 18, 1988, in response to a recommendation of the National Academy of Sciences for an interagency approach to microbiological criteria for food, and in response to a recommendation of the U.S. House of Representatives Committee on Appropriations, as expressed in the Rural Development, Agriculture, and Related Agencies Appropriation Bill for fiscal 1988. The Charter for the NACMCF is available for viewing on the FSIS Internet Web page at *http://www.fsis.usda.gov/OA/programs/nacmcf_chart.htm*.

The NACMCF provides scientific advice and recommendations to the Secretary of Agriculture and the Secretary of Health and Human Services on public health issues relative to the safety and wholesomeness of the U.S. food supply, including development of microbiological criteria and review and evaluation of epidemiological and risk assessment data and methodologies for assessing microbiological hazards in foods. The Committee also provides advice to the Centers for Disease Control and Prevention and the Departments of Commerce and Defense. Dr. Merle Pierson, Deputy Under Secretary for Food Safety, USDA, is the Committee Chair, Dr. Robert E. Brackett, Director for Food Safety, Center for Food Safety and Applied Nutrition, Food and Drug Administration, is the Co-Chair, and Brenda Halbrook, FSIS, is the Director of the Executive Secretariat office.

At the August 28, 2002, meeting, the Committee will

- Discuss *Salmonella* performance standards in meat and poultry products;
- Discuss the scientific basis for establishing safety-based ''use by'' date labeling for refrigerated, ready-to-eat foods; and
- Undertake a new topic of assessing the analytical utility of *Campylobacter* identification and quantification methodologies.
- Introduce a new topic discussing redefining the meaning of the term ''pasteurization.''

Documents Reviewed by NACMCF

FSIS intends to make available to the public all materials that are reviewed and considered by NACMCF regarding its deliberations. Generally, these materials will be made available as soon as possible after the full committee meeting. Further, FSIS intends to make these materials available in both electronic format on the FSIS web page, as well as hard copy format in the docket room. Often, an attempt is made to make the materials available at the start of the full committee meeting when sufficient time is allowed in advance to do so.

FSIS also intends to post all comments associated with this docket on its web page in the near future. FSIS reserves the right to redact any offensive language that may have been included in these public comments. The uncensored text will be made available in the FSIS Docket Room.

For electronic copies, all NACMCF documents and comments are electronic conversions from a variety of source formats into HTML that may have resulted in character translation or format errors. Readers are cautioned not to rely on this HTML document. Minor changes to materials in electronic format may be necessary in order to meet the Web Accessibility Act requirement in which graphs, charts, and tables must be accompanied by a text descriptor in order for the vision impaired to be made aware of the content. FSIS will add these text descriptors along with a qualifier that the text is a simplified interpretation of the graph, chart, or table. Portable Document Format (PDF) and/or paper documents of the official text, figures, and tables can be obtained from the FSIS Docket Room.

Copyrighted documents will not be posted on the FSIS web site, but are available for inspection in the FSIS docket room.

Additional Public Notification

Public awareness of all segments of rulemaking and policy development is important. Consequently, in an effort to better ensure that minorities, women, and persons with disabilities are aware of this notice, FSIS will announce it and make copies of this **Federal Register** publication available through the FSIS Constituent Update. FSIS provides a weekly Constituent Update, which is communicated via Listserv, a free e-mail subscription service. In addition, the update is available on-line through the FSIS Web page located at *http://www.fsis.usda.gov*. The update is used to provide information regarding FSIS policies, procedures, regulations, **Federal Register** notices, FSIS public meetings, recalls, and any other types of information that could affect or would be of interest to our constituents/stakeholders. The constituent Listserv

consists of industry, trade, and farm groups, consumer interest groups, allied health professionals, scientific professionals, and other individuals that have requested to be included. Through the Listserv and Web page, FSIS is able to provide information to a much broader, more diverse audience.

For more information contact the Congressional and Public Affairs Office, at (202) 720–9113. To be added to the free e-mail subscription service (Listserv) go to the ''Constituent Update'' page on the FSIS Web site at *http://www.fsis.usda.gov/oa/update/update.htm*. Click on the ''Subscribe to the Constituent Update Listserv'' link, then fill out and submit the form.

Done at Washington, DC, on July 30, 2002.

William J. Hudnall,

Acting Administrator.

[FR Doc. 02–19529 Filed 8–1–02; 8:45 am]

BILLING CODE 3410–DM–P

DEPARTMENT OF AGRICULTURE

Forest Service

Intent To Prepare an Environmental Impact Statement for the Sugar Run Project, McKean County, PA

AGENCY: Forest Service, USDA.

ACTION: Notice of intent to prepare an environmental impact statement.

SUMMARY: The Forest Service, Allegheny National Forest, Bradford Ranger District, will prepare a Draft Environmental Impact Statement to disclose the environmental consequences of the proposed Sugar Run Project. The Forest Service is proposing actions that would move the Sugar Run Project Area from the existing condition towards the Desired Future Condition (DFC) and would maintain the DFC in situations where it has been attained. The DFC is described in the Allegheny National Forest Land and Resource Management Plan (Forest Plan).

Proposed activities to meet the Desired Future Condition fall into three main categories. (1) Timber harvest and reforestation treatments consist of: Shelterwood seedcut/removal cuts, removal cuts, commercial thinning, group selection, single tree selection, improvement cutting, manual site preparation and release, herbicide application, fertilization, fencing, and tree planting. (2) Wildlife habitat improvement treatments consist of: noncommercial thinning, oak/hickory/shrub underplanting, pruning and release of apple trees, hawthorn release, constructing new openings, planting/fencing shrubs in openings, mowing, topdressing, seeding with wildflowers and grass, constructing bat boxes, bluebird boxes and vernal ponds. (3) Recreation treatments consist of: trail relocation, trail drainage improvement and footbridge construction. (4) Transportation treatments consist of: road decommissioning, road repair, road construction, road resurfacing, obtaining a right of way from an adjacent property owner, expanding stone pits, and changing road access.

DATES: Comments and suggestions concerning the scope of the analysis should be submitted (postmarked) by September 3, 2002 to ensure timely consideration.

ADDRESSES: Submit written, oral, or e-mail comments by: (1) Mail ''Sugar Run Project,'' ID Team Leader, HC 1 Box 88, Bradford, PA 16701; (2) phone—814–362–4613; (3) e-mail—*anf/r9_allegheny@fs.fed.us* (**please note:** when commenting by e-mail be sure to list *Sugar Run EIS* in the subject line and include a US Postal Service address so we may add you to our mailing list). For further information contact Chris Losi, project team leader, Bradford Ranger District, at 814–362–4613 or mail/e-mail correspondence to addresses listed above.

SUPPLEMENTARY INFORMATION: The Allegheny National Forest Land and Resource Management Plan (Forest Plan) sets site-specific goals for the management of forest resources. The Sugar Run Project includes portions of Management Area (MA) 3.0, which emphasizes timber harvesting as a means to make desired changes to forest vegetation and satisfy the public demand for wood products. The project area also includes portions of MA 6.1, which emphasizes providing habitat for wildlife, attractive scenery, and opportunities for non-motorized recreation.

Preliminary Issues were identified based on past projects in the area (environmental assessments), issues developed for similar projects, and site-specific concerns raised by the resource specialists. These issues, listed below, will provide a framework that the Forest Service will use to analyze a range of alternatives, including No Action for the Project Area.

1. *Road Management*—The Sugar Run Project Area contains an array of Forest Service, state, and private roads. Although roads provide important access for management and recreation, they are also capable of causing resource damage. The activities that have been proposed are the result of a detailed roads analysis. As alternatives are developed, the Forest Service will continue to analyze the risks and benefits of changes to the road system.

2. *Even-Aged/Uneven-Aged Management*—Even-aged management has been identified by the Forest Plan as the primary silvicultural system to be used in MA 3.0. Uneven-aged management is an option for MA 6.1 as well as inclusions within MA 3.0 such as riparian areas, wet soils, or visually sensitive areas. Previous environmental analyses have shown that many members of the public have a strong interest in the silvicultural system used on Forest Service lands.

3. *Threatened and Endangered Species*—Although no endangered, threatened, or sensitive species were found within the project area, an endangered Indiana bat was documented near the project area. Potential effects to the Indiana bat and its habitat will be evaluated for all of the alternatives considered in detail.

4. *OHV trail expansion*—A project to expand an existing trail for Off-Highway-Vehicles (OHVs) into the Sugar Run Project Area is in the preliminary planning stage. Although analysis of this trail expansion will occur in a separate environmental document, the Sugar Run EIS will need to consider the cumulative effects anticipated over the next ten years associated with the OHV trail expansion.

5. *Location of North Country National Scenic Trail*—Some concerns were raised about the proximity of timber treatments and proposed road construction to the North Country National Scenic Trail. Since the trail is currently near MA 6.1, there may be an opportunity to permanently relocate the trail. On the other hand, a permanent relocation may best be considered on a larger scale than the current project.

Comment Requested

This notice of intent initiates the scoping process, which guides the development of the environmental impact statement. Your comments will help the Forest Service refine and enhance the list of issues that are considered when analyzing alternatives to the proposed action. When this analysis is nearly complete, the Draft EIS will be filed with the Environmental Protection Agency and become available for public review (expected by April 2003). At that time the Environmental Protection Agency will publish a Notice of Availability of the document in the **Federal Register** (this will begin the 45-day comment period on the Draft EIS). After the comment period ends on the Draft EIS, the comments will be

analyzed and considered by the Forest Service in preparing the final environmental impact statement. The Final EIS is scheduled for release in September 2003.

Comments received, including names and addresses of those who comment, will be considered part of the public record and may be subject to public disclosure. Any person may request the Agency to withhold a submission from the public record by showing how the Freedom of Information Act (FOIA) permits such confidentiality.

The Forest Service believes it is important to give reviewers notice at this early stage of several court rulings related to public participation in the environmental review process. First, reviewers of draft environmental impact statements must structure their participation in the environmental review of the proposal so that it is meaningful and alerts an agency to the reviewer's position and contentions (*Vermont Yankee Nuclear Power Corp.* v. *NRDC,* 435 U.S. 519 553 [1978]). Also, environmental objections that could be raised at the draft environmental impact statement stage but that are not raised until after completion of the final environmental impact statement stage may be waived or dismissed by the courts (*City of Angoon* v. *Hodel,* 803 F.2nd 1016, 1022 [9th Cir. 1986] and *Wisconsin Heritages, Inc.* v. *Harris,* 490 F. Supp. 1334, 1338 [E.D. Wis. 1980]).

Because of the above rulings, it is very important that those interested in this proposed action participate by the close of the 45-day comment period so that substantive comments are made available to the Forest Service at a time when they can be meaningfully considered and responded to in the final environmental impact statement. Comments on the draft environmental impact statement should be as specific as possible. It is also helpful if comments refer to specific pages, sections, or chapters of the draft statement. Comments may also address the adequacy of the draft environmental impact statement or the merits of the alternatives formulated and discussed in the statement. Reviewers may wish to refer to Council on Environmental Quality *Regulations for implementing the procedural provisions of the National Environmental Policy Act* at 40 CFR 1503.3 in addressing these points.

This decision will be subject to appeal under 36 CFR 215. The responsible official is John R. Schultz, Bradford Ranger District, HC 1 Box 88, Bradford, PA 16701.

Dated: July 19, 2002.

Kevin B. Elliott,

Forest Supervisor.

[FR Doc. 02–18817 Filed 8–1–02; 8:45 am]

BILLING CODE 3410–11–P

DEPARTMENT OF AGRICULTURE

Forest Service

Blue Mountain Land Exchange; Malheur, Umatilla, and Wallowa-Whitman National Forests; Baker, Grant, Morrow, Umatilla, Union, Wallowa, and Wheeler Counties, Oregon

AGENCY: Forest Service, USDA.

ACTION: Notice of intent to prepare an environmental impact statement.

SUMMARY: The Forest Service, USDA will prepare an environmental impact statement on a proposal to exchange lands with Clearwater Land Exchange-Oregon. Clearwater is acting as a third-party facilitator for multiple non-federal landowners. The environmental impact statement will analyze the proposed exchange of approximately 20,570 acres of federal lands for approximately 36,370 acres of non-federal lands in the vicinity of the Blue Mountains Province of Northeast Oregon. The federal and non-federal lands proposed for exchange are located in Baker, Grant, Morrow, Umatilla, Union, Wallowa, and Wheeler Counties of Northeast Oregon. The affected Forest Service units are the Blue Mountain and Prairie City Ranger Districts of the Malheur National Forest; the Heppner, North Fork John Day, Pomeroy, and Walla Walla Ranger Districts of the Umatilla National Forest; and the Eagle Cap, LaGrande, Pine, Unity, and Wallowa Valley Ranger Districts and the Hells Canyon National Recreation Area of the Wallowa-Whitman National Forest. Implementation of the proposed exchange is scheduled for January 2004. The Malheur, Umatilla, and Wallowa-Whitman National Forrest Supervisors invite the public to submit comments on their proposal and suggestions on the scope of the proposed exchange. The Forest Supervisors also invite the public to participate in the environmental analysis and decision-making process for the proposed exchange of lands.

DATES: In order to maintain the estimated schedule for completing the final environmental impact statement, comments about the proposed exchange and the scope of the analysis should be received by September 13, 2002. Written comments are preferable, but oral comments will also be accepted. The draft environmental impact statement is scheduled for availability in June 2003, and the final environmental impact statement is expected to be available in October 2003.

ADDRESSES: Written comments or requests for information about this proposal should be addressed to Linda Vore, Supervisory Realty Specialist, Wallowa-Whitman National Forest, PO Box 907, Baker City, OR 97814. Oral comments may be conveyed to Linda Vore in person at the Wallowa-Whitman National Forest, 1550 Dewey Avenue, Baker City, Oregon; or by telephone at 541–523–1249.

FOR FURTHER INFORMATION CONTACT: Linda Vore, Supervisory Realty Specialist, PO Box 907, Baker City, OR 97814; Telephone 541–523–1249.

SUPPLEMENTARY INFORMATION:

Purpose and Need for Action

The proposal to exchange lands in the Blue Mountain Province of Northeast Oregon responds to the Forest Service's need for consolidation of federal land ownership patterns in the Malheur, Umatilla, and Wallowa-Whitman National Forests. The consolidation of federal ownership allows the Forest Service to enhance the management of the public's natural resources by acquiring lands that (1) facilitate public access to present federal lands, (2) protect habitat for several threatened, endangered, and sensitive species, (3) improve wetlands, floodplains, and riparian areas, (4) preserve segments of the Imnaha, Lostine, Eagle Creek, and North Fork John Day Wild and Scenic Rivers, (5) convert ownership within the Eagle Cap, Hells Canyon, and Wenaha-Tucannon Wildernesses and the Hells Canyon National Recreation Area, (6) decrease the complexity of maintaining property boundaries, (7) reduce the number of access permits to private inholdings, and (8) improve the efficiency of resource management by focusing the Forests' funding and staff on consolidated ownerships.

Proposed Action

The Forest Supervisors propose to exchange approximately 20,570 acres of federal lands for approximately 36,370 acres of non-federal lands in the vicinity of the Blue Mountains Province of Northeastern Oregon. The federal and non-federal lands proposed for exchange are located in Baker, Grant, Morrow, Umatilla, Union, Wallowa, and Wheeler Counties of Northeast Oregon. The affected Forest Service units are the Blue Mountain and Prairie City Ranger Districts of the Malheur National Forest; the Heppner, North Fork John Day,

Pomeroy, and Walla Walla Ranger Districts of the Umatilla National Forest; and the Eagle Cap, LaGrande, Pine, Unity, and Wallowa Valley Ranger Districts and the Hells Canyon National Recreation Area of the Wallowa-Whitman National Forest. All of the parcels proposed for exchange are located within the geographic area of ceded lands and/or areas of interest of the Burns Paiute Tribes, the Nez Perce Tribe, the Confederated Tribes of the Umatilla Reservation, or the Confederated Tribes of the Warm Springs Reservation. All acreages in this proposal are approximate.

The United States of America would convey fee title to Clearwater Land Exchange-Oregon for parcels totaling approximately 20,570 acres throughout Baker, Grant, Morrow, Umatilla, Union, and Wallowa counties in the State of Oregon. Approximately 40 acres of these parcels are in Baker County in the vicinity of South Fork Burnt River in the Wallowa-Whitman National Forest. Approximately 6,090 acres of these parcels are in Grant County in the vicinity of Deer Creek (2,400 acres), Bear Creek (3,170 acres), Beech Creek (70 acres), Jeff Davis Creek (120 acres), and Thompson Gulch (20 acres) in the Malheur National Forest and in the vicinity of Rains Canyon (150 acres) and Bully Creek (160 acres) in the Umatilla National Forest. Approximately 380 acres of these parcels are in Morrow County in the vicinity of Willow Creek (220 acres) and Butler Creek (160 acres) in the Umatilla National Forest. Approximately 6,670 acres of these parcels are in Umatilla County in the vicinity of Meacham Creek (3,600 acres), Cooper Creek (1,800 acres), Swiss Flat (320 acres), Snipe Creek (150 acres), Wilkins Creek (200 acres), Deerhorn Creek (80 acres), California Gulch (40 acres), Pearson Creek (110 acres), and butcher Creek (370 acres) in the Umatilla National Forest. Approximately 400 acres of these parcels are in Union County in the vicinity of Sullivan creek in the Wallowa-Whitman National Forest. Approximately 6,990 acres of these parcels are in Wallowa County in the vicinity of Water Canyon (30 acres), Big Canyon (40 acres), Big Sheep Creek (1,900 acres), Imnaha River (1,740 acres), Powwatka Ridge (1,760 acres), Big Flat (120 acres), McCoy Flat (80 acres), Lostine River (40 acres), Spring Creek (120 acres), Prairie Creek (280 acres), Carrol Creek (680 acres), and Summit Creek (200 acres) in the Wallowa-Whitman National Forest.

Clearwater Land Exchange-Oregon would convey fee title to the United States of America for parcels totaling approximately 36,370 acres throughout Baker, Grant, Morrow, Umatilla, Union, Wallowa, and Wheeler counties in the State of Oregon. Approximately 320 acres of these parcels are in Baker County in the vicinity of Eagle Creek in the Wallowa-Whitman National Forest. Approximately 10,660 acres of these parcels are in Grant County in the vicinity of Aldrich Mountain (200 acres), Crazy Creek (640 acres), Deer Creek (160 acres), West Fork Deer Creek (400 acres), Murderers Creek (630 acres), Birch Creek (480 acres), Lewis Officer Creek (40 acres), Beech Creek (2440 acres), Clear Creek (1,110 acres), Four Corners (120 acres), Bridge Creek (40 acres), Phipps Meadow (280 acres), Bridge Creek Meadow (160 acres), and Wallowa Spring (30 acres) in the Malheur National Forest; in the vicinity of Wilson Prairie (2,250 acres), Happy Jack Creek (480 acres), Bologna Basin (200 acres), Rains Canyon (120 acres), Patterson Basin (400 acres), North Fork John Day River (270 acres), Deep Creek (50 acres), and Trout Meadows (110 acres) in the Umatilla National Forest; and in the vicinity of Trout Creek (50 acres) in the Wallowa-Whitman National Forest. Approximately 160 acres of these parcels are in Morrow County in the vicinity of Matlock Creek in the Umatilla National Forest. Approximately 8,120 acres of these parcels are in Umatilla County in the vicinity of Meacham Creek (2,900 acres), Owens Creek (480 acres), North Fork John Day River (1,900 acres), Bear Wallow Creek (320 acres), Camp Creek (1,880 acres), and Camas Creek (640 acres) in the Umatilla National Forest. Approximately 550 acres of these parcels are in Union County in the vicinity of McCoy Creek (160 acres), Burnt Corral Creek (90 acres), Pelican Creek (260 acres), and Five Points Creek (40 acres) in the Wallowa-Whitman National Forest. Approximately 16,240 acres of these parcels are in Wallowa County in the vicinity of Eden Ridge (380 acres) and the Wenaha River (760 acres) in the Umatilla National Forest and in the vicinity of Kuhn Ridge (1,020 acres), Joseph Creek (660 acres), Doe Creek (160 acres), Chesnimnus Creek (2,200 acres), Big Sheep Creek (260 acres), Imnaha River (8,950 acres) Cow Creek (940 acres), Lostine River (140 acres), Hurricane Creek (510 acres), Morgan Ridge (120 acres), and McGraw Creek (140 acres) in the Wallowa-Whitman National Forest. Approximately 320 acres of these parcels are in Wheeler County in the vicinity of Wineland Lake in the Umatilla National Forest.

The proposed exchange of lands may require amendments to the Land and Resource Management Plans for the Malheur, Umatilla, and Wallowa-Whitman National Forests. Pursuant to the regulations for land exchanges (36 CFR 254.3(f)): ''Lands acquired by exchange that are located within areas having an administrative designation established through the land management planning process shall automatically become part of the area within which they are located, without further action by the Forest Service, and shall be managed in accordance with the laws, rules, and regulations, and land and resource management plan applicable to such area.'' Accordingly, lands acquired within Congressionally Designated Areas such as Wilderness, Wild and Scenic Rivers, and National Recreation Areas would be respectively designated and managed consistently with the surrounding lands.

Possible Alternatives

A full range of alternatives to the proposed action, including a no-action alternative, will be considered in the environmental impact statement. The no-action alternative represents no change from the current pattern of land ownership, and it serves as the baseline for the comparison among the action alternatives. In addition to the proposed action and the no-action alternatives, the environmental impact statement will consider other reasonable alternatives regarding the number and location of parcels to exchange, including alternatives that respond to issues identified by the public during the scoping process.

Responsible Officials

The Responsible Officials are the Forest Supervisors for the Malheur, Umatilla, and Wallowa-Whitman National Forests. They will review all issues, alternatives, and environmental consequences associated with the analysis; consider all public comments and response; and comply with all policies, regulations, and laws in making a decision regarding the proposed exchange of lands documented in the Final Environmental Impact Statement for the Blue Mountain Land Exchange. The Responsible Officials will document their decision and their rationale for the decision in a Record of Decision. Their decision will be subject to public notice, review, comment, and appeal under the Forest Service Regulations for Notice, comment, and Appeal Procedures for National Forest System Projects and Activities at 36 CFR part 215.

Nature of Decision To Be Made

The Forest Service will determine if the lands to be exchanged are desirable in the public interest and suitable for inclusion in the National Forest System. Land exchanges are discretionary, voluntary real estate transactions between the federal and non-federal parties. The exchange can only be completed after the authorized officer determines that the exchange meets the requirements at 36 CFR 254.3(b): (1) The resource values and the public objectives served by the non-federal lands and interests to be acquired are equal to or exceed the resource values and public objectives served by the federal lands to be disposed, and (2) the intended use of the disposed federal lands will not substantially conflict with established management objective son adjacent federal lands, including Indian Trust Lands.

Lands will be exchanged on a value for value basis, based on current fair market value appraisals. The appraisal is prepared in accordance with the Uniform Appraisal Standards of Professional Appraisal Practice and the Uniform Appraisal Standards for Federal Land Acquisition. The appraisal prepared for the land exchange is reviewed by a qualified review appraiser to ensure that it is fair and complies with the appropriate standards. Under the Federal Land Policy and Management Act of 1976, all exchanges must be equal in value. Forest Service regulations at 36 CFR 254.3 require that exchanges must be of equal value or equalized pursuant to 36 CFR 254.12 by cash payment after making all reasonable efforts to equalize values by adding or deleting lands. If lands proposed for exchange are not equal in value, either party may make them equal by cash payment not to exceed 25 percent of the federal land value.

Preliminary Issues

Preliminary scoping indicates that there may be issues associated with public access, protected species, old-growth habitat, floodplain areas, structures and facilities, private lands within Congressionally designated areas, and Tribal interests. The proposed exchange may require amendments to the National Forest Land and Resource Management Plans for the Malheur, the Umatilla, and the Wallowa-Whitman National Forests.

Scoping Process

The Forest Service encourages full participation in the proposed land exchange, beginning with the scoping process. Scoping will include notice in the Malheur, Umatilla, and Wallowa-Whitman National Forests' Quarterly Schedule of Proposed Actions; distribution of letters to individuals, organizations, and agencies who have already indicated interest in land exchanges; communication with tribal interests; and publication of news releases in the Blue Mountain Eagle, the Eastern Oregoinian, and the Baker City Herald, the newspapers of record, respectively, for the Malheur, Umatilla, and Wallowa-Whitman National Forests. The news release will also be distributed to other local newspapers that serve areas affected by this proposal. Public meetings in the form of open houses will be scheduled, and notice of times and locations will be provided at a later date. The scoping process will include identifying key issues, exploring additional alternatives, and identifying potential environmental effects of the proposed action and the alternatives.

Comment Requested

The Forest Service is seeking comments from individuals, organizations, tribes, state and local agencies, and other federal agencies that may be interested in or affected by the proposed land exchange. All comments received in response to this notice, including the names and addresses of those who comment, will be considered part of the public record on this proposal and will be available for public inspection. The comments will be use din the preparation of the draft environmental impact statement.

The draft environmental impact statement is scheduled for distribution to the public in June 2003. The comment period on the draft statement will be 45 days. Comments on the draft statement should be as specific as possible. It is helpful if comments refer to specific pages or chapters of the draft statement. Comments may also address the adequacy of the draft statement or the merits of the alternatives formulated and discussed in the statement. Reviewers may wish to refer to the Council on Environmental Quality Regulations for implementing the procedural provisions of the National Environmental Policy Act at 40 CFR 1503.3 in addressing these points.

After the 45-day comment period ends, the comments will be analyzed and considered by the Forest Service in preparing the final environmental impact statement. The final environmental impact statement is scheduled for completing by October 2003. In the final statement, the Forest Service will respond to all substantive comments received during the public comment period.

The Forest Service believes it is important to give reviewers notice of several court rulings related to public participation in the environmental review process. First, reviewers of the draft environmental impact statements must structure their participation in the environmental review of the proposal so that it is meaningful and alerts an agency to the reviewer's position and contentions. Vermont Yankee Nuclear Power Corporation versus Natural Resources Defense Council, 435 US 519, 553 (1978). Also, environmental objections that could be raised at the draft environmental impact statement stage, but that are not raised until completion of the final environmental impact statement, may be waived or dismissed by the courts. City of Angoon versus Hodel, 803 F 2d 1016, 1022 (9th Cir, 1986) and Wisconsin Heritages, Incorporated versus Harris, 490 F Supp 1334, 1338 (ED Wis, 1980). Because of these court rulings, it is important that those interested in this proposed action participate by the close of the 45-day comment period, so substantive comments and objections are made available to the Forest Service at a time when it can be meaningfully consider them and respond to them in the final environmental impact statement.

Dated: July 25, 2002

Roger W. Williams,

Malheur National Forest.

Dated: July 25, 2002.

Jeff D. Blackwood,

Forest Supervisor, Umatilla National Forest.

Dated: July 25, 2002.

John C. Schuyler,

Deputy Forest Supervisor, Wallowa-Whitman National Forest.

[FR Doc. 02–19481 Filed 8–1–02; 8:45 am]

BILLING CODE 3410–11–M

DEPARTMENT OF AGRICULTURE

Forest Service

Olympic Provincial Advisory Committee (OPAC)

AGENCY: Forest Service, USDA.

ACTION: Notice of meeting.

SUMMARY: The Olympic Province Advisory Committee (OPAC) will meet on August 16, 2002. The meeting will be held at the Quinault Indian Nation's Department of Natural Resource Conference Room in Taholah, Washington. The meeting will begin at 9:30 a.m. and end at approximately 3 p.m. Agenda topics are: (1) Current status of key Forest issues; (2) Status

update on the Resource Advisory Committees for Rural Schools and Community Self-Determination Act of 2000; (3) Regional and local tribal relations; (4) Open forum; and (5) Public comments.

All Olympic Province Advisory Committee Meetings are open to the public. Interested citizens are encourage to attend.

FOR FURTHER INFORMATION CONTACT: Direct questions regarding this meeting to Ken Eldredge, Province Liaison, USDA, Olympic National Forest Headquarters, 1835 Black Lake Blvd. Olympia, WA 98512–5623, (360) 956–2323 or Dale Hom, Forest Supervisor at (360) 956–2301.

Dated: July 23 2002.

Kathy O'Halloran,

Acting Forest Supervisor, Olympic National Forest.

[FR Doc. 02–19480 Filed 8–1–02; 8:45 am]

BILLING CODE 3410–11–M

DEPARTMENT OF AGRICULTURE

Forest Service

Siskiyou County Resource Advisory Committee

AGENCY: Forest Service, USDA.

ACTION: Notice of meeting.

SUMMARY: The Siskiyou County Resource Advisory Committee (RAC) will meet on August 19, 2002, and then again on August 26, 2002 in Yreka, California. The purpose of the meetings is to review the fiscal year 2002 project proposals in order to make recommendations to the designated federal official.

DATES: The meetings will be held August 19, 2002 from 1 p.m. to 7 p.m., and August 26, 2002 from 4 p.m. to 8 p.m.

ADDRESSES: The meetings will be held at the Yreka High School Library, Preece Way, Yreka, California.

FOR FURTHER INFORMATION CONTACT: Brian Harris, Meeting Coordinator, USDA, Klamath National Forest, 1312 Fairlane Road, Yreka, California, 96097, (530) 841–4485; E-mail *bdharris@fs.fed.us.*

SUPPLEMENTARY INFORMATION: The meeting is open to the public. Public comment opportunity will be provided and individuals will have the opportunity to address the Committee at that time.

Dated: July 25, 2002.

Margaret J. Boland,

Forest Supervisor.

[FR Doc. 02–19479 Filed 8–1–02; 8:45 am]

BILLING CODE 3410–11–M

COMMITTEE FOR PURCHASE FROM PEOPLE WHO ARE BLIND OR SEVERELY DISABLED

Procurement List; Additions

AGENCY: Committee for Purchase from People Who Are Blind or Severely Disabled.

ACTION: Additions to Procurement List.

SUMMARY: This action adds to the Procurement List a service to be furnished by nonprofit agencies employing persons who are blind or have other severe disabilities.

EFFECTIVE DATE: September 1, 2002.

ADDRESSES: Committee for Purchase From People Who Are Blind or Severely Disabled, Jefferson Plaza 2, Suite 10800, 1421 Jefferson Davis Highway, Arlington, Virginia 22202–3259.

FOR FURTHER INFORMATION CONTACT: Sheryl D. Kennerly, (703) 603–7740.

SUPPLEMENTARY INFORMATION:

On June 7, 2002, the Committee for Purchase From People Who Are Blind or Severely Disabled published notice (67 FR 39337) of proposed additions to the Procurement List. After consideration of the material presented to it concerning capability of qualified nonprofit agencies to provide the service and impact of the additions on the current or most recent contractors, the Committee has determined that the services listed below are suitable for procurement by the Federal Government under 41 U.S.C. 46–48c and 41 CFR 51–2.4. I certify that the following action will not have a significant impact on a substantial number of small entities. The major factors considered for this certification were:

1. The action will not result in any additional reporting, recordkeeping or other compliance requirements for small entities other than the small organizations that will furnish the service to the Government.

2. The action will result in authorizing small entities to furnish the service to the Government.

3. There are no known regulatory alternatives which would accomplish the objectives of the Javits-Wagner-O'Day Act (41 U.S.C. 46–48c) in connection with the service proposed for addition to the Procurement List.

Accordingly, the following service is added to the Procurement List:

Service

Service Type/Location: Medical Transcription, Federal Bureau of Prisons, Greenville, Illinois.

NPA: The Lighthouse of Houston, Houston, Texas.

Contract Activity: Federal Bureau of Prisons, Greenville, Illinois.

This action does not affect current contracts awarded prior to the effective date of this addition or options that may be exercised under those contracts.

Sheryl D. Kennerly,

Director, Information Management.

[FR Doc. 02–19526 Filed 8–1–02; 8:45 am]

BILLING CODE 6353–01–P

COMMITTEE FOR PURCHASE FROM PEOPLE WHO ARE BLIND OR SEVERELY DISABLED

Procurement List; Proposed Additions and Deletions

AGENCY: Committee for Purchase From People Who Are Blind or Severely Disabled.

ACTION: Proposed additions to and deletions from procurement List.

SUMMARY: The Committee is proposing to add to the Procurement List products and services to be furnished by nonprofit agencies employing persons who are blind or have other severe disabilities, and to delete a service previously furnished by such agencies.

COMMENTS MUST BE RECEIVED ON OR BEFORE: September 1, 2002.

ADDRESSES: Committee for Purchase From People Who Are Blind or Severely Disabled, Jefferson Plaza 2, Suite 10800, 1421 Jefferson Davis Highway, Arlington, Virginia 22202–3259.

FOR FURTHER INFORMATION CONTACT: Sheryl D. Kennerly, (703) 603–7740.

SUPPLEMENTARY INFORMATION: This notice is published pursuant to 41 U.S.C 47(a) (2) and 41 CFR 51–2.3. Its purpose is to provide interested persons an opportunity to submit comments on the possible impact of the proposed actions.

Additions

If the Committee approves the proposed additions, the entities of the Federal Government identified in this notice for each product or service will be required to procure the products and services listed below from nonprofit agencies employing persons who are blind or have other severe disabilities.

I certify that the following action will not have a significant impact on a substantial number of small entities. The major factors considered for this certification were:

1. If approved, the action will not result in any additional reporting, recordkeeping or other compliance requirements for small entities other than the small organizations that will furnish the products and services to the Government.

2. If approved, the action will result in authorizing small entities to furnish the products and services to the Government.

3. There are no known regulatory alternatives which would accomplish the objectives of the Javits-Wagner-O'Day Act (41 U.S.C. 46–48c) in connection with the products and services proposed for addition to the Procurement List. Comments on this certification are invited. Commenters should identify the statement(s) underlying the certification on which they are providing additional information.

The following products and services are proposed for addition to Procurement List for production by the nonprofit agencies listed:

Products

Product/NSN: Cup, Paper, Disposable, Hot, 7350–00–NIB–0177, 7350–00–NIB–0178.
NPA: The Lighthouse for the Blind in New Orleans, New Orleans, Louisiana.
Contract Activity: GSA, General Products Center, Fort Worth, Texas.
Product/NSN: Handle Assembly, 3895–01–135–2538.
NPA: Knox County ARC, Knoxville, Tennessee.
Contract Activity: Defense Supply Center Philadelphia, Philadelphia, Pennsylvania.
Product/NSN: Lewis & Clark Discovery Box, 7125–00–R10–0001 (Lightweight Box), 7125–00–R10–0002 (Cabbage Box).
NPA: Development Workshop, Inc., Idaho Falls, Idaho.
Contract Activity: U.S. Army Corps of Engineers, Omaha, Nebraska.
Product/NSN: Junior Wooden Kitchen Set, M.R. 808.
NPA: Winston-Salem Industries for the Blind, Winston-Salem, North Carolina.
Contract Activity: Defense Commissary Agency (DeCA), Ft. Lee, Virginia.

Services

Service Type/Location: Dining Facility Attendant Services,
At the following locations:
29th Engineering Battalion, Fort Shafter, Hawaii.
Aviation Brigade Dinning Facility, Building 102, Wheeler Army Airfield, Hawaii.
HHC 25th Infantry Division Lite, Buildings 133, 6056, 550, 855 and 1492, Schofield Barracks, Hawaii.
NPA: Opportunities for the Retarded, Inc., Wahiawa, Hawaii.
Contract Activity: U.S. Army Support Command, Fort Shafter, Hawaii.
Service Type/Location: Janitorial/Custodial,
U.S. Air Force/Marine Corps Recruiting Office, Aiea, Hawaii.
U.S. Army Recruiting Office, Aiea, Hawaii.
U.S. Army Recruiting Office, Honolulu, Hawaii.
U.S. Army Recruiting Office, Kaneohe, Hawaii.
U.S. Marine Corps Recruiting Office, Honolulu, Hawaii.
U.S. Navy Recruiting Office, Aiea, Hawaii.
U.S. Navy, Marine Corps & Air Force Recruiting Office, Kaneohe, Hawaii.
NPA: Network Enterprises, Inc., Honolulu, Hawaii.
Contract Activity: U.S. Army Engineer District, Honolulu, Honolulu, Hawaii.
Service Type/Location: Janitorial/Related Services,
U.S. Border Patrol Station, Air Operations, Yuma, Arizona.
U.S. Border Patrol Station, Blythe Office, Blythe, California (Janitorial and Grounds Maintenance).
U.S. Border Patrol Station, Maintenance Facility, Yuma, Arizona.
U.S. Border Patrol Station, Station Office, Yuma, Arizona.
U.S. Border Patrol Station, Traffic Check Point, Highway #78, Arizona.
U.S. Border Patrol Station, Traffic Check Point, Highway #95, Arizona.
U.S. Border Patrol Station, Traffic Check Point, Interstate 8, Arizona.
U.S. Border Patrol Station, Wellton Office, Wellton, Arizona.
NPA: Yuma WORC Center, Inc., Yuma, Arizona.
Contract Activity: Immigration and Naturalization Service, DOJ.
Service Type/Location: Mailroom Support Services, BLM—Arizona State Offices, Phoenix, Arizona.
NPA: The Centers for Habilitation/TCH, Tempe, Arizona.
Contract Activity: Bureau of Land Management—Arizona, Phoenix, AZ.
Service Type/Location: Medical Transcription,
VA Medical Center, West Los Angeles, Los Angeles, California.
NPA: Landmark Services, Inc., Santa Ana, California.
Contract Activity: VA Network Business Center, San Diego, California.
Service Type/Location: Vehicle Maintenance, Basewide, Fort Lewis, Washington.
NPA: Skookum Educational Programs, Port Townsend, Washington.
Contract Activity: USA, Intermediate Brigade Combat Team, Fort Lewis, Washington.

Deletions

I certify that the following action will not have a significant impact on a substantial number of small entities. The major factors considered for this certification were:

1. If approved, the action will not result in any additional reporting, recordkeeping or other compliance requirements for small entities other than the small organizations that will furnish the service to the Government.

2. If approved, the action will result in authorizing small entities to furnish the service to the Government.

3. There are no known regulatory alternatives which would accomplish the objectives of the Javits-Wagner-O'Day Act (41 U.S.C. 46–48c) in connection with the service proposed for deletion from the Procurement List.

The following service is proposed for deletion from the Procurement List:

Service

Service Type/Location: Janitorial/Grounds Maintenance,
Nininger U.S. Army Reserve Center, Fort Lauderdale, Florida.
NPA: Goodwill Industries of Broward County, Inc., Fort Lauderdale, Florida.
Contract Activity: U.S. Army, 81st Regional Support Command, Fort Lauderdale, Florida.

Sheryl D. Kennerly,
Director, Information Management.

[FR Doc. 02–19527 Filed 8–1–02; 8:45 am]
BILLING CODE 6353–01–P

DEPARTMENT OF COMMERCE

Census Bureau

Annual Capital Expenditures Survey

ACTION: Proposed collection; comment request.

SUMMARY: The Department of Commerce, as part of its continuing effort to reduce paperwork and respondent burden, invites the general public and other Federal agencies to take this opportunity to comment on proposed and/or continuing information collections, as required by the Paperwork Reduction Act of 1995, Public Law 104–13 (44 U.S.C. 3506(c)(2)(A)).

DATES: Written comments must be submitted on or before October 1, 2002.

ADDRESSES: Direct all written comments to Madeleine Clayton, Departmental Paperwork Clearance Officer, Department of Commerce, Room 6608, 14th and Constitution Avenue, NW., Washington, DC 20230 (or via the Internet at *mclayton@doc.gov*).

FOR FURTHER INFORMATION CONTACT: Requests for additional information or copies of the information collection instrument(s) and instructions should be directed to Charles Funk, U.S. Census Bureau, Room 1285–3, Washington, DC 20233–6400, (301) 763–3324 or via the Internet at *charles.allen.funk @census.gov*.

SUPPLEMENTARY INFORMATION:

I. Abstract

The Census Bureau plans the continuing information collection for the 2002 Annual Capital Expenditures Survey (ACES). The annual survey collects data on fixed assets and depreciation, sales and receipts, capitalized computer software developed for internal use, and capital expenditures for new and used structures and equipment. The ACES is the sole source of detailed comprehensive statistics on actual business spending by domestic, private, nonfarm businesses operating in the United States. Industrial sectors covered by the survey are based on the 1997 North American Industry Classification System (NAICS). Both employer and nonemployer companies are included in the survey.

The Bureau of Economic Analysis (BEA), the primary Federal user of our annual program statistics, uses the information in refining and evaluating annual estimates of investment in structures and equipment in the national income and product accounts, compiling annual input-output tables, and computing gross domestic product (GDP) by industry. The Federal Reserve Board (FRB) uses the data to improve estimates of investment indicators for monetary policy. The Bureau of Labor Statistics (BLS) uses the data to improve estimates of capital stocks for productivity analysis.

Industry analysts use these data for market analysis, economic forecasting, identifying business opportunities, product development, and business planning.

Proposed changes to the collection are the elimination of two questions requesting the estimated cost of assets acquired under capital lease arrangements entered into during the year, and the amount of capitalized interest incurred during the year to produce or construct assets reported as capital expenditures; and, the addition of a request for data on capitalized costs of computer software developed or obtained for internal use. Data relating to assets acquired under capital lease arrangements (previously collected from employer and nonemployer companies) and capitalized interest (previously collected from employer companies only) will continue to be included as capital expenditures, but the individual questions regarding each will be eliminated. The new question related to computer software will request from employer companies, total capitalized computer software, value of capitalized pre-packaged computer software, value of capitalized custom computer software, and value of capitalized own-account (internally developed) computer software.

II. Method of Collection

The Census Bureau will use mail out/mail back survey forms to collect data. Employer companies will be mailed one of three forms based on their diversity of operations and number of industries with payroll. Companies that operate in only one industry will receive an ACE–1 (S) form. Companies that operate in more than one but less than nine industries will receive an ACE–1 (M) form. And, companies that operate in nine or more industries will receive an ACE–1 (L) form. Respondent companies are permitted to respond via facsimile machine to our toll-free number. Companies will be asked to respond to the survey within 30 days of the initial mailing. Letters and/or telephone calls encouraging participation will be directed to companies that have not responded by the designated time.

III. Data

OMB Number: 0607–0782.

Form Number: ACE–1 (S), (M), (L), (Sent to employer companies reporting payroll to the Internal Revenue Service), and the ACE–2 (Sent to nonemployer companies).

Type of Review: Regular Review.

Affected Public: Businesses or other for-profit organizations, non-profit institutions, small businesses or organizations, and self-employed individuals.

Estimated Number of Respondents: Approximately 61,000 (46,000 employer companies, and 15,000 nonemployer companies).

Estimated Time Per Response: The average for all respondents is 2.4 hours. For employer companies completing form ACE–1, the range is from 2 to 16 hours, averaging 2.8 hours. For nonemployer companies completing form ACE-2, the range is from less than 1 hour to 2 hours, averaging 1 hour.

Estimated Total Annual Burden Hours: 145,000 hours.

Estimated Total Annual Cost to Respondents: $3 million.

Respondents' Obligation: Mandatory.

Legal Authority: Title 13 United States Code, Sections 182, 224, and 225.

IV. Request for Comments

Comments are invited on: (a) Whether the proposed collection of information is necessary for the proper performance of the functions of the agency, including whether the information shall have practical utility; (b) the accuracy of the agency's estimate of the burden (including hours and cost) of the proposed collection of information; (c) ways to enhance the quality, utility, and clarity of the information to be collected; and (d) ways to minimize the burden of the collection of information on respondents, including through the use of automated collection techniques or other forms of information technology.

Comments submitted in response to this notice will be summarized and/or included in the request for OMB approval of this information collection; they also will become a matter of public record.

Dated: July 30, 2002.

Madeleine Clayton,

Departmental Paperwork Clearance Officer, Office of the Chief Information Officer.

[FR Doc. 02–19519 Filed 8–1–02; 8:45 am]

BILLING CODE 3510–07–P

DEPARTMENT OF COMMERCE

Economic Development Administration

Requirements for Approved Construction Projects

ACTION: Proposed collection; comment request.

SUMMARY: The Department of Commerce as part of its continuing effort to reduce paperwork and respondent burden invites the general public and other Federal agencies to take this opportunity to comment on proposed or continuing information collections, as required by the Paperwork Reduction Act of 1994, 44 U.S.C. 3501, *et seq.*

DATES: Written comments must be submitted on or before October 1, 2002.

ADDRESSES: Direct all written comments to Madeleine Clayton, Departmental Forms Clearance Officer, Department of Commerce, Room 6608, 14th and Constitution Avenue, NW., Washington, DC 20230 or via Internet at *MClayton@doc.gov.*

FOR FURTHER INFORMATION CONTACT: Requests for additional information or copies of the information collection instruments and instructions should be directed to Patricia Flynn, Director, Operations Review and Analysis Division, Economic Development Administration, Room 7015, Washington, DC 20230, telephone (202) 482–5353.

SUPPLEMENTARY INFORMATION:

I. Abstract

The Economic Development Administration (EDA) helps our partners across the nation (states, regions, and communities) create wealth

and minimize poverty by promoting a favorable business environment to attract private capital investment and jobs through world-class capacity building, planning, infrastructure, research grants, and strategic initiatives.

This information collection is needed to monitor construction projects for compliance with Federal and other program and administrative requirements as set forth in EDA's authorizing legislation the Public Works and Economic Development Act of 1965, as amended, including the comprehensive amendments by the Economic Development Reform Act of 1998, Public Law 105–393, (PWEDA), EDA's implementing regulations at 13 CFR parts 305 and 308, and the Common Rule as set forth at 15 CFR parts 14 and 24. The *Requirements for Approved Construction Projects* manual is intended to supplement and explain the requirements that apply to Federally-assisted construction projects. The requirements are not intended to derogate, replace or negate the above cited Federal requirements. The information collected from grant recipients is used by EDA to safeguard the public's interest in the grant assets, and to promote the effective use of grant funds accomplishing the purpose for which they were granted. EDA uses information gathered to analyze and report on program performance for over 1,160 projects which at any one time are still in design or construction.

II. Method of Collection

To responsibly administer its programs and to fulfill its statutory mandate, EDA must obtain certain data to monitor project progress from the earliest stages of design to the final performance measures report following completion of construction. The data is used to determine if time schedules, contract specifications, procurement regulations, environmental regulations, civil rights regulations, bonding requirements, and financial safeguards, among others are being followed. Additionally, EDA must collect information on the jobs to be created and saved, by those that apply for and receive its assistance (applicants and recipients), and by those that create or save 15 or more jobs as a result of EDA's assistance.

III. Data

OMB Number(s): 0610–0096.
Form Number: Not Applicable.
Burden: 23,200.
Type of Review: Extension of currently approved collection.
Affected Public: EDA-funded grantees: State, local and tribal governments; community organizations; and not-for-profit organizations.
Estimated Number of Respondents: Approximately 1,160.
Estimated Time per Response: 20 hours.
Estimated Total Annual Burden Hours: 23,200.
Estimate Total Annual Cost: $928,000.

IV. Request for Comments

Comments are invited on: (a) Whether the proposed collection of information is necessary for the proper performance of the functions of the agency, including whether the information shall have practical utility; (b) the accuracy of the agency's estimate of the burden (including hours and cost) of the proposed collection of information; (c) ways to enhance the equality, utility and clarity of the information to be collected; and (d) ways to minimize the burden of the collection of information on respondents, including through the use of automated collection techniques or other forms of information technology.

Comments submitted in response to this notice will be summarized and/or included in the request for OMB approval of this information collection; they also will become a matter of public record.

Dated: July 29, 2002.

Madeleine Clayton,

Departmental Paperwork Clearance Officer, Office of the Chief Information Officer.

[FR Doc. 02–19516 Filed 8–1–02; 8:45 am]

BILLING CODE 3510–34–P

DEPARTMENT OF COMMERCE

Economic Development Administration

Proposal and Application for Federal Assistance, and Civil Rights Guidelines

ACTION: Proposed collection; comment request.

SUMMARY: The Department of Commerce, as part of its continuing effort to reduce paperwork and respondent burden, invites the general public and other Federal agencies to take this opportunity to comment on proposed or continuing information collections, as required by the Paperwork Reduction Act of 1995, 44 U.S.C. 3501, *et seq.*

DATES: Written comments must be submitted on or before October 1, 2002.

ADDRESSES: Direct all written comments to Madeleine Clayton, Departmental Paperwork Clearance Officer, Department of Commerce, Room 6608, 14th and Constitution Avenue, NW, Washington, DC 20230 (or via Internet at *MClayton@doc.gov*).

FOR FURTHER INFORMATION CONTACT: Requests for additional information or copies of the information collection instruments and instructions should be directed to Patricia Flynn, Director, Operations Review and Analysis Division, Economic Development Administration, Room 7015, Washington, DC 20230, telephone: (202) 482–5353.

SUPPLEMENTARY INFORMATION:

I. Abstract

The Economic Development Administration (EDA) provides investments that will help our partners across the nation (states, regions and communities) create wealth and minimize poverty by promoting a favorable business environment to attract private capital investment and high skill, high wage jobs through world-class capacity building, infrastructure, business assistance, research grants and strategic initiatives.

EDA's Proposal and Application for Federal Assistance, and Civil Rights Guidelines are needed to determine conformance to statutory and regulatory requirements as set forth in EDA's authorizing legislation (Public Law 105–393) and EDA's implementing regulations at 13 CFR Chapter III. EDA must obtain certain data to assess the quality of the scope of work proposed to address the pressing needs and other economic problem(s) of the area, the merits of the activity for which funding is requested, and the ability of the prospective applicant to carry out the proposed activities successfully.

II. Method of Collection

Potential applicants are responsible for demonstrating to EDA, by providing statistics and other appropriate information, the nature and level of the distress their project efforts are intended to alleviate. EDA provides funding for eligible investment activities through direct grants and cooperative agreements. The Civil Rights Guidelines are required by the Department of Justice at 28 CFR 42.404, which directs Federal agencies to publish Title VI guidelines for each type of program to which they extend financial assistance, where such guidelines would be appropriate to provide detailed information of the requirements of Title VI of the Civil Rights Act of 1964. To responsibly administer its programs, EDA must obtain certain data on the jobs to be created and saved, by those

that apply for and receive its assistance (applicants and recipients), and by those that create or save 15 or more jobs as a result of EDA's assistance.

III. Data

OMB Number(s): 0610–0094.

Agency Form Number: ED–900P, ED–900A, and ED–900R.

Type of Review: Extension of a currently approved collection.

Affected Public: State, local or Tribal Governments and not-for-profit organizations.

Estimated Number of Respondents: 1,900 (1,100 for ED–900P, 800 for ED–900 A, ED–900R and for Civil Rights Guidelines).

Estimated Time per Response: 9 burden hours for ED–900P, 48.5 burden hours for ED–900A, ED–900R, and Civil Rights Guidelines).

Estimated Total Annual Burden Hours: 48,700.

Estimated Total Annual Cost: $2,539,000.

IV. Request for Comments

Comments are invited on: (a) Whether the proposed collection of information is necessary for the proper performance of the functions of the agency, including whether the information shall have practical utility; (b) the accuracy of the agency's estimate of the burden (including hours and cost) of the proposed collection of information; (c) ways to enhance the equality, utility and clarity of the information to be collected; and (d) ways to minimize the burden of the collection of information on respondents, including through the use of automated collection techniques or other forms of information technology.

Comments submitted in response to this notice will be summarized and/or included in the request for OMB approval of this information collection; and they also will become a matter of public record.

Dated: July 29, 2002.

Madeleine G. Clayton,

Departmental Paperwork Clearance Officer, Office of the Chief Information Officer.

[FR Doc. 02–19517 Filed 8–1–02; 8:45 am]

BILLING CODE 3510–34–P

DEPARTMENT OF COMMERCE

Economic Development Administration

Notice of Petitions by Producing Firms for Determination of Eligibility To Apply for Trade Adjustment Assistance

AGENCY: Economic Development Administration (EDA), Commerce.

ACTION: To give all interested parties an opportunity to comment.

Petitions have been accepted for filing on the dates indicated from the firms listed below.

LIST OF PETITION ACTION BY TRADE ADJUSTMENT ASSISTANCE FOR PERIOD JUNE 20, 2002–JULY 16, 2002

Firm name	Address	Date petition accepted	Product
Mellano Enterprises, Inc	P.O. Box 100, San Luis Rey, CA 92068	24–Jun–2002	Foliage and cut flowers.
Performance Coating, Inc	128 E. Pioneer St., Phoenix, AZ 85040	24–Jun–2002	Relay tower components for the telecommunications industry.
SMM Management, L.L.C., dba Morris Industries.	21002 North 19th Avenue, Phoenix, AZ 85027.	01–Jul–2002	Precision metal fabrication, primarily antenna parts.
Evergreen Air Center, Inc	Pinal Air Park, Marana, AZ 85653	01–Jul–2002	Aircraft reconfiguration and rebuilding.
Marquette Tool & Die Company	3185 South Kingshighway, St. Louis	01–Jul–2002	Metal stamping dies.
Ruddock Manufacturing Co., Inc	1801 Magoffin Avenue, El Paso, TX 79901.	02–Jul–2002	Mens and womens shirts.
XTAL Technologies, Ltd	28 Mill Race Drive, Lynchburg, VA 24502.	02–Jul–2002	Freqeuency devices including crystals and filters used in the production of circuit boards.
Aerostar Aerospace Manufacturing, Inc	2011 West Peoria Avenue, Phoenix, AZ 85029.	03–Jul–2002	Aircraft undercarriage and motorcycle components.
John Dusenbery Company, Inc	220 Franklin Road, Randolph, NJ 07869.	03–Jul–2002	Slitters/re-winders which unwind, slit and rewind large reels of material.
MAFCO, Inc	1203 North 6th Street, Rogers, AR 72757.	10–Jul–2002	Cast Iron hydrants and brass well system valves.
Randolph Manufacturing Corporation	4 Danforth Drive, Easton, PA 18045	15–Jul–2002	Precision screw parts used in the automotive, electronic and OEM markets.
Faulkner Land & Livestock Co., Inc	1989 South 1875 East, Gooding, ID 83330.	15–Jul–2002	Lamb.
Ramsey Winch Company	1600 North Garnett Road, Tulsa, OK 74416.	17–Jul–2002	Winches.

The petitions were submitted pursuant to Section 251 of the Trade Act of 1974 (19 U.S.C. 2341). Consequently, the United States Department of Commerce has initiated separate investigations to determine whether increased imports into the United States of articles like or directly competitive with those produced by each firm contributed importantly to total or partial separation of the firm's workers, or threat thereof, and to a decrease in sales or production of each petitioning firm.

Any party having a substantial interest in the proceedings may request a public hearing on the matter. A request for a hearing must be received by Trade Adjustment Assistance, Room 7315, Economic Development Administration, U.S. Department of Commerce, Washington, DC 20230, no later than the close of business of the tenth calendar day following the publication of this notice.

The Catalog of Federal Domestic Assistance official program number and title of the program under which these petitions are submitted is 11.313, Trade Adjustment Assistance.

Dated: July 25, 2002.

Anthony J. Meyer,

Coordinator, Trade Adjustment and Technical Assistance.

[FR Doc. 02–19510 Filed 8–1–02; 8:45 am]

BILLING CODE 3510–24–P

DEPARTMENT OF COMMERCE

International Trade Administration

Antidumping and Countervailing Duties, Procedures for Initiation of Downstream Product Monitoring

ACTION: Proposed collection; comment request.

SUMMARY: The Department of Commerce, as part of its continuing effort to reduce paperwork and respondent burdens, invites the general public and other Federal agencies to take this opportunity to comment on the continuing information collections, as required by the Paperwork Reduction Act of 1995, Public Law 104–13 (44 U.S.C. 3506(c)(2)(A)).

DATES: Written comments must be submitted on or before October 1, 2002.

ADDRESSES: Direct all written comments to Madeleine Clayton, Departmental Paperwork Clearance Officer, (202) 482–3129, Department of Commerce, Room 6608, 14th & Constitution Avenue, NW., Washington, DC 20230 or via the Internet at *MClayton@doc.gov.*

FOR FURTHER INFORMATION CONTACT: Request for additional information or copies of the information collection instrument and instructions should be directed to: Jeffrey May, Import Administration, Office of Policy, Room 3713, 14th & Constitution Avenue, NW., Washington, DC 20230; Phone number: (202) 482–3693, and fax number: (202) 482–4412.

SUPPLEMENTARY INFORMATION:

I. Abstract

The International Trade Administration's (ITA), Import Administration, AD/CVD Enforcement, implements the U.S. antidumping and countervailing duty law. Under section 1320 of the Omnibus Trade and Competitiveness Act of 1988, a domestic producer of an article that is like a component part of a downstream product may petition the Department of Commerce to designate the downstream product for monitoring. Section 1320, and the Department's rule 19 CFR 351.223, requires that the petition identify the downstream product to be monitored, the relevant component part, and the likely diversion of foreign exports of the component part into increased exports of the downstream product to the United States. ITA will evaluate the petition and will issue either an affirmative or negative ''monitoring'' determination.

II. Method of Collection

Form ITA–4119P is sent by request to potential U.S. petitioners.

III. Data

OMB Number: 0625–0200.
Form Number: ITA–4119P.
Type of Review: Regular Submission.
Affected Public: U.S. companies or industries that suspect the presence of unfair competition from foreign firms selling merchandise in the United States below fair value.
Estimated Number of Respondents: 1.
Estimated Time Per Response: 15 hours.
Estimated Total Annual Burden Hours: 15 hours.
Estimated Total Annual Costs: The estimated annual cost for this collection is $3,450 ($2,250 for respondents and $1,400 for federal government).

IV. Request for Comments

Comments are invited on (a) whether the proposed collection of information is necessary for the proper performance of the functions of the agency, including whether the information shall have practical utility; (b) the accuracy of the agency's estimate of the burden (including hours and costs) of the proposed collection of information; (c) ways to enhance the quality, utility, and clarity of the information to be collected; and (d) ways to minimize the burden of the collection of information on respondents, including through the use of automated collection techniques or forms of information technology.

Comments submitted in response to this notice will be summarized and/or included in the request for OMB approval of this information collection; they also will become a matter of public record.

Dated: July 29, 2002.

Madeleine Clayton,

Departmental Paperwork Clearance Officer, Office of the Chief Information Officer.

[FR Doc. 02–19518 Filed 8–1–02; 8:45 am]

BILLING CODE 3510–DA–P

DEPARTMENT OF COMMERCE

International Trade Administration

Notice of Initiation of Five-Year (''Sunset'') Review of Antidumping Duty Order on Freshwater Crawfish Tail Meat from the People's Republic of China

AGENCY: Import Administration, International Trade Administration, Department of Commerce.

SUMMARY: In accordance with section 751(c) of the Tariff Act of 1930, as amended (''the Act''), the Department of Commerce (''the Department'') is automatically initiating a five-year (''sunset'') review of the antidumping duty order listed below. The International Trade Commission (''the Commission'') is publishing concurrently with this notice its notice of *Institution of Five-Year Review* covering this same antidumping duty order.

FOR FURTHER INFORMATION CONTACT: James P. Maeder or Amir R. Eftekhari, Office of Policy, Import Administration, International Trade Administration, U.S. Department of Commerce, at (202) 482–3330 or (202) 482–5331, respectively, or Mary Messer, Office of Investigations, U.S. International Trade Commission, at (202) 205–3193.

SUPPLEMENTARY INFORMATION:

The Applicable Statue

Unless otherwise indicated, all citations to the Tariff Act of 1930, as amended (the ''Act''), are references to the provisions effective January 1, 1995, the effective date of the amendments made to the Act by the Uruguay Round Agreements Act (''URAA''). In addition, unless otherwise indicated, all citations to the Department regulations are to 19 CFR part 351 (2001). Pursuant to sections 751(c) and 752 of the Act, an antidumping (''AD'') or countervailing duty (''CVD'') order will be revoked, or the suspended investigation will be terminated, unless revocation or termination would be likely to lead to continuation or recurrence of (1) dumping or a countervailable subsidy, and (2) material injury to the domestic industry.

The Department's procedures for the conduct of sunset reviews are set forth in 19 CFR 351.218. Guidance on methodological or analytical issues relevant to the Department's conduct of sunset reviews is set forth in the Department's Policy Bulletin 98:3 -- Policies Regarding the Conduct of Five-year (''Sunset'') Reviews of Antidumping and Countervailing Duty Orders; Policy Bulletin, 63 FR 18871 (April 16, 1998) (''Sunset Policy Bulletin'').

Background:

Initiation of Review

In accordance with 19 CFR 351.218 we are initiating a sunset review of the following antidumping duty order:

DOC Case No.	ITC Case No.	Country	Product
A–570–848	731–TA–752	China	Freshwater Crawfish Tail Meat

Filing Information

As a courtesy, we are making information related to sunset proceedings, including copies of the *Sunset Regulations* (19 CFR 351.218) and *Sunset Policy Bulletin*, the Department's schedule of sunset reviews, case history information (*i.e.*, previous margins, duty absorption determinations, scope language, import volumes), and service lists, available to the public on the Department's sunset Internet website at the following address: ''http://ia.ita.doc.gov/sunset/''.

All submissions in this sunset review must be filed in accordance with the Department's regulations regarding format, translation, service, and certification of documents. These rules can be found at 19 CFR 351.303. Also, we suggest that parties check the Department's sunset website for any updates to the service list before filing any submissions. The Department will make additions to and/or deletions from the service list provided on the sunset website based on notifications from parties and participation in this review. Specifically, the Department will delete from the service list all parties that do not submit a substantive response to the notice of initiation.

Because deadlines in a sunset review are, in many instances, very short, we urge interested parties to apply for access to proprietary information under administrative protective order (''APO'') immediately following publication in the Federal Register of the notice of initiation of the sunset review. The Department's regulations on submission of proprietary information and eligibility to receive access to business proprietary information under APO can be found at 19 CFR 351.304–306.

Information Required from Interested Parties:

Domestic interested parties (defined in 19 CFR 351.102) wishing to participate in this sunset review must respond not later than 15 days after the date of publication in the **Federal Register** of the notice of initiation by filing a notice of intent to participate. The required contents of the notice of intent to participate are set forth at 19 CFR 351.218(d)(1)(ii). In accordance with the Department's regulations, if we do not receive a notice of intent to participate from at least one domestic interested party by the 15–day deadline, the Department will automatically revoke the order without further review.

If we receive an order-specific notice of intent to participate from a domestic interested party, the Department's regulations provide that *all parties* wishing to participate in the sunset review must file substantive responses not later than 30 days after the date of publication in the **Federal Register** of the notice of initiation. The required contents of a substantive response, on an order-specific basis, are set forth at 19 CFR 351.218(d)(3). Note that certain information requirements differ for respondent and domestic interested parties. Also, note that the Department's information requirements are distinct from the International Trade Commission's information requirements. Please consult the Department's regulations for information regarding the Department's conduct of sunset reviews.[1] Please consult the Department's regulations at 19 CFR Part 351 for definitions of terms and for other general information concerning antidumping and countervailing duty proceedings at the Department.

This notice of initiation is being published in accordance with section 751(c) of the Act and 19 CFR 351.218(c).

Dated: July 26, 2002.

Bernard T. Carreau,

Acting Assistant Secretary for Import Administration.

[FR Doc. 02–19543 Filed 8–1–02; 8:45 am]

BILLING CODE 3510–DS–S

[1] A number of parties commented that these interim-final regulations provided insufficient time for rebuttals to substantive responses to a notice of initiation, 19 CFR 351.218(d)(4)). As provided in 19 CFR 351.302(b), the Department will consider individual requests for extension of that five-day deadline based upon a showing of good cause.

DEPARTMENT OF COMMERCE

International Trade Administration

A–475–824

Notice of Extension of Time Limit of the Preliminary Results of Antidumping Duty Administrative Review: Stainless Steel Sheet and Strip in Coils from Italy

AGENCY: Import Administration, International Trade Administration, Department of Commerce.

ACTION: Notice of extension of time limit of the preliminary results of the antidumping duty administrative review of stainless steel sheet and strip in coils from Italy.

SUMMARY: The Department of Commerce (''the Department'') is extending the time limit of the preliminary results of the antidumping duty administrative review of stainless steel sheet and strip in coils from Italy.

EFFECTIVE DATE: August 2, 2002.

FOR FURTHER INFORMATION CONTACT: Robert Bolling at 202–482–3434, Import Administration, International Trade Administration, U.S. Department of Commerce, 1401 Constitution Avenue, NW., Washington, DC 20230.

SUPPLEMENTARY INFORMATION:

Applicable Statute and Regulations

Unless otherwise indicated, all citations to the Tariff Act of 1930, as amended (''Act''), are references to the provisions effective January 1, 1995, the effective date of the amendments made to the Act by the Uruguay Round Agreements Act (''URAA''). In addition, unless otherwise indicated, all citations to the Department's regulations are to the regulations codified at 19 C.F.R. Part 351 (2001).

Background

On July 2, 2001, the Department published a notice of opportunity to request an administrative review of the antidumping duty order on stainless steel sheet and strip in coils from Italy. *See Antidumping or Countervailing Duty Order, Finding, or Suspended Investigation; Opportunity to Request Administrative Review*, 66 FR 34910 (July 2, 2001). On July 31, 2001, ThyssenKrupp Acciai Speciali Terni S.p.A.[1] (''TKAST''), an Italian producer of subject merchandise, its affiliate, ThyssenKrupp AST USA[2] (''TKAST USA''), a U.S. importer of subject merchandise, and the petitioners from the original investigation requested the Department conduct an administrative review. On August 20, 2001, the Department published a notice of initiation of an administrative review of the antidumping duty order on subject merchandise, for the period July 1, 2000 through June 30, 2001. *See Initiation of Antidumping and Countervailing Duty Administrative Reviews and Requests for Revocation in Part*, 66 FR 43570 (August 20, 2001). On February 26,

[1] Formerly ''Acciai Speciali Terni S.p.A.''.

[2] Formerly ''Acciai Speciali Terni USA, Inc.''.

2002, the Department extended the time limit for the preliminary results of this administrative review. *See Notice of Extension of Time Limit of the Preliminary Results of Antidumping Duty Administrative Review: Stainless Steel Sheet and Strip in Coils from Italy*, 67 FR 9960 (March 5, 2002). On May 13, 2002, the Department extended the time limit for the preliminary results of this administrative review. *See Notice of Extension of Time Limit of the Preliminary Results of Antidumping Duty Administrative Review: Stainless Steel Sheet and Strip in Coils from Italy*, 67 FR 32015 (May 13, 2002). The preliminary results of this administrative review are currently due no later than July 31, 2002.

Extension of Time Limit for Preliminary Results

Pursuant to section 751(a)(3)(A) of the Act, and section 351.213(h)(2) of the Department's regulations, the Department may extend the deadline for completion of the preliminary results of a review if it determines that it is not practicable to complete the preliminary results within the statutory time limit of 245 days from the date on which the review was initiated. Due to the complexity of issues present in this administrative review, such as home market affiliated downstream sales, constructed export price versus export price, selling expenses, and complicated cost accounting issues, the Department has determined that it is not practicable to complete this review within the original time period provided in section 751(a)(3)(A) of the Act and section 351.213(h)(2) of the Department's regulations. Therefore, we are extending the due date for the preliminary results, until no later than July 31, 2002. The final results continue to be due 120 days after the publication of the preliminary results.

Dated: July 26, 2002.

Barbara E. Tillman,

Acting Deputy Assistant Secretary for Import Administration, Group III.

[FR Doc. 02–19545 Filed 8–1–02; 8:45 am]

BILLING CODE 3510–DS–S

DEPARTMENT OF COMMERCE

Technology Administration

Technology Administration Performance Review Board Membership

The Technology Administration Performance Review Board (TA PRB) reviews performance appraisals, agreements, and recommended actions pertaining to employees in the Senior Executive Service and reviews performance-related pay increases for ST–3104 employees. The Board makes recommendations to the appropriate appointing authority concerning such matters so as to ensure the fair and equitable treatment of these individuals.

This notice lists the membership of the TA PRB and supersedes the list published in **Federal Register** Document 01–29675, Vol. 66, No. 230, page 59575, dated November 29, 2001.

Cathleen Campbell (C), Director of International Technology, Policy and Programs, Technology Administration, Washington, DC 20230, *Appointment Expires:* 12/31/02 (General).

Charles Clark (C), Chief, Electron & Optical Physics Division, Physics Laboratory, National Institute of Standards & Technology, Gaithersburg, MD 20899, *Appointment Expires:* 12/31/04 (Limited).

Belinda L. Collins (C), Deputy Director for Technology Services, National Institute of Standards & Technology, Gaithersburg, MD 20899, *Appointment Expires:* 12/31/04 (Limited).

Stephen Freiman (C), Deputy Director, Materials Science & Engineering Laboratory, National Institute of Standards & Technology, Gaithersburg, MD 20899, *Appointment Expires:* 12/31/04 (Limited).

Daniel Hurley (C), Director of Communication and Information, Infrastructure Assurance Program, National Telecommunications and Information Administration, Washington, DC 20230, *Appointment Expires:* 12/31/03 (General).

Richard K. Kayser (C), Director for Technology Services, National Institute of Standards & Technology, Gaithersburg, MD 20899, *Appointment Expires:* 12/31/04 (General).

William F. Koch (C), Deputy Director, Chemical Science & Technology Laboratory, National Institute of Standards & Technology, Gaithersburg, MD 20899, *Appointment Expires:* 12/31/04 (Limited).

Willie E. May (C), Chief, Analytical Chemistry Division, Chemical Science & Technology Laboratory, National Institute of Standards & Technology, Gaithersburg, MD 20899, *Appointment Expires:* 12/31/04 (Limited).

Robert F. Moore (C), Deputy Director for Safety and Facilities, National Institute of Standards & Technology, Gaithersburg, MD 20899–3200, *Appointment Expires:* 12/31/03 (Limited).

Tyra Dent Smith (C), Chief, Human Resources Division, Census Bureau, Washington, DC 20233, *Appointment Expires:* 12/31/04 (Limited).

John F. Sopko (C), National Technical Information Service, Springfield, VA 22161, *Appointment Expires:* 12/31/04 (General).

Dennis Swyt (C), Chief, Precision Engineering Division, Manufacturing Engineering Laboratory, National Institute of Standards & Technology, Gaithersburg, MD 20899–8210, *Appointment Expires:* 12/31/04 (General).

Kathleen Taylor (C), Chief, Employment and Labor Law Division, Assistant General Counsel for Administration, Office of the General Counsel, Office of the Secretary, Washington, DC 20230, *Appointment Expires:* 12/31/03 (General).

Susan Zevin (C), Deputy Director, Information Technology Laboratory, Information Technology Laboratory, National Institute of Standards & Technology, Gaithersburg, MD 20899–8900, *Appointment Expires:* 12/31/02 (Limited).

Dated: July 24, 2002.

Benjamin H. Wu,

Deputy Under Secretary of Commerce for Technology, Technology Administration, Department of Commerce.

[FR Doc. 02–19569 Filed 8–1–02; 8:45 am]

BILLING CODE 3510–18–M

COMMITTEE FOR THE IMPLEMENTATION OF TEXTILE AGREEMENTS

Request for Public Comments on Short Supply Request under the United States-Caribbean Basin Trade Partnership Act (CBTPA)

July 30, 2002.

AGENCY: Committee for the Implementation of Textile Agreements (CITA).

ACTION: Request for public comments concerning a request for a determination that certain 100 percent stock-dyed worsted wool woven fabric, used in the production of certain men's suits and suit jackets, cannot be supplied by the domestic industry in commercial quantities in a timely manner under the CBTPA.

SUMMARY: On July 19, 2002 the Chairman of CITA received a request from Oxford Industries, Inc., alleging that certain 100 percent worsted (i.e.,

combed) wool woven fabric, stock-dyed (not piece-dyed) of wool yarns with an average fiber diameter of more than 18.5 microns, classified in subheading 5112.19.95 of the Harmonized Tariff Schedule of the United States (HTSUS), for use in the production of men's suit-type jackets for suits classified in subheading 6203.31.9010 of the HTSUS and men's suits classified in subheading 6203.11.9000 of the HTSUS but excluding ''morning dress'', ''evening dress'' and ''dinner jacket suits'' (as defined in Note 3 (a) to Chapter 62 of the HTSUS), cannot be supplied by the domestic industry in commercial quantities in a timely manner. It requests that these apparel articles of such fabrics be eligible for preferential treatment under the CBTPA. CITA hereby solicits public comments on this request, in particular with regard to whether such fabrics can be supplied by the domestic industry in commercial quantities in a timely manner. To be insured a full consideration, comments must be submitted by August 19, 2002, to the Chairman, Committee for the Implementation of Textile Agreements, Room 3001, United States Department of Commerce, 14th and Constitution Avenue, NW. Washington, DC 20230.

FOR FURTHER INFORMATION CONTACT: Richard Stetson, International Trade Specialist, Office of Textiles and Apparel, U.S. Department of Commerce, (202) 482-3400.

SUPPLEMENTARY INFORMATION:

Authority: Section 213(b)(2)(A)(v)(II) of the Carribean Basin Economic Recovery Act, as added by Section 211(a) of the CBTPA; Section 6 of Executive Order No. 13191 of January 17, 2001.

Background

The CBTPA provides for quota- and duty-free treatment for qualifying textile and apparel products. Such treatment is generally limited to products manufactured from yarns and fabrics formed in the United States or a beneficiary country. The CBTPA also provides for quota- and duty-free treatment for apparel articles that are both cut (or knit-to-shape) and sewn or otherwise assembled in one or more CBTPA beneficiary countries from fabric or yarn that is not formed in the United States or a beneficiary country, if it has been determined that such fabric or yarn cannot be supplied by the domestic industry in commercial quantities in a timely manner. In Executive Order No. 13191, the President delegated to CITA the authority to determine whether yarns or fabrics cannot be supplied by the domestic industry in commercial quantities in a timely manner under the CBTPA and directed CITA to establish procedures to ensure appropriate public participation in any such determination. On March 6, 2001, CITA published procedures that it will follow in considering requests. (66 FR 13502).

On July 19, 2002, the Chairman of CITA received a request from Oxford Industries, Inc., alleging that certain 100 percent worsted (i.e., combed) wool woven fabric stock-dyed (not piece-dyed) of wool yarns with an average fiber diameter of more than 18.5 microns, classified in subheading 5112.19.95 of the HTSUS, for use in the production of men's suit-type jackets for suits classified in subheading 6203.31.9010 of the HTSUS and men's suits classified in subheading 6203.11.9000 of the HTSUS but excluding ''morning dress'', ''evening dress'' and ''dinner jacket suits'' (as defined in Note 3 (a) to Chapter 62 of the HTSUS), cannot be supplied by the domestic industry in commercial quantities in a timely manner and requesting quota- and duty-free treatment under the CBTPA for these apparel articles that are both cut and sewn in one or more CBTPA beneficiary countries from such fabrics.

CITA is soliciting public comments regarding this request, particularly with respect to whether these fabrics can be supplied by the domestic industry in commercial quantities in a timely manner. Also relevant is whether other fabrics that are supplied by the domestic industry in commercial quantities in a timely manner are substitutable for these fabrics for purposes of the intended use. To be insured a full consideration, comments must be received no later than August 19, 2002. Interested persons are invited to submit six copies of such comments or information to the Chairman, Committee for the Implementation of Textile Agreements, room 3100, U.S. Department of Commerce, 14th and Constitution Avenue, N.W., Washington, DC 20230.

If a comment alleges that these fabrics can be supplied by the domestic industry in commercial quantities in a timely manner, CITA will closely review any supporting documentation, such as a signed statement by a manufacturer of the fabrics stating that it produces the fabrics that are the subject of the request, including the quantities that can be supplied and the time necessary to fill an order, as well as any relevant information regarding past production.

CITA will protect any business confidential information that is marked business confidential from disclosure to the full extent permitted by law. CITA will make available to the public non-confidential versions of the request and non-confidential versions of any public comments received with respect to a request in room 3100 in the Herbert Hoover Building, 14th and Constitution Avenue, N.W., Washington, DC 20230. Persons submitting comments on a request are encouraged to include a non-confidential version and a non-confidential summary.

D. Michael Hutchinson,

Acting Chairman, Committee for the Implementation of Textile Agreements.

[FR Doc.02–19631 Filed 7–31–02; 12:12 pm]

BILLING CODE 3510–DR–S

DEPARTMENT OF DEFENSE

Waiver of 10 U.S.C. 2534 for Certain Defense Items Produced in the United Kingdom

AGENCY: Department of Defense (DoD).

ACTION: Notice of waiver of 10 U.S.C. 2534 for certain defense items produced in the United Kingdom.

SUMMARY: The Under Secretary of Defense (Acquisition, Technology, and Logistics) is waiving the limitation of 10 U.S.C. 2534 for certain defense items produced in the United Kingdom (UK). 10 U.S.C. 2534 limits DoD procurement of certain items to sources in the national technology and industrial base. The waiver will permit procurement of items enumerated from sources in the UK, unless otherwise restricted by statute.

EFFECTIVE DATE: This waiver is effective for one year, beginning August 19, 2002.

FOR FURTHER INFORMATION CONTACT: Mr. Steven Cohen, OUSD (AT&L), Director of Defense Procurement, Foreign Contracting, Room 3C762, 3060 Defense Pentagon, Washington, DC 20301–3060, telephone (703) 697–9352.

SUPPLEMENTARY INFORMATION: Subsection (a) of 10 U.S.C. 2534 provides that the Secretary of Defense may procure the items listed in that subsection only if the manufacturer of the item is part of the national technology and industrial base. Subsection (i) of 10 U.S.C. 2534 authorizes the Secretary of Defense to exercise the waiver authority in subsection (d), on the basis of the applicability of paragraph (2) or (3) of that subsection, only if the waiver is made for a particular item listed in subsection (a) and for a particular foreign country. Subsection (d) authorizes a waiver if the Secretary determines that application of the limitation ''would impede the reciprocal

procurement of defense items under a memorandum of understanding providing for reciprocal procurement of defense items'' and if he determines that ''that country does not discriminate against defense items produced in the United States to a greater degree than the United States discriminates against defense items produced in that country.'' The Secretary of Defense has delegated the waiver authority of 10 U.S.C. 2534(d) to the Under Secretary of Defense (Acquisition, Technology, and Logistics).

DoD has a reciprocal procurement Memorandum of Understanding (MOU) with the UK that was signed on December 13, 1994.

The Under Secretary of Defense (Acquisition, Technology, and Logistics) finds that the UK does not discriminate against defense items produced in the United States to a greater degree than the United States discriminates against defense items produced in the UK, and also finds that application of the limitation in 10 U.S.C. 2534 against defense items produced in the UK would impede the reciprocal procurement of defense items under the MOU.

Under the authority of 10 U.S.C. 2534, the Under Secretary of Defense (Acquisition, Technology, and Logistics) has determined that application of the limitation of 10 U.S.C. 2534(a) to the procurement of any defense item produced in the UK that is listed below would impede the reciprocal procurement of defense items under the MOU with the UK.

On the basis of the foregoing, the Under Secretary of Defense (Acquisition, Technology, and Logistics) is waiving the limitation in 10 U.S.C. 2534(a) for procurements of any defense item listed below that is produced in the UK. This waiver applies only to the limitations in 10 U.S.C. 2534(a). It does not apply to any other limitation, including sections 8016 and 8065 of the DoD Appropriations Act for Fiscal Year 2002 (Public Law 107–117). This waiver applies to procurements under solicitations issued during the period from August 19, 2002, to August 18, 2003. Similar waivers were granted for the period from August 4, 1998, to August 18, 2002 (63 FR 38815, July 20, 1998; 64 FR 38896, July 20, 1999; 65 FR 47968, August 4, 2000; and 66 FR 40680, August 3, 2001). For contracts resulting from solicitations issued prior to August 4, 1998, this waiver applies to procurements of the defense items listed below under—

(1) Subcontracts entered into during the period from August 19, 2002, to August 18, 2003, provided the prime contract is modified to provide the Government adequate consideration such as lower cost or improved performance; and

(2) Options that are exercised during the period from August 19, 2002, to August 18, 2003, if the option prices are adjusted for any reason other than the application of the waiver, and if the contract is modified to provide the Government adequate consideration such as lower cost or improved performance.

List of Items to Which This Waiver Applies

1. Air circuit breakers.
2. Welded shipboard anchor and mooring chain with a diameter of four inches or less.
3. Gyrocompasses.
4. Electronic navigation chart systems.
5. Steering controls.
6. Pumps.
7. Propulsion and machinery control systems.
8. Totally enclosed lifeboats.
9. Ball and roller bearings.

Michele P. Peterson,

Executive Editor, Defense Acquisition Regulations Council.

[FR Doc. 02–19525 Filed 8–1–02; 8:45 am]

BILLING CODE 5001–08–P

DEPARTMENT OF DEFENSE

Department of the Navy

Meeting of the Naval Research Advisory Committee

AGENCY: Department of the Navy, DOD.

ACTION: Notice of closed meeting.

SUMMARY: The Naval Research Advisory Committee (NRAC) Panel on Technology for Base Security will meet to review basic and advanced research and associated science and technology opportunities with respect to the following anti-terrorism/force protection (AT/FP) issues: access control, automation, intrusion detection systems, consolidation of manpower, threat detection, counter-surveillance, situational awareness, and deterrence. From these discussions and review, the Panel will recommend appropriate naval science and technology investments both near and far term, to enhance base security. All sessions of the meeting will be closed to the public.

DATES: The meetings will be held on Tuesday, August 13, 2002, from 1 p.m. to 5:30 p.m.; Wednesday, August 14, 2002, from 8:30 a.m. to 5:30 p.m.; and Thursday, August 15, 2002, from 8:30 a.m. to 12:30 p.m.

ADDRESSES: The meetings will be held at the Office of Naval Research, 800 North Quincy Street, Arlington, Virginia.

FOR FURTHER INFORMATION CONTACT: Dennis Ryan, Program Director, Naval Research Advisory Committee, 800 North Quincy Street, Arlington, VA 22217–5660, (703) 696–6769.

SUPPLEMENTARY INFORMATION: This notice of a closed meeting is provided in accordance with the provisions of the Federal Advisory Committee Act (5 U.S.C. App. 2). All sessions of the meeting will be devoted to discussions of basic and advanced research and associated science and technology opportunities with respect to the following anti-terrorism/force protection (AT/FP) issues: access control, automation, intrusion detection systems, consolidation of manpower, threat detection, counter-surveillance, situational awareness, and deterrence. These discussions will contain classified information that is specifically authorized under criteria established by Executive Order to be kept secret in the interest of national defense and are in fact properly classified pursuant to such Executive Order. The classified and non-classified matters to be discussed are so inextricably intertwined as to preclude opening any portion of the meeting. In accordance with 5 U.S.C. App. 2, section 10(d), the Under Secretary of the Navy has determined in writing that the public interest requires that all sessions of the meeting be closed to the public because they will be concerned with matters listed in 5 U.S.C. section 552b(c)(1). Due to an unavoidable delay in administrative processing, the 15-day advance notice could not be provided.

Dated: July 30, 2002.

R.E. Vincent, II,

Lieutenant Commander, Judge Advocate General's Corps, , U.S. Navy, Federal Register Liaison Officer.

[FR Doc. 02–19619 Filed 8–1–02; 8:45 am]

BILLING CODE 3810–FF–P

DEPARTMENT OF ENERGY

Floodplain and Wetlands Statement of Findings for the Proposed Deactivation and Demolition of the Zone 13 Sewage Treatment Plant at the Pantex Plant, Amarillo, TX

AGENCY: Department of Energy (DOE).

ACTION: Floodplain and wetlands statement of findings.

SUMMARY: This is a Floodplain and Wetlands Statement of Findings for the demolition of a decommissioned sewage

treatment plant located on the Pantex Plant in Carson County, 17 miles northeast of Amarillo, Texas, in accordance with 10 CFR part 1022, Compliance with Floodplain/Wetlands Environmental Review Requirements. A floodplain and wetlands assessment was conducted that evaluated the potential impacts of this project. The floodplain and wetlands assessment describes the possible effects, alternatives, and measures designed to avoid or minimize potential harm to the floodplain and wetlands or their flood storage potential. DOE will allow 15 days of public review after publication of the Statement of Findings before implementation of the Proposed Action.

FOR FURTHER INFORMATION CONTACT: Brenda G. Finley, Public Affairs Officer, U.S. DOE/NNSA, Office of Amarillo Site Operations, P.O. Box 30020, Amarillo, Texas 79120–0020, (806) 477–3120, (806) 477–6641 (FAX).

For Further Information on General DOE Floodplain/Wetlands Environmental Review Requirements, Contact: Carol M. Borgstrom, Director, Office of NEPA Policy and Compliance, U.S. Department of Energy, 1000 Independence Avenue, SW., Washington, DC 20585, (202) 586–4600, (800) 472–2756.

SUPPLEMENTARY INFORMATION: A notice of Floodplain and Wetlands Involvement for the Proposed Deactivation and Demolition of the Zone 13 Sewage Treatment Plant at the Pantex Plant was published in the **Federal Register** on April 15, 2002 (67 FR 18182); and, subsequently, a floodplain and wetlands assessment was prepared. The floodplain and wetlands assessment documented the floodplain and wetlands communities that have the potential to be affected by the demolition of the Zone 13 Sewage Treatment Plant. Alternatives considered include: (1) removing and disposing of abandoned equipment and piping; razing the buildings, roads, and associated structures; disposing of all waste; returning the land to the original grade, and re-establishing vegetation (the Preferred Alternative), and (2) no action.

With the Preferred Alternative, some minor short-term impacts could occur during demolition and grading, which would be associated with stormwater runoff and erosion of soil particles. To mitigate these potential effects, erosion control measures will be installed during demolition and grading activities; and will remain in place until vegetative cover is established on 75 percent of the disturbed area. Potential long-term impacts to the wetland are associated with contaminants of concern entrained in building materials or sediments confined to below grade sumps. Because these materials are currently confined, and can be well controlled during demolition, the potential for being transported to the wetlands is limited to receding floodwaters that could inundate the area during demolition. To mitigate this potential negative effect, the existing tailwater pit will be used to control rising waters; and may have a pump installed to keep water from building up in the tailwater pit. The tailwater pit has enough volume to contain 1.26 acre feet of stormwater. The controls on the tailwater pit will remain operational until demolition activities are completed. Equipment and materials used during demolition and grading will be staged in an area outside the floodplain. This proposed action complies with State and local floodplain requirements.

Issued in Amarillo, Texas, on July 10, 2002.

Jerry S. Johnson,

Associate Director for Environmental & Site Engineering Programs.

[FR Doc. 02–19520 Filed 8–1–02; 8:45 am]

BILLING CODE 6450–01–P

DEPARTMENT OF ENERGY

Federal Energy Regulatory Commission

[Docket No. CP02–409–000]

ANR Storage Company; Notice of Application

July 29, 2002.

Take notice that on July17, 2002, ANR Storage Company (ANR Storage), 9 E Greenway Plaza, Houston, Texas 77046, filed in the captioned docket an application for a certificate of public convenience and necessity and related authorizations pursuant to section 7 of the Natural Gas Act (NGA), as amended, and the Commission's Rules and Regulations thereunder, requesting that the Commission issue an order authorizing ANR Storage to make the well modifications as described in its application.

ANR Storage states that it does not seek to increase the existing certificated storage capacity or injection/withdrawal deliverability of its facility. ANR Storage's proposed activities will improve operational efficiency of its storage reservoir within existing certificated limits. While ANR Storage has met all of its customer requests for service since the Excelsior 6 field has been in operation, attempts have been made to improve deliverability from the west reef, including various replacements. However, working gas remains stranded at free flow conditions due to a lack of processing facilities to remove hydrocarbon liquids from the gas stream. This effectively excludes utilization of compressors for withdrawal, resulting in an inability to cycle an additional 4.0 Bcf of combined working gas. Consequently, ANR Storage proposes to drill several lateral extensions from the boreholes of two wells in order to enhance deliverability during the withdrawal season, and to install gas cooling and separation equipment at the Excelsior station, which will enable the use of compression withdrawal. These modifications will increase Excelsior 6 and Cold Springs 31 late-season deliverability and ability to cycle working gas, while remaining within the certificated limits of 200 Mmcfd.

More specifically, ANR Storage requests authorization to—

(i) drill several lateral extensions from the well bores of two existing wells in the Excelsior 6/East Kalkaska 1 storage fields towards zones of high porosity and permeability in the west reef; and

(ii) install gas cooling and separation equipment at the Excelsior station in Kalkaska County, Michigan for the purposes of removing hydrocarbon liquids from the gas stream;

at a total capital cost of $4,397,400, all as more thoroughly described in the application on file with the Commission and open to public inspection. ANR Storage also requests that this application be disposed of in accordance with the shortened procedures set forth in Rules 801 and 802 of the Commission's Rules of Practice and Procedure. ANR Storage requests that the intermediate decision procedure be omitted and waives oral hearing, and requests that the Commission grant such other and further authorizations, relief and/or waivers as the Commission deems necessary to enable ANR Storage to complete the project as proposed.

This filing may be viewed on the Web at *http://www.ferc.gov*. Using the ''RIMS'' link, select ''Docket#'' and follow the instructions (please call (202)208–2222 for assistance). Any questions regarding this application should be directed to Dawn A. McGuire, Attorney, 9 E Greenway Plaza, Houston, Texas 77046, (832) 676–5503.

ANR Storage states that no new rates or rate schedules are being proposed, and that it will charge rates as currently set forth in its tariff for any service that utilizes the proposed facilities. Further,

ANR Storage is not requesting any change to the Maximum Daily Withdrawal Quantity and Maximum Daily Injection Quantity from the currently authorized levels.

There are two ways to become involved in the Commission's review of this project. First, any person wishing to obtain legal status by becoming a party to the proceedings for this project should, on or before August 19, 2002, file with the Federal Energy Regulatory Commission, 888 First Street, NE, Washington, DC 20426, a motion to intervene in accordance with the requirements of the Commission's Rules of Practice and Procedure (18 CFR 385.214 or 385.211) and the Regulations under the NGA (18 CFR 157.10). A person obtaining party status will be placed on the service list maintained by the Secretary of the Commission and will receive copies of all documents filed by the applicant and by all other parties. A party must submit 14 copies of filings made with the Commission and must mail a copy to the applicant and to every other party in the proceeding. Only parties to the proceeding can ask for court review of Commission orders in the proceeding.

However, a person does not have to intervene in order to have comments considered. The second way to participate is by filing with the Secretary of the Commission, as soon as possible, an original and two copies of comments in support of or in opposition to this project. The Commission will consider these comments in determining the appropriate action to be taken, but the filing of a comment alone will not serve to make the filer a party to the proceeding. The Commission's rules require that persons filing comments in opposition to the project provide copies of their protests only to the party or parties directly involved in the protest.

Persons who wish to comment only on the environmental review of this project should submit an original and two copies of their comments to the Secretary of the Commission. Environmental commenters will be placed on the Commission's environmental mailing list, will receive copies of the environmental documents, and will be notified of meetings associated with the Commission's environmental review process. Environmental commenters will not be required to serve copies of filed documents on all other parties. However, the non-party commenters will not receive copies of all documents filed by other parties or issued by the Commission (except for the mailing of environmental documents issued by the Commission) and will not have the right to seek court review of the Commission's final order.

The Commission may issue a preliminary determination on non-environmental issues prior to the completion of its review of the environmental aspects of the project. This preliminary determination typically considers such issues as the need for the project and its economic effect on existing customers of the applicant, on other pipelines in the area, and on landowners and communities. For example, the Commission considers the extent to which the applicant may need to exercise eminent domain to obtain rights-of-way for the proposed project and balances that against the non-environmental benefits to be provided by the project. Therefore, if a person has comments on community and landowner impacts from this proposal, it is important either to file comments or to intervene as early in the process as possible.

Comments, protests, and interventions may be filed electronically via the internet in lieu of paper. *See*, 18 CFR 385.2001(a)(1)(iii) and the instructions on the Commission's Web site under the ''e-Filing'' link.

If the Commission decides to set the application for a formal hearing before an Administrative Law Judge, the Commission will issue another notice describing that process. At the end of the Commission's review process, a final Commission order approving or denying a certificate will be issued.

Linwood A. Watson, Jr.,

Deputy Secretary.

[FR Doc. 02–19508 Filed 8–1–02; 8:45 am]

BILLING CODE 6717–01–P

DEPARTMENT OF ENERGY

Federal Energy Regulatory Commission

[Docket Nos. EL00–95–000, EL00–98–000, and ER02–1656–000]

San Diego Gas & Electric Company, Complainant, v. Sellers of Energy and Ancillary Services Into Markets Operated by the California Independent System Operator and the California Power Exchange, Respondents; Investigation of Practices of the California Independent System Operator and the California Power Exchange; California Independent System Operator (MD02); Notice of Technical Conference

July 29, 2002.

As directed by the Commission order issued on July 17, 2002 in Docket No. ER02–165–000 and EL01–68–017, 100 FERC ¶ 61,060, the Federal Energy Regulatory Commission Staff is convening a technical conference to facilitate continued discussions between the California Independent System Operator Corporation (CAISO), market participants, state agencies and other interested participants on the development of a revised market design for the CAISO. Staff will issue an agenda the week of August 5, 2002. The conference will be held in San Francisco, California, at the Renaissance Parc 55 Hotel, 55 Cyril Magnin Street, San Francisco, CA, on August 13, 14 and 15, 2002, beginning at 9 a.m.

For additional information concerning the conference, interested persons may contact Susan G. Pollonais at (202) 208–0011 or by electronic mail at *susan.pollonais@ferc.gov*. No telephone communication bridge will be provided at this technical conference.

Linwood A. Watson, Jr.,

Deputy Secretary.

[FR Doc. 02–19509 Filed 8–1–02; 8:45 am]

BILLING CODE 6717–01–P

DEPARTMENT OF ENERGY

Federal Energy Regulatory Commission

[Docket No. ER02–851–000]

Southern Company Services, Inc.; Notice of Non-Disclosure Agreement at Technical Conference

July 26, 2002.

On July 5, 2002, notice was issued that a technical conference will be held in the above-captioned matter on Wednesday, August 7, 2002 at 9:30 a.m.

and that the conference may continue on Thursday, August 8, 2002 at 9:30 a.m. if needed. The conference is open to all interested parties and staff. The July 5, 2002 notice stated that the parties should be prepared to discuss at the technical conference the contested issues, staff's information requests, and the answers thereto.

On July 12, 2002, Southern Company Services, Inc. filed responses to staff's requests for information that included a request for confidential treatment of certain materials pursuant to section 388.112 of the Commission's regulations, 18 CFR 388.112, and under the Commission's order on critical energy infrastructure information in Docket Nos. RM02–4–000 and PL02–1–000.[1] At the upcoming August 7, 2002 technical conference, to ensure that the answers to staff's information requests may be freely discussed, all interested parties will be expected to sign the attached nondisclosure agreement as a precondition to attendance and participation.

Dated:

Linwood A. Watson, Jr.,

Deputy Secretary.

Non-Disclosure Agreement

I hereby agree that I will not disclose the non-public material divulged at the August 7–8, 2002 technical conference in this proceeding to anyone other than, as appropriate, my client, my supervisor(s), or anyone else whom I represent or to whom I report and must not engage in any communications prohibited under 18 CFR § 37.4 (2002). That person(s) in turn may not disclose the information to anyone. I understand that the contents of the non-public material, any notes or other memoranda, or any other form of information that copies or discloses this material shall not be disclosed to anyone other than as noted. I further understand that I shall use this material only in connection with this proceeding. I acknowledge that a violation of this agreement constitutes a violation of the Commission's orders in this proceeding establishing a technical conference to explore the issues. *Southern Company Services, Inc.,* 98 FERC ¶ 61,328 at 62,386, *order on reh'g,* 99 FERC ¶ 61,839 at 61,840 (2002).

By: _____

Date: _____

(Print Name) _____

Title: _____

Representing: _____

Mailing Address: _____

Telephone Number: _____

Email Address: _____

Date of Intervention: _____

[FR Doc. 02–19406 Filed 8–1–02; 8:45 am]

BILLING CODE 6717–01–P

[1] Rule Regarding Critical Energy Infrastructure Information, 67 FR 3129, FERC Stats. & Regs. ¶ 35,542 (2002).

ENVIRONMENTAL PROTECTION AGENCY

[FRL–7254–7]

Agency Information Collection Activities: Submission for OMB Review; Comment Request; Personal Exposure of High-Risk Subpopulations to Particles

AGENCY: Environmental Protection Agency (EPA).

ACTION: Notice.

SUMMARY: In compliance with the Paperwork Reduction Act (44 U.S.C. 3501 *et seq.*), this document announces that the following Information Collection Request (ICR) has been forwarded to the Office of Management and Budget (OMB) for review and approval: Personal Exposure of High-Risk Subpopulations to Particles; OMB Control Number 2080–0058, expiring July 31, 2002. The ICR describes the nature of the information collection and its expected burden and cost; where appropriate, it includes the actual data collection instrument.

DATES: Comments must be submitted on or before September 3, 2002.

ADDRESSES: Send comments, referencing EPA ICR No. 1887.02 and OMB Control No. 2080–0058, to the following addresses: Susan Auby, U.S. Environmental Protection Agency, Collection Strategies Division (Mail Code 2822T), 1200 Pennsylvania Avenue, NW., Washington, DC 20460–0001; and to Office of Information and Regulatory Affairs, Office of Management and Budget (OMB), Attention: Desk Officer for EPA, 725 17th Street, NW., Washington, DC 20503.

FOR FURTHER INFORMATION CONTACT: For a copy of the ICR contact Susan Auby at EPA by phone at (202) 566–1672, by E-mail at Auby.Susan@epamail.epa.gov, or download off the Internet at *http://www.epa.gov/icr* and refer to EPA ICR No. 1887.02. For technical questions about the ICR contact Lance Wallace, Office of Research and Development, on 703–620–4543.

SUPPLEMENTARY INFORMATION:

Title: Personal Exposure of High-Risk Subpopulations to Particles (OMB Control number 2080–0058; EPA ICR No.1887.02) expiring July 31, 2002. This is a request for extension of a currently approved collection.

Abstract: Because of the possible health effects of particulate air pollution, the Agency has a responsibility to determine the relationship of human exposure to particles with ambient air concentrations. At the urging of the National Academy of Sciences, four studies were begun in 1999 to determine personal exposure of high-risk subpopulations to particles. Three of the studies have completed data collection, but the fourth study will still be collecting data after the July 31, 2002 expiration date of the OMB-approved original questionnaire. The data will be used to help the Agency in its determination of the proper regulatory approach to ambient particles. All participation is completely voluntary. This will not involve any addition to the burden hours already approved.

An agency may not conduct or sponsor, and a person is not required to respond to, a collection of information unless it displays a currently valid OMB control number. The OMB control numbers for EPA's regulations are listed in 40 CFR part 9 and 48 CFR Chapter 15. The **Federal Register** document required under 5 CFR 1320.8(d), soliciting comments on this collection of information was published on April 2, 2002 (67 FR 15565). No comments were received.

Burden Statement: The annual public reporting and record keeping burden for this collection of information is estimated to average 20 hours per response. Burden means the total time, effort, or financial resources expended by persons to generate, maintain, retain, or disclose or provide information to or for a Federal agency. This includes the time needed to review instructions; develop, acquire, install, and utilize technology and systems for the purposes of collecting, validating, and verifying information, processing and maintaining information, and disclosing and providing information; adjust the existing ways to comply with any previously applicable instructions and requirements; train personnel to be able to respond to a collection of information; search data sources; complete and review the collection of information; and transmit or otherwise disclose the information.

Respondents/Affected Entities: Respondents with chronic obstructive pulmonary disease and cardiovascular disease.

Estimated Number of Respondents: 104

Frequency of Response: Daily for 12 days.

Estimated Total Annual Hour Burden: 2,090.

Estimated Total Annualized Capital, O&M Cost Burden: $0.

Send comments on the Agency's need for this information, the accuracy of the provided burden estimates, and any suggested methods for minimizing respondent burden, including through the use of automated collection techniques to the addresses listed above. Please refer to EPA ICR No. 1887.02 and OMB Control No. 2080–0058 in any correspondence.

Dated: July 23, 2002.

Oscar Morales,

Collection Strategies Division.

[FR Doc. 02–19564 Filed 8–1–02; 8:45 am]

BILLING CODE 6560–50–P

ENVIRONMENTAL PROTECTION AGENCY

[ER–FRL–6631–6]

Environmental Impact Statements; Notice of Availability

Responsible Agency: Office of Federal Activities, General Information (202) 564–7167 or *http://www.epa.gov/compliance/nepa/.*

Weekly receipt of Environmental Impact Statements

Filed July 22, 2002 Through July 26, 2002

Pursuant to 40 CFR 1506.9.

EIS No. 020318, FINAL EIS, BLM, CA, Northern and Eastern Colorado Desert Plan (Plan), Implementation, Comprehensive Framework for Managing Species and Habitats (BLM), Joshua Tree National Park (JTNP) and Chocolate Mountains Aerial Gunnery Range, California Desert, Riverside, Imperial and San Bernardino Counties, CA, Wait Period Ends: September 03, 2002, *Contact:* Dick Crowe (909) 697–5216.

EIS No. 020319, FINAL EIS, AFS, MT, Lolo National Forest Post Burn Management Activities, Implementation, Ninemile, Superior and Plains Ranger Districts, Mineral, Missoula, and Sanders Counties, MT, Wait Period Ends: September 03, 2002, *Contact:* Deborah L.R. Austin (406) 329–3750. This document is available on the Internet at: *http://www.fs.fed.us/r1/lolo/index.html.*

EIS No. 020320, DRAFT EIS, COE, PA, Allegheny and Ohio Rivers Commercial Sand and Gravel Dredging Operations, Granting and Extending Permits for Continuance of Dredging, Section 10 and 404 Permits, PA, *Comment Period Ends:* November 07, 2002, *Contact:* Albert H. Rogalla (412) 395–7155. This document is available on the Internet at: *http://www.lrp.usace.army.mil.*

EIS No. 020321, DRAFT EIS, USN, NC, SC, VA, Introduction of F/A 18 E/F (Super Hornet) Aircraft, Replacing the F–14 (TOMCAT) and F/A–18 C/D (Hornet) Aircraft, Homebasing and Operation, Possible Homebase Sites include Naval Air Station (NAS) Oceana, VA; Marine Corps Air Station (MCAS) Beaufort, SC; and MCAS Cherry Point, NC, *Comment Period Ends:* October 02, 2002, *Contact:* Fred Pierson (757) 322–4935. This document is available on the Internet at: *http://www.ef.aircraft.ene.com.*

EIS No. 020322, DRAFT EIS, SFW, AK, Swanson River Satellites Natural Gas Exploration and Development Project, Evaluation of a Right-of-Way Permit Application, US COE Section 10 and 404 Permits, NPDES Permit, Kenai Natural Wildlife Refuge, Kenai Peninsula, AK, *Comment Period Ends:* October 1, 2002, *Contact:* Brian Anderson (907) 786–3379.

EIS No. 020323, FINAL EIS, TVA, AL, MS, TN, Pickwick Reservoir Land Management Plan (Plan) Proposal to use the Plan to Guide Land-Use Approvals, Private Water Use Facility Permitting and Resource Management Decisions, Colbert and Lauderdale Counties, AL, and Tishomingo County, MS and Hardin County, TN, *Wait Period Ends:* September 3, 2002, *Contact:* Chellye Campbell (256) 386–3518.

EIS No. 020324, FINAL EIS, FHW, MI, I–96/Airport Area Access Study, Transportation Improvements, Surrounding the Gerald R. Ford International Airport, Kent County, MI, *Wait Period Ends:* September 3, 2002, *Contact:* James A. Kirschensteiner (517) 702–1835.

EIS No. 020325, DRAFT EIS, COE, WA, Centralia Flood Damage Reduction Project, Chehalis River, Lewis and Thurston Counties, WA, *Comment Period Ends:* September 19, 2002, *Contact:* George Hart (206) 764–3641. This document is available on the Internet at: *http://www.nws.usace.army.mil.*

Dated: July 30, 2002.

Joseph C. Montgomery,

Director, NEPA Compliance Division, Office of Federal Activities.

[FR Doc. 02–19566 Filed 8–1–02; 8:45 am]

BILLING CODE 6560–50–P

ENVIRONMENTAL PROTECTION AGENCY

[ER–FRL–6631–7]

Environmental Impact Statements and Regulations; Availability of EPA Comments

Availability of EPA comments prepared pursuant to the Environmental Review Process (ERP), under Section 309 of the Clean Air Act and Section 102(2)(c) of the National Environmental Policy Act as amended. Requests for copies of EPA comments can be directed to the Office of Federal Activities at (202) 564–7167. An explanation of the ratings assigned to draft environmental impact statements (EISs) was published in FR dated April 12, 2002 (67 FR 17992).

Final EISs

ERP No. F–AFS–J65357–MT, White Pine Creek Project, Timber Harvest, Prescribe Fire Burning, Watershed Restoration and Associated Activities, Implementation, Kootenai National Forest, Cabinet Ranger District, Sanders County, MT.

Summary: EPA expressed environmental concerns about potential impacts to water quality from 70 miles of new, temporary and reconstructed roads. EPA supports improvements to habitat and stream channels, 47 miles of road closures and other water resource mitigation measures such as harvesting using skyline cable and helicopter logging methods.

ERP No. F–BLM–K40248–AZ, Diamond Bar Road Improvement Project, Sections of Grapevine Wash, Road Pavement and Realignment, Right-of-Way Permits, Mohave County, AZ.

Summary: No formal comment letter was sent to the preparing agency.

ERP No. F–BLM–K67053–CA, Mesquite Mine Expansion Project, Expansion of the Existing Open-Pit, Heap-Leach, and Precious Metal Mine, Federal Mine Plan of Operations Approval, Conditional Use Permits Issuance and Reclamation Plan Approval, Imperial County, CA.

Summary: No formal comment letter was sent to the preparing agency.

ERP No. F–FHW–D40370–WV, WV–9 Transportation Corridor Improvements from Martinsburg to Charles Town, Funding, Berkeley, Jefferson and Morgan Counties, WV.

Summary: EPA's prior comments on the draft EIS have been adequately addressed in this document. Therefore, EPA concurs with the analysis of impacts and findings and has no objection to the action as proposed.

ERP No. F–FRC–F05123–00, Bond Falls Project, New License Issuance for an Existing Hydroelectric License, (FERC No. 1864–005) Ontonagon River Basin, Ontonagon and Gogebic Counties, MI and Vilas County, WI.

Summary: EPA has no objections to this project. The project has not changed significantly since the Draft stage.

ERP No. F–GSA–K81011–CA, Los Angeles Federal Building—U. S. Courthouse, Construction of a New Courthouse in the Civic Center, City of Los Angeles, Los Angeles County, CA.

Summary: EPA reviewed the FEIS and found that the document adequately addresses the issues raised in EPA's comment letter on the DEIS.

ERP No. F–IBR–G65070–NM, Elephant Butte and Caballo Reservoirs, Resource Management Plan (RMP), Implementation, Sierra and Socorro Counties, NM.

Summary: EPA had no further comments to offer.

ERP No. F–UAF–K11107–CA, EL Rancho Road Bridge Project, Flood-Free Crossing Construction at San Antonia Creek to access from the north of Vandenberg Air Force Base, Santa Barbara County, CA.

Summary: No formal comment letter was sent to the preparing agency.

ERP No. FS–FRC–L05053–WA, Condit Hydroelectric (No. 2342) Project, Updated Information concerning an Application to Amend the Current License to Extend the License Term to October 1, 2006, White Salmon River, Skamania and Klickitat Counties, WA.

Summary: No formal comment letter was sent to the preparing agency.

Dated: July 30, 2002.

Joseph C. Montgomery,

Director, NEPA Compliance Division, Office of Federal Activities.

[FR Doc. 02–19567 Filed 8–1–02; 8:45 am]

BILLING CODE 6560–50–P

ENVIRONMENTAL PROTECTION AGENCY

[FRL–7255–1]

Relocation of EPA Headquarter Dockets; Temporary Closures

AGENCY: Environmental Protection Agency (EPA).

ACTION: Notice.

SUMMARY: EPA is announcing the temporary closure and relocation of the Agency's Headquarter Dockets. EPA is consolidating the Headquarter paper docket facilities, that are identified in this document, into a combined docket facility to be known as the ''EPA Docket Center'' (EPA/DC). This new facility will be located in the basement of the EPA West Building at 1301 Constitution Ave., NW, Washington, DC. In order to prepare for this relocation, the various docket facilities, identified in this document, will be closed to the public at various times between the dates of Tuesday, August 13, 2002, through Monday, August 26, 2002. EPA expects each of the dockets located in the new EPA/DC to be open starting Tuesday, August 27, 2002, from the hours of 8:30 a.m. until 4:30 p.m. Eastern Standard Time (EST), or by appointment. This document provides additional details related to the relocation of EPA Headquarter dockets.

FOR FURTHER INFORMATION CONTACT: Patrick Grimm, Information Strategies Branch, Collection Strategies Division, Office of Environmental Information, Environmental Protection Agency, Mailcode 2822T, 1200 Pennsylvania Ave., NW, Washington, DC 20460; telephone number: 202–566–1677; fax number: 202–566–1639; email address: *grimm.patrick@epa.gov.*

SUPPLEMENTARY INFORMATION:

What Docket Facilities Are Affected?

In order to efficiently complete the relocation of the following physical Headquarter dockets, the docket facilities will be closed to the public as follows:

Aug. 16–26: OAR Docket (supporting the Clean Air Act [CAA])

Aug. 21–26: OECA Docket

Aug. 14–26: OEI Docket (supporting the Toxic Release Inventory [TRI])

Aug. 14–26: OPPT Docket, Non-Confidential Information Center (supporting the Toxic Substances Control Act [TSCA])

Aug. 19–26: OSWER Docket and Information Center (supporting the Resource Conservation and Recovery Act [RCRA], the Comprehensive Environmental Response, Compensation, and Liability Act [CERCLA], and the Oil Pollution Act [OPA])

Aug. 13–26: OW Docket (supporting the Clean Water Act [CWA] and the Safe Drinking Water Act [SDWA])

The Office of Pesticide Programs (OPP) Public Regulatory Docket (supporting the Federal Insecticide, Fungicide and Rodenticide Act [FIFRA]), located in Arlington, VA, is not moving at this time and will remain open to the public.

This temporary closure will enable EPA to effectively transfer docket collections, while ensuring document integrity. By moving into this consolidated environment, the Agency intends to improve the docket's internal workflow processes and enhance customer service and public access to information. A central facility for most EPA Headquarter dockets will offer the public both convenience and efficiency, enabling citizens to access multiple program dockets and conduct cross-docket searches from one location.

How Can I Submit Comments During the Closure?

During the closure, each docket will continue to receive comments via the U.S. Postal Service at the EPA Headquarters mailing address: 1200 Pennsylvania Ave., NW, Washington, DC 20460. These dockets will be closed, however, for receiving personal or courier deliveries at their current locations. During the scheduled docket closures, public comments may be submitted in person or by courier to Patrick Grimm, EPA West, Room 6146B, 1301 Constitution Ave. NW, Washington, DC. Beginning August 27, 2002, hand-delivered comments should be delivered to the new EPA Docket Center (EPA/DC), EPA West, Room B102, 1301 Constitution Ave. NW, Washington, DC. Online receipt of public comments transmitted through the Agency's electronic docket and commenting system, EPA Dockets (EDOCKET) *http://www.epa.gov/edocket,* will not be affected during the physical docket move.

How Can I Access Material in the Dockets During the Closure?

EDOCKET may contain electronic copies of support documentation and background materials for some regulatory and non-regulatory dockets. If a particular document is not available electronically, but must be viewed in person during the period of time dockets are closed, special arrangements may be made by calling the appropriate contact from the following list:

OAR Docket: Lorraine Reddick-Smith (202) 564–1293

OECA Docket: Carlton Burns (202) 564–8231

OEI Docket: Patrick Grimm (202) 566–1677

OPPT Docket: Vanessa Williams (202) 564–8957

OSWER Docket: Scott Maid (703) 308–8029

OW Docket: Gloria Posey (202) 564–0465

Since access to the docket materials may be limited given the activities associated with the relocation, EPA appreciates your patience and asks that you limit requests to true emergencies.

What Dockets Are Currently Open for Public Comment?

The following is a list of rules/notices that are expected to be open for public comment during the scheduled docket closure periods. This listing, which identifies the docket ID number for the item, is not expected to be complete and the program docket should be contacted if a more detailed and current listing of open dockets is necessary.

OAR Docket

A–2000–50: National Emission Standards for Hazardous Air Pollutants for Refractory Products Manufacturing

A–97–52: National Emission Standards for Hazardous Air Pollutants; Surface Coating of Wood Building Products

OPPT Docket

OPPT–2002–0040: Certain New Chemicals; Receipt and Status Information

OSWER Docket

RCRA–1999–0011: Management of Cement Kiln Dust—Notice of Data Availability

RCRA–2002–0019: NESHAP: Standards for Hazardous Air Pollutants for Hazardous Waste Combustors (Final Replacement Standards and Phase II)—Notice of Data Availability

RCRA–2002–0021: Agency Collection Activities: Continuing Collection; Comment Request; Notification of Regulated Waste Activity

RCRA–2002–0022: Agency Collection Activities: Proposed Collection; Comment Request; National Waste Minimization Partnership Program

RCRA–2002–0023: Agency Information Collection Activities: Continuing Collection; Comment Request; Information Collection Request for RCRA Reporting and Recordkeeping Requirements for Incinerators, Boilers and Industrial Furnaces Burning Hazardous Waste

SFUND–2002–004: Contaminated Sediments Science Plan—Notice

OW Docket

W–99–18: Standards for the Use or Disposal of Sewage Sludge

W–02–06: Effluent Limitation Guidelines and New Source Performance Standards for the Construction and Development Category

W–00–27: Notice of Data Availability; National Pollutant Discharge Elimination System Permit Regulation and Effluent Limitations Guidelines and Standards for Concentrated Animal Feeding Operations (CAFO)

Dated: July 30, 2002.

Mark Luttner,

Office of Information Collection, Office of Environmental Information.

[FR Doc. 02–19565 Filed 8–1–02; 8:45 am]

BILLING CODE 6560–50–P

ENVIRONMENTAL PROTECTION AGENCY

[OPP–2002–0134; FRL–7185–9]

Notice of Filing a Pesticide Petition to Establish a Tolerance for a Certain Pesticide Chemical in or on Food

AGENCY: Environmental Protection Agency (EPA).

ACTION: Notice.

SUMMARY: This notice announces the initial filing of a pesticide petition proposing the establishment of regulations for residues of a certain pesticide chemical in or on various food commodities.

DATES: Comments, identified by docket ID number OPP–2002–0134, must be received on or before September 3, 2002.

ADDRESSES: Comments may be submitted by mail, electronically, or in person. Please follow the detailed instructions for each method as provided in Unit I.C. of the **SUPPLEMENTARY INFORMATION**. To ensure proper receipt by EPA, it is imperative that you identify docket ID number OPP–2002–0134 in the subject line on the first page of your response.

FOR FURTHER INFORMATION CONTACT: By mail: Linda A. DeLuise, Registration Division (7505C), Office of Pesticide Programs, Environmental Protection Agency, 1200 Pennsylvania Ave., NW., Washington, DC 20460; telephone number: (703) 305–5428; e-mail address: deluise.linda@epa.gov.

SUPPLEMENTARY INFORMATION:

I. General Information

A. Does this Action Apply to Me?

You may be affected by this action if you are an agricultural producer, food manufacturer or pesticide manufacturer. Potentially affected categories and entities may include, but are not limited to:

Categories	NAICS codes	Examples of potentially affected entities
Industry	111 112 311	Crop production Animal production Food manufacturing
	32532	Pesticide manufacturing

This listing is not intended to be exhaustive, but rather provides a guide for readers regarding entities likely to be affected by this action. Other types of entities not listed in the table could also be affected. The North American Industrial Classification System (NAICS) codes have been provided to assist you and others in determining whether or not this action might apply to certain entities. If you have questions regarding the applicability of this action to a particular entity, consult the person listed under **FOR FURTHER INFORMATION CONTACT**.

B. How Can I Get Additional Information, Including Copies of this Document and Other Related Documents?

1. *Electronically*. You may obtain electronic copies of this document, and certain other related documents that might be available electronically, from the EPA Internet Home Page at http://www.epa.gov/. To access this document, on the Home Page select ''Laws and Regulations,'' ''Regulations and Proposed Rules'' and then look up the entry for this document under the ''**Federal Register**—Environmental Documents.'' You can also go directly to the **Federal Register** listings at http://www.epa.gov/fedrgstr/.

2. *In person*. The Agency has established an official record for this action under docket ID number OPP–2002–0134. The official record consists of the documents specifically referenced in this action, any public comments received during an applicable comment period, and other information related to this action, including any information claimed as Confidential Business Information (CBI). This official record includes the documents that are physically located in the docket, as well as the documents that are referenced in those documents. The public version of the official record does not include any information claimed as CBI. The public version of the official record, which includes printed, paper versions of any electronic comments submitted during an applicable comment period, is available for inspection in the Public Information and Records Integrity Branch (PIRIB), Rm. 119, Crystal Mall #2, 1921 Jefferson Davis Highway, Arlington, VA, from 8:30 a.m. to 4 p.m., Monday through Friday, excluding legal

holidays. The PIRIB telephone number is (703) 305–5805.

C. How and to Whom Do I Submit Comments?

You may submit comments through the mail, in person, or electronically. To ensure proper receipt by EPA, it is imperative that you identify docket ID number OPP–2002–0134 in the subject line on the first page of your response.

1. *By mail.* Submit your comments to: Public Information and Records Integrity Branch (PIRIB), Information Resources and Services Division (7502C), Office of Pesticide Programs (OPP), Environmental Protection Agency, 1200 Pennsylvania Ave., NW., Washington, DC 20460.

2. *In person or by courier.* Deliver your comments to: Public Information and Records Integrity Branch (PIRIB), Information Resources and Services Division (7502C), Office of Pesticide Programs (OPP), Environmental Protection Agency, Rm. 119, Crystal Mall #2, 1921 Jefferson Davis Highway, Arlington, VA. The PIRIB is open from 8:30 a.m. to 4 p.m., Monday through Friday, excluding legal holidays. The PIRIB telephone number is (703) 305–5805.

3. *Electronically.* You may submit your comments electronically by e-mail to: opp-docket@epa.gov, or you can submit a computer disk as described above. Do not submit any information electronically that you consider to be CBI. Avoid the use of special characters and any form of encryption. Electronic submissions will be accepted in Wordperfect 6.1/8.0 or ASCII file format. All comments in electronic form must be identified by docket ID number OPP–2002–0134. Electronic comments may also be filed online at many Federal Depository Libraries.

D. How Should I Handle CBI That I Want to Submit to the Agency?

Do not submit any information electronically that you consider to be CBI. You may claim information that you submit to EPA in response to this document as CBI by marking any part or all of that information as CBI. Information so marked will not be disclosed except in accordance with procedures set forth in 40 CFR part 2. In addition to one complete version of the comment that includes any information claimed as CBI, a copy of the comment that does not contain the information claimed as CBI must be submitted for inclusion in the public version of the official record. Information not marked confidential will be included in the public version of the official record without prior notice. If you have any questions about CBI or the procedures for claiming CBI, please consult the person identified under **FOR FURTHER INFORMATION CONTACT**.

E. What Should I Consider as I Prepare My Comments for EPA?

You may find the following suggestions helpful for preparing your comments:

1. Explain your views as clearly as possible.
2. Describe any assumptions that you used.
3. Provide copies of any technical information and/or data you used that support your views.
4. If you estimate potential burden or costs, explain how you arrived at the estimate that you provide.
5. Provide specific examples to illustrate your concerns.
6. Make sure to submit your comments by the deadline in this notice.
7. To ensure proper receipt by EPA, be sure to identify the docket ID number assigned o this action in the subject line on the first page of your response. You may also provide the name, date, and **Federal Register** citation.

II. What Action is the Agency Taking?

EPA has received a pesticide petition as follows proposing the establishment and/or amendment of regulations for residues of a certain pesticide chemical in or on various food commodities under section 408 of the Federal Food, Drug, and Cosmetic Act (FFDCA), 21 U.S.C. 346a. EPA has determined that this petition contains data or information regarding the elements set forth in section 408(d)(2); however, EPA has not fully evaluated the sufficiency of the submitted data at this time or whether the data support granting of the petition. Additional data may be needed before EPA rules on the petition.

List of Subjects

Environmental protection, Agricultural commodities, Feed additives, Food additives, Pesticides and pests, Reporting and recordkeeping requirements.

Dated: July 23, 2002.

Peter Caulkins,

Acting Director, Registration Division, Office of Pesticide Programs.

Summary of Petition

The petitioner summary of the pesticide petition is printed below as required by section 408(d)(3) of the FFDCA. The summary of the petition was prepared by the petitioner and represents the view of the petitioner. EPA is publishing the petition summary verbatim without editing it in any way. The petition summary announces the availability of a description of the analytical methods available to EPA for the detection and measurement of the pesticide chemical residues or an explanation of why no such method is needed.

FMC Corporation

2F6444

EPA has received a pesticide petition (2F6444) from FMC Corporation, 1735 Market Street, Philadelphia, PA 19103 proposing, pursuant to section 408(d) of the FFDCA, 21 U.S.C. 346a(d), to amend 40 CFR part 180, by establishing a tolerance for residues of zeta-cypermethrins-Cyano(3-phenoxyphenyl)methyl (±) *cis, trans* 3-(2,2-dichloroethenyl)-2,2-dimethylcyclopropanecarboxylate and its inactive isomers) in or on the raw agricultural commodities (RACs) root and tuber vegetables, roots at 0.10 part per million (ppm); peanuts at 0.05 ppm; and cucurbit vegetables at 0.10 ppm. EPA has determined that the petition contains data or information regarding the elements set forth in section 408(d)(2) of the FFDCA; however, EPA has not fully evaluated the sufficiency of the submitted data at this time or whether the data support granting of the petition. Additional data may be needed before EPA rules on the petition.

A. Residue Chemistry

1. *Plant metabolism.* The metabolism of cypermethrin in plants are adequately understood. Studies have been conducted to delineate the metabolism of radiolabelled cypermethrin in various crops all showing similar results. The residue of concern is the parent compound only.

2. *Analytical method.* There is a practical analytical method for detecting and measuring levels of cypermethrin in or on food with a limit of detection (LOD) that allows monitoring of food with residues at or 'above the levels set in these tolerances (gas chromatography with electron capture detection (GC/ECD)).

3. *Magnitude of residues.* Crop field trial residue data from studies conducted at the maximum label rates for root and tuber vegetables, peanuts, and cucurbit vegetables show that the proposed zeta-cypermethrin tolerances on root and tuber vegetables, roots at 0.10 ppm; peanuts at 0.05 ppm; and cucurbit vegetables at 0.10 ppm will not be exceeded when the zeta-cypermethrin products labeled for these uses are used as directed.

B. Toxicological Profile

1. *Acute toxicity*. For the purposes of assessing acute dietary risk, FMC Corporation has used the no observed adverse effect levels (NOAEL) at 10.0 milligram/kilograms/day (mg/kg/day) from the zeta-cypermethrin acute neurotoxicity study in rats. The lowest observed adverse effect levels (LOAEL) at 50.0 mg/kg/day was based on clinical signs. This acute dietary endpoint is used to determine acute dietary risks to all population subgroups.

2. *Genotoxicty*. The following genotoxicity tests were all negative:

i. *In vivo* chromosomal aberration in rat bone marrow cells.

ii. *In vitro* cytogenic chromosome aberration.

iii. Unscheduled DNA synthesis (UDS).

iv. Chinese hampster ovary/hypoxanthine guanine phophoribosyl transferase (CHO/HGPRT) mutagen assay; weakly mutagenic: Gene mutation (Ames).

3. *Reproductive and developmental toxicity*. No evidence of additional sensitivity to young rats was observed following prenatal or postnatal exposure to zeta-cypermethrin.

i. A 2–generation reproductive toxicity study with zeta-cypermethrin in rats demonstrated a NOAEL at 7.0 mg/kg/day and the LOAEL at 27.0 mg/kg/day for parental/systemic toxicity based on body weight (bwt), organ weight, and clinical signs. There were no adverse effects in reproductive performance. The NOAEL for reproductive toxicity was considered to be >45.0 mg/kg/day (the highest dose tested (HDT)).

ii. A developmental study with zeta-cypermethrin in rats demonstrated a maternal NOAEL at 12.5 mg/kg/day and a LOAEL at 25 mg/kg/day based on decreased maternal body weight gain, food consumption and clinical signs. There were no signs of developmental toxicity at 35.0 mg/kg/day, the HDT.

iii. A developmental study with cypermethrin in rabbits demonstrated a maternal NOAEL at 100 mg/kg/day and a LOAEL at 450 mg/kg/day based on decreased body weight gain. There were no signs of developmental toxicity at 700 mg/kg/day, the HDT.

4. *Subchronic toxicity*. Short-term and intermediate-term toxicity (incidental oral exposure). The NOAEL at 10.0 mg/kg/day based on clinical signs at the lowest effect level (LEL) at 50.0 mg/kg/day in the zeta-cypermethrin acute neurotoxicity study in rats would also be used for short-term percent of the acute population adjusted dose (aPAD) and margin of exposure (MOE) calculations (as well as acute, discussed in paragraph (1) above), and the NOAEL at 5.0 mg/kg/day based on decreased motor activity in the zeta-cypermethrin subchronic neurotoxicity study in rats, would be used for intermediate-term MOE calculations.

5. *Chronic toxicity*—i. The chronic reference dose (RfD) at 0.06 mg/kg/day for zeta-cypermethrin is based on a NOAEL at 6.0 mg/kg/day from a cypermethrin chronic feeding study in dogs and an uncertainty factor (UF) of 100. The endpoint effect of concern was based on clinical signs.

ii. Cypermethrin is classified as a Group C chemical (possible human carcinogen with limited evidence of carcinogenicity in animals) based upon limited evidence for carcinogenicity in female mice; assignment of a Q^* has not been recommended.

6. *Animal metabolism*. The metabolism of cypermethrin in animals is adequately understood. Cypermethrin has been shown to be rapidly absorbed, distributed, and excreted in rats when administered orally. Cypermethrin is metabolized by hydrolysis and oxidation.

7. *Metabolite toxicology*. The Agency has previously determined that the metabolites of cypermethrin are not of toxicological concern and need not be included in the tolerance expression nor in the risk exposure assessments.

8. *Endocrine disruption*. No special studies investigating potential estrogenic or other endocrine effects of cypermethrin have been conducted. However, no evidence of such effects were reported in the standard battery of required toxicology studies which have been completed and found acceptable. Based on these studies, there is no evidence to suggest that cypermethrin has an adverse effect on the endocrine system.

C. Aggregate Exposure

1. *Dietary exposure*—i. *Food*. Permanent tolerances, in support of registrations, currently exist for residues of zeta-cypermethrin on: alfalfa hay, alfalfa forage, alfalfa seed, aspirated grain fractions, sugar beets (roots and tops), head, stem, and leafy Brassica vegetables, cabbage, field corn grain, pop corn grain, field corn forage, field corn stover, pop corn stover, sweet corn (K+CWHR), sweet corn forage, sweet corn stover, cottonseed, dried shelled peas, and beans, edible podded legume vegetables, fruiting vegetables (except Cucurbits), leafy vegetables, head lettuce, bulb, and green onions, pecans, rice grain, rice hulls, rice straw, sorghum forage, sorghum grain, sorghum stover, soybean seed, succulent shelled peas and beans, sugarcane, wheat forage, wheat grain, wheat hay, wheat straw, meat, fat, and meat byproducts of cattle, goats, hogs, horses, and poultry, eggs, milk, and milk fat. For the purposes of assessing the potential dietary exposure for these existing and the subject proposed tolerances, FMC Corporation has utilized available information on anticipated residues, monitoring data, and percent crop treated as follows:

ii. *Acute exposure and risk*. Acute dietary exposure risk assessments are performed for a food-use pesticide if a toxicological study has indicated the possibility of an effect of concern occurring as a result of a 1 day or single exposure. For the purposes of assessing acute dietary risk for zeta-cypermethrin, FMC Corporation has used the NOAEL of 10.0 mg/kg/day from the zeta-cypermethrin acute neurotoxicity study in rats with an UF of 100 (acute RfD = 0.10 mg/kg/day). The LEL of 50.0 mg/kg/day was based on clinical signs. This acute dietary endpoint is used to determine acute dietary risks to all population subgroups. Available information on anticipated residues, monitoring data, and percent crop treated was incorporated into a Tier 3 analysis, using Monte Carlo modeling for commodities that may be consumed in a single serving. These assessments show that the percent of acute PAD all fall below EPA's level of concern (LOC) (≥100%). The 95th percentile of exposure for the overall U.S. population was estimated to be 0.001012 mg/kg/day (percent of the acute RfD at 1.01); 99th percentile 0.002913 mg/kg/day (percent of the acute RfD at 2.91); and 99.9th percentile 0.012145 mg/kg/day (percent of the acute RfD at 12.14). The 95th percentile of exposure for all infants <1 year old was estimated to be 0.000716 mg/kg/day (percent of the acute RfD at 0.72); 99th percentile 0.005735 mg/kg/day (percent of the acute RfD at 5.74); and 99.9th percentile 0.027673 mg/kg/day (percent of the acute RfD of 27.67). The 95th percentile of exposure for nursing infants 1 year old was estimated to be 0.000420 mg/kg/day (percent of the acute RfD at 0.42); 99th percentile 0.001087 mg/kg/day (percent of the acute RfD at 1.09); and 99.9th percentile 0.004944 mg/kg/day (percent of the acute RfD at 4.94). The 95th percentile of exposure for non-nursing infants <1 year old (the most highly exposed population subgroup) was estimated to be 0.000826 mg/kg/day (percent of the acute RfD at 0.83); 99th percentile 0.011124 mg/kg/day (percent of the acute RfD at 11.12); and 99.9th percentile 0.031431 mg/kg/day (percent of the acute RfD of 31.43). The 95th percentile of exposure for

children 1 to 6 years old and children 7 to 12 years old was estimated to be, respectively, 0.001228 mg/kg/day (percent of the acute RfD at 1.23) and 0.001001 mg/kg/day (percent of the acute RfD at 1.0); 99th, percentile 0.003716 mg/kg/day (percent of the acute RfD at 3.72) and 0.002724 (percent of the acute RfD at 2.72); and 99.9th percentile 0.015244 mg/kg/day (percent of the acute RfD at 15.24) and 0.008805 (percent of the acute RfD at 8.81). The 95th percentile of exposure for females (13+/nursing) was estimated to be 0.001051mg/kg/day (percent of the acute RfD at 1.05); 99th percentile 0.003029 mg/kg/day (percent of the acute RfD at 3.03); and 99.9th percentile 0.013146 mg/kg/day (percent of the acute RfD at 13.15). Therefore, FMC Corporation concludes that the acute dietary risk of zeta-cypermethrin, as estimated by the dietary risk assessment, does not appear to be of concern.

iii. *Chronic exposure risk.* The chronic RfD at 0.06 mg/kg/day for zeta-cypermethrin is based on a NOAEL of 6.0 mg/kg/day from a cypermethrin chronic feeding study in dogs and an UF of 100. The endpoint effect of concern was based on clinical signs. A chronic dietary exposure/risk assessment has been performed for zeta-cypermethrin using the above chronic RfD. Available information on anticipated residues, monitoring data and percent crop treated was incorporated into the analysis to estimate the anticipated residue contribution (ARC). The ARC is generally considered a more realistic estimate than an estimate based on tolerance level residues. The ARC are estimated to be 0.000184 mg/kg bwt/day and utilize 0.3% of the chronic RfD for the overall U.S. population. The ARC for nursing infants (<1 year) and non-nursing infants (<1 year) (subgroup most highly exposed) are estimated to be 0.000052 mg/kg bwt/day and 0.000380 mg/kg bwt/day and utilizes 0.1% and 0.6% of the chronic RfD, respectively. The ARC for children 1 to 6 years old and children 7 to 12 years old are estimated to be 0.000337 mg/kg bwt/day and 0.000203 mg/kg bwt/day and utilizes 0.6% and 0.3% of the chronic RfD, respectively. The ARC for females (13+/nursing) are estimated to be 0.000177 mg/kg bwt/day and utilizes 0.3% of the RfD. Generally speaking, EPA has no cause for concern if the total dietary exposure from residues for uses for which there are published and proposed tolerances is less than 100% of the chronic RfD. Therefore, FMC Corporation concludes that the chronic dietary risk of zeta-cypermethrin, as estimated by the dietary risk assessment, does not appear to be of concern.

iv. *Drinking water.* Laboratory and field data have demonstrated that cypermethrin is immobile in soil and will not leach into ground water. Other data show that cypermethrin is virtually insoluble in water and extremely lipophilic. As a result, FMC Corporation concludes that residues reaching surface waters from field runoff will quickly adsorb to sediment particles and be partitioned from the water column. Drinking water estimated concentrations (DWEC) and the corresponding drinking water level of comparison (DWLOC) values were calculated for chronic and acute exposures. The results show that all DWLOC values exceed the DWEC values. Thus, exposure to zeta-cypermethrin and cypermethrin residues in drinking water is not of concern. EPA's draft SOP for Incorporating Estimates of Drinking Water Exposure into Aggregate Risk Assessments was used to perform a drinking water analysis. This SOP utilizes a variety of tools to conduct drinking water assessment. These tools include water models such as the Food Quailty Protection Act/Index Reservoir Screening Tool (FQPA)(FIRST), EPA's Pesticide Root Zone Model/Exposure Analysis Modeling System (PRZM/EXAMS), Screening Concentration in Ground Water (SCIGROW), and monitoring data. If monitoring data is not available, then the models are used to predict potential residues in drinking water. The technique recommended in the drinking water SOP compares a calculated DWLOC value to the drinking water estimated concentration (DWEC) value. The DWEC value results from either the monitoring data residues or modeled water residues. If the DWLOC value exceeds the DWEC value, then there is reasonable certainty that no harm will result from the acute or chronic aggregate exposure.

In the case of cypermethrin and zeta-cypermethrin, monitoring data do not exist. Therefore, the FIRST model was used to estimate a surface water residue. The risk assessment for drinking water compares two values:

a. The DWLOC and the DWEC. The DWLOC is the drinking water level of comparsion. This is the maximum allowable drinking water concentration (in parts per billion). The DWEC is the drinking water environmental concentration, which is derived either from monitoring studies or from modeling.

b. If the DWLOC is greater than the DWEC, then the overall exposure from water, food, and residential is considered to be acceptable. The calculated DWLOC values for acute and chronic exposures for all adults, adult females, and children exceed the modeled DWEC surface water residues. Therefore, there is reasonable certainty that no harm will result from cumulative and aggregate (food and water) exposure to cypermethrin and zeta-cypermethrin residues.

2. *Non-dietary exposure.* Zeta-cypermethrin is registered for agricultural crop applications only, therefore non-dietary exposure assessments are not warranted.

D. Cumulative Effects

In consideration of potential cumulative effects of cypermethrin and other substances that may have a common mechanism of toxicity, to our knowledge there are currently no available data or other reliable information indicating that any toxic effects produced by cypermethrin would be cumulative with those of other chemical compounds; thus only the potential risks of cypermethrin have been considered in this assessment of its aggregate exposure. FMC Corporation intends to submit information for EPA to consider concerning potential cumulative effects of cypermethrin consistent with the schedule established by EPA at (62 FR 42020, August 4, 1997) (FRL–5734–6), and other EPA publications pursuant to the FQPA.

E. Safety Determination

1. *U.S. population.* The chronic RfD at 0.06 mg/kg/day for zeta-cypermethrin is based on a NOAEL at 6.0 mg/kg/day from a cypermethrin chronic feeding study in dogs and an UF of 100. The endpoint effect of concern was based on clinical signs. A chronic dietary exposure/risk assessment has been performed for zeta-cypermethrin using the above chronic RfD. Available information on anticipated residues, monitoring data and percent crop treated was incorporated into the analysis to estimate the anticipated residue contribution ARC. The ARC is generally considered a more realistic estimate than an estimate based on tolerance level residues. The ARC is estimated to be 0.000184 mg/kg bwt/day and utilize 0.3% of the chronic RfD for the overall U.S. population. The ARC for nursing infants (<1 year) and non-nursing infants (<1 year) (subgroup most highly exposed) are estimated to be 0.000052 mg/kg bwt/day and 0.000380 mg/kg bwt/day and utilizes 0.1% and 0.6% of the chronic RfD, respectively. The ARC for children 1 to 6 years old and children 7 to 12 years old are estimated to be 0.000337 mg/kg bwt/day

and 0.000203 mg/kg bwt/day and utilizes 0.6% and 0.3% of the chronic RfD, respectively. The ARC for females (13+/nursing) are estimated to be 0.000177 mg/kg bwt/day and utilizes 0.3% of the RfD. Generally speaking, EPA has no cause for concern if the total dietary exposure from residues for uses for which there are published and proposed tolerances is less than 100% of the chronic RfD. Therefore, FMC Corporation concludes that the chronic dietary risk of zeta-cypermethrin, as estimated by the dietary risk assessment, does not appear to be of concern.

Acute dietary exposure risk assessments are performed for a food-use pesticide if a toxicological study has indicated the possibility of an effect of concern occurring as a result of a 1 day or single exposure. For the purposes of assessing acute dietary risk for zeta-cypermethrin, FMC Corporation has used the NOAEL of 10.0 mg/kg/day from the zeta-cypermethrin acute neurotoxicity study in rats with an UF of 100 (acute RfD = 0.10 mg/kg/day). The LEL of 50.0 mg/kg/day was based on clinical signs. This acute dietary endpoint is used to determine acute dietary risks to all population subgroups. Available information on anticipated residues, monitoring data and percent crop treated was incorporated into a Tier 3 analysis, using Monte Carlo modeling for commodities that may be consumed in a single serving. These assessments show that the percent of acute PAD all fall below EPA's LOC (≥100%). The 95th percentile of exposure for the overall U.S. popuation was estimated to be 0.001012 mg/kg/day (percent of the acute RfD at 1.01); 99th percentile 0.002913 mg/kg/day (percent of the acute RfD at 2.91); and 99.9th percentile 0.012145 mg/kg/day (percent of the acute RfD at 12.14). The 95th percentile of exposure for all infants <1 year old was estimated to be 0.000716 mg/kg/day (percent of the acute RfD at 0.72); 99th percentile 0.005735 mg/kg/day (percent of the acute RfD at 5.74); and 99.9th percentile 0.027673 mg/kg/day (percent of the acute RfD at 27.67). The 95th percentile of exposure for nursing infants <1 year old was estimated to be 0.000420 mg/kg/day (percent of the acute RfD at 0.42); 99th percentile 0.001087 mg/kg/day (percent of the acute RfD at 1.09); and 99.9th percentile 0.004944 mg/kg/day (percent of the acute RfD at 4.94). The 95th percentile of exposure for non-nursing infants <1 year old (the most highly exposed population subgroup) was estimated to be 0.000826 mg/kg/day (percent of the acute RfD at 0.83); 99th percentile 0.011124 mg/kg/day (percent of the acute RfD at 11.12); and 99.9 th percentile 0.031431 mg/kg/day (percent of the acute RfD at 31.43). The 95th percentile of exposure for children 1 to 6 years old and children 7 to 12 years old was estimated to be, respectively, 0.001228 mg/kg/day (percent of the acute RfD at 1.23); and 0.001001 mg/kg/day (percent of the acute RfD at 1.0); 99th percentile 0.003716 mg/kg/day (percent of the acute RfD at 3.72); and 0.002724 (percent of the acute RfD at 2.72); and 99.9th percentile 0.015244 mg/kg/day (percent of the acute RfD of 15.24); and 0.008805 (percent of the acute RfD at 8.81). The 95th percentile of exposure for females (13+/nursing) was estimated to be 0.001051 mg/kg/day (percent of the acute RfD at 1.05); 99th percentile 0.003029 mg/kg/day (percent of the acute RfD at 3.03); and 99.9th percentile 0.013146 mg/kg/day (percent acute RfD at 13.15). Therefore, FMC Corporation concludes that the acute dietary risk of zeta-cypermethrin, as estimated by the dietary risk assessment, does not appear to be of concern.

2. *Infants and children*—i. *General*. In assessing the potential for additional sensitivity of infants and children to residues of zeta-cypermethrin, FMC Corporation considered data from developmental toxicity studies in the rat, rabbit, and a 2–generation reproductive study in the rat. The data demonstrated no indication of increased sensitivity of rats to zeta-cypermethrin or rabbits to cypermethrin *in utero* and/or postnatal exposure to zeta-cypermethrin or cypermethrin. The developmental toxicity studies are designed to evaluate adverse effects on the developing organism resulting from pesticide exposure during prenatal development to one or both parents. Reproduction studies provide information relating to effects from exposure to the pesticide on the reproductive capability of mating animals and data on systemic toxicity. FFDCA section 408 provides that EPA may apply an additional margin of safety (MOS) for infants and children in the case of threshold effects to account for prenatal and postnatal toxicity and the completeness of the data base.

ii. *Developmental toxicity studies*. In the prenatal developmental toxicity studies in rats and rabbits, there was no evidence of developmental toxicity at the HDT (35.0 mg/kg/day in rats and 700 mg/kg/day in rabbits). Decreased body weight gain was observed at the maternal LOAEL in each study; the maternal NOAEL was established at 12.5 mg/kg/day in rats and 100 mg/kg/day in rabbits.

iii. *Reproductive toxicity study*. In the 2–generation reproduction study in rats, offspring toxicity (body weight), parental toxicity (body weight, organ weight, and clinical signs), were observed at 27.0 mg/kg/day and greater. The parental systemic NOAEL was 7.0 mg/kg/day and the parental systemic LOAEL was 27.0 mg/kg/day. There were no developmental (pup) or reproductive effects up to 45.0 mg/kg/day, HDT.

iv. *Prenatal and postnatal sensitivity*—a. *Prenatal*. There was no evidence of developmental toxicity in the studies at the HDT in the rat (70.0 mg/kg/day) or in the rabbit (700 mg/kg/day). Therefore, there is no evidence of a special dietary risk (either acute or chronic) for infants and children which would require an additional safety factor.

b. *Postnatal*. Based on the absence of pup toxicity up to dose levels which produced toxicity in the parental animals, there is no evidence of special postnatal sensitivity to infants and children in the rat reproduction study.

v. *Conclusion*. Based on the above, FMC Corporation concludes that reliable data support use of the standard 100-fold UF, and that an additional UF is not needed to protect the safety of infants and children. As stated above, aggregate exposure assessments utilized significantly less than 1% of the RfD for either the entire U.S. population or any of the 26 population subgroups including infants and children. Therefore, it may be concluded that there is reasonable certainty that no harm will result to infants and children from aggregate exposure to cypermethrin residues.

F. International Tolerances

There are no Canadian, or Mexican residue limits for residues of cypermethrin or zeta-cypermethrin in or on cucurbit vegetables, peanuts, root, and tuber vegetables. The Codex maximum residue levels for cypermethrin are cucumbers 0.2 ppm; peanuts 0.05 ppm; and for root and tuber vegetables 0.05 ppm.

[FR Doc. 02–19443 Filed 8–1–02; 8:45 am]

BILLING CODE 6560–50–S

EXPORT-IMPORT BANK OF THE UNITED STATES

Draft Guidelines for Ensuring and Maximizing the Quality, Objectivity, Utility and Integrity of Information Disseminated to the Public by the Export-Import Bank of the U.S. (Ex-Im Bank)

AGENCY: Export-Import Bank of the United States (Ex-Im Bank).

ACTION: Notice of draft guidelines.

SUMMARY: The Export-Import Bank (Ex-Im Bank) is seeking comments on the draft Information Quality Guidelines that follow.

ADDRESSES: Export-Import Bank of the United States, 811 Vermont Avenue, NW., Washington, DC 20571.

FOR FURTHER INFORMATION CONTACT: Kalesha Malloy, Office of the Chief Information Officer Information Management & Technology Group, 811 Vermont Avenue, NW., Room 763, Washington DC 20571; by e-mail at *kalesha.malloy@exim.gov,* by phone at (202) 565–3857; or by fax at (202) 565–3424.

DATES: Comments should be received on or before August 16, 2002.

SUPPLEMENTARY INFORMATION:

Dated: July 29, 2002.

Carlista D. Robinson,

Agency Clearance Officer.

Introduction and Purpose

The Export-Import Bank (Ex-Im Bank) is seeking comments on the draft Information Quality Guidelines that follow. These draft Information Quality Guidelines describe Ex-Im Bank's pre-dissemination information publicly disseminated by Ex-Im Bank. Ex-Im Bank will post its draft Information Quality Guidelines on its Web site at *htlp://www.exim.gov/omb/dataquality.doc* and encourages public comment on the report. Please submit comments to Kalesha Malloy, Office of the Chief Information Officer, Information Management & Technology Group, 811 Vermont Ave, NW., Room 763, Washington, DC 20571, by phone at (202) 565–3857, by e-mail at *kalesha.malloy@exim.gov* or by fax at (202) 565–3424. Comments should be received on or before August 16, 2002.

These guidelines are drafted in accordance with ''Guidelines for Ensuring and Maximizing the Quality, Objectivity, Utility, and Integrity of Information Disseminated by Federal Agencies'' (''Agency-wide guidelines'') published by the Office of Management and Budget (''OMB) in 66 FR 49718 on Friday, September 28, 2001, updated in 67 FR 369 on Thursday, January 3, 2002 and corrected in 67 FR 8452 on February 22, 2002. These published guidelines were issued pursuant to Section 515 of the Treasury and General Government Appropriations Act for FY2001 (Public Law 106–554). In accordance with these provisions, each Federal Agency is obligated to:

1. Issue their own information quality guidelines ensuring and maximizing the quality, objectivity, utility, and integrity of information, including statistical information, disseminated by the agency no later than October 1, 2002;

2. Establish administrative mechanisms allowing affected persons to seek and obtain correction of information maintained and disseminated by the agency that does not comply with these OMB guidelines; and

3. Report annually to the Director of OMB, beginning January 1, 2004, the number and nature of complaints received by the agency regarding agency compliance with these OMB guidelines concerning the quality, objectivity, utility, and integrity of information and how such complaints were resolved.

Consistent with the Agency-wide Guidelines, Ex-Im Bank's draft guidelines rely on its existing practices, to the extent they are consistent with the recently published guidelines, while adopting a new administrative mechanism to satisfy the new procedural requirements. Ex-Im Bank's guidelines reflect its internal procedures for reviewing and substantiating information to maximize quality, including the objectivity, utility, and integrity of information, before it is disseminated. The administrative mechanism allows affected persons to seek and obtain, where appropriate correction of information disseminated by Ex-Im Bank that does not comply with these guidelines or with the Agency-wide Guidelines.

Ex-Im Banks draft guidelines follow:

Background

Ex-Im Bank publishes these guidelines in accordance with the Guidelines for Ensuring and Maximizing the Quality, Objectivity, Utility, and Integrity of Information Disseminated by Federal Agencies (Agency-wide guidelines) published by the Office of Management and Budget in 66 FR 49718 on Friday, September 28, 2001, updated in 67 FR 369 on Thursday, January 3, 2002 and corrected in 67 FR 8452 on February 22, 2002. These published guidelines were issued pursuant to Section 515 of the Paperwork Reduction Act (44 U.S.C. 3502(1) et seq.) In response to the legislation and the published guidelines, Ex-Im Bank identifies the following policies and procedures for ensuring and maximizing the quality, objectivity, utility, and integrity of information disseminated by Ex-Im Bank; and it hereby establishes additional procedures for affected persons to seek and obtain correction of information maintained and disseminated by Ex-Im Bank that does not comply with standards set out in the Agency-wide Guidelines.

Ex-Im Bank is an independent U.S. Government agency that helps finance the overseas sales of U.S. goods and services. In 65 years, Ex-Im Bank has supported more than $300 billion in U.S. exports. Ex-Im Bank's mission is to create jobs through exports. It provides guarantees of working capital loans for U.S. exporters, guarantees the repayment of commercial export loans, or makes loans to foreign purchasers of U.S. goods and services. Ex-Im Bank also provides credit insurance that protects U.S. exporters against the risks of non-payment by foreign buyers for political or commercial reasons. Ex-Im Bank does not compete with commercial lenders, but assumes the risks they cannot accept. Ex-Im Bank must always conclude that there is reasonable assurance of repayment on every transaction financed. Ex-Im Bank takes pride in the quality, objectivity, utility, and integrity of hte information that it disseminates to the public.

1. Procedures for Ensuring and Maximizing the Quality, Objectivity, Utility, and Integrity of Information Prior to Dissemination

In Agency-wide Guidelines, ''quality'' is defined as a term comprising utility, objecteivity, and integrity.

(a) Objectivity of Information

(i) As defined in Section IV, below, ''objecteivity'' is a measure of whether disseminated information ''accurate, clear, complete, and unbaised;'' ''utility'' refers to the usefulness of the information to its intended audience. Ex-Im Bank is committed to disseminating reliable and useful information. Before disseminating information, appropriate Ex-Im Bank staff and officials will review the information.

(ii) It is the primary responsibility of the Office drafting information intended for dissemination to pursue the most knowledgeable and reliable sources reasonably available to confirm the objectivity of such information and to ensure appropriate technical and policy clearance before public dissemination. Clearance procedures will vary with the

nature of the information and the manner of its dissemination.

(iii) Ex-Im seeks to achieve objectivity by using reliable sources, sound analytical and editorial techniques, and by having qualified staff prepare information products that are carefully reviewed.

(1) Use of reliable data sources

Information products disseminated by Ex-Im Bank will be based on reliable, accurate data that have been validated. Most of the information disseminated by Ex-Im Bank is based on program and administrative data files. Qualified Ex-Im Bank staff conduct ongoing reviews of the programs, producers, and services that it provides to its customers such as what they are, who is eligible, and how and where to apply for the programs to obtain the products and services. Information that is disseminated on a program, service or product is derived from data maintained by Ex-Im Bank staff responsible for that program, service or product. The review also considers the presentation of the information to ensure that it is put in the proper context and presented in a clear, complete and unbiased manner. FOIA requests are answered in accordance with FOIA requirements. Where appropriate, Ex-Im Bank identifies the source of supporting data so that the public can assess for itself the objectivity of those sources.

(2) Sound analytical techniques

Information on programs products, and services are derived from reliable sources. Ex-Im Bank's staff is knowledgeable about the data sources that are used, and sound, archival, analytical or statistical techniques are applied when appropriate. Data files incorporating external data sources are reviewed to ensure that extraction and linkage processes have been implemented correctly. Documentation in Ex-Im Bank's publication contains information on data sources including definitions and specifications of variables. Technically qualified staff reviews all analytical reports and policy studies to ensure that analysis is valid, complete, unbiased, objective, and relevant.

(3) Editorial review for accuracy and clarity of information in publications

All information on programs, products, and services are edited and proofread before release to ensure clarity and coherence of the final report. Text is edited to ensure that the product is easy to read and grammatically correct, thoughts flow logically, and information is worded concisely and clearly. Tables and charts are edited so that they clearly and accurately illustrate and support points made in the text and include concise but descriptive titles. Appropriate Ex-Im Bank staff reviews and approves all changes made.

(4) Policy for correcting errors

If an error is detected before information is disseminated, it is corrected or a correction notice is given. If information has already been disseminated, it is corrected and/or an amendment is provided. The Ex-Im Bank division that originally issued an information product on the web site tracks and records any correction to it. When appropriate, correction notices and the corrected information itself are posted on our web site.

(b) Utility of Information

Utility involves the usefulness of the information to its intended users, including the public. Ex-Im Bank is committed to maximizing the utility of the information it disseminates to the public.

(i) Ex-Im Bank achieves utility by staying informed of information needs and developing new information sources by revising existing methods. Ex-Im Bank keeps abreast of information needs by convening and attending conferences and seminars, conducting user surveys, working with advisory committees, and responding to inquiries from exporters, potential foreign borrowers, bankers, academia, Congress, other US government agencies, and the press. Contact information is available, where appropriate on a variety of information products to allow for questions, comments, and suggestions from users.

(ii) The User's Guide, the web site, and other information products are reviewed to ensure that they remain relevant and address current information needs. Information products are revised frequently, new products are introduced, and some products are discontinued based on internal product reviews and consultations with users. To the extent practicable information products are disseminated in the format or formats that make the information most useful and accessible to the users. These documents are available on the Ex-Im Bank website, and the electronic versions can be accessed and downloaded directly. All documents posted on the Ex-Im Bank web site are in compliance with section 508 and are therefore available to an audience that includes persons who have a visual impairment and who read online using assistive technology.

(c) Integrity of Information

Integrity refers to security of information—protection of the information from unauthorized access or revision, to ensure that the information is not compromised.

(i) To ensure the integrity of its administrative information, Ex-Im Bank has in place rigorous controls that have been identified as representing sound security practices, and which are reviewed by Em-Im Bank's outside auditor. Ex-Im Bank administers financial and product programs that touch the operations of exporters, banks, and other government agencies. Ex-Im Bank has in place programs and policies for securing its resources as required by Governmental Information Security Reform Act (P.L. 106–398, title X, subtitle G). These security procedures address all major components of information security and apply to all Ex-Im Bank operating components.

(ii) Ex-Im Bank is subject to statutory requirements to protect the sensitive information it gathers and maintains on companies, banks, products, and services. These requirements are contained in the following documents:

- Privacy Act of 1974
- Computer Security Act of 1987
- Office of Management and Budget (OMB) Circulars A–123, A–127, and A–130
- Government Information Security Reform Act; and
- Federal Managers' Financial Integrity Act (FMFIA) of 1982

2. Requests for Correction of Information Publicly Disseminated by Ex-Im Bank

(a) Affected members of the public who believe that information disseminated by Ex-Im Bank does not comply with OMB guidelines or these agency guidelines may contact Kalesha Malloy, Office of the Chief Information Officer, Information Management & Technology Group, 811 Vermont Ave, NW., Room 763, Washington, DC 20571, by phone at (202) 565–3857, by email at *kalesha.malloy@exim.gov* or by fax at (202) 565–3424, to request a correction of the information. The correction request will be referred to the program unit responsible for development or maintenance for the information. The initial request should include name of requester and requester's organization, mailing address, telephone number, email address, and a brief statement of the alleged conflict with OMB or Ex–Im Bank guidelines.

(b) Ex-Im Bank will respond to requests by letter, or email. The letter or email will inform the requester whether Ex-Im Bank believes a correction is appropriate given the nature and timeliness of the information involved, and if so, will provide correction of information.

(c) A response to a request will be made within 30 calendar days after its receipt (or sooner, if it is possible to quickly resolve the request and if immediate attention is necessary due to the nature of the information).

(d) If Ex-Im Bank denies a request for correction the requester can request reconsideration at the above contact information. Requests for reconsideration shall be made within 30 days of the date of notification of action on the original request, shall include that the communication is a request for reconsideration and should include a copy of the original request.

(e) Requests for reconsideration shall be considered by Ex-Im Bank's Chief Information Officer. Ex-Im Bank will respond to the request for reconsideration in written form within 60 days.

3. Definitions

(a) ''Affected'' persons are those who may benefit or be harmed by the disseminated information. This includes both: (a) persons seeking to address information about themselves or about other persons to which they are related or associated; and (b) persons who use the information.

(b) ''Dissemination'' means agency initiated or sponsored distribution of information to the public (see 5 CFR 1320.3(d) ''Conduct or Sponsor''). Dissemination does not include distributions of information or other materials that are:

(i) intended for government employees or agency contractors or grantees;

(ii) intended for U.S. Government agencies;

(iii) produced in response to requests for agency records under the Freedom of Information Act, the Privacy Act, the Federal Advisory Committee Act or similar law;

(iv) correspondence or other communication limited to individuals or to other persons, within the meaning of paragraph 7, below; or

(v) communications such as press releases, interviews, speeches, and similar statements.

(vi) Also excluded from the definition are archival records; public filings; responses to subpoenas or compulsory document productions; or documents prepared and released in the context of adjudicative processes. These guidelines do not impose any additional requirements on agencies during adjudicative proceedings any additional rights of challenge or appeal.

(c) ''Influential'' means disseminated information that Ex-Im Bank determines will have a clear and substantial impact on important public policies or important private sector decisions.

(d) ''Information,'' for purposes of these guidelines means any communication or representation of facts or data, in any medium or form, including textual, numerical, graphic, cartographic, narrative, or audiovisual forms. This definition does not include:

(i) opinions, where the presentation makes clear that the statements are subjective opinions, rather than facts. Underlying information upon which the opinion is based may be subject to these guidelines only if that information is published by Ex-Im Bank;

(ii) information originated by, and attributed to, non-Ex-Im Bank sources, Examples include: non-U.S. Government information reported and duly attributed in materials prepared and disseminated by Ex-Im Bank; hyperlinks on Ex-Im Bank's website to information that others disseminate; and information from third parties published on Ex-Im Bank's website;

(iii) statements related solely to the internal personnel rules and practices of Ex-Im Bank;

(iv) and other materials produced for Ex-Im Bank employees or contractors;

(v) descriptions of the agency, its responsibilities and its organizational components;

(vi) statements, the modification of which might cause harm to the national security, including harm to the national defense or foreign relations of the United States;

(vii) testimony or comments of Ex-Im Bank officials before courts, administrative bodies, Congress, or the media;

(viii) investigatory material compiled pursuant to U.S. law or for law enforcement purposes in the United States; or statements which are, or which reasonably may be expected to become, the subject of litigation, whether before a U.S. foreign court or in an international arbitral or other dispute resolution proceeding.

(e) ''Integrity'' refers to the security of information—protection of the information from unauthorized access or revision, to prevent the information from being compromised through corruption or falsification.

(f) ''Objectivity'' addresses whether disseminated information is being presented in an accurate, clear, complete, and unbiased manner, including background information where warranted by the circumstances.

(g) ''Person'' means an individual, partnership, association, corporation, business trust, or legal representative, an organized group of individuals, a regional, national, State, territorial, tribal, or local government or branch thereof, or a political subdivision of a State, territory, tribal, or local government or a branch of a political subdivision, or an international organization.

(h) ''Quality'' is an encompassing term comprising utility, objectivity, and integrity. Therefore, the guidelines sometimes refer these four statutory terms, collectively, as ''quality''.

(i) ''Utility'' refers to the usefulness of the information to its intended users, including the public.

[FR Doc. 02–19498 Filed 8–1–02; 8:45 am]

BILLING CODE 6690–01–M

FEDERAL COMMUNICATIONS COMMISSION

[DA 02–1807]

Rescheduling of Eleventh Meeting of the Advisory Committee for the 2003 World Radiocommunication Conference (WRC–03 Advisory Committee)

AGENCY: Federal Communications Commission.

ACTION: Notice.

SUMMARY: In accordance with the Federal Advisory Committee Act, this notice advises interested persons that the next meeting of the WRC–03 Advisory Committee originally scheduled for August 22, 2002 (FR/Vol. 67, No. 139/Friday, July 19, 2002/Notices) has been rescheduled and will now be held on September 5, 2002, at the Federal Communications Commission. The purpose of the meeting is to continue preparations for the 2003 World Radiocommunication Conference. The Advisory Committee will consider any preliminary views and/or proposals introduced by the Advisory Committee's Informal Working Groups.

DATES: September 5, 2002; 2:00 pm–4:00 pm.

ADDRESSES: Federal Communications Commission, 445 12th Street, SW., Commission Meeting Room (TW–C305), Washington DC 20554.

FOR FURTHER INFORMATION CONTACT: Alexander Roytblat, FCC International Bureau, Strategic Analysis and Negotiations Division, at (202) 418–7501.

SUPPLEMENTARY INFORMATION: The Federal Communications Commission (FCC) established the WRC–03 Advisory Committee to provide advice, technical support and recommendations relating to the preparation of United States

proposals and positions for the 2003 World Radiocommunication Conference (WRC–03). In accordance with the Federal Advisory Committee Act, Public Law 92–463, as amended, this notice advises interested persons of the eleventh meeting of the WRC–03 Advisory Committee. The WRC–03 Advisory Committee has an open membership. All interested parties are invited to participate in the Advisory Committee and to attend its meetings. The proposed agenda for the eleventh meeting is as follows:

Agenda

Eleventh Meeting of the WRC–03 Advisory Committee, Federal Communications Commission, 445 12th Street, SW., Commission Meeting Room (TW–C305), Washington, DC 20554, September 5, 2002; 2 p.m.–4 p.m.

1. Opening Remarks
2. Approval of Agenda
3. Approval of the Minutes of the Tenth Meeting
4. Reports from regional WRC–03 Preparatory Meetings
5. NTIA Draft Preliminary Views and Proposals
6. IWG Reports and Documents relating to:
   a. Consensus Views and Issue Papers
   b. Draft Proposals
7. Future Meetings
8. Other Business

Federal Communications Commission.

Anna Gomez,

Deputy Bureau Chief.

[FR Doc. 02–19491 Filed 8–1–02; 8:45 am]

BILLING CODE 6712–01–P

FEDERAL COMMUNICATIONS COMMISSION

[Report No. 2566]

Petition for Reconsideration of Action in Rulemaking Proceedings

July 25, 2002.

Petition for Reconsideration has been filed in the Commission's rulemaking proceedings listed in this Public Notice and published pursuant to 47 CFR 1.429(e). The full text of this document is available for viewing and copying in Room CY–A257, 445 12th Street, SW., Washington, DC or may be purchased from the Commission's copy contractor, Qualex International (202) 863–2893. Oppositions to this petition must be filed by August 19, 2002. *See* Section 1.4(b)(1) of the Commission's rules (47 CFR 1.4(b)(1)). Replies to an opposition must be filed within 10 days after the time for filing oppositions has expired.

Subject: Amendment of the FM Table of Allotments (MM Docket No. 01–131, MM Docket No. 01–133).

Number of Petitions Filed: 1.

Marlene H. Dortch,

Secretary.

[FR Doc. 02–19492 Filed 8–1–02; 8:45 am]

BILLING CODE 6712–01–M

FEDERAL DEPOSIT INSURANCE CORPORATION

Notice of Agency Meeting

Pursuant to the provisions of the ''Government in the Sunshine Act'' (5 U.S.C. 552b), notice is hereby given that the Federal Deposit Insurance Corporation's Board of Directors will meet in open session at 10 a.m. on Tuesday, August 6, 2002, to consider the following matters:

Summary Agenda

No substantive discussion of the following items is anticipated. These matters will be resolved with a single vote unless a member of the Board of Directors requests that an item be moved to the discussion agenda.

Summary reports, status reports, and reports of actions taken pursuant to authority delegated by the Board of Directors.

Discussion Agenda

Memorandum re: Proposed 2002 Budget Increase.

Memorandum and resolution re: Draft Regulation on Living Trust Accounts and Other Changes to the Deposit Insurance Regulations.

The meeting will be held in the Board Room on the sixth floor of the FDIC Building located at 550—17th Street, NW., Washington, DC.

The FDIC will provide attendees with auxiliary aids (*e.g.,* sign language interpretation) required for this meeting. Those attendees needing such assistance should call (202) 416–2089 (Voice); (202) 416–2007 (TTY), to make necessary arrangements.

Requests for further information concerning the meeting may be directed to Mr. Robert E. Feldman, Executive Secretary of the Corporation, at (202) 898–3742.

Federal Deposit Insurance Corporation.

Dated: July 30, 2002.

Robert E. Feldman,

Executive Secretary.

[FR Doc. 02–19618 Filed 7–31–02; 8:45 am]

BILLING CODE 6714–01–M

FEDERAL EMERGENCY MANAGEMENT AGENCY

[FEMA–1425–DR]

Texas; Amendment No. 8 to Notice of a Major Disaster Declaration

AGENCY: Federal Emergency Management Agency (FEMA).

ACTION: Notice.

SUMMARY: This notice amends the notice of a major disaster declaration for the State of Texas, (FEMA–1425–DR), dated July 4, 2002, and related determinations.

EFFECTIVE DATE: July 22, 2002.

FOR FURTHER INFORMATION CONTACT: Rich Robuck, Readiness, Response and Recovery and Directorate, Federal Emergency Management Agency, Washington, DC 20472, (202) 646–2705 or *Rich.Robuck@fema.gov*.

SUPPLEMENTARY INFORMATION: The notice of a major disaster declaration for the State of Texas is hereby amended to include the following areas among those areas determined to have been adversely affected by the catastrophe declared a major disaster by the President in his declaration of July 4, 2002:

DeWitt and Victoria Counties for Individual Assistance.

(The following Catalog of Federal Domestic Assistance Numbers (CFDA) are to be used for reporting and drawing funds: 83.537, Community Disaster Loans; 83.538, Cora Brown Fund Program; 83.539, Crisis Counseling; 83.540, Disaster Legal Services Program; 83.541, Disaster Unemployment Assistance (DUA); 83.542, Fire Suppression Assistance; 83.543, Individual and Family Grant (IFG) Program; 83.544, Public Assistance Grants; 83.545, Disaster Housing Program; 83.548, Hazard Mitigation Grant Program)

Joe M. Allbaugh,

Director.

[FR Doc. 02–19574 Filed 8–1–02; 8:45 am]

BILLING CODE 6718–02–P

FEDERAL EMERGENCY MANAGEMENT AGENCY

[FEMA–1429–DR]

Wisconsin; Major Disaster and Related Determinations

AGENCY: Federal Emergency Management Agency (FEMA).

ACTION: Notice.

SUMMARY: This is a notice of the Presidential declaration of a major disaster for the State of Wisconsin (FEMA–1429–DR), dated July 19, 2002, and related determinations.

EFFECTIVE DATE: July 19, 2002.

FOR FURTHER INFORMATION CONTACT: Rich Robuck, Readiness, Response and Recovery Directorate, Federal Emergency Management Agency, Washington, DC 20472, (202) 646–2705 or *Rich.Robuck@fema.gov.*

SUPPLEMENTARY INFORMATION: Notice is hereby given that, in a letter dated July 19, 2002, the President declared a major disaster under the authority of the Robert T. Stafford Disaster Relief and Emergency Assistance Act, 42 U.S.C. 5121–5206 (Stafford Act), as follows:

I have determined that the damage in certain areas of the State of Wisconsin, resulting from severe storms and flooding on June 21–25, 2002, is of sufficient severity and magnitude to warrant a major disaster declaration under the Robert T. Stafford Disaster Relief and Emergency Assistance Act, 42 U.S.C. 5121–5206 (Stafford Act). I, therefore, declare that such a major disaster exists in the State of Wisconsin.

In order to provide Federal assistance, you are hereby authorized to allocate from funds available for these purposes, such amounts as you find necessary for Federal disaster assistance and administrative expenses.

You are authorized to provide Public Assistance in the designated areas, and Hazard Mitigation throughout the State, and any other forms of assistance under the Stafford Act you may deem appropriate. Consistent with the requirement that Federal assistance be supplemental, any Federal funds provided under the Stafford Act for Public Assistance and Hazard Mitigation will be limited to 75 percent of the total eligible costs. If Individual Assistance is later requested and warranted, Federal funds provided under the Individual and Family Grant program will be limited to 75 percent of the total eligible costs.

Further, you are authorized to make changes to this declaration to the extent allowable under the Stafford Act.

Notice is hereby given that pursuant to the authority vested in the Director of the Federal Emergency Management Agency under Executive Order 12148, I hereby appoint James L. Roche of the Federal Emergency Management Agency to act as the Federal Coordinating Officer for this declared disaster.

I do hereby determine the following areas of the State of Wisconsin to have been affected adversely by this declared major disaster:

Adams, Clark, Dunn, Marathon, Marinette, Portage, Waushara, and Wood Counties for Public Assistance.

All counties within the State of Wisconsin are eligible to apply for assistance under the Hazard Mitigation Grant Program.

(The following Catalog of Federal Domestic Assistance Numbers (CFDA) are to be used for reporting and drawing funds: 83.537, Community Disaster Loans; 83.538, Cora Brown Fund Program; 83.539, Crisis Counseling; 83.540, Disaster Legal Services Program; 83.541, Disaster Unemployment Assistance (DUA); 83.542, Fire Suppression Assistance; 83.543, Individual and Family Grant (IFG) Program; 83.544, Public Assistance Grants; 83.545, Disaster Housing Program; 83.548, Hazard Mitigation Grant Program)

Joe M. Allbaugh,

Director.

[FR Doc. 02–19572 Filed 8–1–02; 8:45 am]

BILLING CODE 6718–02–P

FEDERAL EMERGENCY MANAGEMENT AGENCY

[FEMA–1429–DR]

Wisconsin; Amendment 1 to Notice of a Major Disaster Declaration

AGENCY: Federal Emergency Management Agency (FEMA).

ACTION: Notice.

SUMMARY: This notice amends the notice of a major disaster for the State of Wisconsin (FEMA–1429–DR), dated July 19, 2002, and related determinations.

EFFECTIVE DATE: July 22, 2002.

FOR FURTHER INFORMATION CONTACT: Rich Robuck, Readiness, Response and Recovery Directorate, Federal Emergency Management Agency, Washington, DC 20472, (202) 646–2705 or *Rich.Robuck@fema.gov*.

SUPPLEMENTARY INFORMATION: Notice is hereby given that, effective this date and pursuant to the authority vested in the Director of the Federal Emergency Management Agency under Executive Order 12148, I hereby appoint Marianne Jackson of the Federal Emergency Management Agency to act as the Federal Coordinating Officer for this declared disaster.

This action terminates my appointment of James L. Roche as Federal Coordinating Officer for this disaster.

(The following Catalog of Federal Domestic Assistance Numbers (CFDA) are to be used for reporting and drawing funds: 83.537, Community Disaster Loans; 83.538, Cora Brown Fund Program; 83.539, Crisis Counseling; 83.540, Disaster Legal Services Program; 83.541, Disaster Unemployment Assistance (DUA); 83.542, Fire Suppression Assistance; 83.543, Individual and Family Grant (IFG) Program; 83.544, Public Assistance Grants; 83.545, Disaster Housing Program; 83.548, Hazard Mitigation Grant Program)

Joe M. Allbaugh,

Director.

[FR Doc. 02–19573 Filed 8–1–02; 8:45 am]

BILLING CODE 6718–02–P

FEDERAL EMERGENCY MANAGEMENT AGENCY

Open Meeting of the Federal Interagency Committee on Emergency Medical Services (FICEMS)

AGENCY: Federal Emergency Management Agency (FEMA).

ACTION: Notice of open meeting.

SUMMARY: FEMA announces the following open meeting.

NAME: Federal Interagency Committee on Emergency Medical Services (FICEMS).

DATE OF MEETING: September 5, 2002.

PLACE: Building S, Room 114, National Emergency Training Center (NETC), 16825 South Seton Avenue, Emmitsburg, Maryland 21727.

TIME: 10:30 a.m.

PROPOSED AGENDA: Review and submission for approval of previous FICEMS Committee Meeting Minutes; Ambulance Design Subcommittee and Technology Subcommittee Reports; Counter-terrorism Subcommittee report; presentation of member agency reports; and reports of other interested parties.

SUPPLEMENTARY INFORMATION: This meeting will be open to the public with limited seating available on a first-come, first-served basis. See the Response and Security Procedures below.

Response Procedures: Committee Members and members of the general public who plan to attend the meeting should contact Ms. Patti Roman, on or before Tuesday, September 3, 2002, via mail at NATEK Incorporated, 4200–G Technology Court, Chantilly, Virginia 20151, or by telephone at (703) 818–7070, or via facsimile at (703) 818–0165, or via e-mail at *proman@natekinc.com.* This is necessary to be able to create and provide a current roster of visitors to NETC Security per directives.

Security Procedures: Increased security controls and surveillance are in effect at the National Emergency Training Center. All visitors must have a valid picture identification card and their vehicles will be subject to search by Security personnel. All visitors will be issued a visitor pass which must be worn at all times while on campus. Please allow adequate time before the meeting to complete the security process.

Conference Call Capabilities: If you are not able to attend in person, a toll free number has been set up for teleconferencing. Members should call in around 10:30 a.m. The number is 1–800–320–4330. The FICEMS conference code is ''16.'' If you plan to call in, you should just enter the

number ''16''—no need to hit any other buttons, such as the star or pound keys.

FICEMS Meeting Minutes: Minutes of the meeting will be prepared and will be available upon request 30 days after they have been approved at the next FICEMS Committee Meeting on December 5, 2002. The minutes will also be posted on the United States Fire Administration Web site at *http://www.usfa.fema.gov/ems/ficems.htm* within 30 days after their approval at the December 5, 2002 FICEMS Committee Meeting.

R. David Paulison,

U.S. Fire Administrator.

[FR Doc. 02–19575 Filed 8–1–02; 8:45 am]

BILLING CODE 6718–08–P

FEDERAL RESERVE SYSTEM

Change in Bank Control Notices; Acquisition of Shares of Bank or Bank Holding Companies

The notificants listed below have applied under the Change in Bank Control Act (12 U.S.C. 1817(j)) and § 225.41 of the Board's Regulation Y (12 CFR 225.41) to acquire a bank or bank holding company. The factors that are considered in acting on the notices are set forth in paragraph 7 of the Act (12 U.S.C. 1817(j)(7)).

The notices are available for immediate inspection at the Federal Reserve Bank indicated. The notices also will be available for inspection at the office of the Board of Governors. Interested persons may express their views in writing to the Reserve Bank indicated for that notice or to the offices of the Board of Governors. Comments must be received not later than August 16, 2002.

A. Federal Reserve Bank of San Francisco (Maria Villanueva, Consumer Regulation Group) 101 Market Street, San Francisco, California 94105–1579:

1. George R. Dill and Mary S. Dill, both of Fife, Washington, Elsie J. Dill and Henry Dill, both of Salinas, California, and Dorothy Foland, Wenatchee, Washington; to increase their ownership in Puget Sound Financial Services, Inc., and thereby indirectly acquire voting shares of Fife Commercial Bank, both of Fife, Washington.

Board of Governors of the Federal Reserve System, July 29, 2002.

Robert deV. Frierson,

Deputy Secretary of the Board.

[FR Doc. 02–19478 Filed 8–1–02; 8:45 am]

BILLING CODE 6210–01–S

FEDERAL RESERVE SYSTEM

Formations of, Acquisitions by, and Mergers of Bank Holding Companies

The companies listed in this notice have applied to the Board for approval, pursuant to the Bank Holding Company Act of 1956 (12 U.S.C. 1841 *et seq.*) (BHC Act), Regulation Y (12 CFR Part 225), and all other applicable statutes and regulations to become a bank holding company and/or to acquire the assets or the ownership of, control of, or the power to vote shares of a bank or bank holding company and all of the banks and nonbanking companies owned by the bank holding company, including the companies listed below.

The applications listed below, as well as other related filings required by the Board, are available for immediate inspection at the Federal Reserve Bank indicated. The application also will be available for inspection at the offices of the Board of Governors. Interested persons may express their views in writing on the standards enumerated in the BHC Act (12 U.S.C. 1842(c)). If the proposal also involves the acquisition of a nonbanking company, the review also includes whether the acquisition of the nonbanking company complies with the standards in section 4 of the BHC Act (12 U.S.C. 1843). Unless otherwise noted, nonbanking activities will be conducted throughout the United States. Additional information on all bank holding companies may be obtained from the National Information Center website at www.ffiec.gov/nic/.

Unless otherwise noted, comments regarding each of these applications must be received at the Reserve Bank indicated or the offices of the Board of Governors not later than August 29, 2002.

A. Federal Reserve Bank of Kansas City (Susan Zubradt, Assistant Vice President) 925 Grand Avenue, Kansas City, Missouri 64198–0001:

1. Lauritzen Corporation, Omaha, Nebraska; to acquire an additional 4.1 percent, for a total of 28 percent of the voting shares of First National of Nebraska, Inc., Omaha, Nebraska, and thereby indirectly acquire additional voting shares of Platte Valley State Bank and Trust Company, Kearney, Nebraska; First National Bank & Trust Company of Columbus, Columbus, Nebraska; First National Bank, North Platte, Nebraska; The Fremont National Bank and Trust Company, Fremont, Nebraska; First National Bank South Dakota, Yankton, South Dakota; Union Colony Bank, Greeley, Colorado; First National Bank of Omaha, Omaha, Nebraska; First National Bank, Fort Collins, Colorado; Castle Bank, National Association, De Kalb, Illinois; First National Bank of Colorado, Boulder, Colorado; First National Bank of Kansas, Overland Park, Kansas; First National of Colorado, Inc., Fort Collins, Colorado; and First National of Illinois, Inc., Omaha, Illinois.

Board of Governors of the Federal Reserve System, July 30, 2002.

Robert deV. Frierson,

Deputy Secretary of the Board.

[FR Doc. 02–19587 Filed 8–1–02; 8:45 am]

BILLING CODE 6210–01–S

GENERAL SERVICES ADMINISTRATION

Governmentwide Per Diem Advisory Board

AGENCY: Office of Governmentwide Policy, GSA.

ACTION: Notice of meeting.

SUMMARY: Notice is hereby given that the Governmentwide Per Diem Advisory Board will hold an open meeting from 8:30 a.m. to 4 p.m. on Tuesday, August 13, 2002. The meeting will be held at The Council on Foundations Conference Center, 1828 L Street, NW., Suite 505, Washington, DC 20036. This meeting is open to the public. Members of the public who wish to file a written statement with the Board may do so in writing c/o Rob Miller, Designated Federal Officer (MTT), General Services Administration, 1800 F St., NW., Room G–219, Washington, DC 20405, or via e-mail at *robl.miller@gsa.gov.* Due to critical mission and schedule requirements, there is insufficient time to provide the full 15 calendar days' notice in the **Federal Register** prior to this meeting, pursuant to the final rule on Federal Advisory Committee management codified at 41 CFR 102–3.150.

Purpose: To review the current process and methodology that is used by GSA's Office of Governmentwide Policy to determine the per diem rates for destinations within the continental United States (CONUS). The Board will receive a committee report for developing an organizational structure to improve the per diem process, and receive a committee plan for identifying best practices for a Governmentwide lodging program.

For security and building access: (1) Attendees should be prepared to present a government-issued photo identification; (2) ADA accessible facility; (3) Public seating may be limited.

FOR FURTHER INFORMATION CONTACT: Rob Miller, Designated Federal Officer, on (202) 501–4621, or Joddy Garner on (202) 501–4857, Per Diem Program Manager, General Services Administration. Also, inquiries may be sent to *robl.miller@gsa.gov.*

Dated: July 29, 2002.

Peggy DeProspero,

Acting Director of Travel Management Policy, Office of Transportation and Personal Property.

[FR Doc. 02–19568 Filed 8–1–02; 8:45 am]

BILLING CODE 6820–14–P

DEPARTMENT OF HEALTH AND HUMAN SERVICES

Administration on Aging

[Program Announcement No. AoA–02–11]

Fiscal Year 2002 Program Announcement; Availability of Funds and Notice Regarding Applications

AGENCY: Administration on Aging, HHS.

ACTION: Announcement of availability of funds and request for applications.

SUMMARY: The Administration on Aging announces that under this program announcement it will hold a competition for a grant award for one project at a federal share of approximately $100,000 per year for a project period of one year.

Legislative authority: The Older Americans Act, Public Law 106–501 (Catalog of Federal Domestic Assistance 93.048, Title IV and Title II Discretionary Projects).

Purpose of grant awards: The purpose of the project is to support the development of an action plan to raise osteoporosis awareness in post-menopausal women. The grant will assist AoA in the development and implementation of effective strategies to raise awareness about osteoporosis in post-menopausal women.

Eligibility for grant awards and other requirements: Eligibility to apply under this announcement is limited to applications from public and non-profit organizations, including Indian tribes, tribal organizations, tribal faith groups, faith-based and community-based organizations, with demonstrated expertise in osteoporosis education and awareness.

Grantees are required to provide a 25% non-federal match.

DATES: The deadline date for the submission of applications is September 16, 2002.

ADDRESSES: Application kits are available by writing to the U.S. Department of Health and Human Services, Administration on Aging, Center for Communication and Consumer Services, 330 Independence Ave., SW., Washington, DC 20201, Attn: Sherri Clark, or by calling 202/619–3955. Applications must be mailed or hand-delivered to the Office of Grants Management at the same address. Instructions for electronic mailing of grant applications are available at *http://www.aoa.gov/egrants.*

Dated: July 29, 2002.

Josefina G. Carbonell,

Assistant Secretary for Aging.

[FR Doc. 02–19505 Filed 8–1–02; 8:45 am]

BILLING CODE 4154–01–P

DEPARTMENT OF HEALTH AND HUMAN SERVICES

Centers for Disease Control and Prevention

[30 DAY–37–02]

Agency Forms Undergoing Paperwork Reduction Act Review

The Centers for Disease Control and Prevention (CDC) publishes a list of information collection requests under review by the Office of Management and Budget (OMB) in compliance with the Paperwork Reduction Act (44 U.S.C. Chapter 35). To request a copy of these requests, call the CDC Reports Clearance Officer at (404) 498–1210. Send written comments to CDC, Desk Officer, Human Resources and Housing Branch, New Executive Office Building, Room 10235, Washington, DC 20503. Written comments should be received within 30 days of this notice.

Proposed Project

National Hospital Discharge Survey (OMB No. 0920–0212)—Extension—National Center for Health Statistics (NCHS), Centers for Disease Control and Prevention (CDC). The National Hospital Discharge Survey (NHDS), which has been conducted continuously by the National Center for Health Statistics, CDC, since 1965, is the principal source of data on in-patient utilization of short-stay, non-Federal hospitals and is the only annual source of nationally representative estimates on the characteristics of discharges, the lengths of stay, diagnoses, surgical and non-surgical procedures, and the patterns of use of care in hospitals in various regions of the country. It is the benchmark against which special programmatic data sources are compared. Data collected through the NHDS are essential for evaluating health status of the population, for the planning of programs and policy to elevate the health status of the Nation, for studying morbidity trends, and for research activities in the health field. NHDS data have been used extensively in the development and monitoring of goals for the Year 2000 and 2010 Health Objectives. In addition, NHDS data provide annual updates for numerous tables in the Congressionally-mandated NCHS report, *Health, United States.* Data for the NHDS are collected annually on approximately 300,000 discharges from a nationally representative sample of noninstitutional hospitals, exclusive of Federal, military and Veterans' Administration hospitals. The data items collected are the basic core of variables contained in the Uniform Hospital Discharge Data Set (UHDDS) in addition to two data items (admission type and source) which are identical to those needed for billing of in-patient services for Medicare patients. Data for approximately forty-five percent of the responding hospitals are abstracted from medical records while the remainder of the hospitals supply data through commercial abstract service organizations, state data systems, in-house tapes or printouts. The estimated annual burden for this data collection is 2,653 hours.

Form	Number of Respondents	Number of Responses/Respondents	Average Burden/Response (in hours)
Medical record abstracts—Primary Procedure Hospitals	68	250	5/60
Medical record abstracts—Alternate Procedure Hospitals	130	250	1/60
Medical record abstracts—In-house tape or printout hospitals	80	12	12/60
Update form (abstract service hospitals)	156	1	2/60
Induction form	15	1	2
Inpatient Drug Study	50	22	20/60

Form	Number of Respondents	Number of Responses/Respondents	Average Burden/Response (in hours)
Non-response Study	50	1	2

Dated: July 29, 2002.

Nancy Cheal,

Acting Associate Director for Policy, Planning and Evaluation, Centers for Disease Control and Prevention.

[FR Doc. 02–19514 Filed 8–1–02; 8:45 am]

BILLING CODE 4163–18–P

DEPARTMENT OF HEALTH AND HUMAN SERVICES

Centers for Disease Control and Prevention

[Program Announcement 02175]

Disease, Disability, and Injury Prevention and Control Special Emphasis Panel: Applied Research on Antimicrobial Resistance : Validation of National Committee for Clinical Laboratory Standards Breakpoints for Human Pathogens of Public Health Importance

In accordance with section 10(a)(2) of the Federal Advisory Committee Act (Pub. L. 92–463), the Centers for Disease Control and Prevention (CDC) announces the following meeting:

Name: Disease, Disability, and Injury Prevention and Control Special Emphasis Panel (SEP): Applied Research on Antimicrobial Resistance (AR): Validation of National Committee for Clinical Laboratory Standards (NCCLS) Breakpoints for Human Pathogens of Public Health Importance, PA 02175

Times And Date: 8:30 a.m.–9 a.m., August 22, 2002 (Open); 9:15 a.m.–12:00 p.m., August 22, 2002 (Closed).

Place: Atlanta Airport Hilton, 1031 Virginia Avenue, Atlanta, GA 30354.

Status: Portions of the meeting will be closed to the public in accordance with provisions set forth in section 552b(c)(4) and (6), Title 5 U.S.C., and the Determination of the Director, Management Analysis and Services Office, CDC, pursuant to Public Law 92–463.

Matters to be Discussed: The meeting will include the review, discussion, and evaluation of applications received in response to PA 02175.

Contact Person for More Information: Marsha A. Jones, Health Scientist, National Center for Infectious Diseases, CDC, 1600 Clifton Road, NE, MS C–12, Atlanta, Georgia 30333, 404–639–2603, e-mail: *maj4@cdc.gov*.

The Director, Management Analysis and Services Office has been delegated the authority to sign **Federal Register** notices pertaining to announcements of meetings and other committee management activities, for both the Centers for Disease Control and Prevention and the Agency for Toxic Substances and Disease Registry.

Dated: July 29, 2002.

John Burckhardt,

Acting Director, Management Analysis and Services Office.

[FR Doc. 02–19511 Filed 8–1–02; 8:45 am]

BILLING CODE 4163–18–P

DEPARTMENT OF HEALTH AND HUMAN SERVICES

Centers for Disease Control and Prevention

Disease, Disability, and Injury Prevention and Control Special Emphasis Panel: Interventional Epidemiologic Research Studies To Reduce Mother-to-Child HIV–1 Transmission and Improve Infant Survival in Resource-Limited Countries of High HIV–1 Seroprevalence, Program Announcement 02074

In accordance with section 10(a)(2) of the Federal Advisory Committee Act (Pub. L. 92–463), the Centers for Disease Control and Prevention (CDC) announces the following meeting:

Name: Disease, Disability, and Injury Prevention and Control Special Emphasis Panel (SEP): Interventional Epidemiologic Research Studies to Reduce Mother-to-Child HIV–1 Transmission and Improve Infant Survival in Resource-Limited Countries of High HIV–1 Seroprevalence, Program Announcement 02074.

Times and Dates: 9 a.m.–9:30 a.m., August, 28, 2002 (Open) 9:30 a.m.–4:30 p.m., August 28, 2002 (Closed).

Place: Double Tree Hotel, 3342 Peachtree Road, NE, Atlanta, GA.

Status: Portions of the meeting will be closed to the public in accordance with provisions set forth in section 552b(c)(4) and (6), Title 5 U.S.C., and the Determination of the Director, Management Analysis and Services Office, CDC, pursuant to Public Law 92–463.

Matters To Be Discussed: The meeting will include the review, discussion, and evaluation of applications received in response to PA# 02074.

Contact Person for More Information: Beth Wolfe, Prevention Support Office, National Center for HIV, STD, and TB Prevention, CDC, 1600 Clifton Road NE MS E–07, Atlanta, Georgia 30333, 404–639–8025.

The Director, Management Analysis and Services Office has been delegated the authority to sign **Federal Register** notices pertaining to announcements of meetings and other committee management activities, for both the Centers for Disease Control and Prevention and the Agency for Toxic Substances and Disease Registry.

Dated: July 29, 2002.

John Burckhardt,

Acting Director, Management Analysis and Services Office, Centers for Disease Control and Prevention (CDC).

[FR Doc. 02–19512 Filed 8–1–02; 8:45 am]

BILLING CODE 4163–18–P

DEPARTMENT OF HEALTH AND HUMAN SERVICES

Centers for Disease Control and Prevention

Science and Program Review Subcommittee (SPRS) and the Advisory Committee for Injury Prevention and Control (ACIPC): Meetings

In accordance with section 10(a)(2) of the Federal Advisory Committee Act (Pub. L. 92–463), the Centers for Disease Control and Prevention (CDC) announces the following subcommittee and committee meetings:

Name: Science and Program Review Subcommittee to ACIPC.

Time and Dates: 6:30 p.m.–9 p.m., August 18, 2002. 9 a.m.–12 p.m., August 19, 2002.

Place: The Westin Atlanta Airport, 4736 Best Road, College Park, Georgia 30337.

Status: Open: 6:30 p.m.–7 p.m., August 18, 2002. Closed: 7 p.m.–9 p.m., August 18, 2002, through 12 p.m., August 19, 2002.

Purpose: The Subcommittee provides advice on the needs, structure, progress and performance of the National Center for Injury Prevention and Control (NCIPC) programs. The Subcommittee provides second-level scientific and programmatic review for applications for research grants, cooperative agreements, and training grants related to injury control and violence prevention, and recommends approval of projects that merit further consideration for funding support. The Subcommittee also advises on priorities for research to be supported by contracts, grants, and cooperative agreements and provides concept review of program proposals and announcements.

Matters To Be Discussed: Agenda items include updates on research and review activities, agenda for November meeting, and role of secondary reviewers. Beginning at 7 p.m., August 18, through 12 p.m., August 19, the Subcommittee will conduct a secondary review and discuss the results of Injury Control Research Center (ICRC) mid-course reviews of continuing applications of two Centers; results of an Injury Research Grant Review Committee (IRGRC) review of an ICRC that submitted a revised application; results of the IRGRC review of individual research grant applications; results of reviews by NCIPC Disease, Disability, and Injury Prevention and Control Special Emphasis Panels; and Small Business Innovation Research applications. This portion of the meeting will be closed to the public in accordance with provisions set forth in section 552b(c)(4) and (6), title 5 U.S.C., and the Determination of the Acting Director, Management Analysis and Services Office, CDC, pursuant to Pub. L. 92–463.

Name: Advisory Committee for Injury Prevention and Control.

Time and Date: 1:00 p.m.–2:30 p.m., August 19, 2002.

Place: The Westin Atlanta Airport, 4736 Best Road, College Park, Georgia 30337.

Status: Open: 1 p.m.–1:45 p.m., August 19, 2002.

Closed: 1:45 p.m.–2:30 p.m., August 19, 2002.

Purpose: The Committee advises and makes recommendations to the Secretary, Health and Human Services; the Director, CDC; and the Director, NCIPC; regarding feasible goals for the prevention and control of injury. The Committee makes recommendations regarding policies, strategies, objectives, and priorities, and reviews progress toward injury prevention and control. The Committee provides advice on the appropriate balance of intramural and extramural research, and also provides guidance on the needs, structure, progress and performance of intramural programs, and on extramural scientific program matters. The Committee provides second-level scientific and programmatic review for applications for research grants, cooperative agreements, and training grants related to injury control and violence prevention, and recommends approval of projects that merit further consideration for funding support. The Committee also recommends areas of research to be supported by contracts and cooperative agreements and provides concept review of program proposals and announcements.

Matters To Be Discussed: Agenda items include an update on Center activities from the Director, NCIPC. Beginning at 1:45 p.m. through 2:30 p.m., August 19, the Committee will vote on results of the secondary review. This portion of the meeting will be closed to the public in accordance with provisions set forth in section 552b(c)(4) and (6), title 5 U.S.C., and the Determination of the Acting Director, Management Analysis and Services Office, CDC, pursuant to Pub. L. 92–463.

Agenda items are subject to change as priorities dictate.

Contact Person for More Information: Ms. Louise Galaska, Executive Secretary, ACIPC, NCIPC, CDC, 4770 Buford Highway, NE, M/S K02, Atlanta, Georgia 30341–3724, telephone 770/488–4694.

The Director, Management Analysis and Services Office, has been delegated the authority to sign **Federal Register** notices pertaining to announcements of meetings and other committee management activities, for both the Centers for Disease Control and Prevention and the Agency for Toxic Substances and Disease Registry.

Dated: July 25, 2002.

John Burckhardt,

Acting Director, Management Analysis and Services Office, Centers for Disease Control and Prevention.

[FR Doc. 02–19513 Filed 8–1–02; 8:45 am]

BILLING CODE 4163–18–P

DEPARTMENT OF HEALTH AND HUMAN SERVICES

Centers for Medicare and Medicaid Services

[Document Identifier: CMS–R–21]

Agency Information Collection Activities: Proposed Collection; Comment Request

AGENCY: Centers for Medicare and Medicaid Services, HHS.

In compliance with the requirement of section 3506(c)(2)(A) of the Paperwork Reduction Act of 1995, the Centers for Medicare and Medicaid Services (CMS) (formerly known as the Health Care Financing Administration (HCFA)), Department of Health and Human Services, is publishing the following summary of proposed collections for public comment. Interested persons are invited to send comments regarding this burden estimate or any other aspect of this collection of information, including any of the following subjects: (1) The necessity and utility of the proposed information collection for the proper performance of the agency's functions; (2) the accuracy of the estimated burden; (3) ways to enhance the quality, utility, and clarity of the information to be collected; and (4) the use of automated collection techniques or other forms of information technology to minimize the information collection burden.

Type of Information Collection Request: Extension of a currently approved collection; *Title of Information Collection:* Withholding Medicare Payments to Recover Medicaid Overpayments and Supporting Regulations in 42 CFR 447.31; *Form No.:* CMS–R–21 (OMB# 0938–0287); *Use:* Overpayments may occur in either the Medicare and Medicaid program, at times resulting in a situation where an institution or person that provides services owes a repayment to one program while still receiving reimbursement from the other. Certain Medicaid providers that are subject to offsets for the collection of Medicaid overpayments may terminate or substantially reduce their participation in Medicaid, leaving the State Medicaid Agency unable to recover the amounts due. These information collection requirements give CMS the authority to recover Medicaid overpayments by offsetting payments due to a provider under the program; *Frequency:* On occasion; *Affected Public:* State, Local, or Tribal Government; *Number of Respondents:* 54; *Total Annual Responses:* 27; *Total Annual Hours:* 81.

To obtain copies of the supporting statement and any related forms for the proposed paperwork collections referenced above, access CMS's Web site address at *http://www.hcfa.gov/regs/prdact95.htm,* or e-mail your request, including your address, phone number, OMB number, and CMS document identifier, to *Paperwork@hcfa.gov,* or call the Reports Clearance Office on (410) 786–1326. Written comments and recommendations for the proposed information collections must be mailed within 60 days of this notice directly to the CMS Paperwork Clearance Officer designated at the following address: CMS, Office of Strategic Operations and Regulatory Affairs, Division of Regulations Development and Issuances, Attention: Julie Brown Attn: CMS–R–21, Room N2–14–26, 7500 Security Boulevard, Baltimore, Maryland 21244–1850.

Dated: July 25, 2002.

John P. Burke, III,

Paperwork Reduction Act Team Leader, CMS Reports Clearance Officer, Office of Strategic Operations and Strategic Affairs, Division of Regulations Development and Issuances.

[FR Doc. 02–19499 Filed 8–1–02; 8:45 am]

BILLING CODE 4120–03–P

DEPARTMENT OF HEALTH AND HUMAN SERVICES

Centers for Medicare and Medicaid Services

[Document Identifier: CMS–R–267]

Agency Information Collection Activities: Submission for OMB Review; Comment Request

AGENCY: Centers for Medicare and Medicaid Services, HHS.

In compliance with the requirement of section 3506(c)(2)(A) of the

Paperwork Reduction Act of 1995, the Centers for Medicare and Medicaid Services (CMS) (formerly known as the Health Care Financing Administration (HCFA), Department of Health and Human Services, is publishing the following summary of proposed collections for public comment. Interested persons are invited to send comments regarding this burden estimate or any other aspect of this collection of information, including any of the following subjects: (1) The necessity and utility of the proposed information collection for the proper performance of the agency's functions; (2) the accuracy of the estimated burden; (3) ways to enhance the quality, utility, and clarity of the information to be collected; and (4) the use of automated collection techniques or other forms of information technology to minimize the information collection burden.

Type of Information Collection Request: Extension of a currently approved collection; *Title of Information Collection:* Medicare Plus Choice Program Requirements Referenced in 42 CFR 422.000–422.700; *Form No.* CMS–R–267 (OMB# 0938–0753); *Use:* ction 4001 of the Balanced Budget Act of 1997 added sections 1851 through 1859 to the Social Security Act to establish a new Part C of the Medicare Program, known as the Medicare+Choice Program. Under this program, every individual entitled to Medicare Part A and enrolled under Part B may elect to receive benefits through either the existing Medicare fee-for-service program or a Part C M+C Plan. The regulations implementing these sections was published on June 26, 1998. The regulations revising these sections was published on February 17, 1999 and June 29, 2000; *Frequency:* As Needed; *Affected Public:* Business or other for-profit, Individuals or Households, federal government, not-for-profit institutions, State, Local or Tribal Gov't.; *Number of Respondents:* 2,450; *Total Annual Responses:* 7,657,534; *Total Annual Hours:* 2,120,006.

To obtain copies of the supporting statement and any related forms for the proposed paperwork collections referenced above, access CMS Web Site address at *http://www.hcfa.gov/regs/prdact95.htm,* or e-mail your request, including your address, phone number, OMB number, and CMS document identifier, to *Paperwork@hcfa.gov,* or call the Reports Clearance Office on (410) 786–1326. Written comments and recommendations for the proposed information collections must be mailed within 30 days of this notice directly to the OMB desk officer: OMB Human Resources and Housing Branch, Attention: Brenda Aguilar, New Executive Office Building, Room 10235, Washington, DC 20503.

Dated: July 24, 2002.

John P. Burke, III,

Paperwork Reduction Act Team Leader, CMS Reports Clearance Officer, CMS, Office of Information Services, Security and Standards Group, Division of CMS Enterprise Standards.

[FR Doc. 02–19500 Filed 8–1–02; 8:45 am]

BILLING CODE 4120–03–P

DEPARTMENT OF HEALTH AND HUMAN SERVICES

Centers for Medicare and Medicaid Services

[Document Identifier: CMS–282]

Agency Information Collection Activities: Submission for OMB Review; Comment Request

AGENCY: Centers for Medicare and Medicaid Services, HHS.

In compliance with the requirement of section 3506(c)(2)(A) of the Paperwork Reduction Act of 1995, the Centers for Medicare and Medicaid Services (CMS) (formerly known as the Health Care Financing Administration (HCFA), Department of Health and Human Services, is publishing the following summary of proposed collections for public comment. Interested persons are invited to send comments regarding this burden estimate or any other aspect of this collection of information, including any of the following subjects: (1) The necessity and utility of the proposed information collection for the proper performance of the agency's functions; (2) the accuracy of the estimated burden; (3) ways to enhance the quality, utility, and clarity of the information to be collected; and (4) the use of automated collection techniques or other forms of information technology to minimize the information collection burden.

Type of Information Collection Request: Extension of a currently approved collection; *Title of Information Collection:* Blood Bank Inspection Checklist and Report and Supporting Regulations in 42 CFR 493.1269–493.1285; *Form No.:* CMS–282 (OMB# 0938–0170); *Use:* The Clinical Laboratory Improvement Amendments (CLIA) of 1988 provides for inspections on an announced or unannounced basis regular hours of operation. All records and information having a bearing on whether the laboratory is being operated in accordance with the law can be requested by the surveyor. The CMS–282 is the Blood Bank Inspection Checklist and Report which is outlined in the CLIA of 1988; *Frequency:* Biennially; *Affected Public:* Not-for-profit institutions, Business or other for-profit, Federal Government, and State, Local, and Tribal Government; *Number of Respondents:* 1,363; *Total Annual Responses:* 1,363; *Total Annual Hours:* 682.

To obtain copies of the supporting statement and any related forms for the proposed paperwork collections referenced above, access CMS Web site address at *http://www.hcfa.gov/regs/prdact95.htm,* or e-mail your request, including your address, phone number, OMB number, and CMS document identifier, to *Paperwork@hcfa.gov,* or call the Reports Clearance Office on (410) 786–1326. Written comments and recommendations for the proposed information collections must be mailed within 30 days of this notice directly to the OMB desk officer: OMB Human Resources and Housing Branch, Attention: Brenda Aguilar, New Executive Office Building, Room 10235, Washington, DC 20503.

Dated: July 23, 2002.

John P. Burke, III,

Paperwork Reduction Act Team Leader, CMS Reports Clearance Officer, CMS Office of Information Services, Security and Standards Group, Division of CMS Enterprise Standards.

[FR Doc. 02–19501 Filed 8–1–02; 8:45 am]

BILLING CODE 4120–03–M

DEPARTMENT OF HEALTH AND HUMAN SERVICES

Centers for Medicare and Medicaid Services

[Document Identifier: CMS–R–232]

Agency Information Collection Activities: Submission for OMB Review; Comment Request

AGENCY: Centers for Medicare and Medicaid Services, HHS.

In compliance with the requirement of section 3506(c)(2)(A) of the Paperwork Reduction Act of 1995, the Centers for Medicare and Medicaid Services (CMS) (formerly known as the Health Care Financing Administration (HCFA), Department of Health and Human Services, is publishing the following summary of proposed collections for public comment. Interested persons are invited to send comments regarding this burden estimate or any other aspect of this collection of information, including any of the following subjects: (1) The

necessity and utility of the proposed information collection for the proper performance of the agency's functions; (2) the accuracy of the estimated burden; (3) ways to enhance the quality, utility, and clarity of the information to be collected; and (4) the use of automated collection techniques or other forms of information technology to minimize the information collection burden.

Type of Information Collection Request: Extension of a currently approved collection; *Title of Information Collection:* Medicare Program Integrity Program Organizational Conflict of Interest Disclosure Certificate and Supporting Regulations in 42 CFR 421.300 and 421.318; *Form No.:* CMS–R–232 (OMB #0938–0723); *Use:* This information is used to assess whether contractors who perform, or who seek to perform, Medicare Integrity Program functions, such as medical review, fraud review or cost audits, have organizational conflicts of interest and whether any conflicts have been resolved. The entities providing the information will be organizations that have been awarded, or seek award of, a Medicare Integrity Program contract; *Frequency:* On occasion; *Affected Public:* Businesses or other for profit; *Number of Respondents:* 5; *Total Annual Responses:* 5; *Total Annual Hours:* 1,000.

To obtain copies of the supporting statement and any related forms for the proposed paperwork collections referenced above, access CMS Web site address at *http://www.hcfa.gov/regs/prdact95.htm,* or e-mail your request, including your address, phone number, OMB number, and CMS document identifier, to *Paperwork@hcfa.gov,* or call the Reports Clearance Office on (410) 786–1326. Written comments and recommendations for the proposed information collections must be mailed within 30 days of this notice directly to the OMB desk officer: OMB Human Resources and Housing Branch, Attention: Brenda Aguilar, New Executive Office Building, Room 10235, Washington, DC 20503.

Dated: July 23, 2002.

John P. Burke, III,

Paperwork Reduction Act Team Leader, CMS Reports Clearance Officer, CMS Office of Information Services, Security and Standards Group, Division of CMS Enterprise Standards.

[FR Doc. 02–19502 Filed 8–1–02; 8:45 am]

BILLING CODE 4120–03–P

DEPARTMENT OF HEALTH AND HUMAN SERVICES

Centers for Medicare and Medicaid Services

[Document Identifier: CMS–R–65]

Agency Information Collection Activities: Submission for OMB Review; Comment Request

AGENCY: Centers for Medicare and Medicaid Services, HHS.

In compliance with the requirement of section 3506(c)(2)(A) of the Paperwork Reduction Act of 1995, the Centers for Medicare and Medicaid Services (CMS) (formerly known as the Health Care Financing Administration (HCFA), Department of Health and Human Services, is publishing the following summary of proposed collections for public comment. Interested persons are invited to send comments regarding this burden estimate or any other aspect of this collection of information, including any of the following subjects: (1) The necessity and utility of the proposed information collection for the proper performance of the agency's functions; (2) the accuracy of the estimated burden; (3) ways to enhance the quality, utility, and clarity of the information to be collected; and (4) the use of automated collection techniques or other forms of information technology to minimize the information collection burden.

Type of Information Collection Request: Extension of a currently approved collection; *Title of Information Collection:* Information Collection Requirements in Final Peer Review Organization Sanction Regulations—42 CFR 1004.40, 1004.50, 1004.60, and 1004.70; *Form No.:* CMS–R–65 (OMB# 0938–0444); *Use:* This final rule updates the procedures governing the imposition and adjudication of program sanctions predicated on the recommendations of Peer Review Organizations (PROs). These changes are being made as a result of statutory revisions designed to address health care fraud and abuse issues and the OIG sanction process; *Frequency:* On occasion; *Affected Public:* Not-for-profit institutions and Business or other for-profit; *Number of Respondents:* 53; *Total Annual Responses:* 1,060; *Total Annual Hours:* 22,684.

To obtain copies of the supporting statement and any related forms for the proposed paperwork collections referenced above, access CMS Web site address at *http://www.hcfa.gov/regs/prdact95.htm,* or e-mail your request, including your address, phone number, OMB number, and CMS document identifier, to *Paperwork@hcfa.gov,* or call the Reports Clearance Office on (410) 786–1326. Written comments and recommendations for the proposed information collections must be mailed within 30 days of this notice directly to the OMB desk officer: OMB Human Resources and Housing Branch, Attention: Brenda Aguilar, New Executive Office Building, Room 10235, Washington, DC 20503.

Dated: July 18, 2002.

John P. Burke, III,

Paperwork Reduction Act Team Leader, CMS Reports Clearance Officer, CMS, Office of Information Services, Security and Standards Group, Division of CMS Enterprise Standards.

[FR Doc. 02–19503 Filed 8–1–02; 8:45 am]

BILLING CODE 4120–03–P

DEPARTMENT OF HEALTH AND HUMAN SERVICES

Food and Drug Administration

[Docket No. 02n–0319]

Agency Information Collection Activities; Proposed Collection; Comment Request; Blood Establishment Registration and Product Listing, Form FDA 2830

AGENCY: Food and Drug Administration, HHS.

ACTION: Notice.

SUMMARY: The Food and Drug Administration (FDA) is announcing an opportunity for public comment on the proposed collection of certain information by the agency. Under the Paperwork Reduction Act of 1995 (the PRA), Federal agencies are required to publish notice in the **Federal Register** concerning each proposed collection of information, including each proposed extension of an existing collection of information, and to allow 60 days for public comment in response to the notice. This notice solicits comments on the information collection provisions relating to the blood establishment registration and product listing requirements and Form FDA 2830.

DATES: Submit written or electronic comments on the collection of information by October 1, 2002.

ADDRESSES: Submit written comments on the collection of information to the Dockets Management Branch (HFA–305), Food and Drug Administration, 5630 Fishers Lane, rm. 1061, Rockville, MD 20852. Submit electronic comments on the collection of information to *http://www.accessdata.fda.gov/scripts/*

oc/dockets/edockethome.cfm. All comments should be identified with the docket number found in brackets in the heading of this document.

FOR FURTHER INFORMATION CONTACT: JonnaLynn P. Capezzuto, Office of Information Resources Management (HFA–250), Food and Drug Administration, 5600 Fishers Lane, Rockville, MD 20857, 301–827–4659.

SUPPLEMENTARY INFORMATION: Under the PRA (44 U.S.C. 3501–3520), Federal agencies must obtain approval from the Office of Management and Budget (OMB) for each collection of information they conduct or sponsor. ''Collection of information'' is defined in 44 U.S.C. 3502(3) and 5 CFR 1320.3(c) and includes agency requests or requirements that members of the public submit reports, keep records, or provide information to a third party. Section 3506(c)(2)(A) of the PRA (44 U.S.C. 3506(c)(2)(A)) requires Federal agencies to provide a 60-day notice in the **Federal Register** concerning each proposed collection of information, including each proposed extension of an existing collection of information, before submitting the collection to OMB for approval. To comply with this requirement, FDA is publishing notice of the proposed collection of information set forth in this document.

With respect to the following collection of information, FDA invites comments on: (1) Whether the proposed collection of information is necessary for the proper performance of FDA's functions, including whether the information will have practical utility; (2) the accuracy of FDA's estimate of the burden of the proposed collection of information, including the validity of the methodology and assumptions used; (3) ways to enhance the quality, utility, and clarity of the information to be collected; and (4) ways to minimize the burden of the collection of information on respondents, including through the use of automated collection techniques when appropriate, and other forms of information technology.

Blood Establishment Registration and Product Listing, Form FDA 2830—21 CFR Part 607—(OMB Control Number 0910–0052)—Extension

Under section 510 of the Federal Food, Drug, and Cosmetic Act (21 U.S.C. 360), any person owning or operating an establishment that manufactures, prepares, propagates, compounds, or processes a drug or device must register with the Secretary of Health and Human Services, on or before December 31 of each year, his or her name, place of business and all such establishments, and submit, among other information, a listing of all drug or device products manufactured, prepared, propagated, compounded, or processed by him or her for commercial distribution. In part 607 (21 CFR part 607), FDA has issued regulations implementing these requirements for manufacturers of human blood and blood products.

Section 607.20(a) requires certain establishments that engage in the manufacture of blood products to register and to submit a list of blood products in commercial distribution. Section 607.21 requires the establishments entering into the manufacturing of blood products to register within 5 days after beginning such operation and to submit a blood product listing at that time. In addition, establishments are required to register annually between November 15 and December 31 and update their blood product listing every June and December. Section 607.22 requires the use of Form FDA 2830 for registration and blood product listing. Section 607.25 indicates the information required for establishment registration and blood product listing. Section 607.26 requires certain changes to be submitted as an amendment to the establishment registration within 5 days of such changes. Section 607.30 requires establishments to update, as needed, their blood product listing information every June and at the annual registration. Section 607.31 requires that additional blood product listing information be provided upon FDA request. Section 607.40 requires foreign blood product establishments to register and submit the blood product listing information, the name and address of the establishment, and the name of the individual responsible for submitting blood product listing information.

Among other uses, this information assists FDA in its inspections of facilities, and its collection is essential to the overall regulatory scheme designed to ensure the safety of the nation's blood supply. Form FDA 2830, Blood Establishment Registration and Product Listing, is used to collect this information. The likely respondents are blood banks, blood collection facilities, and blood component manufacturing facilities.

FDA estimates the burden of this collection of information based upon the database and past experience of the Center for Biologics Evaluation and Research, Division of Blood Applications in regulatory blood establishment registration and product listing. Most blood banks are familiar with the regulations and registration requirements to fill out this form.

TABLE 1.—ESTIMATED ANNUAL REPORTING BURDEN[1]

21 CFR Section	Form FDA 2830	No. of Respondents	Annual Frequency per Response	Total Annual Responses	Hours per Response	Total Hours
607.20(a), 607.21, 607.22, 607.25, and 607.40	Initial Registration	300	1	300	1	300
607.21, 607.22, 607.25, 607.26, 607.31, and 607.40	Re-registration	2,867	1	2,867	0.5	1,434
607.21, 607.25, 607.30, 607.31, and 607.40	Product Listing Update	75	1	75	0.25	19

TABLE 1.—ESTIMATED ANNUAL REPORTING BURDEN[1]—Continued

21 CFR Section	Form FDA 2830	No. of Respondents	Annual Frequency per Response	Total Annual Responses	Hours per Response	Total Hours
Total						1,753

[1]There are no capital costs or operating and maintenance costs associated with this collection of information.

Dated: July 26, 2002.

Margaret M. Dotzel,

Associate Commissioner for Policy.

[FR Doc. 02–19493 Filed 8–1–02; 8:45 am]

BILLING CODE 4160–01–S

DEPARTMENT OF HEALTH AND HUMAN SERVICES

Food and Drug Administration

Request for Nominations for Members of Public Advisory Committee; Food Advisory Committee

AGENCY: Food and Drug Administration, HHS.

ACTION: Notice.

SUMMARY: The Food and Drug Administration (FDA) is requesting nominations for members to serve on the Food Advisory Committee (the Committee) in FDA's Center for Food Safety and Applied Nutrition (CFSAN) and six subcommittees. Nominations will be accepted for current vacancies and vacancies that will or may occur on the Committee during the next 12 months.

FDA has special interest in ensuring that women, minority groups, and individuals with disabilities are adequately represented on advisory committees and, therefore, encourages nominations from these groups. Final selection from among qualified candidates for each vacancy will be determined by the expertise required to meet specific agency needs and in a manner to ensure appropriate balance of membership.

DATES: September 3, 2002.

ADDRESSES: All nominations for membership should be sent to Catherine M. DeRoever (*see* **FOR FURTHER INFORMATION CONTACT**).

FOR FURTHER INFORMATION CONTACT: *Regarding all nominations for membership*: Catherine M. DeRoever, Center for Food Safety and Applied Nutrition (HFS–6), Food and Drug Administration, 5100 Paint Branch Pkwy., College Park, MD 20740, 301–436–2397, FAX 301–436–2633, e-mail: *Catherine.DeRoever@cfsan.fda.gov*.

SUPPLEMENTARY INFORMATION: FDA is requesting nominations for members to serve on the advisory committees listed below. Individuals should have expertise in the activity of the Committee. Vacancies will begin June 30, 2002.

Food Advisory Committee

The Committee provides advice primarily to the Director, Center for Food Safety and Applied Nutrition (CFSAN), and as needed, to the Commissioner of Food and Drugs (the Commissioner), and other appropriate officials, on emerging food safety, food science, nutrition, and other food-related issues that FDA considers of primary importance for its food and cosmetics program. The Committee may be charged with reviewing and evaluating available data and making recommendations on matters such as those relating to: (1) Broad scientific and technical food or cosmetic related issues, (2) the safety of new foods and food ingredients, (3) labeling of foods and cosmetics, (4) nutrient needs and nutritional adequacy, and (5) safe exposure limits for food contaminants. The Committee also may be asked to provide advice and make recommendations on ways of communicating to the public the potential risks associated with these issues and on approaches that might be considered for addressing the issues.

The Committee was restructured on July 28, 2000, to consist of a ''parent'' Committee and four standing Subcommittees. The Subcommittees are as follows: (1) Additives and Ingredients, (2) Contaminants and Natural Toxicants, (3) Dietary Supplements, and (4) Food Biotechnology. Two additional Subcommittees are being added to the ''parent'' Committee: (1) Infant Formula, and (2) Nutrition.

The purpose of the new Subcommittees is to provide highly specialized expertise in the review and analysis of assigned topics. Meetings of the subcommittees will be open to the public except as otherwise determined by the Commissioner or designee. The Subcommittee's findings, conclusions, and recommendations will be reported to the ''parent'' Committee. As a general matter, included in this report will be a recommendation(s) from the Subcommittee on the final disposition of an assigned topic. Generally, matters that cross-cut agency program areas will fall under the purview of the ''parent'' Committee. Issues relating to the microbiological safety of food will be addressed by the National Advisory Committee on Microbiological Criteria for Foods.

Criteria for Members

Persons nominated for membership on the Committee shall be knowledgeable in the fields of physical sciences, biological and life sciences, food science, risk assessment and other relevant scientific and technical disciplines. The agency particularly is interested in considering candidates with a comprehensive background in food technology, molecular biology, genetics, biotechnology, and a variety of medical specialties, as many issues brought before the Committee involve medical or epidemiological impact on nutrients, additives, contaminants, or other constituents of the diet, such as dietary supplements. The term of office is up to 4 years.

The Committee includes technically qualified members who are identified with consumer interests and representatives of industry interests.

Nomination Procedures

Interested persons may nominate one or more qualified persons for membership on the Committee. Nominations shall state that the nominee is willing to serve as a member of the Committee and appears to have no conflict of interest that would preclude Committee membership. Additionally, the nominee's mailing address, telephone number, and curriculum vitae must accompany the nomination. The agency cannot guarantee further consideration of nominations that do not include this requested information. Potential candidates will be asked by FDA to provide detailed information concerning such matters as financial holdings, employment, consultancies, and research grants and/or contracts to permit evaluation of possible sources of conflicts of interest.

Industry Representatives

Regarding nominations for members representing industry interests, a letter will be sent to each person or

organization that has made a nomination and to other organizations that have expressed an interest in participating in the selection process together with a complete list of all such organizations and the nominees. The letter will state that it is the responsibility of each nominator or organization that has expressed an interest in participating in the selection process to consult with their peers to provide their selections representing industry interests within 60 days. In the event that selections have not been provided to FDA within 60 days, the Commissioner may select an industry representative for each such vacancy from the list of industry nominees. The agency is interested in nominees that possess the scientific credentials needed to participate fully and knowledgeably in the Committee's deliberations and had special insight into, and direct experience in, specific industrywide issues, practices, and concerns that might not otherwise be available to others not similarly situated.

This notice is issued under the Federal Advisory Committee Act (5 U.S.C. app. 2) and 21 CFR part 14, relating to advisory committees.

Dated: July 23, 2002.

Linda Arey Skladany,

Senior Associate Commissioner for External Relations.

[FR Doc. 02–19494 Filed 8–1–02; 8:45 am]

BILLING CODE 4160–01–S

DEPARTMENT OF HEALTH AND HUMAN SERVICES

Food and Drug Administration

FDA Food Labeling and Allergen Declaration; Public Workshop; Correction

AGENCY: Food and Drug Administration, HHS.

ACTION: Notice of public workshop; correction.

SUMMARY: The Food and Drug Administration (FDA) is correcting a notice that appeared in the **Federal Register** of Friday, March 29, 2002 (67 FR 15211). The document announced a public workshop entitled ''FDA Food Labeling and Allergen Declaration'' that intends to provide information about FDA food labeling regulations, allergen declaration, and other related matters to the regulated industry, particularly small business and startups. The document was published with some inadvertent errors. This document corrects those errors.

FOR FURTHER INFORMATION CONTACT: David Arvelo, Food and Drug Administration, 4040 North Central Expwy., suite 900, Dallas, TX 75204, 214–253–4952, FAX 214–253–4970.

SUPPLEMENTARY INFORMATION: In FR Doc. 02–7583, appearing on page 15211 in the **Federal Register** of Friday, March 29, 2002, the following correction is made:

1. On page 15211, in the third column, under ''Contact'', beginning in the fourth line, ''7920 Elmbrook Dr., suite 102, Dallas, TX 75247, 214–655–8100, ext. 130 or 128, FAX 214–655–8114,'' is corrected to read ''4040 North Central Expwy., suite 900, Dallas, TX 75204, 214–253–4952, FAX 214–253–4970,''.

Dated: July 26, 2002.

Margaret M. Dotzel,

Associate Commissioner for Policy.

[FR Doc. 02–19495 Filed 8–1–02; 8:45 am]

BILLING CODE 4160–01–S

DEPARTMENT OF HEALTH AND HUMAN SERVICES

Food and Drug Administration

Establishment of Prescription Drug User Fee Rates for Fiscal Year 2003

AGENCY: Food and Drug Administration, HHS.

ACTION: Notice.

SUMMARY: The Food and Drug Administration (FDA) is announcing the rates for prescription drug user fees for fiscal year (FY) 2003. The Federal Food, Drug, and Cosmetic Act (the act), as amended most recently by the Prescription Drug User Fee Amendments of 2002 (Title 5 of the Public Health Security and Bioterrorism Preparedness and Response Act of 2002 (PHSBPRA or PDUFA III)), authorizes FDA to collect user fees for certain applications for approval of drug and biological products, on establishments where the products are made, and on such products. This notice establishes fee rates by PDUFA for FY 2003 for application fees ($533,400 for an application requiring clinical data, and $266,700 for an application not requiring clinical data or a supplement requiring clinical data), establishment fees ($209,900), and product fees ($32,400). These fees are effective on October 1, 2002, and will remain in effect through September 30, 2003. For applications and supplements that are submitted on or after October 1, 2002, the new fee schedule must be used. Invoices for establishment and product fees for FY 2003 will be issued in August 2002 using the new fee schedule.

FOR FURTHER INFORMATION CONTACT: Frank Claunts, Office of Management and Systems (HFA–20), Food and Drug Administration, 5600 Fishers Lane, Rockville, MD 20857, 301–827–4427.

SUPPLEMENTARY INFORMATION:

I. Background

Sections 735 and 736 of the act (21 U.S.C. 379g and 379h), establish three different kinds of user fees. Fees are assessed on: (1) Certain types of applications and supplements for approval of drug and biological products, (2) certain establishments where such products are made, and (3) certain products (21 U.S.C. 379h(a)). When certain conditions are met, FDA may waive or reduce fees (21 U.S.C. 379h(d)). For FY 2003 through FY 2007 revenue amounts for application fees, establishment fees, and product fees are established by PDUFA III. Revenue amounts established for years after FY 2003 are subject to adjustment for inflation and workload. Fees for applications, establishments, and products are to be established each year by FDA so that revenues from each category will approximate the levels established in the statute, after those amounts have been first adjusted for inflation and workload. The revenue levels established by PDUFA III continue the arrangement under which one-third of the total user fee revenue is projected to come from each of the three types of fees: Application fees, establishment fees, and product fees.

This notice establishes fee rates for FY 2003 for application, establishment, and product fees. These fees are effective on October 1, 2002, and will remain in effect through September 30, 2003.

II. Inflation and Workload Adjustment Process

PDUFA III provides that fee revenue amounts for each FY after 2003 shall be adjusted for inflation. The adjustment must reflect the greater of : (1) The total percentage change that occurred in the Consumer Price Index (CPI) (all items; U.S. city average) during the 12-month period ending June 30 preceding the FY for which fees are being set, or (2) the total percentage pay change for the previous FY for Federal employees stationed in the Washington, DC metropolitan area. PDUFA III provides for this annual adjustment to be cumulative and compounded annually after 2003 (see 21 U.S.C. 379h(c)(1)). No inflation adjustment is to be made with respect to fee revenue amounts established in the statute for FY 2003.

For each FY beginning in FY 2004, PDUFA III provides that fee revenue amounts, after they have been adjusted for inflation, shall be further adjusted to reflect changes in workload for the process for the review of human drug applications (see 21 U.S.C. 379h(c)(2)). No workload adjustment is to be made with respect to fee revenue amounts established in the statute for FY 2003.

Since neither inflation nor workload adjustments apply to the revenue amounts established in PDUFA III for FY 2003, the levels specified in the statute are the amounts that fees set by FDA for FY 2003 should generate. Those statutory revenue amounts are $74,300,000 from application fees, $74,300,000 from establishment fees, and $74,300,000 from product fees.

III. Fee Calculations

PDUFA III provides that the fee rates for application, product, and establishment fees be established 60 days before the beginning of each FY (21 U.S.C. 379h(c)(4)). The fees are to be established so that they will generate the fee revenue amounts specified in the statute, as adjusted for inflation and workload.

A. Application Fee Revenues and Application Fees

Application fees are assessed at different rates for qualifying applications depending on whether the applications require clinical data for safety or effectiveness (other than bioavailability or bioequivalence studies) (21 U.S.C. 379h(a)(1)(A)). Applications that require clinical data are subject to the full application fee. Applications that do not require clinical data and supplements that require clinical data are assessed one-half the fee of applications that require clinical data. If FDA refuses to file an application or supplement, 75 percent of the application fee is refunded to the applicant (21 U.S.C. 379h(a)(1)(D)).

The application fee revenue amount that PDUFA III established for FY 2003 is $74,300,000 (21 U.S.C. 379h(b)). For FY 2003 no adjustment is to be made for either inflation or workload changes (21 U.S.C. 379h(c)). Application fees for FY 2003 will be set to generate $74,300,000.

B. Estimate of Numbers of Fee-Paying Applications and Establishment of Application Fees

For FY 2003 through FY 2007, FDA will estimate the total number of fee-paying full application equivalents (FAEs) it expects to receive each year by averaging the number of fee-paying FAEs received in each of the five most recent FYs. This use of the rolling average of the five most recent FYs is the same method that will also be applied in future years in making the workload adjustment.

In estimating the number of fee-paying FAEs that FDA will receive in FY 2003, the 5-year rolling average for the most recent 5 years will be based on actual counts of fee-paying FAEs received for FYs 1998 through 2001. For FY 2002, FDA is estimating the number of fee-paying FAEs for the full year based on the actual count for the first 9 months and estimating the number for the final 3 months.

Table 1, under column 2 of this document, shows the total number of each type of FAE received in the first 9 months of FY 2002, whether fees were paid or not. Column 3 shows the number of FAEs for which fees were waived or exempted during this period, and column 4 shows the number of fee-paying FAEs received through June 30, 2002. The last column estimates the 12-month total fee-paying FAEs for FY 2003 based on the applications received through June 30, 2002. All of the counts are in FAEs. A full application requiring clinical data counts as one FAE. An application not requiring clinical data counts one-half an FAE, as does a supplement requiring clinical data. An application that is withdrawn or refused for filing counts as one-fourth of an FAE if it initially paid a full application fee, or one-eighth of an FAE if it initially paid one-half of the full application fee amount.

TABLE 1.—FY 2002 FULL APPLICATION EQUIVALENTS (FAES) RECEIVED THROUGH JUNE 30, 2002, AND PROJECTION

Application or Action	Total FAEs Received Through June 30, 2002	Fee Exempt or Waived FAEs Through June 30, 2002	Total Fee Paying FAEs Through June 30, 2002	12-Month Projection for Fee-Paying FAEs
Applications requiring clinical data	65.00	18.00	47.00	62.667
Applications not requiring clinical data	9.00	3.00	6.00	8.00
Supplements requiring clinical data	43.50	11.00	32.50	43.333
Withdrawn or refused to file	0.75	0.25	0.50	0.667
Total	118.25	32.25	86.00	114.67

In the first 9 months of FY 2002, FDA received 118.25 FAEs, of which 86 were fee-paying. Based on data from the last 5 FYs, on average, 25 percent of the applications submitted each year come in the final 3 months. Thus, dividing 86 by 3 and multiplying by 4 extrapolates the amount to the full 12 months of the FY and projects the number of fee-paying FAEs in FY 2002 at 114.7.

All pediatric supplements, which had been exempt from fees prior to January 4, 2002, were required to pay fees effective January 4, 2002. This is the result of section 5 of the Best Pharmaceuticals for Children Act that repealed the fee exemption for pediatric supplements effective January 4, 2002. Thus, in estimating FY 2003 fee-paying receipts we must assume all the pediatric supplements that were previously exempt from fees will be subject to fees in FY 2003. In FY 1998, 8 full fees were exempted for pediatric supplements; the exempted number of FAEs for pediatric supplements for FY 1999, FY 2000, FY 2001, and FY 2002, respectively, were 5.25, 12.5, 19, and 4.5. Since fees on these supplements will be paid for pediatric applications submitted in FY 2003, the number of pediatric supplement FAEs exempted from fees each year from FY 1998 through FY 2002 (the only years when fees were exempted) are added to the total of fee-paying FAEs received each year.

As table 2 of this document shows, the average number of fee-paying FAEs

received annually in the most recent 5-year period, assuming all pediatric supplements had paid fees, and including our estimate for FY 2002, is 139.3 FAEs. FDA will set fees for FY 2003 based on this estimate as the number of full application equivalents that will pay fees.

TABLE 2.

Type of FAE	1998	1999	2000	2001	2002	5-year Average
Fee-paying FAEs	118.7	153.0	153.4	107.6	114.7	129.5
Exempt pediatric supplement FAEs	8.0	5.3	12.5	19.0	4.5	9.9
Total	126.7	158.3	165.9	126.6	119.2	139.3

The FY 2003 application fee is estimated by dividing the estimated number of full applications that will pay fees, 139.3, into the statutorily set amount to be derived from application fees in FY 2003, $74,300,000. The result, rounded to the nearest one hundred dollars, is a fee of $533,400 per full application requiring clinical data, and $266,700 per application not requiring clinical data or per supplement requiring clinical data.

IV. Adjustment for Excess Collections in Previous Years

Under the provisions of PDUFA, as amended, if the agency collects more fees than were provided for in appropriations in any year after 1997, FDA is required to reduce its anticipated fee collections in a subsequent year by that amount (21 U.S.C. 379h(g)(4)).

In FY 1998, Congress appropriated a total of $117,122,000 to FDA in PDUFA fee revenue. To date, collections for FY 1998 total $117,737,470—a total of $615,470 in excess of the appropriation limit. This is the only FY since 1997 in which FDA has collected more in PDUFA fees than Congress appropriated.

FDA also has requests for waivers or reductions of FY 1998 fees that have been decided but that are pending appeals. For this reason, FDA is not reducing its FY 2003 fees to offset excess collections at this time. An offset will be considered in a future year, if FDA still has collections in excess of appropriations for FY 1998 after the pending appeals for FY 1998 waivers and reductions have been resolved.

V. Fee Calculations for Establishment and Product Fees

A. Establishment Fees

At the beginning of FY 2002, the establishment fee was based on an estimate that 354 establishments would be subject to and would pay fees. By the end of FY 2002, FDA estimates that 379 establishments will have been billed for establishment fees, before all decisions on requests for waivers or reductions are made. FDA again estimates that a total of 25 establishment fee waivers or reductions will be made for FY 2002, for a net of 354 fee-paying establishments. FDA will use this number, 354, for its FY 2003 estimate of establishments paying fees, after taking waivers and reductions into account. The fee per establishment is determined by dividing the adjusted total fee revenue to be derived from establishments ($74,300,000), by the estimated 354 establishments, for an establishment fee rate for FY 2003 of $209,900 (rounded to the nearest one hundred dollars).

B. Product Fees

At the beginning of FY 2002, the product fee was based on an estimate that 2,293 products would be subject to and pay product fees. By the end of FY 2002, FDA estimates that 2,348 products will have been billed for product fees, before all decisions on requests for waivers or reductions are made. Assuming that there will be about 55 waivers and reductions made, FDA estimates that 2,293 products will qualify for product fees in FY 2002, after allowing for waivers and reductions, and will use this number for its FY 2003 estimate. Accordingly, the FY 2003 product fee rate is determined by dividing the adjusted total fee revenue to be derived from product fees ($74,300,000) by the estimated 2,293 products for a product fee rate of $32,400 (rounded to the nearest ten dollars).

VI. Fee Schedule for FY 2003

The fee rates for FY 2003 are set out in table 3 of this document:

TABLE 3.

Fee Category	Fee rates for FY 2003
Applications	
Requiring clinical data	$533,400
Not requiring clinical data	$266,700
Supplements requiring clinical data	$266,700
Establishments	$209,900
Products	$32,400

VII. Implementation of Adjusted Fee Schedule

A. Application Fees

Any application or supplement subject to fees under PDUFA that is submitted after September 30, 2002, must be accompanied by the appropriate application fee established in the new fee schedule. Payment must be made in U.S. currency by check, bank draft, or U.S. postal money order payable to the order of the U.S. Food and Drug Administration. Please include the user fee ID number on your check. Your check can be mailed to: U.S. Food and Drug Administration, P.O. Box 360909, Pittsburgh, PA 15251–6909.

If checks are to be sent by a courier that requests a street address, the courier can deliver the checks to: U.S. Food and Drug Administration (360909), Mellon Client Service Center, rm. 670, 500 Ross St., Pittsburgh, PA 15262–0001. (Note: This Mellon Bank address is for courier delivery only.)

Please make sure that the FDA P.O. Box number (P.O. Box 360909) is on the enclosed check. The tax identification number of the U.S. Food and Drug Administration is 530 19 6965.

B. Establishment and Product Fees

By August 31, 2002, FDA will issue invoices for establishment and product fees for FY 2003 under the new fee schedule. Payment will be due on October 1, 2002. FDA will issue invoices in October 2003 for any products and establishments subject to fees for FY 2003 that qualify for fees after the August 2002 billing.

Dated: July 30, 2002.

Margaret M. Dotzel,

Associate Commissioner for Policy.

[FR Doc. 02–19594 Filed 7–31–02; 9:59 am]

BILLING CODE 4160–01–S

DEPARTMENT OF HEALTH AND HUMAN SERVICES

Health Resources and Services Administration

Agency Information Collection Activities: Proposed Collection: Comment Request

In compliance with the requirement for opportunity for public comment on proposed data collection projects (section 3506(c)(2)(A) of Title 44, United States Code, as amended by the Paperwork Reduction Act of 1995, Public Law 104–13), the Health Resources and Services Administration (HRSA) publishes periodic summaries of proposed projects being developed for submission to OMB under the Paperwork Reduction Act of 1995. To request more information on the proposed project or to obtain a copy of the data collection plans and draft instruments, call the HRSA Reports Clearance Officer on (301) 443–1129.

Comments are invited on: (a) Whether the proposed collection of information is necessary for the proper performance of the functions of the agency, including whether the information shall have practical utility; (b) the accuracy of the agency's estimate of the burden of the proposed collection of information; (c) ways to enhance the quality, utility, and clarity of the information to be collected; and (d) ways to minimize the burden of the collection of information on respondents, including through the use of automated collection techniques or other forms of information technology.

Proposed Project: The Health Professions Student Loan (HPSL) and Nursing Student Loan (NSL) Programs: Forms—(OMB No.0915–0044)—Revision

The HPSL Program provides long-term, low-interest loans to students attending schools of medicine, osteopathic medicine, dentistry, veterinary medicine, optometry, podiatric medicine, and pharmacy. The NSL Program provides long-term, low-interest loans to students who attend eligible schools of nursing in programs leading to a diploma in nursing, and an associate degree, a baccalaureate degree, or a graduate degree in nursing. Participating HPSL and NSL schools are responsible for determining eligibility of applicants, making loan, and collecting monies owed by borrowers on their outstanding loans. The deferment form (HRSA form 519) provides the schools with documentation of a borrower's eligibility for deferment. The Annual Operating Report (AOR–HRSA form 501) provides the Federal Government with information from participating and non-participating schools (schools that are no longer granting loans but are required to report and maintain program records, student records, and repayment records until all student loans are repaid in full and all monies due the Federal Government are returned) relating to HPSL and NSL program operations and financial activities.

The estimates of burden for the forms are as follows:

Form and number	Number of respondents	Responses per respondent	Total responses	Hours per responses	Total burden hours
Defer-HRSA–519	6,000	1	6,000	10 min	1,000
AOR–HRSA–501	1,048	1	1,048	4 hrs.	4,192
Total Burden	7,048		7,048		5,192

Send comments to Susan G. Queen, Ph.D., HRSA Reports Clearance Officer, Room 11A–33, Parklawn Building, 5600 Fishers Lane, Rockville, MD 20857. Written comments should be received within 60 days of this notice.

Dated: July 25, 2002.

Jane M. Harrison,

Director, Division of Policy Review and Coordination.

[FR Doc. 02–19496 Filed 8–1–02; 8:45 am]

BILLING CODE 4165–15–P

DEPARTMENT OF HEALTH AND HUMAN SERVICES

Health Resources and Services Administration

Agency Information Collection Activities: Submission for OMB Review; Comment Request

Periodically, the Health Resources and Services Administration (HRSA) publishes abstracts of information collection requests under review by the Office of Management and Budget, in compliance with the Paperwork Reduction Act of 1995 (44 U.S.C. Chapter 35). To request a copy of the clearance requests submitted to OMB for review, call the HRSA Reports Clearance Office on (301) 443–1129.

The following request has been submitted to the Office of Management and Budget for review under the Paperwork Reduction Act of 1995:

Proposed Project: The National Health Service Corps (NHSC) Professional Training and Information Questionnaire (PTIQ) (OMB No. 0915–0208)—Revision

The NHSC of the HRSA's Bureau of Health Professions (BHPr), is committed to improving the health of the Nation's underserved by uniting communities in need with caring health professionals and by supporting communities' efforts to build better systems of care.

The NHSC (authorized by the Public Health Service Act, section 331) collects data on its programs to ensure compliance with legislative mandates and to report to Congress and policy makers on program accomplishments. To meet these objectives, the NHSC requires a core set of information collected annually that is appropriate for monitoring and evaluating performance and reporting on annual trends.

The PTIQ is used to collect data related to professional practice from NHSC Scholarship Program recipients including physicians, dentists, physician assistants (PAs), nurse practioners (Nps), and certified nurse midwives (CNMs), in the current year's placement cycle. This data is used to match an individual health care professional with an appropriate clinical practice setting.

The PTIQ will be mailed twelve months in advance of the intended service availability date.

Estimates of annualized reporting burden are as follows:

Type of respondent	Number of respondents	Responses per respondent	Hours per response (minutes)	Total burden hours
Physicians and Dentists	186	1	5	15.5 (16)
NPs, PAs, CNMs	125	1	5	10.42 (10)
Health Care Professionals	311			26

Written comments and recommendations concerning the proposed information collection should be sent within 30 days of this notice to: John Morrall, Human Resources and Housing Branch, Office of Management and Budget, New Executive Office Building, Room 10235, Washington, DC 20503.

Dated: July 26, 2002.

Jane M. Harrison,

Director, Division of Policy Review and Coordination.

[FR Doc. 02–19497 Filed 8–1–02; 8:45 am]

BILLING CODE 4165–15–P

DEPARTMENT OF HEALTH AND HUMAN SERVICES

Health Resources and Services Administration

Health Professions and Nurse Education Special Emphasis Panels; Meetings; Addendum and Correction

In **Federal Register** Document 01–28108, appearing on pages 56689–56690 in the issue for Friday, November 9, 2001, the following meetings of the Health Professions and Nurse Education Special Emphasis Panel are added:

Name: Cooperative Agreements for Health Workforce Research.

Date and Time: August 12–15, 2002.

Place: Hilton Silver Spring, 8727 Colesville Road, Silver Spring, MD 20910.

Open on: August 12, 2002, 8 a.m. to 10 a.m.

Closed on: August 12, 2002, 10 a.m. to adjournment (approximately 6 p.m.). August 13–15, 2002, 8 a.m. to adjournment (approximately 6 p.m.).

Name: National Research Service Awards.

Date and Time: August 26–29, 2002.

Place: Hilton Silver Spring, 8727 Colesville Road, Silver Spring, MD 20910.

Open on: August 26, 2002, 8 a.m. to 10 a.m.

Closed on: August 26, 2002, 10 a.m. to adjournment (approximately 6 p.m.). August 27–29, 2002, 8 a.m. to adjournment (approximately 6 p.m.).

Name: Area Health Education Centers Bioterrorism Supplement.

Date and Time: August 27–28, 2002.

Place: Parklawn Building, 5600 Fishers Lane, Rockville, MD 20857.

Open on: August 27, 2002, 10 a.m. to 12 p.m.

Closed on: August 27, 2002, 12 p.m. to adjournment (approximately 4 p.m.). August 28, 2002, 10 a.m. to adjournment (approximately 4 p.m.).

Name: Public Health Fellowships & Internships.

Date and Time: September 18–19, 2002.

Place: Parklawn Building, 5600 Fishers Lane, Rockville, MD 20857.

Open on: September 18, 2002, 12 p.m. to 1 p.m.

Closed on: September 18, 2002, 1 p.m. to adjournment (approximately 4 p.m.). September 19, 2002, 1 p.m. to adjournment (approximately 4 p.m.).

In **Federal Register** Document 02–5357 appearing on pages 10419–10420 in the issue for Thursday, March 7, 2002, the dates of the following meetings of the Health Professions and Nurse Education Special Emphasis Panel are corrected as follows:

Name: National Research Service Awards.

Date and Time: August 5–8, 2002.

Place: Hilton Silver Spring, 8727 Colesville Road, Silver Spring, MD 20910.

Open on: August 5, 2002, 8 a.m. to 10 a.m.

Closed on: August 5, 2002, 10 a.m. to adjournment (approximately 6 p.m.). August 6–8, 2002, 8 a.m. to adjournment (approximately 6 p.m.).

Name: Geriatric Academic Career Awards.

Date and Time: August 12, 2002.

Place: Hilton Silver Spring, 8727 Colesville Road, Silver Spring, MD 20910.

Open on: August 12, 2002, 8 a.m. to 10 a.m.

Closed on: August 12, 2002, 10 a.m. to adjournment (approximately 6 p.m.). August 13–15, 2002, 8 a.m. to adjournment (approximately 6 p.m.).

Purpose: The Health Professions and Nurse Education Special Emphasis Panel shall advise the Associate Administrator for Health Professions on the technical merit of grants to improve the training, distribution, utilization, and quality of personnel required to staff the Nation's health care delivery system.

Agenda: The open portion of each meeting will cover introductions, opening remarks, housekeeping details, and an orientation to the review process. The meetings will be closed after Orientation on the first day of each meeting until adjournment while the review of grant applications is conducted. The closing is in accordance with the provision set forth in section 552b(c)(6), Title 5 U.S.C., as amended, and the Determination by the Acting Associate Administrator for Management and Program Support, Health Resources and Services Administration, pursuant to section 10(d) of the Federal Advisory Committee Act, Public Law 92–463, as amended (5 U.S.C. Appendix 2).

For further information, contact Ms. Theresa Derville, Acting Director, Office of Peer Review, Bureau of Health Professions, Parklawn Building, Room 8C–23, 5600 Fishers Lane, Rockville, Maryland 20857, telephone 301–443–6339.

Dated: July 30, 2002.

Jane M. Harrison,

Director, Division of Policy Review and Coordination.

[FR Doc. 02–19630 Filed 8–1–02; 8:45 am]

BILLING CODE 4165–15–P

DEPARTMENT OF HOUSING AND URBAN DEVELOPMENT

[Docket No. FR–4730–N–31]

Federal Property Suitable as Facilities To Assist the Homeless

AGENCY: Office of the Assistant Secretary for Community Planning and Development, HUD.

ACTION: Notice.

SUMMARY: This Notice identifies unutilized, underutilized, excess, and surplus Federal property reviewed by HUD for suitability for possible use to assist the homeless.

EFFECTIVE DATE: August 2, 2002.

FOR FURTHER INFORMATION CONTACT: Mark Johnston, Department of Housing and Urban Development, Room 7262, 451 Seventh Street SW, Washington, DC 20410; telephone (202) 708–1234; TTY number for the hearing- and speech-impaired (202) 708–2565, (these

telephone numbers are not toll-free), or call the toll-free Title V information line at 1–800–927–7588.

SUPPLEMENTARY INFORMATION: In accordance with the December 12, 1988 court order in *National Coalition for the Homeless* v. *Veterans Administration,* No. 88–2503–OG (D.D.C.), HUD publishes a Notice, on a weekly basis, identifying unutilized, underutilized, excess and surplus Federal buildings and real property that HUD has reviewed for suitability for use to assist the homeless. Today's Notice is for the purpose of announcing that no additional properties have been determined suitable or unsuitable this week.

Dated: July 25, 2002.

John D. Garrity,

Director, Office of Special Needs Assistance Programs.

[FR Doc. 02–19248 Filed 8–1–02; 8:45 am]

BILLING CODE 4210–29–M

DEPARTMENT OF THE INTERIOR

Fish and Wildlife Service

Draft Environmental Impact Statement for the Swanson River Satellites Natural Gas Exploration and Development Project

AGENCY: U.S. Fish and Wildlife Service, Interior.

ACTION: Notice of Availability.

SUMMARY: This notice advises the public that the Draft Environmental Impact Statement (DEIS) for the Swanson River Satellites Natural Gas Exploration and Development Project is available for public review. During the 60-day review and comment period, there will be two public hearings on the DEIS as described below. The DEIS evaluates the potential environmental impacts of constructing natural gas exploration and production facilities. The proposed project would be located in the northwest portion of the Kenai National Wildlife Refuge, Kenai Peninsula, Alaska, in the vicinity of the existing Swanson River oil and gas field. The U.S. Fish and Wildlife Service (USFWS) is the lead Federal agency in the environmental review process. The Bureau of Land Management (BLM) and U.S. Army Corps of Engineers (USACE) are serving as cooperating agencies. This notice is being furnished as required by the National Environmental Policy Act (NEPA) Regulations (40 CFR 1503.1) to invite comments from other agencies and the public on the content of the DEIS.

DATES: The public hearing dates are:

1. September 5, 2002, 7 p.m. to 9 p.m., Soldotna, Alaska.
2. September 17, 2002, 2 p.m. to 4 p.m., Washington, DC.

Written comments must be received by October 1, 2002.

ADDRESSES: The public hearing locations are:

1. Soldotna, Alaska—Aspen Hotel, 326 Binkley Circle, Soldotna, AK
2. Washington, DC—U.S. Fish and Wildlife Service, 4401 North Fairfax Drive, Room 200B, Arlington, VA

Comments should be addressed to: Brian Anderson, U.S. Fish and Wildlife Service, Division of Natural Resources, Stop 221,1011 E. Tudor Road., Anchorage, AK 99503.

FOR FURTHER INFORMATION CONTACT: Brian Anderson (907) 786–3379.

SUPPLEMENTARY INFORMATION: Union Oil Company of California d.b.a. Unocal has applied for a right-of-way grant to construct facilities, including roads, pipelines, drill pads, and other facilities necessary for exploration and production of natural gas resources within the Kenai National Wildlife Refuge, a Conservation System Unit established by the Alaska National Interest Lands Conservation Act (ANILCA) (Sec. 303, Pub. L. 96–487, 16 U.S.C.668dd). The right-of-way application is being evaluated under regulations at 43 CFR part 36 implementing Title XI of ANILCA, ''Transportation and Utility Systems in and Across, and Access into, Conservation System Units in Alaska.''

The East Swanson River Satellite is approximately five miles east of the Swanson River Field (T8N, R8W, SM). The North Swanson River Satellite encompasses the Birch Hill Unit, and is located approximately three miles northeast of the northern Swanson River Field boundary (T9N, R9W, SM). Most of the surface estate within the project area is owned by the United States and is managed by the USFWS, although a portion of the surface estate involved has been conveyed to the Tyonek Native Corporation. The subsurface oil, gas, and coal mineral estate is owned by Cook Inlet Region Incorporated (CIRI), with the exception of the Birch Hill Unit, where these minerals are leased from the United States. Under Title XI, CIRI is entitled to adequate and feasible access to their valid inholdings for economic and other purposes, subject to reasonable regulations necessary to protect the natural and other values of the Refuge. Unocal has leased the natural gas development rights from CIRI and the United States.

Unocal proposes to develop natural gas exploration and production from up to two locations in the North Swanson River Satellite area, and up to two locations in the East Swanson River Satellite area. In addition to natural gas wells, a water well and drainage sump will be installed at each site. The satellite areas would be connected to the existing Swanson River Field infrastructure via a new 100-foot-wide road and pipeline corridor extending a total of approximately 12 miles. The corridor would accommodate a gravel road, primary and secondary products pipelines, a produced water disposal pipeline, and communications and electric power lines. Constructing the roads and pads would require approximately 278,600 cubic yards of gravel, which would be extracted from sources specified by the USFWS. A phased construction is proposed, beginning with roads and pads needed for natural gas exploration, and followed as necessary by installation of pipelines and other production facilities. In the event that exploration results do not warrant production, or at the conclusion of production activities, roads and pads would be restored according to a restoration plan approved by the USFWS.

Unocal has also applied for a Department of the Army permit under Section 404 of the Clean Water Act from the USACE, and notice of staking/permit to drill for existing Federal oil and gas leases from the BLM. Under Title XI of ANILCA, the USFWS, USACE, and BLM each has an independent decision regarding their authority over the proposed project, but that these decisions will be issued concurrently.

The DEIS evaluates the potential direct, indirect, and cumulative impacts of constructing the proposed project, and assesses reasonable alternatives that would protect the resources of the Refuge. The environmental review is being conducted in accordance with the requirements of NEPA (42 U.S.C. 4371 *et seq.*) as implemented by the Council on Environmental Quality regulations at 40 CFR 1500–1508, and the pertinent regulations of USFWS. Copies of the DEIS are available for public review at the following locations: Z.J. Loussac Public Library, Anchorage; Soldotna Public Library, Soldotna; and the Kenai Community Library, Kenai. The DEIS is also available online at *http://alaska.fws.gov/refuges.cfm.*

Dated: July 2, 2002.

David B. Allen,

Regional Director, Region 7, U.S. Fish and Wildlife Service.

[FR Doc. 02–19482 Filed 8–1–02; 8:45 am]

BILLING CODE 4310–55–P

DEPARTMENT OF THE INTERIOR

Fish and Wildlife Service

Notice of Intent To Conduct Restoration Planning for Natural Resources Injured by the Release of Oil From the T/V Command, San Francisco, CA

AGENCY: Fish and Wildlife Service, Interior.

ACTION: Notice of intent.

SUMMARY: The U.S. Department of the Interior, acting through the Fish and Wildlife Service, the U.S. Department of Commerce, acting through the National Oceanic and Atmospheric Administration, California Department of Fish and Game (CDFG), the California State Lands Commission (SLC), and the California Department of Parks and Recreation (DPR), are joint trustees (Trustees) for natural resources and are authorized to assess injuries to Federal and State resources caused by the T/V Command Oil Spill and to plan and implement restoration actions to address those injuries. The Trustees announce the intent to prepare a draft Restoration Plan (RP) and Environmental Assessment (EA) for the T/V Command Oil Spill. As an initial step, a scoping document has been prepared to guide development of the restoration plan. The Trustees have invited and encouraged agencies and the public to provide written comments on the scoping document through publication in newspapers, mailings, agency websites and other notices. In addition, a public meeting on the scoping document was held in May, 2002, and other opportunities for public comment are provided through public review and comment on documents contained in the Administrative Record, and on the Draft Restoration Plan when it has been prepared.

ADDRESSES: Written comments on all restoration planning documents should be sent to: Field Supervisor, Fish and Wildlife Service, Sacramento Fish and Wildlife Office, 2800 Cottage Way, Room W–2605, Sacramento, CA 95825 (facsimile 916/414–6713). Comments and materials received will be available for public inspection, by appointment, during normal business hours at the above address. All restoration planning documents will be available on the T/V Command website at *http://www.darcnw.noaa.gov/command.htm* and *http://www.dfg.ca.gov/Ospr/restorations.html.* Copies of Comments and reports will also be on file at the Gulf of the Farallones National Marine Sanctuary, Fort Mason, Building 201, San Francisco, CA 94123; (415) 561–6622. It is available for public inspection during normal business hours, by appointment, at that address.

FOR FURTHER INFORMATION CONTACT: For further information, or to be notified of future restoration planning activities contact Charlene Hall, Fish and Wildlife Service, Sacramento Fish and Wildlife Office (*see* **ADDRESSES** section) at (916) 414–6739 or visit the T/V Command website at *http://www.darcnw.noaa.gov/command.htm* and *http://www.dfg.ca.gov/Ospr/restorations.html.*

SUPPLEMENTARY INFORMATION:

Background

On September 26, 1998, the T/V Command (owned and operated by Anax International Agencies) left San Francisco Bay bound for Panama. As it traveled in the southbound traffic lane off San Francisco and San Mateo County coasts, it released an estimated 3,000 gallons of Intermediate Bunker Fuel (IBF) 380, also known as Fuel Oil No. 6. On September 30, oil began to wash ashore, largely in the form of scattered tarballs, over 15 miles of beaches, primarily in San Mateo County.

The primary impacts from the spill were: (1) Injuries to large numbers of seabirds; (2) Injuries to sandy beach and rocky intertidal shoreline habitats; and (3) Lost and diminished use of beaches for human recreation. The restoration effort is aimed at developing a strategy for restoring habitats, species, and natural resource services that are lost or impaired as a result of the spill. The draft RP/EA will describe the restoration alternatives considered and identify a preferred restoration alternative.

The Trustees reached a settlement with Pearl Shipping Corporation and Anax International Agencies, Inc. (responsible parties). The Settlement was embodied in a Consent Decree that was reviewed by a U.S. District Court and was subject to public comment prior to being formally entered by the Court on March 31, 2000. Pursuant to the Consent Decree, the responsible parties placed a total of $5,518,000 into an interest bearing account. Of the total civil settlement, $3,913,015.97 was deposited in the Natural Resources Damage Assessment and Restoration Fund created pursuant to 43 U.S.C. 1474b (NRDAR Fund) as natural resource damages.

The Trustees have committed to the expenditure of the NRDA money for the design, implementation, permitting (as necessary), monitoring and oversight of restoration projects, and for the costs of complying with the requirement of the law to conduct a restoration planning and implementation process. The Trustees share joint responsibilities regarding the injured seabirds, habitat, and human use losses and have entered into a Memorandum of Understanding (MOU) to coordinate restoration planning and oversight activities.

Trustees' Determinations

The Trustees have made the following determinations pursuant to 15 CFR 990.41 and 990.42:

(1) Beginning on or about September 26, 1998, an occurrence involving a vessel in the Southern Traffic Lane seaward of San Francisco Bay, California, within the territorial sea of the United States, resulted in the discharge of oil into and upon navigable waters and adjoining shorelines of San Francisco and San Mateo Counties, and other areas to be determined, within the State of California. This occurrence constituted an incident within the meaning of 15 CFR 990.30. The Incident is also a spill or discharge as defined at California Government Code 8670.3(aa).

(2) The Incident was not permitted under a permit issued under Federal, State, or Local law: was not from a public vessel; and was not from an offshore facility subject to the Trans-Alaska Pipeline Authority Act, 43 U.S.C. 1651 *et seq.*

(3) Oil discharged during the Incident affected marine habitats, wildlife, and human uses in the area. Consequently, natural resources under the trusteeship of the Trustees have been injured as a result of the incident.

(4) As a result of the foregoing determinations, the Trustees have jurisdiction to pursue restoration under the Federal Oil Pollution Act (OPA), 33 U.S.C. Sections 2701–2761, and California's Lampert-Keene-Seastrand Oil Spill Prevention and Response Act, Government Code Sections 8670.1 *et seq.*

Trustees' Determination To Conduct Restoration Activities

(1) Injuries resulted from the Incident. Data collected and analyzed pursuant to 15 CFR Section 990.43 demonstrate that injuries to natural resources are likely to have resulted from the incident, including, but not limited to the following:

(A) Seabirds: Oiled birds were collected during the response. One hundred seventy-seven live and dead birds were recovered from the beaches. In addition, other birds were believed injured based on modeling, although not directly recovered. Injured species were primarily common murres, California brown pelicans and marbled murrelets, along with various other seabird species. California brown pelicans and marbled murrelets are listed as threatened and/or endangered species under the Endangered Species Act (ESA) (16 U.S.C. Section 1533(c)), and the California Endangered Species Act (Fish & Game Code Sections 2050, *et seq.*).

(B) Sandy Beach and Rocky Intertidal Shoreline Habitats: The T/V Command oil spill affected over 15 miles of shoreline areas extending from Montara State Beach to Bean Hollow State Beach in San Mateo County, California.

(C) Lost Human Use: From September 30 to October 11, the Incident interrupted recreational services to individuals participating in beach-related activities in San Mateo County, California. These activities include, but are not limited to, walking, jogging, swimming, surfing, tidal viewing, and picnicking.

(2) Response actions have not adequately addressed the injuries resulting from the Incident. Although response actions were initiated promptly, the nature of the discharge and the sensitivity of the environment precluded prevention of injuries to some natural resources.

(3) Feasible primary and/or compensatory restoration actions exist to address the potential injuries. The Trustees will be considering restoration projects that are feasible to implement. Components of a restoration plan may include seabird enhancement, shoreline habitat enhancement, and compensation for lost human use.

Based on the above findings, the Trustees made the determination that they have jurisdiction to pursue restoration pursuant to the Oil Pollution Act, 33 U.S.C. Sections 2702 and 2706 (b)–(c).

Restoration Planning

The primary impacts from the spill were injuries to large numbers of seabirds, primarily common murres. In addition, a number of California brown pelicans and marbled murrelets were impacted along with various other seabirds species. California brown pelicans and marbled murrelets are listed as threatened and/or endangered species under the Endangered Species Act (ESA) (16 U.S.C. 1533(c)) and the California Endangered Species Act (Fish & Game Code 2050, *et seq.*). In addition, injuries occurred to sandy beach and rocky intertidal shoreline habitats and lost and diminished use of beaches for human recreation.

The Trustee Council has begun the public scoping process for restoration planning. The goal of scoping is to initiate a public process to determine the scope of issues under consideration. The Trustees have developed a public scoping document to involve the public in the development of a draft restoration plan and environmental assessment (RP/EA). All persons affected by, or otherwise interested in, the proposed restoration plan have been invited (through publication in newspapers, mailings, and other notice) to participate in determining the scope of significant issues to be considered in the draft RP/EA by submitting written comments on the scoping document. Through the scoping process, the Trustees will identify and prioritize alternatives for potential restoration actions.

The Trustees will develop a restoration plan and environmental assessment (RP/EA) to restore the resources injured from this spill. The RP/EA will set forth the details of specific project proposals to be developed by the Trustees. The final restoration plan will be prepared and implemented jointly by the Trustees, after providing public notice, opportunity for public input, and consideration of any public comment. In addition, certain projects may require the preparation of individual environmental impact statements or other additional compliance for NEPA or state NEPA-equivalent laws.

Administrative Record

The Trustees have opened an Administrative Record (Record) in compliance with 15 CFR Section 990.45. The Record will include documents relied upon by the Trustees during the assessment and restoration planning performed in connection with the Incident. The Record is on file at the Gulf of the Farallones National Marine Sanctuary, Fort Mason, Building 201, San Francisco, California 94123. Arrangements can be made to review the Record by calling (415) 561–6622. The Record can also be viewed on the T/V Command website at *http://www.darcnw.noaa.gov/command.htm* and *http://www.dfg.ca.gov/Ospr/restorations.html.*

Opportunity To Comment

Pursuant to 15 CFR 990.44, the Trustees seek public involvement in restoration planning through public review and comment on the public scoping document and documents contained in the Administrative Record, as well as on the Draft Restoration Plan when it has been prepared. To receive future public notices regarding restoration planning, and for review of restoration planning documents, contact Charlene Hall (*see* **ADDRESSES** section) or visit the T/V Command website at *http://www.darcnw.noaa.gov/command.htm* and *http://www.dfg.ca.gov/Ospr/restorations.html.* Requests must be in writing to be processed.

National Environmental Policy Act

The Fish and Wildlife Service and any other agencies that may receive funds from the Trustees must agree to obtain and comply with any applicable permits or authorizations from environmental regulatory agencies. In addition, recipients of funds must complete all environmental documentation and public review requirements under the National Environmental Policy Act (NEPA) and/or California Environmental Quality Act (CEQA).

Author

The primary authors of this notice are Kolleen Bannon (NOAA) and

James Haas (Service; *see* **ADDRESSES** section).

Authority

The authority for this action is the Oil Pollution Act of 1990 (33 U.S.C. 2701 *et seq.*).

Dated: July 26, 2002.

D. Kenneth McDermond,

Deputy Manager, California/Nevada Operations Office, Sacramento, California.

[FR Doc. 02–19483 Filed 8–1–02; 8:45 am]

BILLING CODE 4310–55–P

DEPARTMENT OF THE INTERIOR

Bureau of Indian Affairs

Submission of Information Collection to the Office of Management and Budget for Review Under the Paperwork Reduction Act

AGENCY: Bureau of Indian Affairs, Interior.

ACTION: Notice.

SUMMARY: This notice announces the Information Collection Request for the Johnson-O'Malley Program Annual Report Form has been submitted to the Office of Management and Budget for approval and renewal under provision

of the Paperwork Reduction Act. You may submit comments on this information collection. An agency may not conduct or sponsor, and a person is not required to respond to a collection of information unless it displays a currently valid OMB control number. The OMB control number for this collection is 1076–0096.

DATES: Please submit your comments and suggestions on or before September 3, 2002.

ADDRESSES: Send comments or suggestions directly to the Office of Management and Budget, Office of Regulatory Affairs, Attention: Desk Officer for the Department of the Interior, 725 17th Street, NW., Washington, DC 20503.

Send a copy of your comments to Garry R. Martin, Bureau of Indian Affairs, Office of Indian Education Programs, 1849 C Street, NW., MS 3512–MIB, Washington, DC 20240–0001. Telephone number 202–208–3478.

SUPPLEMENTARY INFORMATION:

I. Abstract

The information collection is necessary to assess the need for Johnson-O'Malley programs in accordance with 25 CFR Part 273, Subpart D, Section 273.50 Annual Reporting. A 60-day request for public comments on this information collection was published in the **Federal Register** on Monday, March 18, 2002 (67 FR 12043). No comments were received. Copies of the collection of information may be obtained by contacting the Bureau's clearance officer at 202–208–2574.

II. Request for Comments

Comments are invited on: (a) Whether the collection of information is necessary for the proper performance of the functions of the agency, including whether the information will have practical utility; (b) the accuracy of the agency's estimate of the burden (hours and cost) of the collection of information, including the validity of the methodology and assumptions used; (c) ways to enhance the quality, utility and clarity of the information to be collected; and (d) ways to minimize the burden of the collection of the information on the respondents, including through the use of automated collection techniques or other forms of information technology.

The Office of Management and Budget (OMB) has up to 60 days to approve or disapprove the information collection but may respond after 30 days; therefore, comments submitted in response to this notice should be submitted to OMB within 30 days in order to assure their maximum consideration.

All comments received are subject to public inspection. If you wish to have your name and address withheld from the public, you must state this prominently at the beginning of your comment. The requested information to be withheld will be honored to the extent of the law.

III. Data

Title: Johnson-O'Malley Program Annual Report Form.

OMB approval number: 1076–0096.

Frequency: Annually.

Description of respondents: Tribal, Tribal Organizations, School District education program administrators.

Estimated completion time: 5 hours.

Annual responses: 360.

Annual Burden hours: 1,800 hours.

Dated: May 24, 2002.

Neal A. McCaleb,

Assistant Secretary—Indian Affairs.

[FR Doc. 02–19471 Filed 8–1–02; 8:45 am]

BILLING CODE 4310–6W–P

DEPARTMENT OF THE INTERIOR

Bureau of Land Management

[AK–962–1410–HY–P; F–14880–A; NAA–5]

Alaska Native Claims Selection

AGENCY: Bureau of Land Management, DOI.

ACTION: Notice of decision approving lands for conveyance.

SUMMARY: As required by 43 CFR 2650.7(d), notice is hereby given that an appealable decision approving lands for conveyance pursuant to the Alaska Native Claims Settlement Act will be issued to Kikiktagruk Inupiat Corporation, for lands within Secs. 11, 12 and 14, T. 17 N., R. 18 W., Kateel River Meridian, located in the vicinity of Kotzebue, Alaska, containing approximately 130 acres. Notice of this decision will also be published four times in the *Anchorage Daily News.*

DATES: The time limits for filing an appeal are:

1. Any party claiming a property interest which is adversely affected by the decision, shall have until September 3, 2002 to file an appeal.

2. Parties receiving service by certified mail shall have until 30 days from the receipt to file an appeal.

Parties who do not file an appeal in accordance with the requirements of 43 CFR part 4, subpart E, shall be deemed to have waived their rights.

ADDRESSES: Copies of the decision may be obtained from: Bureau of Land Management, Alaska State Office, 222 West Seventh Avenue, # 13, Anchorage, Alaska 99513–7599.

FOR FURTHER INFORMATION CONTACT: Chris Sitbon, Land Law Examiner, (907) 271–3226.

Chris Sitbon,

Land Law Examiner, Branch of ANCSA Adjudication.

[FR Doc. 02–19580 Filed 8–1–02; 8:45 am]

BILLING CODE 4310–$$–P

DEPARTMENT OF THE INTERIOR

Bureau of Land Management

[AK–962–1410–HY–P; AA–14015, SEA–6]

Alaska Native Claims Selection

AGENCY: Bureau of Land Management, DOI

ACTION: Notice of decision approving lands for conveyance.

SUMMARY: As required by 43 CFR 2650.7(d), notice is hereby given that an appealable decision approving lands for conveyance pursuant to the Alaska Native Claims Settlement Act will be issued to Sealaska Corporation for lands on Catherine Island, located in T. 51 S., R. 66 E., Copper River Meridian, Alaska. Notice of this decision will also be published four times in the *Juneau Empire*.

DATES: The time limits for filing an appeal are:

1. Any party claiming a property interest which is adversely affected by the decision shall have until September 3, 2002 to file an appeal.

2. Parties receiving service of the decision by certified mail shall have 30 days from the date of receipt to file an appeal.

Parties who do not file an appeal in accordance with the requirements of 43 CFR part 4, subpart E, shall be deemed to have waived their rights.

ADDRESSES: A copy of the decision may be obtained from: Bureau of Land Management, Alaska State Office, 222 West Seventh Avenue, #13, Anchorage, Alaska 99513–7599.

FOR FURTHER INFORMATION CONTACT: Sherri Belenski, (907) 271–3333.

Sherri D. Belenski,

Land Law Examiner, Branch of ANCSA Adjudication.

[FR Doc. 02–19581 Filed 8–1–02; 8:45 am]

BILLING CODE 4310–$$–P

DEPARTMENT OF THE INTERIOR

Bureau of Land Management

[CA–610–01–1610–DQ]

Notice of Availability of the Northern and Eastern Colorado Desert Proposed Plan, an Amendment to the California Desert Conservation Area Plan, and the Final Environmental Impact Statement

AGENCY: Department of Interior, Bureau of Land Management, California Desert District.

ACTION: Notice of Availability of the Northern and Eastern Colorado Desert Proposed Plan (NECO), an amendment to the Bureau of Land Management (BLM) California Desert Conservation Area (CDCA) Plan, and associated Final Environmental Impact Statement (FEIS).

SUMMARY: NECO amends the CDCA Plan for a 5.5 million acre area in the southeastern part of the CDCA and provides for conservation of desert ecosystems for federal lands in the planning area on a landscape basis—for BLM lands, Joshua Tree National Park, and the Chocolate Mountains Aerial Gunnery Range, managed by the U.S. Marine Corps Yuma Air Station. NECO includes goals, objectives, management prescriptions, and monitoring in accordance with the Federal Land Policy and Management Act (FLPMA) of 1976 for comprehensive management of desert ecosystems, including the recovery of two species listed under the federal Endangered Species Act: the desert tortoise and Coachella Valley milkvetch. The FEIS evaluates the Proposed Plan Amendments and three alternatives. The FEIS also includes public comments on the DEIS and BLM's responses to those comments.

DATES: Written protests on the FEIS will be accepted if received by September 3, 2002, by the Environmental Protection Agency. Instructions for filing protests are contained in the NECO document Cover Sheet just inside the front cover, and are included below under **SUPPLEMENTARY INFORMATION.**

ADDRESSES: Copies of the document are being mailed to those who received the DEIS or provided comments on the DEIS. The document is available for review on line at *http://www.ca.blm.gov/cdd/landuseplanning.html* and is also available in hard copy or CDrom at the following addresses and telephone numbers:

BLM, 6221 Box Springs Blvd, Riverside, CA 92507; (909) 697–5200
BLM, 2601 Barstow Road, Barstow, CA 92311; (760) 252–6000
BLM, 300 So. Richmond Rd, Ridgecrest, CA 93555; (760) 384–5400
BLM, 690 W. Garnet, North Palm Springs, CA 92258; (760) 251–4800
BLM, 1661 So. 4th St., El Centro, CA 92243; (760) 337–4400
BLM, 101 W. Spikes Rd, Needles, CA 92363; (760) 326–7000

FOR FURTHER INFORMATION CONTACT: Richard E. Crowe, BLM, 6221 Box Springs Blvd, Riverside, CA 92507; (909) 697–5216.

Background Information: The Environmental Protection Agency published the Notice of Availability of the NECO DEIS in the **Federal Register** on February 23, 2001. The public review period on the DEIS began February 26, 2001 and ended November 1, 2001.

SUPPLEMENTARY INFORMATION: Following are the instructions from the *43 Code of Federal Regulations 1610.5–2* for filing protests:

(a) Any person who participates in the planning process and has an interest which is or may be adversely affected by the approval or amendment of a resource management plan may protest such approval or amendment. A protest may raise only those issues which were submitted for the record during the planning process.

(1) The protest shall be in writing and shall be filed with the Director. The protest shall be filed within 30 days of the date the Environmental Protection Agency published the notice of receipt of the final environmental impact statement containing the plan or amendment in the **Federal Register**. For an amendment not requiring the preparation of an environmental impact statement, the protest shall be filed within 30 days of the publication of the notice of its effective date.

(2) The protest shall contain:

(i) The name, mailing address, telephone number and interest of the person filing the protest;

(ii) A statement of the issue or issues being protested;

(iii) A statement of the part or parts of the plan or amendment being protested;

(iv) A copy of all documents addressing the issue or issues that were submitted during the planning process by the protesting party or an indication of the date the issue or issues were discussed for the record; and

(v) A concise statement explaining why the State Director's decision is believe to be wrong.

(3) The Director shall promptly render a decision on the protest. The decision shall be in writing and shall set forth the reasons for the decision. The decision shall be sent to the protesting party by certified mail, return receipt requested.

(b) The decision of the Director shall be the final decision for the Department of the Interior.

Mailing address for filing a protest:

Regular mail—U.S. Department of the Interior, Director, Bureau of Land Management (210), Attn: Brenda Williams, P.O. Box 66538, Washington, DC 20240.

Overnight mail—U.S. Department of the Interior, Director, Bureau of Land Management (210), Attn: Brenda Williams, Telephone (202) 452–5045, 1620 ''L'' Street, NW., Rm 1075, Washington, DC 20036.

Alan Stein,

Acting District Manager.

[FR Doc. 02–19303 Filed 8–1–02; 8:45 am]

BILLING CODE 4310–40–P

DEPARTMENT OF THE INTERIOR

Bureau of Land Management

[CO–930–1430–ET; COC–046748]

Public Land Order No. 7527; Revocation of Public Land Order No. 2632; Colorado

AGENCY: Bureau of Land Management, Interior.

ACTION: Public land order.

SUMMARY: This order revokes a public land order in its entirety as to the remaining 10,119.14 acres of public lands withdrawn for the Savory-Pot Hook Reclamation Project. The lands are no longer needed for reclamation purposes. This action will open the lands to surface entry and mining. The lands have been and will remain open to mineral leasing.

EFFECTIVE DATE: September 3, 2002.

FOR FURTHER INFORMATION CONTACT: Doris E. Chelius, BLM Colorado State Office, 2850 Youngfield Street, Lakewood, Colorado 80215–7093, 303–239–3706.

SUPPLEMENTARY INFORMATION: By virtue of the authority vested in the Secretary of the Interior by Section 204 of the Federal Land Policy and Management Act of 1976, 43 U.S.C. 1714 (1994), it is ordered as follows:

1. Public Land Order No. 2632, which withdrew public lands for the Bureau of Reclamation Savory-Pot Hook Project, is hereby revoked in its entirety insofar as it affects the remaining lands within the following Townships:

Sixth Principal Meridian
Tps. 11 and 12 N., R. 89 W.,
T. 12 N., R. 90 W.,
Tps. 11 and 12 N., R. 91 W.,
T. 11 N., R. 92 W.,
T. 12 N., R. 93 W.,
T. 12 N., R. 94 W.,
T. 6 N., R. 99 W.

The areas described aggregate 10,119.14 acres in Moffat County.

More specific legal descriptions showing sections and subdivisions may be obtained by contacting the address or

phone number listed above. The documents may also be examined by the public during regular working hours at the Bureau of Land Management Colorado State Office.

2. At 9 a.m. on September 3, 2002, the lands described in paragraph 1 will be opened to the operation of the public land laws generally, subject to valid existing rights, the provisions of existing withdrawals, other segregations of record, and the requirements of applicable law. All valid applications received at or prior to 9 a.m. on September 3, 2002, shall be considered as simultaneously filed at that time. Those received thereafter shall be considered in the order of filing.

3. At 9 a.m. on September 3, 2002, the lands described in paragraph 1 will be opened to location and entry under the United States mining laws, subject to valid existing rights, the provisions of existing withdrawals, other segregations of record, and the requirements of applicable law. Appropriation of any of the lands described in this order under the general mining laws prior to the date and time of restoration is unauthorized. Any such attempted appropriation, including attempted adverse possession under 30 U.S.C. 38 (1994), shall vest no rights against the United States. Acts required to establish a location and to initiate a right of possession are governed by State law where not in conflict with Federal law. The Bureau of Land Management will not intervene in disputes between rival locators over possessory rights since Congress has provided for such determinations in local courts.

Dated: July 2, 2002.

Rebecca W. Watson,

Assistant Secretary—Land and Minerals Management.

[FR Doc. 02–19579 Filed 8–1–02; 8:45 am]

BILLING CODE 4310–JB–P

DEPARTMENT OF THE INTERIOR

Bureau of Land Management

[CO–2002–1430–EU]

COC 65896; Notice of Realty Action

AGENCY: Bureau of Land Management, Interior.

ACTION: Notice of Realty Action, Direct sale of public land in San Juan County, Colorado.

SUMMARY: The following lands have been found suitable for sale under section 203 of the Federal Land Policy and Management Act of 1976 (90 Stat. 2750, 43 U.S.C. 1713) at not less than the appraised fair market value. The single parcel is described as: Public land within the NE¼ of Section 31, T.42 N., R.7 W., New Mexico Principal Meridian, identified as Tract 73, and containing 3.88 acres, more or less.

These lands are classified for disposal pursuant to section 7 of the Taylor Grazing Act and were identified for disposal in a land use plan which was in effect on September 5, 1985. The lands are hereby segregated from appropriation under the public land laws, including the mining laws, pending disposition of this action or 270 days from the date of publication of this notice, whichever occurs first.

Publication of this notice will initiate public review, consultation, and collaboration for this proposed sale. Copies of the notice will be provided to the Congressional delegation, the Governor, local government officials, and other interested parties for review and comment. Preliminary consultation with local governmental officials and other adjacent landowners indicates that there will be no opposition to the proposed sale.

The parcel is difficult and uneconomic to manage as part of the public lands and is not suitable for management by another Federal department or agency. The sale is consistent with the San Juan/San Miguel Resource Management Plan, and no significant resource values will be affected by this transfer. Disposal of this small parcel to resolve an inadvertent occupancy trespass outweighs retaining the land in federal ownership. The public interest, therefore, will be well served by offering this parcel for direct sale.

The parcel is being offered only to Daren Hillery, fee owner of the adjoining property (Munzer Claim, MS 18619). The subject parcel contains a cabin that is owned by Mr. Hillery. Use of the direct sale procedures authored under 43 CFR 2711.3–3, will resolve an inadvertent occupancy trespass situation. The mineral estate will be reserved to the United States. Payment of purchase price will be deposited in the Federal Land Disposal Account authorized under Section 206 of the Federal Land Transaction Facilitation Act of 2000 (Public Law 106–248).

Terms, conditions, and reservations applicable to the sale are as follows:

1. The public land will be conveyed for not less than fair market value.

2. All mineral deposits in the land, and the right to prospect for, mine and remove such deposits from the same under applicable law and regulations shall be reserved to the United States.

3. A right-of-way for ditches and canals constructed by the authority of the United States under the Act of August 30, 1890 (43 U.S.C. 945) shall be reserved to the United States.

4. The conveyance shall be subject to an existing 25-foot wide right-of-way grant for a power distribution line.

The lands will not be offered for sale until at least 60 days after this notice is published in the **Federal Register**. This notice is also being published in a newspaper of general circulation in the vicinity of the public lands being proposed for sale.

DATES: Interested parties may submit comments to the Columbine Field Office Manager within 45 days of publication of this notice. Please reference the applicable serial number in all correspondence. Objections will be reviewed and this realty action may be sustained, vacated, or modified.

Unless vacated or modified, this realty action will become the final determination of the Department of the Interior.

Address for Comments: Bureau of Land Management, Columbine Field Office Manager, 15 Burnett Court, Durango, Colorado 81301.

FOR FURTHER INFORMATION CONTACT: Charlie Higby, BLM Realty Specialist, (970) 385–1374; San Juan Public Land Center, 15 Burnett Court, Durango, Colorado 81301.

Mark Stiles,

Center Manager, San Juan Public Lands Center.

[FR Doc. 02–19578 Filed 8–1–02; 8:45 am]

BILLING CODE 4310–JB–P

DEPARTMENT OF THE INTERIOR

Bureau of Land Management

[AK–921–1410–BK–P]

Alaska; Notice for Publication; Filing of Plat of Survey; Alaska

The plat of survey of the following described land was officially filed in the Alaska State Office, Anchorage, Alaska, on the date indicated.

A plat representing the dependent resurvey of U.S. Survey No. 465, Alaska, Tract B, and the survey of partition lines for accreted land in front of U.S. Survey No. 465, Tract B, situated approximately 75 miles northwesterly from Kodiak, Alaska, was accepted November 30, 2001, and was officially filed March 20, 2002.

This plat was prepared at the request of the National Park Service to delineate the surrounding public lands.

This plat will immediately become the basic record for describing the land for all authorized purposes. This survey

has been placed in the open files in the Alaska State Office and is available to the public as a matter of information.

All inquires relating to these lands should be sent to the Alaska State Office, Bureau of Land Management, 222 West Seventh Avenue, #13, Anchorage, Alaska 99513–7599; 907–267–1403.

Michael D. Wilson,

Acting Chief, Branch of Field Surveys.

[FR Doc. 02–19577 Filed 8–1–02; 8:45 am]

BILLING CODE 1410–BK–P

INTERNATIONAL TRADE COMMISSION

[Investigation No. 731–TA–744 (Review)]

Brake Rotors from China

Determination

On the basis of the record [1] developed in the subject five-year review, the United States International Trade Commission determines, pursuant to section 751(c) of the Tariff Act of 1930 (19 U.S.C. 1675(c)), that revocation of the antidumping duty order on brake rotors from China would be likely to lead to continuation or recurrence of material injury to an industry in the United States within a reasonably foreseeable time.

Background

The Commission instituted this review on March 1, 2002 (67 FR 9462) and determined on June 4, 2002 that it would conduct an expedited review (67 FR 40964, June 14, 2002).

The Commission transmitted its determination in this review to the Secretary of Commerce on July 29, 2002. The views of the Commission are contained in USITC Publication 3528 (July 2002), entitled Brake Rotors From China: Investigation No. 731–TA–744 (Review).

By order of the Commission.

Issued: July 30, 2002.

Marilyn R. Abbott,

Secretary to the Commission.

[FR Doc. 02–19586 Filed 8–1–02; 8:45 am]

BILLING CODE 7020–02–P

[1] The record is defined in sec. 207.2(f) of the Commission's Rules of Practice and Procedure (19 CFR 207.2(f)).

INTERNATIONAL TRADE COMMISSION

[Investigation No. 731–TA–752 Review]

Crawfish Tail Meat From China

AGENCY: United States International Trade Commission.

ACTION: Institution of a five-year review concerning the antidumping duty order on crawfish tail meat from China.

SUMMARY: The Commission hereby gives notice that it has instituted a review pursuant to section 751(c) of the Tariff Act of 1930 (19 U.S.C. 1675(c)) (the Act) to determine whether revocation of the antidumping duty order on crawfish tail meat from China would be likely to lead to continuation or recurrence of material injury. Pursuant to section 751(c)(2) of the Act, interested parties are requested to respond to this notice by submitting the information specified below to the Commission;[1] to be assured of consideration, the deadline for responses is September 20, 2002. Comments on the adequacy of responses may be filed with the Commission by October 15, 2002. For further information concerning the conduct of this review and rules of general application, consult the Commission's rules of practice and procedure, part 201, subparts A through E (19 CFR part 201), and part 207, subparts A, D, E, and F (19 CFR part 207).

EFFECTIVE DATE: August 1, 2002.

FOR FURTHER INFORMATION CONTACT: Mary Messer (202–205–3193), Office of Investigations, U.S. International Trade Commission, 500 E Street SW., Washington, DC 20436. Hearing-impaired persons can obtain information on this matter by contacting the Commission's TDD terminal on 202–205–1810. Persons with mobility impairments who will need special assistance in gaining access to the Commission should contact the Office of the Secretary at 202–205–2000. General information concerning the Commission may also be obtained by accessing its Internet server (*http://www.usitc.gov*).

The public record for this investigation may be viewed on the Commission's electronic docket (EDIS-ON-LINE) at *http://dockets.usitc.gov/eol/public.*

SUPPLEMENTARY INFORMATION:

Background

On September 15, 1997, the Department of Commerce issued an antidumping duty order on imports of crawfish tail meat from China (62 FR 48218). The Commission is conducting a review to determine whether revocation of the order would be likely to lead to continuation or recurrence of material injury to the domestic industry within a reasonably foreseeable time. It will assess the adequacy of interested party responses to this notice of institution to determine whether to conduct a full review or an expedited review. The Commission's determination in any expedited review will be based on the facts available, which may include information provided in response to this notice.

Definitions.—The following definitions apply to this review:

(1) Subject Merchandise is the class or kind of merchandise that is within the scope of the five-year review, as defined by the Department of Commerce.

(2) The Subject Country in this review is China.

(3) The Domestic Like Product is the domestically produced product or products which are like, or in the absence of like, most similar in characteristics and uses with, the Subject Merchandise. In its original determination, the Commission defined the Domestic Like Product as crawfish tail meat, whether peeled or ''shell-on.''

(4) The Domestic Industry is the U.S. producers as a whole of the Domestic Like Product, or those producers whose collective output of the Domestic Like Product constitutes a major proportion of the total domestic production of the product. In its original determination, the Commission defined the Domestic Industry as tail meat processors.

(5) The Order Date is the date that the antidumping duty order under review became effective. In this review, the Order Date is September 15, 1997.

(6) An Importer is any person or firm engaged, either directly or through a parent company or subsidiary, in importing the Subject Merchandise into the United States from a foreign manufacturer or through its selling agent.

Participation in the Review and Public Service List

Persons, including industrial users of the Subject Merchandise and, if the merchandise is sold at the retail level, representative consumer organizations,

[1] No response to this request for information is required if a currently valid Office of Management and Budget (OMB) number is not displayed; the OMB number is 3117–0016/USITC No. 02–5–072, expiration date June 30, 2005. Public reporting burden for the request is estimated to average 7 hours per response. Please send comments regarding the accuracy of this burden estimate to the Office of Investigations, U.S. International Trade Commission, 500 E Street, SW., Washington, DC 20436.

wishing to participate in the review as parties must file an entry of appearance with the Secretary to the Commission, as provided in section 201.11(b)(4) of the Commission's rules, no later than 21 days after publication of this notice in the **Federal Register**. The Secretary will maintain a public service list containing the names and addresses of all persons, or their representatives, who are parties to the review.

Former Commission employees who are seeking to appear in Commission five-year reviews are reminded that they are required, pursuant to 19 CFR 201.15, to seek Commission approval if the matter in which they are seeking to appear was pending in any manner or form during their Commission employment. The Commission's designated agency ethics official has advised that a five-year review is the ''same particular matter'' as the underlying original investigation for purposes of 19 CFR 201.15 and 18 U.S.C. 207, the post employment statute for Federal employees. Former employees may seek informal advice from Commission ethics officials with respect to this and the related issue of whether the employee's participation was ''personal and substantial.'' However, any informal consultation will not relieve former employees of the obligation to seek approval to appear from the Commission under its rule 201.15. For ethics advice, contact Carol McCue Verratti, Deputy Agency Ethics Official, at 202–205–3088.

Limited Disclosure of Business Proprietary Information (BPI) Under an Administrative Protective Order (APO) and APO Service List.

Pursuant to section 207.7(a) of the Commission's rules, the Secretary will make BPI submitted in this review available to authorized applicants under the APO issued in the review, provided that the application is made no later than 21 days after publication of this notice in the **Federal Register**. Authorized applicants must represent interested parties, as defined in 19 U.S.C. 1677(9), who are parties to the review. A separate service list will be maintained by the Secretary for those parties authorized to receive BPI under the APO.

Certification

Pursuant to section 207.3 of the Commission's rules, any person submitting information to the Commission in connection with this review must certify that the information is accurate and complete to the best of the submitter's knowledge. In making the certification, the submitter will be deemed to consent, unless otherwise specified, for the Commission, its employees, and contract personnel to use the information provided in any other reviews or investigations of the same or comparable products which the Commission conducts under Title VII of the Act, or in internal audits and investigations relating to the programs and operations of the Commission pursuant to 5 U.S.C. Appendix 3.

Written Submissions

Pursuant to section 207.61 of the Commission's rules, each interested party response to this notice must provide the information specified below. The deadline for filing such responses is September 20, 2002. Pursuant to section 207.62(b) of the Commission's rules, eligible parties (as specified in Commission rule 207.62(b)(1)) may also file comments concerning the adequacy of responses to the notice of institution and whether the Commission should conduct an expedited or full review. The deadline for filing such comments is October 15, 2002. All written submissions must conform with the provisions of sections 201.8 and 207.3 of the Commission's rules and any submissions that contain BPI must also conform with the requirements of sections 201.6 and 207.7 of the Commission's rules. The Commission's rules do not authorize filing of submissions with the Secretary by facsimile or electronic means. Also, in accordance with sections 201.16(c) and 207.3 of the Commission's rules, each document filed by a party to the review must be served on all other parties to the review (as identified by either the public or APO service list as appropriate), and a certificate of service must accompany the document (if you are not a party to the review you do not need to serve your response).

Inability To Provide Requested Information

Pursuant to section 207.61(c) of the Commission's rules, any interested party that cannot furnish the information requested by this notice in the requested form and manner shall notify the Commission at the earliest possible time, provide a full explanation of why it cannot provide the requested information, and indicate alternative forms in which it can provide equivalent information. If an interested party does not provide this notification (or the Commission finds the explanation provided in the notification inadequate) and fails to provide a complete response to this notice, the Commission may take an adverse inference against the party pursuant to section 776(b) of the Act in making its determination in the review.

Information To Be Provided in Response to This Notice of Institution: As used below, the term ''firm'' includes any related firms.

(1) The name and address of your firm or entity (including World Wide Web address if available) and name, telephone number, fax number, and E-mail address of the certifying official.

(2) A statement indicating whether your firm/entity is a U.S. producer of the Domestic Like Product, a U.S. union or worker group, a U.S. importer of the Subject Merchandise, a foreign producer or exporter of the Subject Merchandise, a U.S. or foreign trade or business association, or another interested party (including an explanation). If you are a union/worker group or trade/business association, identify the firms in which your workers are employed or which are members of your association.

(3) A statement indicating whether your firm/entity is willing to participate in this review by providing information requested by the Commission.

(4) A statement of the likely effects of the revocation of the antidumping duty order on the Domestic Industry in general and/or your firm/entity specifically. In your response, please discuss the various factors specified in section 752(a) of the Act (19 U.S.C. 1675a(a)) including the likely volume of subject imports, likely price effects of subject imports, and likely impact of imports of Subject Merchandise on the Domestic Industry.

(5) A list of all known and currently operating U.S. producers of the Domestic Like Product. Identify any known related parties and the nature of the relationship as defined in section 771(4)(B) of the Act (19 U.S.C. 1677(4)(B)).

(6) A list of all known and currently operating U.S. importers of the Subject Merchandise and producers of the Subject Merchandise in the Subject Country that currently export or have exported Subject Merchandise to the United States or other countries since 1996.

(7) If you are a U.S. producer of the Domestic Like Product, provide the following information on your firm's operations on that product during calendar year 2001 (report quantity data in pounds and value data in U.S. dollars, f.o.b. plant). If you are a union/worker group or trade/business association, provide the information, on an aggregate basis, for the firms in which your workers are employed/which are members of your association.

(a) Production (quantity) and, if known, an estimate of the percentage of

total U.S. production of the Domestic Like Product accounted for by your firm's(s') production;

(b) the quantity and value of U.S. commercial shipments of the Domestic Like Product produced in your U.S. plant(s); and

(c) the quantity and value of U.S. internal consumption/company transfers of the Domestic Like Product produced in your U.S. plant(s).

(8) If you are a U.S. importer or a trade/business association of U.S. importers of the Subject Merchandise from the Subject Country, provide the following information on your firm's(s') operations on that product during calendar year 2001 (report quantity data in pounds and value data in U.S. dollars). If you are a trade/business association, provide the information, on an aggregate basis, for the firms which are members of your association.

(a) The quantity and value (landed, duty-paid but not including antidumping or countervailing duties) of U.S. imports and, if known, an estimate of the percentage of total U.S. imports of Subject Merchandise from the Subject Country accounted for by your firm's(s') imports;

(b) the quantity and value (f.o.b. U.S. port, including antidumping and/or countervailing duties) of U.S. commercial shipments of Subject Merchandise imported from the Subject Country; and

(c) the quantity and value (f.o.b. U.S. port, including antidumping and/or countervailing duties) of U.S. internal consumption/company transfers of Subject Merchandise imported from the Subject Country.

(9) If you are a producer, an exporter, or a trade/business association of producers or exporters of the Subject Merchandise in the Subject Country, provide the following information on your firm's(s') operations on that product during calendar year 2001 (report quantity data in pounds and value data in U.S. dollars, landed and duty-paid at the U.S. port but not including antidumping or countervailing duties). If you are a trade/business association, provide the information, on an aggregate basis, for the firms which are members of your association.

(a) Production (quantity) and, if known, an estimate of the percentage of total production of Subject Merchandise in the Subject Country accounted for by your firm's(s') production; and

(b) the quantity and value of your firm's(s') exports to the United States of Subject Merchandise and, if known, an estimate of the percentage of total exports to the United States of Subject Merchandise from the Subject Country accounted for by your firm's(s') exports.

(10) Identify significant changes, if any, in the supply and demand conditions or business cycle for the Domestic Like Product that have occurred in the United States or in the market for the Subject Merchandise in the Subject Country since the Order Date, and significant changes, if any, that are likely to occur within a reasonably foreseeable time. Supply conditions to consider include technology; production methods; development efforts; ability to increase production (including the shift of production facilities used for other products and the use, cost, or availability of major inputs into production); and factors related to the ability to shift supply among different national markets (including barriers to importation in foreign markets or changes in market demand abroad). Demand conditions to consider include end uses and applications; the existence and availability of substitute products; and the level of competition among the Domestic Like Product produced in the United States, Subject Merchandise produced in the Subject Country, and such merchandise from other countries.

(11) (OPTIONAL) A statement of whether you agree with the above definitions of the Domestic Like Product and Domestic Industry; if you disagree with either or both of these definitions, please explain why and provide alternative definitions.

Authority: This review is being conducted under authority of title VII of the Tariff Act of 1930; this notice is published pursuant to section 207.61 of the Commission's rules.

Issued: July 25, 2002.

By order of the Commission.

Marilyn R. Abbott,

Secretary to the Commission.

[FR Doc. 02–19544 Filed 8–1–02; 8:45 am]

BILLING CODE 7020–02–P

DEPARTMENT OF JUSTICE

Drug Enforcement Administration

[Docket No. 00–4]

Gregory D. Owens, D.D.S.; Grant of Restricted Registration

On October 1, 1999, the Deputy Assistant Administrator, Office of Diversion Control, Drug Enforcement Administration (DEA), issued an Order to Show Cause to Gregory D. Owens, D.D.S. (Respondent), seeking to revoke his DEA Certificate of Registration as a practitioner and deny any pending applications for renewal of such registration pursuant to 21 U.S.C. 823(f) for reason that his continued registration is inconsistent with the public interest, as defined by 21 U.S.C. 823(f) and 824(a)(4). The Respondent timely filed a request for a hearing on the allegations raised by the Order to Show Cause, and the requested hearing was held before Judge Gail A. Randall in Abingdon, Virginia, on October 4, 2000. At the hearing, each party called one witness to testify and the Government introduced documentary evidence. The Respondent offered no documentary evidence at the hearing. After the hearing, both parties submitted Proposed Findings of Fact, Conclusions of Law and Argument. On May 4, 2001, Judge Randall issued her Recommended Rulings, Findings of Fact, Conclusions of Law, and Decision of the Administrative Law Judge, recommending that Respondent's registration be continued subject to certain restrictions.

On May 24, 2001, the Government filed Exceptions to Judge Randall's decision, and thereafter Judge Randall transmitted the record of these proceedings to the Deputy Administrator for final decision on June 4, 2001.

The Deputy Administrator has considered the record in its entirety, and pursuant to 21 CFR 1316.67, hereby issues his final order based upon findings of fact and conclusions of law as hereinafter set forth. The Deputy Administrator adopts in full the recommended rulings, findings of fact, conclusions of law, and decision of the Administrative Law Judge. His adoption is in no way diminished by any recitation of facts, issues, or conclusions herein, or of any failure to mention a matter of fact or law.

On October 20, 1981, the Respondent received a DEA Certificate of Registration, number AO1188881, with a registration location of Knoxville, Tennessee. The registration was renewed annually until it expired on December 31, 1985. The last renewal of that registration number was given for a location in Kingsport, Tennessee.

In 1981, the Respondent received a license to practice dentistry in the state of Virginia. Sometime in 1986, the Respondent moved from Tennessee to Virginia. The Respondent has maintained his license to practice dentistry in the Commonwealth of Virginia since the time he first received it, through the time of this hearing.

Before July 1, 1996, licensed health care professionals in Virginia needed a separate Controlled Substance Registration from the Virginia Board of

Pharmacy. After July 1, 1996, a valid Virginia license to practice dentistry also conferred upon the license state authorization to handle controlled substances without a separate certificate from the Board of Pharmacy.

On August 29, 1987, the Respondent received a Controlled Substances Registration Certificate, number 0204–030208, from the Virginia Board of Pharmacy. The Respondent maintained the registration until its expiration on December 31, 1992.

On November 5, 1996, the Virginia Board of Dentistry, Department of Health Professions, conducted an unannounced inspection of the Respondent's practice. The Board of Dentistry found that the Respondent had hired an unlicensed hygienist, that the Respondent failed to keep records for two patients, and that he did not keep records for any prescriptions written on the weekends for any patient.

The Government alleged in the Order to Show Cause, and the Respondent agreed, that the Respondent issued prescriptions without a valid state license to handle controlled substances and with an expired DEA Certificate of Registration.

The Respondent testified that he did not realize that his DEA Certificate of Registration had expired until the Board of Dentistry inspected his office. The Respondent testified that he now understands that he must maintain a DEA registration if he wants to prescribe controlled substances.

On or about December 16, 1996, the DEA received an application from the Respondent for a controlled substances registration. The Respondent testified that he sent in the application after discussing his expired registration with the DEA on the telephone. The Respondent testified that he did not remember who told him that the DEA registration had expired. That application was granted, for on February 4, 1997, the DEA issued to the Respondent the DEA Certificate of Registration number BO5201366, and renewed it on October 25, 1999. An additional pending application for renewal is at issued in this proceeding.

Between the time that the DEA received the Respondent's 1996 application and the time that the DEA issued the certificate of registration at issue, the Respondent continued to prescribe controlled substances. A DEA Diversion Investigator (DI) testified that, on March 3, 1997, he received a tip from a Special Agent (SA) of the Virginia State Police that the Respondent may have prescribed controlled substances without authorization from either the DEA or the Commonwealth of Virginia. Consequently, the DI and SA began an investigation of area pharmacies.

The DI discovered that the Respondent used his expired DEA number, AO1188881, to prescribe controlled substances from January 1990 to January 1997. In addition, from December 31, 1992 to July 1, 1996, the Respondent lacked state authorization when he wrote prescriptions for controlled substances. The DI also testified that he found no evidence of diversion to the illicit market by the Respondent of any controlled substances. Furthermore, he testified that there was no indication by the regulatory agencies of Virginia, or by the DEA, that the Respondent had intentionally refused to renew a license or registration.

The DI testified that the Respondent called in a prescription to East Gate Drugstore for Darvocet on or about January 3, 1997, and again on or about January 15, 1997.

The Respondent credibly testified that he did not know, prior to this hearing, that Darvocet was a controlled substance, and further, at the hearing he stated that he did not understand what 'Schedule IV' meant.

While the Respondent awaited action on his December 16, 1996 application, he pleaded guilty to a misdemeanor in the U.S. District Court for the Western District of Virginia for failure to file income tax returns from 1990–94. Upon the Respondent's plea entered on January 30, 1997, the District Court sentenced him with a fine of $10,000 plus cost of $125 and five months in the Virginia Community Correctional Center, where the Respondent was allowed daily work release.

The Respondent testified that he was wrong not to file his taxes. He explained that he believed that he was not legally obligated to pay federal income taxes, and that he had so written to the IRS. The IRS chose not to pursue the matter at the time. The Respondent testified that he now understands that he is obligated to pay taxes, having learned ''the hard way.''

On June 30, 1997, the Respondent pleaded guilty to a second misdemeanor in the Western District of Virginia, this time for failure to report his change of address to the DEA. The District Court sentenced the Respondent to two years of probation, a $5,000 fine and $25 in costs.

On November 24, 1997, the Board of Dentistry for the Commonwealth of Virginia (Board) issued an Order, placing the Respondent on indefinite probation and imposing various terms and conditions on his continued dental license. For example, the Respondent was ordered to attend fifteen hours of continuing education for the renewal of his license, with a specific course on OSHA. The Respondent must provide the Board with certificates of his attendance within six months of the date that the Order became final. The Order also required the Respondent to provide a copy of his ''current DEA registration/certificate'' within two weeks of that same date of finality. The Respondent credibly testified that he had completed these requirements, and the Government presented no evidence to the contrary. Significantly, the Board's Order did not limit the Respondent's authority to handle controlled substances, despite a finding that the Respondent prescribed controlled substances at a time when he did not have authority from either Virginia or the DEA to do so. The Respondent consented to one annual unannounced inspection of his patent records by the Board, and he further consented to the Board's observing the on-site treatment of his patients. Also, the Board required that the Respondent's conduct be commensurate with Virginia's statutes that regulate dentistry, specifically Virginia Code sections 54.1–2700–2729, and Virginia's Drug Control Act, Virginia Code sections 54.1–3400–3472.

The DEA last renewed the Respondent's registration, number BO5201366, on October 1, 1999. That registration expired on December 31, 1999. On November 17, 1999, the DEA received the Respondent's renewal application, which was dated November 8, 1999. The address on the Certificate of Registration is current.

On March 30, 2000, the DI approved the Respondent's renewal application and sent it to DEA Headquarters.

Pursuant to 21 U.S.C. 823(f), and subdelegations of authority thereunder found at 28 CFR 0.100(b) and 0.104, the Deputy Administrator may deny an application for registration as a practitioner, if he determines that the issuance of such a registration would be inconsistent with the public interest. Section 823(f) requires that the following factors be considered in evaluating the public interest:

(1) The recommendation of the appropriate State licensing board or professional disciplinary authority;

(2) The applicant's experience in dispensing, or conducting research with respect to controlled substances;

(3) The applicant's conviction record under Federal or State laws relating to the manufacture, distribution, or dispensing of controlled substances;

(4) Compliance with applicable State, Federal, or local laws relating to controlled substances;

(5) Such other conduct which may threaten the public health or safety.

These factors are to be considered in the disjunctive. The Deputy Administrator may properly rely on any one or any combination of these factors, and may give each factor the weight he deems appropriate in determining whether an application for registration should be denied. *See Henry J. Schwarz, M.D.,* 54 FR 16,422 (1989). As an initial matter, the Government bears the burden of proving that registration of the Respondent is not in the public interest. *See Shatz* v. *United States Dep't of Justice,* 873 F.2d 1089, 1091 (8th Cir. 1989).

Regarding factor one, the recommendation of the State licensing board, Judge Randall found the Virginia Board of Dentistry has not made any official recommendation regarding this proceeding's outcome. The record shows that Respondent's dental license is currently on indefinite probation, under the conditions imposed by the Board's Order.

Judge Randall found it significant that the Board's Order did not limit Respondent's authority to handle controlled substances, despite a finding that Respondent prescribed controlled substances during a period when he was not authorized to do so by either the State of Virginia nor by DEA. The parties did not dispute that Respondent currently has state authority to handle controlled substances.

The Deputy Administrator concurs with Judge Randall's noting that a review of the Respondent's terms of probation serves to shed light on what the Board believed was necessary to protect the public interest. The following terms are relevant: the Respondent must attend fifteen hours of continuing education for the renewal of his license, with a specific course on OSHA, and must provide the Board with certificates of his attendance; the Respondent must submit to the Board quarterly reports of his current address and current employment, if any; the Respondent must consent to one annual unannounced inspection of his patient records by the Board; the Respondent must also consent to the Board's observation of the on-site treatment of his patients, if requested; and finally, the Board required Respondent to comply with Virginia's statues that regulate dentistry, specifically Virginia Code Sections 54.1–2700–2729, and Virginia's Drug Control Act, Virginia Code Sections 54.1–3400–3472.

The Deputy Administrator concurs with Judge Randall's conclusion that the Board's placement of Respondent's license on probation reflects favorably upon Respondent's retaining his DEA Certificate of Registration, and upon DEA's granting Respondent's pending renewal application. Instead of suspending or limiting Respondent's authority to handle controlled substances, the Board simply chose to heighten monitoring of Respondent's practice. The Deputy Administrator concurs with Judge Randall's conclusion that such action by the Board demonstrates that the Board does not believe Respondent poses a danger to the public health or safety, to the extent that he cannot be trusted with the serious responsibilities of practicing dentistry and handling controlled substances.

Regarding factors two and four, experience in dispensing controlled substances, and compliance with laws related to controlled substances, the Deputy Administrator concurs with Judge Randall's finding that the record shows Respondent clearly has demonstrated a lack of attention to maintaining the necessary state licenses and federal registration to handle controlled substances. While maintaining his license to practice dentistry in Virginia since 1981, Respondent allowed his state license to handle controlled substances lapse in December 1992. The record further shows Respondent continued to prescribe controlled substances without a valid DEA registration number from January 1990 to January 1997, and without state authority from January 1993 to July 1996. The Government correctly asserts that the Respondent's conduct was proscribed by 21 U.S.C. 822(b), 841(a)(1), and 843(a)(2), as well as 21 CFR 1306.03.

The Deputy Administrator concurs with Judge Randall's finding that Respondent's admitted ignorance of his responsibilities as a practitioner are extremely troubling. Not only did Respondent forget to renew his state license and DEA registration over the years, but he also continued to prescribe controlled substances without the authority granted by these licenses. Judge Randall noted that Respondent prescribed Darvocet for a patient in January 1997, while his initial application for the DEA registration at issue was pending. Respondent testified at the hearing that he did not know Darvocet was a controlled substance or in what schedule it was. In fact, Respondent testified he did not know what the term ''Schedule IV'' meant.

The Deputy Administrator concurs with Judge Randall's conclusion that Respondent's past failures to pay attention to his state license to handle controlled substances and his DEA registration provide ample evidence for the revocation of his DEA Certificate of Registration and the denial of any pending applications for renewal.

The Deputy Administrator also concurs, however, with Judge Randall's findings that Respondent credibly testified that he has been made acutely aware of his licensing obligations since the Board's involvement in his practice since 1997, and also the significance of the Board's decision to continue Respondent's state authorization to handle controlled substances, with conditions, as discussed pursuant to factor one, above.

Regarding factor three, convictions under Federal or State laws relating to controlled substances, the Deputy Administrator finds the record contains no evidence that Respondent has been convicted of a crime related to his handling of controlled substances. Respondent does have a federal misdemeanor conviction for his failure to report his change of address to the DEA.

Regarding factor five, other conduct which may threaten the public health or safety, Judge Randall found the Government's reliance on Respondent's conduct prior to the 1999 DEA renewal of Respondent's registration as a basis for denial was inappropriate. The Deputy Administrator concurs with Judge Randall's conclusion that since the Government knew about this conduct before it renewed Respondent's registration in 1999, it would be inconsistent to now allow the Government to use this information as a basis to revoke Respondent's registration and deny his application for renewal, especially since there is no information in the record of any additional or subsequent misconduct that would warrant a change in DEA's position. The Deputy Administrator has considered and rejected the Government's Exceptions to this finding.

The Deputy Administrator further concurs with Judge Randall's findings that the record demonstrates that Respondent has learned from his past mistakes and has demonstrated sufficient willingness to accept responsibility, as shown by his 1997 guilty pleas to the charges of federal income tax evasion and failure to notify DEA of his change of address. The Deputy Administrator has considered and rejected the Government's

exceptions to Judge Randall's findings in this regard.

Further evidence relevant to this factor was received by the Deputy Administrator subsequent to the transmittal of the record for his final decision. Judge Randall's Recommended Decision included a requirement that, within one year of the final order, Respondent attend a course in the handling and identification of controlled substances, and provide proof to DEA of his completion of the course. Apparently acting upon his own initiative following receipt of Judge Randall's Recommended Decision, Respondent wrote a letter to the attention of Judge Randall wherein he stated that he was unable to find a course concerning controlled substances, but instead had attended ''three minor and two major dental meetings'' and in a four page attachment had apparently taken the Virginia Board of Dentistry Statutes and Regulations and had apparently handwritten in outline format ''all pertinent laws'' relating to controlled substances. By letter dated January 25, 2002, Judge Randall transmitted this submission to the Office of the Deputy Administrator, noting also that she ''informed both parties that I am forwarding this letter to you for consideration with the record.'' While this submission's primary relevance lies in tending to show Respondent's apparent desire to rehabilitate himself, more concrete evidence was soon forthcoming.

By letter dated March 27, 2002, Respondent submitted documentation to the Office of the Deputy Administrator evidencing his attendance of the 70th Annual Nation's Capitol Dental Meeting, held February 28 through March 2, 2002, and sponsored by the District of Columbia Dental Society. Respondent's submission included a Continuing Education Verification Form indicating his attendance at *inter alia* two Registered Clinics entitled Pharmacology and Therapeutics I and II. The course outline, also submitted, indicated the clinics focused on the proper handling of controlled substances in a dental setting. The Verification Form states that, at the end of each clinical program listed thereon, a verification code will be announced. Respondent's Verification Form listed such a code beside each of the above-mentioned clinics. The Form further stated the verification codes could be checked by contacting the District of Columbia Dental Society. This was done, and Respondent's codes were verified as being correct, indicating his attendance at the clinics.

By letter dated June 18, 2002, the Office of the Deputy Administrator transmitted copies of the two above-referenced submissions to the attention of counsel for the Government in this matter, and granted until close of business June 21, 2002, to provide any response deemed necessary. By letter dated June 21, 2002, the Government objected to the consideration of the submissions as an unauthorized attempt to re-open the record, and further objected on the purported grounds that the Government would be prejudiced by lack of an opportunity to cross-examine the Respondent and introduce rebuttal evidence. The Deputy Administrator hereby rejects the Government's objections for the following reasons. First, the Deputy Administrator finds that this evidence is cumulative, in that it merely reinforces the same conclusion he would have reached in the absence of this evidence. Second, of the two submissions, the March 27, 2002, submission of Respondent's attendance at the Registered Clinics at the 70th Annual Nation's Capitol Dental Meeting carries far more probative weight, for the very reason the Government seeks to object to its consideration—Respondent's attendance at the clinics is objectively verifiable by checking the verification codes. The codes were verified as correct, indicating Respondent's attendance at the clinics. It is hard to conceive what cross examination and rebuttal evidence could accomplish to change that fact.

Therefore, the Deputy Administrator has considered these two submissions, and finds they constitute evidence that Respondent is sincere in his desire to comply with the obligations of a DEA registrant, and that they contribute to the Deputy Administrator's finding that Respondent would not pose a threat to the public health or safety if allowed to maintain a DEA Registration.

The Deputy Administrator concurs with Judge Randall's finding that the Government has met its burden of proof for revocation of the Respondent's Certificate of Registration and denial of the pending renewal application. The Deputy Administrator notes, however, that he must consider all of the facts and circumstances of a particular case when deciding the appropriate remedy. *See Martha Hernandez, M.D.,* 62 FR 61,145, 61,147 (1997). The Deputy Administrator must also consider the Respondent's acceptance of responsibility for past offenses and rehabilitation efforts when deciding the likelihood that the Respondent's future conduct with respect to his DEA registration will be consistent with the public interest as defined by 21 U.S.C. 823(f). *See e.g., Michael Alan Patterson, M.D.,* 65 FR 5,682 (2000).

In the instant case, the Deputy Administrator concurs with Judge Randall's conclusion that the Respondent should be allowed the opportunity to demonstrate that he can now handle the responsibilities of a DEA registrant. The Deputy Administrator further concurs with Judge Randall's determination that the public interest would best be served by monitoring the Respondent's handling of controlled substances during this registration period. Therefore, like Judge Randall, the Deputy Administrator concludes that granting the Respondent a registration, with restrictions, ''will allow the Respondent to demonstrate that he can responsibly handle controlled substances in his [dental] practice, yet simultaneously protect the public by providing a mechanism for rapid detection of any improper activity related to controlled substances.'' *Michael J. Septer, D.O.,* 61 FR 53,762, 53,765 (1996) (*citing Steven M. Gardner, M.D.,* 51 FR 12,576 (1986)).

Therefore, the Respondent's application shall be granted, pursuant to the following restrictions and conditions:

(1) During the duration of the newly renewed registration, the Respondent must provide the local DEA office with a log of activities on a quarterly basis that shall state: (1) The date that a controlled substance prescription was written, or such substance was administered; (2) the name of the patient for whom the prescription was written, or to whom the substance was administered; (3) the patient's complaint; (4) the name, dosage, and quantity of the substance prescribed, dispensed, or administered; and (5) the date that the medication was last prescribed, dispensed, or administered to that patient, as well as the amount last provided to that patient. If no controlled substances are prescribed, administered, or dispensed during a given quarter, the Respondent shall indicate that fact in writing, in lieu of submission of the log.

(2) Within 30 days of the event, the Respondent must inform the local DEA office of any action taken by any state upon his medical license or upon his authorization to handle controlled substances within that state.

(3) Should the Respondent change employment during this registration period, he shall immediately notify the local DEA office that is monitoring his log of activities.

Accordingly, the Deputy Administrator of the Drug Enforcement Administration, pursuant to the

authority vested in him by 21 U.S.C. 823 and 824 and 28 CFR 0.100(b) and 0.104, hereby orders that the application for renewal of his registration submitted by Gregory D. Owens, D.D.S., be, and it hereby is, granted subject to the above described restrictions. This order is effective upon the issuance of the DEA Certificate of Registration, but no later than September 3, 2002.

Dated: July 24, 2002.

John B. Brown, III,

Deputy Administrator.

[FR Doc. 02–19530 Filed 8–01–02; 8:45 am]

BILLING CODE 4410–09–M

DEPARTMENT OF JUSTICE

Immigration and Naturalization Service

Agency Information Collection Activities: Proposed Collection; Comment Request

ACTION: 30-day notice of information collection under review: Interagency alien witness and informant record; Form I/854.

The Department of Justice, Immigration and Naturalization Service (INS) has submitted the following information collection request to the Office of Management and Budget (OMB) for review and clearance in accordance with the Paperwork Reduction Act of 1995. The information collection was previously published in the **Federal Register** on April 12, 2002 at 67 FR 18039, allowing for a 60-day public comment period. No public comment was received on this information collection.

The purpose of this notice is to allow an additional 30 days for public comments. Comments are encouraged and will be accepted until September 3, 2002. This process is conducted in accordance with 5 CFR 1320.10.

Written comments and/or suggestions regarding the items contained in this notice, especially regarding the estimated public burden and associated response time, should be directed to the Office of Management and Budget, Office of Information and Regulatory Affairs, Attention: Department of Justice Desk Officer, 725 17th Street, NW., Room 10235, Washington, DC 20530.

Written comments and suggestions from the public and affected agencies concerning the proposed collection of information should address one or more of the following four points:

(1) Evaluate whether the proposed collection of information is necessary for the proper performance of the functions of the agency, including whether the information will have practical utility;

(2) Evaluate the accuracy of the agency's estimate of the burden of the proposed collection of information, including the validity of the methodology and assumptions used;

(3) Enhance the quality, utility, and clarity of the information to be collected; and

(4) Minimize the burden of the collection of information on those who are to respond, including through the use of appropriate automated, electronic, mechanical, or other technological collection techniques or other forms of information technology, *e.g.,* permitting electronic submission of responses.

Overview of this information collection:

(1) *Type of Information Collection:* Extension of a currently approved information collection.

(2) *Type of the Form/Collection:* Interagency Alien Witness and Informant Record.

(3) *Agency form number, if any, and the applicable component of the Department of Justice sponsoring the collection:* Form I–854, Adjudications Division, Immigration and Naturalization Service.

(4) *Affected public who will be asked or required to respond, as well as a brief abstract:* Primary: Individuals or Households. The information collection is used by law enforcement agencies to bring alien witnesses and informants to the United States in ''S'' nonimmigrant classification.

(5) *An estimate of the total number of respondents and the amount of time estimated for an average respondent to respond:* 125 responses at 4.25 per response.

(6) *An estimate of the total public burden (in hours) associated with the collection:* 531 annual burden hours.

If you have additional comments, suggestions, or need a copy of the proposed information collection instrument with instructions, or additional information, please contact Richard A. Sloan 202–514–3291, Director, Regulations and Forms Services Division, Immigration and Naturalization Service, U.S. Department of Justice, 425 I Street, NW., Room 4034, Washington, DC 20536. Additionally, comments and/or suggestions regarding the item(s) contained in this notice, especially regarding the estimated public burden and associated response time may also be directed to Mr. Richard A. Sloan.

If additional information is required contact: Mr. Robert B. Briggs, Clearance Officer, United States Department of Justice, Information Management and Security Staff, Justice Management Division, Patrick Henry Building, 601 D Street, NW., Ste. 1600, Washington, DC 20530.

Dated: July 26, 2002.

Richard A. Sloan,

Department Clearance Officer, United States Department of Justice, Immigration and Naturalization Service.

[FR Doc. 02–19473 Filed 8–01–02; 8:45 am]

BILLING CODE 4410–10–M

DEPARTMENT OF JUSTICE

Immigration and Naturalization Service

Agency Information Collection Activities: Proposed Collection; Comment Request

ACTION: 30-Day Notice of Information Collection Under Review: Nonimmigrant Petition Based on Blanket L Petition; Form I–129S.

The Department of Justice, Immigration and Naturalization Service (INS) has submitted the following information collection request to the Office of Management and Budget (OMB) for review and clearance in accordance with the Paperwork Reduction Act of 1995. The information collection was previously published in the **Federal Register** on April 12, 2002 at 67 FR 18038, allowing for a 60-day public comment period. No public comment was received on this information collection.

The purpose of this notice is to allow an additional 30 days for public comments. Comments are encouraged and will be accepted until September 3, 2002.

Written comments and/or suggestions regarding the items contained in this notice, especially regarding the estimated public burden and associated response time, should be directed to the Office of Management and Budget, Office of Information and Regulatory Affairs, Attention: Department of Justice Desk Officer, 725–17th Street, NW., Room 10235, Washington, DC 20530.

Written comments and suggestions from public and affected agencies concerning the proposed collection of information should address one or more of the following four points:

(1) Evaluate whether the proposed collection of information is necessary for the proper performance of the functions of the agency, including whether the information will have practical utility;

(2) Evaluate the accuracy of the agency's estimate of the burden of the

proposed collection of information, including the validity of the methodology and assumptions used;

(3) Enhance the quality, utility, and clarity of the information to be collected; and

(4) Minimize the burden of the collection of information on those who are to respond, including through the use of appropriate automated, electronic, mechanical or other technological collection techniques of other forms of information technology, *e.g.*, permitting electronic submission of responses.

Overview of this information collection:

(1) *Type of Information Collection:* Extension of a currently approved information collection.

(2) *Title of the Form/Collection:* Nonimmigrant Petition Based on Blanket L Petition.

(3) *Agency form number, if any, and the applicable component of the Department of Justice sponsoring the collection:* Form I–29S, Immigration Services Division, Immigration and Naturalization Service.

(4) *Affected public who will be asked or required to respond, as well as a brief abstract:* Primary: Individuals or Households. This form is used by an employer to classify employees as L–1 nonimmigrant intracompany transferees under a blanket L petition approval. The INS will use the data on this for to determine eligibility for the requested immigration benefit.

(5) *An estimate of the total number of respondents and the amount of time estimated for an average respondent to respond:* 250,000 responses at 35 minutes (.583) per response.

(6) *An estimate of the total public burden (in hours) associated with the collection:* 145,750 annual burden hours.

If you have additional comments, suggestions, or need a copy of the proposed information collection instrument with instructions, or additional information, please contact Richard A. Sloan 202–514–3291, Director, Regulations and Forms Services Division, Immigration and Naturalization Service, U.S. Department of Justice, 425 I Street, NW., Room 4034, Washington, DC 20536. Additionally, comments and/or suggestions regarding the item(s) contained in this notice, especially regarding the estimated public burden and associated response time may also be directed to Mr. Richard A. Sloan.

If additional information is required contact: Mr. Robert B. Briggs, Clearance Officer, United States Department of Justice, Information Management and Security Staff, Justice Management Division, Patrick Henry Building, 601 D Street, NW., Ste. 1600, Washington, DC 20530.

Dated: July 26, 2002.

Richard A. Sloan,

Department Clearance Officer, United States Department of Justice, Immigration and Naturalization Service.

[FR Doc. 02–19474 Filed 8–1–02; 8:45 am]

BILLING CODE 4410–10–M

DEPARTMENT OF JUSTICE

Immigration and Naturalization Service

Agency Information Collection Activities: Proposed Collection; Comment Request

ACTION: 30-Day Notice of Information Collection Under Review: Application for Nonresident Alien's Mexican Border Crossing Card; Form I–190.

The Department of Justice, Immigration and Naturalization Service (INS) has submitted the following information collection request to the Office of Management and Budget (OMB) for review and clearance in accordance with the Paperwork Reduction Act of 1995. The information collection was previously published in the **Federal Register** on April 12, 2002 at 67 FR 18037, allowing for a 60-day public comment period. No public comment was received on this information collection.

The purpose of this notice is to allow an additional 30 days for public comments. Comments are encouraged and will be accepted until September 3, 2002. This process is conducted in accordance with 5 CFR 1320.10.

Written comment and/or suggestions regarding the items contained in this notice, especially regarding the estimated public burden and associated response time, should be directed to the Office of Management and Budget, Office of Information and Regulatory Affairs, Attention: Department of Justice Desk Officer, 725–17th Street, NW., Room 10235, Washington, DC 20530.

Written comments and suggestions from the public and affected agencies concerning the proposed collection of information should address one or more of the following four points:

(1) Evaluate whether the proposed collection of information is necessary for the proper performance of the functions of the agency, including whether the information will have practical utility;

(2) Evaluate the accuracy of the agency's estimate of the burden of the proposed collection of information, including the validity of the methodology and assumptions used;

(3) Enhance the quality, utility, and clarity of the information to be collected; and

(4) Minimize the burden of the collection of information on those who are to respond, including through the use of appropriate automated, electronic, mechanical, or other technological collection techniques or other forms of information technology, *e.g.*, permitting electronic submission of responses.

Overview of this information collection:

(1) *Type of Information Collection:* Extension of a currently approved information collection.

(2) *Title of the Form/Collection:* Application for Nonresident Alien's Mexican Border Crossing Card.

(3) *Agency form number, if any, and the applicable component of the Department of Justice sponsoring the collection:* Form I–190, Inspections Division, Immigration and Naturalization Service.

(4) *Affected public who will be asked or required to respond, as well as a brief abstract:* Primary: Individuals or Households. Individuals or households. This form will be used to obtain data from an applicant for replacement lost, stolen, or mutilated Mexican Border Crossing Card.

(5) *An estimate of the total number of respondents and the amount of time estimated for an average respondent to respond:* 270,410 responses at 5 minutes (.083) per response.

(6) *An estimate of the total public burden (in hours) associated with the collection:* 22,444 annual burden hours.

If you have additional comments, suggestions, or need a copy of the proposed information collection instrument with instructions, or additional information, please contact Richard A. Sloan 202–514–3291, Director, Regulations and Forms Services Division, Immigration and Naturalization Service, U.S. Department of Justice, 425 I Street, NW., Room 4034, Washington, DC 20536. Additionally, comments and/or suggestions regarding the item(s) contained in this notice, especially regarding the estimated public burden and associated response time may also be directed to Mr. Richard A. Sloan.

If additional information is required contact: Mr. Robert B. Briggs, Clearance Officer, United States Department of Justice, Information Management and Security Staff, Justice Management Division, Patrick Henry Building, 601 D

Street, NW., Ste. 1600, Washington, DC 20530.

Dated: July 26, 2002.

Richard A. Sloan,

Department Clearance Officer, United States Department of Justice, Immigration and Naturalization Service.

[FR Doc. 02–19475 Filed 8–1–02; 8:45 am]

BILLING CODE 4410–10–M

DEPARTMENT OF JUSTICE

Immigration and Naturalization Service

Agency Information Collection Activities: Proposed Collection; Comment Request

ACTION: 30-Day notice of information collection under review: Certificate for health care benefits.

The Department of Justice, Immigration and Naturalization Service (INS) has submitted the following information collection request to the Office of Management and Budget (OMB) for review and clearance in accordance with the Paperwork Reduction Act of 1995. The information collection was previously published in the **Federal Register** on April 5, 2002 at 67 FR 16438, allowing or a 60-day public comment period. No public comment was received on this information collection.

The purpose of this notice is to allow an additional 30 days for public comments. Comments are encouraged and will be accepted until September 3, 2002. This process is conducted in accordance with 5 CFR 1320.10.

Written comments and/or suggestions regarding the items contained in this notice, especially regarding the estimated public burden and associated response time, should be directed to the Office of Management and Budget, Office of Information and Regulatory Affairs, Attention: Department of Justice Desk Officer, 725—17th Street, NW., Room 10235, Washington, DC 20530.

Written comments and suggestions from the public and affected agencies concerning the proposed collection of information should address one or more of the following four points:

(1) Evaluate whether the proposed collection of information is necessary for the proper performance of the functions of the agency, including whether the information will have practical utility;

(2) Evaluate the accuracy of the agency's estimate of the burden of the proposed collection of information, including the validity of the methodology and assumptions used;

(3) Enhance the quality, utility, and clarity of the information to be collected; and

(4) Minimize the burden of the collection of information on those who are to respond, including through the use of appropriate automated, electronic, mechanical, or other technological collection techniques or other forms of information technology, *e.g.,* permitting electronic submission of responses.

Overview of this information collection:

(1) *Type of Information Collection:* Revision of a currently approved information collection.

(2) *Title of the Form/Collection:* Certificate of Health Care Benefits.

(3) *Agency form number, if any, and the applicable component of the Department of Justice sponsoring the collection:* No Agency Form Number (File No. OMB–15), Adjudications Division, Immigration and Naturalization Service.

(4) *Affected public who will be asked or required to respond, as well as a brief abstract:* Primary: Not-for-profit institutions. The data collected in this process is used by the credentialing organization to determine if the alien is eligible to receive a certificate. The Certificate is then submitted to the INS by an alien in order to obtain an immigration benefit.

(5) *An estimate of the total number of respondents and the amount of time estimated for an average respondent to respond:* 7,000 respondents at 2 hours per response and 14,000 applicant responses at 1.66 hours per response.

(6) *An estimate of the total public burden (in hours) associated with the collection:* 37,240 annual burden hours.

If you have additional comments, suggestions, or need a copy of the proposed information collection instrument with instructions, or additional information, please contact Richard A. Sloan 202–514–3291, Director, Regulations and Forms Services Division, Immigration and Naturalization Service, U.S. Department of Justice, 425 I Street, NW., Room 4034, Washington, DC 20536. Additionally, comments and/or suggestions regarding the item(s) contained in this notice, especially regarding he estimated pubic burden and associated response time may also be directed to Mr. Richard A. Sloan.

If additional information is required contact: Mr. Robert B. Briggs, Clearance Office, United States Department of Justice, Information Management and Security Staff, Justice Management Division, Patrick Henry Building, 601 D Street, NW., Ste. 1600, Washington, DC 20530.

Dated: July 26, 2002.

Richard A. Sloan,

Department Clearance Officer, United States Department of Justice, Immigration and Naturalization Service.

[FR Doc. 02–19476 Filed 8–1–02; 8:45 am]

BILLING CODE 4410–10–M

DEPARTMENT OF JUSTICE

Immigration and Naturalization Service

Agency Information Collection Activities: Proposed Collection; Comment Request

ACTION: 30-Day Notice of Information Collection Under Review: Arrival and Department Record; Form I–94.

The Department of Justice, Immigration and Naturalization Service (INS) has submitted the following information collection request to the Office of Management and Budget (OMB) for review and clearance in accordance with the Paperwork Reduction Act of 1995. The information collection was previously published in the **Federal Register** on April 12, 2002 at 67 FR 18038, allowing for a 60-day public comment period. Comments were received and have been reconciled in the Supporting Statement.

The purpose of this notice is to allow an additional 30 days for public comments. Comments are encouraged and will be accepted until September 3, 2002. This process is conducted in accordance with 5 CFR 1320.10.

Written comments and/or suggestions regarding the items contained in this notice, especially regarding the estimated public burden and associated response time, should be directed to the Office of Management and Budget, Office of Information and Regulatory Affairs, Attention: Department of Justice Desk Officer, 725–17th Street, NW., Room 10235, Washington, DC 20530.

Written comments and suggestions from the public and affected agencies concerning the proposed collection of information should address one or more of the following four points:

(1) Evaluate whether the proposed collection of information is necessary for the proper performance of the functions of the agency, including whether the information will have practical utility;

(2) Evaluate the accuracy of the agency's estimate of the burden of the proposed collection of information, including the validity of the methodology and assumption used;

(3) Enhance the quality, utility, and clarity of the information to be collected; and

(4) Minimize the burden of the collection of information on those who are to respond, including through the use of appropriate automated, electronic, mechanical, or other technological collection techniques or other forms of information technology, *e.g.,* permitting electronic submission of responses.

Overview of this information collection:

(1) *Type of Information Collection:* Extension of a currently approved information collection.

(2) *Title of the Form/Collection:* Arrival and Departure Record.

(3) *Agency form number, if any, and the applicable component of the Department of Justice sponsoring the collection:* Form I–94, Inspections Divisions, Immigration and Naturalization Service.

(4) *Affected public who will be asked or required to respond, as well as a brief abstract:* Primary: Individuals or Households. Documentation of alien arrival and departure to and from the United States is a part of the manifest requirements of Sections 231 and 235 of the Immigration and Nationality Act (INA) and may be evidence of registration when issued as provided by Section 264 of the INA.

(5) *An estimate of the total number of respondents and the amount of time estimated for an average respondent to respond:* 13,924,380 responses at 4 minutes (.066) per response.

(6) *An estimate of the total public burden (in hours) associated with the collection:* 919,009 annual burden hours.

If you have additional comments, suggestions, or need a copy of the proposed information collection instrument with instructions, or additional information, please contact Richard A. Sloan 202–514–3291, Director, Regulations and Forms Services Division, Immigration and Naturalization Service, U.S. Department of Justice, 425 I Street, NW., Room 4034, Washington, DC 20536. Additional, comments and/or suggestions regarding the item(s) contained in this notice, especially regarding the estimated public burden and associated response time may also be directed to Mr. Richard A. Sloan.

If additional information is required contact: Mr. Robert B. Briggs, Clearance Officer, United States Department of Justice, Information Management and Security Staff, Justice Management Division, Patrick Henry Building, 601 D Street, NW., Ste. 1600, Washington, DC 20530.

Dated: July 26, 2002.

Richard A. Sloan,

Department Clearance Officer, United States Department of Justice, Immigration and Naturalization Service.

[FR Doc. 02–19477 Filed 8–1–02; 8:45 am]

BILLING CODE 4410–10–M

DEPARTMENT OF LABOR

Office of the Secretary

Submission for OMB Review; Comment Request

July 26, 2002.

The Department of Labor (DOL) has submitted the following public information collection request (ICR) to the Office of Management and Budget (OMB) for review and approval in accordance with the Paperwork Reduction Act of 1995 (Pub. L. 104–13, 44 U.S.C. Chapter 35). A copy of this ICR, with applicable supporting documentation, may be obtained by calling the Department of Labor. To obtain documentation contact Darrin King on 202–693–4129 or e-mail: *King-Darrin@dol.gov.*

Comments should be sent to Office of Information and Regulatory Affairs, Attn: OMB Desk Officer for ETA, Office of Management and Budget, Room 10235, Washington, DC 20503 (202–395–7316), within 30 days from the date of this publication in the **Federal Register**.

The OMB is particularly interested in comments which:

- Evaluate whether the proposed collection of information is necessary for the proper performance of the functions of the agency, including whether the information will have practical utility;
- Evaluate the accuracy of the agency's estimate of the burden of the proposed collection of information, including the validity of the methodology and assumptions used;
- Enhance the quality, utility, and clarity of the information to be collected; and
- Minimize the burden of the collection of information on those who are to respond, including through the use of appropriate automated, electronic, mechanical, or other technological collection techniques or other forms of information technology, e.g., permitting electronic submission of responses.

Agency: Employment and Training Administration (ETA).

Type of Review: Extension of a currently approved collection.

Title: O*NET® Data Collection Program.

OMB Number: 1205–0421.

Affected Public: Individual or households; Business or other for-profit institutions; Farms; Federal Government; and State, Local, or Tribal Government.

Type of Response: Reporting.

Frequency: Every 3 to 5 years.

Number of Respondents: 80,919.

Annual Responses: 80,919.

Average Response Time: 30 minutes to complete survey and 15 to 90 minutes for point-of-contact to perform various survey distribution and coordination activities.

Estimated Burden Hours: 33,373.

Total Annualized Capital/Startup Costs: $0.

Total Annual Costs (operating/maintaining systems or purchasing services): $0.

Description: The O*NET® Data Collection Program yields information on worker and job characteristics to populate the O*NET (Occupational Information Network) database. The O*NET system is replacing the out-of-date Dictionary of Occupational Titles, and is used for a wide range of purposes related to employment and training program administration, career counseling and development, training curriculum design, Employment Service job matching and referral, development of Labor Market Information, rehabilitation and disability programs, and private sector human resources functions. The survey includes contacting businesses to gain their cooperation, and collecting information from employees of cooperating businesses. For a small number of occupations, professional associations will be contacted to gain their cooperation in providing member lists for surveying. Subject matter experts will also be surveyed in a limited number of cases. This collection of information is authorized by the Workforce Investment act (WIA). Section 309 of Workforce Investment Act (P.L. 105–220) requires the Secretary of Labor to oversee the ''development, maintenance, and continuous improvement of a nationwide employment statistics system,'' which shall include, among other components, ''skill trends by occupation and industry.''

Ira L. Mills,

Departmental Clearance Officer.

[FR Doc. 02–19522 Filed 8–1–02; 8:45 am]

BILLING CODE 4510–30–M

DEPARTMENT OF LABOR

Office of the Secretary

Submission for OMB Review; Comment Request

July 26, 2002.

The Department of Labor (DOL) has submitted the following public information collection requests (ICRs) to the Office of Management and Budget (OMB) for review and approval in accordance with the Paperwork Reduction Act of 1995 (Pub. L. 104–13, 44 U.S.C. Chapter 35). A copy of this ICR, with applicable supporting documentation, may be obtained by calling the Department of Labor. To obtain documentation contact Darrin King on 202–693–4129 or e-mail: *King-Darrin@dol.gov.*

Comments should be sent to Office of Information and Regulatory Affairs, Attn: OMB Desk Officer for OSHA, Office of Management and Budget, Room 10235, Washington, DC 20503 (202–395–7316), within 30 days from the date of this publication in the **Federal Register**.

The OMB is particularly interested in comments which:

- Evaluate whether the proposed collection of information is necessary for the proper performance of the functions of the agency, including whether the information will have practical utility;
- evaluate the accuracy of the agency's estimate of the burden of the proposed collection of information, including the validity of the methodology and assumptions used;
- enhance the quality, utility, and clarity of the information to be collected; and
- minimize the burden of the collection of information on those who are to respond, including through the use of appropriate automated, electronic, mechanical, or other technological collection techniques or other forms of information technology, *e.g.*, permitting electronic submission of responses.

Agency: Occupational Safety and Health Administration (OSHA).

Type of Review: Extension of a currently approved collection.

Title: Servicing Multi-Piece and Single-Piece Rim Wheels—29 CFR 1910.177(d)(3)(iv).

OMB Number: 1218–0219.

Affected Public: Business or other for-profit; Not-for-profit institutions; State, Local, or Tribal Government; and Federal Government.

Frequency: On occasion.

Type of Response: Recordkeeping and Third-party disclosure.

Number of Respondents: 8.

Number of Responses: 8.

Average Time per Response: 5 minutes.

Annual Burden Hours: 1.

Total Annualized Capital/Startup Costs: $0.

Total Annual Costs (operating/maintaining systems or purchasing services): $0.

Description: 29 CFR 1910/177(d)(3)(iv) specifies one paperwork requirement. The following section describes who uses the information collected under the requirement, as well as how they use it. The purpose of the requirement is to reduce employees' risk of death or serious injury by ensuring that restraining devices used by them during the servicing of multi-piece and single piece rim wheels are in safe operating condition. Based on previous ICR approvals, OSHA has determined that the training requirements in paragraphs (c), (f), and (g) of the Standard are not collection-of-information requirements under the Paperwork Reduction Act.

Certification of Repair (paragraph (d)(3)(iv)) requires that when restraining devices and barriers are removed from service because they have been found to be defective, they shall not be returned to service until they are repaired and reinspected. If the repair is of a structural nature, the manufacturer or a Registered Professional Engineer must certify that the strength requirements specified in (d)(3)(i) of the standard have been met.

The certification records are used to assure that equipment has been properly repaired. The certification record also provide the most efficient means for the compliance officers to determine that an employer is complying with the Standard.

Agency: Occupational safety and Health Administration (OSHA).

Type of Review: Extension of a currently approved collection.

Title: Shipyard Employment Standards—29 CFR 1915.113(b)(1) and 1915.172(d).

OMB Number: 1218–0220.

Affected Public: Business or other for-profit; Not-for-profit institutions; State, Local or Tribal Government; and Federal Government.

Frequency: Quarterly and Annually.

Type of Response: Recordkeeping and Third-party disclosure.

Number of Respondents: 800.

Number of Responses: 16,320.

Average Time per Response: 30 minutes to examine and test hooks; 15 minutes to quarterly examine unfired pressure vessels; and 20 minutes to conduct a yearly hydrostatic pressure test of vessels and to generate, maintain, and disclose a certificate or a record of test results.

Annual Burden Hours: 4,416.

Total Annualized Capital/Startup Costs: $0.

Total Annual Costs (operating/maintaining systems or purchasing services): $0.

Description: The Standard specifies two paperwork requirements. The following sections describe who uses the information collected under each requirement, as well as how they use it. The purpose of these requirements is to reduce employees' risk of death or serious injury by ensuring that equipment has been tested and is in safe operating condition.

Test Records for Hooks (paragraphs 1915.113(b)(1)). This paragraph requires that the manufacturer's recommendations be followed in determining the safe working loads of the various sizes and types of hooks. If the manufacturer's recommendations are not available, the hook must be tested to twice the intended safe working load before it is initially put into use. The employer must maintain and keep readily available a certification record which includes the date of such test, the signature of the person who performed the test, and the identifier for the hook which was tested.

Examination and Test Records for Unfired Pressure Vessels (paragraph 1915.172(d)). This paragraph requires that portable, unfired pressure vessels be examined quarterly by a competent person and subjected to a yearly hyddrostatic pressure test. A certification record of such examinations and tests shall be maintained.

The records are used to assure that equipment has been properly tested. The records also provide the most efficient means for the compliance officers to determine that an employer is complying with the Standards.

Agency: Occupational Safety and Health Administration (OSHA).

Type of Review: Extension of a currently approved collection.

Title: Telecommunications, Training Certification—29 CFR 1910.168(c).

OMB Number: 1218–0225.

Affected Public: Business or other for-profit; Not-for-profit institutions; State, Local, or Tribal Government; and Federal Government.

Frequency: On occasion.

Type of Response: Recordkeeping and Third-party disclosure.

Number of Respondents: 306.

Number of Responses: 107,138.

Average Time per Response: 2 minutes for existing employees and 4 minutes for new employees.

Annual Burden Hours: 7,487.

Total Annualized Capital/Startup Costs: $0.

Total Annual Costs (operating/maintaining systems or purchasing services): $0.

Description: The Standard specifies one information-collection requirement. The following section describes who uses the information collected under the requirement, as well as how they use it. The purpose of this requirement is to ensure that employees have been trained as required by the standard to prevent risk of death or serious injury.

Under the paperwork requirement specified by paragraph (c) of the Standard, employers must certify that his or her employees have been trained as specified by the performance-language training provision of the standard. Specifically, employers must prepare a certification record which includes the identity of the person trained, the signature of the employer or the person who conducted the training, and the date the training was completed. The certification record shall be prepared at the completion of training and shall be maintained on file for the duration of the employee's employment. The information collected would be used by employers as well as compliance officers to determine that employees have been trained according to the requirements set forth in 29 CFR 1910.268(c).

Ira L. Mills,

Departmental Clearance Officer,

[FR Doc. 02–19523 Filed 8–1–02; 8:45 am]

BILLING CODE 4510–26–M

DEPARTMENT OF LABOR

Office of the Secretary

Submission for OMB Review; Comment Request

July 23, 2002.

The Department of Labor (DOL) has submitted the following public information collection request (ICR) to the Office of Management and Budget (OMB) for review and approval in accordance with the Paperwork Reduction Act of 1995 (Pub. L. 104–13, 44 U.S.C. Chapter 35). A copy of this ICR, with applicable supporting documentation, may be obtained by calling the Department of Labor. To obtain documentation contact Darrin King on 202–693–4129 or e-mail: *King-Darrin@dol.gov.*

Comments should be sent to Office of Information and Regulatory Affairs, Attn: OMB Desk Officer for ETA, Office of Management and Budget, Room 10235, Washington, DC 20503 (202–395–7316), within 30 days from the date of this publication in the **Federal Register**.

The OMB is particularly interested in comments which:

* evaluate whether the proposed collection of information is necessary for the proper performance of the functions of the agency, including whether the information will have practical utility;

* evaluate the accuracy of the agency's estimate of the burden of the proposed collection of information, including the validity of the methodology and assumptions used;

* enhance the quality, utility, and clarity of the information to be collected; and

* minimize the burden of the collection of information on those who are to respond, including through the use of appropriate automated, electronic, mechanical, or other technological collection techniques or other forms of information technology, *e.g.,* permitting electronic submission of responses.

Agency: Employment and Training Administration (ETA).

Type of Review: New collection.

Title: Study of the WIA Allocation Formula—Phase II.

OMB Number: 1205–0NEW.

Affected Public: State, Local, or Tribal Government.

Type of Response: Reporting.

Frequency: One time.

Number of Respondents: 52.

Annual Responses: 52.

Average Response Time: 1 hour.

Total Annual Burden Hours: 52.

Total Annualized Capital/Startup costs: $0.

Total Annual Costs (operating/maintaining systems or purchasing services): $0.

Description: The Study of the Workforce Investment Act (WIA) Allocation Formula is authorized by section 171(c)(2)(B) of the Act. There are two principal goals of this data collection: (1) To provide a national snapshot of the different WIA allocation formulae States use and (2) to identify alternative mechanisms by which States could consider allocating funds and how different allocation strategies impact funding levels. Respondents will be key workforce officials in each State.

Ira L. Mills,

Departmental Clearance Officer.

[FR Doc. 02–19524 Filed 8–1–02; 8:45 am]

BILLING CODE 4510–30–M

DEPARTMENT OF LABOR

Employment Standards Administration

Wage and Hour Division; Minimum Wages for Federal and Federally Assisted Construction; General Wage Determination Decisions

General wage determination decisions of the Secretary of Labor are issued in accordance with applicable law and are based on the information obtained by the Department of Labor from its study of local wage conditions and data made available from other sources. They specify the basic hourly wage rates and fringe benefits which are determined to be prevailing for the described classes of laborers and mechanics employed on construction projects of a similar character and in the localities specified therein.

The determinations in these decisions of prevailing rates and fringe benefits have been made in accordance with 29 CFR part 1, by authority of the Secretary of Labor pursuant to the provisions of the Davis-Bacon Act of March 3, 1931, as amended (46 Stat. 1494, as amended, 40 U.S.C. 276a) and of other Federal statutes referred to in 29 CFR part 1, Appendix, as well as such additional statutes as may from time to time be enacted containing provisions for the payment of wages determined to be prevailing by the Secretary of Labor in accordance with the Davis-Bacon Act. The prevailing rates and fringe benefits determined in these decisions shall, in accordance with the provisions of the foregoing statutes, constitute the minimum wages payable on Federal and federally assisted construction projects to laborers and mechanics of the specified classes engaged on contract work of the character and in the localities described therein.

Good cause is hereby found for not utilizing notice and public comment procedure thereon prior to the issuance of these determinations as prescribed in 5 U.S.C. 553 and not providing for delay in the effective date as prescribed in that section, because the necessity to issue current construction industry wage determinations frequently and in large volume causes procedures to be impractical and contrary to the public interest.

General wage determination decisions, and modifications and supersedeas decisions thereto, contain no expiration dates and are effective from their date of notice in the **Federal Register,** or on the date written notice is received by the agency, whichever is earlier. These decisions are to be used in accordance with the provisions of 29

CFR parts 1 and 5. Accordingly, the applicable decision, together with any modifications issued, must be made a part of every contract for performance of the described work within the geographic area indicated as required by an applicable Federal prevailing wage law and 29 CFR part 5. The wage rates and fringe benefits, notice of which is published herein, and which are contained in the Government Printing Office (GPO) document entitled ''General Wage Determinations Issued Under The Davis-Bacon And Related Acts,'' shall be the minimum paid by contractors and subcontractors to laborers and mechanics.

Any person, organization, or governmental agency having an interest in the rates determined as prevailing is encouraged to submit wage rate and fringe benefit information for consideration by the Department.

Further information and self-explanatory forms for the purpose of submitting this data may be obtained by writing to the U.S. Department of Labor, Employment Standards Administration, Wage and Hour Division, Division of Wage Determinations, 200 Constitution Avenue, NW., Room S–3014, Washington, DC 20210.

Modification to General Wage Determination Decisions

The number of the decisions listed to the Government Printing Office document entitled ''General Wage Determinations Issued Under the Davis-Bacon and related Acts'' being modified are listed by Volume and State. Dates of publication in the **Federal Register** are in parentheses following the decisions being modified.

Volume I

None

Volume II

Pennsylvania
PA020005 (Mar. 1, 2002)
PA020006 (Mar. 1, 2002)
PA020007 (Mar. 1, 2002)
PA020009 (Mar. 1, 2002)
PA020014 (Mar. 1, 2002)
PA020023 (Mar. 1, 2002)
PA020024 (Mar. 1, 2002)
PA020029 (Mar. 1, 2002)
PA020040 (Mar. 1, 2002)
PA020060 (Mar. 1, 2002)
West Virginia
WV020001 (Mar. 1, 2002)
WV020002 (Mar. 1, 2002)
WV020006 (Mar. 1, 2002)

Volume III

None

Volume IV

None

Volume V

None

Volume VI

Oregon
OR020001 (Mar. 1, 2002)
OR020007 (Mar. 1, 2002)
OR020017 (Mar. 1, 2002)

Volume VII

California
CA020001 (Mar. 1, 2002)
CA020002 (Mar. 1, 2002)
CA020009 (Mar. 1, 2002)
CA020019 (Mar. 1, 2002)
CA020023 (Mar. 1, 2002)
CA020025 (Mar. 1, 2002)
CA020028 (Mar. 1, 2002)
CA020029 (Mar. 1, 2002)
CA020030 (Mar. 1, 2002)
CA020031 (Mar. 1, 2002)
CA020033 (Mar. 1, 2002)
CA020035 (Mar. 1, 2002)
CA020036 (Mar. 1, 2002)
CA020037 (Mar. 1, 2002)
Hawaii
HI020001 (Mar. 1, 2002)

General Wage Determination Publication

General wage determinations issued under the Davis-Bacon and related Acts, including those noted above, may be found in the Government Printing Office (GPO) document entitled ''General Wage determinations Issued Under the Davis-Bacon and Related Acts''. This publication is available at each of the 50 Regional Government Depository Libraries and many of the 1,400 Government Depository Libraries across the country.

General wage determinations issued under the Davis-Bacon and related Acts are available electronically at no cost on the Government Printing Office site at *http://www.access.gpo.gov/davisbacon.* They are also available electronically by subscription to the Davis-Bacon Online Service (*http://davisbacon.fedworld.gov*) of the National Technical Information Service (NTIS) of the U.S. Department of Commerce at 1–800–363–2068. This subscription offers value-added features such as electronic delivery of modified wage decisions directly to the user's desktop, the ability to access prior wage decisions issued during the year, extensive Help desk Support, etc.

Hard-copy subscriptions may be purchased from: Superintendent of Documents, U.S. Government Printing Office, Washington, DC 20402. (202) 512–1800.

When ordering hard-copy subscription(s), be sure to specify the State(s) of interest, since subscriptions may be ordered for any or all of the six separate Volumes, arranged by State. Subscriptions include an annual edition (issued in January or February) which includes all current general wage determinations for the States covered by each volume. Throughout the remainder of the year, regular weekly updates will be distributed to subscribers.

Signed at Washington, DC, This 25th day of July, 2002.

Carl J. Poleskey,

Chief, Branch of Construction Wage Determinations.

[FR Doc. 02–19346 Filed 8–1–02; 8:45 am]

BILLING CODE 4510–27–M

NATIONAL FOUNDATION ON THE ARTS AND THE HUMANITIES

National Endowment for the Humanities; Meetings of Humanities Panel

AGENCY: National Endowment for the Humanities, National Foundation on the Arts and the Humanities.

ACTION: Notice of meetings.

SUMMARY: Pursuant to the provisions of the Federal Advisory Committee Act (Public Law 92–463, as amended), notice is hereby given that the following meetings of the Humanities Panel will be held at the Old Post Office, 1100 Pennsylvania Avenue, NW., Washington, DC 20506.

FOR FURTHER INFORMATION CONTACT: Heather Gottry, Acting Advisory Committee Management Officer, National Endowment for the Humanities, Washington, DC 20506; telephone (202) 606–8322. Hearing-impaired individuals are advised that information on this matter may be obtained by contacting the Endowment's TDD terminal on (202) 606–8282.

SUPPLEMENTARY INFORMATION: The proposed meetings are for the purpose of panel review, discussion, evaluation and recommendation on applications for financial assistance under the National Foundation on the Arts and the Humanities Act of 1965, as amended, including discussion of information given in confidence to the agency by the grant applicants. Because the proposed meetings will consider information that is likely to disclose trade secrets and commercial or financial information obtained from a person and privileged or confidential and/or information of a personal nature the disclosure of which would constitute a clearly unwarranted invasion of personal privacy, pursuant to authority granted me by the Chairman's Delegation of Authority to Close Advisory Committee meetings, dated July 19, 1993, I have determined

that these meetings will be closed to the public pursuant to subsections (c)(4), and (6) of section 552b of Title 5, United States Code.

1. *Date:* August 1, 2002.
Time: 8:30 a.m. to 5:30 p.m.
Room: 415.
Program: This meeting will review applications for Research Libraries, Associations, and Institutions, submitted to the Office of Challenge Grants at the May 1, 2002 deadline.

2. *Date:* August 1, 2002.
Time: 9:00 a.m. to 5:00 p.m.
Room: 315.
Program: This meeting will review applications for Fellowships Program in Asian Studies, submitted to the Division of Research Programs at the May 1, 2002 deadline.

3. *Date:* August 2, 2002.
Time: 9:00 a.m. to 5:00 p.m.
Room: 315.
Program: This meeting will review applications for Fellowships Program in British Literature I, submitted to the Division of Research Programs at the May 1, 2002 deadline.

4. *Date:* August 5, 2002.
Time: 8:30 a.m. to 5:30 p.m.
Room: 315.
Program: This meeting will review applications for Fellowships Program in Philosophy, submitted to the Division of Research Programs at the May 1, 2002 deadline.

5. *Date:* August 5, 2002.
Time: 8:30 a.m. to 5:00 p.m.
Room: 415.
Program: This meeting will review applications for Fellowships Program in British Literature II, submitted to the Division of Research Programs at the May 1, 2002 deadline.

6. *Date:* August 6, 2002.
Time: 9:00 a.m. to 5:00 p.m.
Room: 315.
Program: This meeting will review applications for Fellowships Program in Political Science, Economics, Geography, and Sociology, submitted to the Division of Research Programs at the May 1, 2002 deadline.

7. *Date:* August 7, 2002.
Time: 8:30 a.m. to 5:00 p.m.
Room: 315.
Program: This meeting will review applications for Fellowships Program in Romance Languages and Literatures, submitted to the Division of Research Programs at the May 1, 2002 deadline.

8. *Date:* August 9, 2002.
Time: 8:30 a.m. to 5:00 p.m.
Room: M–07.
Program: This meeting will review applications for Fellowships Program in Comparative Literature and Theater, submitted to the Division of Research Programs at the May 1, 2002 deadline.

9. *Date:* August 9, 2002.
Time: 8:30 a.m. to 5:00 p.m.
Room: 315.
Program: This meeting will review applications for Fellowships Program in American Studies, submitted to the Division of Research Programs at the May 1, 2002 deadline.

10. *Date:* August 12, 2002.
Time: 8:30 a.m. to 5:00 p.m.
Room: 315.
Program: This meeting will review applications for Fellowships Program in Anthropology and Archaeology, submitted to the Division of Research Programs at the May 1, 2002 deadline.

11. *Date:* August 13, 2002.
Time: 9:00 a.m. to 5:00 p.m.
Room: M–07.
Program: This meeting will review applications for Fellowships Program in Latin American Studies, submitted to the Division of Research Programs at the May 1, 2002 deadline.

12. *Date:* August 13, 2002.
Time: 8:30 a.m. to 5:00 p.m.
Room: 315.
Program: This meeting will review applications for Fellowships Program in History of Art, Architecture, and Archaeology I, submitted to the Division of Research Programs at the May 1, 2002 deadline.

13. *Date:* August 14, 2002.
Time: 8:30 a.m. to 5:00 p.m.
Room: 315.
Program: This meeting will review applications for Fellowships Program in Classical, Medieval, and Renaissance Studies, submitted to the Division of Research Programs at the May 1, 2002 deadline.

14. *Date:* August 15, 2002.
Time: 8:30 a.m. to 5:00 p.m.
Room: 315.
Program: This meeting will review applications for Fellowships Program in African and Near Eastern Studies, submitted to the Division of Research Programs at the May 1, 2002 deadline.

15. *Date:* August 19, 2002.
Time: 8:30 a.m. to 5:00 p.m.
Room: 315.
Program: This meeting will review applications for Fellowships Program in Germanic and Slavic Languages and Literatures, Literary Criticism, and Linguistics, submitted to the Division of Research Programs at the May 1, 2002 deadline.

16. *Date:* August 20, 2002.
Time: 8:30 a.m. to 5:00 p.m.
Room: 315.
Program: This meeting will review applications for Fellowships Program in Film, Communication, Rhetoric, and Media, submitted to the Division of Research Programs at the May 1, 2002 deadline.

17. *Date:* August 21, 2002.
Time: 8:30 a.m. to 5:00 p.m.
Room: 315.
Program: This meeting will review applications for Fellowships Program in History of Art and Architecture II, submitted to the Division of Research Programs at the May 1, 2002 deadline.

18. *Date:* August 22, 2002.
Time: 8:30 a.m. to 5:00 p.m.
Room: 315.
Program: This meeting will review applications for Fellowships Program in European History II, submitted to the Division of Research Programs at the May 1, 2002 deadline.

Heather Gottry,
Acting Advisory Committee Management Officer.

[FR Doc. 02–19571 Filed 8–1–02; 8:45 am]
BILLING CODE 7536–01–P

NUCLEAR REGULATORY COMMISSION

Agency Information Collection Activities: Submission for the Office of Management and Budget (OMB) Review; Comment Request

AGENCY: Nuclear Regulatory Commission (NRC).

ACTION: Notice of the OMB review of information collection and solicitation of public comment.

SUMMARY: The NRC has recently submitted to OMB for review the following proposal for the collection of information under the provisions of the Paperwork Reduction Act of 1995 (44 U.S.C. Chapter 35). The NRC hereby informs potential respondents that an agency may not conduct or sponsor, and that a person is not required to respond to, a collection of information unless it displays a current valid OMB control number.

1. *Type of submission, new, revision, or extension:* Revision.

2. *The title of the information collection:* NRC Form 313, ''Application for Material License''; and NRC Form 313A, ''Training and Experience and Preceptor Statement.''

3. *The form number if applicable:* NRC Form 313 and NRC Form 313A.

4. *How often the collection is required:* There is a one-time submittal of information to receive a license. Once a specific license has been issued, there is a 10-year resubmittal of the information for renewal of the license.

5. *Who will be required or asked to report:* All applicants requesting a license for byproduct or source material.

6. *An estimate of the number of responses:* 17,549.

7. *The estimated number of annual respondents:* 17,549 (3,743 NRC licensees + 12,726 Agreement State licensees + 1080 new modalities).

8. *An estimate of the total number of hours needed annually to complete the requirement or request:* 116,255 (26,687 hours for reporting and 89,568 hours for recordkeeping).

9. *An indication of whether Section 3507(d), Pub. L. 104–13 applies:* Not applicable.

10. *Abstract:* Applicants must submit NRC Forms 313, and 313A to obtain a specific license to possess, use, or distribute byproduct or source material. The information is reviewed by the NRC to determine whether the applicant is qualified by training and experience, and has equipment, facilities, and procedures which are adequate to protect the public health and safety, and minimize danger to life or property.

A copy of the final supporting statement may be viewed free of charge at the NRC Public Document Room, One White Flint North, 11555 Rockville Pike, Room O–1 F21, Rockville, MD 20852. OMB clearance requests are available at the NRC World Wide Web site: *http://www.nrc.gov/public-involve/doc-comment/omb/index.html.* The document will be available on the NRC home page site for 60 days after the signature date of this notice.

Comments and questions should be directed to the OMB reviewer listed below by September 3, 2002. Comments received after this date will be considered if it is practical to do so, but assurance of consideration cannot be given to comments received after this date.

Bryon Allen,
Office of Information and Regulatory Affairs (3150–0120),
NEOB–10202,
Office of Management and Budget,
Washington, DC 20503.

Comments can also be submitted by telephone at (202) 395–3087.

The NRC Clearance Officer is Brenda Jo. Shelton, 301–415–7233.

Dated at Rockville, Maryland, this 29th day of July, 2002.

For the Nuclear Regulatory Commission.

Brenda Jo. Shelton,

NRC Clearance Officer, Office of the Chief Information Officer.

[FR Doc. 02–19536 Filed 8–1–02; 8:45 am]

BILLING CODE 7590–01–P

NUCLEAR REGULATORY COMMISSION

[Docket No. 50–251]

Florida Power and Light Company; Notice of Consideration of Issuance of Amendment to Facility Operating License, Proposed No Significant Hazards Consideration Determination, and Opportunity for a Hearing

The U.S. Nuclear Regulatory Commission (the Commission) is considering issuance of an amendment to Facility Operating License No. DPR–41, issued to Florida Power and Light (the licensee), for operation of the Turkey Point Unit 4 located in Miami-Dade County.

The proposed amendment would modify the existing rod position Technical Specifications to allow the use of an alternate method of determining rod position for a control rod with an inoperable rod position indication. This would be effective until repair of the indication system can be completed.

The reason for the exigency is due to the unanticipated failure of the Turkey Point Unit 4 Analog Rod Position Indication for control rod C–9 in Shutdown Bank A which was declared inoperable on Thursday, July 25, 2002. Additionally, there is a concern regarding excessive wear due to exercising the movable incore detectors every 8 hours (90 times per month), to comply with the compensatory actions required by the current Action Statement a. of TS 3.1.3.2.

Before issuance of the proposed license amendment, the Commission will have made findings required by the Atomic Energy Act of 1954, as amended (the Act) and the Commission's regulations.

Pursuant to 10 CFR 50.91(a)(6) for amendments to be granted under exigent circumstances, the NRC staff must determine that the amendment request involves no significant hazards consideration. Under the Commission's regulations in 10 CFR 50.92, this means that operation of the facility in accordance with the proposed amendment would not (1) involve a significant increase in the probability or consequences of an accident previously evaluated; or (2) create the possibility of a new or different kind of accident from any accident previously evaluated; or (3) involve a significant reduction in a margin of safety. As required by 10 CFR 50.91(a), the licensee has provided its analysis of the issue of no significant hazards consideration, which is presented below:

Florida Power and Light Company (FPL) has concluded that the proposed amendment to the Turkey Point Unit 4 operating license does not involve a significant hazards consideration. In support of this determination, an evaluation of each of the three standards set forth in 10 CFR 50.92 is provided below.

1. Will operation of the facility in accordance with this proposed change involve a significant increase in the probability or consequences of an accident previously evaluated?

No. The proposed change provides an alternative method for verifying rod position of one shutdown rod. The proposed change meets the intent of the current specification in that it ensures verification of position of the shutdown rod once every eight (8) hours. The proposed change provides only an alternative method of monitoring shutdown rod position and does not change the assumption or results of any previously evaluated accident.

Therefore, operation of the facility in accordance with the proposed amendment would not involve a significant increase in the probability or consequences of an accident previously evaluated.

2. Will operation of the facility in accordance with this proposed change create the possibility of a new or different kind of accident from any accident previously evaluated?

No. As described above, the proposed change provides only an alternative method of determining the position of one shutdown rod. No new accident initiators are introduced by the proposed alternative manner of performing rod position verification. The proposed change does not affect the reactor protection system or the reactor control system. Hence, no new failure modes are created that would cause a new or different kind of accident from any accident previously evaluated.

Therefore, operation of the facility in accordance with the proposed amendments would not create the possibility of a new or different kind of accident from any previously evaluated.

3. Will operation of the facility in accordance with this proposed change involve a significant reduction in a margin of safety?

No. The bases of Specification 3.1.3.2 state that the operability of the rod position indicators is required to determine control rod positions and thereby ensure compliance with the control rod alignment and insertion limits. The proposed change does not alter the requirement to determine rod position but provides an alternative method for determining the position of the affected rod. As a result, the initial conditions of the accident analysis are preserved and the consequences of previously analyzed accidents are unaffected.

Therefore, operation of the facility in accordance with the proposed amendments would not involve a significant reduction in the margin of safety.

Based on the reasoning presented above, FPL has determined that the requested changes involve no significant hazards consideration.

The NRC staff has reviewed the licensee's analysis and, based on this review, it appears that the three standards of 10 CFR 50.92(c) are satisfied. Therefore, the NRC staff proposes to determine that the amendment request involves no significant hazards consideration.

The Commission is seeking public comments on this proposed determination. Any comments received within 14 days after the date of publication of this notice will be considered in making any final determination.

Normally, the Commission will not issue the amendment until the expiration of the 14-day notice period. However, should circumstances change during the notice period, such that failure to act in a timely way would result, for example, in derating or shutdown of the facility, the Commission may issue the license amendment before the expiration of the 14-day notice period, provided that its final determination is that the amendment involves no significant hazards consideration. The final determination will consider all public and State comments received. Should the Commission take this action, it will publish in the **Federal Register** a notice of issuance. The Commission expects that the need to take this action will occur very infrequently.

Written comments may be submitted by mail to the Chief, Rules and Directives Branch, Division of Administrative Services, Office of Administration, U.S. Nuclear Regulatory Commission, Washington, DC 20555–0001, and should cite the publication date and page number of this **Federal Register** notice. Written comments may also be delivered to Room 6D59, Two White Flint North, 11545 Rockville Pike, Rockville, Maryland, from 7:30 a.m. to 4:15 p.m. Federal workdays. Documents may be examined, and/or copied for a fee, at the NRC's Public Document Room, located at One White Flint North, 11555 Rockville Pike (first floor), Rockville, Maryland.

The filing of requests for hearing and petitions for leave to intervene is discussed below.

By September 3, 2002, the licensee may file a request for a hearing with respect to issuance of the amendment to the subject facility operating license and any person whose interest may be affected by this proceeding and who wishes to participate as a party in the proceeding must file a written request for a hearing and a petition for leave to intervene. Requests for a hearing and a petition for leave to intervene shall be filed in accordance with the Commission's ''Rules of Practice for Domestic Licensing Proceedings'' in 10 CFR Part 2. Interested persons should consult a current copy of 10 CFR 2.714,[1] which is available at the Commission's Public Document Room, located at One White Flint North, 11555 Rockville Pike (first floor), Rockville, Maryland, and available electronically on the Internet at the NRC Web site *http://www.nrc.gov/reading-rm/doc-collections/cfr/.* If a request for a hearing or petition for leave to intervene is filed by the above date, the Commission or an Atomic Safety and Licensing Board, designated by the Commission or by the Chairman of the Atomic Safety and Licensing Board Panel, will rule on the request and/or petition; and the Secretary or the designated Atomic Safety and Licensing Board will issue a notice of hearing or an appropriate order.

As required by 10 CFR 2.714, a petition for leave to intervene shall set forth with particularity the interest of the petitioner in the proceeding, and how that interest may be affected by the results of the proceeding. The petition should specifically explain the reasons why intervention should be permitted with particular reference to the following factors: (1) The nature of the petitioner's right under the Act to be made a party to the proceeding; (2) the nature and extent of the petitioner's property, financial, or other interest in the proceeding; and (3) the possible effect of any order which may be entered in the proceeding on the petitioner's interest. The petition should also identify the specific aspect(s) of the subject matter of the proceeding as to which petitioner wishes to intervene. Any person who has filed a petition for leave to intervene or who has been admitted as a party may amend the petition without requesting leave of the Board up to 15 days prior to the first prehearing conference scheduled in the proceeding, but such an amended petition must satisfy the specificity requirements described above.

Not later than 15 days prior to the first prehearing conference scheduled in the proceeding, a petitioner shall file a supplement to the petition to intervene which must include a list of the contentions which are sought to be litigated in the matter. Each contention must consist of a specific statement of the issue of law or fact to be raised or controverted. In addition, the petitioner shall provide a brief explanation of the bases of the contention and a concise statement of the alleged facts or expert opinion which support the contention and on which the petitioner intends to rely in proving the contention at the hearing. The petitioner must also provide references to those specific sources and documents of which the petitioner is aware and on which the petitioner intends to rely to establish those facts or expert opinion. Petitioner must provide sufficient information to show that a genuine dispute exists with the applicant on a material issue of law or fact. Contentions shall be limited to matters within the scope of the amendment under consideration. The contention must be one which, if proven, would entitle the petitioner to relief. A petitioner who fails to file such a supplement which satisfies these requirements with respect to at least one contention will not be permitted to participate as a party.

Those permitted to intervene become parties to the proceeding, subject to any limitations in the order granting leave to intervene, and have the opportunity to participate fully in the conduct of the hearing, including the opportunity to present evidence and cross-examine witnesses.

If the amendment is issued before the expiration of the 30-day hearing period, the Commission will make a final determination on the issue of no significant hazards consideration. If a hearing is requested, the final determination will serve to decide when the hearing is held.

If the final determination is that the amendment request involves no significant hazards consideration, the Commission may issue the amendment and make it immediately effective, notwithstanding the request for a hearing. Any hearing held would take place after issuance of the amendment.

If the final determination is that the amendment request involves a significant hazards consideration, any hearing held would take place before the issuance of any amendment.

[1] The most recent version of Title 10 of the Code of Federal Regulations, published January 1, 2002, inadvertently omitted the last sentence of 10 CFR 2.741(d) and subparagraphs (d)(1) and (2), regarding petitions to intervene and contentions. Those provisions are extant and still applicable to petitions to intervene. Those provisions are as follows: ''In all other circumstances, such ruling body or officer shall, in ruling on—

(1) A petition for leave to intervene or a request for hearing, consider the following factors, among other things: (i) The nature of the petitioner's right under the Act to be made a party to the proceeding. (ii) The nature and extent of the petitioner's property, financial, or other interest in the proceeding. (iii) The possible effect of any order that may be entered in the proceeding on the petitioner's interest.

(2) The admissibility of a contention, refuse to admit a contention if: (i) The contention and supporting material fail to satisfy the requirements of paragraph (b)(2) of this section; or (ii) The contention, if proven, would be of no consequence in the proceeding because it would not entitle petitioner to relief.''

A request for a hearing or a petition for leave to intervene must be filed with the Secretary of the Commission, U.S. Nuclear Regulatory Commission, Washington, DC 20555–0001, Attention: Rulemakings and Adjudications Staff, or may be delivered to the Commission's Public Document Room, located at One White Flint North, 11555 Rockville Pike (first floor), Rockville, Maryland, by the above date. Because of continuing disruptions in delivery of mail to United States Government offices, it is requested that petitions for leave to intervene and requests for hearing be transmitted to the Secretary of the Commission either by means of facsimile transmission to 301–415–1101 or by e-mail to *hearingdocket@nrc.gov.* A copy of the request for hearing and petition for leave to intervene should also be sent to the Office of the General Counsel, U.S. Nuclear Regulatory Commission, Washington, DC 20555–0001, and because of continuing disruptions in delivery of mail to United States Government offices, it is requested that copies be transmitted either by means of facsimile transmission to 301–415–3725 or by e-mail to *OGCMailCenter@nrc.gov.* A copy of the request for hearing and petition for leave to intervene should also be sent to M.S. Ross, Attorney, Florida Power & Light, P.O. Box 14000, Juno Beach, Florida 33408–0420, attorney for the licensee.

Nontimely filings of petitions for leave to intervene, amended petitions, supplemental petitions and/or requests for hearing will not be entertained absent a determination by the Commission, the presiding officer or the presiding Atomic Safety and Licensing Board that the petition and/or request should be granted based upon a balancing of the factors specified in 10 CFR 2.714(a)(1)(i)-(v) and 2.714(d).

For further details with respect to this action, see the application for amendment dated July 29, 2002, which is available for public inspection at the Commission's Public Document Room (PDR), located at One White Flint North, 11555 Rockville Pike (first floor), Rockville, Maryland. Publicly available records will be accessible electronically from the Agencywide Documents Access and Management System's (ADAMS) Public Electronic Reading Room on the Internet at the NRC web site *http://www.nrc.gov/reading-rm/adams.html.* Persons who do not have access to ADAMS or who encounter problems in accessing the documents located in ADAMS, should contact the NRC PDR Reference staff by telephone at 1–800–397–4209, 301–415–4737, or by e-mail to *pdr@nrc.gov.*

Dated at Rockville, Maryland, this 29th day of July, 2002.

For the Nuclear Regulatory Commission.

Eva A. Brown,

Project Manager, Section 2, Project Directorate II, Division of Licensing Project Management, Office of Nuclear Reactor Regulation.

[FR Doc. 02–19537 Filed 8–1–02; 8:45 am]

BILLING CODE 7590–01–P

NUCLEAR REGULATORY COMMISSION

Notice of Opportunity To Comment on Model Safety Evaluation on Technical Specification Improvement To Modify Requirements Regarding Mode Change Limitations Using the Consolidated Line Item Improvement Process

AGENCY: Nuclear Regulatory Commission.

ACTION: Request for comment.

SUMMARY: Notice is hereby given that the staff of the Nuclear Regulatory Commission (NRC) has prepared a model safety evaluation (SE) relating to the modification of requirements regarding technical specifications (TS) mode change limitations. The NRC staff has also prepared a model no significant hazards consideration (NSHC) determination relating to this matter. The purpose of these models is to permit the NRC to efficiently process amendments that propose to modify requirements that limit changing operational modes. Licensees of nuclear power reactors to which the models apply could then request amendments, confirming the applicability of the SE and NSHC determination to their reactors. The NRC staff is requesting comment on the model SE and model NSHC determination prior to announcing their availability for referencing in license amendment applications.

DATES: The comment period expires September 3, 2002. Comments received after this date will be considered if it is practical to do so, but the Commission is able to ensure consideration only for comments received on or before this date.

ADDRESSES: Comments may be submitted either electronically or via U.S. mail.

Submit written comments to Chief, Rules and Directives Branch, Division of Administrative Services, Office of Administration, Mail Stop: T–6 D59, U.S. Nuclear Regulatory Commission, Washington, DC 20555–0001. Hand deliver comments to: 11545 Rockville Pike, Rockville, Maryland, between 7:45 a.m. and 4:15 p.m. on Federal workdays. Copies of comments received may be examined at the NRC's Public Document Room, 11555 Rockville Pike (Room O–1F21), Rockville, Maryland. Comments may be submitted by electronic mail to *CLIIP@nrc.gov.*

FOR FURTHER INFORMATION CONTACT: Robert Dennig, Mail Stop: O–12H4, Division of Regulatory Improvement Programs, Office of Nuclear Reactor Regulation, U.S. Nuclear Regulatory Commission, Washington, DC 20555–0001, telephone 301–415–1156.

SUPPLEMENTARY INFORMATION:

Background

Regulatory Issue Summary 2000–06, ''Consolidated Line Item Improvement Process for Adopting Standard Technical Specification Changes for Power Reactors,'' was issued on March 20, 2000. The consolidated line item improvement process (CLIIP) is intended to improve the efficiency of NRC licensing processes, by processing proposed changes to the standard technical specifications (STS) in a manner that supports subsequent license amendment applications. The CLIIP includes an opportunity for the public to comment on proposed changes to the STS after a preliminary assessment by the NRC staff and finding that the change will likely be offered for adoption by licensees. This notice solicits comment on a proposed change to the STS that modifies requirements for mode change limitations. The CLIIP directs the NRC staff to evaluate any comments received for a proposed change to the STS and to either reconsider the change or announce the availability of the change for adoption by licensees. Licensees opting to apply for this TS change are responsible for reviewing the staff's evaluation, referencing the applicable technical justifications, and providing any necessary plant-specific information. Each amendment application made in response to the notice of availability will be processed and noticed in accordance with applicable rules and NRC procedures.

This notice involves the modification of TS requirements regarding mode change limitations. This change was proposed for incorporation into the standard technical specifications by the Owners Groups participants in the Technical Specification Task Force (TSTF) and is designated TSTF–359. TSTF–359 can be viewed on the NRC's Web page at *http://www.nrc.gov/reactors/operating/licensing/techspecs.html.*

Applicability

This proposal to modify technical specification requirements for mode change limitations is applicable to all licensees who have adopted or will adopt, in conjunction with the proposed change, technical specification requirements for a Bases control program consistent with the TS Bases Control Program described in Section 5.5 of the applicable vendor's STS.

To efficiently process the incoming license amendment applications, the staff requests that each licensee applying for the changes proposed in TSTF–359 include Bases for the proposed TS consistent with the Bases proposed in TSTF–359. In addition, licensees that have not adopted requirements for a Bases control program by converting to the improved STS or by other means, are requested to include the requirements for a Bases control program consistent with the STS in their application for the proposed change. The need for a Bases control program stems from the need for adequate regulatory control of some key elements of the proposal that are contained in the proposed Bases for LCO 3.0.4 and SR 3.0.4. The staff is requesting that the Bases be included with the proposed license amendments in this case because the changes to the TS and the changes to the associated Bases form an integral change to a plant's licensing bases. To ensure that the overall change, including the Bases, includes appropriate regulatory controls, the staff plans to condition the issuance of each license amendment on the licensee's incorporation of the changes into the Bases document and on requiring the licensee to control the changes in accordance with the Bases Control Program. The CLIIP does not prevent licensees from requesting an alternative approach or proposing the changes without the requested Bases and Bases control program. However, deviations from the approach recommended in this notice may require additional review by the NRC staff and may increase the time and resources needed for the review.

Public Notices

This notice requests comments from interested members of the public within 30 days of the date of publication in the **Federal Register**. After evaluating the comments received as a result of this notice, the staff will either reconsider the proposed change or announce the availability of the change in a subsequent notice (perhaps with some changes to the safety evaluation or the proposed no significant hazards consideration determination as a result of public comments). If the staff announces the availability of the change, licensees wishing to adopt the change must submit an application in accordance with applicable rules and other regulatory requirements. For each application the staff will publish a notice of consideration of issuance of amendment to facility operating licenses, a proposed no significant hazards consideration determination, and a notice of opportunity for a hearing. The staff will also publish a notice of issuance of an amendment to operating license to announce the modification of requirements for mode change limitations for each plant that receives the requested change.

Proposed Safety Evaluation

U.S. Nuclear Regulatory Commission, Office of Nuclear Reactor Regulation, Consolidated Line Item Improvement, Technical Specification Task Force (TSTF) Change TSTF–359, Changes to Limiting Condition for Operation 3.0.4 and Surveillance Requirement 3.0.4 Regarding Mode Change Limitations

1.0 Introduction

On March 9, 2001, the Nuclear Energy Institute (NEI) Risk Informed Technical Specifications Task Force (RITSTF) submitted a proposed change, TSTF–359, Revision 5, to the standard technical specifications (STS) (NUREGs 1430–1434) on behalf of the industry (TSTF–359 Revisions 1 through 4 were internal NEI iterations). TSTF–359, Revision 5, is a proposal to change the STS Limiting Condition for Operation (LCO) 3.0.4 and Surveillance Requirement (SR) 3.0.4 requirements regarding mode change limitations. The proposed change would modify LCO 3.0.4 and SR 3.0.4 by risk informing limitations on entering the mode of applicability of a LCO.

At the July 31, 2001, NRC/RITSTF meeting, the staff provided verbal comments, questions and requests for additional information (RAIs) pertaining to TSTF–359, Revision 5. In response to the staff RAIs and questions, the RITSTF submitted TSTF–359, Revision 6, on February 22, 2002. In a letter of April 26, 2002, the staff suggested specific changes that were needed, and after further discussions, the RITSTF submitted the final TSTF–359, Revision 7, on July 17, 2002. This proposal is one of the industry's initiatives under the risk-informed technical specifications program. These initiatives are intended to maintain or improve safety while reducing unnecessary burden and to make technical specification requirements consistent with the Commission's other risk-informed regulatory requirements, in particular the maintenance rule.

The current technical specifications (TS) specify that a nuclear power plant cannot go to higher modes of operation [1] (*i.e.*, move towards power operation) unless all TS systems, normally required for the higher mode, are operable. This limitation is included (with several exceptions for some plants) in LCO 3.0.4 and SR 3.0.4. LCO 3.0.4 and SR 3.0.4 in the STS currently state in part that when an LCO or SR is not met, ''entry into a MODE or other specified condition in the applicability shall not be made except when the associated actions to be entered permit continued operation in the MODE or other specified condition in the applicability for an unlimited period of time.'' The industry believes that this requirement is unnecessarily restrictive and can unduly delay plant startup while considerable resources are being used to resolve startup issues that are risk insignificant or low risk. A maintenance activity that takes longer than planned can delay a mode change and adversely impact a utility's orderly plant startup and return to power operation. The objective of the proposed change is to provide additional operational flexibility without compromising plant safety.

The proposed changes to LCO 3.0.4 and SR 3.0.4 would allow, for systems and components, mode changes into a TS condition that has a specific required action and completion time. The licensee will utilize the LCO 3.0.4 or SR 3.0.4 allowance only when they determine that there is a high likelihood that the LCO will be satisfied within the LCO completion time (CT), after the mode change. In addition, the LCO 3.0.4 and SR 3.0.4 allowances can be applied to values and parameters in specifications when explicitly stated in the TS (non-system/component TS such as: Reactor Coolant System Specific Activity). These changes are in addition to the current mode change allowance when a required action has an indefinite completion time. The LCO 3.0.4 and SR 3.0.4 mode change allowances are not permitted for the systems and components (termed ''higher risk'') listed in Section 3.1.1, ''Identification of Risk Important TS Systems and Components,'' for the modes specified. Two examples are: (1) Westinghouse plants cannot transition from Mode 5 to Mode 4 without a High Head Safety Injection System train operable; and, (2)

[1] MODE numbers decrease in the transition ''up to a higher mode of operation''; power operation is MODE 1.

Westinghouse plants cannot transition up into any mode with an inoperable required emergency diesel generator.

2.0 Regulatory Evaluation

In 10 CFR 50.36, the Commission established its regulatory requirements related to the content of TS. Pursuant to 10 CFR 50.36, TS are required to include items in the following five specific categories related to station operation: (1) Safety limits, limiting safety system settings, and limiting control settings; (2) limiting conditions for operation (LCOs); (3) surveillance requirements (SRs); (4) design features; and (5) administrative controls. The rule does not specify the particular requirements to be included in a plant's TS. As stated in 10 CFR 50.36(c)(2)(i), the ''Limiting conditions for operation are the lowest functional capability or performance levels of equipment required for safe operation of the facility. When a limiting condition for operation of a nuclear reactor is not met, the licensee shall shut down the reactor or follow any remedial action permitted by the technical specification * * *'' By convention, the LCOs are contained in Sections 3.1 through 3.10 of the TS. TS Section 3.0, on ''LCO and SR Applicability,'' provide details or ground rules for complying with the LCOs. LCO 3.0.4 and SR 3.0.4 address requirements for LCO compliance when transitioning between modes of operation.

Technical specifications have taken advantage of risk technology as experience and capability have increased. Since the mid-1980's, the NRC has been reviewing and granting improvements to technical specifications that are based, at least in part, on probabilistic risk assessment (PRA) insights. In its final policy statement on technical specification improvements of July 22, 1993, the Commission stated that it expects that licensees will utilize any plant specific PRA or risk survey in preparing their technical specification related submittals. In evaluating these submittals, the staff applies the guidance in RG 1.174, ''An Approach for Using Probabilistic Risk Assessment in Risk-Informed Decisions on Plant-Specific Changes to the Licensing Basis,'' dated July 1998 and in RG 1.177, ''An Approach for Plant-Specific, Risk-Informed Decisionmaking: Technical Specifications,'' dated August 1998. The staff has appropriately adapted this guidance to assess the acceptability of upward mode changes with equipment inoperable. This review had the following objectives:

- To ensure that the plant risk does not increase unacceptably during the actual implementation of the proposed change (*e.g.*, when the plant enters a higher mode while an LCO is not met). This risk increase is referred to as ''temporary.''
- To compare and assess the risk impact of the proposed change to the acceptance guidelines of the Commission's Safety Goal Policy Statement, as documented in RG 1.174. The risk impact, which is measured by the average yearly risk increase associated with the change, aims at minimizing the ''cumulative'' risk associated with the proposed change so that the plant's average baseline risk is maintained within a minimal range.
- To assess the licensee's ability to identify risk significant configurations resulting from maintenance or other operational activities and take appropriate compensatory measures to avoid such configurations.

The staff reviewed the reliance on 10 CFR 50.65(a)(4) for the non-higher risk systems and components, and related guidance to assess and manage the risk of upward mode changes. The Commission has found that compliance with 10 CFR 50.65(a)(4) satisfies the configuration risk management objectives of RG 1.177 for technical specification surveillance interval and completion time extensions. Reliance on 10 CFR 50.65(a)(4) processes was also found adequate for managing risk of missed surveillances as described in the **Federal Register** on September 28, 2001 (66 FR 49714).

The staff review also had the objective of ensuring that existing inspection programs have the necessary controls in place to allow NRC staff to oversee the implementation of the proposed change, reliance on 10 CFR 50.65(a)(4), and the ability to adequately assess the licensee's performance associated with risk assessments. The review encompassed inspection procedures (*i.e.*, NRC Inspection Procedure 62709 (12/28/00), ''Configuration Risk Assessment and Risk Management Process,'' and NRC Inspection Procedure 71111.13 (1/17/02), ''Maintenance Risk Assessments and Emergent Work Control''), the significance determination process (SDP) (*i.e.*, draft ''Maintenance Risk Assessment and Risk Management Significance Determination Process''), enforcement guidance (*i.e.*, draft Enforcement Manual Section 8.1.11, ''Actions Involving the Maintenance Rule''), and the associated reactor oversight process.

2.1 Proposed Change to LCO 3.0.4 and SR 3.0.4

Currently LCO 3.0.4 does not allow entrance into a higher mode (or other specified condition) in the applicability when an LCO is not met, except when the associated actions to be entered permit continued operation in that mode or condition indefinitely or a specific exception is granted. Similarly, when an LCO's surveillances have not been met within their specified frequency, entry into a higher mode (or other specified condition) is not allowed by SR 3.0.4. The current STS [2] LCO 3.0.4 reads:

''When an LCO is not met, entry into a MODE or other specified condition in the Applicability shall not be made except when the associated ACTIONS to be entered permit continued operation in the MODE or other specified condition in the Applicability for an unlimited period of time. This Specification shall not prevent changes in MODES or other specified conditions in the Applicability that are required to comply with ACTIONS or that are part of a shutdown of the unit.

Exceptions to this Specification are stated in the individual Specifications. These exceptions allow entry into MODES or other specified conditions in the Applicability when the associated ACTIONS to be entered allow unit operation in the MODE or other specified condition in the Applicability only for a limited period of time.

LCO 3.0.4 is only applicable for entry into a MODE or other specified conditions in the Applicability in [MODES 1, 2, 3, and 4 {for PWRs}][MODES 1, 2, and 3 {for BWRs}].''

The revised LCO 3.0.4 will read:

''When an LCO is not met, entry into a MODE or other specified condition in the Applicability shall only be made

(a) when the associated Actions to be entered permit continued operation in that MODE or other specified condition in the Applicability for an unlimited period of time, or

(b) after performance of a risk assessment addressing inoperable systems and components, consideration of the results, determination of the acceptability of entering the MODE or other specified condition in the Applicability, and establishment of risk management actions, if appropriate; exceptions to this Specification are stated in the individual Specifications, or

(c) when an allowance is stated in the individual value or parameter Specification.'' This Specification shall not prevent changes in MODES or other specified conditions in

[2] Plant specific wording for current equivalent LCO 3.0.4 is similar to current STS LCO 3.0.4 wording.

the Applicability that are required to comply with ACTIONS or that are part of a shutdown of the unit.

LCO 3.0.4 is only applicable for entry into a MODE or other specified conditions in the Applicability in [MODES 1, 2, 3, and 4 {for PWRs}][MODES 1, 2, and 3 {for BWRs}].''

The current STS [3] SR 3.0.4 reads:

''Entry into a MODE or other specified condition in the Applicability of an LCO shall not be made unless the LCO's Surveillances have been met within their specified frequency. This provision shall not prevent entry into MODES or other specified conditions in the Applicability that are required to comply with ACTIONS or that are part of a shutdown of the unit.

SR 3.0.4 is only applicable for entry into a MODE or other specified conditions in the Applicability in [MODES 1, 2, 3, and 4 {for PWRs}][MODES 1, 2, and 3 {for BWRs}].''

The revised SR 3.0.4 will conform to the changes to LCO 3.0.4 and read:

''Entry into a MODE or other specified condition in the Applicability of an LCO shall not be made unless the LCO's Surveillances have been met within their specified frequency. When an LCO is not met due to a Surveillance not having been met, entry into a MODE or other specified condition in the Applicability shall only be made

(a) when the associated Actions to be entered permit continued operation in that MODE or other specified condition in the Applicability for an unlimited period of time, or

(b) after performance of a risk assessment addressing inoperable systems and components, consideration of the results, determination of the acceptability of entering the MODE or other specified condition in the Applicability, and establishment of risk management actions, if appropriate; exceptions to this Specification are stated in the individual Specifications, or

(c) when an allowance is stated in the individual value or parameter Specification.

This provision shall not prevent entry into MODES or other specified conditions in the Applicability that are required to comply with ACTIONS or that are part of a shutdown of the unit.

SR 3.0.4 is only applicable for entry into a MODE or other specified conditions in the Applicability in [MODES 1, 2, 3, and 4 {for PWRs}][MODES 1, 2, and 3 {for BWRs}].''

The proposed LCO 3.0.4(a) retains the current allowance for when the required actions allow indefinite operation. The proposed LCO 3.0.4(b) and SR 3.0.4(b) allow entering modes or other specified conditions in the applicability except when higher risk systems and components (listed in section 3.1.1), for the mode being entered, are inoperable. The decision for entering a higher mode or condition in the applicability of the LCO will be made by plant management after the required risk assessment has been performed and requisite risk management actions established, through the program established to implement 10 CFR 50.65(a)(4). Entry into the modes or other specified conditions in the applicability of the TS shall be for no more than the duration of the applicable required actions completion time or until the LCO is met. Current notes in individual specifications that permitted mode changes are now encompassed by LCO 3.0.4(b) and can be removed. Notes that prohibit mode changes under LCO 3.0.4(b) must be added (i.e., for higher risk systems and components). The proposed LCO 3.0.4(b) and SR 3.0.4(b) allowances can involve multiple components in a single LCO or in multiple LCOs; however, use of the LCO 3.0.4(b) and SR 3.0.4(b) provisions are always contingent upon completion of a 10 CFR 50.65(a)(4) based risk assessment.

LCO 3.0.4 or SR 3.0.4 allowances related to values and parameters of TS are not typically addressed by LCO 3.0.4(b) or SR 3.0.4(b) risk assessments, and are therefore addressed by a new LCO 3.0.4(c) and SR 3.0.4(c). LCO 3.0.4(c) and SR 3.0.4(c) refer to allowances already in the TS and annotated in the individual TS. LCO 3.0.4(c) and SR 3.0.4(c) also allow for entry into the modes or other specified conditions in the applicability of a TS for no more than the duration of the applicable required actions completion time or until the LCO is met. Examples of LCO 3.0.4 and SR 3.0.4 utilization of required actions and completion times are provided in Appendix A for clarification.

3.0 Technical Evaluation

During the development of the current STS, improvements were made to LCO 3.0.4, such as clarifying its applicability with respect to plant shutdowns, cold shutdown mode and refueling mode. In addition, during the STS development, almost all the LCOs with completion times greater than or equal to 30 days, and many LCOs with completion times greater than or equal to 7 days, were given individual LCO 3.0.4 exceptions. During some conversions to the STS, individual plants provided acceptable justifications for other LCO 3.0.4 exceptions. All of these specific LCO 3.0.4 exceptions allow entry into a mode or other specified condition in the TS applicability while relying on the TS required actions and associated completion times. The proposed change under evaluation would provide standardization and consistency to the use and application of LCO 3.0.4 and SR 3.0.4, both internal to and between each of the specifications and STS NUREGs. This proposed change will also ensure consistency through the utilization of appropriate levels of risk assessment of plant configurations for application of LCO 3.0.4 and SR 3.0.4. However, nothing in this safety evaluation should be interpreted as encouraging upward mode transition with inoperable equipment. Good practice should dictate that such transitions should normally be initiated only when all required equipment is operable and that mode transition with inoperable equipment should be the exception rather than the rule.

The current LCO 3.0.4(a) and SR 3.0.4(a) allowances are retained in the proposal and do not represent a change in risk from the current situation. The LCO 3.0.4(b) and SR 3.0.4(b) allowances apply to systems and components, and require a risk assessment prior to utilization to ensure an acceptable level of safety is maintained. The LCO 3.0.4(c) and SR 3.0.4(c) allowances apply to parameters and values which have been previously approved by the NRC in a plants specific TS. The licensee will provide in their TS Bases a discussion and list of each NRC approved LCO 3.0.4(c) and SR 3.0.4(c) specific value and parameter allowances. The Bases of LCO 3.0.4 and SR 3.0.4 will be revised to explain the new allowances and their utilization.

The staff did a qualitative assessment of the risk impact of the proposed change in LCO 3.0.4(b) and SR 3.0.4(b) allowances by evaluating how the licensee's implementation of the proposed risk-informed approach is expected to meet the requirements of the applicable RGs. The staff referred to the guidance provided in RG 1.174, ''An Approach for Using Probabilistic Risk Assessment in Risk-Informed Decisions on Plant-Specific Changes to the Licensing Basis,'' and in RG 1.177, ''An approach for Plant-Specific, Risk-Informed Decsionmaking: Technical Specifications.'' RG 1.177 provides the staff's recommendations on utilizing risk-information to assess the impact of proposed changes to nuclear power plant technical specifications on the risk associated with plant operation. Although RG 1.177 does not specifically address the type of generic change in this proposal, the staff considered the approach documented in RG 1.177 in evaluating the risk information provided in support of the proposed change in LCO 3.0.4 and SR 3.0.4.

The staff's evaluation of how the implementation of the proposed risk-informed approach, used to justify LCO 3.0.4(b) and SR 3.0.4(b) allowances, agrees with the objectives of the

[3] Plant specific wording for current equivalent SR 3.0.4 is similar to current STS SR 3.0.4 wording.

guidance outlined in RG 1.177 is discussed in Section 3.1. Oversight of the risk-informed approach associated with the LCO 3.0.4(b) and SR 3.0.4(b) allowances is discussed in Section 3.2.

3.1 Evaluation of Risk Management

Both the temporary and cumulative risk of the proposed change are adequately limited. The temporary risk is limited by the exclusion of higher risk systems and components, and completion time limits contained in technical specifications (Section 3.1.1). The cumulative risk is limited by the temporary risk limitations and by the expected low frequency of the proposed mode changes with inoperable equipment (Section 3.1.2). NRC oversight of a licensee's implementation of 10 CFR 50.65(a)(4) as applied to the proposed change provides adequate assurance of the licensee's ability to use the LCO 3.0.4(b) or SR 3.0.4(b) provisions under appropriate circumstances, *i.e.,* to identify risk-significant configurations when entering a higher mode or condition in the applicability of an LCO (Section 3.1.3).

3.1.1 Temporary Risk Increases

RG 1.177 proposes the incremental conditional core damage probability (ICCDP) and the incremental conditional large early release probability (ICLERP) as appropriate measures of the increase in probability of core damage and large early release, respectively, during the period of implementation of a proposed TS change. In addition, RG 1.177 stresses the need to preclude potentially high risk configurations introduced by the proposed change. The ICCDP associated with any specified plant condition, such as the condition introduced by entering a higher mode with plant equipment inoperable, is expressed by the following equation:

$$ICCDP = \Delta R\ d = (R_1 - R_o)\ d \qquad (1)$$

where

ΔR = the conditional risk increase, in terms of core damage frequency (CDF), caused by the specified condition

d = the duration of the specified plant condition

R_1 = the plant CDF with the specified condition permanently present

R_o = the plant CDF without the specified condition

The same expression can be used for ICLERP by substituting the measure of risk, i.e., large early release frequency (LERF) for CDF. The magnitude of the ICCDP and ICLERP values associated with plant conditions applicable to LCO 3.0.4(b) and SR 3.0.4(b) allowances can be managed by controlling the conditional risk increase, ΔR (in terms of both CDF and LERF) and the duration, d, of such conditions. The following sections discuss how the key elements of the proposed risk-informed approach, used to justify LCO 3.0.4(b) and SR 3.0.4(b) allowances, are expected to limit ΔR and d and, thus, prevent any significant temporary risk increases.

Identification of Risk Important TS Systems and Components. A major element that limits the risk of the proposed mode change flexibility is the exclusion of certain systems and associated LCOs for the mode change allowance. Technical specifications allow operation in Mode 1 (power operation) with specified levels of inoperability for specified times. This provides a benchmark of currently acceptable risk against which to measure any incremental risk inherent in the proposed LCO 3.0.4(b) and SR 3.0.4(b). If a system inoperability accrues risk at a higher rate in one or more of the transition modes than it would in Mode 1, then an upward transition into that mode should not be allowed without demonstration of a high degree of experience and sophistication in risk management. However, the risk management process evaluated in Section 3.1.3 is adequate if high risk systems/components are excluded from the scope of LCO 3.0.4(b) and SR 3.0.4(b).

The importance of most TS systems in mitigating accidents increases as power increases. However, some TS systems are relatively more important during lower power and shutdown operations, because:

- certain events are peculiar to modes of plant operation other than power operation,
- certain events are more probable at modes of plant operation other than power operation,
- some modes of plant operation have less mitigation system capability than power operation.

The risk information submitted in support of the proposed changes to LCO 3.0.4 and SR 3.0.4 includes qualitative risk assessments performed by each owners group to identify higher risk systems and components at the various modes of operation, including transitions between modes, as the plant moves upward from the refueling mode of operation toward power operation. The owners groups' generic qualitative risk assessments are included as attachments to TSTF–359, Revision 7. Each of the owners groups' generic qualitative risk assessments discuss the technical approach used and the systems/components subsequently determined to be of higher risk significance; the systems/components not to be granted the LCO 3.0.4 or SR 3.0.4 allowances for the various modes listed. The owners groups generic qualitative risk assessments are:

- BWR Owners' Group Risk-informed Technical Specification Committee, ''Technical Justification to Support Risk-informed Improvements to Technical Specification Mode Restraints for BWR Plants,'' General Electric Company GE–NE A13–00464 (Rev[2]).
- ''B&W Owners Group Qualitative Risk Assessment for Increased Flexibility in MODE Restraints,'' Framatome Technologies BAW–2383.
- Combustion Engineering Owners Group (CEOG) Task 1181, ''Qualitative Risk Assessment for Relaxation of Mode Entry Restraints,'' CE Nuclear Power LLC, CE NPSD–1207 (Rev[0]).
- ''WOG Qualitative Risk Assessment Supporting Increased Flexibility in MODE Restraints.''

Following interactions with the staff, all owners groups used the same systematic approach in their qualitative risk assessments to identify the higher risk systems in the STS, consisting of the following steps:

- identification of plant conditions (*i.e.,* plant parameters and availability of key mitigation systems) associated with changes in plant operating modes while returning to power.
- identification of key activities that have the potential to impact risk and which are in progress during transitions between modes while the plant is returning to power.
- identification of applicable accident initiating events for each mode or other specified condition in the applicability.
- identification of the higher risk systems and components by combining the information in the first three steps (qualitative risk assessment).

The risk assessments properly used the results and insights from previous deterministic and probabilistic studies to systematically search for plant conditions in which certain key plant components are more important in mitigating accidents than at power operation (Mode 1). This search was systematic, taking the following factors into account for the various stages of returning the plant to power:

- the status of accident mitigation and normally operating systems.
- the status of key plant parameters such as reactor coolant system pressure.
- the key activities that are in progress during transitions between modes which have the potential to impact risk (*e.g.* the transfer from

auxiliary to main feedwater at some PWR plants when Mode 1 is entered).

• the applicable accident initiating events for each mode of plant operation.

• design and operational differences among plants or groups of plants.

The following systems and components were identified by each of the four owners groups as higher risk systems and components, when the plant is entering a new mode.

BOILING WATER REACTOR OWNERS GROUP (BWROG) PLANTS

System	BWR type	Entering mode
High Pressure Coolant Injection (HPCI) System	BWR 3 & 4	2, 1
High Pressure Core Spray (HPCS)	BWR 5 & 6	2, 1
Reactor Core Isolation Cooling (RCIC) System	BWR 3, 4, 5 & 6	2, 1
Isolation Condenser Diesel Generators (including other	BWR 2	2, 1
Emergency/Shutdown AC Power Supplies)	All	All
Hardened Wetwell Vent System	BWR 2, 3 & 4 with Mark I Containment	3, 2, 1
Residual Heat Removal System	All	4

System	Entering Mode
Babcock & Wilcox Owners Group (B&WOG) Plants	
Emergency Diesel Generators (EDG) & Hydro-Electric Units for Oconee	5, 4, 3, 2, 1
Emergency Feedwater (EFW) System	1
Decay Heat Removal (DHR) System	5, 4
Combustion Engineering Owners Group (CEOG) Plants	
Emergency Diesel Generators (EDGs)	5, 4, 3, 2, 1
Auxiliary Feedwater/Emergency Feedwater (AFW/EFW) System	4, 3, 2, 1
High Pressure Safety Injection (HPSI) System	4, 3 (below 1700 psia)
LTOP/PORVs (when used for Low Temperature Overpressure Protection (LTOP))	5, 4 (below set temperature)
Shutdown Cooling System (Low Pressure Safety Injection (LPSI) pumps)	5
Westinghouse Owners Group (WOG) Plants	
Emergency Diesel Generators (EDGs)	5, 4, 3, 2, 1
Auxiliary Feedwater (AFW) System (for plants depending on AFW for startup)	4, 3, 2, 1
High Head Safety Injection System	4
Cold Overpressure Protection System	5, 4
Residual Heat Removal (RHR) System	5

If a licensee identifies a higher risk system for only some of the modes of applicability, the TS for that system would be modified by a Note that reads, for example, ''LCO 3.0.4(b) is not applicable when entering MODE 1 from MODE 2.'' Systems identified as higher risk for modes outside the applicability of LCO 3.0.4 and SR 3.0.4 (Modes 5 and 6 for PWRs, and Modes 4 and 5 for BWRs), are also to be excluded from transitioning up to the mode of higher risk, however, those systems will be addressed by administrative controls.

In summary, the staff's review of the owners groups qualitative risk assessments finds that they are of adequate quality to support the application (*i.e.,* they identify the higher risk systems and components) associated with entering higher modes of plant operation with equipment inoperable while returning to power.

[Plant Specific changes will be described here.]

Limited Time in TS Required Actions. Any temporary risk increase will be limited by, among other factors, duration constraints imposed by the TS CTs of the inoperable systems. For the systems and components which are not higher risk, any temporary risk increase associated with the proposed allowance will be smaller than what is considered acceptable when the same systems and components are inoperable at power. This is due to the fact that CTs associated with the majority of TS systems and components were developed for power operation and pose a smaller plant risk for action statement entries initiated or occurring at lower modes of operation as compared to power operation.

The LCO 3.0.4(b) or SR 3.0.4(b) allowance will be used only when the licensee determines that there is a high likelihood that the LCO will be satisfied following the mode change. This will minimize the likelihood of additional temporary risk increases associated with the need to exit a mode due to failure to restore the unavailable equipment within the CT. As discussed in Section 3.2, the revised reactor oversight process monitors unplanned power changes as a performance indicator. The reactor oversight process thus discourages licensees from entering a mode or other specified condition in the applicability of an LCO, and moving up in power, when there is a likelihood that the mode would have to be subsequently exited due to failure to restore the unavailable equipment within the CT.

3.1.2 Cumulative Risk Increases

The cumulative risk impact of the change to allow the plant to enter a higher mode of operation with one or more safety-related components unavailable (as proposed here), is measured by the average yearly risk increase associated with the change. In general, this cumulative risk increase is assessed in terms of both CDF and LERF (*i.e.,* ΔDCDF and ΔLERF, respectively). The increase in CDF due to the proposed change is expressed by the following equation, which integrates the risk impact from all expected specified conditions (*i.e.,* all expected plant conditions caused by mode changes with various TS systems and components unavailable).

$$\Delta CDF = \sum(\Delta CDF_i) = \sum ICCDP_i\ f_i \quad (2)$$

where

ΔCDF_i = the CDF increase due to specified condition i

$ICCDP_i$ = the ICCDP associated with specified condition i

f_i = the average yearly frequency of occurrence of specified condition i

A similar expression can be used for ΔLERF by substituting the measure of risk, *i.e.,* LERF for CDF. The magnitude of the ΔCDF and ΔLERF values associated with plant conditions applicable to LCO 3.0.4(b) or SR 3.0.4(b) allowances can be managed by controlling the temporary risk increases, in terms of both CDF and LERF (*i.e.,* ICCDP and ICLERP), and the frequency (f), of each of such conditions. In addition to the points made in the previous section regarding temporary risk increases, the following points put into perspective how the key elements of the proposed risk-informed approach, used to justify an LCO 3.0.4(b) or SR 3.0.4(b) allowance, are expected to prevent significant cumulative risk increases by limiting the frequency of its use:

- The frequency of risk significant conditions will be limited by not providing the LCO 3.0.4(b) and SR 3.0.4(b) allowances to the higher risk systems and components.
- The frequency of risk significant conditions will be limited by the requirement to assess the likelihood that the LCO will be satisfied following the mode change. In addition, the reactor oversight process discourages licensees from entering a mode or other specified condition in the applicability of an LCO and moving up in power when it is likely that the mode would have to be subsequently exited due to failure to restore the unavailable equipment within the completion time.
- The frequency of risk significant conditions is limited by the fact that such conditions can occur only when the plant is returning to power following shutdown, i.e., during a small fraction of time per year (data over the past five years indicates that the plants are averaging 2.1 startups per year).

The addition of the proposed LCO 3.0.4(b) or SR 3.0.4(b) allowances to the plant maintenance activities is not expected to change the plant's average (cumulative) risk significantly.

3.1.3 Risk Assessment and Risk Management of Mode Changes

With all safety systems and components operable, a plant can transition up in mode to power operation. With one or more system(s) or component(s) inoperable, this change permits a plant to transition up in mode to power operation if the inoperable system(s) or component(s) are not in the pre-analyzed higher risk category, a 10 CFR 50.65(a)(4) based risk assessment is performed prior to the mode transition, and the requisite risk management actions are taken. The proposed TS Bases state, ''When an LCO is not met, LCO 3.0.4 also allows entering MODES or other specified conditions in the Applicability following assessment of the risk impact and determination that the impact can be managed. The risk assessment may use quantitative, qualitative, or blended approaches, and the risk assessment will be conducted using the plant program, procedures, and criteria in place to implement 10 CFR 50.65(a)(4), which requires that risk impacts of maintenance activities to be assessed and managed.'' It should be noted that, the risk assessment, for the purposes of LCO 3.0.4(b) and SR 3.0.4(b), must take into account all inoperable TS equipment regardless whether the equipment is included in the licensee's normal 10 CFR 50.65(a)(4) risk assessment scope. The risk assessments will be conducted using the procedures and guidance endorsed by Regulatory Guide 1.182, ''Assessing and Managing Risk Before Maintenance Activities at Nuclear Power Plants.'' The results of the risk assessment shall be considered in determining the acceptability of entering the MODE or other specified condition in the Applicability, and any corresponding risk management actions. * * * A risk assessment and establishment of risk management actions, as appropriate, are required for determination of acceptable risk for entering MODES or other specified conditions in the Applicability when an LCO is not met. Elements of acceptable risk assessment and risk management actions are included in Section 11 of NUMARC 93–01 ''Assessment of Risk Resulting from Performance of Maintenance Activities,'' as endorsed by RG 1.182 which addresses general guidance for conduct of the risk assessment, quantitative and qualitative guidelines for establishing risk management actions, and example risk management actions. These risk management actions include actions to plan and conduct other activities in a manner that controls overall risk, increased risk awareness by shift and management personnel, actions to reduce the duration of the conditions, actions to minimize the magnitude of risk increases (establishment of backup success paths or compensatory measures), and determination that the proposed MODE change is acceptable.

The guidance references state that a licensee's risk assessment process should be sufficiently robust and comprehensive to assess risk associated with maintenance activities during power operating, low power and shutdown conditions (all modes of operation), including changes in plant conditions. NUMARC 93–01 states that the risk assessment should include consideration of: the degree of redundancy available for performance of the safety function(s) served by the out of service equipment; the duration of the out of service condition; component and system dependencies that are affected; the risk impact of performing the maintenance during shutdown versus at power; and, the impact of mode transition risk. For power operation, key plant safety functions are those that ensure the integrity of the reactor coolant pressure boundary, ensure the capability to shut down and maintain the reactor in safe shutdown condition, and ensure the capability to prevent or mitigate the consequences of accidents that could result in potentially significant offsite exposures.

While the inoperabilities permitted by the completion times of technical specification required actions take into consideration the safety significance and redundancy of the system or components within the scope of an LCO, the completion times generally do not address or consider concurrent system or component inoperabilities in multiple LCOs. Therefore, the performance of the 10 CFR 50.65(a)(4) risk assessment which looks at the entire plant configuration is essential (and required) prior to changing operational mode. The 10 CFR 50.65(a)(4) risk assessment will confirm (or reject) the appropriateness of transitioning up in mode given the actual status of plant safety equipment.

The risk impact on the plant condition of invoking an LCO 3.0.4(b) or SR 3.0.4(b) allowance will be assessed and managed through the program established to implement 10 CFR 50.65(a)(4). This program is consistent with RG 1.177 and RG 1.174 in its approach. The Maintenance Rule implementation guidance addresses controlling temporary risk increases resulting from maintenance activities. This guidance, consistent with guidance in RG 1.177, establishes action thresholds based on qualitative and

quantitative considerations and risk management actions. Significant temporary risk increases following an LCO 3.0.4(b) or SR 3.0.4(b) allowance are unlikely to occur unless:

- High risk configurations are allowed (*e.g.,* certain combinations of multiple component outages), or
- Risk management of plant operation activities is inadequate.

The requirements associated with the proposed change are established to ensure that such conditions will not occur.

The thresholds of the cumulative (aggregate) risk impacts, assessed pursuant to 10 CFR 50.65(a)(4) and the associated implementation guidance, are based on the permanent change guidelines in NRC RG 1.174. Therefore, licensees will manage the risk exercising LCO 3.0.4 or SR 3.0.4 in conjunction with the risk from other concurrent plant activities to ensure that any increase, in terms of core damage frequency (CDF) and large early release frequency (LERF) will be small and consistent with the Commission's Safety Goal Policy Statement.

3.2 Oversight

The reactor oversight process (ROP) provides a means for assessing the licensee's performance in the application of the proposed mode change flexibility. The adequacy of the licensee's assessment and management of maintenance-related risk is addressed by existing inspection programs and guidance for 50.65(a)(4). Although the current versions of that guidance do not specifically address application of the licensee's (a)(4) program to support risk-informed technical specifications, it is expected that in most cases, risk assessment and management associated with risk-informed technical specifications would be required by (a)(4) anyway.

Adoption of the proposed change will make failure to assess and manage the risk of an upward mode change with inoperable equipment covered by technical specifications, prior to commencing such a mode change, a violation of technical specifications. Further, as explained above in general, under most foreseeable circumstances, such a change in configuration would also require a risk assessment under 10 CFR 50.65(a)(4). Inoperable systems or components will necessitate maintenance to restore them to operability, and hence a 10 CFR 50.65(a)(4) risk assessment would be performed prior to the performance of those maintenance actions (except for immediate plant stabilization and restoration actions if necessary). Further, before altering the plant's configuration, including plant configuration changes associated with mode changes, the licensee must update the existing (a)(4) risk assessment to reflect those changes.

The **Federal Register** Notice issuing a revision to the maintenance rule, 10 CFR 50.65, (**Federal Register**, Vol 64 No 137, Monday, July 19, 1999, pg 38553), along with NRC Inspection Procedure 71111.13, and Section 11, dated February 22, 2000, ''Assessment of Risk Resulting from Performance of Maintenance Activities,'' of NUMARC 93–01, all indicate that to determine the safety impact of a change in plant conditions during maintenance, a risk assessment must be performed before changing plant conditions. The Bases for the proposed TS change mandate that the risk assessment and management of upward mode changes will be conducted under the licensee's program and process for meeting 10 CFR 50.65(a)(4). Oversight of licensee performance in assessing and managing the risk of plant maintenance activities is conducted principally by inspection in accordance with Reactor Oversight Program Baseline Inspection Procedure (IP) 71111.13, ''Maintenance Risk Assessment and Emergent Work Control.'' Supplemental IP 62709, ''Configuration Risk Assessment and Risk Management Process,'' is utilized to evaluate the licensee's process, when necessary. Appendix B of this SE presents excerpts from IP 71111.13 and IP 62709 that provide evidence of how the oversight of licensee risk assessment and risk management activities is accomplished.

The ROP is described in overview in NUREG–1649, Rev 3, ''Reactor Oversight Process,'' and in detail in the NRC Inspection Manual. Inspection Procedure 71111.13 requires verification of performance of risk assessments when they are required by 10 CFR 50.65(a)(4) and in accordance with licensee procedures. The procedure also requires verification of the adequacy of those risk assessments and verification of effective implementation of licensee-prescribed risk management actions. The rule itself requires such assessment and management of risk prior to maintenance activities, including preventive maintenance, surveillance and testing, (and promptly for emergent work) during all modes of plant operation. The guidance documents for both industry implementation of (a)(4) and NRC oversight of that implementation indicate that changes in plant configuration (which would include mode changes) in support of maintenance activities must be taken into account in the risk assessment and management process. Revisions to NRC inspection guidance and licensee implementation procedures will be needed to address oversight of risk assessment and management required by TS in support of mode changes that are not already required under the circumstances by (a)(4). This consideration provides performance-based regulatory oversight of the use of the proposed flexibility, and a disincentive to use the flexibility without the requisite care in planning.

In addition, the staff is in the process of developing detailed significance determination process (SDP) guidance for use in assessing inspection findings related to 10 CFR 50.65(a)(4). This guidance was issued in draft for comment and is expected to become final in Fall 2002. The ROP considers inspection findings and performance indicators in evaluating licensee ability to operate safely. The SDP is used to determine the significance of inspection findings related to licensee assessment and management of the risk associated with performing maintenance activities under all plant operating or shutdown conditions. Unplanned reactor shutdowns (automatic and manual) and unplanned power changes are two of the Reactor Safety Performance Indicators that the ROP utilizes to assess licensee performance and inform the public. Thus, the ROP provides a disincentive to entering a mode or other specified condition in the applicability of an LCO and moving up in power, when there is a significant likelihood that the mode would have to be subsequently exited due to failure to restore the unavailable equipment within the completion time.

3.3 Summary

The industry, through the Nuclear Energy Institute (NEI) Risk Informed Technical Specifications Task Force (RITSTF), has submitted a proposed technical specification (TS) change to allow entry into a higher mode of operation, or other specified condition in the TS applicability, while relying on the TS conditions, and associated required actions and completion times, provided a risk assessment is performed to confirm the acceptability of that action. The proposal revises standard technical specification (STS) LCO 3.0.4 and SR 3.0.4, and their application to the TS. New paragraphs (a), (b), and (c) are proposed for LCO 3.0.4 and SR 3.0.4.

The proposed LCO 3.0.4(a) and SR 3.0.4(a) retain the current allowance, permitting the mode change when the TS required actions allow indefinite operation.

Proposed LCO 3.0.4(b) and SR 3.0.4(b) is the change to allow entry into a higher mode of operation, or other specified condition in the TS applicability, while relying on the TS conditions and associated required actions and completion times, provided a risk assessment is performed to confirm the acceptability of that action for the existing plant configuration. The staff review finds that the process proposed by industry for assessing and managing risk during the implementation of the proposed LCO 3.0.4(b) and SR 3.0.4(b) allowances, meets Commission guidance for technical specification changes. Key elements of this process are listed below.

- A risk assessment shall be performed before any LCO 3.0.4(b) or SR 3.0.4(b) allowance is invoked.
- The risk impact on the plant condition of invoking an LCO 3.0.4(b) or SR 3.0.4(b) allowance will be assessed and managed through the program established to implement 10 CFR 50.65(a)(4) and the associated guidance in RG 1.182. Allowing entry into a higher mode or condition in the applicability of an LCO after an 10 CFR 50.65(a)(4) based risk assessment and appropriate risk management actions are taken for the existing plant configuration will ensure that plant safety is maintained.
- The LCO 3.0.4(b) or SR 3.0.4(b) allowance will be used only when the licensee determines that there is a high likelihood that the LCO will be satisfied within the required action's completion time.
- TS systems and components which may be of higher risk during mode changes have been identified generically by each owner's group for each plant operational mode or condition. Licensees will identify such plant specific systems and components in the individual plant TS. The proposed LCO 3.0.4(b) and SR 3.0.4(b) allowances do not apply to these systems and components for the mode or condition in the applicability of an LCO at which they are of higher risk.
- Plants adopting LCO 3.0.4(b) and SR 3.0.4(b) will ensure that plant procedures in place to implement 10 CFR 50.65(a)(4) address the situation where entering a mode or other specified condition in the applicability is contemplated with plant equipment inoperable. Such plant procedures typically follow the guidance in NUMARC 93–01, Section 11, as revised in February 2000 and endorsed by NRC RG 1.182.

The NRC's reactor oversight process provides the framework for inspectors and other staff to oversee the implementation of 10 CFR 50.65(a)(4) requirements at a specific plant and assess the licensee's actions and performance.

The LCO 3.0.4(b) and SR 3.0.4(b) allowance does not apply to values and parameters of the technical specifications that have their own respective LCOs (e.g., Reactor Coolant System Specific Activity), but instead those values and parameters are addressed by LCO 3.0.4(c) and SR 3.0.4(c). The TS values and parameters for which mode transition allowances apply, will have a note that states LCO 3.0.4(c) or SR 3.0.4(c) is applicable.

The objective of the proposed change is to provide additional operational flexibility without compromising plant safety.

4.0 State Consultation

In accordance with the Commission's regulations, the [ ] State official was notified of the proposed issuance of the amendment. The State official had [(1) no comments or (2) the following comments—with subsequent disposition by the staff].

5.0 Environmental Consideration

The amendments change a requirement with respect to the installation or use of a facility component located within the restricted area as defined in 10 CFR part 20 and change surveillance requirements. [For licensees adding a Bases Control Program: The amendment also changes record keeping, reporting, or administrative procedures or requirements.] The NRC staff has determined that the amendments involve no significant increase in the amounts and no significant change in the types of any effluents that may be released offsite, and that there is no significant increase in individual or cumulative occupational radiation exposure. The Commission has previously issued a proposed finding that the amendments involve no significant hazards considerations, and there has been no public comment on the finding. Accordingly, the amendments meet the eligibility criteria for categorical exclusion set forth in 10 CFR 51.22(c)(9) [and (c)(10)]. Pursuant to 10 CFR 51.22(b), no environmental impact statement or environmental assessment need be prepared in connection with the issuance of the amendments.

6.0 Conclusion

The Commission has concluded, on the basis of the considerations discussed above, that (1) there is reasonable assurance that the health and safety of the public will not be endangered by operation in the proposed manner, (2) such activities will be conducted in compliance with the Commission's regulations, and (3) the issuance of the amendments will not be inimical to the common defense and security or to the health and safety of the public.

Proposed No Significant Hazards Consideration Determination

Description of Amendment Request: A change is proposed to the standard technical specifications (STS) (NUREGs 1430 through 1434) and plant specific technical specifications (TS), to allow entry into a mode or other specified condition in the applicability of a TS, while in a condition statement and the associated required actions of the TS, provided the licensee performs a risk assessment and manages risk consistent with the program in place for complying with the requirements of 10 CFR 50.65(a)(4). LCO 3.0.4 and SR 3.0.4 exceptions in individual TS would be eliminated, and SR 3.0.4 revised to reflect the LCO 3.0.4 allowance.

Basis for proposed no significant hazards consideration determination: As required by 10 CFR 50.91(a), an analysis of the issue of no significant hazards consideration is presented below:

Criterion 1—The Proposed Change Does Not Involve a Significant Increase in the Probability or Consequences of an Accident Previously Evaluated

The proposed change allows entry into a mode or other specified condition in the applicability of a TS, while in a TS condition statement and the associated required actions of the TS. Being in a TS condition and the associated required actions is not an initiator of any accident previously evaluated. Therefore, the probability of an accident previously evaluated is not significantly increased. The consequences of an accident while relying on required actions as allowed by proposed LCO 3.0.4, are no different than the consequences of an accident while entering and relying on the required actions while starting in a condition of applicability of the TS. Therefore, the consequences of an accident previously evaluated are not significantly affected by this change. The addition of a requirement to assess and manage the risk introduced by this change will further minimize possible concerns. Therefore, this change does not involve a significant increase in the probability or consequences of an accident previously evaluated.

Criterion 2—The Proposed Change Does Not Create the Possibility of a New or Different Kind of Accident From any Previously Evaluated

The proposed change does not involve a physical alteration of the plant (no new or different type of equipment will be installed). Entering into a mode or other specified condition in the applicability of a TS, while in a TS condition statement and the associated required actions of the TS, will not introduce new failure modes or effects and will not, in the absence of other unrelated failures, lead to an accident whose consequences exceed the consequences of accidents previously evaluated. The addition of a requirement to assess and manage the risk introduced by this change will further minimize possible concerns. Thus, this change does not create the possibility of a new or different kind of accident from an accident previously evaluated.

Criterion 3—The Proposed Change Does Not Involve a Significant Reduction in the Margin of Safety

The proposed change allows entry into a mode or other specified condition in the applicability of a TS, while in a TS condition statement and the associated required actions of the TS. The TS allow operation of the plant without the full complement of equipment through the conditions for not meeting the TS Limiting Conditions for Operation (LCO). The risk associated with this allowance is managed by the imposition of required actions that must be performed within the prescribed completion times. The net effect of being in a TS condition on the margin of safety is not considered significant. The proposed change does not alter the required actions or completion times of the TS. The proposed change allows TS conditions to be entered, and the associated required actions and completion times to be used in new circumstances. This use is predicated upon the licensee's performance of a risk assessment and the management of plant risk. The change also eliminates current allowances for utilizing required actions and completion times in similar circumstances, without assessing and managing risk. The net change to the margin of safety is insignificant. Therefore, this change does not involve a significant reduction in a margin of safety.

Based upon the reasoning presented above and the previous discussion of the amendment request, the requested change does not involve a significant hazards consideration.

Dated at Rockville, Maryland, this 26th day of July, 2002.

For the Nuclear Regulatory Commission.

Robert L. Dennig,

Section Chief, Technical Specifications Section, Operating Improvements Branch, Division of Regulatory Improvement Programs, Office of Nuclear Reactor Regulation.

Appendix A

LCO 3.0.4 Examples

Example 1, LCO 3.0.4(a), (NUREG–1431): The plant is in Mode 3 ready to go to Mode 1, power operation, with one power range neutron flux channel inoperable. LCO 3.3.1, ''Reactor Trip System (RTS) Instrumentation,'' Table 3.3.1–1, Function 2.a., requires four power range neutron flux-high channels to be operable, and the applicability is Modes 1 and 2. With one power range neutron flux-high channel inoperable, Condition D, Required Actions D.1.1 and D.1.2 require the inoperable channel to be placed in trip within 6 hours and reduce thermal power to ≤ 75% RTP within 12 hours; or, Required Actions D.2.1 and D.2.2 require placing the inoperable channel in trip within 6 hours and verifying QPTR is within limits (performance of SR 3.2.4.2) once per 12 hours. Verifying QPTR is within limits is only required if the power range neutron flux input to QPTR is inoperable. The plant can proceed to Mode 2 (or further, *i.e.,* Mode 1) as long as the Required Actions of Condition D are met. If the plant has proceeded to Mode 2 (or further, *i.e.,* Mode 1) and the Required Actions of Condition D have not been met, the plant must be placed in Mode 3. No risk assessment is required because the allowance of LCO 3.0.4(a) applies. However, risk assessment may be required by 10 CFR 50.65(a)(4).

Example 2, LCO 3.0.4(b), (NUREG–1431): The plant is in Mode 5 ready to go to Mode 1, power operation, with one component cooling water (CCW) train inoperable. LCO 3.7.7, ''Component Cooling Water (CCW),'' requires two CCW trains to be operable and the applicability is Modes 1, 2, 3, and 4. With one CCW train inoperable Required Action A.1 of LCO 3.7.7 requires the inoperable CCW train to be restored and the completion time is 72 hours. There is also a note applied to Required Action A.1 that requires entry into applicable Conditions and Required Actions of LCO 3.4.6, ''RCS Loops—MODE 4,'' for residual heat removal loops made inoperable by CCW. If a residual heat removal loop is being used to comply with LCO 3.4.6, and that loop is made inoperable by the inoperable CCW train, the completion times for the applicable conditions and required actions of LCO 3.4.6 may be more restrictive than those of LCO 3.7.7. The plant can proceed to Mode 4 if there is reasonable assurance that the inoperable CCW train can be restored to operable status within the applicable completion time, and a risk assessment has been performed and requisite risk management actions have been implemented. If the plant has proceeded to Mode 4 (or further, *i.e.,* Mode 3, 2, or 1) and the inoperable CCW train has not been restored within the required completion time, the plant must return to Mode 5. Note that if two trains of CCW are inoperable, the plant cannot proceed to Mode 4 because LCO 3.7.7 does not contain a condition for two inoperable CCW trains.

Example 3, LCO 3.0.4(b), (NUREG–1431): The plant is in Mode 5 ready to go to Mode 1, power operation (with steam generators operable). In Case 1, one required Atmospheric Dump Valve (ADV) line is inoperable. In Case 2, two or three required ADV lines are inoperable.

Case 1—LCO 3.7.4, ''Atmospheric Dump Valves (ADVs),'' requires three ADV lines to be operable and the Applicability is Modes 1, 2, and 3 and Mode 4 when steam generator is relied upon for heat removal. With one required ADV line inoperable Required Action A.1 requires the required ADV line to be restored with a Completion Time of seven days. The plant can proceed to Mode 4 (when steam generator(s) are relied on for heat removal) provided there is reasonable assurance that the required ADV line can be restored within 7 days, and a risk assessment has been performed and requisite risk management actions have been implemented. If the plant has proceeded to Mode 4 (or further, *i.e.,* Mode 3, 2, or 1) and the required ADV is not restored within 7 days, the plant must return to Mode 5 (if steam generator(s) are being used for heat removal) or Mode 4 where steam generators are not being used for heat removal, as applicable.

Case 2—With two or three required ADV lines inoperable, Condition B, Required Action B.1 requires restoration of all but one of the required ADV lines within a Completion Time of 24 hours. The plant can proceed to Mode 4 (when steam generators are relied on for heat removal) provided there is reasonable assurance that the required ADV lines will be restored, and a risk assessment has been performed and requisite risk management actions have been implemented. After the plant has restored all but one of the required ADV lines to operability within 24 hours, the final required ADV line must be restored within seven days from the time of entry into Mode 4. If the plant has proceeded to Mode 4 (or further, *i.e.*, Mode 3, 2 or 1) and the required ADV lines have not been restored within the applicable completion time, the plant must return to Mode 5 or Mode 4 (where steam generators are not relied on for heat removal).

Appendix B

Reactor Oversight Process, Inspection Procedures 71111.13 and 62709 Excerpts

Inspection Procedure (IP) 71111.13, ''Maintenance Risk Assessment and Emergent Work Control''

IP 71111.13–02, Inspection Requirements, 02.01, Risk Assessment and Management of Risk

a. *Risk Assessment Performance.* Verify performance of risk assessments when required by 10 CFR 50.65(a)(4) and in accordance with licensee procedures, prior to changes in plant configuration for maintenance activities, including preventive maintenance, surveillance and testing, (and promptly for emergent work) during all

modes of plant operation. Verify risk assessment performance for configuration changes involving structures, systems or components * * *

b. *Risk Assessment Adequacy*. Verify the accuracy and completeness of the information considered in the risk assessment. Verify the appropriate use of the risk assessment tool, i.e., that the licensee uses it in a manner consistent with (1) its capabilities and limitations, (2) plant conditions and evolutions, (3) external events and containment status, and (4) licensee procedures. * * *

c. *Risk Management*. Verify that the licensee recognizes, and/or enters as applicable, the appropriate licensee-established risk category or band according to risk assessment results and licensee procedures. Verify that normal work controls or risk management actions as required are promptly and effectively implemented commensurate with the risk band in effect and in accordance with licensee procedures. Verify that the key safety functions for the plant mode of operation are preserved. * * *

IP 71111.13, Appendix A, Risk Assessment Performance Verification Phase

''Determine if a Risk Assessment (RA) was required using the following criteria:

1. *When required*. RAs are required by (a)(4) prior to maintenance-related plant configuration changes and are normally performed for scheduled maintenance. However, emergent conditions, such as external events or SSC failures or degraded performance in service or during testing, may require actions prior to performing an RA, or could invalidate the existing RA. In this case, the RA should be performed (or reevaluated) to address the changed plant conditions. The industry guidance, revised Section 11 of NUMARC 93001, as endorsed by RG 1.182, states that if the plant configuration is restored prior to conducting or reevaluating the RA, the RA need not be conducted, or reevaluated if already performed. Nevertheless, to the extent practicable and commensurate with safety, the licensee should perform or reevaluate the RA before changing the plant configuration further, but in any case, promptly and to the extent practicable concurrently with, but without delaying, plant stabilization and restoration. Note that licensee deviation from work schedules and work plans, just as emergent work can, may invalidate risk assessments prepared for the maintenance period (e.g., the common 12-week rolling schedule).

2. *Operating Modes When RA Required*. RAs are required by (a)(4) for maintenance activities performed during all modes of plant operation and transitions between modes. For (a)(4) purposes, at power means normal steaming (Mode 1) and startup (Mode 2). Shutdown means hot standby (Mode 3 in a pressurized water reactor (PWR) only), hot shutdown (Mode 3 in a boiling water reactor, Mode 4–PWR), cold shutdown (Mode 5), and refueling (Mode 6). Plants without a shutdown probabilistic risk assessment (PRA) must still assess shutdown maintenance risk by some means, typically an expert panel using a qualitative (key safety function) or blended qualitative/quantitative approach. * * *''

Supplemental IP 62709, ''Configuration Risk Assessment and Risk Management Process'

IP62709

An appropriate assessment would include a review of the current configuration of the plant and the plant configuration expected during the planned maintenance activity. Assessing the current plant configuration as well expected changes to plant configuration due to the planned maintenance activities is intended to insure that the plant is not inadvertently placed in risk-significant configurations. * * * Furthermore, assessing the degree of safety function degradation requires that there be an understanding of the impact of maintenance activities on the capability of the plant to prevent or mitigate accidents and transients, as well as the potential impact of external conditions (*e.g.,* inclement weather, electrical grid instability, flooding or seismic events) on plant maintenance configurations. The assessments may range from deterministic judgments to the use of an on-line PSA tool. * * * The process for performing these safety assessments should be scrutable and repeatable. Known limitations in the assessment process should be described in the licensee's Maintenance Rule program documentation. The licensee's process should be sufficiently robust and comprehensive to assess maintenance activities during power operating conditions and low power and shutdown conditions. The sophistication of the assessment(s) for evaluating the risk of a maintenance configuration should be commensurate with the complexity of the configuration.

IP 62709, 02.02 *Configuration Risk Assessments*: Determine if the licensee has adequately assessed the overall effect on the performance of safety functions when SSCs are removed from service for surveillance or maintenance activities. Obtain plant operating/maintenance records for at least two or three monthly periods of high maintenance activities during power operation with a particular focus on periods when trains of components were removed from service or when components of different trains were out of service simultaneously for surveillance or maintenance. In the case of plant shutdown conditions, select two or three weekly periods of plant outage surveillance or maintenance activities with a particular focus on periods of reduced reactor coolant system inventory, reduced shutdown cooling availability, or reduced electrical availability. Evaluate the results of the licensee's safety assessments of those time periods, and verify the licensee's safety assessments encompassed all the SSCs that have significant impact on public health and safety. If the licensee had not kept records of prior assessment results, * * * consider performing independent assessments of current maintenance activities.

IP 62709, 02.03 *Risk Management*: Determine if a licensee is using a reasonable approach to manage risk of the planned configurations when SSCs are removed from service for surveillance or maintenance activities. On the basis of licensee's safety assessments of those selected maintenance configurations, either during power operation or shutdown conditions, verify that the licensee has process controls in place that ensure risk management actions would be implemented for plant maintenance configurations with risk increases that exceed risk management thresholds.''

[FR Doc. 02–19538 Filed 8–1–02; 8:45 am]

BILLING CODE 7590–01–P

RAILROAD RETIREMENT BOARD

Proposed Collection; Comment Request

SUMMARY: In accordance with the requirement of Section 3506(c)(2)(A) of the Paperwork Reduction Act of 1995 which provides opportunity for public comment on new or revised data collections, the Railroad Retirement Board (RRB) will publish periodic summaries of proposed data collections.

Comments are invited on: (a) Whether the proposed information collection is necessary for the proper performance of the functions of the agency, including whether the information has practical utility; (b) the accuracy of the RRB's estimate of the burden of the collection of the information; (c) ways to enhance the quality, utility, and clarity of the information to be collected; and (d) ways to minimize the burden related to the collection of information on respondents, including the use of automated collection techniques or other forms of information technology.

Title and Purpose of information collection: Request for Review of part B Medicare Claim; OMB 3220–0100. Under section 7(d) of the Railroad Retirement Act (RRA), the RRB administers the Medicare program for persons covered by the railroad retirement system.

The RRB utilizes Forms G–790 and G–791 to provide railroad retirement beneficiaries who are claimants for part B Medicare benefits with the means for requesting Palmetto GBA, the RRB's current Medicare carrier, to review claims determinations or to hold hearings on the review determinations. Completion is required to obtain a benefit. One response is requested of each respondent.

The RRB proposes non-burden impacting, editorial and formatting changes to G–790 and G–791 for clarification purposes. The carrier's name and address have been changed to reflect the new part B carrier. The RRB has deleted to reference to OMB from the Paperwork Reduction Act/Privacy Act notice as instructed by OMB staff. The completion time both the G–790 and G–791 is estimated at 15 minutes.

FOR FURTHER INFORMATION CONTACT: To request more information or to obtain a

copy of the information collection justification, forms, and/or supporting material, please call the RRB Clearance Officer at (312) 751–3363. Comments regarding the information collection should be addressed to Ronald J. Hodapp, Railroad Retirement Board, 844 N. Rust Street, Chicago, Illinois 60611–2092. Written comments should be received within 60 days of this notice.

Chuck Mierzwa,

Clearance Officer.

[FR Doc. 02–19504 Filed 8–1–02; 8:45 am]

BILLING CODE 7905–01–M

SECURITIES AND EXCHANGE COMMISSION

Proposed Collection; Comment Request

Upon Written Request, Copies Available From: Securities and Exchange Commission, Office of Filings and Information Services, Washington, DC 20549

Extension:

Rule 10b–17, SEC File No. 270–427, OMB Control No. 3235–0476

Notice is hereby given that pursuant to the Paperwork Reduction Act of 1995 (44 USC 3501 et seq.) the Securities and Exchange Commission (''Commission'') is soliciting comments on the collection of information summarized below. The Commission plans to submit this existing collection of information to the Office of Management and Budget for extension and approval.

• Rule 10b–17, Untimely announcements of record dates (17 CFR 240.10b–17)

Rule 10b–17 requires any issuer of a class of securities publicly traded by the use of any means or instrumentality of interstate commerce or of the mails or of any facility of any national securities exchange to give notice of the following actions relating to such class of securities: (1) A dividend; (2) a stock split; or (3) a rights or other subscription offering. Notice shall be (1) given to the National Association of Securities Dealers, Inc.; (2) in accordance with the procedures of the national securities exchange upon which the securities are registered; or (3) may be waived by the Commission.

The information required by Rule 10b–17 is necessary for the execution of the Commission's mandate under the Exchange Act to prevent fraudulent, manipulative, and deceptive acts and practices by broker-dealers. The consequence of not requiring the information collection pursuant to Rule 10b–17 is that sellers who have received distributions as recordholders may dispose of the cash or stock dividends or other rights received as recordholders without knowledge of possible claims of purchasers.

It is estimated that, on an annual basis, there are approximately 29,430 respondents and that each response takes about 10 minutes to complete, thus imposing approximately 4,905 burden hours annually (29,430 x 10 minutes). We believe that the average hourly cost to produce and file a response under the rule is about $50. Therefore, the annual reporting cost burden for complying with this rule is about $245,250 (4,905 x $50).

An agency may not conduct or sponsor, and a person is not required to respond to, a collection of information unless it displays a currently valid control number. Written comments are invited on: (a) Whether the proposed collection of information is necessary for the proper performance of the functions of the agency, including whether the information will have practical utility; (b) the accuracy of the agency's estimate of the burden of the collection of information; (c) ways to enhance the quality, utility, and clarity of the information collected; and (d) ways to minimize the burden of the collection of information on respondents, including through the use of automated collection techniques or other forms of information technology. Consideration will be given to comments and suggestions submitted in writing within 60 days of this publication.

Please direct your written comments to Michael E. Bartell, Associate Executive Director, Office of Information Technology, Securities and Exchange Commission, 450 5th Street, NW., Washington, DC 20549.

Dated: July 26, 2002.

Margaret H. McFarland,

Deputy Secretary.

[FR Doc. 02–19531 Filed 8–1–02; 8:45 am]

BILLING CODE 8010–01–P

SECURITIES AND EXCHANGE COMMISSION

Proposed Collection; Comment Request

Upon Written Request, Copies Available From: Securities and Exchange Commission, Office of Filings and Information Services, Washington, DC 20549

Extension:

Regulations 13D and 13G; Schedules 13D and 13G, SEC File No. 270–137, OMB Control No. 3235–0145 and

Form F–6 SEC File No. 270–270, OMB Control No. 3235–0292

Notice is hereby given that, pursuant to the Paperwork Reduction Act of 1995 (44 USC 3501 *et seq.*), the Securities and Exchange Commission (''Commission'') is soliciting comments on the collections of information summarized below. The Commission plans to submit these existing collections of information to the office of Management and Budget for extension and approval.

Schedules 13D and 13G are filed pursuant to sections 13(d) and 13(g) of the Securities Exchange Act and Regulations 13D and 13G thereunder to report beneficial ownership of equity securities registered under section 12 of the Exchange Act. Regulations 13D and 13G are intended to provide investors and subject issuers with information about accumulations of securities that may have the potential to change or influence control of the issuer. Schedules 13D and 13G are used by persons including small entities to report their ownership of more than 5% of a class of equity securities registered under section 12. Schedule 13D takes approximately 43,500 total burden hours and is filed by 3,000 respondents. The filer prepares 25% of the 43,500 annual burden hours for a total reporting burden of 10,875 hours. Schedule 13G takes approximately 98,800 total burden hours and is filed by 9,500 respondents. The filer prepares 25% of the 98,800 annual burden hours for a total reporting burden of 24,700 hours. Therefore, the reporting burden for both Schedules is 35,575 hours and they are prepared by a total of 12,500 respondents.

The Commission under section 19 of the Securities Act of 1933 established Form F–6 for registration of American Depositary Receipts (ADRs) of foreign companies. Form F–6 requires disclosure of information regarding the terms of depository bank, fees charged, and a description of the ADRs. No special information regarding the foreign company is required to be prepared or disclosed, although the foreign company must be one, which periodically furnishes information to the Commission. Such information is available to the public for inspection. The information is needed to ensure that investors in ADRs have full disclosure of information concerning the deposit agreement and foreign company. Approximately 150 respondents file Form F–6 and it takes .9 hours to prepare for a total of 135 annual burden hours. It is estimated that 25% of the 135 total burden hours

(33.75 hours) is prepared by the company. The information provided on Form F–6 is mandatory to best ensure full disclosure of ADRs being issued in the U.S. All information provided to the Commission is available for public review upon request.

Written comments are invited on: (a) Whether these proposed collections of information are necessary for the proper performance of the functions of the agency, including whether the information will have practical utility; (b) the accuracy of the agency's estimate of burden of the collection of information; (c) ways to enhance the quality, utility, and clarity of the information collected; and (d) ways to minimize the burden of the collection of information on respondents, including through the use of automated collection techniques or other forms of information technology. Consideration will be given to comments and suggestions submitted in writing within 60 days of this publication.

Please direct your written comments to Michael E. Bartell, Associate Executive Director, Office of Information Technology, Securities and Exchange Commission, 450 5th Street, NW., Washington DC. 20549.

Dated: July 24, 2002.

Margaret H. McFarland,

Deputy Secretary.

[FR Doc. 02–19532 Filed 8–1–02; 8:45 am]

BILLING CODE 8010–01–P

SECURITIES AND EXCHANGE COMMISSION

[Investment Company Act Release No. 25688; 812–12574]

Fremont Mutual Funds, Inc. and Fremont Investment Advisors, Inc.; Notice of Application

July 29, 2002.

AGENCY: Securities and Exchange Commission (''Commission'').

ACTION: Notice of an application for an order under sections 6(c), 12(d)(1)(J), and 17(b) of the Investment Company Act of 1940 (the ''Act'') for exemptions from sections 12(d)(1)(A) and (B) and 17(a) of the Act, and under section 17(d) of the Act and rule 17d–1 under the Act to permit certain joint transactions.

Summary of the Application: The requested order would permit certain registered management investment companies to invest uninvested cash and cash collateral in affiliated money market funds in excess of the limits in sections 12(d)(1)(A) and (B) of the Act.

Applicants: Fremont Mutual Funds, Inc. (the ''Company''), all existing and future registered management investment companies for which Fremont Investment Advisors, Inc. (''Fremont'') or any entity controlling, controlled by, or under common control with Fremont (together with Fremont, the ''Adviser''), serves as an investment adviser (all such registered investment companies and their series together with the existing and future series of the Company, collectively, the ''Funds'') and the Adviser.

Filing Dates: The application was filed on July 13, 2001 and amended on April 25, 2002 and July 19, 2002.

Hearing or Notification of Hearing: An order granting the requested relief will be issued unless the Commission orders a hearing. Interested persons may request a hearing by writing to the Commission's Secretary and serving applicants with a copy of the request, personally or by mail. Hearing requests should be received by the Commission by 5:30 p.m. on August 23, 2002, and should be accompanied by proof of service on applicants, in the form of an affidavit or, for lawyers, a certificate of service. Hearing requests should state the nature of the writer's interest, the reason for the request, and the issues contested. Persons who wish to be notified of a hearing may request notification by writing to the Commission's Secretary.

ADDRESSES: Secretary, Commission, 450 Fifth Street, NW, Washington, DC, 20549–0609. Applicants, c/o Wendell M. Faria, *Esq.*, Paul, Hastings, Janofsky and Walker, LLP, 1299 Pennsylvania Avenue, NW, 10th Floor, Washington, DC, 20004–2400.

FOR FURTHER INFORMATION CONTACT: Emerson S. Davis, Sr., Senior Counsel, at (202) 942–0714, or Nadya B. Roytblat, Assistant Director, at (202) 942–0564 (Division of Investment Management, Office of Investment Company Regulation).

SUPPLEMENTARY INFORMATION: The following is a summary of the application. The complete application may be obtained for a fee at the Commission's Public Reference Branch, 450 Fifth Street, NW., Washington, DC, 20549–0102 (tel. 202–942–8090).

Applicants' Representations

1. The Company, a Maryland corporation, is registered under the Act as an open-end management investment company. The Company currently offers twelve Funds, including the Fremont Money Market Fund. The Fremont Money Market Fund and any future money market Fund that holds itself out a money market fund and is subject to the requirements of rule 2a–7 under the Act are referred to as the ''Money Market Funds.''[1] Fremont, a Delaware corporation, is registered as an investment adviser under the Investment Advisers Act of 1940 (''Advisers Act'') and serves as investment adviser to the Company.

2. Applicants state that each Fund has, or may have, uninvested cash in an account held by a custodian (''Uninvested Cash''). Uninvested Cash may result from a variety of sources, including dividends or interest received on portfolio securities, unsettled securities transactions, strategic reserves, matured investments, liquidation proceeds of investment securities, or new monies received from investors. The Funds also may participate in a securities lending program under which a Fund may lend its portfolio securities to registered broker-dealers or other institutional investors (''Securities Lending Arrangements''). The loans are continuously secured by collateral equal at all times to at least the market value of the securities loaned. Collateral for these loans may include cash (''Cash Collateral'' and together with Uninvested Cash, ''Cash Balances'').

3. Applicants request an order to permit certain Funds (''Investing Funds'') to invest their Cash Balances in shares of one or more of the Money Market Funds, the Money Market Funds to sell their shares to, and redeem their shares from, the Investing Funds and the Adviser to effect such purchases and sales. Investment of Cash Balances in shares of the Money Market Funds will be made only to the extent that such investments are consistent with each Investing Fund's investment restrictions and policies as set forth in its prospectus and statement of additional information. Applicants believe that the proposed transactions may reduce transaction costs, create more liquidity, increase returns, and further diversify holdings.

Applicants' Legal Analysis

1. Section 12(d)(1)(A) of the Act provides, in pertinent part, that no registered investment company may acquire securities of another investment company if such securities represent more than 3% of the acquired company's outstanding voting stock, more than 5% of the acquiring company's total assets, or if such securities, together with the securities of other acquired investment companies,

[1] All Funds that currently intend to rely on the requested relief are named as applicants. Any other Funds that may rely on the relief in the future will do so only in accordance with the terms and conditions of the application.

represent more than 10% of the acquiring company's total assets. Section 12(d)(1)(B) of the Act, in pertinent part, provides that no registered open-end investment company may sell its securities to another investment company if the sale will cause the acquiring company to own more than 3% of the acquired company's voting stock, or if the sale will cause more than 10% of the acquired company's voting stock to be owned by investment companies.

2. Section 12(d)(1)(J) of the Act authorizes the Commission to exempt any person, security, or transaction from any provision of section 12(d)(1) if, and to the extent that, such exemption is consistent with the public interest and the protection of investors. Applicants request relief under section 12(d)(1)(J) from the limitations of sections 12(d)(1)(A) and (B) to permit the Investing Funds to invest Cash Balances in Money Market Funds.

3. Applicants state that the proposed arrangement would not result in the abuses that sections 12(d)(1)(A) and (B) were intended to prevent. Applicants state that because each Money Market Fund will maintain a highly liquid portfolio, an Investing Fund will not be in a position to gain undue influence over a Money Market Fund through threat of redemption. Applicants represent that the proposed arrangement will not result in an inappropriate layering of fees because shares of the Money Market Funds sold to the Investing Funds will not be subject to a sales load, redemption fee, distribution fee under a plan adopted in accordance with rule 12b–1 under the Act, or service fee (as defined in rule 2830(b)(9) of the National Association of Securities Dealers' (''NASD'') Conduct Rules), or, if such shares are subject to a sales load, redemption fee, distribution fee or service fee, the Adviser will waive its advisory fee for each Investing Fund in an amount that offsets the amount of such fees incurred by the Investing Fund. Applicants state that if a Money Market Fund offers more than one class of shares, each Investing Fund will invest Cash Balances only in the class with the lowest expense ratio at the time of the investment. In connection with approving any advisory contract for an Investing Fund, the board of directors of the Company (the ''Board''), including a majority of the directors who are not ''interested persons,'' as defined in section 2(a)(19) of the Act (''Independent Directors''), will consider to what extent, if any, the advisory fees charged to the Investing Fund by the Adviser should be reduced to account for reduced services provided to the Investing Fund by the Adviser as a result of the investment of Uninvested Cash in a Money Market Fund. In this regard, the Adviser will provide the Board with specific information regarding the approximate cost to the Adviser of, or portion of the advisory fee under the existing advisory contract attributable to, managing the Uninvested Cash of the Investing Fund that can be expected to be invested in the Money Market Funds. Applicants represent that a Money Market Fund will not acquire securities of any other investment company in excess of the limitations contained in section 12(d)(1)(A) of the Act.

4. Section 17(a) of the Act makes it unlawful for any affiliated person of a registered investment company, or an affiliated person of such person, acting as principal, to sell or purchase any security to or from the company. Section 2(a)(3) of the Act defines an ''affiliated person'' of an investment company to include, among others, any person directly or indirectly controlling, controlled by, or under common control with the other person and any person owning, controlling, or holding with power to vote, 5% or more of the other person. Applicants state that, because the Funds share a common investment adviser, each Fund may be deemed to be under common control with each of the other Funds, and thus an affiliated person of each of the other Funds. Applicants state that the Adviser and its affiliates may hold of record 5% or more outstanding shares of certain Funds and such Funds may be deemed affiliated persons of each other. As a result, section 17(a) would prohibit the sale of the shares of a Money Market Fund to the Investing Funds, and the redemption of such shares by the Money Market Funds.

5. Section 17(b) of the Act authorizes the Commission to exempt a transaction from section 17(a) if the terms of the proposed transaction, including the consideration to be paid or received, are reasonable and fair and do not involve overreaching on the part of any person concerned, the proposed transaction is consistent with the policy of each investment company concerned, and the proposed transaction is consistent with the general purposes of the Act. Section 6(c) of the Act permits the Commission to exempt persons or transactions from any provision of the Act if the exemption is necessary or appropriate in the public interest and consistent with the protection of investors and the purposes fairly intended by the policy and provisions of the Act.

6. Applicants submit that their request for relief to permit the purchase and redemption of shares of a Money Market Fund by the Investing Funds satisfies the standards in sections 6(c) and 17(b) of the Act. Applicants note that shares of the Money Market Funds will be purchased and redeemed at their net asset value, the same consideration paid and received for these shares by any other shareholder. Applicants state that the Investing Funds will retain their ability to invest Cash Balances directly in money market instruments as authorized by their respective investment objectives and policies if they believe they can obtain a higher rate of return, or for any other reason. Applicants also state that each Money Market Fund reserves the right to discontinue selling shares to any of the Investing Funds if the board of directors of the Money Market Fund determines that such sales would adversely affect the Money Market Fund's portfolio management and operations.

7. Section 17(d) of the Act and rule 17d–1 under the Act prohibit an affiliated person of an investment company, acting as principal, from participating in or effecting any transaction in connection with any joint enterprise or joint arrangement in which the investment company participates. Applicants state that each Investing Fund, by purchasing shares of the Money Market Funds, each Money Market Fund, by selling shares to the Investing Funds, and the Adviser, by effecting the proposed transactions, could be deemed to be participants in a joint enterprise or arrangement within the meaning of section 17(d) of the Act and rule 17d–1 under the Act.

8. Rule 17d–1 permits the Commission to approve a proposed joint transaction covered by the terms of section 17(d) of the Act. In determining whether to approve a transaction, the Commission will consider whether the proposed transaction is consistent with the provisions, policies, and purposes of the Act, and the extent to which the participation is on a basis different from or less advantageous than that of other participants. Applicants submit that the investment by the Investing Funds in shares of a Money Market Fund would be on the same basis and would be indistinguishable from any other shareholder account maintained by the Money Market Fund and that the transactions will be consistent with the Act.

Applicants' Conditions

Applicants agree that any order granting the requested relief will be subject to the following conditions:

1. Shares of a Money Market Fund sold to and redeemed by the Investing

Funds will not be subject to a sales load, redemption fee, distribution fee under a plan adopted in accordance with rule 12b–1 under the Act or service fee (as defined in rule 2830(b)(9) of the NASD's Conduct Rules), or if such shares are subject to any such fee, the Adviser will waive its advisory fee for each Investing Fund in an amount that offsets the amount of such fees incurred by the Investing Fund.

2. Before relying on the order, an Investing Fund will hold a meeting of the Board for the purpose of voting on the advisory contract under section 15 of the Act. Before approving any advisory contract for an Investing Fund, the Board, including a majority of the Independent Directors, taking into account all relevant factors, shall consider to what extent, if any, the advisory fees charged to the Investing Fund by Adviser should be reduced to account for reduced services provided to the Investing Fund by the Adviser as a result of the Uninvested Cash being invested in the Money Market Funds. In connection with this consideration, the Adviser will provide the Board with specific information regarding the approximate cost to the Adviser of, or portion of the advisory fee under the existing advisory contract attributable to, managing the Uninvested Cash of an Investing Fund that can be expected to be invested in the Money Market Funds. The minute books of the Investing Fund will record fully the Board's considerations in approving the advisory contract, including the consideration relating to fees referred to above.

3. Each Investing Fund will invest Uninvested Cash in, and hold shares of, the Money Market Funds only to the extent that the Investing Fund's aggregate investment of Uninvested Cash in the Money Market Funds does not exceed 25 percent of the Investing Fund's total assets. For purposes of this limitation, each Investing Fund will be treated as a separate investment company.

4. Investment of Cash Balances in shares of the Money Market Funds will be in accordance with each Investing Fund's respective investment restrictions, if any, and will be consistent with each Investing Fund's policies as set forth in its prospectus and statement of additional information.

5. Each Investing Fund and Money Market Fund that may rely on the order shall be shall be advised or, provided the Adviser manages Cash Balances, sub-advised by the Adviser.

6. No Money Market Fund whose shares are held by an Investing Fund shall acquire securities of any investment company in excess of the limits contained in section 12(d)(1)(A) of the Act.

7. Before a Fund may participate in Securities Lending Arrangements, a majority of the Board, including a majority of the Independent Directors, will approve the Fund's participation in Securities Lending Arrangements. The Board also will evaluate the Securities Lending Arrangements and their results no less frequently than annually and determine that any investment of Cash Collateral in the Money Market Funds is in the best interest of the shareholders of the Fund.

For the Commission, by the Division of Investment Management, pursuant to delegated authority.

Margaret H. McFarland,

Deputy Secretary.

[FR Doc. 02–19506 Filed 8–1–02; 8:45 am]

BILLING CODE 8010–01–P

SECURITIES AND EXCHANGE COMMISSION

[Rel. No. IC–25687; File No. 812–12516]

The Phoenix Edge Series Fund, et al.

July 26, 2002.

AGENCY: The Securities and Exchange Commission (''SEC'' or ''Commission'').

ACTION: Notice of application for an order of exemption under Section 6(c) of the Investment Company Act of 1940, as amended (the ''1940 Act'') from the provisions of Sections 9(a), 13(a), 15(a), and 15(b) of the 1940 Act and Rules 6e-2(b)(15) and 6e-3(T)(b)(15) thereunder.

Summary of Application: Applicants seek an order to permit shares of the Phoenix Edge Series Fund (''Phoenix Fund'') or any other existing or future investment company that is designed to fund insurance products and for which the Advisors (as defined below) or any of their affiliates may serve as investment manager, investment advisor, sub-advisor, administrator, manager, principal underwriter or sponsor (the Phoenix Fund and such other investment companies being herein referred to, collectively, as the ''Fund''), or any current or future series of any Fund (a ''Portfolio'') to be sold to and held by: (1) Separate accounts funding variable annuity and variable life insurance contracts issued by both affiliated and unaffiliated life insurance companies (''Separate Accounts''); and (2) qualified pension and retirement plans outside of the separate account context (''Qualified Plans'' or ''Plans'').

Applicants: The Phoenix Fund, Phoenix Investment Counsel, Inc. (''PIC''), Phoenix-Aberdeen International Advisors, LLC (''PAIA''), Duff & Phelps Investment Management Co. (''DPIM'') and Phoenix Variable Advisors, Inc. (''PVA'') (collectively, ''Applicants'').

Filing Date: The application was filed on May 17, 2001 and amended and restated on April 17, 2002.

Hearing Or Notification Of Hearing: An order granting the application will be issued unless the Commission orders a hearing. Interested persons may request a hearing on the application by writing to the Secretary of the Commission and serving Applicants with a copy of the request, personally or by mail. Hearing requests must be received by the Commission by 5:30 p.m. on August 19, 2002 and should be accompanied by proof of service on Applicants, in the form of an affidavit or, for lawyers, a certificate of service. Hearing requests should state the nature of writer's interest, the reason for the request, and the issues contested. Persons may request notification of the date of the hearing by writing to the Commission's Secretary.

ADDRESSES: Secretary, Securities and Exchange Commission, 450 Fifth Street, NW., Washington, DC 20549–0690. Applicants, c/o Ruth S. Epstein, Esq., Dechert, 1775 Eye Street, NW., Washington, DC 20006–2401.

FOR FURTHER INFORMATION CONTACT: Harry Eisenstein, Senior Counsel, or Zandra Y. Bailes, Branch Chief, Office of Insurance Products, Division of Investment Management at (202) 942–0670.

SUPPLEMENTARY INFORMATION: The following is a summary of the application. The complete application is available for a fee from the SEC's Public Reference Branch, 450 Fifth Street, NW., Washington, DC 20549–0102 (tel. 202–942–8090).

Applicants' Representations

1. The Phoenix Fund is a no-load, open-end, management investment company registered under the 1940 Act. The Phoenix Fund is organized as a Massachusetts business trust established pursuant to an Agreement and Declaration of Trust dated February 18, 1986. The Phoenix Fund is comprised of twenty-seven separate Portfolios, each of which has its own investment objectives and policies. Additional Portfolios may be added in the future.

2. Shares of the Phoenix Fund are currently offered to the Separate Accounts of Phoenix Home Life Mutual Insurance Company (''Phoenix''), PHL Variable Insurance Company (''PHL Variable''), and Phoenix Life and

Annuity Company (''PLAC''), which fund benefits under variable annuity and variable life insurance contracts issued by those companies. Shares of the Phoenix Fund are not sold directly to the public.

3. Phoenix Equity Planning Corporation (''PEPCO'') is registered as a broker-dealer under the Securities Exchange Act of 1934, as amended, and is a member of the National Association of Securities Dealers, Inc. PEPCO performs bookkeeping, pricing and administrative services for the Phoenix Fund. PEPCO also serves as principal underwriter for certain variable annuity and life insurance contracts. PEPCO is a subsidiary of Phoenix Investment Partners, Ltd. (''PXP''). PXP and PEPCO are each a subsidiary of the Phoenix Companies, Inc.

4. PIC, PAIA, DPIM and PVA (each an ''Advisor'' and collectively, ''Advisors'') serve as the Phoenix Fund's investment advisors. Each is registered as an investment advisor under the Investment Advisers Act of 1940, as amended. PVA is a subsidiary of Phoenix. All of the outstanding stock of PIC is owned by PEPCO. PAIA is a joint venture jointly owned and managed by PM Holdings, Inc., a subsidiary of Phoenix, and Aberdeen Fund Managers, Inc., a subsidiary of Aberdeen Asset Management PLC. DPIM is a subsidiary of Phoenix.

5. The Fund intends to offer shares of the Portfolios to Separate Accounts of both affiliated and unaffiliated life insurance companies (''Participating Insurance Companies'') to serve as investment vehicles for various types of insurance products. These products may include, but are not limited to, variable annuity contracts, single premium variable life insurance contracts, scheduled premium variable life insurance contracts, modified single premium variable life insurance policies, and flexible premium variable life insurance contracts (collectively referred to herein as ''variable contracts'' or ''contracts'').[1] Participating Insurance Companies will be those insurance companies that purchase shares of the Fund for such purposes.

6. The Participating Insurance Companies will establish their own Separate Accounts and design their own variable contracts. Each Participating Insurance Company will have the legal obligation of satisfying all requirements applicable to such insurance company under both federal and state law. It is anticipated that Participating Insurance Companies, including Phoenix, PHL Variable, and PLAC, will rely on Rule 6e–2 or Rule 6e–3(T) under the 1940 Act, in connection with variable life insurance contracts, although some Participating Insurance Companies may rely on individual exemptive orders as well. The role of the Fund, so far as the federal securities laws are applicable, will be limited to that of offering its shares, as described below, to Separate Accounts of various insurance companies and to Qualified Plans, and fulfilling any conditions the Commission may impose upon granting the order requested in the application.

7. Each Participating Insurance Company will enter into a participation agreement with the applicable Fund on behalf of the Portfolios in which the Participating Insurance Company invests. The Separate Accounts of the Participating Insurance Companies will invest in shares of the Fund in accordance with allocation instructions received from contract owners.

8. The Fund intends to offer shares of the Portfolios directly to Qualified Plans outside of the separate account context. Qualified Plans may choose a Portfolio as the sole investment under the Qualified Plan or as one of several investments. Qualified Plan participants may or may not be given an investment choice depending on the Qualified Plan itself. Fund shares sold to such Qualified Plans would be held by the trustee(s) of said Qualified Plans as mandated by Section 403(a) of the Employee Retirement Income Security Act (''ERISA''). Certain Qualified Plans, including those described in Sections 403(b)(7) and 408(a) of the Internal Revenue Code of 1986, as amended (''Code''), may vest voting rights in Plan participants instead of Plan trustees. [2] Exercise of voting rights by participants in any such Qualified Plans, as opposed to the trustees of such Plans, cannot be mandated by Applicants. Each Plan must be administered in accordance with the terms of the Plan and as determined by its trustee or trustees.

Applicants' Legal Analysis

1. In connection with the funding of scheduled premium variable life insurance contracts issued through a separate account registered under the 1940 Act as a unit investment trust, Rule 6e–2(b)(15) provides partial exemptions from Sections 9(a), 13(a), 15(a), and 15(b).[3] Section 9(a) provides that it is unlawful for any company to serve as an investment advisor or principal underwriter of any registered open-end investment company if an affiliated person of that company is subject to a disqualification enumerated in Sections 9(a)(1) or (2). Rule 6e–2(b)(15)(i) and (ii) provides a partial exemption from Section 9(a) to the extent that such section would render a company ineligible to serve as investment advisor or principal underwriter of any registered open end management investment company, where an officer, director, employee or affiliated person of such company is subject to a disqualification enumerated in Section 9(a), but the individual subject to such disqualification does not participate directly in the management or administration of the underlying registered management investment company. Rule 6e–2(b)(15)(iii) provides a partial exemption from Sections 13(a), 15(a), and 15(b) to the extent those sections have been deemed by the Commission to require ''pass-through'' voting with respect to an underlying fund's shares. The exemptions granted to a separate account by Rule 6e–2(b)(15) are available only where all of the assets of the separate account consist of the shares of one or more registered management investment companies which offer their shares ''exclusively to variable life insurance separate accounts of the life insurer or of any affiliated life insurance company.'' Therefore, the relief granted by Rule 6e–2(b)(15) is not available with respect to a variable life insurance separate account that owns shares of a management company that also offers its shares to a variable annuity separate account of the same insurance company or any other insurance company. The use of a common underlying fund as the underlying investment medium for both variable annuity and variable life insurance separate accounts of the same life insurance company or of any affiliated life insurance company is referred to herein as ''mixed funding.''

2. In addition, the relief granted by Rule 6e–2(b)(15) is not available with respect to a scheduled premium variable life insurance separate account that owns shares of an underlying management company that also offers

[1] Some Separate Accounts to which the Fund may offer its Portfolio shares may be exempt from registration under the 1940 Act pursuant to Sections 3(c)(1) or 3(c)(7) thereof.

[2] Qualified Plans described in Sections 403(b)(7) and 408(a) of the Code may invest in mutual funds through custodial arrangements. Such custodial arrangements typically provide that shares held of record by the custodian are held for the benefit of the participant that beneficially owns such shares. Because of the limited role of custodians of those Plans, Applicants intend to treat each participant in those Plans as a separate Qualified Plan for purposes of the Application.

[3] The exemptions provided by Rule 6e-2 also are available to a separate account's investment advisor, principal underwriter, and sponsor or depositor.

its shares to separate accounts funding variable contracts of one or more unaffiliated life insurance companies. The use of a common underlying fund as the underlying investment medium for variable life insurance separate accounts of one insurance company and separate accounts funding variable contracts of one or more unaffiliated life insurance companies is referred to herein as ''shared funding.''

3. Moreover, because the relief under Rule 6e–2(b)(15) is available only where shares are offered exclusively to variable life insurance separate accounts, additional exemptive relief may be necessary if the shares of the Fund are also to be sold to Qualified Plans.

4. Accordingly, Applicants are requesting an order of the Commission granting exemptions from Sections 9(a), 13(a), 15(a), and 15(b) of the 1940 Act, and Rule 6e–2(b)(15) thereunder, to the extent necessary to permit shares of each Fund to be offered and sold to, and held by: (a) Separate Accounts funding variable annuity contracts and scheduled premium and flexible premium variable life insurance contracts issued by both affiliated and unaffiliated life insurance companies; and (b) Qualified Plans.

5. In connection with the funding of flexible premium variable life insurance contracts issued through a separate account registered under the 1940 Act as a unit investment trust, Rule 6e–3(T)(b)(15) provides partial exemptions from Sections 9(a), 13(a), 15(a), and 15(b). The exemptions granted to a separate account by Rule 6e–3(T)(b)(15) are available only where all of the assets of the separate account consist of the shares of one or more registered management investment companies which offer their shares ''exclusively to separate accounts of the life insurer, or of any affiliated life insurance company offering either scheduled contracts or flexible contracts, or both; or which also offer their shares to variable annuity separate accounts of the life insurer or of an affiliated life insurance company.'' Therefore, Rule 6e–3(T) permits mixed funding with respect to a flexible premium variable life insurance separate account, subject to certain conditions.[4] However, Rule 6e–3(T) does not permit shared funding because the relief granted by Rule 6e–3(T)(b)(15) is not available with respect to a flexible premium variable life insurance separate account that owns shares of an underlying fund that also offers its shares to separate accounts (including variable annuity and flexible premium and scheduled premium variable life insurance separate accounts) of unaffiliated life insurance companies.

6. Applicants state that the relief provided by Rule 6e–3(T) is not relevant to the purchase of shares of the Fund by Qualified Plans. However, because the relief granted by Rule 6e–3(T)(b)(15) is available only where shares of the underlying fund are offered exclusively to separate accounts, or to life insurers in connection with the operation of a separate account, additional exemptive relief may be necessary if the shares of the Fund are also to be sold to Qualified Plans.

7. Accordingly, Applicants are requesting an order of the Commission granting exemptions from Sections 9(a), 13(a), 15(a), and 15(b) of the 1940 Act, and Rule 6e–3(T)(b)(15) (and any comparable permanent rule) thereunder, to the extent necessary to permit shares of each Portfolio to be offered and sold to, and held by: (a) Separate Accounts funding variable annuity contracts and scheduled premium and flexible premium variable life insurance contracts issued by unaffiliated life insurance companies; and (b) Qualified Plans.

8. In its most recent release adopting amendments to Rule 6e–3(T), the Commission stated that shared funding arrangements presented ''a very new and somewhat complicated area from a regulatory perspective'' (Investment Company Act Release No. 15651 (March 30, 1987)). In the context of mixed funding, the Commission noted in this same Release that ''it would prefer to see any evolvement in this area * * * take place in the context of the application process.''

9. Applicants state they believe that the reason the Commission did not grant greater relief in the area of mixed and shared funding when it adopted Rule 6e–3(T) is because of the Commission's uncertainty in this area with respect to such issues as conflicts of interest. Applicants believe that any Commission concern in this area is not warranted in the context of the application. If and when a material irreconcilable conflict between the Separate Accounts arises in this context or between Separate Accounts on the one hand and Qualified Plans on the other hand, the Participating Insurance Companies and Qualified Plans must take whatever steps are necessary to remedy or eliminate the conflict, including eliminating the Portfolios as eligible investment options. Applicants state they have concluded that the inclusion of Qualified Plans as eligible shareholders should not increase the risk of material irreconcilable conflicts among shareholders. However, Applicants further assert that even if a material irreconcilable conflict involving the Qualified Plans arose, the Qualified Plans, unlike the Separate Accounts (which are subject to Section 26(c) of the 1940 Act with respect to substitutions), can simply redeem their shares and make alternative investments. Applicants argue that allowing Qualified Plans to invest directly in the Fund should not increase the opportunity for conflicts of interest.

10. Applicants state that the Commission has previously granted exemptive orders permitting open-end management investment companies to offer their shares directly to Qualified Plans as well as to separate accounts of affiliated or unaffiliated insurance companies that issue variable annuity contracts and variable life insurance contracts.

11. Applicants request relief under Section 6(c) of the 1940 Act for the class consisting of the Fund and the Portfolios; life insurance companies (*i.e.,* Participating Insurance Companies) and their Separate Accounts that invest or in the future will invest in the Fund and the Portfolios; and, to the extent necessary, investment managers, investment advisors, sub-advisors, administrators, managers, principal underwriters or sponsors of Separate Accounts that currently invest or in the future will invest in the Fund and the Portfolios. Applicants assert that there is ample precedent, in a variety of contexts, for granting exemptive relief not only to Applicants in a given case, but also to members of the class not currently identified that may be similarly situated in the future. In the context of mixed and shared funding, Applicants note that the Commission has previously granted exemptions covering a class composed of registered investment companies designed to fund variable contracts for which a named party to the exemptive application or, in some instances, an affiliate thereof, would serve in one or more of the following capacities: investment manager, investment advisor, sub-advisor, administrator, manager, principal underwriter or sponsor.

12. Section 6(c) of the 1940 Act authorizes the Commission to exempt any person, security, or transaction or any class or classes of persons, securities, or transactions from any provision or provisions of the 1940 Act and/or of any rule thereunder if and to the extent that such exemption is necessary or appropriate in the public interest and consistent with the

[4] The exemptions provided by Rule 6e–3(T) also are available to a separate account's investment advisor, principal underwriter, and sponsor or depositor.

protection of investors and the purposes fairly intended by the policy and provisions of the 1940 Act. For the reasons stated below, Applicants believe that the requested exemptions are appropriate in the public interest and consistent with the protection of investors and the purposes fairly intended by the policy and provisions of the 1940 Act.

13. Section 9(a) of the 1940 Act provides that it is unlawful for any company to serve as investment advisor or principal underwriter of any registered open-end investment company if an affiliated person of that company is subject to a disqualification enumerated in Sections 9(a)(1) or (2). Rules 6e–2(b)(15)(i) and (ii) and Rules 6e–3(T)(b)(15)(i) and (ii) provide exemptions from Section 9(a) under certain circumstances, subject to the limitations discussed above on mixed and shared funding imposed by the 1940 Act and the rules thereunder. These exemptions limit the application of the eligibility restrictions to affiliated individuals or companies that directly participate in the management of the underlying management company.

14. Applicants state that Rules 6e–2(b)(15)(i) and 6e–3(T)(b)(15)(i) provide, in effect, that the fact that an individual disqualified under Section 9(a)(1) or Section 9(a)(2) is an officer, director, or employee of an insurance company, or any of its affiliates, would not, by virtue of Section 9(a)(3), disqualify the insurance company or any of its affiliates from serving in any capacity with respect to an underlying investment company, provided that the disqualified individual did not participate directly in the management or administration of the underlying investment company.

15. Applicants state that Rules 6e–2(b)(15)(ii) and 6e–3(T)(b)(15)(ii) provide, in effect, that the fact that any company disqualified under Section 9(a)(1) or Section 9(a)(2) is affiliated with the insurance company would not, by virtue of Section 9(a)(3), disqualify the insurance company from serving in any capacity with respect to an underlying investment company, provided that the disqualified company did not participate directly in the management or administration of the investment company.

16. Applicants state that the partial relief granted in Rules 6e–2(b)(15) and 6e–3(T)(b)(15) from the requirements of Section 9, in effect, limits the amount of monitoring necessary to ensure compliance with Section 9 to that which is appropriate in light of the policy and purposes of Section 9. These Rules recognize that it is not necessary to apply the provisions of Section 9(a) to individuals in a large insurance company complex, most of whom will have no involvement in matters pertaining to investment companies in that organization. These Rules further recognize that it is also unnecessary to apply Section 9(a) to individuals in various unaffiliated insurance companies (or affiliated companies of Participating Insurance Companies) that may utilize the Fund as a funding medium for variable contracts.

17. Applicants believe that there is no regulatory purpose in extending the Section 9(a) monitoring requirements because of mixed or shared funding. The Participating Insurance Companies are not expected to play any role in the management or administration of the Fund. Those individuals who participate in the management or administration of the Fund will remain the same regardless of which Separate Accounts or insurance companies use the Fund. Applicants maintain that, therefore, applying the monitoring requirements of Section 9(a) because of investment by Separate Accounts of other insurers would be unjustified and would not serve any regulatory purpose. Applicants also state that, furthermore, the increased monitoring costs would reduce the net rates of return realized by contract owners and Plan participants.

18. Applicants submit that the relief requested herein from Section 9(a) in no way will be affected by the proposed additional use of the shares of the Fund in connection with Qualified Plans. The insulation of the Fund from those individuals who are disqualified under the 1940 Act remains in place. Since the Qualified Plans are not investment companies and will not be deemed to be affiliated solely by virtue of their shareholdings, no additional relief from Section 9(a), with respect to Qualified Plans, is necessary.

19. Rules 6e–2(b)(15)(iii) and 6e–3(T)(b)(15)(iii) provide exemptions from the pass-through voting requirement with respect to several significant matters, assuming the limitations discussed above on mixed and shared funding are observed. Rules 6e–2(b)(15)(iii)(A) and 6e–3(T)(b)(15)(iii)(A) provide that the insurance company may disregard the voting instructions of its contract owners with respect to the investments of an underlying fund, or any contract between a fund and its investment advisor, when required to do so by an insurance regulatory authority (subject to the provisions of paragraphs (b)(5)(i) and (b)(7)(ii)(A) of Rules 6e–2 and 6e–3(T)). Rules 6e–2(b)(15)(iii)(B) and 6e–3(T)(b)(15)(iii)(A) provide that, with respect to registered management investment companies whose shares are held by a separate account of an insurance company, the insurance company may disregard voting instructions of contract owners if the contract owners initiate any change in such investment company's investment policies, principal underwriter, or any investment advisor (provided that disregarding such voting instructions is reasonable and subject to the other provisions of paragraphs (b)(5)(ii), (b)(7)(ii)(B), and (b)(7)(ii)(C) of Rules 6e–2 and 6e–3(T)).

20. Applicants state that Rule 6e–2 recognizes that a variable life insurance contract, as an insurance contract, has important elements unique to insurance contracts and is subject to extensive state regulation of insurance. Applicants believe that, in adopting Rule 6e–2(b)(15)(iii), the Commission expressly recognized that state insurance regulators have authority, pursuant to state insurance laws or regulations, to disapprove or require changes in investment policies, investment advisors, or principal underwriters. The Commission also expressly has recognized that state insurance regulators have authority to require an insurer to draw from its general account to cover costs imposed upon the insurer by a change approved by contract owners over the insurer's objection. The Commission, therefore, deemed such exemptions necessary ''to assure the solvency of the life insurer and performance of its contractual obligations by enabling an insurance regulatory authority or the life insurer to act when certain proposals reasonably could be expected to increase the risks undertaken by the life insurer.'' [5] Applicants conclude that, in this respect, flexible premium variable life insurance contracts are identical to scheduled premium variable life insurance contracts. Therefore, the corresponding provisions of Rule 6e–3(T) (which apply to flexible premium insurance contracts and which permit mixed funding) undoubtedly were adopted in recognition of the same considerations as the Commission applied in adopting Rule 6e–2.

21. Applicants state that these considerations are no less important or necessary when an insurance company funds its separate accounts in connection with mixed and shared funding. Such mixed and shared funding does not compromise the goals of the insurance regulatory authorities or of the Commission. Applicants assert that, while the Commission may have

[5] Investment Company Act Release No. 9104 (Dec. 30, 1975) (proposing Rule 6e–2).

wished to reserve wide latitude with respect to the once unfamiliar variable annuity product, that product is now familiar and there appears to be no reason for the maintenance of prohibitions against mixed and shared funding arrangements. Applicants note that, by permitting such arrangements, the Commission eliminates needless duplication of start-up and administrative expenses and potentially increases an investment company's assets, thereby making effective portfolio management strategies that are easier to implement and promoting other economies of scale.

22. Applicants state that the Fund's sale of shares to Qualified Plans will not have any impact on the relief requested herein in this regard. Shares of the Fund sold to Qualified Plans would be held by the trustees of such Plans. With respect to the Qualified Plans, which are not registered as investment companies under the 1940 Act, Applicants state that there is no requirement to pass through voting rights to Plan participants. Indeed, to the contrary, applicable law expressly reserves voting rights associated with certain types of Plan assets to certain specified persons. For example, under Section 403(a) of ERISA, shares of a fund sold to a Qualified Plan must be held by the trustee(s) of the Plan. Section 403(a) also provides that the trustee(s) must have exclusive authority and discretion to manage and control the Plan with two exceptions: (a) When the Plan expressly provides that the trustee(s) are subject to the direction of a named fiduciary who is not a trustee, in which case the trustee(s) are subject to proper directions made in accordance with the terms of the Plan and not contrary to ERISA; and (b) when the authority to manage, acquire or dispose of assets of the Plan is delegated to one or more investment managers pursuant to Section 402(c)(3) of ERISA. Unless one of the above two exceptions stated in Section 403(a) applies, Plan trustee(s) have the exclusive authority and responsibility for voting proxies.

23. Applicants note that, if a named fiduciary to a Qualified Plan appoints an investment manager, the investment manager has the responsibility to vote the shares held unless the right to vote such shares is reserved to the trustees or the named fiduciary. Applicants further note that the Qualified Plans may have their trustee(s) or other fiduciaries exercise voting rights attributable to investment securities held by the Qualified Plans in their discretion. Certain Qualified Plans, however, may provide for the trustees(s) or another named fiduciary to exercise voting rights in accordance with instructions from participants.

24. If a Qualified Plan does not provide participants with the right to give voting instructions, Applicants do not see any potential for material irreconcilable conflicts of interest between or among variable contract owners and Plan participants with respect to voting of the respective Portfolio's shares. Accordingly, unlike the case with insurance company separate accounts, the issue of the resolution of material irreconcilable conflicts with respect to voting is not present with respect to such Qualified Plans because the Qualified Plans are not entitled to pass-through voting privileges.

25. Applicants further note that there is no reason to believe that participants in Qualified Plans that provide participants with the right to give voting instructions generally, or those in a particular Plan, either as a single group or in combination with participants in other Qualified Plans, would vote in a manner that would disadvantage variable contract owners. Applicants, therefore, assert that the purchase of shares of the Portfolios by Qualified Plans that provide voting rights does not present any complications not otherwise occasioned by mixed or shared funding.

26. Applicants submit that the prohibitions on mixed and shared funding might reflect concern regarding possible different investment motivations among investors. Applicants note that when Rule 6e–2 was adopted, variable annuity separate accounts could invest in mutual funds whose shares also were offered to the general public. At the time of the adoption of Rule 6e–2, therefore, the Commission staff contemplated underlying funds with public shareholders, as well as with variable life insurance separate account shareholders. Applicants state that the Commission staff may have been concerned with the potentially different investment motivations of public shareholders and variable life insurance contract owners. There also may have been some concern with respect to the problems of permitting a state insurance regulatory authority to affect the operations of a publicly available mutual fund and to affect the investment decisions of public shareholders.

27. Applicants state that, for reasons unrelated to the 1940 Act, however, Internal Revenue Service Revenue Ruling 81–225 (Sept. 25, 1981) effectively deprived variable annuities funded by publicly available mutual funds of their tax-benefited status. The Tax Reform Act of 1984 codified the prohibition against the use of publicly available mutual funds as an investment medium for variable contracts (including variable life contracts). Section 817(h) of the Code, in effect, requires that the investments made by variable annuity and variable life insurance separate accounts be ''adequately diversified.'' If a separate account is organized as a unit investment trust that invests in a single fund or series, then the separate account will not be diversified. Applicants note that in this situation, however, Section 817(h) of the Code and the regulations promulgated thereunder, in effect, provide that the diversification test will be applied at the underlying fund level, rather than at the separate account level, but only if ''all of the beneficial interests'' in the underlying fund ''are held by one or more insurance companies (or affiliated companies) in their general account or in segregated asset accounts * * *''[6] Applicants state that, accordingly, a unit investment trust separate account that invests solely in a publicly available mutual fund will not be adequately diversified. In addition, Applicants state that any underlying mutual fund, including any fund that sells shares to separate accounts, in effect, would be precluded from selling its shares to the public. Applicants conclude that, consequently, there will be no public shareholders of the Fund.

28. Applicants state that shared funding by unaffiliated insurance companies does not present any issues that do not already exist where a single insurance company is licensed to do business in several or all states. Applicants state that a particular state insurance regulatory body could require action that is inconsistent with the requirements of other states in which the insurance company offers its policies. Applicants maintain that the fact that different insurers may be domiciled in different states does not create a significantly different or enlarged problem.

29. Applicants submit that shared funding by unaffiliated insurers, in this respect, is no different than the use of the same investment company as the funding vehicle for affiliated insurers, which Rules 6e–2(b)(15) and 6e–3(T)(b)(15) permit. Affiliated insurers

[6] U.S. Department of the Treasury Regulation 1.817–5, which established diversification requirements for such funds, specifically permits, among other things, investment company managers, insurance company general and separate accounts and ''qualified pension or retirement plans'' to share the same underlying management investment company.

may be domiciled in different states and be subject to differing state law requirements. Affiliation does not reduce the potential, if any exists, for differences in state regulatory requirements. Applicants assert that, in any event, the conditions discussed below are designed to safeguard against, and provide procedures for resolving, any adverse effects that differences among state regulatory requirements may produce.

30. Rules 6e–2(b)(15) and 6e–3(T)(b)(15) give the insurance company the right to disregard the voting instructions of the contract owners. Applicants state that this right does not raise any issues different from those raised by the authority of state insurance administrators over separate accounts. Under Rules 6e–2(b)(15) and 6e–3(T)(b)(15), an insurer can disregard contract owner voting instructions only with respect to certain specified items. Affiliation does not eliminate the potential, if any exists, for divergent judgments as to the advisability or legality of a change in investment policies, principal underwriter, or investment advisor initiated by contract owners. The potential for disagreement is limited by the requirements in Rules 6e–2 and 6e–3(T) that the insurance company's disregard of voting instructions be reasonable and based on specific good-faith determinations.

31. Applicants note, however, that a particular insurer's disregard of voting instructions, nevertheless, could conflict with the majority of contract owner voting instructions. The insurer's action possibly could be different than the determination of all or some of the other insurers (including affiliated insurers) that the voting instructions of contract owners should prevail, and either could preclude a majority vote approving the change or could represent a minority view. If the insurer's judgment represents a minority position or would preclude a majority vote, then the insurer may be required, at the affected Fund's election, to withdraw its Separate Account's investment in the Fund and no charge or penalty will be imposed as a result of such withdrawal.

32. Applicants state that there is no reason that the investment policies of the Fund would or should be materially different from what these policies would or should be if the Fund funded only variable annuity contracts or variable life insurance policies, whether flexible premium or scheduled premium policies. Each type of insurance product is designed as a long-term investment program. Similarly, the investment strategy of Qualified Plans (*i.e.,* long-term investment) coincides with that of variable contracts and should not increase the potential for conflicts.

33. Applicants do not believe that the sale of shares of the Fund to Qualified Plans will increase the potential for material irreconcilable conflicts of interest between or among different types of investors. In particular, Applicants see very little potential for such conflicts beyond that which would otherwise exist between variable annuity and variable life insurance contract owners. Applicants submit that either there are no additional conflicts of interest or there exists the ability by the affected parties to resolve any such conflicts without harm to the contract owners in the Separate Accounts or to the participants under the Qualified Plans.

34. Applicants note that Section 817 of the Code is the only section where separate accounts are discussed. Section 817(h) imposes certain diversification standards on the underlying assets of variable annuity contracts and variable life insurance contracts held in the portfolios of management investment companies. The Code provides that a variable contract shall not be treated as an annuity contract or life insurance for any period (and any subsequent period) for which the investments, in accordance with regulations prescribed by the Treasury Department, are not adequately diversified. On March 2, 1989, the Treasury Department issued regulations (Treas. Reg. 1.817–5) (the ''Treasury Regulations'') that established diversification requirements for the investment portfolios underlying variable contracts. The Treasury Regulations provide that, in order to rely on certain look-through provisions of the diversification requirements, all of the beneficial interests in the underlying investment company must be held by the segregated asset accounts of one or more insurance companies. The Treasury Regulations, however, also contain certain exceptions to this requirement, one of which allows shares in the investment company to be held by the trustee of a qualified pension or retirement plan without adversely affecting the ability of shares in the same investment company also to be held by insurance company separate accounts (Treas. Reg. 1.817–5(f)(3)(iii)). Applicants assert, therefore, that neither the Code nor the Treasury Regulations or revenue rulings thereunder present any inherent conflicts of interest if Qualified Plans, variable annuity Separate Accounts, and variable life insurance Separate Accounts all invest in the same management investment company.

35. Applicants state that the promulgation of Rules 6e–2(b)(15) and 6e–3(T)(b)(15) under the 1940 Act preceded the issuance of the Treasury Regulations that made it possible for shares of an investment company to be held by the trustee of a Qualified Plan without adversely affecting the ability of shares in the same investment company also to be held by the separate accounts of insurance companies in connection with their variable contracts. Applicants submit that the sale of shares of the same investment company to Separate Accounts and to Qualified Plans could not have been envisioned at the time of the adoption of Rules 6e–2(b)(15) and 6e–3(T)(b)(15), given the then-current tax law.

36. Applicants state that while there are differences in the manner in which distributions are taxed for variable annuity contracts, variable life insurance contracts, and Qualified Plans, these differences will have no impact on the Fund and, therefore, the tax consequences of distributions from variable contracts and Qualified Plans do not raise any conflicts of interest with respect to the use of the Fund. When distributions are to be made, and the Separate Account or the Qualified Plan cannot net purchase payments to make the distributions, the Separate Account or the Qualified Plan will redeem shares of the affected Fund at its net asset value. The Qualified Plan then will make distributions in accordance with the terms of the Qualified Plan. The life insurance company will surrender values from the Separate Account into the general account to make distributions in accordance with the terms of the variable contract. Distributions and dividends will be declared and paid by the Fund without regard to the character of the shareholder.

37. Applicants state that with respect to voting rights, it is possible to provide an equitable means of giving such voting rights to separate account contract owners and to Qualified Plans. The transfer agent for each Fund will inform each Participating Insurance Company of its share ownership in each Separate Account, as well as inform the trustees of Qualified Plans of their holdings. The Participating Insurance Company will then solicit voting instructions in accordance with Rules 6e–2 and 6e–3(T).

38. Applicants maintain that the ability of the Fund to sell its shares directly to Qualified Plans does not create a ''senior security'' with respect to any variable annuity or variable life contract owner as opposed to a participant under a Qualified Plan. The

term ''senior security'' is defined under Section 18(g) of the 1940 Act to include ''any stock of a class having priority over any other class as to distribution of assets or payment of dividends.'' As noted above, regardless of the rights and benefits of participants under the Qualified Plans, or contract owners under variable contracts, the Qualified Plans and the Separate Accounts, respectively, have rights only with respect to their respective shares of the Fund. The Qualified Plans and the Separate Accounts can redeem such shares of the Fund only at the net asset value of the shares. No shareholder of a Fund will have any preference over any other shareholder of such Fund with respect to distribution of assets or payment of dividends.

39. Applicants maintain that various factors have kept more insurance companies from offering variable annuity and variable life insurance contracts than currently offer such contracts. These factors include the costs of organizing and operating a funding medium, the lack of expertise with respect to investment management (principally with respect to stock and money market investments), and the lack of name recognition by the public of certain insurers as investment experts with whom the public feels comfortable entrusting their investment dollars. For example, some smaller life insurance companies may not find it economically feasible, or within their investment or administrative expertise, to enter the variable contract business on their own. Use of the Fund as a common investment medium for variable contracts, as well as for Qualified Plans, would reduce or eliminate these concerns. Mixed and shared funding also should provide several benefits to variable contract owners by eliminating a significant portion of the costs of establishing and administering separate funds. Applicants assert that Participating Insurance Companies and Qualified Plans will benefit not only from the investment and administrative expertise of the responsible advisors and their affiliates, but also from the cost efficiencies and investment flexibility afforded by a large pool of funds. According to Applicants, mixed and shared funding, including the sale of shares of a Fund to Qualified Plans, also would permit a greater amount of assets available for investment by such Fund, thereby promoting economies of scale, by permitting increased safety through greater diversification, and by making the addition of new Portfolios to a Fund more feasible. Applicants maintain that making the Fund available for mixed and shared funding will therefore encourage more insurance companies to offer variable contracts, and this should result in increased competition with respect to both variable contract design and pricing, which can be expected to result in more product variation and lower charges.

40. Applicants submit that, regardless of the type of shareholder in a Fund, the responsible Advisor will continue to manage a Portfolio's investments solely and exclusively in accordance with each such Portfolio's investment objectives and restrictions as well as with any guidelines established by the board of trustees or directors, as applicable, of the Fund. Applicants state that individual Portfolio managers work with a pool of money and do not take into account the identity of the shareholders and that, thus, the Fund is managed in the same manner as any other mutual fund. According to Applicants, if shareholders are not pleased with a mutual fund's investment results, or the manner in which the mutual fund is being operated, these shareholders may redeem their shares. Applicants state that it is the duty of the management of a mutual fund to keep shareholders informed through updated prospectuses and annual and semi-annual reports. Applicants believe that these periodic communications to shareholders function as these communications are intended. Qualified Plans, as well as contract owners, thus, will be given up-to-date information necessary for them to make informed investment decisions.

Applicants' Conditions

Applicants consent to the following conditions:

1. A majority of the Board of Trustees or Board of Directors (''Board'') of each Fund shall consist of persons who are not ''interested persons'' of the Fund, as defined by Section 2(a)(19) of the 1940 Act and the rules thereunder and as modified by any applicable orders of the Commission, except that if this condition is not met by reason of the death, disqualification, or bona fide resignation of any trustee or director, then the operation of this condition shall be suspended: (a) For a period of 90 days if the vacancy or vacancies may be filled by the Board; (b) for a period of 150 days if a vote of shareholders is required to fill the vacancy or vacancies; or (c) for such longer period as the Commission may prescribe by order upon application.

2. Each Board will monitor the respective Fund for the existence of any material irreconcilable conflict among and between the interests of the contract owners of all Separate Accounts, Plan participants, and Qualified Plans investing in that Fund, and determine what action, if any, should be taken in response to such conflicts. A material irreconcilable conflict may arise for a variety of reasons, including: (a) An action by any state insurance regulatory authority; (b) a change in applicable federal or state insurance, tax, or securities laws or regulations, or a public ruling, private letter ruling, no-action or interpretative letter, or any similar action by insurance, tax, or securities regulatory authorities; (c) an administrative or judicial decision in any relevant proceeding; (d) the manner in which the investments of any Portfolio are being managed; (e) a difference in voting instructions given by variable annuity contract owners, variable life insurance contract owners, Plan trustees, or Plan participants; (f) a decision by a Participating Insurance Company to disregard the voting instructions of contract owners; or (g) if applicable a decision by a Qualified Plan to disregard the voting instructions of Plan participants.

3. Any Qualified Plan that executes a fund participation agreement upon becoming an owner of 10% or more of the assets of a Fund, any Participating Insurance Company (collectively, ''Participating Entities'') and the relevant Advisor or its affiliate will report any potential or existing conflicts to the Board. The relevant Advisor and each of the Participating Entities will be responsible for assisting the Board in carrying out the Board's responsibilities under these conditions by providing the Board with all information reasonably necessary for the Board to consider any issues raised. This includes, but is not limited to, an obligation by each Participating Insurance Company to inform the Board whenever it has determined to disregard contract owner voting instructions and, if pass-through voting is applicable, an obligation by each Qualified Plan that is a Participating Entity to inform the Board whenever it has determined to disregard Plan participant voting instructions. The responsibility to report such information and conflicts and to assist the Board will be a contractual obligation of all Participating Entities investing in a Fund under their agreements governing participation in the Fund, and such agreements shall provide that such responsibilities will be carried out with a view only to the interests of the contract owners or, if applicable, Plan participants.

4. If it is determined by a majority of the Board of a Fund, or a majority of its disinterested trustees or directors, that a

material irreconcilable conflict exists, the relevant Participating Entities shall, at their expense and to the extent reasonably practicable (as determined by a majority of the disinterested trustees or directors), take whatever steps are necessary to remedy or eliminate the material irreconcilable conflict, up to and including: (a) Withdrawing the assets allocable to some or all of the Separate Accounts from the affected Fund or any Portfolio and reinvesting such assets in a different investment medium, including another Portfolio; (b) in the case of Participating Insurance Companies, submitting the question of whether such segregation should be implemented to a vote of all affected contract owners and, as appropriate, segregating the assets of any appropriate group (*i.e.*, variable annuity contract owners or variable life insurance contract owners of one or more Participating Insurance Companies) that votes in favor of such segregation, or offering to the affected contract owners the option of making such a change; (c) withdrawing the assets allocable to some or all of Qualified Plans that are Participating Entities from the affected Fund or any Portfolio and reinvesting such assets in a different investment medium, including another Portfolio; and (d) establishing a new registered management investment company or managed separate account. If a material irreconcilable conflict arises because of a Participating Insurance Company's decision to disregard contract owner voting instructions and that decision represents a minority position or would preclude a majority vote, the Participating Insurance Company may be required, at the Fund's election, to withdraw its Separate Account's investment in the Fund, and no charge or penalty will be imposed as a result of such withdrawal. If a material irreconcilable conflict arises because of the decision of a Qualified Plan that is a Participating Entity to disregard Plan participant voting instructions, if applicable, and that decision represents a minority position or would preclude a majority vote, the Qualified Plan may be required, at the election of the Fund, to withdraw its investment in the Fund, and no charge or penalty will be imposed as a result of such withdrawal. The responsibility to take remedial action in the event of a Board determination of a material irreconcilable conflict and to bear the cost of such remedial action shall be a contractual obligation of all Participating Entities under their agreements governing participation in the Fund, and these responsibilities will be carried out with a view only to the interests of the contract owners or, as applicable, Plan participants.

For the purposes of this Condition 4, a majority of the disinterested members of the Board shall determine whether or not any proposed action adequately remedies any material irreconcilable conflict, but in no event will the Fund or the Advisors or their affiliates, as relevant, be required to establish a new funding medium for any variable contract. No Participating Insurance Company shall be required by this Condition 4 to establish a new funding medium for any variable contract if an offer to do so has been declined by vote of a majority of contract owners materially adversely affected by the material irreconcilable conflict. No Qualified Plan that is a Participating Entity shall be required by this Condition (4) to establish a new funding medium for such Qualified Plan if (a) a majority of Plan participants materially and adversely affected by the material irreconcilable conflict vote to decline such offer or (b) pursuant to governing Plan documents and applicable law, the Plan makes such decision without a Plan participant vote.

5. The Board's determination of the existence of a material irreconcilable conflict and its implications shall be made known promptly in writing to all Participating Entities and the relevant Advisor or its affiliate.

6. Participating Insurance Companies will provide pass-through voting privileges to all variable contract owners for so long as the Commission continues to interpret the 1940 Act as requiring pass-through voting privileges for variable contract owners. Accordingly, such Participating Insurance Companies will vote shares of each Portfolio held in their registered separate accounts in a manner consistent with voting instructions timely received from such contract owners. Each Participating Insurance Company will vote shares of each Portfolio held in its registered Separate Accounts for which no timely voting instructions are received, as well as shares attributable to the Participating Insurance Company, in the same proportion as those shares for which voting instructions are received. Participating Insurance Companies shall be responsible for assuring that each of their registered Separate Accounts investing in a Fund calculates voting privileges in a manner consistent with all other Participating Insurance Companies. The obligation to vote a Fund's shares and to calculate voting privileges in a manner consistent with all other registered Separate Accounts investing in a Fund shall be a contractual obligation of all Participating Insurance Companies under their agreements governing participation in the Fund. Each Plan will vote as required by applicable law and governing Plan documents.

7. A Fund will notify all Participating Insurance Companies and Qualified Plans that disclosure regarding potential risks of mixed and shared funding may be appropriate in prospectuses for any of the Separate Accounts and in Plan documents. Each Fund will disclose in its prospectus that: (a) Shares of the Fund are offered to insurance company Separate Accounts that fund both variable annuity and variable life insurance contracts, and to Qualified Plans; (b) due to differences of tax treatment or other considerations, the interests of various contract owners participating in the Fund and the interests of Qualified Plans investing in the Fund might at some time be in conflict; and (c) the Board will monitor the Fund for any material conflicts and determine what action, if any, should be taken.

8. All reports received by the Board of potential or existing conflicts, and all Board action with regard to determining the existence of a conflict, notifying Participating Entities and any Advisor and its affiliates of a conflict, and determining whether any proposed action adequately remedies a conflict, will be properly recorded in the minutes of the Board or other appropriate records, and such minutes or other records shall be made available to the Commission upon request.

9. If and to the extent Rule 6e–2 and Rule 6e–3(T) under the 1940 Act are amended, or Rule 6e–3 is adopted, to provide exemptive relief from any provision of the 1940 Act or the rules thereunder with respect to mixed or shared funding on terms and conditions materially different from any exemptions granted in the order requested in the application, then each Fund and/or the Participating Insurance Companies, as appropriate, shall take such steps as may be necessary to comply with Rule 6e–2 and Rule 6e–3(T), as amended, and Rule 6e–3, as adopted, to the extent such rules are applicable.

10. Each Fund will comply with all provisions of the 1940 Act requiring voting by shareholders (which, for these purposes, shall be the persons having a voting interest in the shares of that Fund), and in particular each Fund will either provide for annual meetings (except insofar as the Commission may interpret Section 16 of the 1940 Act not to require such meetings) or comply

with Section 16(c) of the 1940 Act (although the Fund is not one of the trusts described in Section 16(c) of the 1940 Act) as well as with Section 16(a) of the 1940 Act and, if and when applicable, Section 16(b) of the 1940 Act. Further, each Fund will act in accordance with the Commission's interpretation of the requirements of Section 16(a) of the 1940 Act with respect to periodic elections of directors (or trustees) and with whatever rules the Commission may promulgate with respect thereto.

11. The Participating Entities and the relevant Advisor or its affiliate shall at least annually submit to the Board of a Fund such reports, materials or data as the Board may reasonably request so that it may fully carry out the obligations imposed upon it by the conditions contained in the application and said reports, materials and data shall be submitted more frequently, if deemed appropriate, by the Board. The obligations of Participating Entities to provide these reports, materials and data to the Board of the Fund when it so reasonably requests, shall be a contractual obligation of all Participating Entities under their agreements governing participation in each Fund.

12. If a Qualified Plan should become an owner of 10% or more of the assets of a Fund, the Fund shall require such Plan to execute a participation agreement with such Fund which includes the conditions set forth herein to the extent applicable. A Qualified Plan will execute an application containing an acknowledgment of this condition upon such Plan's initial purchase of the shares of any Fund.

Conclusion

Applicants submit, based on the grounds summarized above, that the exemptions requested are necessary or appropriate in the public interest and consistent with the protection of investors and the purposes fairly intended by the policy and provisions of the 1940 Act.

For the Commission, by the Division of Investment Management, pursuant to delegated authority.

Margaret H. McFarland,

Deputy Secretary.

[FR Doc. 02–19533 Filed 8–1–02; 8:45 am]

BILLING CODE 8010–01–P

SECURITIES AND EXCHANGE COMMISSION

[Release No. 34–46272; File No. SR–ISE–2002–11]

Self-Regulatory Organizations; International Securities Exchange, Inc.; Order Approving Proposed Rule Change, and Notice of Filing and Order Granting Accelerated Approval to Amendment Nos. 1 and 2 Relating to a Market Maker Inactivity Fee

July 26, 2002.

I. Introduction

On April 16, 2002, the International Securities Exchange LLC (''ISE'') filed with the Securities and Exchange Commission (''Commission''), pursuant to section 19(b)(1) of the Securities Exchange Act of 1934 (''Act'')[1] and Rule 19b–4 thereunder,[2] a proposed rule change to impose a Competitive Market Maker (''CMM'') inactivity fee. On May 6, 2002, the Exchange's rule proposal was published for comment in the **Federal Register**.[3] The Commission received two comment letters on the proposal.[4] On April 30, 2002 and June 19, 2002, ISE submitted Amendment Nos. 1 and 2 to the proposal, respectively. [5] On June 19, 2002, the ISE submitted a response to comments.[6] This order approves the proposed rule change, publishes notice of Amendment Nos. 1 and 2 to the proposed rule change, and grants accelerated approval of Amendment Nos. 1 and 2.

[1] 15 U.S.C. 78s(b)(1).

[2] 17 CFR 240.19b–4.

[3] *See* Securities Exchange Act Release No. 45816 (April 24, 2002), 67 FR 30406.

[4] *See* letters to Jonathan G. Katz, Secretary, Commission, from Henry Swartz, Principal, Equity Financial Products, Banc of America Securities, LLC, (''Banc of America'') dated May 23, 2002 (''Banc of America Letter''), and Matthew D. Wayne, Chief Legal Officer, Knight Financial Products LLC, (''Knight'') dated April 30, 2002 (''Knight Letter'').

[5] *See* letters from Michael Simon, Senior Vice President and General Counsel, ISE, to Nancy Sanow, Assistant Director, Division of Market Regulation, Commission, dated April 29, 2002 (''Amendment No. 1'') and June 18, 2002 (''Amendment No. 2''). In Amendment No. 1, the ISE made a technical change to the rule text. In Amendment No. 2, the ISE clarified the application of the fee between lessors and lessees, changed terminology to reflect the fact that the ISE has ''demutualized'' and that trading rights are now reflected in shares of Class B Common Stock, removed obsolete language from the Primary Market Maker (''PMM'') inactivity fee regarding the effective date of that fee, and extended the proposed effective date from July 1, 2002 to August 1, 2002.

[6] *See* letter from Michael Simon, Senior Vice President and General Counsel, ISE, to Jonathan G. Katz, Secretary, Commission, dated June 18, 2002 (''ISE Response'').

II. Description of the Proposed Rule Change

The Exchange proposes to adopt a fee that would allow it to charge $25,000 per month to inactive CMM memberships, effective August 1, 2002.[7] The fee would apply to the owner of an inactive CMM membership except with regard to an owner that entered into a lease prior to August 1, 2002. In that case, the fee would apply to the lessee, if the lessee has been approved to operate the membership.

The fee would not apply to a member that holds an inactive CMM membership in a group of securities in which it also is operating the PMM membership pursuant to a lease. In that case, the member cannot operate both the PMM and CMM membership, and the member reasonably may want to retain control of the CMM membership so that it can operate the membership when its PMM lease expires. The proposal also would authorize the Exchange staff to grant exemptions if a member holds multiple inactive CMM memberships. In that situation, the Exchange could grant exemptions for all but one such membership as long as the member presents a business plan establishing that trading will begin in the inactive memberships over a reasonable time period.

The Exchange represents that it based the amount of the fee on conservative estimates of the revenues lost due to an inactive CMM membership. In addition, the Exchange represents that it would periodically reevaluate this fee to maintain the relationship between the amount of the fee and the lost revenue being recouped.

III. Comments Received

The Commission received comments on the proposal from Banc of America and Knight.[8] Banc of America objected to the proposal for several reasons. In particular, Banc of America argued that no precedent supports the proposed fee; the proposal improperly targets owners that do not operate their memberships, and that owners could not always rely on leasing to avoid the fee because seats would unlikely be leased continually and the proposed effective date would not provide enough time for owners to lease their seats; the fee would add to the start-up costs for market makers which may result in a barrier to entry to the exchange; and to require

[7] *See* Amendment No. 2, *supra* note.

[8] *See* Banc of America Letter and Knight Letter, supra note.

additional members to trade could reduce liquidity on the exchange.[9]

ISE responded to Banc of America's comment regarding precedent for the fee by arguing that its PMM inactivity fee and the Philadelphia Stock Exchange, Inc.'s shortfall fee, which imposes a fee on specialists who do not meet certain volume thresholds, set precedent for the CMM inactivity fee.[10] In response to Banc of America's argument that the proposal targets owners, ISE believes that the purpose of an exchange is to provide a market place on which members can trade, and that it is reasonable for an exchange to take action that encourages the active use of its trading rights and that imposes fees for revenues that are foregone when those rights are not used.[11] ISE believes that this is particularly true due to its recent demutualization. ISE notes that the proposed fee applies only to those persons with trading rights associated with its Series B–2 Common Stock, the CMM interests. In addition, ISE notes that Banc of America is free to hold its Class A Common Stock (the ISE Class A Stock representing virtually all the equity in the ISE) for investment purposes without being subject to an inactivity fee. Further, ISE believes that leasing is a viable alternative for an owner of a CMM membership to avoid the fee.[12] ISE notes that it provided all ISE members with notice of this proposed fee on April 18, 2002, and amended the proposal to delay the effective date by one month. In addition, ISE represents that some current ISE members that already have trading operations on the ISE and could promptly begin trading in such memberships once entering into a lease, are seeking to lease or buy additional memberships.

With regard to Banc of America's claim that the fee could be a barrier to entry, ISE notes that a potential lessee can control the time it enters into a lease and is approved for membership so that it can start trading immediately.[13] In addition, if a member leases multiple CMM memberships, the proposal permits the ISE to grant a lessee an exemption from the fee if the lessee is operating one membership and presents a reasonable plan for opening trading in all additional memberships. Thus, ISE believes that the proposed inactivity fee would not create a barrier to entry to the ISE market because the fee could be avoided. Finally, Banc of America suggested that the proposed fee could reduce liquidity on ISE.[14] In contrast, ISE believes that the fee would likely enhance liquidity on the Exchange.[15]

Knight supported a monthly fee applicable to inactive CMM memberships but argued that the amount of the fee should be no more than $10,000 per month, one-tenth the amount charged to inactive PMM memberships.[16] ISE responded to Knight's concern by noting that although there is a ten-to-one ratio between PMMs and CMMs on the ISE, both the PMM and CMM inactivity fees are based on the approximate revenue the ISE foregoes when a membership is not trading. ISE represents that PMMs do not, on average generate ten times the fees that a CMM generates. ISE believes that both the $100,000 PMM inactivity fee and the $25,000 CMM inactivity fee fairly represent the lost revenue for each category of membership and thus each fee is proper.[17]

IV. Solicitation of Comments

Interested persons are invited to submit written data, views, and arguments concerning Amendment Nos. 1 and 2, including whether Amendments No. 1 and 2 are consistent with the Act. Persons making written submissions should file six copies thereof with the Secretary, Securities and Exchange Commission, 450 Fifth Street, NW., Washington, DC 20549–0609. Copies of the submission, all subsequent amendments, all written statements with respect to the proposed rule change that are filed with the Commission, and all written communications relating to the proposed rule change between the Commission and any person, other than those that may be withheld from the public in accordance with the provisions of 5 U.S.C. 552, will be available for inspection and copying in the Commission's Public Reference Room. Copies of such filing also will be available for inspection and copying at the principal office of the ISE. All submissions should refer to File No. SR–ISE–2002–11 and should be submitted by August 23, 2002.

V. Discussion

After careful review, the Commission finds that the proposed rule change is consistent with the requirements of the Act and the rules and regulations thereunder applicable to a national securities exchange[18] and, in particular, the requirements of section 6 of the Act.[19] Among other provisions, section 6(b)(4) of the Act[20] requires that the rules of the Exchange provide for the equitable allocation of reasonable dues, fees, and other charges among its members and issuers and other persons using its facilities.

The Commission notes that the Exchange currently imposes an inactivity fee on PMM memberships and that the Phlx also imposes a similar fee on its specialists.[21] In addition, the Commission believes that under ISE's unique market structure the proposal should provide an appropriate incentive for entities that control ISE trading rights to encourage participation on the Exchange. In this regard, the Commission notes that shares of ISE common stock, exclusive of trading rights, may be held for investment purposes without being subject to the proposed fee.[22] Finally, the Commission believes that the criteria used by the Exchange to calculate the amount of the fee is consistent with its obligation to equitably allocate reasonable fees and charges among its members.

VI. Conclusion

The original rule proposal was noticed for public comment in April 2002. Amendment No. 1 makes a technical correction to the rule text. Amendment No. 2 makes, technical changes, clarifies the proposal, and extends the effective date in response to comments. The Commission believes that it has received and fully considered substantial, meaningful comments with respect to the ISE's proposal, and that Amendment Nos. 1 and 2 do not raise issues that warrant delay. In addition, the Commission notes that ISE proposes August 1, 2002, as the effective date for this proposal. Accordingly, pursuant to section 19(b)(2) of the Act,[23] the Commission finds good cause to approve Amendment Nos. 1 and 2 prior to the thirtieth day after notice of the

[9] *See* Banc of America Letter, supra note.

[10] *See* ISE Response, *supra* note 6. *See also* Exchange Act Release No. 45442 (February 13, 2002), 67 FR 8330 (February 22, 2002) (File No. SR–Phlx–2001–115).

[11] *See* ISE Response, *supra* note 6. *See also* ISE Rule 300(b), which requires non-member owners of market maker shares to lease the trading rights to approved members.

[12] *See* ISE Response, *supra* note 6.

[13] *See* ISE Response, *supra* note 6.

[14] *See* Banc of America Letter, *supra* note 4.

[15] *See* ISE Response, *supra* note 6.

[16] *See* Knight Letter, *supra* note 4.

[17] *See* ISE Response, supra note 6.

[18] The Commission has considered the proposed rules' impact on efficiency, competition and capital formation. 15 U.S.C. 78c(f).

[19] 15 U.S.C. 78f.

[20] 15 U.S.C. 78f(b)(4).

[21] *See supra* note 10.

[22] *See* ISE Response, *supra* note 6.

[23] 15 U.S.C. 78s(b)(2).

Amendments is published in the **Federal Register**.

It is therefore ordered, pursuant to section 19(b)(2) of the Act,[24] that Amendment Nos. 1 and 2 to the ISE's proposed rule change are hereby granted accelerated approval; and

It is also ordered, pursuant to section 19(b)(2) of the Act,[25] that the proposed rule change (File No. SR–ISE–2002–11), as amended, is hereby approved.

For the Commission, by the Division of Market Regulation, pursuant to delegated authority.[26]

Margaret H. McFarland,

Deputy Secretary.

[FR Doc. 02–19535 Filed 8–1–02; 8:45 am]

BILLING CODE 8010–01–P

[24] *Id.*

[25] *Id.*

[26] 17 CFR 200.30–3(a)(12).

SECURITIES AND EXCHANGE COMMISSION

[Release No. 34–46256; File No. SR–NASD–2002–62]

Self-Regulatory Organizations; National Association of Securities Dealers, Inc.; Order Granting Approval to Proposed Rule Change Relating to Amending Code of Arbitration Procedure to Conform Rule 10314(b) to the Current Minimum Standard Applicable to Claims

July 25, 2002.

I. Introduction

On May 9, 2002, the National Association of Securities Dealers, Inc. (''NASD'' or ''Association''), through its wholly-owned subsidiary, NASD Dispute Resolution, Inc. (''NASD Dispute Resolution'') filed with the Securities and Exchange Commission (''Commission''), pursuant to section 19(b)(1) of the Securities Exchange Act of 1934 (''Act'')[1] and Rule 19b-4 thereunder,[2] a proposed rule change to amend the NASD Code of Arbitration Procedure to conform Rule 10314(b) to the current minimum standard applicable to claims.

The proposed rule change was published for comment in the **Federal Register** on June 20, 2002.[3] The Commission received two comments on the proposal.[4] This order approves the proposed rule change.

[1] 15 U.S.C. 78s(b)(1).

[2] 17 CFR 240.19b–4.

[3] *See* Securities Exchange Act Release No. 46077 (June 14, 2002), 67 FR 42088 (June 20, 2002).

[4] *See* letters to Jonathan G. Katz, Secretary, Commission, from Franklin Geerdes, Attorney, dated May 24, 2002 (''Geerdes Letter''); Martin L. Feinberg, Attorney, dated July 7, 2002 (''Feinberg Letter'').

II. Description of the Proposal

In its proposal, NASD Dispute Resolution proposed to amend the Code to conform Rule 10314(b) to the current minimum standard applicable to claims, so that Answers need only specify relevant facts and available defenses to the Statement of Claim that was submitted by the claimant, rather than specifying all such facts and defenses that may be relied upon at the hearing.

In the proposal, NASD Dispute Resolution explained that it recently streamlined its procedures for review of arbitration claims. NASD Dispute Resolution does not consider a Statement of Claim to be deficient if it meets the minimum requirements of a properly signed Uniform Submission Agreement that names the same respondents as shown on the Statement of Claim, proper fees, and sufficient copies of the Statement of Claim. The proposed rule change would make the minimum requirements contents of an Answer consistent with those of a Statement of Claim.

III. Summary of Comments

The Commission received two comments on the proposal.[5] Commenters noted a perceived ambiguity in the proposed text of NASD Rule 10314(b)(1). In the proposed rule change, NASD Dispute Resolution had proposed the following text: ''The Answer shall specify all relevant facts and available defenses to the Statement of Claim submitted. . . .'' One commenter suggested that the modifier ''all'' should be placed before ''available defenses,''[6] while another suggested that ''the'' should precede ''relevant facts.''[7] NASD Dispute Resolution maintains, and the Commission agrees, that the proposed rule text does not require the revisions proposed by the commenters.[8]

IV. Discussion

After careful review, the Commission finds that the proposed rule change is consistent with the requirements of the Act and the rules and regulations thereunder applicable to a national securities association[9] and, in particular, the requirements of section 15A of the Act[10] and the rules and regulations thereunder. The Commission finds specifically that the proposed rule change is consistent with section 15A(b)(6) of the Act,[11] which requires, among other things, that the rules of an association be designed to prevent fraudulent and manipulative acts and practices, to promote just and equitable principles of trade, and, in general, to protect investors and the public interest.[12] The Commission believes that the proposed rule harmonizes the pleading requirements for claimants and respondents in arbitration proceedings administered by NASD Dispute Resolution in a manner consistent with the Act. Further, the Commission has carefully considered the suggestions submitted by commenters and has concluded that the proposed rule text does not require the revisions proposed by the commenters.

[5] *See* note 4, *supra.*

[6] *See* Feinberg Letter.

[7] *See* Geerdes Letter.

[8] Telephone conference between Jean I. Feeney, Associate Vice President and Chief Counsel, NASD Dispute Resolution and Geoffrey Pemble, Attorney, Division of Market Regulation, Commission (July 25, 2002).

[9] In approving this proposed rule change, the Commission notes that it has considered the proposed rule's impact on efficiency, competition, and capital formation. 15 U.S.C. 78c(f).

[10] 15 U.S.C. 78*o*–3.

[11] 15 U.S.C. 78*o*–3(b)(6).

[12] *Id.*

V. Conclusion

It is therefore ordered, pursuant to section 19(b)(2) of the Act,[13] that the proposed rule change (File No. SR–NASD–2002–62) be, and it hereby is, approved.

For the Commission, by the Division of Market Regulation, pursuant to delegated authority.[14]

Margaret H. McFarland,

Deputy Secretary.

[FR Doc. 02–19534 Filed 8–1–02; 8:45 am]

BILLING CODE 8010–01–P

[13] 15 U.S.C. 78s(b)(2).

[14] 17 CFR 200.30–3(a)(12).

SMALL BUSINESS ADMINISTRATION

Data Collection Available for Public Comments and Recommendations

ACTION: Notice and request for comments.

SUMMARY: In accordance with the Paperwork Reduction Act of 1995, this notice announces the Small Business Administration's intentions to request approval on a new, and/or currently approved information collection.

DATES: Submit comments on or before October 1, 2002.

ADDRESSES: Send all comments regarding whether this information collection is necessary for the proper performance of the function of the agency, whether the burden estimates are accurate, and if there are ways to minimize the estimated burden and enhance the quality of the collection, to

Ying Lowery, Senior Economist, Office Advocacy, Small Business Administration, 409 3rd Street, SW., Suite 7800, Washington DC 20416.

FOR FURTHER INFORMATION CONTACT: Ying Lowery, Senior Economist, (202) 205–6947 or Curtis B. Rich, Management Analyst, (202) 205–7030.

SUPPLEMENTARY INFORMATION:

Title: Impact of the American Disabled Act on Small Business.

Form No's: N/A.

Description of Respondents: Business Owners.

Annual Responses: 1000.

Annual Burden: 500.

Jacqueline White,

Chief, Administrative Information Branch.

[FR Doc. 02–19585 Filed 8–1–02; 8:45 am]

BILLING CODE 8025–01–P

SMALL BUSINESS ADMINISTRATION

[Declaration of Disaster #3435]

State of California

Plumas County and the contiguous counties of Butte, Lassen, Sierra, Shasta, Tehama, and Yuba in the State of California constitute a disaster area as a result of damages caused by a microburst that occurred on July 11, 2002. Applications for loans for physical damage as a result of this disaster may be filed until the close of business on September 27, 2002 and for economic injury until the close of business on April 29, 2003 at the address listed below or other locally announced locations:

U.S. Small Business Administration, Disaster Area 4 Office, P.O. Box 13795, Sacramento, CA 95853–4795.

The interest rates are:

	Percent
For Physical Damage:	
Homeowners With Credit Available Elsewhere	6.750
Homeowners Without Credit Available Elsewhere	3.375
Businesses With Credit Available Elsewhere	7.000
Businesses and Non-Profit Organizations Without Credit Available Elsewhere	3.500
Others (Including Non-Profit Organizations) With Credit Available Elsewhere	6.375
For Economic Injury: Businesses and Small Agricultural Cooperatives Without Credit Available Elsewhere	3.500

The number assigned to this disaster for physical damage is 343511 and for economic damage is 9Q8300.

(Catalog of Federal Domestic Assistance Program Nos. 59002 and 59008.)

Dated: July 29, 2002.

Hector V. Barreto,

Administrator.

[FR Doc. 02–19584 Filed 8–1–02; 8:45 am]

BILLING CODE 8025–01–P

SMALL BUSINESS ADMINISTRATION

[Declaration of Disaster #3414]

State of New York; Amendment #3

In accordance with information received from the Federal Emergency Management Agency, the above numbered declaration is hereby amended to extend the deadline for filing applications for physical damages as a result of this disaster to September 15, 2002.

All other information remains the same, *i.e.*, the deadline for filing applications for economic injury is February 17, 2003.

(Catalog of Federal Domestic Assistance Program Nos. 59002 and 59008).

Dated: July 29, 2002.

Herbert L. Mitchell,

Associate Administrator for Disaster Assistance.

[FR Doc. 02–19583 Filed 8–1–02; 8:45 am]

BILLING CODE 8025–01–P

DEPARTMENT OF TRANSPORTATION

Coast Guard

[USCG 2002–12916]

National Offshore Safety Advisory Committee; Vacancies

AGENCY: Coast Guard, DOT.

ACTION: Request for applications.

SUMMARY: The Coast Guard is seeking applications for membership on the National Offshore Safety Advisory Committee (NOSAC). NOSAC provides advice and makes recommendations to the Coast Guard on matters affecting the offshore industry.

DATES: Applications should reach us on or before September 30, 2002.

ADDRESSES: You may request an application form by writing to Commandant (G–MSO–2), U.S. Coast Guard, 2100 Second Street SW., Washington, DC 20593–0001; by calling 202 267–1181; or by faxing 202–267–4570. A copy of the application form is available from the Coast Guard's Advisory Committee Web page at: *http://www.uscg.mil/hq/g-m/advisory/index.htm.* Send your application in written form to the above street address. This notice and an application form are available on the Internet at http://dms.dot.gov.

FOR FURTHER INFORMATION CONTACT: Captain M.W. Brown, Executive Director of NOSAC, or James M. Magill, Assistant to the Executive Director, telephone 202 267–1181, fax 202 267–4570.

SUPPLEMENTARY INFORMATION:

NOSAC is a Federal advisory committee under 5 U.S.C. App. 2. It consists of 14 regular members who have particular knowledge and experience regarding offshore technology, equipment, safety and training and environmental expertise in the exploration or recovery of offshore mineral resources. It provides advice and makes recommendations to the Assistant Commandant for Marine Safety, Security and Environmental Protection on safety and rulemaking matters relating to the offshore mineral and energy industries. This advice assists us in formulating the positions of the United States in advance of meetings of the International Maritime Organization.

NOSAC meets twice a year, with one of these meetings being held at Coast Guard Headquarters in Washington, DC. It may also meet for extraordinary purposes. Subcommittees and working groups may meet to consider specific problems as required.

We will consider applications for five positions that expire or become vacant in January 2003. To be eligible, applicants should have experience in one of the following categories: (1) Offshore supply vessel services including geophysical services, (2) offshore operations, (3) construction of offshore facilities, (4) offshore production of petroleum, or (5) offshore drilling. Please state on the application form which of the five categories you are applying for. Each member normally serves a term of 3 years or until a replacement is appointed. A few members may serve consecutive terms. All members serve at their own expense and receive no salary, reimbursement of travel expenses, or other compensation from the Federal Government.

In support of the policy of the U.S. Department of Transportation on gender and ethnic diversity, the Coast Guard encourages applications from qualified women and minority group members.

Applicants selected may be required to complete a Confidential Financial Disclosure Report (OGE Form 450). We may not release the report or the information in it to the public, except under an order issued by a Federal court or as otherwise provided under the Privacy Act (5 U.S.C. 552a).

Dated: July 24, 2002.

Joseph J. Angelo,

Director of Standards, Marine Safety, Security and Environmental Protection.

[FR Doc. 02–19547 Filed 8–1–02; 8:45 am]

BILLING CODE 4910–15–P

DEPARTMENT OF TRANSPORTATION

Coast Guard

[USCG–2002–12927]

Merchant Marine Personnel Advisory Committee

AGENCY: Coast Guard, DOT.

ACTION: Notice of meetings.

SUMMARY: The Merchant Marine Personnel Advisory Committee (MERPAC) and its working groups will meet to discuss various issues relating to the training and fitness of merchant marine personnel. MERPAC advises the Secretary of Transportation on matters relating to the training, qualifications, licensing, certification, and fitness of seamen serving in the U.S. merchant marine. All meetings will be open to the public.

DATES: MERPAC will meet on Wednesday, September 4, 2002, from 8 a.m. to 4 p.m. and on Thursday, September 5, 2002, from 8 a.m. to 3 p.m. These meetings may adjourn early if all business is finished. Requests to make oral presentations should reach the Coast Guard on or before August 21, 2002. Written material and requests to have a copy of your material distributed to each member of the committee or subcommittee should reach the Coast Guard on or before August 21, 2002.

ADDRESSES: MERPAC will meet on both days at the Coast Guard Club of Cleveland, 1055 East 9th Street, Cleveland, OH. Further directions regarding the location of the Coast Guard Club may be obtained by contacting Mr. Danny Morris at (216) 687–1755. Send written material and requests to make oral presentations to Commander Brian J. Peter, Commandant (G–MSO–1), U.S. Coast Guard Headquarters, 2100 Second Street SW., Washington, DC 20593–0001. This notice is available on the Internet at *http://dms.dot.gov.*

FOR FURTHER INFORMATION CONTACT: For questions on this notice, contact Commander Brian J. Peter, Executive Director of MERPAC, or Mr. Mark C. Gould, Assistant to the Executive Director, telephone 202–267–0229, fax 202–267–4570, or e-mail *mgould@comdt.uscg.mil.*

SUPPLEMENTARY INFORMATION: Notice of these meetings is given under the Federal Advisory Committee Act, 5 U.S.C. App. 2.

Agenda of Meeting on September 4, 2002

The full committee will meet to discuss the objectives for the meeting. The committee will then break up into the following working groups: Task Statement 30, concerning use of military sea service and training for merchant marine licenses; Task Statement 34, concerning the minimum standard of competence in security for a ship's security officer and crew; Task Statement 35, concerning the gap in signaling requirements between STCW and domestic rules; and Task statement 36, concerning the recommendations on a training program for officers in charge of an engineering watch coming up through the hawsepipe. New working groups may be formed to address any new issues or tasks. At the end of the day, the working groups will make a report to the full committee on what has been accomplished in their meetings. No action will be taken on these reports on this date.

Agenda of Meeting on September 5, 2002

The agenda comprises the following:

(1) Introduction.

(2) Working Groups' Reports:

(a) Task Statement 30, concerning use of military sea service and training for merchant marine licenses;

(b) Task Statement 34, concerning the minimum standard of competence in security for a ship's security officer and crew;

(c) Task Statement 35, concerning the gap in signaling requirements between STCW and domestic rules;

(d) Task Statement 36, concerning the recommendations on a training program for officers in charge of an engineering watch coming up through the hawsepipe.

(3) Other items to be discussed:

(a) Standing Committee—Prevention Through People;

(b) Other items brought up for discussion by the committee or the public.

Procedural

Both meetings are open to the public. Please note that the meetings may adjourn early if all business is finished. At the Chair's discretion, members of the public may make oral presentations during the meetings. If you would like to make an oral presentation at a meeting, please notify the Executive Director no later than August 21, 2002. Written material for distribution at a meeting should reach the Coast Guard no later than August 21, 2002. If you would like a copy of your material distributed to each member of the committee or subcommittee in advance of the meeting, please submit 25 copies to the Executive Director no later than August 21, 2002.

Information on Services for Individuals With Disabilities

For information on facilities or services for individuals with disabilities or to request special assistance at the meetings, contact the Assistant Executive Director as soon as possible.

Dated: July 24, 2002.

Joseph J. Angelo,

Director of Standards, Marine Safety, Security & Environmental Protection.

[FR Doc. 02–19550 Filed 8–1–02; 8:45 am]

BILLING CODE 4910–15–P

DEPARTMENT OF TRANSPORTATION

Federal Aviation Administration

Approval of Noise Compatibility Program, Four Corners Regional Airport, Farmington, New Mexico

AGENCY: Federal Aviation Administration, DOT.

ACTION: Notice.

SUMMARY: The Federal Aviation Administration (FAA) announces its findings on the noise compatibility program submitted by the City of Farmington, New Mexico under the provisions of Title 49, USC, Chapter 475 and CFR part 150. These findings are made in recognition of the description of Federal and nonfederal responsibilities and Senate Report No. 96–52 (1980). On January 9, 2002, the FAA determined that the noise exposure maps submitted by the City of Farmington under Part 150 were in compliance with applicable requirements. On July 8, 2002, the Administrator approved the noise compatibility program. Most of the recommendations of the program were approved.

EFFECTIVE DATE: The effective date of the FAA's approval of the City of Farmington Noise Compatibility Program is July 8, 2002.

FOR FURTHER INFORMATION CONTACT: Joyce M. Porter, Department of Transportation, Federal Aviation Administration, 2601 Meacham Boulevard, Fort Worth, Texas, 76137, (817) 222–5640. Documents reflecting this FAA action may be reviewed at this same location.

SUPPLEMENTARY INFORMATION: This notice announces that the FAA has given its overall approval to the noise compatibility program for Four Corners Regional Airport, Farmington, New Mexico, effective July 8, 2002.

Under Title 49 USC, Section 47504 (hereinafter referred to as Title 49''), an airport operator who has previously submitted a noise exposure map may submit to the FAA a noise compatibility program which sets forth the measures taken or proposed by the airport operator for the reduction of existing non-compatible land uses within the area covered by the noise exposure maps. Title 49 requires such programs to be developed in consultation with interested and affected parties including local communities, government agencies, airport users, and FAA personnel.

Each airport noise compatibility program developed in accordance with Federal Aviation Regulations (FAR) Part 150 is a local program, not a Federal Program. The FAA does not substitute its judgment for that of the airport proprietor with respect to which measures should be recommended for action. The FAA's approval or disapproval of FAR Part 150 program recommendations is measured according to the standards expressed in Part 150 and Title 49 and is limited to the following determinations:

a. The noise compatibility program was developed in accordance with the provisions and procedures of FAR Part 150;

b. Program measures are reasonably consistent with achieving the goals of reducing existing non-compatible land uses around the airport and preventing the introduction of additional non-compatible land uses;

c. Program measures would not create an undue burden on interstate or foreign commerce, unjustly discrimination against types or classes of aeronautical uses, violate the terms of airport grant agreements, or intrude into areas preempted by the Federal Government; and

d. Program measures relating to the use of flight procedures can be implemented within the period covered by the program without derogating safety, adversely affecting the efficient use and management of the navigable airspace and air traffic control systems, or adversely affective other powers and responsibilities of the Administrator prescribed by law.

Specific limitations with respect to FAA's approval or an airport noise compatibility program are delineated in FAR Part 150, section 150.5. Approval is not a determination concerning the acceptability of land uses under Federal, state, or local law. Approval does not, by itself, constitute an FAA implementing action. A request for Federal action or approval to implement specific noise compatibility measures may be required, and an FAA decision on the request may require an environmental assessment of the proposed action. Approval does not constitute a commitment by the FAA to financially assist in the implementation of the program nor a determination that all measures covered by the program are eligible for grant-in-aid funding from the FAA. Where Federal funding is sought, requests for project grants must be submitted to the FAA Airports Division Office in Fort Worth, Texas.

The City of Farmington, New Mexico submitted to the FAA on December 26, 2001, the noise exposure maps, descriptions, and other documentation produced during the noise compatibility planning study conducted from August 10, 1999 through March 28 2002. The City of Farmington noise exposure maps were determined by FAA to be in compliance with applicable requirements on January 9, 2002. Notice of this determination was published in the **Federal Register** on March 1, 2002.

The Noise Compatibility Program Study contains a proposed noise compatibility program comprised of actions designed for phased implementation by airport management and adjacent jurisdictions from the date of study completion to the year 2007. It was requested that the FAA evaluate and approve this material as a noise compatibility program as described in Title 49. The FAA began its review of the program on April 12, 2002 and was required by provision of the Act to approve or disapprove the program within 180 days (other than the use of new flight procedures for noise control). Failure to approve or disapprove such program within the 180-day period shall be deemed to be an approval of such program.

The submitted program contained six proposed actions for noise mitigation (on and/or off) the airport. The FAA completed its review and determined that the procedural and substantive requirements of Title 49 and FAR Part 150 have been satisfied. The overall program, therefore, was approved by the Administrator or effective July 8, 2002.

Outright approval was granted for five of the six specific program elements. Elements #1 and #3 involved changes in utilization and improvements to engine run-up areas; Element #4 addressed use of general aviation noise abatement procedures; Element #5 involved land acquisition, avigation easements, and insultation options; and Element #6 addressed extension of noise contour zone 2. Element #2 was disapproved pending submission of additional information addressing utilization of other airports in the area.

These determination are set forth in detail in a Record of Approval endorsed by the Administrator on July 8, 2002. The Record of Approval, as well as other evaluation materials and the documents comprising the submittal, are available at the FAA office listed above and at the administrative offices of the City of Farmington, New Mexico.

Issued in Fort Worth, Texas, July 25, 2002.

Naomi L. Saunders,

Manager, Airports Division.

[FR Doc. 02–19559 Filed 8–1–02; 8:45 am]

BILLING CODE 4910–13–M

DEPARTMENT OF TRANSPORTATION

Federal Aviation Administration

Noise Exposure Map Notice; Port Columbus International Airport Columbus, Ohio

AGENCY: Federal Aviation Administration, DOT.

ACTION: Notice.

SUMMARY: The Federal Aviation Administration (FAA) announces its determination that the noise exposure maps submitted by the Columbus Municipal Airport Authority for Port Columbus International Airport under the provisions of Title I of the Aviation Safety and Noise Abatement Act of 1979 (Public Law 96–193) and 14 CFR part 150 are in compliance with applicable requirements.

EFFECTIVE DATES: The effective date of the FAA's determination on the noise exposure maps is July 8, 2002.

FOR FURTHER INFORMATION CONTACT: Mary Jagiello, Federal Aviation Administration, Great Lakes Region, Detroit Airports District Office, DET ADO–AGL 670.1, Willow Run Airport, East, 8820 Beck Road, Belleville, Michigan 48111, (734) 487–7296.

SUPPLEMENTARY INFORMATION: This notice announces that the FAA finds that the noise exposure maps submitted for Port Columbus International Airport are in compliance with applicable requirements of Part 150, effective July 8, 2002.

Under section 103 of the Aviation Safety and Noise Abatement Act of 1979 (hereinafter referred to as ''the Act''), an airport operator may submit to the FAA noise exposure maps which meet applicable regulations and which depict

non-compatible land uses as of the date of submission of such maps, a description of projected aircraft operations, and the ways in which such operations will affect such maps. The Act requires such maps to be developed in consultation with interested and affected parties in the local community, government agencies, and persons using the airport.

An airport operator who has submitted noise exposure maps that are found by the FAA to be in compliance with the requirements of Federal Aviation Regulations (FAR) Part 150, promulgated pursuant to Title I of the Act, may submit a noise compatibility program for FAA approval which sets forth the measures the operator has taken or propose for the reduction of existing non-compatible uses and for the prevention of the introduction of additional non-compatible uses.

The FAA has completed its review of the noise exposure maps and related descriptions submitted by the Columbus Municipal Airport Authority. The specific maps under consideration are Exhibit 8, ''Existing (2001) Noise Exposure Map,'' and Exhibit 6, ''Future (2006) Noise Exposure Map'' in the submission. The FAA ha determined that these maps for Port Columbus International Airport are in compliance with applicable requirements. This determination is effective on July 8, 2002. The FAA's determination on an airport operator's noise exposure maps is limited to a finding that the maps were developed in accordance with the procedures contained in appendix A of FAR part 150. Such determination does not constitute approval of the applicant's data, information or plans, or a commitment to approve a noise compatibility program or to fund the implementation of that program.

If questions arise concerning the precise relationship of specific properties to noise exposure contours depicted on a noise exposure map submitted under section 103 of the Act, it should be noted that the FAA is not involved in any way in determining the relative locations of specific properties with regard to the depicted noise contours, or in interpreting the noise exposure maps to resolve questions concerning, for example, which properties should be covered by the provisions of section 107 of the Act. These functions are inseparable from the ultimate land use control and planning responsibilities of local government. These local responsibilities are not changed in any way under Part 150 or through the FAA's review of noise exposure maps. Therefore, the responsibility for the detailed overlaying of noise exposure contours onto the map depicting properties on the surface rests exclusively with the airport operator which submitted those maps, or with those public agencies and planning agencies with which consultation is required under section 103 of the Act. The FAA has relied on the certification by the airport operator, under section 150.12 of FAR Part 150, that the statutorily required consultation has been accomplished.

Copies of the noise exposure maps and of the FAA's evaluation of the maps are available for examination at the following locations: Federal Aviation Administration, 800 Independence Avenue, SW., Room 617, Washington, DC 20591. Federal Aviation Administration, Great Lakes Region, Airports Division Office, 2300 East Devon Avenue, Room 261, Des Plaines, Illinois 60018. Federal Aviation Administration, Detroit Airports District Office, Willow Run Airport, East, 8820 Beck Road, Belleville, Michigan 48111. Mr. Bernard F. Meleski, Columbus Airport Authority, Port Columbus International Airport, 4600 International Gateway, Columbus, Ohio 43219.

Questions may be directed to the individual named above under the heading, **FOR FURTHER INFORMATION CONTACT.**

Issued in Belleville, Michigan, July 8, 2002.

Irene Porter,

Manager, Detroit Airports District Office, Great Lakes Region.

[FR Doc. 02–19560 Filed 8–1–02; 8:45 am]

BILLING CODE 4910–15–M

DEPARTMENT OF TRANSPORTATION

Federal Aviation Administration

[Summary Notice No. PE–2002–46]

Petitions for Exemption; Summary of Petitions Received

AGENCY: Federal Aviation Administration (FAA), DOT.

ACTION: Notice of petitions for exemption received.

SUMMARY: Pursuant to FAA's rulemaking provisions governing the application, processing, and disposition of petitions for exemption part 11 of Title 14, Code of Federal Regulations (14 CFR), this notice contains a summary of certain petitions seeking relief from specified requirements of 14 CFR. The purpose of this notice is to improve the public's awareness of, and participation in, this aspect of FAA's regulatory activities. Neither publication of this notice nor the inclusion or omission of information in the summary is intended to affect the legal status of any petition or its final disposition.

DATES: Comments on petitions received must identify the petition docket number involved and must be received on or before August 22, 2002.

ADDRESSES: Send comments on any petition to the Docket Management System, U.S. Department of Transportation, Room Plaza 401, 400 Seventh Street, SW., Washington, DC 20590–0001. You must identify the docket number FAA–200X–XXXXX at the beginning of your comments. If you wish to receive confirmation that FAA received your comments, include a self-addressed, stamped postcard.

You may also submit comments through the Internet to *http://dms.dot.gov.* You may review the public docket containing the petition, any comments received, and any final disposition in person in the Dockets Office between 9 a.m. and 5 p.m., Monday through Friday, except Federal holidays. The Dockets Office (telephone 1–800–647–5527) is on the plaza level of the NASSIF Building at the Department of Transportation at the above address. Also, you may review public dockets on the Internet at *http://dms.dot.gov.*

FOR FURTHER INFORMATION CONTACT: Sandy Buchanan-Sumter, Office of Rulemaking (ARM–1), Federal Aviation Administration, 800 Independence Avenue, SW., Washington, DC 20591. Tel. (202) 267–7271.

This notice is published pursuant to 14 CFR 11.85 and 11.91.

Issued in Washington, DC, on July 30, 2002.

Donald P. Byrne,

Assistant Chief Counsel for Regulations.

Petitions for Exemption

Docket No.: FAA–2002–12534.

Petitioner: University of Illinois at Urbana-Champaign.

Section of 14 CFR Affected: 14 CFR 141.55(d)(3), 141.55(e)(4) and 141.63(b).

Description of Relief Sought: To permit the University of Illinois at Urbana-Champaign to hold examining authority for its FAA-approved training courses that do not meet the minimum ground and flight training time requirements of part 141.

[FR Doc. 02–19558 Filed 8–1–02; 8:45 am]

BILLING CODE 4910–13–P

DEPARTMENT OF TRANSPORTATION

Federal Aviation Administration

RTCA Program Management Committee

AGENCY: Federal Aviation Administration (FAA), DOT.

ACTION: Notice of RTCA Program Management Committee meeting.

SUMMARY: The FAA is issuing this notice to advise the public of a meeting of the RTCA Program Management Committee.

DATES: The meeting will be held August 27, 2002 starting at 9 a.m.

ADDRESSES: The meeting will be held at RTCA, Inc., 1828 L Street, NW, Suite 805, Washington, DC, 20036.

FOR FURTHER INFORMATION CONTACT: RTCA Secretariat, 1828 L Street, NW, Suite 850, Washington, DC, 20036; telephone (202) 833–9339; fax (202) 833–9434; Web site *http://www.rtca.org*.

SUPPLEMENTARY INFORMATION: Pursuant to section 10(a)(2) of the Federal Advisory Committee Act, (Pub. L. 92–463, 5 U.S.C., Appendix 2), notice is hereby given for a Program Management Committee meeting. The agenda will include:

- Opening Session (Welcome and Introductory Remarks, Review/Approve Summary of Previous Meeting)
- Publication Consideration/ Approval:
- Final Draft, *Minimum Operational Performance Standards for Universal Access Transceiver (UAT) Automatic Dependent Surveillance Broadcast (ADS–B)*, RTCA Paper No. 182–02/ PMC–224, prepared by SC–186.
- Final Draft, Change 2 to DO–224A, *Signal-in-Space Minimum Aviation System Performance Standards (MASPS) for Advanced VHF Digital Data Communications Including Compatibility with Digital Voice Techniques,* RTCA Paper No. 180–02/ PMC–223, prepared by SC–172.
- Final Draft, DO–271A, *Minimum Operational Performance Standards (MOPS) for Aircraft VDL Mode 3 Transceiver Operating in the Frequency Range 117.975–137.000MHz,* prepared by SC–172, RTCA Paper No. 178–02/ PMC–222.
- Discussion:
- Special Committee Chairman's Reports
- Action Item Review:
- Review/Status—All Open Action Items
- Other Business:
- Eurocontrol 8.33 kHz Vertical Expansion Study Report
- AOC Messages, Hazards and Procedural Mitigation
- Closing Session (Other Business, Document Production, Date and Place of Next Meeting, Adjourn)

Attendance is open to interested public but limited to space availability. With the approval of the chairmen, members of the public may present oral statements at the meeting. Persons wishing to present statements or obtain information should contact the person listed in the **FOR FURTHER INFORMATION CONTACT** section. Members of the public may present a written statement to the committee at any time.

Issued in Washington, DC, on July 25, 2002.

Janice L. Peters,

FAA Special Assistant, RTCA Advisory Committee.

[FR Doc. 02–19561 Filed 8–1–02; 8:45 am]

BILLING CODE 4910–13–M

DEPARTMENT OF TRANSPORTATION

Federal Highway Administration

Environmental Impact Statement: Dallas and Ellis Counties, Texas

AGENCY: Federal Highway Administration (FHWA), DOT.

ACTION: Notice of Intent.

SUMMARY: The FHWA is issuing this notice to advise the public that an environmental impact statement will be prepared for a proposed transportation project in Dallas and Ellis Counties, Texas.

FOR FURTHER INFORMATION CONTACT: Mr. Patrick Bauer, P.E., District Engineer, Federal Highway Administration, 300 East 8th Street, Room 826, Austin, Texas 78701, Telephone 512–536–5950.

SUPPLEMENTARY INFORMATION: The FHWA, in cooperation with the Texas Department of Transportation (TxDOT) and the Dallas County Department of Public Works, will prepare an environmental impact statement (EIS) on the proposal to build Loop 9, a new location highway, from S.H. 360 to I.H. 20 in Southern Dallas and Northern Ellis Counties.

The study corridor is approximately 40 miles in length. From a regional and local perspective, there is a demand for additional east-west transportation capacity and access throughout the limits of the corridor. Over the last 30 years, this area has experienced tremendous growth and has more than quadrupled in population.

As directed by the Transportation Efficiency Act for the 21st Century (TEA–21), the Major Investment Study (MIS) will be integrated with the EIS. The Loop 9 facility is included in the Mobility 2025 Update: the Metropolitan Transportation Plan (MTP) for the Dallas-Fort Worth region, as a new location staged parkway calling for the preservation of right-of-way through this corridor. The environmental study will examine viable alternatives and potential transportation modes including the No-Build; Transportation Systems Management/Congestion Management Systems; controlled access freeway; and other potential options. It will also include extensive and continuous public involvement to address the long-term mobility needs of both the region and local communities. The environmental study will include the determination of the number of lanes (four to six are anticipated), roadway configuration, and operational characteristics. It will also include a discussion of the effects on the social, economic, and natural environments and of other known and reasonably foreseeable agency actions proposed within the Loop 9 study corridor.

Letters describing the proposed action and soliciting comments will be sent to appropriate Federal, State, and local agencies, and to private organizations and citizens who have previously expressed an interest or are known to have an interest in this proposal. A public scoping meeting is planned for the summer of 2002. The date will be announced locally at a later time. This will be the first in a series of meetings to solicit public comments on the proposed action during the National Environmental Policy Act (NEPA) process. In addition, a public hearing will be held. Public notice will be given of the time and place of the meetings and the hearing. The Draft EIS will be available for public and agency review and comment before the public hearing.

To ensure that the full range of issues related to this proposed action are addressed and all significant issues identified, comments and suggestions are invited from all interested parties. Comments or questions concerning this proposed action and the EIS should be directed to the FHWA at the address provided above.

(Catalogue of Federal Domestic Assistance Program Number 20.205, Highway Planning and Construction. The regulations implementing Executive Order 12372 regarding intergovernmental consultation on Federal programs and activities apply to this program.)

Issued on: July 25, 2002.

Patrick A. Bauer,

District Engineer, Austin, Texas.

[FR Doc. 02–19541 Filed 8–1–02; 8:45 am]

BILLING CODE 4910–22–M

DEPARTMENT OF TRANSPORTATION

Maritime Administration

[Docket Number: MARAD–2002–12978]

Requested Administrative Waiver of the Coastwise Trade Laws

AGENCY: Maritime Administration, Department of Transportation.

ACTION: Invitation for public comments on a requested administrative waiver of the Coastwise Trade Laws for the vessel FANTASIA.

SUMMARY: As authorized by Public Law 105–383, the Secretary of Transportation, as represented by the Maritime Administration (MARAD), is authorized to grant waivers of the U.S.-build requirement of the coastwise laws under certain circumstances. A request for such a waiver has been received by MARAD. The vessel, and a description of the proposed service, is listed below. Interested parties may comment on the effect this action may have on U.S. vessel builders or businesses in the U.S. that use U.S.-flag vessels. If MARAD determines that in accordance with Public Law 105–383 and MARAD's regulations at 46 CFR part 388 (65 FR 6905; February 11, 2000) that the issuance of the waiver will have an unduly adverse effect on a U.S.-vessel builder or a business that uses U.S.-flag vessels, a waiver will not be granted.

DATES: Submit comments on or before September 3, 2002.

ADDRESSES: Comments should refer to docket number MARAD–2002–12978. Written comments may be submitted by hand or by mail to the Docket Clerk, U.S. DOT Dockets, Room PL–401, Department of Transportation, 400 7th St., SW., Washington, DC 20590–0001. You may also send comments electronically via the Internet at *http://dmses.dot.gov/submit/.* All comments will become part of this docket and will be available for inspection and copying at the above address between 10 a.m. and 5 p.m., E.T., Monday through Friday, except federal holidays. An electronic version of this document and all documents entered into this docket is available on the World Wide Web at *http://dms.dot.gov.*

FOR FURTHER INFORMATION CONTACT: Kathleen Dunn, U.S. Department of Transportation, Maritime Administration, MAR–832 Room 7201, 400 Seventh Street, SW., Washington, DC 20590. Telephone 202–366–2307.

SUPPLEMENTARY INFORMATION: Title V of Public Law 105–383 provides authority to the Secretary of Transportation to administratively waive the U.S.-build requirements of the Jones Act, and other statutes, for small commercial passenger vessels (no more than 12 passengers). This authority has been delegated to the Maritime Administration per 49 CFR 1.66, Delegations to the Maritime Administrator, as amended. By this notice, MARAD is publishing information on a vessel for which a request for a U.S.-build waiver has been received, and for which MARAD requests comments from interested parties. Comments should refer to the docket number of this notice and the vessel name in order for MARAD to properly consider the comments. Comments should also state the commenter's interest in the waiver application, and address the waiver criteria given in § 388.4 of MARAD'S regulations at 46 CFR part 388.

Vessel Proposed for Waiver of the U.S.-build Requirement

(1) Name of vessel and owner for which waiver is requested. Name of vessel: FANTASIA. Owner: Roger J. Taylor.

(2) Size, capacity and tonnage of vessel. According to the applicant: ''Size is 50.7, capacity is eleven persons and the tonnage is gross 22GRT, Net 19NRT.'' ''Breath: 14.1 ft. and Depth: 6.2 ft.''

(3) Intended use for vessel, including geographic region of intended operation and trade. According to the applicant: The intended use for the vessel is occasional chartering for hire in and around the Hawaiian Islands.''

(4) Date and Place of construction and (if applicable) rebuilding. Date of construction: 1982. Place of construction: Taipei, Taiwan.

(5) A statement on the impact this waiver will have on other commercial passenger vessel operators. According to the applicant: ''The impact to other commercial passenger vessel operators will be slim to none. To my knowledge there are no other sailboats being offered for charter on an occasional basis in the Hawaiian waters.''

(6) A statement on the impact this waiver will have on U.S. shipyards. According to the applicant: ''I believe this waiver will be of benefit to U.S. shipyards as it may create more demand in the future.''

Dated: July 30, 2002.

By order of the Maritime Administrator.

Joel C. Richard,

Secretary, Maritime Administration.

[FR Doc. 02–19590 Filed 8–1–02; 8:45 am]

BILLING CODE 4910–81–P

DEPARTMENT OF TRANSPORTATION

Maritime Administration

[Docket Number: MARAD–2002–12977]

Requested Administrative Waiver of the Coastwise Trade Laws

AGENCY: Maritime Administration, Department of Transportation.

ACTION: Invitation for public comments on a requested administrative waiver of the Coastwise Trade Laws for the vessel STEPHANIE ANN.

SUMMARY: As authorized by Pub. L. 105–383, the Secretary of Transportation, as represented by the Maritime Administration (MARAD), is authorized to grant waivers of the U.S.-build requirement of the coastwise laws under certain circumstances. A request for such a waiver has been received by MARAD. The vessel, and a description of the proposed service, is listed below. Interested parties may comment on the effect this action may have on U.S. vessel builders or businesses in the U.S. that use U.S.-flag vessels. If MARAD determines that in accordance with Pub. L. 105–383 and MARAD's regulations at 46 CFR part 388 (65 FR 6905; February 11, 2000) that the issuance of the waiver will have an unduly adverse effect on a U.S.-vessel builder or a business that uses U.S.-flag vessels, a waiver will not be granted.

DATES: Submit comments on or before September 3, 2002.

ADDRESSES: Comments should refer to docket number MARAD–2002–12977. Written comments may be submitted by hand or by mail to the Docket Clerk, U.S. DOT Dockets, Room PL–401, Department of Transportation, 400 7th St., SW, Washington, DC 20590–0001. You may also send comments electronically via the Internet at *http://dmses.dot.gov/submit/.* All comments will become part of this docket and will be available for inspection and copying at the above address between 10 a.m. and 5 p.m., E.T., Monday through Friday, except federal holidays. An electronic version of this document and all documents entered into this docket is available on the World Wide Web at *http://dms.dot.gov.*

FOR FURTHER INFORMATION CONTACT: Kathleen Dunn, U.S. Department of Transportation, Maritime Administration, MAR–832 Room 7201, 400 Seventh Street, SW., Washington, DC 20590. Telephone 202–366–2307.

SUPPLEMENTARY INFORMATION: Title V of Public Law 105–383 provides authority to the Secretary of Transportation to administratively waive the U.S.-build

requirements of the Jones Act, and other statutes, for small commercial passenger vessels (no more than 12 passengers). This authority has been delegated to the Maritime Administration per 49 CFR 1.66, Delegations to the Maritime Administrator, as amended. By this notice, MARAD is publishing information on a vessel for which a request for a U.S.-build waiver has been received, and for which MARAD requests comments from interested parties. Comments should refer to the docket number of this notice and the vessel name in order for MARAD to properly consider the comments. Comments should also state the commenter's interest in the waiver application, and address the waiver criteria given in § 388.4 of MARAD'S regulations at 46 CFR part 388.

Vessel Proposed for Waiver of the U.S.-build Requirement

(1) Name of vessel and owner for which waiver is requested.

Name of vessel: STEPHANIE ANN. *Owner:* Brian P. Sweeney.

(2) Size, capacity and tonnage of vessel. *According to the applicant:* ''Length 70 ft., Beam 23 ft., Draft 10 ft., Gross Tonnage 85, Net Tonnage 68.''

(3) Intended use for vessel, including geographic region of intended operation and trade. *According to the applicant:* ''Occasional charters along the west coast of the U.S.; we are expecting to do this a total of two (2) to four (4) weeks a year. Additionally, chartering in the Gulf of Mexico and along the Eastern Seaboard; we are expecting to do this one (1) or two (2) weeks every few years. Therefore we are requesting a waiver that is valid in all the U.S. waters. Intended operations will be mainly the west coast of the United States, from the Canadian border to the Mexican border, more specifically from the Seattle and the San Juan Islands south to San Diego Bay. Additionally, on occasion, once every few years, it is our intention that the boat will be in the Gulf of Mexico and the western seaboard. Therefore we are requesting a waiver that would be valid in all U.S. waters.''

(4) Date and Place of construction and (if applicable) rebuilding. *Date of construction:* 1998. *Place of construction:* Viareggio (Lucca), Italy.

(5) A statement on the impact this waiver will have on other commercial passenger vessel operators. *According to the applicant:* ''Given that we are expecting to charter the vessel for only two to four weeks a year, twelve (12) or less passengers, interested in longer day, or coastal cruises, the approval of this application will not have an adverse effect on existing passenger operators. This lack of impact is further supported given the large geographic region for which we are requesting the waiver; since the boat will only be available for charter two (2) to four (4) weeks of the entire year it is very unlikely that a charter each will originate multiple times from any one particular port and thus should have no effect on other commercial passenger vessel operators.''

(6) A statement on the impact this waiver will have on U.S. shipyards. *According to the applicant:* ''This waiver will have no adverse effect on U.S. Shipyards; it in fact has a very positive fiscal impact. In the last twelve (12) months approximately $250,000.00 has been spent on maintaining and upgrading the vessel all of which was done in U.S. (San Diego) Shipyards. All maintenance and additional work on the vessel will be carried out in U.S. Shipyards.''

Dated: July 30, 2002.

By order of the Maritime Administrator.

Joel C. Richard,

Secretary, Maritime Administration.

[FR Doc. 02–19592 Filed 8–1–02; 8:45 am]

BILLING CODE 4910–81–P

DEPARTMENT OF TRANSPORTATION

Maritime Administration

[Docket Number: MARAD–2002–12725]

Requested Administrative Waiver of the Coastwise Trade Laws

AGENCY: Maritime Administration, Department of Transportation.

ACTION: Invitation for public comments on a requested administrative waiver of the Coastwise Trade Laws for the vessel THORR with expanded geographic area of operation.

SUMMARY: As authorized by Public Law 105–383, the Secretary of Transportation, as represented by the Maritime Administration (MARAD), is authorized to grant waivers of the U.S.-build requirement of the coastwise laws under certain circumstances. A request for such a waiver was initially received by MARAD and noticed by **Federal Register** on July 12, 2002 (Vol. 67, No. 134, page 46246). By further submission the applicant has amended the proposed geographic area of operation and this notice supercedes the original request and extends the comment period. The vessel, and a description of the proposed service, is listed below. Interested parties may comment on the effect this action may have on U.S. vessel builders or businesses in the U.S. that use U.S.-flag vessels. If MARAD determines that in accordance with Public Law 105–383 and MARAD's regulations at 46 CFR part 388 (65 FR 6905; February 11, 2000) that the issuance of the waiver will have an unduly adverse effect on a U.S.-vessel builder or a business that uses U.S.-flag vessels, a waiver will not be granted.

DATES: Submit comments on or before September 3, 2002.

ADDRESSES: Comments should refer to docket number MARAD–2002–12725. Written comments may be submitted by hand or by mail to the Docket Clerk, U.S. DOT Dockets, Room PL–401, Department of Transportation, 400 7th St., SW., Washington, DC 20590–0001. You may also send comments electronically via the Internet at *http://dmses.dot.gov/submit/.* All comments will become part of this docket and will be available for inspection and copying at the above address between 10 a.m. and 5 p.m., E.T., Monday through Friday, except federal holidays. An electronic version of this document and all documents entered into this docket is available on the World Wide Web at *http://dms.dot.gov.*

FOR FURTHER INFORMATION CONTACT: Kathleen Dunn, U.S. Department of Transportation, Maritime Administration, MAR–832 Room 7201, 400 Seventh Street, SW., Washington, DC 20590. Telephone 202–366–2307.

SUPPLEMENTARY INFORMATION: Title V of Public Law 105–383 provides authority to the Secretary of Transportation to administratively waive the U.S.-build requirements of the Jones Act, and other statutes, for small commercial passenger vessels (no more than 12 passengers). This authority has been delegated to the Maritime Administration per 49 CFR § 1.66, Delegations to the Maritime Administrator, as amended. By this notice, MARAD is publishing information on a vessel for which a request for a U.S.-build waiver has been received, and for which MARAD requests comments from interested parties. Comments should refer to the docket number of this notice and the vessel name in order for MARAD to properly consider the comments. Comments should also state the commenter's interest in the waiver application, and address the waiver criteria given in § 388.4 of MARAD'S regulations at 46 CFR part 388.

Vessel Proposed for Waiver of the U.S.-Build Requirement

(1) Name of vessel and owner for which waiver is requested. Name of vessel: THORR. Owner: Mark S. Kulstad.

(2) Size, capacity and tonnage of vessel. According to the applicant:

''44′2″ LWL, 50′6″ LOD, 41 gross tons, 33 net tons.''

(3) Intended use for vessel, including geographic region of intended operation and trade. According to the applicant: ''The geographic region of intended use of the vessel for which waiver is being requested is Coastwise USA and Territories, with primary use between the West Coast of the United States and Seward Alaska. I intended to use THORR as my private yacht and offer one to two couples to share in that experience for a charter fee, within the region. I will charter on weekends and days off until my retirement in 5–10 years at which time I will begin to cruise the world.''

(4) Date and Place of construction and (if applicable) rebuilding. Date of construction: 1997. Place of construction: Taipei, Taiwan.

(5) A statement on the impact this waiver will have on other commercial passenger vessel operators. According to the applicant: ''None to minimal. There are no known boats operating in the region that do trips for just one to two couples. To the extent that there may be others, in fact that there will only be one to two couples on the boats means that the impact on others will be minimal to non existent.''

(6) A statement on the impact this waiver will have on U.S. shipyards. According to the applicant: ''The issuing of this waiver will have no impact on U.S. shipyards. No U.S. shipyard markets a yacht less that 50 foot, capable of crossing an ocean, for an owner who wants to take the occasional guest for charter.''

Dated: July 30, 2002.

By order of the Maritime Administrator.

Joel C. Richard,

Secretary, Maritime Administration.

[FR Doc. 02–19591 Filed 8–1–02; 8:45 am]

BILLING CODE 4910–81–P

DEPARTMENT OF TRANSPORTATION

National Highway Traffic Safety Administration

[Docket No. NHTSA 2002–11882; Notice 2]

Michelin North America, Inc., Grant of Application for Decision of Inconsequential Noncompliance

Michelin North America, Inc., (Michelin) has determined that approximately 385 275/80 R–22.5 Michelin PXZE TL LRG tires do not meet the labeling requirements mandated by Federal Motor Vehicle Safety Standard (FMVSS) No. 119, ''New pneumatic tires for vehicles other than passenger cars.'' Pursuant to 49 U.S.C. 30118(d) and 30120(h), Michelin has petitioned for a determination that this noncompliance is inconsequential to motor vehicle safety and has filed an appropriate report pursuant to 49 CFR part 573, ''Defect and Noncompliance Reports.''

Notice of receipt of the application was published, with a 30-day comment period, on April 2, 2002, in the **Federal Register** (67 FR 15672). NHTSA received no comments.

During the period of the 42nd week through the 44th week of 2001, the Kentville, Nova Scotia, Canada plant of Michelin North America (Canada) Inc., produced tires where, on one side of the tire, the tire inflation pressure information was omitted. This condition does not meet the labeling requirements of FMVSS No. 119, S6.5(d) as the incorrectly marked tires read:

Max Load Single 2800 kg (6175 lbs) 2800 kg (6175 lbs)
Max Load Dual 2575 kg (5675 lbs) 2575 kg (5675 lbs)

Instead of:

Max Load Single 2800kg (6175 lbs) at 760 kPa (110 psi) cold
Max Load Dual 2575 kg (5675 lbs) at 760 kPa (110 psi) cold

Of the 385 noncompliant tires, approximately 283 tires may have been delivered to end-users. The remaining tires have been isolated in Michelin's warehouses and will be brought into full compliance with the requirement of FMVSS No. 119 or scrapped.

Michelin does not believe that this marking error will impact motor vehicle safety because the tires meet all other Federal motor vehicle safety performance standards. The routine source of tire inflation pressure is not the tire sidewall marking. Typically the proper inflation pressures are obtained from the vehicle placard, the vehicle owner's manual, or tire industry standards publications. Thus, the proper inflation is readily available to the user.

The agency believes the true measure of inconsequentiality with respect to the noncompliance with FMVSS No. 119, paragraph S6.5, is whether the consumer can reference the maximum load rating and corresponding inflation pressure information for a particular tire. In the case of this noncompliance, the information is marked correctly on one side of the tire while the opposite side has the maximum load stated twice with no corresponding inflation pressure. The consumer can determine the recommended inflation by referring to the fully marked side of the tire if it is facing outwards or from the other sources cited in the preceding paragraph if the fully marked side it is not facing outwards.

In consideration of the foregoing, NHTSA has decided that the applicant has met its burden of persuasion that the noncompliance described is inconsequential to motor vehicle safety. Accordingly, Michelin's application is hereby granted, and the applicant is exempted from the obligation of providing notification of, and a remedy for, the noncompliance.

(49 U.S.C. 301118, 301120; delegations of authority at 49 CFR 1.50 and 501.8)

Issued on: July 30, 2002.

Stephen R. Kratzke,

Associate Administrator for Safety Performance Standards.

[FR Doc. 02–19551 Filed 8–1–02; 8:45 am]

BILLING CODE 4910–59–P

DEPARTMENT OF TRANSPORTATION

Surface Transportation Board

[STB Docket No. AB–55 (Sub–No. 621X)]

CSX Transportation, Inc. Abandonment Exemption in Marion County, IN

CSX Transportation, Inc. (CSXT) has filed a notice of exemption under 49 CFR 1152 Subpart F—*Exempt Abandonments* to abandon a 0.61-mile portion of its Sequoia Supply Industrial Track extending from milepost BD–127.19, at the east side of Holmes Street (marked on the ground as milepost BD–126.9), to milepost BD–127.80 (end of track), in Indianapolis, Marion County, IN. The line traverses United States Postal Service Zip Code 46222.

CSXT has certified that: (1) No local traffic has moved over the line for at least 2 years; (2) there is no overhead traffic on the line; (3) no formal complaint filed by a user of rail service on the line (or by a state or local government entity acting on behalf of such user) regarding cessation of service over the line either is pending with the Surface Transportation Board (Board) or with any U.S. District Court or has been decided in favor of complainant within the 2-year period; and (4) the requirements at 49 CFR 1105.7 (environmental reports), 49 CFR 1105.8 (historic reports), 49 CFR 1105.11 (transmittal letter), 49 CFR 1105.12 (newspaper publication), and 49 CFR 1152.50(d)(1) (notice to governmental agencies) have been met.

As a condition to this exemption, any employee adversely affected by the abandonment shall be protected under *Oregon Short Line R. Co.—Abandonment—Goshen,* 360 I.C.C. 91 (1979). To address whether this

condition adequately protects affected employees, a petition for partial revocation under 49 U.S.C. 10502(d) must be filed. Provided no formal expression of intent to file an offer of financial assistance (OFA) has been received, this exemption will be effective on September 3, 2002, unless stayed pending reconsideration. Petitions to stay that do not involve environmental issues,[1] formal expressions of intent to file an OFA under 49 CFR 1152.27(c)(2),[2] and trail use/rail banking requests under 49 CFR 1152.29 must be filed by August 12, 2002. Petitions to reopen or requests for public use conditions under 49 CFR 1152.28 must be filed by August 22, 2002, with: Surface Transportation Board, 1925 K Street, NW, Washington, DC 20423.

A copy of any petition filed with the Board should be sent to applicant's representative: Natalie S. Rosenberg, Counsel, CSX Transportation, Inc., 500 Water Street J150, Jacksonville, FL 32202.

If the verified notice contains false or misleading information, the exemption is void *ab initio.*

Applicant has filed an environmental report which addresses the abandonment's effects, if any, on the environment or historic resources. SEA will issue an environmental assessment (EA) by August 9, 2002. Interested persons may obtain a copy of the EA by writing to SEA (Room 500, Surface Transportation Board, Washington, DC 20423) or by calling SEA, at (202) 565–1552. Comments on environmental and historic preservation matters must be filed within 15 days after the EA becomes available to the public.

Environmental, historic preservation, public use, or trail use/rail banking conditions will be imposed, where appropriate, in a subsequent decision.

Pursuant to the provisions of 49 CFR 1152.29(e)(2), CSXT shall file a notice of consummation with the Board to signify that it has exercised the authority granted and fully abandoned the line. If consummation has not been effected by CSXT's filing of a notice of consummation by August 2, 2003, and there are no legal or regulatory barriers to consummation, the authority to abandon will automatically expire.

Board decisions and notices are available on our website at *http://www.stb.dot.gov.*

Decided: July 22, 2002.

By the Board, David M. Konschnik, Director, Office of Proceedings.

Vernon A. Williams,

Secretary.

[FR Doc. 02–19075 Filed 8–1–02; 8:45 am]

BILLING CODE 4915–00–P

[1] The Board will grant a stay if an informed decision on environmental issues (whether raised by a party or by the Board's Section of Environmental Analysis (SEA) in its independent investigation) cannot be made before the exemption's effective date. *See Exemption of Out-of-Service Rail Lines,* 5 I.C.C.2d 377 (1989). Any request for a stay should be filed as soon as possible so that the Board may take appropriate action before the exemption's effective date.

[2] Each offer of financial assistance must be accompanied by the filing fee, which is currently set at $1,100. *See* 49 CFR 1002.2(f)(25).

Federal Register

Friday,
August 2, 2002

Part II

Department of the Treasury

Internal Revenue Service

26 CFR Part 1

Exclusions From Gross Income of Foreign Corporations; Proposed Rule

DEPARTMENT OF THE TREASURY

Internal Revenue Service

26 CFR Part 1

[REG–208280–86; REG–136311–01]

RIN 1545–AJ57; RIN 1545–BA07

Exclusions From Gross Income of Foreign Corporations

AGENCY: Internal Revenue Service (IRS), Treasury.

ACTION: Withdrawal of previously proposed rules; notice of proposed rulemaking; and notice of public hearing.

SUMMARY: This document contains new proposed rules implementing the portions of sections 883(a) and (c) of the Internal Revenue Code of 1986, as amended, that relate to the exclusion from gross income available to corporations organized in foreign countries that grant equivalent exemptions to corporations organized in the United States for income derived from the international operation of ships or aircraft. This document also provides notice of a public hearing on the proposed rules and withdraws the notice of proposed rulemaking (REG–208280–86) (65 FR 6065) published on February 8, 2000.

DATES: Written or electronic comments, requests to speak, and outlines of topics to be discussed at the public hearing scheduled for November 12, 2002, at 10 a.m. must be received by October 22, 2002. The proposed amendment to 26 CFR part 1 published on February 8, 2000 (65 FR 6065) is withdrawn as of August 2, 2002.

ADDRESSES: Send submissions to: CC:ITA:RU (REG–136311–01), room 5226, Internal Revenue Service, POB 7604, Ben Franklin Station, Washington, DC 20044. Submissions may be hand delivered Monday through Friday between the hours of 8 a.m. and 5 p.m. to: CC:ITA:RU (REG–136311–01), Courier's Desk, Internal Revenue Service, 1111 Constitution Avenue, NW., Washington, DC. Alternatively, comments may be transmitted electronically via the Internet by submitting comments directly to the IRS Internet site at: *http://www.irs.gov/regs*. The public hearing will be held in room 4718, Internal Revenue Building, 1111 Constitution Avenue, NW., Washington, DC.

FOR FURTHER INFORMATION CONTACT: Concerning the proposed rules, Patricia A. Bray, (202) 622–3880; concerning submissions, the hearing, and/or to be placed on the building access list to attend the hearing, Guy Traynor, (202) 622–7180 (not toll-free numbers).

SUPPLEMENTARY INFORMATION:

Paperwork Reduction Act

The collection of information contained in this notice of proposed rulemaking has been submitted to the Office of Management and Budget for review in accordance with the Paperwork Reduction Act of 1995 (44 U.S.C. 3507(d)). Comments on the collection of information should be sent to the Office of Management and Budget, Attn: Desk Officer for the Department of the Treasury, Office of Information and Regulatory Affairs, Washington, DC 20503, with copies to the IRS, Attn: IRS Reports Clearance Officer, W:CAR:MP:FP:S Washington, DC 20224. Comments on the collection of information should be received by October 1, 2002. Comments are specifically requested concerning:

Whether the proposed collection of information is necessary for the proper performance of the functions of the IRS, including whether the information will have practical utility;

The accuracy of the estimated burden associated with the proposed collection of information (see below);

How the quality, utility and clarity of the information to be collected may be enhanced;

How the burden of complying with the proposed collection of information may be minimized, including through the application of automated collection techniques or other forms of information technology; and

Estimates of capital or start-up costs and costs of operation, maintenance, and purchase of services to provide information.

The collection of information in this proposed regulation is in §§ 1.883–1, 1.883–2, 1.883–3. 1.883–4 and 1.883–5. The information required in these sections will enable a foreign corporation to determine if it is eligible to exclude its income from the international operation of a ship or ships or aircraft from gross income on its U.S. Federal income tax return. The information required in these sections will also enable the IRS to monitor compliance with the provisions of the proposed regulations with respect to the stock ownership requirements of § 1.883–1(c)(2), and to make a preliminary determination of whether the foreign corporation is eligible to claim such an exemption and is accurately reporting income as required under section 6012.

The collection of information and responses to these collections of information are mandatory. The likely respondents are foreign corporations engaged in the international operation of a ship or ships or aircraft that wish to claim an exemption from U.S. tax under section 883, and certain of their shareholders owning (directly or indirectly) a majority of the value of the shares of such corporations.

Estimated total annual reporting/recordkeeping burden on corporations: 1400 hours.

The estimated annual burden per respondent varies from 30 minutes to eight hours, depending on the circumstances of the foreign corporation, with an estimated average of one hour.

Estimated number of respondents: 1400.

Estimated annual frequency of responses: Once.

Estimated total annual reporting/recordkeeping burden on shareholders: 22,500 hours.

The estimated annual burden per respondent varies from zero minutes to eight hours, depending on the circumstances of the shareholder or intermediary, with an estimated average of 90 minutes.

Estimated number of respondents: 15,000.

Estimated annual frequency of responses: Zero if the shareholder falls within a special rule that permits the foreign corporation to use the address of record in the shareholder records.

Once every three years if there is no change in reported shareholder information.

Annually in years in which a change of information occurs.

An agency may not conduct or sponsor, and a person is not required to respond to, a collection of information unless the collection of information displays a valid control number assigned by the Office of Management and Budget.

Books or records relating to a collection of information must be retained as long as their contents may become material in the administration of any internal revenue law. Generally, tax returns and tax return information are confidential, as required by 26 U.S.C. 6103.

Background and Explanation of Provisions

I. Overview

On February 8, 2000, the IRS and Treasury published a notice of proposed rulemaking (REG–208280–86) in the **Federal Register** (65 FR 6065) under sections 883(a) and (c) (the 2000 proposed regulations). The 2000 proposed regulations, in accordance

with section 883(a) and (c), generally provide that a foreign corporation organized in a qualified foreign country and engaged in the international operation of ships or aircraft shall exclude from its gross income for purposes of United States Federal income taxation qualified income it derives from its international operation of ships or aircraft, provided that the corporation satisfies certain ownership and related documentation and filing requirements. The 2000 proposed regulations explain how to determine whether a foreign country is a qualified foreign country, what income is considered qualified income, and what activities constitute international operation of ships or aircraft. They also specify how a foreign corporation satisfies the ownership and related documentation requirements.

The IRS and Treasury held a public hearing regarding the 2000 proposed regulations on June 8, 2000, and received numerous comments in connection with the hearing and otherwise. In consideration of the substantial number of comments received, and due to the significant impact the regulations have on large segments of the shipping and air transport industries, the IRS and Treasury believe it is appropriate to repropose the regulations in order to address those comments and to provide a further opportunity for comment both on the changes and more generally. Accordingly, this document withdraws the 2000 proposed regulations and provides new proposed regulations, which are referred to herein as the reproposed regulations.

Part II of this preamble discusses the principal differences between the 2000 proposed regulations and the reproposed regulations and the reasons changes have been made. Part II.A provides background. Part II.B addresses comments on the 2000 proposed regulations relating to § 1.883–1 (the general requirements for the exclusion). Part II.C addresses comments relating to § 1.883–2 (the publicly traded test). Part II.D addresses comments relating to § 1.883–3 (the CFC stock ownership test). Part II.E addresses comments relating to § 1.883–4 (the qualified shareholder stock ownership test). Finally, Part II.F addresses comments relating to § 1.883–5 (the effective date of the 2000 proposed regulations).

This preamble addresses each of the five sections of the reproposed regulations in order. Within each section, the preamble discusses first the most significant differences between the 2000 proposed regulations and the reproposed regulations, including: (1) The qualification of participation in a pool, partnership, strategic alliance, joint operating agreement, code-sharing arrangement or other joint venture as operation of ships or aircraft (*see* § 1.883–1(e)(1) and (2) and Part II.B.1 of this preamble); (2) the qualification of certain lightering activity as international operation of ships (*see* § 1.883–1(f)(2)(ii) and Part II.B.2 of this preamble); (3) the treatment of certain income attributable to the inland leg following the international carriage of passengers or cargo (*see* § 1.883–1(g)(1)(v) and (vi) and (g)(2)(vi) and Part II.B.2 of this preamble); (4) the treatment of income from certain container usage in the United States (*see* § 1.883–1(g)(1)(x) and (g)(2)(viii) and Part II.B.3 of this preamble)); and (5) the revision of certain aspects of the closely-held test for qualification of a foreign corporation as a publicly traded corporation (*see* § 1.883–2(d)(3) and Part II.C.2 of this preamble).

II. Section 883(a) and (c): Exclusions From Gross Income of Foreign Corporations

A. Background

The reproposed regulations provide (as do the 2000 proposed regulations) that, in general, qualified income derived by a qualified foreign corporation from its international operation of ships or aircraft is excluded from gross income and exempt from United States Federal income tax. Section 1.883–1 of both the 2000 proposed regulations and the reproposed regulations provide general operational rules and definitions to determine whether a foreign corporation is entitled to this exclusion and exemption, which are elaborated on in §§ 1.883–2 through 1.883–4. The preamble to the 2000 proposed regulations contains a detailed explanation of the provisions in the 2000 proposed regulations. That explanation is not repeated herein. Comments the IRS received on the 2000 proposed regulations and the consequent changes reflected in the reproposed regulations are described herein.

B. Comments Relating to § 1.883–1: Exclusions of Income From the International Operation of Ships or Aircraft

Section 1.883–1 of the 2000 proposed regulations provides, in accordance with section 883, that income derived from the international operation of ships or aircraft by a foreign corporation organized in a foreign country that grants a reciprocal exemption to U.S. corporations shall be exempt from U.S. Federal income tax. In response to comments the IRS received concerning the 2000 proposed regulations, the reproposed regulations modify the rules of the 2000 proposed regulations regarding the definition of *international operation of ships and aircraft* and the scope of income considered derived from such operation.

1. *Operation of ships or aircraft.* Section 1.883–1(e) of the 2000 proposed regulations provides generally that the term *operation of ships or aircraft* includes carriage of passengers or cargo for hire; time or voyage charter (full charter) of a ship, or wet lease of an aircraft; and bareboat charter of a ship, or dry lease of an aircraft. The 2000 proposed regulations also include within the term the active participation by a foreign corporation that is otherwise engaged in the operation of ships or aircraft in a pool, partnership, strategic alliance, joint operating agreement, code-sharing arrangements or other joint venture, that is itself engaged in the operation of ships or aircraft.

i. *Investment in a pool, partnership, strategic alliance, joint operating agreement, code-sharing arrangement or other joint venture.* Commentators suggested modifying the definition of *operation of ships or aircraft* to permit an investor in a pool, partnership, strategic alliance, joint operating agreement, code-sharing arrangement or other joint venture that is itself engaged in the operation of ships or aircraft to be treated as engaged in the operation of ships or aircraft, whether or not the investor is itself so engaged and whether or not its participation is active.

This suggestion has been generally adopted in the reproposed regulations, with modifications. Under § 1.883–1(e)(2) of the reproposed regulations, a foreign corporation is considered engaged in the operation of ships or aircraft with respect to its participation in a pool, partnership, strategic alliance, joint operating agreement, code-sharing arrangement or other joint venture, provided that such arrangement is a fiscally transparent entity under the income tax laws of the United States and that it would be considered engaged in the operation of ships or aircraft if it were a foreign corporation. Alternatively, if the pool, strategic alliance, joint operating agreement, code-sharing arrangement or other joint venture does not rise to the level of a partnership or other entity under the income tax laws of the United States (*e.g.*, it is a contractual arrangement only that involves the carriage of cargo or passengers for hire), a foreign

corporation that participates in such a pool, strategic alliance, joint operating agreement, code-sharing arrangement or other joint venture will be considered engaged in the operation of ships or aircraft only if the foreign corporation is otherwise engaged in the operation of ships or aircraft under paragraph (e)(1). Thus, through participation in a fiscally transparent entity, a foreign corporation may be considered engaged in the operation of ships or aircraft even if it is not itself otherwise engaged in the operation of ships or aircraft. However, through participation in a contractual arrangement that is not a fiscally transparent entity, a foreign corporation may only be considered engaged in the operation of ships or aircraft with respect to activities under such contractual arrangement only if the foreign corporation is otherwise engaged in the operation of ships or aircraft.

Section 1.883–1(e)(5)(iv) and (v) defines for these purposes the terms *entity* and *fiscally transparent entity under the income tax laws of the United States* respectively. In general, an entity is fiscally transparent under the income tax laws of the United States with respect to a category of income if the entity would be considered fiscally transparent under the income tax laws of the United States for purposes of § 1.894–1 with respect to an item of income within that category of income.

In the case of a foreign corporation that is considered engaged in the operation of ships or aircraft with respect to its participation in certain fiscally transparent entities, § 1.883–1(h)(3)(ii) provides an exception to the general rule that a foreign country that provides an exemption only through an income tax convention with the United States will not be considered to grant an equivalent exemption for purposes of section 883. Under the reproposed regulations, a foreign corporation will be treated as organized in a foreign country that grants an equivalent exemption for purposes of section 883 with respect to a category of income derived by or pursuant to a pool, partnership, strategic alliance, joint operating agreement, code-sharing arrangement or other joint venture, but only if treaty benefits are denied to the foreign corporation solely because the foreign corporate interest holder's jurisdiction (*i.e.*, the treaty-partner jurisdiction) views the pool, partnership, strategic alliance, joint operating agreement, code-sharing arrangement or other joint venture as not fiscally transparent.

ii. *Space or slot charters.* Commentators also suggested modifying the definition *operation of ships or aircraft* to include space or slot chartering, which involves the leasing out of a certain amount of space (but less than all of the space) on a ship or aircraft. In the context of passenger aircraft, such a charter may be referred to as a block seat sale or charter. In response to these comments and to clarify the concept of what it means for a foreign corporation to be engaged in the operation of ships or aircraft, the rules of the 2000 proposed regulations have been revised.

Section 1.883–1(e)(1) of the reproposed regulations provides generally that a foreign corporation is considered engaged in the operation of ships or aircraft only during the time it is an owner or lessee of an entire ship or aircraft and the foreign corporation (1) uses that ship or aircraft to carry passengers or cargo for hire; or (2) either (a) leases out the ship under a time or voyage charter (full charter), space or slot charter, or bareboat charter to a lessee or sublessee, provided the ship is used to carry passengers or cargo for hire; or (b) leases out the aircraft under a wet lease (full charter), space, slot, or block-seat charter, or dry lease to a lessee or sublessee, provided the aircraft is used to carry passengers or cargo for hire. In addition, § 1.883–1(g)(1)(ix) clarifies that a foreign corporation that is engaged in the international operation of ships or aircraft within the meaning of § 1.883–1(e) may derive income that is incidental to the operation ships or aircraft by arranging by means of a space or slot charter for the carriage of cargo listed on a bill of lading or airway bill issued by the foreign corporation on the ship or aircraft of another corporation engaged in the international operation of ships or aircraft.

Thus, the reproposed regulations generally adopt the commentators' recommendations regarding space or slot chartering. A foreign corporation that has an ownership interest in an entire ship or an aircraft will be considered engaged in the operation of ships or aircraft if it space or slot charters the ship or block-seat charters the aircraft to another corporation that uses the ship or aircraft to carry passengers or cargo for hire.

iii. *Non-vessel operating common carriers.* The 2000 proposed regulations do not include within the list of activities constituting the operation of ships or aircraft the activities of a non-vessel operating common carrier (an NVOCC). Commentators suggested that NVOCCs should be treated as engaged in the operation of ships because they are common carriers that issue bills of lading and have liability for the goods shipped under that bill of lading just as an ocean common carrier.

The reproposed regulations do not adopt this suggestion. An NVOCC is not engaged in the operation of ships within the meaning of § 1.883–1(e) because it does not own an entire ship or use it in one of the listed activities in § 1.883–1(e)(1). Section 883 does not apply simply because a corporation is a common carrier. Therefore, the activities of an NVOCC continue to be included on the § 1.883–1(e)(3) list of activities that do not constitute the operation of ships or aircraft.

2. *International operation of ships or aircraft.* i. *General definition.* Section 1.883–1(f) of the 2000 proposed regulations distinguishes the international operation of ships or aircraft from the domestic operation of ships or aircraft based largely upon the amendments made to section 863(c)(1) and (2) by the Technical and Miscellaneous Revenue Act of 1988 (TAMRA). In the legislative history to TAMRA, Congress directed that transportation income derived solely from sources within the United States (section 863(c)(1) income) should not be exempt from U.S. income tax under section 883. Congress further provided that transportation income derived 50 percent from sources within the United States (section 863(c)(2) income) should be eligible for exemption from U.S. income tax under section 883. See S. Rep. No. 100–445, 100th Cong., 2d Sess. 241–242 (1988).

Section 863(c)(1) income is defined as income attributable to transportation that begins and ends in the United States. Section 863(c)(2) income is defined as income attributable to transportation that begins or ends in the United States, and that is not section 863(c)(1) income. The 2000 proposed regulations adopt this distinction between section 863(c)(1) income and section 863(c)(2) income in defining the term *international operation* to mean the operation of ships or aircraft on voyages or flights that begin or end in the United States and correspondingly end or begin in a foreign country.

Commentators objected to this definition. Several argued that the term *international operation* should be defined coextensively with the term *international transport,* as used in Article 8 of the OECD Model Income Tax Convention and in the 1996 United States Model Income Tax Convention.

Nevertheless, the IRS and Treasury believe that Congress meant the definition of *international operation* to correspond with the definition of section 863(c)(2) income. Section 863(c)(2) does not apply to

transportation that begins and ends in the United States; it applies to transportation that begins or ends in the United States. Therefore, the reproposed regulations do not modify the definition of *international operation of ships or aircraft* to include transportation that begins and ends in the United States (such as the U.S. inland legs following international transport, discussed immediately below). The IRS and Treasury believe this interpretation to be consistent with the intent of Congress.

ii. *Inland leg of transportation.* The 2000 proposed regulations generally do not include within the definition of international operation the inland leg of transportation of passengers or cargo before or after an intermediate stop in the United States.

Commentators criticized the exclusion of the inland leg in the 2000 proposed regulations as inconsistent with long-standing industry practice and other provisions of domestic law, such as the Shipping Act of 1984, Public Law 98–237, 2 (97 Stat. 67) (March 20, 1984), as amended, Public Law 105–258, Title 1, 101 (112 Stat. 1902) (Oct. 14, 1998), which considers certain inland transportation to form a part of international service. Commentators also suggested that the 2000 proposed regulations contradicted the established U.S. transportation policy of promoting intermodal transportation (*i.e.,* transportation by more than one form of carrier during a single journey).

After reviewing these comments, the IRS and Treasury have determined not to change the definition of international operation of ships or aircraft in the reproposed regulations. As explained above, in Part II.B.2.i, the language of section 883 and the legislative history of TAMRA, in the view of IRS and Treasury, do not permit the inland leg of transportation to be considered international operation of ships or aircraft. In recognition of the need to promote efficient international transportation, however, the IRS and Treasury have amended the rules of the 2000 proposed regulations to include income with respect to certain inland transportation as income from an activity incidental to the international operation of ships or aircraft, and thus eligible for exemption. *See* Part II.B.3, below.

iii. *Cruises to nowhere.* The 2000 proposed regulations generally include within the definition of international operation a round trip cruise that begins in the United States, stops at a foreign port, and returns to the same or another US port. Because the 2000 proposed regulations require a stop at a foreign intermediate port, the 2000 proposed regulations effectively exclude from the definition of international operation of ships or aircraft a ''cruise to nowhere'' (*i.e.,* a cruise that begins and ends in the United States without stopping at a foreign port).

Several commentators criticized the exclusion of cruises to nowhere. The reproposed regulations, however, do not treat a cruise to nowhere as international operation of ships or aircraft. Although a cruise to nowhere travels beyond the U.S. territorial limits, its passengers may embark and disembark only in the United States. A cruise to nowhere begins and ends its voyage in the United States, within the meaning of section 863(c)(1), with respect to its passengers and thus should not constitute international operation of ships or aircraft.

iv. Lightering. The 2000 proposed regulations exclude from the definition of international operation the activities of a lighter vessel that carries cargo to, or picks up cargo from, a vessel located beyond the territorial limits of the United States, and correspondingly loads or unloads that cargo at a U.S. port.

Commentators recommended that lighter vessels that service host vessels engaged in international operation should be considered engaged in international operation. Commentators relied for support on § 1.954–6(b)(3)(iv), which treats a lighter vessel that services a host vessel used in foreign commerce as also used in foreign commerce for purposes of determining foreign base company shipping income.

While the IRS and Treasury did not adopt the commentators' approach, the reproposed regulations, unlike the 2000 proposed regulations, do not require that a ship be operated on voyages that begin or end in the United States and correspondingly end or begin in a foreign country. Instead, the reproposed regulations require simply that the ship or aircraft be operated on voyages or flights that begin or end in the United States and correspondingly end or begin outside the United States. In servicing a host vessel beyond the territorial limits of the United States, a lighter vessel begins its voyage outside the United States alongside the host vessel with respect to the cargo transported, and ends its voyage with respect to that cargo upon delivery of the cargo in the United States. Accordingly, under § 1.883–1(f)(2)(ii) of the reproposed regulations, lightering activity that extends beyond United States territorial waters will constitute the international operation of a ship.

3. *Activities Incidental to International Operation.* Section 1.883–1(g) of the 2000 proposed regulations provides that certain activities of an operator of a ship or aircraft are so closely related to the primary activity of the international operation of ships or aircraft that income from those incidental activities shall be considered income from the international operation of ships or aircraft, and thus eligible for exemption.

i. *Intermodal containers.* Section 1.883–1(g)(1)(v) of the 2000 proposed regulations provides that rental of containers during the international carriage of goods by sea by the operator of a ship or by air by the operator of an aircraft is incidental to the international operation of ships or aircraft. By contrast, § 1.883–1(g)(2)(iv) of the 2000 proposed regulations provides that the rental of containers for a domestic leg of transportation in connection with international carriage of cargo is not incidental to the international operation of ships or aircraft.

As discussed above in Part II.B.2(ii), the reproposed regulations do not change the general definition of the term *international operation of ships or aircraft* to cover the inland leg. The IRS and Treasury, however, recognize that intermodal transportation is a critical adjunct to the international transportation of cargo.

Accordingly, § 1.883–1(g)(1)(x) of the reproposed regulations treats certain container rental activities in the United States as incidental to the international operation of ships or aircraft. The reproposed regulations limit incidental treatment to the rental of containers for use in the United States for a period not exceeding five days beyond the original delivery date to the consignee as stated on the bill of lading. The reproposed regulations also impose other limitations on incidental treatment, and no other rental of containers within the United States is considered incidental to the international operation of ships or aircraft (*e.g.,* the extended rental of containers for use by the customer for temporary warehousing of cargo).

ii. *Inland legs of transportation—cargo transport.* As discussed above, the 2000 proposed regulations may treat some inland legs of transportation of cargo as domestic because the international transportation provided by a ship or aircraft is considered to end when the cargo is transferred from the ship or aircraft and clears customs or is considered to begin when the ship or aircraft is loaded at the United States port or airport. Again as discussed above, commentators argued that this rule inhibits intermodal transportation.

In recognition of this concern, § 1.883–1(g)(1)(v) of the reproposed regulations provides that (i) if a foreign corporation engaged in the international operation of ships or aircraft issues a through bill of lading, airway bill or similar document for the carriage of cargo from a port or airport outside the United States to an intermediate port or airport in the United States and then to an inland destination within the United States, or from an inland point of origin in the United States to an intermediate U.S. port or airport and then to a destination outside the United States, and (ii) to fulfill its common carrier obligations under the bill, the foreign corporation arranges through a related or unrelated corporation (either by subcontracting or otherwise) for carriage of cargo by air, ship, truck or rail between the U.S. port or airport and the inland point either preceding or following the international carriage of that cargo, then the activity of arranging for that transportation is incidental to its international operation of ships or aircraft, and income from such activity is thus eligible for exemption.

The reproposed regulations do not provide the same treatment where the bill of lading issued by the foreign corporation is solely for the international carriage of cargo between a U.S. port or airport where the cargo is loaded on or unloaded from the ship or aircraft and a point outside the United States. In such cases, arranging for further transportation of the cargo by another party on an inland leg is not incidental to the international operation of ships or aircraft. See § 1.883–1(g)(2)(vi). In addition, if the qualified foreign corporation carries cargo between a U.S. inland point and a U.S. port or airport with its own trucks, buses or rail service preceding or following the international carriage of such cargo by the qualified foreign corporation, the activity is not incidental to its international operation of ships or aircraft. See § 1.883–1(g)(2)(vii).

iii. *Inland legs of transportation—passenger transport under a code-sharing arrangement.* Under the 2000 proposed regulations, passenger carriage is deemed to begin or end upon a change of aircraft. Pursuant to that rule, international transportation provided by an air carrier ends when a passenger changes planes at a gateway city en route from a foreign point of origin to a U.S. destination, or begins when a passenger changes planes at a gateway city en route to a foreign destination. Thus, under the 2000 proposed regulations, an inland leg of passenger transportation is not treated as international even if it follows international transportation and is pursuant to a through ticket sold by a foreign airline, for example, under a code-sharing arrangement with a U.S. airline or is pursuant to an interline ticket.

Commentators argued that this rule would give rise to inefficiency, inhibit economies of scale from developing within the airline industry, and limit services available to passengers desiring international travel.

In recognition of these comments, § 1.883–1(g)(1)(vi) of the reproposed regulations provides that the sale or issuance of an interline or code-sharing passenger ticket for the carriage of persons by air between the U.S. gateway and another U.S. city preceding or following international transportation is an activity incidental to the international operation of aircraft. This rule only applies, however, if all such flight segments are provided pursuant to the passenger's original invoice, ticket, or itinerary.

4. *Activities not incidental to international operation of ships or aircraft.* i. *Hotel accommodations.* Under the 2000 proposed regulations, the sale or arranging for train travel, land tour packages and port city hotels is not an activity incidental to the international operation of ships or aircraft. Commentators suggested that an exception to that general rule be provided in the case of arranging for hotels for the one night before or after the international carriage of a passenger.

The reproposed regulations adopt this suggestion. It is not always possible for a cruise ship passenger to arrive at the port city on the morning of the scheduled departure or to arrange for a return flight home on the evening of the arrival back in port. Arranging for one night's accommodation in such situations is an adjunct to the operation of the cruise business. Thus, arranging for one night in a hotel before or after a cruise is considered incidental to the international operation of ships under § 1.883–1(g)(1)(vii) of the reproposed regulations.

ii. *Ground services and other services.* Under § 1.883–1(g)(2)(vi) of the 2000 proposed regulations, services performed for parties other than passengers, consignors or consignees, such as ground services at ports or airports or ship or aircraft maintenance, are not considered incidental to the international operation of ships or aircraft.

Several commentators suggested that income from services other than ground services provided by an operator, such as crewing, operating casinos, fleet management, operating reservations systems, and marketing or administrative services to consignors, consignees, as well as to members of the same pool, partnership, strategic alliance, joint operating agreement, code-sharing or other joint venture or joint operating arrangement, should be considered incidental.

The IRS and Treasury believe that no clear international norm or standard has developed regarding the appropriate treatment of such services. Accordingly, the reproposed regulations, in § 1.883–1(g)(3), reserve on the treatment of ground services, maintenance and catering, as well as other services not mentioned as included among incidental activities. The IRS and Treasury solicit comments on the appropriate rule.

5. *Activities incidental to the international operation of ships or aircraft performed by pool, partnership, strategic alliance, joint operating agreement, code-sharing arrangement or other joint venture.* The 2000 proposed regulations do not address whether activities performed by a pool, partnership, strategic alliance, joint operating agreement, code-sharing arrangement or other joint venture can be considered incidental to the international operation of ships or aircraft.

Commentators argued that activities a foreign corporation would perform for itself, absent such an arrangement or entity, should be incidental to the foreign corporation's international operation of ships or aircraft, within the meaning of § 1.883–1(g).

In response to these comments, § 1.883–1(g)(4) of the reproposed regulations broadens the scope of incidental activities. An activity may be considered incidental to the international operation of ships or aircraft by a foreign corporation, and income derived by the foreign corporation with respect to such activity is deemed to be income derived from the international operation of ships or aircraft, if the activity is performed by or pursuant to a pool, partnership, strategic alliance, joint operating agreement, code-sharing arrangement or other joint venture in which such foreign corporation participates, if (i) the activity is incidental to the international operation of ships or aircraft by the pool, partnership, strategic alliance, joint operating agreement, code-sharing arrangement or other joint venture, provided the joint venture is itself engaged in the operation of ships or aircraft; or (ii) such activity would be incidental to the international operation of ships or

aircraft by the foreign corporation, if it performed such activity itself, and provided the foreign corporation is otherwise is engaged in the operation of ships or aircraft.

6. *Interaction with income tax conventions.* i. *Eligibility for benefits under both a treaty and this regulation.* Section 1.883–1(h)(3) of the 2000 proposed regulations contains special rules regarding income tax conventions. Under the 2000 proposed regulations, if a corporation is organized in a foreign country that offers an exemption under an income tax convention and also some other means, such as a diplomatic note pursuant to section 883, the foreign corporation must choose annually whether to claim an exemption under section 894 and the income tax convention, or under section 883.

Commentators objected to this rule, stating that there was no tax policy rationale for requiring a foreign corporation eligible for an exemption under both section 883 and an income tax convention to make an annual election to claim under one or the other.

In response to these comments, § 1.883–1(h)(3)(i) of the reproposed regulations provides that if the taxpayer is eligible to exempt income under both an applicable income tax convention and section 883, the taxpayer may claim an exemption under both the applicable income tax convention and section 883 with respect to such category of income. As under the 2000 proposed regulations, however, such an election must be made with respect to all income of the foreign corporation from the international operation of ships or aircraft, and cannot be made separately with respect to different categories of income.

ii. *Regulation not intended to be used for interpretation of U.S. income tax conventions.* Many U.S. income tax conventions define the terms regarding international transport used therein, such as the term *international traffic,* but some conventions do not define such terms. In general, conventions provide that undefined terms have the meaning provided by the domestic laws of the contracting state from which treaty benefits are claimed. The 2000 proposed regulations do not state specifically whether the definitions and descriptions of terms used within those regulations should be used to interpret similar terms or concepts in income tax conventions or to delimit the scope of the exemption available under treaties for profits from shipping and air transport.

Treasury and IRS have received a number of inquiries regarding whether terms used in the 2000 proposed regulations should be used to interpret terms and concepts in U.S. income tax conventions, most commonly with respect to the definition of *international traffic* and related terms and concepts in the shipping and air transport article (typically, Article 8 of the convention).

In response to these inquiries, § 1.883–1(h)(3)(iii) of the reproposed regulations clarifies that definitions provided in these regulations do not give meaning or provide guidance regarding similar terms in U.S. income tax conventions or the scope of any treaty exemption. For example, the definition of the term *international operation of ships or aircraft* will not control the meaning of the terms *international traffic* and *international transport,* as used in U.S. income tax conventions. *See* H.R. Conf. Rep. No. 99–841, 99th Cong., 2d Sess. 599 (1986), reprinted in 1986–3 C.B. vol. 4, at 599 (''The conferees wish to clarify that the [conference] agreement's provisions do not deny any benefits available under present law in an income tax treaty between the United States and a foreign country.'').

7. *Substantiation and reporting requirements.* For a foreign corporation to be considered a qualified foreign corporation under § 1.883–1(c), the 2000 proposed regulations require that the corporation identify on its return each category of qualified income for which it claims an exemption and provide a reasonable estimate of the amount of qualified income for each such category.

Commentators criticized this requirement on the ground that many foreign corporations, such as foreign airlines, do not keep books and records based on U.S. generally accepted accounting principles reflecting each separate item of income. Commentators also complained that foreign corporations could not determine without significant administrative burden how much income would be from sources within the United States under U.S. income tax principles.

In response to these comments, § 1.883–1(c)(3) of the reproposed regulations provides that a reasonable estimate of each category of qualified income for which an exemption is claimed must be provided to the extent such amounts are readily determinable. This standard is consistent with the general standards in § 1.6012–2(g)(1)(i) for information included on returns filed by foreign corporations that claim an exemption from income tax by reason of U.S. domestic law or a U.S. income tax convention.

C. Comments Relating to § 1.883–2: Treatment of Publicly-Traded Corporations

Section 883(c)(1) provides that a foreign corporation shall not be eligible for the exclusion of income from the international operation of ships or aircraft if 50 percent or more of the value of its stock is owned by individuals who are not residents of a qualified foreign country. Section 883(c)(3) provides, however, that this rule shall not apply to any foreign corporation whose stock is primarily and regularly traded on an established securities market in either the United States or a qualified foreign country.

Section 1.883–2 of the 2000 proposed regulations provides rules regarding section 883(c)(3). As explained more fully in the preamble to those regulations, the branch profits tax rules under § 1.884–5(d) provide the framework for § 1.883–2. Section 1.883–2(d) of the 2000 proposed regulations defines the term *regularly traded.* For the stock of foreign corporation to be considered regularly traded, one or more classes of the corporation's stock that in the aggregate represent 80 percent or more of the total combined voting power of all classes of stock of such corporation entitled to vote must be listed on an established securities market. In addition, the 2000 proposed regulations provide that a class of stock cannot be counted for purposes of meeting the regularly traded requirement if one or more persons who own at least 5 percent of the value of the outstanding shares of the class of stock (5-percent shareholders) own in the aggregate 50 percent of more of the value of stock in the class.

As discussed below, in response to comments received, the reproposed regulations modify the 2000 proposed regulations rules regarding the 80 percent listing requirement and the rules for closely-held classes of stock. The reproposed regulations do not, however, modify the rules regarding the reporting (on the corporation's Form 1120F) of the names of any 5-percent shareholders upon which the foreign corporation intends to rely to satisfy section 883(c). Moreover, the reproposed regulations do not adopt a suggestion regarding the treatment for purposes of the stock ownership test of section 883(c)(1) of shareholders in a publicly-traded class of stock of a non-publicly traded corporation.

1. *Regularly traded listing threshold.* Under the 2000 proposed regulations, in accordance with Section 883(c)(3)(A), the stock of a foreign corporation must be regularly traded for the foreign

corporation to satisfy the publicly traded test. To determine whether the foreign corporation's stock is regularly traded, § 1.883–2(d) of the 2000 proposed regulations generally adopts the threshold used in connection with the branch profits tax rules of § 1.884–5(d)(4)(i)(A). Under § 1.883–2(d), the stock of a corporation is regularly traded if one or more classes of stock of the corporation are listed on an established securities market in the United States or in a qualified foreign country, and those classes, in the aggregate, represent 80 percent or more of the total combined voting power of all classes of stock of such corporation entitled to vote and of the total value of the stock (provided also that certain trading requirements are satisfied).

Commentators objected to the 80 percent listing requirement. Commentators suggested that in cases where a corporation has an initial public offering of a new class of stock, or where a founding family retains voting control through a separate class of stock from the publicly traded class, the 80 percent listing requirement could make it impossible for the corporation to be regularly traded, even where the listed class or classes are widely held and actively traded. For example, commentators posited that a foreign government's minority interest of 25 percent held in a separate unlisted class over the time period required for privatization of a national airline would disqualify the airline, even if its stock were otherwise widely held and actively traded.

In response to these comments, § 1.883–2(d)(1) of the reproposed regulations reduces the 80 percent listing requirement to 50 percent. The lower percentage corresponds more closely with recent U.S. treaty policy regarding the publicly traded test contained in the Limitation on Benefits articles of certain U.S. income tax conventions. This modification of the general regularly traded test also mitigates some commentators' concerns regarding the closely-held test, as explained below in Part II.C.2.

2. *Closely-held classes of stock.* Section 1.883–2(d)(3) of the 2000 proposed regulations disqualifies a class of stock from being relied on to satisfy the publicly traded test if, at any time during the taxable year, one or more 5-percent shareholders of that class of stock (determined without regard to the attribution rules in § 1.883–4) owns, in the aggregate, 50 percent or more of the total value of that class of stock. The 2000 proposed regulations, however, provide an exception to this disqualification. An otherwise qualifying closely-held class of stock still can meet the regularly traded test if the foreign corporation can establish that more than 50 percent of the value of the outstanding shares of that class of stock are owned or treated as owned by persons who are qualified shareholders for more than half the number of days during the taxable year. These rules are based upon the closely-held test provided in § 1.884–5(d)(4)(iii) with respect to the branch profits tax.

Several commentators suggested that the legislative history of section 883 does not support the adoption of a closely-held test. Commentators pointed out a number of statutory distinctions between sections 883 and 884 in advocating deletion of the closely-held test in its entirety.

Other commentators contended that the closely-held rules effectively eliminate the publicly traded test as a viable alternative to the qualified shareholder stock ownership test for closely-held corporations that otherwise meet the listing and trading requirements. These commentators felt it would be administratively impossible to identify and document that qualified shareholders hold more than 50 percent of the value of the outstanding shares of a class of stock because the corporation would not be able to collect sufficient information from individuals owning shares through the widely-held block of stock or from custodians such as financial institutions holding shares on behalf of customers. These commentators therefore requested that the closely-held test be deleted, or that the widely-held block be treated as owned by qualified shareholders, such that the foreign corporation only would have to look to the qualified 5-percent shareholders of the closely-held block to prove up the difference between the percentage owned by the widely-held block and 50 percent.

The reproposed regulations take into account the principal concerns of the commentators. While the reproposed regulations retain the closely-held test and do not change substantially the definition of a closely-held class of stock, the reproposed regulations broaden the exception in § 1.883–2(d)(3)(ii). Under the reproposed regulations, a class of stock will not be treated as closely-held if the foreign corporation can establish that qualified shareholders, applying the attribution rules of § 1.883–4(c), own enough shares of the closely-held block of stock to preclude non-qualified shareholders in the closely-held block of stock from owning 50 percent or more of the total value of the class of stock for more than half the number of days during the taxable year. A foreign corporation may establish that a class of stock meets this exception if it obtains documentation described in § 1.883–4(d) from those qualified shareholders owning shares in the closely-held block of stock whom the foreign corporation has relied upon to meet the exception. This change broadens the exception to the closely-held test by allowing a foreign corporation to prove that a class of shares is not closely-held using information solely from shareholders within the closely-held block of stock.

In addition, § 1.883–2(d)(3)(iii)(B) of the reproposed regulations provides that an investment company will not be treated as a 5-percent shareholder for purposes of the closely-held test if no person owning an interest in the investment company owns, after application of the attribution rules of § 1.883–4(c), 5 percent or more of the value of the outstanding shares of the class of stock of the foreign corporation seeking qualified foreign corporation status. This rule prevents a corporation from having a closely-held class of stock simply because an investment company that meets the above requirements causes a class of stock of that corporation to be owned more than 50 percent in the aggregate by 5-percent shareholders.

Finally, the reproposed regulations in § 1.883–4(d)(3)(viii) adopt the suggestion of one commentator that an otherwise publicly-traded foreign corporation seeking qualified foreign corporation status or a publicly-traded shareholder corporation that is traded on an established securities market in the United States may rely on its latest SEC Form 13G filing (Statement of Beneficial Ownership by Certain Persons) for the taxable year to determine if the class of stock being considered has a 5-percent shareholder. The IRS and Treasury believe these changes to the 2000 proposed regulations will facilitate compliance with the closely-held test.

3. *Publicly-traded classes of stock of a non-publicly traded corporation.* Regulations under section 884 regarding the branch profits tax provide that a publicly traded class of stock is treated as owned by individuals who are residents of a qualified foreign country. Such a provision might be relevant as well in the context of section 883 if one or more classes of the corporation's stock are publicly traded but the corporation itself is not considered publicly traded. If these other classes were treated as owned by qualified shareholders, the foreign corporation might be more likely to satisfy section 883(c), as provided in §§ 1.883–1(c)(2)

and 1.883–4. Commentators recommended that the reproposed regulations adopt the rule of the branch profit regulations.

The reproposed regulations, however, do not adopt this suggestion. The IRS and Treasury believe that the reduction in the listing threshold from 80 percent to 50 percent and the change in the exception to the closely-held test provide sufficient latitude for foreign corporations seeking to comply with the publicly traded test. Moreover, as discussed below in Part II.E.1, the reproposed regulations adopt commentators' suggestions regarding the treatment of certain institutional 5-percent shareholders for purposes of § 1.883–4 which should also ease compliance.

4. *Identification of 5-percent qualified shareholders on return.* Sections 1.883–2(f) and 1.883–4(e) of the 2000 proposed regulations require that the foreign corporation identify on its Form 1120F, ''U.S. Income Tax Return of a Foreign Corporation,'' its qualified shareholders that own, or are treated as owning within the meaning of § 1.883–4(c), 5 percent or more of the stock of the foreign corporation and upon which the foreign corporation intends to rely to satisfy the stock ownership test of § 1.883–1(c)(2).

Commentators were concerned that the identity of such qualified shareholders might be disclosed. Although the name of a 5-percent shareholder is return information that is not subject to disclosure under section 6110, commentators believed that such information might nevertheless become public, for example, in the context of taxpayer litigation. They also expressed concern that there could be spontaneous exchanges of information with treaty partners that do not have the same non-disclosure restrictions as the United States. Some commentators suggested that the documentation instead be made available to a third party for use by the Commissioner upon request.

The reproposed regulations do not adopt these suggestions, in the interest of sound tax administration. The IRS and Treasury believe that there exist sufficient safeguards in our treaties and in the Internal Revenue Code to prevent the unintended disclosure of the identity of qualified 5-percent shareholders relied upon to satisfy the requirements of §§ 1.883–2(f) and 1.883–4(e).

D. Comments Relating to § 1.883–3—Treatment of Controlled Foreign Corporations

Section 883(c)(2) provides that the stock ownership test of section 883(c)(1) shall not apply to controlled foreign corporations (CFCs). Under the 2000 proposed regulations, a CFC is considered to satisfy the CFC exception of section 883(c)(1) if it meets the requirements of § 1.883–3. To meet those requirements, a CFC must, among other things, pass the income inclusion test of § 1.883–3(b). The income inclusion test contained in the 2000 proposed regulations requires that more than 50 percent of the subpart F income derived by the CFC from the international operation of ships or aircraft be includible in the gross income of one or more U.S. citizens, individual residents of the United States, or domestic corporations. For example, a CFC owned by a domestic partnership, the partners of which are residents of foreign countries, would not meet the income inclusion test.

One commentator argued that the income inclusion test was too restrictive because it could deny qualified foreign corporation status to CFCs legitimately owned and controlled by U.S. shareholders. For example, a foreign corporation owned by U.S. citizens who are family members could be a CFC as a result of the constructive ownership rules of section 958(b), but fail the income inclusion test because not all the family members own directly or indirectly, under section 958(a), 10 percent or more of the CFC's voting stock, and thus may not be required to include in their gross income the subpart F income of the CFC.

The CFC exception of the 2000 proposed regulation has not been changed substantively in these reproposed regulations. The Conference report accompanying the legislation that added the CFC exception provides with respect to the exception that ''corporations are not considered residents of countries that exempt U.S. persons unless 50 percent or more of the ultimate individual owners are U.S. shareholders of controlled foreign corporations''. H.R. Conf. Rep. No. 99–841, 99th Cong., 2d Sess. 598 (1986), reprinted in 1986–3 C.B. vol. 4, at 598 (1986). The intent of the CFC exception therefore is for the general ownership requirement 883(c)(1) to apply unless the foreign corporation is a CFC and 50 percent or more of the subpart F income of that corporation derived from the international operation of ships or aircraft is includible by U.S. citizens, individual residents or domestic corporations.

The reproposed regulations do clarify the operation of the income inclusion test by specifying with greater precision than the 2000 proposed regulations that the income inclusion test only applies to subpart F income derived from the international operation of ships and aircraft.

E. Comments Relating to § 1.883–4—Qualified Shareholder Stock Ownership Test

As noted above, section 883(c)(1) provides that a foreign corporation shall not be eligible for the exclusion of income from the international operation of ships or aircraft if 50 percent or more of the value of its stock is owned by individuals who are not residents of a qualified foreign country. Section 1.882–4 of the 2000 proposed regulations provides detailed rules regarding this statutory requirement.

In response to comments the IRS received regarding those provisions of the 2000 proposed regulations, the reproposed regulations modify the rules regarding the permissible categories of qualified shareholders, the requirements for establishing qualified shareholder status under an income tax convention, the attribution of ownership in the case of taxable non-stock corporations, and the preparation of ownership statements from foreign governments. As discussed below, however, the reproposed regulations generally do not modify the 2000 proposed regulations with respect to the treatment of bearer shares or with respect to the attribution of ownership of discretionary trusts.

1. *Qualified shareholders.* Under the 2000 proposed regulations, a foreign corporation may satisfy the stock ownership test of § 1.883–1(c)(2) if it meets the qualified shareholder stock ownership test of § 1.883–4. The qualified shareholder stock ownership test generally requires more than 50 percent ownership by qualified shareholders. Section 1.883–4(b) of the 2000 proposed regulations provides a list of persons who can be qualified shareholders.

Several commentators requested the inclusion of additional categories of qualified shareholders. One commentator suggested that foreign airlines covered by a bilateral air services agreement between the United States and another country should be deemed to satisfy the ownership requirements of § 1.883–4(a) because these agreements require substantial ownership and effective control by nationals of the other country. In response to this comment, the reproposed regulations add shareholders of such airlines to the list of qualified shareholders in § 1.883–4(b)(1)(i)(F), subject to certain conditions.

Other commentators suggested that the list of qualified shareholders include

a mutual fund, money market manager, regulated investment company, open and closed-end fund, investment partnership or other type of investment vehicle available to the public and subject to regulation by the Securities and Exchange Commission. Such entities have great difficulty in demonstrating that more than 50 percent of the value of their shares is owned, or treated as owned, by qualified shareholders.

The reproposed regulations do not adopt these suggestions. The IRS and Treasury recognize the difficulty in proving ownership of such entities, but many owners of such entities may in fact be U.S. residents or other non-qualified shareholders. However, § 1.883–4(d)(3)(viii) of the reproposed regulations does permit a publicly traded corporation to rely on its Form 13G ''Statement of Beneficial Ownership by Certain Persons'' to identify 5-percent shareholders for purposes of the documentation requirements of § 1.883–2(e). Certain of these entities may be able to rely upon this section without additional compliance burden because they are already required to file Form 13G and identify 5-percent shareholders.

2. *Bearer shares.* Section 1.883–4(b)(1)(ii) of the 2000 proposed regulations provides that a shareholder is a qualified shareholder only if the shareholder does not own its interest in the foreign corporation through bearer shares, either directly or by applying the attribution rules of § 1.883–4(c).

Several commentators criticized this rule. They contended that the restriction on the use of bearer shares raises concerns of fundamental fairness and that the IRS should not attempt to regulate the personal property rights of nonresident alien individuals. These commentators suggested that the rule should be deleted or substantially modified to allow the use of bearer shares whose ownership can be substantiated to the satisfaction of the Commissioner.

Due to the difficulty of reliably demonstrating the true ownership of such shares, the reproposed regulations do not adopt this suggestion, in the interest of sound tax administration.

3. *Certain limitation on benefits article restrictions in income tax conventions applied to shareholders.* Under § 1.883–4(b)(3)(i) of the 2000 proposed regulations, a shareholder resident in a treaty country is not a qualified shareholder by virtue of the treaty exemption unless the foreign corporation of which it is a shareholder would be able to satisfy, if it were organized in the treaty country, any additional requirement imposed by the shipping and air transport article or the limitation of benefits article of the treaty upon which the shareholder relies.

Commentators objected to this rule because it effectively prevents many foreign corporations, especially airlines, from relying on ownership resident in a treaty country to obtain a section 883 exemption. Commentators also argued that the provision would act as a significant and inappropriate barrier to joint venture corporations with owners or partners resident in treaty countries.

In response to these comments, the reproposed regulations modify the 2000 proposed regulations, so that if a shareholder relies on an income tax convention to demonstrate residence in a qualified foreign country, the shareholder alone must satisfy the residence requirements and limitation on benefits requirements of the convention. The reproposed regulations thus eliminate the requirement that the corporation seeking qualified foreign corporation status itself must satisfy any additional requirements.

4. *Taxable non-stock corporations.* The 2000 proposed regulations, in § 1.883–4(c), provide for attribution of ownership through various entities for purposes of the closely-held test in § 1.883–2(d)(3)(ii) and the stock ownership test in § 1.883–4(a).

Several commentators called for additional guidance on attribution of ownership in the case of taxable non-stock corporations entitled to deduct amounts distributed for charitable purposes.

The reproposed regulations address this request for guidance in § 1.883–4(c)(5). Under this provision, if a taxable non-stock corporation is entitled in its country of organization to deduct from its taxable income amounts distributed for charitable purposes, the corporation may deem a recipient of such charitable distributions to be a shareholder owning stock in the same proportion as the amount received in the taxable year bears to the total income of the corporation in that taxable year. Whether each such recipient is a qualified shareholder then may be determined under § 1.883–4(b) or under the special rules of § 1.883–4(d)(3)(vii).

5. *Discretionary trusts.* The 2000 proposed regulations, in § 1.883–4(c)(3)(i), adopt the attribution rules for discretionary trusts contained in the branch profits tax regulations under § 1.884–5(b)(2)(iii)(A). If a beneficiary's actuarial interest in a nongrantor trust cannot be determined, then stock held by the trust will not be attributed to any beneficiary unless all beneficiaries with an interest in the stock are qualified shareholders.

One commentator recommended that the regulations instead follow Notice 97–19 (1997–1 C.B. 394), which provides guidance for purposes of section 877 in determining the net worth of an individual beneficiary of a trust. Notice 97–19 generally attributes all interests in a trust based on relevant facts and circumstances, in order to assure that an individual will not avoid the application of section 877 by alleging he or she has no actuarially determinable interest in a trust.

The reproposed regulations do not adopt this suggestion because of the substantially different purpose of the trust attribution rules under section 877 as opposed to section 883. The purpose of those rules is to attribute trust income to United States persons using constructive attribution. The purpose of the trust attribution rules under section 883 is to determine whether a foreign corporation is a qualified foreign corporation by virtue of the residence of its shareholders. This difference in purpose prevents effective use of the section 877 methodology.

6. *Substantiation of stock ownership.* Section 1.883–4(b)(1)(iii) of the 2000 proposed regulations provides that a shareholder is a qualified shareholder only if the shareholder provides to the foreign corporation the documentation required in § 1.883–4(d), and the foreign corporation meets the reporting requirements of § 1.883–4(e) with respect to such shareholder.

Several commentators argued that the requirement that the foreign corporation obtain ownership statements was excessive, at least with respect to foreign corporations that do not have U.S. branches. Other commentators suggested that certain qualified professionals and financial institutions be authorized to provide ownership statements on behalf of foreign governments. They noted that, as drafted, practical compliance with the procedures may be difficult in countries where ownership of a shipping company, for example, is held by several state enterprises, some of which have begun the privatization process or are in transition to privatization and where any state supervision or control may be remote from the shipping company.

The reproposed regulations under § 1.883–4(d) generally retain the structure and substance of the 2000 proposed regulations with respect to the substantiation of stock ownership. However, § 1.883–4(d)(4)(ii) of the reproposed regulations, regarding ownership statements from foreign

governments, permits foreign corporations with shareholders that are foreign governments to engage accounting or law firms or financial institutions to prepare certificates as to ultimate beneficial interest with respect to the aggregate government investment in the stock of the foreign corporation.

F. Comments Related to § 1.883–5—Effective Date

Section 1.883–5 of the 2000 proposed regulations provides that the regulations will apply to taxable years of the foreign corporation ending 30 days or more after the date the regulations are published as final regulations in the **Federal Register**.

A number of commentators argued that compliance with the 2000 proposed regulations would require foreign corporations to develop new accounting and record-keeping conventions and procedures. Some commentators therefore suggested that the effective date be extended to taxable years beginning 30 days or more after the date these regulations are published as final regulations in the **Federal Register**. Other commentators suggested that the regulations should not be effective earlier than six months or one year after the publication date of the final regulations.

In response to these suggestions, the reproposed regulations provide that they will apply to taxable years of a foreign corporation beginning 30 days or more after the date these regulations are published as final regulations in the **Federal Register**.

In addition, when the reproposed regulations are published as final, taxpayers will be permitted to elect to apply the provisions of §§ 1.883–1 through 1.883–4, as finalized, to any open taxable year beginning after 1986. Such election shall apply to the taxable year of the election and to all subsequent taxable years. Notwithstanding this election, the substantiation and reporting requirements of § 1.883–1(c)(3) (relating to the substantiation and reporting required to be treated as a qualified foreign corporation) and §§ 1.883–2(f), 1.883–3(d) and 1.883–4(e) (relating to additional information to be included in the return to demonstrate whether the foreign corporation satisfies the stock ownership test) will not apply to any years beginning before the effective date of the final regulations. However, if a foreign corporation complies with the proposed regulations, including the substantiation and reporting rules, such compliance will be considered substantial evidence that the foreign corporation is a qualified foreign corporation.

Special Analysis

It has been determined that this notice of proposed rulemaking is not a significant regulatory action as defined in Executive Order 12866. Therefore, a regulatory assessment is not required. It has also been determined that section 553(b) of the Administrative Procedure Act (5 U.S.C. chapter 5) does not apply to these regulations, and because this notice of proposed rulemaking does not impose a collection of information on U.S. small entities, the regulatory Flexibility Act (5 U.S.C. chapter 6) does not apply. Pursuant to section 7805(f) of the Code, this notice of proposed rulemaking will be submitted to the Chief Counsel for Advocacy of the Small Business Administration for comment on its impact on small business.

Comments and Public Hearing

Before these proposed regulations are adopted as final regulations, consideration will be given to any written comments (a signed original and eight (8) copies) that are submitted timely to the IRS. The IRS and Treasury request comments on the clarity of the proposed rule and how it may be made easier to understand. All comments will be made available for public inspection and copying.

A public hearing has been scheduled for November 12, 2002, at 10 a.m., in room 4718, Internal Revenue Building, 1111 Constitution Ave., NW., Washington, DC. All visitors must present photo identification to enter the building at the Constitution Avenue entrance. Because of access restrictions, visitors will not be admitted beyond the immediate entrance area more than 30 minutes before the hearing starts. For information about having your name placed on the building access list to attend the hearing, *see* the **FOR FURTHER INFORMATION CONTACT** section of this preamble.

The rules of 26 CFR 601.601(a)(3) apply to this hearing. Persons who wish to present oral comments at the hearing must submit written comments and an outline of the topics to be discussed and the time to be devoted to each topic (signed original and eight (8) copies) by October 22, 2002. A period of 10 minutes will be allotted to each person for making comments. An agenda showing the scheduling of the speakers will be prepared after the deadline for receiving outlines has passed. Copies of the agenda will be available free of charge at the hearing.

Drafting Information

The principal author of these proposed regulations is Patricia A. Bray of the Office of the Associate Chief Counsel (International). However, other personnel from the IRS and Treasury Department participated in their development.

List of Subjects in 26 CFR Part 1

Income taxes, Reporting and recordkeeping requirements.

Withdrawal of Proposed Amendments

Accordingly, under the authority of 26 U.S.C. 7805, the proposed amendment to 26 CFR Part 1 that was published in the **Federal Register** on Tuesday, February 8, 2000, (65 FR 6065) is withdrawn.

Proposed Amendments to the Regulations

Accordingly, 26 CFR part 1 is proposed to be amended as follows:

PART 1—INCOME TAXES

Paragraph 1. The authority citation for part 1 is amended by adding entries in numerical order to read as follows:

Authority: 26 U.S.C. 7805 * * *

Section 1.883–1 is also issued under 26 U.S.C. 883.

Section 1.883–2 is also issued under 26 U.S.C. 883.

Section 1.883–3 is also issued under 26 U.S.C. 883.

Section 1.883–4 is also issued under 26 U.S.C. 883.

Section 1.883–5 is also issued under 26 U.S.C. 883. * * *

Par. 2. Section 1.883–0 is added to read as follows:

§ 1.883–0 Outline of major topics.

This section lists the major paragraphs contained in §§ 1.883–1 through 1.883–5.

§ 1.883–0 Outline of major topics.

§ 1.883–1 Exclusion of income from the international operation of ships or aircraft.

(a) General rule.

(b) Qualified income.

(c) Qualified foreign corporation.

(1) General rule.

(2) Stock ownership test.

(3) Substantiation and reporting requirements.

(i) General rule.

(ii) Further documentation.

(4) Commissioner's discretion to cure defects in documentation.

(d) Qualified foreign country.

(e) Operation of ships or aircraft.

(1) General rule.

(2) Pool, partnership, strategic alliance, joint operating agreement,

code-sharing arrangement or other joint venture.
(3) Activities not considered operation of ships or aircraft.
(4) Examples.
(5) Definitions.
(i) Bareboat charter.
(ii) Code-sharing arrangement.
(iii) Dry lease.
(iv) Entity.
(v) Fiscally transparent entity under the income tax laws of the United States.
(vi) Full charter.
(vii) Nonvessel operating common carrier.
(viii) Space or slot charter.
(ix) Time charter.
(x) Voyage charter.
(xi) Wet lease.
(f) International operation of ships or aircraft.
(1) General rule.
(2) Determining whether income is derived from international operation of ships or aircraft.
(i) International carriage of passengers.
(A) General rule.
(B) Round trip travel on ships.
(ii) International carriage of cargo.
(iii) Bareboat charter of ships or dry lease of aircraft used in international operation of ships or aircraft.
(A) Ratio based on use.
(B) Ratio based on gross income.
(g) Activities incidental to the international operation of ships or aircraft.
(1) General rule.
(2) Activities not considered incidental to the international operation of ships or aircraft.
(3) Services.
(i) Ground services, maintenance, and catering.
(ii) Other services.
(4) Activities involved in a pool, partnership, strategic alliance, joint operating agreement, code-sharing arrangement or other joint venture.
(h) Equivalent exemption.
(1) General rule.
(2) Determining equivalent exemptions for each category of income.
(3) Special rules with respect to income tax conventions.
(i) General rule.
(ii) Participation in certain joint ventures.
(iii) Independent interpretation of income tax conventions.
(4) Exemptions not qualifying as equivalent exemptions.
(i) General rule.
(ii) Reduced tax rate or time limited exemption.
(iii) Inbound or outbound freight tax.
(iv) Exemptions for limited types of cargo.
(v) Territorial tax systems.
(vi) Countries that tax on a residence basis.
(vii) Exemptions within categories of income.
(i) Treatment of possessions.
(j) Expenses related to qualified income.

1.883–2 Treatment of publicly-traded corporations.

(a) General rule.
(b) Established securities market.
(1) General rule.
(2) Exchanges with multiple tiers.
(3) Computation of dollar value of stock traded.
(4) Over-the-counter market.
(5) Discretion to determine that an exchange does not qualify as an established securities market.
(c) Primarily traded.
(d) Regularly traded.
(1) General rule.
(2) Classes of stock traded on a domestic established securities market treated as meeting trading requirements.
(3) Closely-held classes of stock not treated as meeting trading requirements.
(i) General rule.
(ii) Exception.
(iii) Five-percent shareholders.
(A) Related persons.
(B) Investment companies.
(4) Anti-abuse rule.
(5) Example.
(e) Substantiation that a foreign corporation is publicly-traded.
(1) General rule.
(2) Availability and retention of documents for inspection.
(f) Reporting requirements.

§ 1.883–3 Treatment of controlled foreign corporations.

(a) General rule.
(b) Income inclusion test.
(1) General rule.
(2) Examples.
(c) Substantiation of CFC stock ownership.
(1) General rule.
(2) Documentation from certain United States shareholders.
(i) General rule.
(ii) Availability and retention of documents for inspection.
(d) Reporting requirements.

§ 1.883–4 Qualified shareholder stock ownership test.

(a) General rule.
(b) Qualified shareholder.
(1) General rule.
(2) Residence of individual shareholders.
(i) General rule.
(ii) Tax home.
(3) Certain income tax convention restrictions applied to shareholders.
(4) Not-for-profit organizations.
(5) Pension funds.
(i) Pension fund defined.
(ii) Government pension funds.
(iii) Non-government pension funds.
(iv) Beneficiary of a pension fund.
(c) Rules for determining constructive ownership.
(1) General rules for attribution.
(2) Partnerships.
(i) General rule.
(ii) Partners resident in the same country.
(iii) Examples.
(3) Trusts and estates.
(i) Beneficiaries.
(ii) Grantor trusts.
(4) Corporations that issue stock.
(5) Taxable non-stock corporations.
(6) Mutual insurance companies and similar entities.
(7) Computation of beneficial interests in non-government pension funds.
(d) Substantiation of stock ownership.
(1) General rule.
(2) Application of general rule.
(i) Ownership statements.
(ii) Three-year period of validity.
(3) Special rules.
(i) Substantiating residence of certain shareholders.
(ii) Special rule for registered shareholders owning less than one percent of widely-held corporations.
(iii) Special rules for beneficiaries of pension funds.
(A) Government pension fund.
(B) Non-government pension fund.
(iv) Special rule for stock owned by publicly-traded corporations.
(v) Special rule for not-for-profit organizations.
(vi) Special rule for a foreign airline covered by an air services agreement.
(vii) Special rule for taxable non-stock corporations.
(viii) Special rule for closely-held corporations traded in the United States.
(4) Ownership statements from shareholders.
(i) Ownership statements from individuals.
(ii) Ownership statements from foreign governments.
(iii) Ownership statements from publicly-traded corporate shareholders.
(iv) Ownership statements from not-for-profit organizations.
(v) Ownership statements from intermediaries.
(A) General rule.
(B) Ownership statements from widely-held intermediaries with registered shareholders owning less than one percent of such widely-held intermediary.
(C) Ownership statements from pension funds.
(*1*) Ownership statements from government pension funds.

(*2*) Ownership statements from non-government pension funds.

(*3*) Time for making determinations.

(D) Ownership statements from taxable non-stock corporations.

(5) Availability and retention of documents for inspection.

(e) Reporting requirements.

§ 1.883–5 Effective date.

(a) General rule.

(b) Election for retroactive application.

(c) Transitional information reporting rule.

Par. 3. § 1.883–1 is revised to read as follows:

§ 1.883–1 Exclusion of income from the international operation of ships or aircraft.

(a) *General rule.* Qualified income derived by a qualified foreign corporation from its international operation of ships or aircraft is excluded from gross income and exempt from United States Federal income tax. Paragraph (b) of this section defines the term *qualified income*. Paragraph (c) of this section defines the term *qualified foreign corporation*. Paragraph (f) of this section defines the term *international operation of ships or aircraft*.

(b) *Qualified income.* Qualified income is income derived from the international operation of ships or aircraft that—

(1) Is properly includible in any of the income categories described in paragraph (h)(2) of this section; and

(2) Is the subject of an equivalent exemption, as defined in paragraph (h) of this section, granted by the qualified foreign country, as defined in paragraph (d) of this section, in which the foreign corporation seeking qualified foreign corporation status is organized.

(c) *Qualified foreign corporation*—(1) *General rule.* A qualified foreign corporation is a corporation that is organized in a qualified foreign country and considered engaged in the international operation of ships or aircraft. The term *corporation* is defined in section 7701(a)(3) and the regulations thereunder. Paragraph (d) of this section defines the term *qualified foreign country.* Paragraph (e) of this section defines the term *operation of ships or aircraft,* and paragraph (f) of this section defines the term *international operation of ships or aircraft.* To be a qualified foreign corporation, the corporation must satisfy the stock ownership test of paragraph (c)(2) of this section and satisfy the substantiation and reporting requirements described in paragraph (c)(3) of this section. A corporation may be a qualified foreign corporation with respect to one category of qualified income but not with respect to another such category. See paragraph (h)(2) of this section for a discussion of the categories of qualified income.

(2) *Stock ownership test.* To be a qualified foreign corporation, a foreign corporation must satisfy the publicly-traded test of § 1.883–2(a), the CFC stock ownership test of § 1.883–3(a), or the qualified shareholder stock ownership test of § 1.883–4(a).

(3) *Substantiation and reporting requirements*—(i) *General rule.* To be a qualified foreign corporation, a foreign corporation must include the following information in its Form 1120F, ''U.S. Income Tax Return of a Foreign Corporation,'' in the manner prescribed by such form and its accompanying instructions—

(A) The corporation's name and address (including mailing code);

(B) The corporation's U.S. taxpayer identification number;

(C) The foreign country in which the corporation is organized;

(D) The applicable authority for an equivalent exemption, for example, citation of a statute in the country where the corporation is organized, a diplomatic note between the United States and such country, Rev. Rul. 2001–48 (2001–42 I.R.B. 324, October 15, 2001) as amended from time to time (*see* § 601.601(d)(2) of this chapter), or, in the case of a corporation described in paragraph (h)(3)(ii) of this section, an income tax convention between the United States and such country;

(E) The category or categories of qualified income for which an exemption is being claimed;

(F) A reasonable estimate of the amount of income in each category of qualified income for which the exemption is claimed, to the extent such amounts are readily determinable;

(G) Any other information required under §§ 1.883–2(f), 1.883–3(d), or 1.883–4(e), as applicable; and

(H) Any other relevant information specified by the Form 1120F and its accompanying instructions.

(ii) *Further documentation.* If the Commissioner requests in writing that the foreign corporation document or substantiate representations made under paragraph (c)(3)(i) of this section, or under § 1.883–2(f), 1.882–3(d) or 1.883–4(e), the foreign corporation must provide the documentation or substantiation within 60 days following the written request. If the foreign corporation does not provide the documentation and substantiation requested within the 60-day period, but demonstrates that the failure was due to reasonable cause and not willful neglect, the Commissioner may grant the foreign corporation a 30-day extension to provide the documentation or substantiation. Whether a failure to obtain the documentation or substantiation in a timely manner was due to reasonable cause and not willful neglect shall be determined by the Commissioner after considering all the facts and circumstances.

(4) *Commissioner's discretion to cure defects in documentation.* The Commissioner retains the discretion to cure any defects in the documentation where the Commissioner is satisfied that the foreign corporation would otherwise be a qualified foreign corporation.

(d) *Qualified foreign country.* A qualified foreign country is a foreign country that grants to corporations organized in the United States an equivalent exemption, as described in paragraph (h) of this section, for the category of qualified income, as described in paragraph (h)(2) of this section, derived by the foreign corporation seeking qualified foreign corporation status. A foreign country may be a qualified foreign country with respect to one category of qualified income but not with respect to another such category.

(e) *Operation of ships or aircraft*—(1) *General rule.* Except as provided in paragraph (e)(2) of this section, a foreign corporation is considered engaged in the operation of ships or aircraft only during the time it is an owner or lessee of one or more entire ships or aircraft and uses such ships or aircraft in one or more of the following activities—

(i) Carriage of passengers or cargo for hire;

(ii) In the case of a ship, the leasing out of the ship under a time or voyage charter (full charter), space or slot charter, or bareboat charter, as those terms are defined in paragraph (e)(5) of this section, provided the ship is used to carry passengers or cargo for hire; and

(iii) In the case of aircraft, the leasing out of the aircraft under a wet lease (full charter), space, slot, or block-seat charter, or dry lease, as those terms are defined in paragraph (e)(5) of this section, provided the aircraft is used to carry passengers or cargo for hire.

(2) *Pool, partnership, strategic alliance, joint operating agreement, code-sharing arrangement or other joint venture.* A foreign corporation is considered engaged in the operation of ships or aircraft with respect to its participation in a pool, partnership, strategic alliance, joint operating agreement, code-sharing arrangement or other joint venture that is either—

(i) An entity, as defined in paragraph (e)(5)(iv) of this section, that is a fiscally transparent entity under the income tax

laws of the United States, as defined in paragraph (e)(5)(v) of this section, with respect to the category of income derived from such operation, and that would be considered engaged in the operation of ships or aircraft under paragraph (e)(1) of this section if it were a foreign corporation; or

(ii) A pool, strategic alliance, joint operating agreement, code-sharing arrangement or other joint venture that is not an entity, as defined in paragraph (e)(5)(iv) of this section, involving one or more activities described in paragraphs (e)(1)(i) through (iii) of this section, but only if the foreign corporation is otherwise engaged in the operation of ships or aircraft under paragraph (e)(1) of this section.

(3) *Activities not considered operation of ships or aircraft.* Activities that do not constitute operation of ships or aircraft include, but are not limited to—

(i) The activities of a nonvessel-operating common carrier, as defined in paragraph (e)(5)(vii) of this section;

(ii) Ship or aircraft management;

(iii) Obtaining crews for ships or aircraft operated by another party;

(iv) Acting as a ship's agent;

(v) Ship or aircraft brokering;

(vi) Freight forwarding;

(vii) The activities of travel agents and tour operators;

(viii) Rental by a container leasing company of containers and related equipment; and

(ix) The activities of a concessionaire.

(4) *Examples.* The rules of paragraphs (e)(1) through (3) of this section are illustrated by the following examples:

Example 1. Three tiers of charters—(i) Facts. A, B, and C are foreign corporations. A purchases a ship. A and B enter into a bareboat charter of the ship for a term of 20 years, and B, in turn, enters into a time charter of the ship with C for a term of 5 years. Under the time charter, B is responsible for the complete operation of the ship, including providing the crew and maintenance. C uses the ship during the term of the time charter to carry its customers' freight between U.S. and foreign ports. C owns no ships. (ii) *Analysis.* Because A is the owner of the entire ship and leases out the ship under a bareboat charter to B, and because the sublessor, C, uses the ship to carry cargo for hire, A is considered engaged in the operation of a ship under paragraph (e)(1) of this section during the term of the time charter. B leases in the entire ship from A and leases out the ship under a time charter to C, who uses the ship to carry cargo for hire. Therefore, B is considered engaged in the operation of a ship under paragraph (e)(1) of this section during the term of the time charter. C time charters the entire ship from B and uses the ship to carry its customers' freight during the term of the charter. Therefore, C is also engaged in the operation of a ship under paragraph (e)(1) of this section during the term of the time charter.

Example 2. Partnership with contributed shipping assets—(i) *Facts.* X, Y, and Z, each a foreign corporation, enter into a partnership, P. P is a fiscally transparent entity under the income tax laws of the United States, as defined in paragraph (e)(5)(iv) and (v) of this section, with respect to all relevant categories of income. Under the terms of the partnership agreement, each partner contributes all of the ships in its fleet to P in exchange for interests in the partnership and shares in the P profits from the international carriage of cargo. The partners share in the overall management of P, but each partner, acting in its capacity as partner, continues to crew and manage all ships previously in its fleet.

(ii) *Analysis.* P owns the ships contributed by the partners and uses these ships to carry cargo for hire. Therefore, if P were a foreign corporation, it would be considered engaged in the operation of ships within the meaning of paragraph (e)(1) of this section. Accordingly, because P is a fiscally transparent entity under the income tax laws of the United States, as defined in paragraph (e)(5)(v) of this section, X, Y, and Z are each considered engaged in the operation of ships through P, within the meaning of paragraph (e)(2)(i) of this section, with respect to their distributive share of income from P's international carriage of cargo.

Example 3. Joint venture with chartered in ships—(i) *Facts.* Foreign corporation A owns a number of foreign subsidiaries involved in various aspects of the shipping business, including S1, S2, S3, and S4. S4 is a foreign corporation that provides cruises but does not own any ships. S1, S2, and S3 are foreign corporations that own cruise ships. S1, S2, S3, and S4 form joint venture JV, in which they are all interest holders, to conduct cruises. JV is fiscally transparent under the income tax laws of the United States, as defined in paragraph (e)(5)(v) of this section, with respect to its income from the carriage of passengers. Under the terms of the joint venture, S1, S2, and S3 each enter into time charter agreements with JV, pursuant to which S1, S2, and S3 retain control of the navigation and management of the individual ships, and JV will use the ships to carry passengers for hire. The overall management of the cruises line will be provided by S4.

(ii) *Analysis.* S1, S2, and S3 each owns ships and time charters those ships to JV, which uses the ships to carry passengers for hire. Accordingly, S1, S2, and S3 are each considered engaged in the operation of ships under paragraph (e)(1) of this section. JV leases in entire ships by means of the time charters, and JV uses those ships to carry passengers on cruises. Thus, JV would be engaged in the operation of ships within the meaning of paragraph (e)(1) of this section if it were a foreign corporation. Therefore, although S4 does not directly own or lease in a ship, S4 also is engaged in the operation of ships, within the meaning of paragraph (e)(2)(i) of this section, with respect to its participation in JV.

(5) *Definitions*—(i) *Bareboat charter.* A bareboat charter is a contract for the use of a ship or aircraft whereby the lessee is in complete possession, control, and command of the ship or aircraft. For example, in a bareboat charter, the lessee is responsible for the navigation and management of the ship or aircraft, the crew, supplies, repairs and maintenance, fees, insurance, charges, commissions and other expenses connected with the use of the ship or aircraft. The lessor of the ship bears none of the expense or responsibility of operation of the ship or aircraft.

(ii) *Code-sharing arrangement.* A code-sharing arrangement is an arrangement in which one air carrier puts its identification code on the flight of another carrier. This arrangement allows the first carrier to hold itself out as providing service in markets where it does not otherwise operate or where it operates infrequently. Code-sharing arrangements can range from a very limited agreement between two carriers involving only one market to agreements involving multiple markets and alliances between or among international carriers which also include joint marketing, baggage handling, one-stop check-in service, sharing of frequent flyer awards, and other services. For rules involving the sale of code-sharing tickets, see paragraph (g)(1)(vi) of this section.

(iii) *Dry lease.* A dry lease is the bareboat charter of an aircraft.

(iv) *Entity.* For purposes of this paragraph (e), an entity is any person that is treated by the United States as other than an individual for U.S. Federal income tax purposes. The term includes disregarded entities.

(v) *Fiscally transparent entity under the income tax laws of the United States.* For purposes of this paragraph (e), an entity is fiscally transparent under the income tax laws of the United States with respect to a category of income if the entity would be considered fiscally transparent under the income tax laws of the United States for purposes of § 1.894–1 with respect to an item of income within that category of income.

(vi) *Full charter.* Full charter (or full rental) means a time charter or a voyage charter of a ship or a wet lease of an aircraft but during which the full crew and management are provided by the lessor.

(vii) *Nonvessel operating common carrier.* A nonvessel operating common carrier is an entity that does not exercise control over any part of a vessel, but holds itself out to the public as providing transportation for hire, issues bills of lading, assumes responsibility or is liable by law as a common carrier for safe transportation of shipments, and

arranges in its own name with other common carriers, including those engaged in the operation of ships, for the performance of such transportation.

(viii) *Space or slot charter.* A space or slot charter is a contract for use of a certain amount of space (but less than all of the space) on a ship or aircraft, and may be on a time or voyage basis. When used in connection with passenger aircraft this sort of charter may be referred to as the sale of block seats.

(ix) *Time charter.* A time charter is a contract for the use of a ship or aircraft for a specific period of time, during which the lessor of the ship or aircraft retains control of the navigation and management of the ship or aircraft (*i.e.,* the lessor continues to be responsible for the crew, supplies, repairs and maintenance, fees and insurance, charges, commissions and other expenses connected with the use of the ship or aircraft).

(x) *Voyage charter.* A voyage charter is a contract similar to a time charter except that the ship or aircraft is chartered for a specific voyage or flight rather than for a specific period of time.

(xi) *Wet lease.* A wet lease is the time or voyage charter of an aircraft.

(f) *International operation of ships or aircraft*—(1) *General rule.* The term *international operation of ships or aircraft* means the operation of ships or aircraft, as defined in paragraph (e) of this section, with respect to the carriage of passengers or cargo on voyages or flights that begin or end in the United States, as determined under paragraph (f)(2) of this section. The term does not include the carriage of passengers or cargo on a voyage or flight that begins and ends in the United States, even if the voyage or flight contains a segment extending beyond the territorial limits of the United States, unless the passenger disembarks or the cargo is unloaded outside the United States. Operation of ships or aircraft beyond the territorial limits of the United States does not constitute in itself international operation of ships or aircraft.

(2) *Determining whether income is derived from international operation of ships or aircraft.* Whether income is derived from international operation of ships or aircraft is determined on a passenger by passenger basis (as provided in paragraph (f)(2)(i) of this section) and on an item-of-cargo by item-of-cargo basis (as provided in paragraph (f)(2)(ii) of this section). In the case of the bareboat charter of a ship or the dry lease of an aircraft, whether the charter income for a particular period is derived from international operation of ships or aircraft is determined by reference to how the ship or aircraft is used by the lowest-tier lessee in the chain of lessees (as provided in paragraph (f)(2)(iii) of this section).

(i) *International carriage of passengers*—(A) *General rule.* Except in the case of a round trip described in paragraph (f)(2)(i)(B) of this section, income derived from the carriage of a passenger will be income from international operation of ships or aircraft if the passenger is carried between a beginning point in the United States and an ending point outside the United States, or vice versa. Carriage of a passenger will be treated as ending at the passenger's final destination even if, en route to the passenger's final destination, a stop is made at an intermediate point for refueling, maintenance, or other business reasons, provided the passenger does not change ships or aircraft at the intermediate point. Similarly, carriage of a passenger will be treated as beginning at the passenger's point of origin even if, en route to the passenger's final destination, a stop is made at an intermediate point, provided the passenger does not change ships or aircraft at the intermediate point. Carriage of a passenger will be treated as beginning or ending at a U.S. or foreign intermediate point if the passenger changes ships or aircraft at that intermediate point.

(B) *Round trip travel on ships.* In the case of income from the carriage of a passenger on a ship that begins its voyage in the United States, calls on one or more foreign intermediate ports, and returns to the same or another U.S. port, such income from carriage of a passenger on the entire voyage will be treated as income derived from international operation of ships or aircraft under paragraph (f)(2)(i)(A) of this section. This result obtains even if such carriage includes one or more intermediate stops at a U.S. port or ports and even if the passenger does not disembark at the foreign intermediate point.

(ii) *International carriage of cargo.* Income from the carriage of cargo will be income derived from international operation of ships or aircraft if the cargo is carried between a beginning point in the United States and an ending point outside the United States, or vice versa. Carriage of cargo will be treated as ending at the final destination of the cargo even if, en route to that final destination, a stop is made at a U.S. intermediate point, provided the cargo is transported to its ultimate destination on the same ship or aircraft. If the cargo is transferred to another ship or aircraft, the carriage of the cargo may nevertheless be treated as ending at its final destination, if the same taxpayer transports the cargo to and from the U.S. intermediate point and the cargo does not pass through customs at the U.S. intermediate point. Similarly, carriage of cargo will be treated as beginning at the cargo's point of origin, even if en route to its final destination a stop is made at a U.S. intermediate point, provided the cargo is transported to its ultimate destination on the same ship or aircraft. If the cargo is transferred to another ship or aircraft at the U.S. intermediate point, the carriage of the cargo may nevertheless be treated as beginning at the point of origin, if the same taxpayer transports the cargo to and from the U.S. intermediate point and the cargo does not pass through customs at the U.S. intermediate point. Repackaging, recontainerization, or any other activity involving the unloading of the cargo at the U.S. intermediate point does not change these results, provided the same taxpayer transports the cargo to and from the U.S. intermediate point and the cargo does not pass through customs at the U.S. intermediate point. A lighter vessel that carries cargo to, or picks up cargo from, a vessel located beyond the territorial limits of the United States and correspondingly loads or unloads that cargo at a U.S. port, carries cargo between a point in the United States and a point outside the United States. However, a lighter vessel that carries cargo to, or picks up cargo from, a vessel located within the territorial limits of the United States, and correspondingly loads or unloads that cargo at a U.S. port, is not engaged in international operation of ships or aircraft. Income from the carriage of military cargo on a voyage that begins in the United States, stops at a foreign intermediate port or a military prepositioning location, and returns to the same or another U.S. port without unloading its cargo at the foreign intermediate point, will nevertheless be treated as derived from international operation of ships or aircraft.

(iii) *Bareboat charter of ships or dry lease of aircraft used in international operation of ships or aircraft.* If a qualified foreign corporation bareboat charters a ship or dry leases an aircraft to a lessee, and the lowest tier lessee in the chain of ownership uses such ship or aircraft for the international carriage of passengers or cargo for hire, as described in paragraphs (f)(2)(i) and (ii) of this section, then the amount of charter income attributable to the period the ship or aircraft is used by the lowest

tier lessee is income from international operation of ships or aircraft. The foreign corporation must adopt a reasonable method consistently applied for determining the amount of the charter income that is attributable to such international operation of ships or aircraft. Two reasonable methods for determining the amount of charter income attributable to international operation of ships or aircraft are the following:

(A) *Ratio based on use.* Multiply the amount of charter income by a fraction, the numerator of which is the total number of days of uninterrupted travel on voyages or flights of such ship or aircraft between the United States and the farthest point or points where cargo or passengers are loaded en route to, or discharged en route from, the United States during the smaller of the taxable year or the particular charter period, and the denominator of which is the total number of days in the smaller of the taxable year or the particular charter period. For this purpose, the number of days during which the ship or aircraft is not generating transportation income, within the meaning of section 863(c)(2), are not included in the numerator of the fraction. For example, the numerator of the fraction does not include days during which the ship or aircraft is out of service while being repaired or maintained or days during which the ship is not being used to carry cargo or persons for hire.

(B) *Ratio based on gross income.* Multiply the amount of charter income by a fraction, the numerator of which is the U.S. source gross transportation income, as that term is defined in section 887(b), earned from the operation of the vessel or aircraft by the lowest tier lessee during the smaller of the taxable year or the particular charter period, and the denominator of which is the total gross income of the lessee from the operation of the ship or aircraft during the smaller of the taxable year or the particular charter period. An allocation based on the net income of such lessee, however, will not be considered reasonable for purposes of this paragraph (f)(2)(iii)(B).

(g) *Activities incidental to the international operation of ships or aircraft*—(1) *General rule.* Certain activities of a foreign corporation engaged in the international operation of ships or aircraft are so closely related to the international operation of ships or aircraft that they are considered incidental to such operation, and income derived by the foreign corporation from its performance of these incidental activities is deemed to be income derived from the international operation of ships or aircraft. Examples of such activities include—

(i) Temporary investment of working capital funds to be used in the international operation of ships or aircraft by the foreign corporation;

(ii) Sale of tickets by the foreign corporation engaged in the international operation of ships for the international carriage of passengers by ship on behalf of another corporation engaged in the international operation of ships;

(iii) Sale of tickets by the foreign corporation engaged in the international operation of aircraft for the international carriage of passengers by air on behalf of another corporation engaged in the international operation of aircraft;

(iv) Contracting with concessionaires for performance of services onboard during the international operation of the foreign corporation's ships or aircraft;

(v) Providing through a related or unrelated corporation (either by subcontracting or otherwise) for the carriage of cargo preceding or following the international carriage of cargo under a through bill of lading, airway bill or similar document;

(vi) To the extent not described in paragraph (g)(1)(iii) of this section, the sale or issuance by the foreign corporation engaged in the international operation of aircraft of interline or code-sharing tickets for the carriage of persons by air between a U.S. gateway and another U.S. city preceding or following international carriage of passengers, provided that all such flight segments are provided pursuant to the passenger's original invoice, ticket or itinerary;

(vii) Arranging for port city hotel accommodations within the United States for a passenger for the one night before or after the international carriage of that passenger by the foreign corporation engaged in the international operation of ships;

(viii) Bareboat charter of ships or dry lease of aircraft normally used by the foreign corporation in international operation of ships or aircraft but currently not needed, if the ship or aircraft is used by the lessee for international carriage of cargo or passengers;

(ix) Arranging by means of a space or slot charter for the carriage of cargo listed on a bill of lading or airway bill or similar document issued by the foreign corporation on the ship or aircraft of another corporation engaged in the international operation of ships or aircraft; and

(x) Rental of containers by the foreign corporation for use in the United States for a period not exceeding five days beyond the original delivery date by the foreign corporation to the consignee as stated on the bill of lading, provided that—

(A) The consignee takes delivery in the United States;

(B) The container is owned by or leased to the foreign corporation; and

(C) The container is identified (for example, by a 4 digit alpha code and serial number) on a bill of lading or attached manifest or similar document issued by the foreign corporation that provides for the transportation of cargo between points not solely within the United States.

(2) *Activities not considered incidental to the international operation of ships or aircraft.* Examples of activities that are not considered incidental to the international operation of ships or aircraft include—

(i) The sale of or arranging for train travel, bus transfers, or land tour packages;

(ii) Arranging for port city hotel accommodations within the United States other than as provided in paragraph (g)(1)(vii) of this section;

(iii) The sale of airline tickets or cruise tickets other than as provided in paragraph (g)(1)(ii), (iii), or (vi) of this section;

(iv) The sale or rental of real property;

(v) Treasury activities involving the investment of excess funds or funds awaiting repatriation, even if derived from the international operation of ships or aircraft;

(vi) The carriage of passengers or cargo on ships or aircraft on domestic legs of transportation not treated as either international operation of ships or aircraft under paragraph (f) of this section or as an activity that is incidental to such operation under paragraph (g)(1) of this section;

(vii) The carriage of cargo by bus, truck or rail by a foreign corporation between a U.S. inland point and a U.S. gateway port or airport preceding or following the international carriage of such cargo by the foreign corporation; and

(viii) Rental of containers attributable to the use of a container within the United States other than as provided in paragraph (g)(1)(x) of this section.

(3) *Services*—(i) *Ground services, maintenance and catering.* [Reserved]

(ii) *Other services.* [Reserved]

(4) *Activities involved in a pool, partnership, strategic alliance, joint operating agreement, code-sharing arrangement or other joint venture.* Notwithstanding paragraph (g)(1) of this section, an activity is considered incidental to the international operation of ships or aircraft by a foreign

corporation, and income derived by the foreign corporation with respect to such activity is deemed to be income derived from the international operation of ships or aircraft, if the activity is performed by or pursuant to a pool, partnership, strategic alliance, joint operating agreement, code-sharing arrangement or other joint venture in which such foreign corporation participates, provided that—

(i) Such activity is incidental to the international operation of ships or aircraft by the pool, partnership, strategic alliance, joint operating agreement, code-sharing arrangement or other joint venture, and provided that it is described in paragraph (e)(2)(i) of this section; or

(ii) Such activity would be incidental to the international operation of ships or aircraft by the foreign corporation, if it performed such activity itself, and provided the foreign corporation is engaged in the operation of ships or aircraft under paragraph (e)(1) of this section.

(h) *Equivalent exemption*—(1) *General rule.* A foreign country grants an equivalent exemption when it exempts from taxation income from the international operation of ships or aircraft derived by corporations organized in the United States. Whether a foreign country provides an equivalent exemption must be determined separately with respect to each category of income, as provided in paragraph (h)(2) of this section. An equivalent exemption may be available for income derived from the international operation of ships even though income derived from the international operation of aircraft may not be exempt, and vice versa. For rules regarding foreign corporations organized in countries that provide exemptions only through an income tax convention, see paragraph (h)(3) of this section. An equivalent exemption may exist where the foreign country—

(i) Generally imposes no tax on income, including income from the international operation of ships or aircraft;

(ii) Specifically provides a domestic law tax exemption for income derived from the international operation of ships or aircraft, either by statute, decree, or otherwise; or

(iii) Exchanges diplomatic notes with the United States, or enters into an agreement with the United States, that provides for a reciprocal exemption for purposes of section 883.

(2) *Determining equivalent exemptions for each category of income.* Whether a foreign country grants an equivalent exemption must be determined separately with respect to income from the international operation of ships and income from the international operation of aircraft for each category of income listed in (i) through (viii) of this section paragraph (h)(2). If an exemption is unavailable in the foreign country for a particular category of income, the foreign country is not considered to grant an equivalent exemption with respect to that category of income. Income in that category is not considered to be the subject of an equivalent exemption and thus is not eligible for exemption from income tax in the United States, even though the foreign country may grant an equivalent exemption for other categories of income. The following categories of income derived from the international operation of ships or aircraft may be exempt from United States income tax if an equivalent exemption is available—

(i) Income from the carriage of passengers and cargo;

(ii) Time or voyage (full) charter income of a ship or wet lease income of an aircraft;

(iii) Bareboat charter income of a ship or dry charter income of an aircraft;

(iv) Incidental bareboat charter income or incidental dry lease income;

(v) Incidental container-related income;

(vi) Income incidental to the international operation of ships or aircraft other than incidental income described in paragraph (h)(2)(iv) and (v) of this section;

(vii) Capital gains derived by a qualified foreign corporation engaged in the international operation of ships or aircraft from the sale, exchange or other disposition of a ship, aircraft, container or related equipment or other moveable property used by that qualified foreign corporation in the international operation of ships or aircraft; and

(viii) Income from participation in a pool, partnership, strategic alliance, joint operating agreement, code-sharing arrangement, international operating agency, or other joint venture described in paragraph (e)(2) of this section.

(3) *Special rules with respect to income tax conventions*—(i) *General rule.* Except as provided in paragraph (h)(3)(ii) of this section, if a corporation is organized in a foreign country that provides an exemption only through an income tax convention with the United States, the foreign corporation is not organized in a foreign country that grants an equivalent exemption. Rather, the foreign corporation must satisfy the terms of that convention to receive a benefit under the convention, and the foreign corporation may not claim an exemption under section 883. If the corporation is organized in a foreign country that offers an exemption under an income tax convention and also by some other means, such as by diplomatic note or domestic statutory law, the foreign corporation may choose annually whether to claim an exemption under section 883 based upon the equivalent exemption provided by such other means, under the income tax convention, or under both the income tax convention and section 883. Any such choice will apply with respect to all qualified income of the corporation from the international operation of ships or aircraft and cannot be made separately with respect to different categories of such income. If a foreign corporation bases its claim for an exemption on section 883, the foreign corporation must satisfy all of the requirements of this section to qualify for an exemption from U.S. income tax. See § 1.883–4(b)(3) for rules regarding satisfying the ownership test of paragraph (c)(2) of this section using shareholders resident in a foreign country that offers an exemption under an income tax convention.

(ii) *Participation in certain joint ventures.* Notwithstanding paragraph (h)(3)(i) of this section, if a corporation is organized in a foreign country that provides an exemption only through an income tax convention with the United States, the foreign corporation will be treated as organized in a foreign country that grants an equivalent exemption under section 883 with respect to a category of income derived through participation in a pool, partnership, strategic alliance, joint operating agreement, code-sharing arrangement or other joint venture described in paragraph (e)(2) of this section, but only where treaty benefits would be available under the treaty but for the treatment of the pool, partnership, strategic alliance, joint operating agreement, code-sharing arrangement or other joint venture as not fiscally transparent with respect to that category of income under the income tax laws of the foreign country in which the foreign corporate interest holder is organized for purposes of § 1.894–1(d)(3)(iii)(A).

(iii) *Independent interpretation of income tax conventions.* Nothing in this section and §§ 1.833–2 through 1.883–5 affects the rights or obligations under any income tax convention. The definitions provided in this section and §§ 1.833–2 through 1.883–5 shall neither give meaning to similar terms used in income tax conventions nor provide guidance regarding the scope of any exemption provided by such conventions.

(4) *Exemptions not qualifying as equivalent exemptions*—(i) *General rule.* Certain types of exemptions provided to corporations organized in the United States by foreign countries do not satisfy the equivalent exemption requirements of this section. The following paragraphs provide descriptions of some of the types of exemptions that do not qualify as equivalent exemptions for purposes of this section.

(ii) *Reduced tax rate or time limited exemption.* The exemption granted by the foreign country's law or income tax convention must be a complete exemption. The exemption may not constitute merely a reduction to a non-zero rate of tax levied against the income of corporations organized in the United States derived from the international operation of ships or aircraft or a temporary reduction to a zero rate of tax, such as in the case of a tax holiday.

(iii) *Inbound or outbound freight tax.* With respect to the carriage of cargo, the foreign country must provide an exemption from tax for income from transporting freight both inbound and outbound. For example, a foreign country that imposes tax only on outbound freight will not be treated as granting an equivalent exemption for income from transporting freight inbound into that country.

(iv) *Exemptions for limited types of cargo.* A foreign country must provide an exemption from tax for income from transporting all types of cargo. For example, if a foreign country were generally to impose tax on income from the international carriage of cargo but were to provide a statutory exemption for income from transporting agricultural products, the foreign country would not be considered to grant an equivalent exemption with respect to income from the international carriage of cargo, including agricultural products.

(v) *Territorial tax systems.* A foreign country with a territorial tax system will be treated as granting an equivalent exemption if it treats all income derived from the international operation of ships or aircraft derived by a U.S. corporation as entirely foreign source and therefore not subject to tax, including income derived from a voyage or flight that begins or ends in that foreign country.

(vi) *Countries that tax on a residence basis.* A foreign country that provides an equivalent exemption to corporations organized in the United States but also imposes a residence-based tax on certain corporations organized in the United States may nevertheless be considered to grant an equivalent exemption if the residence-based tax is imposed only on a corporation organized in the United States that maintains its center of management and control or other comparable attributes in that foreign country. If the residence-based tax is imposed on corporations organized in the United States and engaged in the international operation of ships or aircraft that are not managed and controlled in that foreign country, the foreign country shall not be treated as a qualified foreign country and shall not be considered to grant an equivalent exemption for purposes of this section.

(vii) *Exemptions within categories of income.* A foreign country must provide an exemption from tax for all income in a category of income, as defined in paragraph (h)(2) of this section. For example, a country that exempts income from the bareboat charter of passenger aircraft but not the bareboat charter of cargo aircraft does not provide an equivalent exemption. However, an equivalent exemption may be available for income derived from the international operation of ships even though income derived from the international operation of aircraft may not be exempt, and vice versa.

(i) *Treatment of possessions.* For purposes of this section, a possession of the United States will be treated as a foreign country. A possession of the United States will be considered to grant an equivalent exemption and will be treated as a qualified foreign country if it applies a mirror system of taxation. If a possession does not apply a mirror system of taxation, the possession may nevertheless be a qualified foreign country if, for example, it provides for an equivalent exemption through its internal law. A possession applies the mirror system of taxation if the United States Internal Revenue Code of 1986, as amended, applies in the possession with the name of the possession used instead of ''United States'' where appropriate.

(j) *Expenses related to qualified income.* If a qualified foreign corporation derives qualified income from the international operation of ships or aircraft as well as income that is not qualified income, and the non-qualified income is effectively connected with the conduct of a trade or business within the United States, the foreign corporation may not deduct from such non-qualified income any amount otherwise allowable as a deduction from qualified income, if that qualified income is excluded under this section. See section 265(a)(1).

Par. 4. Sections 1.883–2 through 1.883–5 are added to read as follows:

§ 1.883–2 Treatment of publicly-traded corporations.

(a) *General rule.* A foreign corporation satisfies the stock ownership test of § 1.883–1(c)(2) if it is considered a publicly-traded corporation and satisfies the substantiation and reporting requirements of paragraphs (e) and (f) of this section. To be considered a publicly-traded corporation, the stock of the foreign corporation must be primarily traded and regularly traded, as defined in paragraphs (c) and (d) of this section, respectively, on one or more established securities markets, as defined in paragraph (b) of this section, in either the United States or any qualified foreign country.

(b) *Established securities market*—(1) *General rule.* For purposes of this section, the term *established securities market* means, for any taxable year—

(i) A foreign securities exchange that is officially recognized, sanctioned, or supervised by a governmental authority of the qualified foreign country in which the market is located, and has an annual value of shares traded on the exchange exceeding $1 billion during each of the three calendar years immediately preceding the beginning of the taxable year;

(ii) A national securities exchange that is registered under section 6 of the Securities Act of 1934 (15 U.S.C. 78f);

(iii) A United States over-the-counter market, as defined in paragraph (b)(4) of this section;

(iv) Any exchange designated under a Limitation on Benefits article in a United States income tax convention; and

(v) Any other exchange that the Secretary may designate by regulation or otherwise.

(2) *Exchanges with multiple tiers.* If an exchange in a foreign country has more than one tier or market level on which stock may be separately listed or traded, each such tier shall be treated as a separate exchange.

(3) *Computation of dollar value of stock traded.* For purposes of paragraph (b)(1)(i) of this section, the value in U.S. dollars of shares traded during a calendar year shall be determined on the basis of the dollar value of such shares traded as reported by the International Federation of Stock Exchanges located in Paris, or, if not so reported, then by converting into U.S. dollars the aggregate value in local currency of the shares traded using an exchange rate equal to the average of the spot rates on the last day of each month of the calendar year.

(4) *Over-the-counter market.* An over-the-counter market is any market reflected by the existence of an

interdealer quotation system. An interdealer quotation system is any system of general circulation to brokers and dealers that regularly disseminates quotations of stocks and securities by identified brokers or dealers, other than by quotation sheets that are prepared and distributed by a broker or dealer in the regular course of business and that contain only quotations of such broker or dealer.

(5) *Discretion to determine that an exchange does not qualify as an established securities market.* The Commissioner may determine that a securities exchange that otherwise meets the requirements of paragraph (b) of this section does not qualify as an established securities market, if—

(i) The exchange does not have adequate listing, financial disclosure, or trading requirements (or does not adequately enforce such requirements); or

(ii) There is not clear and convincing evidence that the exchange ensures the active trading of listed stocks.

(c) *Primarily traded.* For purposes of this section, stock of a corporation is primarily traded in a country on one or more established securities markets, as defined in paragraph (b) of this section, if, with respect to each class of stock described in paragraph (d)(1)(i) of this section (relating to classes of stock relied on to meet the regularly traded test)—

(1) The number of shares in each such class that are traded during the taxable year on all established securities markets in that country exceeds

(2) The number of shares in each such class that are traded during that year on established securities markets in any other single country.

(d) *Regularly traded*—(1) *General rule.* For purposes of this section, stock of a corporation is regularly traded on one or more established securities markets, as defined in paragraph (b) of this section, if—

(i) One or more classes of stock of the corporation that, in the aggregate, represent more than 50 percent of the total combined voting power of all classes of stock of such corporation entitled to vote and of the total value of the stock of such corporation are listed on such market or markets during the taxable year; and

(ii) With respect to each class relied on to meet the more than 50 percent requirement of paragraph (d)(1)(i) of this section—

(A) Trades in each such class are effected, other than in *de minimis* quantities, on such market or markets on at least 60 days during the taxable year (or ⅙ of the number of days in a short taxable year); and

(B) The aggregate number of shares in each such class that are traded on such market or markets during the taxable year are at least 10 percent of the average number of shares outstanding in that class during the taxable year (or, in the case of a short taxable year, a percentage that equals at least 10 percent of the average number of shares outstanding in that class during the taxable year multiplied by the number of days in the short taxable year, divided by 365).

(2) *Classes of stock traded on a domestic established securities market treated as meeting trading requirements.* A class of stock that is traded during the taxable year on an established securities market located in the United States shall be considered to meet the trading requirements of paragraph (d)(1)(ii) of this section if the stock is regularly quoted by dealers making a market in the stock. A dealer makes a market in a stock only if the dealer regularly and actively offers to, and in fact does, purchase the stock from, and sell the stock to, customers who are not related persons (as defined in section 954(d)(3)) with respect to the dealer in the ordinary course of a trade or business.

(3) *Closely-held classes of stock not treated as meeting trading requirements*—(i) *General rule.* Except as provided in paragraph (d)(3)(ii) of this section, a class of stock of a foreign corporation that otherwise meets the requirements of paragraph (d)(1) or (2) of this section shall not be treated as meeting such requirements for a taxable year if, at any time during the taxable year, one or more persons who own at least 5 percent of the vote and value of the outstanding shares of the class of stock, as determined under paragraph (d)(3)(iii) of this section (each a 5-percent shareholder), own, in the aggregate, 50 percent or more of the vote and value of the outstanding shares of the class of stock. If one or more 5-percent shareholders own, in the aggregate, 50 percent or more of the vote and value of the outstanding shares of the class of stock, such shares held by the 5-percent shareholders will constitute a closely-held block of stock.

(ii) *Exception.* Paragraph (d)(3)(i) of this section shall not apply to a class of stock if the foreign corporation can establish that qualified shareholders, as defined in § 1.883–4(b), applying the attribution rules of § 1.883–4(c), own sufficient shares in the closely-held block of stock to preclude non-qualified shareholders in the closely-held block of stock from owning 50 percent or more of the total value of the class of stock of which the closely-held block is a part for more than half the number of days during the taxable year. Any shares that are owned, after application of the attribution rules in § 1.883–4(c), by a qualified shareholder shall not also be treated as owned by a non-qualified shareholder in the chain of ownership for purposes of the preceding sentence. A foreign corporation must obtain the documentation described in § 1.883–4(d) from the qualified shareholders relied upon to satisfy this exception. However, no person shall be treated for purposes of this paragraph (d)(3) as a qualified shareholder if such person holds an interest in the class of stock directly or indirectly through bearer shares.

(iii) *Five-percent shareholders*—(A) *Related persons.* Solely for purposes of determining whether a person is a 5-percent shareholder, persons related within the meaning of section 267(b) shall be treated as one person. In determining whether two or more corporations are members of the same controlled group under section 267(b)(3), a person is considered to own stock owned directly by such person, stock owned through the application of section 1563(e)(1), and stock owned through the application of section 267(c). In determining whether a corporation is related to a partnership under section 267(b)(10), a person is considered to own the partnership interest owned directly by such person and the partnership interest owned through the application of section 267(e)(3).

(B) *Investment companies.* For purposes of this paragraph (d)(3), an investment company registered under the Investment Company Act of 1940, as amended, shall not be treated as a 5-percent shareholder if no person owns both 5 percent or more of the value of the outstanding interests in the investment company (applying the attribution rules of § 1.883–4(c)) and 5-percent or more of the value of the shares of the class of stock of the foreign corporation seeking qualified foreign corporation status (applying the attribution rules of § 1.883–4(c)).

(4) *Anti-abuse rule.* Trades between or among related persons described in section 267(b), as modified by paragraph (d)(3)(iii) of this section, and trades conducted in order to meet the requirements of paragraph (d)(1) of this section shall be disregarded. A class of stock shall not be treated as meeting the trading requirements of paragraph (d)(1) of this section if there is a pattern of trades conducted to meet the requirements of that paragraph. For example, trades between two persons

that occur several times during the taxable year may be treated as an arrangement or a pattern of trades conducted to meet the trading requirements of paragraph (d)(1)(ii) of this section.

(5) *Example.* The closely-held test in paragraph (d)(3) of this section is illustrated by the following example:

Example. Closely-held exception—(i) Facts. X is a foreign corporation organized in a qualified foreign country and engaged in the international operation of ships. X has one class of stock, which is primarily traded on an established securities market in the qualified foreign country. The stock of X meets the regularly traded requirements of paragraph (d)(1)(ii) of this section without regard to paragraph (d)(3)(i) of this section. A, B, C and D are four members of the corporation's founding family who each own, during the entire taxable year, 25 percent of the stock of Hold Co, a company that issues registered shares. Hold Co, in turn, owns 60 percent of the stock of X during the entire taxable year. The remaining 40 percent of the stock of X is not owned by any 5-percent shareholder, as determined under paragraph (d)(3)(iii) of this section. A, B, and C are not residents of a qualified foreign country, but D is a resident of a qualified foreign country.

(ii) *Analysis.* Because Hold Co owns 60 percent of the stock of X for more than half the number of days during the taxable year, Hold Co is a 5-percent shareholder that owns 50 percent or more of the value of the stock of X. Thus, the shares owned by Hold Co constitute a closely-held block of stock. Under paragraph (d)(3)(i) of this section, the stock of X will not be regularly traded within the meaning of paragraph (d)(1) of this section unless X can establish, under paragraph (d)(3)(ii) of this section, that qualified shareholders within the closely-held block of stock own sufficient shares in the closely-held block of stock to preclude non-qualified shareholders in the closely-held block of stock from owning 50 percent or more of the value of the outstanding shares in the class of stock for more than half the number of days during the taxable year. A, B, and C are not qualified shareholders within the meaning of § 1.883–4(b) because they are not residents of a qualified foreign country, but D is a resident of a qualified foreign country and therefore is a qualified shareholder. D owns 15 percent of the outstanding shares of X through Hold Co (25 percent × 60 percent = 15 percent) while A, B, and C in the aggregate own 45 percent of the outstanding shares of X through Hold Co. D, therefore, owns sufficient shares in the closely-held block of stock to preclude the non-qualified shareholders in the closely-held block of stock, A, B and C, from owning 50 percent or more of the value of the class of stock (60 percent − 15 percent = 45 percent) of which the closely-held block is a part. Provided that X obtains from D the documentation described in § 1.883–4(d), X's sole class of stock meets the exception in paragraph (d)(3)(ii) of this section and will not be disqualified from the regularly traded test by virtue of paragraph (d)(3)(i) of this section.

(e) *Substantiation that a foreign corporation is publicly traded*—(1) *General rule.* A foreign corporation that relies on the publicly traded test of this section to meet the stock ownership test of § 1.883–1(c)(2) must substantiate that the stock of the foreign corporation is primarily and regularly traded on one or more established securities markets, as that term is defined in paragraph (b) of this section. If one of the classes of stock on which the foreign corporation relies to meet this test is closely-held within the meaning of paragraph (d)(3)(i) of this section, the foreign corporation must obtain an ownership statement described in § 1.883–4(d) from each qualified shareholder and intermediary that it relies upon to satisfy the exception to the closely-held test, but only to the extent such statement would be required if the foreign corporation were relying on the qualified shareholder stock ownership test of § 1.883–4 with respect to those shares of stock. The foreign corporation must also maintain and provide to the Commissioner upon request a list of its shareholders of record and any other relevant information known to the foreign corporation supporting its entitlement to an exemption under this section.

(2) *Availability and retention of documents for inspection.* The documentation described in paragraph (e)(1) of this section must be retained by the corporation seeking qualified foreign corporation status until the expiration of the statute of limitations for the taxable year of the foreign corporation to which the documentation relates. Such documentation must be made available for inspection by the Commissioner at such time and such place as the Commissioner may request in writing.

(f) *Reporting requirements.* A foreign corporation relying on this section to satisfy the stock ownership test of § 1.883–1(c)(2) must provide the following information in addition to the information required in § 1.883–1(c)(3) to be included in its Form 1120F for the taxable year. The information must be current as of the end of the corporation's taxable year and must include the following—

(1) The name of the country in which the stock is primarily traded;

(2) The name of the established securities market or markets on which that the stock is listed;

(3) A description of each class of stock relied upon to meet the requirements of paragraph (d) of this section, including the number of shares issued and outstanding as of the close of the taxable year;

(4) For each class of stock relied upon to meet the requirements of paragraph (d) of this section, if one or more 5-percent shareholders, as described in paragraph (d)(3)(iii) of this section, own in the aggregate 50 percent or more of the value of the outstanding shares of that class of stock at any time during the taxable year—

(i) The highest total percentage of the value of the class of stock that is owned by 5-percent shareholders, as described in paragraph (d)(3)(iii) of this section, at any time during the taxable year;

(ii) For each qualified shareholder who owns or is treated as owning stock in the closely-held block upon whom the corporation intends to rely to satisfy the exception to the closely-held test of paragraph (d)(3)(ii) of this section—

(A) The name of each such shareholder;

(B) The percentage of the total value of the class of stock held by each such shareholder;

(C) The address of record of each such shareholder;

(D) The country of residence of each such shareholder, determined under § 1.883–4(b)(2) (residence of individual shareholders) or § 1.883–4(d)(3) (special rules for residence of certain shareholders);

(E) The portion of the taxable year of the corporation during which the stock was closely-held without regard to the exception in paragraph (d)(3)(ii) of this section; and

(5) Any other relevant information specified by Form 1120F and its accompanying instructions.

§ 1.883–3 Treatment of controlled foreign corporations.

(a) *General rule.* A foreign corporation satisfies the stock ownership test of § 1.883–1(c)(2) if it is a controlled foreign corporation (CFC), as defined in section 957(a), and satisfies the income inclusion test in paragraph (b) of this section and the substantiation and reporting requirements of paragraphs (c) and (d) of this section, respectively. A CFC that fails the income inclusion test of paragraph (b) of this section will not be a qualified foreign corporation unless it meets either the publicly traded test of § 1.883–2(a) or the qualified shareholder stock ownership test of § 1.883–4(a).

(b) *Income inclusion test*—(1) *General rule.* A CFC shall not be considered to satisfy the requirements of paragraph (a) of this section unless more than 50 percent of the CFC's adjusted net foreign base company income (as defined in § 1.954–1(d) and as increased or decreased by section 952(c)) derived from the international operation of ships

or aircraft is includible in the gross income of one or more United States citizens, individual residents of the United States or domestic corporations, pursuant to section 951(a)(1)(A) or another provision of the Internal Revenue Code, for the taxable years of such persons in which the taxable year of the CFC ends.

(2) *Examples.* The income inclusion test of paragraph (b)(1) of this section is illustrated in the following examples:

Example 1. Ship Co is a CFC organized in a qualified foreign country. All of ship Co's income is foreign base company shipping income that is derived from the international operation of ships. All of its shares are owned by a domestic partnership that is a United States shareholder for purposes of section 951(b). All of the partners in the domestic partnership are citizens and residents of foreign countries. Ship Co fails the income inclusion test of paragraph (b)(1) of this section because no amount of Ship Co's subpart F income that is adjusted net foreign base company income derived from the international operation of ships is includible under any provision of the Internal Revenue Code in the gross income of one or more United States citizens, individual residents of the United States or domestic corporations. Therefore, Ship Co must satisfy the qualified shareholder stock ownership test of § 1.883–4(a), in order to satisfy the stock ownership test of § 1.883–1(c)(2) and to be considered a qualified foreign corporation.

Example 2. Ship Co is a CFC organized in a qualified foreign country. All of ship Co's income is foreign base company shipping income that is derived from the international operation of ships. Corp A, a domestic corporation, owns 50 percent of the value of the stock of Ship Co. X, a domestic partnership, owns the remaining 50 percent of the value of the stock of Ship Co. A United States citizen is a partner owning a 10 percent income interest in X. Individual partners owning 80 percent of X are citizens and residents of foreign countries. There are no special allocations of partnership income. Ship Co satisfies the income inclusion test of paragraph (b)(1) of this section because 55 percent (50 percent + (10 percent x 50 percent)) of the subpart F income that is adjusted net foreign base company income derived from the international operation of ships would be includible in the gross income of U.S. citizens, individual residents of the United States or domestic corporations. If Ship Co satisfies the substantiation and reporting requirements of paragraphs (c) and (d) of this section, it will meet the stock ownership test of § 1.883–1(c)(2).

(c) *Substantiation of CFC stock ownership*—(1) *General rule.* A foreign corporation that relies on this section to satisfy the stock ownership test of § 1.883–1(c)(2) must substantiate all the facts necessary to satisfy the Commissioner that it qualifies under the income inclusion test of paragraph (b)(1) of this section. For purposes of the income inclusion test, if the CFC has one or more United States shareholders, as defined in section 951(b), that are domestic partnerships, estates, or trusts, the pro rata share of the subpart F income includible in the gross income of such shareholders will only be treated as includible in the income of any partner, beneficiary or other interest owner of such United States shareholder that is a United States citizen, resident of the United States or a domestic corporation if the CFC obtains the documentation described in paragraph (c)(2) of this section.

(2) *Documentation from certain United States shareholders*—(i) *General rule.* A CFC only meets the documentation requirements of paragraph (c)(1) of this section if the CFC obtains the following documentation with respect to each United States shareholder, as defined in section 951(b), that is a partnership, estate or trust, for the taxable year of the shareholder which ends with or within the taxable year of the CFC—

(A) A copy of the Form 5471, ''Information Return of U.S. Persons with Respect to Certain Foreign Corporations,'' filed with the controlling United States shareholder's return;

(B) A written statement, signed under penalties of perjury by a person authorized to sign the U.S. Federal tax return of each such United States shareholder, providing the following information with respect to each United States citizen, individual resident of the United States or domestic corporation that is a partner, beneficiary or other interest owner of each such United States shareholder and upon whom the CFC intends to rely to satisfy the income inclusion test of paragraph (b)(1) of this section—

(*1*) The name, address from the CFC's corporate records (that is a specific street address and not a non-residential address, such as a post office box or in care of a financial intermediary or stock transfer agent), and taxpayer identification number of the interest owner;

(*2*) The interest owner's proportionate interest in the United States shareholder that reflects that owner's share of subpart F income required to be included in income on such interest owner's U.S. Federal income tax return;

(*3*) The percentage of the vote and the percentage of the value of shares of the CFC owned by each such interest owner pursuant to the attribution rules in § 1.883–4(c)(2)(i); and

(C) Any other information as specified in guidance published by the Internal Revenue Service (see § 601.601(d)(2) of this chapter).

(ii) *Availability and retention of documents for inspection.* The documentation described in paragraph (c)(2)(i) of this section must be retained by the corporation seeking qualified foreign corporation status (the CFC) until the expiration of the statute of limitations for the taxable year of the CFC to which the documentation relates. Such documentation must be made available for inspection by the Commissioner at such place as the Commissioner may request in writing.

(d) *Reporting requirements.* A foreign corporation that relies on the CFC test of this section to satisfy the stock ownership test of § 1.883–1(c)(2) must provide the following information in addition to the information required in § 1.883–1(c)(3) to be included in its Form 1120F for the taxable year. The information must be current as of the end of the corporation's taxable year and must include the following—

(1) The name, address from the CFC's corporate records (that is a specific street address and not a non-residential address, such as a post office box or in care of a financial intermediary or stock transfer agent), and taxpayer identification number of each United States shareholder, as defined in section 951(b), of the CFC;

(2) The percentage of the vote and value of the shares of the CFC that is owned by each United States shareholder, as defined in section 951(b);

(3) If one or more of the United States shareholders is a domestic partnership, estate or trust, the name, address, taxpayer identification number and percentage of the vote and the percentage of the value of shares of the CFC owned (as determined under § 1.883–4(c)(2)(i)) by each interest owner of each such United States shareholder that is a United States citizen, individual resident of the United States or a domestic corporation; and

(4) Any other relevant information specified by Form 1120F and its accompanying instructions.

§ 1.883–4 Qualified shareholder stock ownership test.

(a) *General rule.* A foreign corporation satisfies the stock ownership test of § 1.883–1(c)(2) if more than 50 percent of the value of its outstanding shares is owned, or treated as owned by applying the attribution rules of paragraph (c) of this section, for at least half of the number of days in the foreign corporation's taxable year by one or more qualified shareholders, as defined

in paragraph (b) of this section. A shareholder may be a qualified shareholder with respect to one category of income while not being a qualified shareholder with respect to another. A foreign corporation will not be considered to satisfy the stock ownership test of A1.883–1(c)(2) pursuant to this section unless the foreign corporation meets the substantiation and reporting requirements of paragraphs (d) and (e) of this section.

(b) *Qualified shareholder*—(1) *General rule.* A shareholder is a qualified shareholder only if the shareholder—

(i) With respect to the category of income for which the foreign corporation is seeking an exemption, is—

(A) An individual not described in paragraph (b)(1)(i)(E) or (F) of this section, who is a resident, as described in paragraph (b)(2) of this section, of a qualified foreign country, as defined in § 1.883–1(d);

(B) The government of a qualified foreign country (or a political subdivision or local authority of such country);

(C) A foreign corporation that is organized in a qualified foreign country and meets the publicly traded test of § 1.883–2(a);

(D) A not-for-profit organization described in paragraph (b)(4) of this section that is not a pension fund as defined in paragraph (b)(5) of this section and that is organized in a qualified foreign country;

(E) An individual beneficiary of a pension fund (as defined in paragraph (b)(5)(iv) of this section) that is administered in or by a qualified foreign country, who is treated as a resident under paragraph (d)(3)(iii) of this section, of a qualified foreign country; or

(F) A shareholder of foreign corporation that is an airline covered by a bilateral Air Services Agreement in force between the United States and the qualified foreign country in which the airline is organized, provided the United States has not waived the ownership requirement in the Air Services Agreement, or that the ownership requirement has not otherwise been made ineffective;

(ii) Does not own its interest in the foreign corporation through bearer shares, either directly or by applying the attribution rules of paragraph (c) of this section; and

(iii) Provides to the foreign corporation the documentation required in paragraph (d) of this section and the foreign corporation meets the reporting requirements of paragraph (e) of this section with respect to such shareholder.

(2) *Residence of individual shareholders*—(i) *General rule.* Except for an individual described in paragraph (b)(1)(i)(E) or (F) of this section, an individual is a resident of a qualified foreign country only if the individual is fully liable to tax as a resident in such country (e.g., an individual who is liable to tax on a remittance basis in a foreign country will not be treated as a resident of that country) and, in addition—

(A) The individual has a tax home, within the meaning of paragraph (b)(2)(ii) of this section, in that qualified foreign country for 183 days or more of the taxable year; or

(B) The individual is treated as a resident of a qualified foreign country based on special rules pursuant to paragraph (d)(3) of this section.

(ii) *Tax home.* For purposes of this section, an individual's tax home is considered to be located at the individual's regular or principal (if more than one regular) place of business. If the individual has no regular or principal place of business because of the nature of his business (or lack of a business), then the individual's tax home is located at his regular place of abode in a real and substantial sense. If an individual has no regular or principal place of business and no regular place of abode in a real and substantial sense in a qualified foreign country for 183 days or more of the taxable year, that individual does not have a tax home for purposes of this section. A foreign estate or trust, as defined in section 7701(a)(31), does not have a tax home for purposes of this section. See paragraph (c)(3) of this section for alternative rules in the case of trusts or estates.

(3) *Certain income tax convention restrictions applied to shareholders.* For purposes of paragraph (b)(1) of this section, a shareholder described in paragraph (b)(1) of this section may be considered a resident of, or organized in, a qualified foreign country if that foreign country provides an exemption by means of an income tax convention with the United States, but only if the shareholder demonstrates that it is treated as a resident of that country under the convention and qualifies for benefits under any Limitation on Benefits article, and that the convention provides an exemption for the relevant category of income. If the convention has a requirement in the shipping and air transport article other than residence, such as place of registration or documentation of the ship or aircraft, the shareholder is not required to demonstrate that the corporation seeking qualified foreign corporation status could satisfy any such additional requirement.

(4) *Not-for-profit organizations.* The term *not-for-profit organization* means an organization that meets the following requirements—

(i) It is a corporation, association taxable as a corporation, trust, fund, foundation, league or other entity operated exclusively for religious, charitable, educational, or recreational purposes, and not organized for profit;

(ii) It is generally exempt from tax in its country of organization by virtue of its not-for-profit status; and

(iii) Either—

(A) More than 50 percent of its annual support is expended on behalf of persons described in paragraph (b)(1)(i)(A) of this section (see paragraph (d)(3)(v) of this section for rules regarding the residence of individual beneficiaries); or

(B) More than 50 percent of its annual support is derived from persons described in paragraph (b)(1)(i)(A) of this section (see paragraph (d)(3)(v) of this section for rules regarding the residence of individual supporters).

(5) *Pension funds*—(i) *Pension fund defined.* The term *pension fund* shall mean a government pension fund or a non-government pension fund, as those terms are defined, respectively, in paragraphs (b)(5)(ii) and (iii) of this section, that is a trust, fund, foundation, or other entity that is established exclusively for the benefit of employees or former employees of one or more employers, the principal purpose of which is to provide retirement, disability, and death benefits to beneficiaries of such entity and persons designated by such beneficiaries in consideration for prior services rendered.

(ii) *Government pension funds.* A government pension fund is a pension fund that is a controlled entity of a foreign sovereign within the principles of § 1.892–2T(c)(1) (relating to pension funds established for the benefit of employees or former employees of a foreign government).

(iii) *Non-government pension funds.* A non-government pension fund is a pension fund that—

(A) Is administered in a foreign country and is subject to supervision or regulation by a governmental authority (or other authority delegated to perform such supervision or regulation by a governmental authority) in such country;

(B) Is generally exempt from income taxation in its country of administration;

(C) Has 100 or more beneficiaries; and

(D) The trustees, directors or other administrators of which pension fund provide the documentation required in paragraph (d) of this section.

(iv) *Beneficiary of a pension fund.* The term *beneficiary of a pension fund* shall mean any person who has made contributions to a pension fund, as that term is defined in paragraph (b)(5)(i) of this section, or on whose behalf contributions have been made, and who is currently receiving retirement, disability, or death benefits from the pension fund or can reasonably be expected to receive such benefits in the future, whether or not the person's right to receive benefits from the fund has vested. See paragraph (c)(7) of this section for rules regarding the computation of stock ownership through non-government pension funds.

(c) *Rules for determining constructive ownership*—(1) *General rules for attribution.* For purposes of applying paragraph (a) of this section and the exception to the closely-held test in § 1.883–2(d)(3)(ii), stock owned by or for a corporation, partnership, trust, estate, or mutual insurance company or similar entity shall be treated as owned proportionately by its shareholders, partners, beneficiaries, grantors, or other interest holders, as provided in paragraphs (c)(2) through (7) of this section. The proportionate interest rules of this paragraph (c) shall apply successively upward through a chain of ownership, and a person's proportionate interest shall be computed for the relevant days or period taken into account in determining whether a foreign corporation satisfies the requirements of paragraph (a) of this section. Stock treated as owned by a person by reason of this paragraph (c) shall be treated as actually owned by such person for purposes of this section. An owner of an interest in an association taxable as a corporation shall be treated as a shareholder of such association for purposes of this paragraph (c). No attribution will apply to an interest held directly or indirectly through bearer shares.

(2) *Partnerships*—(i) *General rule.* A partner shall be treated as having an interest in stock of a foreign corporation owned by a partnership in proportion to the least of—

(A) The partner's percentage distributive share of the partnership's dividend income from the stock;

(B) The partner's percentage distributive share of gain from disposition of the stock by the partnership; or

(C) The partner's percentage distributive share of the stock (or proceeds from the disposition of the stock) upon liquidation of the partnership.

(ii) *Partners resident in the same country.* For purposes of this paragraph, all qualified shareholders that are partners in a partnership and that are residents of, or organized in, the same qualified foreign country shall be treated as one partner. Thus, the percentage distributive shares of dividend income, gain and liquidation rights of all qualified shareholders that are partners in a partnership and that are residents of, or organized in, the same qualified foreign country are aggregated prior to determining the least of the three percentages set out in paragraph (c)(2)(i) of this section. For the meaning of the term *resident,* see paragraph (b)(2) of this section.

(iii) *Examples.* The rules of paragraph (c)(2)(ii) of this section are illustrated by the following examples:

Example 1. Stock held solely by qualified shareholders through a partnership. Country X grants an equivalent exemption. A and B are individual residents of Country X and are qualified shareholders within the meaning of paragraph (b)(1) of this section. A and B are the sole partners of Partnership P. P's only asset is the stock of Corporation Z, a Country X corporation seeking a reciprocal exemption under this section. A's distributive share of P's income and gain on the disposition of P's assets is 80 percent, but A's distributive share of P's assets (or the proceeds therefrom) on P's liquidation is 20 percent. B's distributive share of P's income and gain is 20 percent and B is entitled to 80 percent of the assets (or proceeds therefrom) on P's liquidation. Under the attribution rules of paragraph (c)(2)(ii) of this section, A and B will be treated as a single partner owning in the aggregate 100 percent of the stock of Z owned by P.

Example 2. Stock held by both qualified and non-qualified shareholders through a partnership. Assume the same facts as in *Example 1* except that C, an individual who is not a resident of a qualified foreign country, is also a partner in P and that C's distributive share of P's income is 60 percent. The distributive shares of A and B are the same as in *Example 1,* except that A's distributive share of income is 20 percent. Under the attribution rules of paragraph (c)(2)(ii) of this section, qualified shareholders A and B will be treated as a single partner owning in the aggregate 40 percent of the stock of Z owned by P (i.e., the lowest aggregate percentage of A and B's distributive shares of dividend income (40 percent), gain (100 percent), and liquidation rights (100 percent) with respect to the Z stock). Thus, only 40 percent of the Z stock is treated as owned by qualified shareholders.

Example 3. Stock held through tiered partnerships. Country X grants an equivalent exemption. A and B are individual residents of Country X and are qualified shareholders within the meaning of paragraph (b)(1) of this section. A and B are the sole partners of Partnership P. P is a partner in Partnership P1, which owns the stock of Corporation Z, a Country X corporation seeking a reciprocal exemption under this section. Assume that P's distributive share of the dividend income, gain and liquidation rights with respect to the Z stock held by P1 is 40 percent. Assume that of the remaining partners of P1 only D is a qualified shareholder. D's distributive share of P1's dividend income and gain is 15 percent; D's distributive share of P1's assets on liquidation is 25 percent. Under the attribution rules of paragraph (c)(2)(ii) of this section, A and B, treated as a single partner, will own 40 percent of the Z stock owned by P1 (100 percent x 40 percent) and D will be treated as owning 15 percent of the Z stock owned by P1 (the least of D's dividend income (15 percent), gain (15 percent), and liquidation rights (25 percent) with respect to the Z stock). Thus, 55 percent of the Z stock owned by P1 is treated as owned by qualified shareholders.

(3) *Trusts and estates*—(i) *Beneficiaries.* In general, an individual shall be treated as having an interest in stock of a foreign corporation owned by a trust or estate in proportion to the individual's actuarial interest in the trust or estate, as provided in section 318(a)(2)(B)(i), except that an income beneficiary's actuarial interest in the trust will be determined as if the trust's only asset were the stock. The interest of a remainder beneficiary in stock will be equal to 100 percent minus the sum of the percentages of any interest in the stock held by income beneficiaries. The ownership of an interest in stock owned by a trust shall not be attributed to any beneficiary whose interest cannot be determined under the preceding sentence, and any such interest, to the extent not attributed by reason of this paragraph (c)(3)(i), shall not be considered owned by a beneficiary unless all potential beneficiaries with respect to the stock are qualified shareholders. In addition, a beneficiary's actuarial interest will be treated as zero to the extent that someone other than the beneficiary is treated as owning the stock under paragraph (c)(3)(ii) of this section. A substantially separate and independent share of a trust, within the meaning of section 663(c), shall be treated as a separate trust for purposes of this paragraph (c)(3)(i), provided that payment of income, accumulated income or corpus of a share of one beneficiary (or group of beneficiaries) cannot affect the proportionate share of income, accumulated income or corpus of another beneficiary (or group of beneficiaries).

(ii) *Grantor trusts.* A person is treated as the owner of stock of a foreign corporation owned by a trust to the extent that the stock is included in the portion of the trust that is treated as owned by the person under sections 671 through 679 (relating to grantors and others treated as substantial owners).

(4) *Corporations that issue stock.* A shareholder of a corporation that issues stock shall be treated as owning stock of a foreign corporation that is owned by such corporation on any day in a proportion that equals the value of the stock owned by such shareholder to the value of all stock of such corporation. If, however, there is an agreement, express or implied, that a shareholder of a corporation will not receive distributions from the earnings of stock owned by the corporation, the shareholder will not be treated as owning that stock owned by the corporation.

(5) *Taxable non-stock corporations.* A taxable non-stock corporation that is entitled in its country of organization to deduct from its taxable income amounts distributed for charitable purposes may deem a recipient of such charitable distributions to be a shareholder of such taxable non-stock corporation in the same proportion as the amount that such beneficiary receives in the taxable year bears to the total income of such taxable non-stock corporation in the taxable year. Whether each such recipient is a qualified shareholder may then be determined under paragraph (b) of this section or under the special rules of paragraph (d)(3)(vii) of this section.

(6) *Mutual insurance companies and similar entities.* Stock held by a mutual insurance company, mutual savings bank, or similar entity (including an association taxable as a corporation that does not issue stock interests) shall be considered owned proportionately by the policy holders, depositors, or other owners in the same proportion that such persons share in the surplus of such entity upon liquidation or dissolution.

(7) *Computation of beneficial interests in non-government pension funds.* Stock held by a pension fund shall be considered owned by the beneficiaries of the fund equally on a pro-rata basis if—

(i) The pension fund meets the requirements of paragraph (b)(5)(iii) of this section;

(ii) The trustees, directors or other administrators of the pension fund have no knowledge, and no reason to know, that a pro-rata allocation of interests of the fund to all beneficiaries would differ significantly from an actuarial allocation of interests in the fund (or, if the beneficiaries' actuarial interest in the stock held directly or indirectly by the pension fund differs from the beneficiaries's actuarial interest in the pension fund, the actuarial interests computed by reference to the beneficiaries' actuarial interest in the stock);

(iii) Either—

(A) Any overfunding of the pension fund would be payable, pursuant to the governing instrument or the laws of the foreign country in which the pension fund is administered, only to, or for the benefit of, one or more corporations that are organized in the country in which the pension fund is administered, individual beneficiaries of the pension fund or their designated beneficiaries, or social or charitable causes (the reduction of the obligation of the sponsoring company or companies to make future contributions to the pension fund by reason of overfunding shall not itself result in such overfunding being deemed to be payable to or for the benefit of such company or companies); or

(B) The foreign country in which the pension fund is administered has laws that are designed to prevent overfunding of a pension fund and the funding of the pension fund is within the guidelines of such laws; or

(C) The pension fund is maintained to provide benefits to employees in a particular industry, profession, or group of industries or professions and employees of at least 10 companies (other than companies that are owned or controlled, directly or indirectly, by the same interests) contribute to the pension fund or receive benefits from the pension fund; and

(iv) The trustees, directors or other administrators provide the relevant documentation as required in paragraph (d) of this section.

(d) *Substantiation of stock ownership*—(1) *General rule.* A foreign corporation that relies on this section to satisfy the stock ownership test of § 1.883–1(c)(2), must establish all the facts necessary to satisfy the Commissioner that more than 50 percent of the value of its shares is owned, or treated as owned applying paragraph (c) of this section, by qualified shareholders. A foreign corporation cannot meet this requirement with respect to any stock that is issued in bearer form. A shareholder that holds shares in the foreign corporation either directly or indirectly in bearer form cannot be a qualified shareholder.

(2) *Application of general rule*—(i) *Ownership statements.* Except as provided in paragraph (d)(3) of this section, a person shall only be treated as a qualified shareholder of a foreign corporation if—

(A) For the relevant period, the person completes an ownership statement described in paragraph (d)(4) of this section or has a valid ownership statement in effect under paragraph (d)(2)(ii) of this section;

(B) In the case of a person owning stock in the foreign corporation indirectly through one or more intermediaries (including mere legal owners or recordholders acting as nominees), each intermediary in the chain of ownership between that person and the foreign corporation seeking qualified foreign corporation status completes an intermediary ownership statement described in paragraph (d)(4)(v) of this section or has a valid intermediary ownership statement in effect under paragraph (d)(2)(ii) of this section; and

(C) The foreign corporation seeking qualified foreign corporation status obtains the statements described in paragraphs (d)(2)(i)(A) and (B) of this section.

(ii) *Three-year period of validity.* The ownership statements required in paragraph (d)(2)(i) of this section shall remain valid until the earlier of the last day of the third calendar year following the year in which the ownership statement is signed, or the day that a change of circumstance occurs that makes any information on the ownership statement incorrect. For example, an ownership statement signed on September 30, 2000, remains valid through December 31, 2003, unless a change of circumstance occurs that makes any information on the ownership statement incorrect.

(3) *Special rules*—(i) *Substantiating residence of certain shareholders.* A foreign corporation seeking qualified foreign corporation status or an intermediary that is a direct or indirect shareholder of such foreign corporation may substantiate the residence of certain shareholders, for purposes of paragraph (b)(2)(i)(B) of this section, under one of the following special rules in paragraphs (d)(3)(ii) through (viii) of this section, in lieu of obtaining the ownership statements required in paragraph (d)(2)(i) of this section from such shareholders.

(ii) *Special rule for registered shareholders owning less than one percent of widely-held corporations.* A foreign corporation with at least 250 registered shareholders, that is not a publicly-traded corporation, as described in § 1.883–2 (a widely-held corporation), is not required to obtain an ownership statement from an individual shareholder owning less than one

percent of the widely-held corporation at all times during the taxable year if the requirements of paragraphs (d)(3)(ii)(A) and (B) are satisfied. If the widely-held foreign corporation is the foreign corporation seeking qualified foreign corporation status, or an intermediary that meets the documentation requirements of paragraphs (d)(4)(v)(A) and (B) of this section, the widely-held foreign corporation may treat the address of record in its ownership records as the residence of any less than one percent individual shareholder if—

(A) The individual's address of record is a specific street address and not a non-residential address, such as a post office box or in care of a financial intermediary or stock transfer agent; and

(B) The officers and directors of the widely-held corporation neither know nor have reason to know that the individual does not reside at that address.

(iii) *Special rule for beneficiaries of pension funds*—(A) *Government pension fund.* An individual who is a beneficiary of a government pension fund, as defined in paragraph (b)(5)(ii) of this section, may be treated as a resident of the country in which the pension fund is administered if the pension fund satisfies the documentation requirements of paragraphs (d)(4)(v)(A) and (C)(*1*) of this section.

(B) *Non-government pension fund.* An individual who is a beneficiary of a non-government pension fund, as described in paragraph (b)(5)(iii) of this section, may be treated as a resident of the country of the beneficiary's address as it appears on the records of the fund, provided it is not a nonresidential address, such as a post office box or an address in care of a financial intermediary, and provided none of the trustees, directors or other administrators of the pension fund know, or have reason to know, that the beneficiary is not an individual resident of such foreign country. The rules of this paragraph (d)(3)(iii)(B) shall apply only if the non-government pension fund satisfies the documentation requirements of paragraphs (d)(4)(v)(A) and (C)(*2*) of this section.

(iv) *Special rule for stock owned by publicly-traded corporations.* Any stock in a foreign corporation seeking qualified foreign corporation status that is owned by a publicly-traded corporation will be treated as owned by an individual resident in the country where the publicly-traded corporation is organized if the foreign corporation receives the statement described in paragraph (d)(4)(iii) of this section from the publicly-traded corporation and copies of any relevant ownership statements from shareholders of the publicly-traded corporation relied on to satisfy the exception to the closely-held test of § 1.883–2(d)(3)(ii), as required in paragraph (d)(2)(i) of this section.

(v) *Special rule for not-for-profit organizations.* For purposes of meeting the ownership requirements of paragraph (a) of this section, a not-for-profit organization may rely on the addresses of record of its individual beneficiaries and supporters to determine the residence of an individual beneficiary or supporter, within the meaning of paragraph (b)(2)(i)(B) of this section, to the extent required under paragraph (b)(4) of this section, provided that—

(A) The addresses of record are not nonresidential addresses such as a post office box or in care of a financial intermediary;

(B) The officers, directors or administrators of the organization do not know or have reason to know that the individual beneficiaries or supporters do not reside at that address; and

(C) The foreign corporation seeking qualified foreign corporation status receives the statement required in paragraph (d)(4)(iv) of this section from the not-for-profit organization.

(vi) *Special rule for a foreign airline covered by an air services agreement.* A foreign airline that is covered by a bilateral Air Services Agreement in force between the United States and the qualified foreign country in which the airline is organized may rely exclusively on the Air Services Agreement currently in effect and will not have to otherwise substantiate its ownership under this section, provided that the United States has not waived the ownership requirements in the agreement or that the ownership requirements have not otherwise been made ineffective. Such an airline will be treated as owned by qualified shareholders resident in the country where the foreign airline is organized.

(vii) *Special rule for taxable non-stock corporations.* Any stock in a foreign corporation seeking qualified foreign corporation status that is owned by a taxable non-stock corporation will be treated as owned, in any taxable year, by the recipients of distributions made during that taxable year, as set out in paragraph (c)(5) of this section. The taxable non-stock corporation may treat the address of record in its distribution records as the residence of any recipient if—

(A) An individual recipient's address is in a qualified foreign country and is a specific street address and not a non-residential address, such as a post office box or in care of a financial intermediary or stock transfer agent;

(B) The address of a non-individual recipient's principal place of business is in a qualified foreign country;

(C) The officers and directors of the taxable non-stock corporation neither know nor have reason to know that the recipients do not reside or have their principal place of business at such addresses; and

(D) The foreign corporation receives the statement described in paragraph (d)(4)(v)(D) of this section from the taxable non-stock corporation intermediary.

(viii) *Special rule for closely-held corporations traded in the United States.* To demonstrate that a class of stock is not closely-held for purposes of § 1.883–2(d)(3)(i), a foreign corporation whose stock is traded on an established securities market in the United States may rely on its most current SEC Form 13G filing (Statement of Beneficial Ownership by Certain Persons) for the taxable year to identify its 5-percent shareholders in each class of stock relied upon to meet the regularly traded test, without having to make any independent investigation to determine the identity of the 5-percent shareholder. However, if any class of stock is determined to be closely-held within the meaning of § 1.883–2(d)(3)(i), the publicly traded corporation cannot satisfy the requirements of § 1.883–2(e) unless it obtains sufficient documentation described in this paragraph (d) to demonstrate that the requirements of § 1.883–2(d)(3)(ii) are met with respect to the 5-percent shareholders.

(4) *Ownership statements from shareholders*—(i) *Ownership statements from individuals.* An ownership statement from an individual is a written statement signed by the individual under penalties of perjury stating—

(A) The individual's name, permanent address, and country where the individual is fully liable to tax as a resident, if any;

(B) If the individual was not a resident of the country for the entire taxable year of the foreign corporation seeking qualified foreign corporation status, each of the foreign countries in which the individual resided and the dates of such residence during the taxable year of such foreign corporation;

(C) If the individual directly owns stock in the corporation seeking qualified foreign corporation status, the name of the corporation, the number of shares in each class of stock of the corporation that are so owned, and the

period of time during the taxable year of the foreign corporation during which the individual owned the stock;

(D) If the individual directly owns an interest in a corporation, partnership, trust, estate or other intermediary that directly or indirectly owns stock in the corporation seeking qualified foreign corporation status, the name of the intermediary, the number and class of shares or amount and nature of the interest of the individual in such intermediary, and the period of time during the taxable year of the corporation seeking qualified foreign corporation status during which the individual held such interest;

(E) To the extent known by the individual, a description of the chain of ownership through which the individual owns stock in the corporation seeking qualified foreign corporation status, including the name and address of each intermediary standing between the intermediary described in paragraph (d)(4)(i)(D) of this section and the foreign corporation and whether this interest is owned either directly or indirectly through bearer shares; and

(F) Any other information as specified in guidance published by the Internal Revenue Service (*see* § 601.601(d)(2) of this chapter).

(ii) *Ownership statements from foreign governments.* An ownership statement from a foreign government that is a qualified shareholder is a written statement—

(A) Signed by any one of the following—

(*1*) An official of the governmental authority, agency or office who has supervisory authority with respect to the government's ownership interest and who is authorized to sign such a statement on behalf of the authority, agency or office; or

(*2*) The competent authority of the foreign country (as defined in the income tax convention between the United States and the foreign country); or

(*3*) An income tax return preparer that, for purposes of this paragraph (d)(4)(ii) only, shall mean a firm of licensed or certified public accountants, a law firm whose principals or members are admitted to practice in one or more states, territories or possessions of the United States or the country of such government, or a bank or other financial institution licensed to do business in such foreign country and having assets at least equivalent to 50 million U.S. dollars and who is authorized to represent the government or governmental authority; and

(B) That provides—

(*1*) The title of the official or other person signing the statement;

(*2*) The name and address of the government authority, agency or office that has supervisory authority and, if applicable, the income tax preparer which has prepared such ownership statement;

(*3*) The information described in paragraphs (d)(4)(i)(C) through (F) of this section (as if the language applied ''government'' instead of ''individual'') with respect to the government's direct or indirect ownership of stock in the corporation seeking qualified resident status;

(*4*) In the case of an ownership statement prepared by an income tax return preparer, a statement under penalties of perjury identifying the documentation relied upon in the conduct of due diligence for the taxable year to determine the aggregate government investment in the stock of the shipping or aircraft company in preparation of such ownership statement attached to a valid power of attorney to represent the taxpayer for the taxable year; and

(*5*) Any other information as specified in guidance published by the Internal Revenue Service (*see* § 601.601(d)(2) of this chapter).

(iii) *Ownership statements from publicly-traded corporate shareholders.* An ownership statement from a publicly-traded corporation that is a direct or indirect owner of the corporation seeking qualified foreign corporation status is a written statement, signed under penalties of perjury by a person that would be authorized to sign a tax return on behalf of the shareholder corporation containing the following information—

(A) The name of the country in which the stock is primarily traded;

(B) The name of the established securities market or markets on which that the stock is listed;

(C) A description of each class of stock relied upon to meet the requirements of § 1.883–2(d)(1), including the number of shares issued and outstanding as of the close of the taxable year;

(D) For each class of stock relied upon to meet the requirements of § 1.883–2(d)(1), if one or more 5-percent shareholders, as defined in § 1.883–2(d)(3)(i), own in the aggregate 50 percent or more of the value of the outstanding shares of that class of stock at any time during the taxable year, state—

(*1*) The highest total percentage of the value of the class of stock that is owned by such 5-percent shareholders;

(*2*) For each qualified shareholder who owns or is treated as owning stock in the closely-held block upon whom the corporation intends to rely to satisfy the exception to the closely-held test of § 1.883–2(d)(3)(ii)—

(*i*) The name of each such shareholder;

(*ii*) The percentage of the total value of the class of stock held by each such shareholder;

(*iii*) The address of record of each such shareholder;

(*iv*) The country of residence of each such shareholder, determined under paragraph (b)(2) or (d)(3) of this section; and

(E) The portion of the taxable year of the corporation during which the stock was closely-held without regard to the exception in § 1.883–2(d)(3)(ii);

(F) The information described in paragraphs (d)(4)(i)(C) through (F) of this section (as if the language applied ''publicly-traded corporation'' instead of ''individual'') with respect to the publicly-traded corporation's direct or indirect ownership of stock in the corporation seeking qualified resident status; and

(G) Any other information as specified in guidance published by the Internal Revenue Service (*see* § 601.601(d)(2) of this chapter).

(iv) *Ownership statements from not-for-profit organizations.* An ownership statement from a not-for-profit organization (other than a pension fund as defined in paragraph (b)(5) of this section) is a written statement signed by a person authorized to sign a tax return on behalf of the organization under penalties of perjury stating—

(A) The name, permanent address, and principal location of the activities of the organization (if different from its permanent address);

(B) The information described in paragraphs (d)(4)(i)(C) through (F) of this section (as if it the language applied ''not-for-profit organization'' instead of ''individual'');

(C) A representation that the not-for-profit organization satisfies the requirements of paragraph (b)(4) of this section; and

(D) Any other information as specified in guidance published by the Internal Revenue Service (*see* § 601.601(d)(2) of this chapter).

(v) *Ownership statements from intermediaries*—(A) *General rule.* The foreign corporation seeking qualified foreign corporation status under the shareholder stock ownership test must obtain an intermediary ownership statement from each intermediary standing in the chain of ownership between it and the qualified

shareholders on whom it relies to meet this test. An intermediary ownership statement is a written statement signed under penalties of perjury by the intermediary (if the intermediary is an individual) or a person who would be authorized to sign a tax return on behalf of the intermediary (if the intermediary is not an individual) containing the following information—

(*1*) The name, address, country of residence, and principal place of business (in the case of a corporation or partnership) of the intermediary, and, if the intermediary is a trust or estate, the name and permanent address of all trustees or executors (or equivalent under foreign law), or if the intermediary is a pension fund, the name and permanent address of place of administration of the intermediary;

(*2*) The information described in paragraphs (d)(4)(i)(C) through (F) of this section (as if the language applied ''intermediary'' instead of ''individual'');

(*3*) If the intermediary is a nominee for a shareholder or another intermediary, the name and permanent address of the shareholder, or the name and principal place of business of such other intermediary;

(*4*) If the intermediary is not a nominee for a shareholder or another intermediary, the name and country of residence (within the meaning of paragraph (b)(2) of this section) and the proportionate interest in the intermediary of each direct shareholder, partner, beneficiary, grantor, or other interest holder (or if the direct holder is a nominee, of its beneficial shareholder, partner, beneficiary, grantor, or other interest holder), on which the foreign corporation seeking qualified foreign corporation status intends to rely to satisfy the requirements of paragraph (a) of this section. In addition, such intermediary must obtain from all such persons an ownership statement that includes the period of time during the taxable year for which the interest in the intermediary was owned by the shareholder, partner, beneficiary, grantor or other interest holder. For purposes of this paragraph (d)(4)(v)(A), the proportionate interest of a person in an intermediary is the percentage interest (by value) held by such person, determined using the principles for attributing ownership in paragraph (c) of this section;

(*5*) If the intermediary is a widely-held corporation with registered shareholders owning less than one percent of the stock of such widely-held corporation, the statement set out in paragraph (d)(4)(v)(B) of this section, relating to ownership statements from widely-held intermediaries with registered shareholders owning less than one percent of such widely-held intermediaries;

(*6*) If the intermediary is a pension fund, within the meaning of paragraph (b)(5) of this section, the statement set out in paragraph (d)(4)(v)(C) of this section, relating to ownership statements from pension funds;

(*7*) If the intermediary is a taxable non-stock corporation, within the meaning of paragraph (c)(5) of this section, the statement set out in paragraph (d)(4)(v)(D) of this section, relating to ownership statements from intermediaries that are taxable non-stock corporations; and

(*8*) Any other information as specified in guidance published by the Internal Revenue Service (*see* § 601.601(d)(2) of this chapter).

(B) *Ownerships statements from widely-held intermediaries with registered shareholders owning less than one percent of such widely-held intermediary.* An ownership statement from an intermediary that is a corporation with at least 250 registered shareholders, but that is not a publicly-traded corporation within the meaning of § 1.883–2, and that relies on paragraph (d)(3)(ii) of this section, relating to the special rule for registered shareholders owning less than one percent of widely-held corporations, must provide the following information in addition to the information required in paragraph (d)(4)(v)(A) of this section—

(*1*) The aggregate proportionate interest by country of residence in the widely-held corporation of such registered shareholders or other interest holders whose address of record is a specific street address and not a non-residential address, such as a post office box or in care of a financial intermediary or stock transfer agent; and

(*2*) A representation that the officers and directors of the widely-held intermediary neither know nor have reason to know that the individual shareholder does not reside at his or her address of record in the corporate records; and

(*3*) Any other information as specified in guidance published by the Internal Revenue Service (*see* § 601.601(d)(2) of this chapter).

(C) *Ownership statements from pension funds—(1) Ownership statements from government pension funds.* A government pension fund (as defined in paragraph (b)(5)(ii) of this section) that relies on paragraph (d)(3)(iii) of this section (relating to the special rules for pension funds) generally must provide the documentation required in paragraph (d)(4)(v)(A) of this section, and, in addition, the government pension fund must also provide the following information—

(*i*) The name of the country in which the plan is administered;

(*ii*) A representation that the fund is established exclusively for the benefit of employees or former employees of a foreign government, or employees or former employees of a foreign government and non-governmental employees or former employees that perform or performed governmental or social services;

(*iii*) A representation that the funds that comprise the trust are managed by trustees who are employees of, or persons appointed by, the foreign government;

(*iv*) A representation that the trust forming part of the pension plan provides for retirement, disability, or death benefits in consideration for prior services rendered;

(*v*) A representation that the income of the trust satisfies the obligations of the foreign government to the participants under the plan, rather than inuring to the benefit of a private person; and

(*vi*) Any other information as specified in guidance published by the Internal Revenue Service (*see* § 601.601(d)(2) of this chapter).

(*2*) *Ownership statement from non-government pension funds.* The trustees, directors, or other administrators of the non-government pension fund, as defined in paragraph (b)(5)(iii) of this section, that rely on paragraph (d)(3)(iii) of this section, relating to the special rules for pension funds, generally must provide the pension fund's intermediary ownership statement described in paragraph (d)(4)(v)(A) of this section. In addition, the non-government pension fund must also provide the following information—

(*i*) The name of the country in which the pension fund is administered;

(*ii*) A representation that the pension fund is subject to supervision or regulation by a governmental authority (or other authority delegated to perform such supervision or regulation by a governmental authority) in such country, and, if so, the name of the governmental authority (or other authority delegated to perform such supervision or regulation);

(*iii*) A representation that the pension fund is generally exempt from income taxation in its country of administration;

(*iv*) The number of beneficiaries in the pension plan;

(*v*) The aggregate percentage interest of beneficiaries by country of residence based on addresses shown on the books

and records of the fund, provided the addresses are not nonresidential addresses, such as a post office box or an address in care of a financial intermediary, and provided none of the trustees, directors or other administrators of the pension fund know, or have reason to know, that the beneficiary is not a resident of such foreign country;

(*vi*) A representation that the pension fund meets the requirements of paragraph (b)(5)(iii) of this section;

(*vii*) A representation that the trustees, directors or other administrators of the pension fund have no knowledge, and no reason to know, that a pro-rata allocation of interests of the fund to all beneficiaries would differ significantly from an actuarial allocation of interests in the fund (or, if the beneficiaries' actuarial interest in the stock held directly or indirectly by the pension fund differs from the beneficiaries' actuarial interest in the pension fund, the actuarial interests computed by reference to the beneficiaries' actuarial interest in the stock);

(*viii*) A representation that any overfunding of the pension fund would be payable, pursuant to the governing instrument or the laws of the foreign country in which the pension fund is administered, only to, or for the benefit of, one or more corporations that are organized in the country in which the pension fund is administered, individual beneficiaries of the pension fund or their designated beneficiaries, or social or charitable causes (the reduction of the obligation of the sponsoring company or companies to make future contributions to the pension fund by reason of overfunding shall not itself result in such overfunding being deemed to be payable to or for the benefit of such company or companies); or that the foreign country in which the pension fund is administered has laws that are designed to prevent overfunding of a pension fund and the funding of the pension fund is within the guidelines of such laws; or that the pension fund is maintained to provide benefits to employees in a particular industry, profession, or group of industries or professions, and that employees of at least 10 companies (other than companies that are owned or controlled, directly or indirectly, by the same interests) contribute to the pension fund or receive benefits from the pension fund; and

(*ix*) Any other information as specified in guidance published by the Internal Revenue Service (*see* § 601.601(d)(2) of this chapter).

(*3*) *Time for making determinations.* The determinations required to be made under this paragraph (d)(4)(v)(C) shall be made using information shown on the records of the pension fund for a date during the foreign corporation's taxable year to which the determination is relevant.

(*D*) *Ownership statements from taxable non-stock corporations.* An ownership statement from an intermediary that is a taxable non-stock corporation must provide the following information in addition to the information required in paragraph (d)(4)(v)(A) of this section—

(*1*) With respect to paragraph (d)(4)(v)(A)(*7*) of this section, for each beneficiary that is treated as a qualified shareholder, the name, address of residence (in the case of an individual beneficiary, the address must be a specific street address and not a non-residential address, such as a post office box or in care of a financial intermediary; in the case of a non-individual beneficiary, the address of the principal place of business) and percentage that is the same proportion as the amount that the beneficiary receives in the tax year bears to the total net income of the taxable non-stock corporation in the tax year;

(*2*) A representation that the officers and directors of the taxable non-stock corporation neither know nor have reason to know that the individual beneficiaries do not reside at the address listed in paragraph (d)(4)(v)(D)(*1*) of this section or that any other non-individual beneficiary does not conduct its primary activities at such address or in such country of residence; and

(*3*) Any other information as specified in guidance published by the Internal Revenue Service (see § 601.601(d)(2) of this chapter).

(5) *Availability and retention of documents for inspection.* The documentation described in paragraphs (d)(3) and (4) of this section must be retained by the corporation seeking qualified foreign corporation status (the foreign corporation) until the expiration of the statute of limitations for the taxable year of the foreign corporation to which the documentation relates. Such documentation must be made available for inspection by the Commissioner at such time and place as the Commissioner may request in writing.

(e) *Reporting requirements.* A foreign corporation relying on the qualified shareholder stock ownership test of this section to meet the stock ownership test of § 1.883–1(c)(2) must provide the following information in addition to the information required in § 1.883–1(c)(3) to be included in its Form 1120F, ''U.S. Income Tax Return of a Foreign Corporation'' for each taxable year. The information should be current as of the end of the corporation's taxable year. The information must include the following—

(1) A representation that more than 50 percent of the value of the outstanding shares of the corporation is owned (or treated as owned by reason of paragraph (c) of this section) by qualified shareholders for each category of income for which the exemption is claimed;

(2) With respect to each individual qualified shareholder owning 5 percent or more of the foreign corporation, applying the attribution rules of paragraph (c) of this section, and relied upon to meet the 50 percent ownership test of paragraph (a) of this section, the name and street address, as represented on each such individual's ownership statement;

(3) With respect to all qualified shareholders relied upon to satisfy the 50 percent ownership test of paragraph (a) of this section, the total percentage of the value of the outstanding shares owned, applying the attribution rules of paragraph (c) of this section, by all qualified shareholders resident in a qualified foreign country, by country; and

(4) Any other relevant information specified by the Form 1120F and its accompanying instructions.

§ 1.883–5 Effective dates.

(a) *General rule.* Sections 1.883–1 through 1.883–4 apply to taxable years of a foreign corporation seeking qualified foreign corporation status beginning 30 days or more after the date these regulations are published as final regulations in the **Federal Register**.

(b) *Election for retroactive application.* When these regulations are published as final regulations, taxpayers will be permitted to elect to apply §§ 1.883–1 through 1.883–4, as finalized, for any open taxable year of the foreign corporation beginning after December 31, 1986, except that the substantiation and reporting requirements of § 1.883–1(c)(3) (relating to the substantiation and reporting required to be treated as a qualified foreign corporation) or §§ 1.883–2(f), 1.883–3(d) and 1.883–4(e) (relating to additional information to be included in the return to demonstrate whether the foreign corporation satisfies the stock ownership test) will not apply to any year beginning before the applicable date of the final regulations. Such election shall apply to the taxable year of the election and to all subsequent

taxable years prior to the effective date of this regulation. Pending finalization of these regulations, if a foreign corporation complies with the proposed regulations, it will be considered substantial evidence that the foreign corporation is a qualified foreign corporation.

(c) *Transitional information reporting rule.* For taxable years of the foreign corporation beginning 30 days or more after the date these regulations are published as final regulations in the **Federal Register**, and until such time as the Form 1120F and its instructions are revised to conform to §§ 1.883–1 through 1.883–4, the information required in § 1.883–1(c)(3) and § 1.883–2(f), 1.883–3(d) or 1.883–4(e), as applicable, must be included on a written statement signed under penalties of perjury by a person authorized to sign the return, attached to the Form 1120F, and filed with the return.

Robert E. Wenzel,

Deputy Commissioner of Internal Revenue.

[FR Doc. 02–19127 Filed 7–31–02; 8:45 am]

BILLING CODE 4830–01–P

Federal Register

Friday,
August 2, 2002

Part III

Department of Defense

Department of the Army, Corps of Engineers

33 CFR Part 385

Programmatic Regulations for the Comprehensive Everglades Restoration Plan; Proposed Rule

DEPARTMENT OF DEFENSE

Department of the Army, Corps of Engineers

33 CFR Part 385

RIN 0710–AA49

Programmatic Regulations for the Comprehensive Everglades Restoration Plan

AGENCY: Army Corps of Engineers; DoD.

ACTION: Proposed rule.

SUMMARY: The Army Corps of Engineers proposes to establish programmatic regulations for the Comprehensive Everglades Restoration Plan. Congress approved the Comprehensive Everglades Restoration Plan in section 601 of the Water Resources Development Act of 2000, which was enacted into law on December 11, 2000. The Act requires the Secretary of the Army to promulgate programmatic regulations within two years to ensure that the goals and purposes of the Comprehensive Everglades Restoration Plan are achieved. We have developed these proposed regulations in response to that statutory requirement. The proposed regulations establish processes and procedures that will guide the Army Corps of Engineers and its partners in the implementation of the Comprehensive Everglades Restoration Plan.

DATES: We will accept comments until October 1, 2002.

ADDRESSES: If you wish to comment on the proposed regulations, you may submit your comments by any one of several methods:

1. You may submit written comments to U.S. Army Corps of Engineers, ATTN: CESAJ–DR–R, P.O. Box 4970, Jacksonville, FL 32232–0019.

2. You may send comments by electronic mail (e-mail) to: *proregs@usace.army.mil.* See the Public Comments Solicited section below for file formats and other information about electronic filing.

3. You may also submit comments through the Internet by completing a comment form on the programmatic regulations web page at: *http://www.evergladesplan.org/pm/progr_regs_comment_form.shtml/.*

FOR FURTHER INFORMATION CONTACT: Stu Appelbaum, Corps of Engineers, Jacksonville District, at the above address, phone (904) 232–1877; fax (904) 899–5001. You may also access the programmatic regulations web page at: *http://www.evergladesplan.org/pm/progr_regs.shtml/.*

SUPPLEMENTARY INFORMATION:

I. Background

Section 601(h)(3) of the Water Resources Development Act of 2000, Public Law 106–541 (114 Stat. 2688) (hereinafter ''WRDA 2000'') requires the Secretary of the Army, after notice and opportunity for public comment, to promulgate regulations to ensure that the goals and purposes of the Comprehensive Everglades Restoration Plan (the Plan) are achieved. These regulations implement this provision and establish the administrative structure for carrying out the Plan. They establish a process: for the development of Project Implementation Reports, Project Cooperation Agreements, and Operating Manuals that will ensure that the goals and the objectives of the Comprehensive Everglades Restoration Plan (CERP) are achieved; to ensure that new information resulting from changes or unforeseen circumstances, new scientific or technical information or information that is developed through the principles of adaptive management contained in the Plan, and future authorized changes to the Plan will be integrated into the implementation of the Plan; and to ensure the protection of the natural system consistent with the goals and purposes of the Plan, including the establishment of interim goals to provide a means by which the restoration success of the plan will be evaluated throughout the implementation process.

In general, the programmatic regulations envision that the goals and purposes of the Plan will be achieved through the development of project-specific and system-wide measures. Project specific measures include but are not limited to project implementation reports, project cooperation agreements, operating manuals, and design documentation reports. The more generally applicable system-wide measures include, but are not limited to, the development of guidance memoranda, system-wide performance measures, the Master Implementation Sequencing Plan, interim goals, and targets for evaluating progress towards achieving other water-related needs of the region, including water supply and flood protection. The interim goals and targets for other water-related needs are of special significance. They establish incremental targets to evaluate progress toward the expected level of performance of the Plan and are used to monitor overall progress toward meeting the goals and purposes of the Plan. Taken together, the project specific and system-wide measures form the foundation of the Plan and are critical to the successful restoration of the South Florida ecosystem.

The South Florida ecosystem is a nationally and internationally unique and important natural resource. It is also a resource in peril, having been severely impacted by human activities for over a hundred years. The Central and Southern Florida Project extends from south of Orlando to the Florida Keys and is composed of a regional network of canals, levees, water storage areas, and water control structures. First authorized by Congress in 1948, the project serves multiple purposes. The authorized purposes of the project include flood control, regional water supply for agricultural and urban areas, prevention of salt water intrusion, water supply to Everglades National Park, preservation of fish and wildlife, recreation, and navigation. While fulfilling these authorized purposes, the project has had unintended adverse effects on the unique natural environment that constitutes the Everglades and South Florida ecosystem. In 1996, the Army Corps of Engineers was directed to develop a comprehensive plan to restore and preserve south Florida's natural ecosystem, while enhancing water supplies and maintaining flood protection. The resulting plan, which was submitted to Congress on July 1, 1999, is called the Comprehensive Everglades Restoration Plan.

The overarching goal of the Plan is the restoration, preservation, and protection of the South Florida ecosystem while providing for other water-related needs of the region such as flood protection and water supply. The Plan contains 68 major components that involve creation of approximately 217,000 acres of reservoirs and wetland-based water treatment areas, wastewater reuse plants, seepage management, and removal of levees and canals in natural areas. These components vastly increase storage and water supply for the natural system, as well as for urban and agricultural needs, while maintaining existing Central and Southern Florida Project purposes. The Comprehensive Everglades Restoration Plan will restore more natural flows of water, including sheet flow; improve water quality; and establish more natural hydroperiods in the South Florida ecosystem. Improvements to native flora and fauna, including those that benefit threatened and endangered species, are expected to occur as a result of the restoration of hydrologic conditions.

In enacting section 601 of WRDA 2000, Congress approved the Comprehensive Everglades Restoration Plan as a framework for modifications to

the Central and Southern Florida Project. Section 601 of WRDA 2000 contains a variety of provisions associated with implementation of the Comprehensive Everglades Restoration Plan, including an authorization for the construction of four pilot projects and ten initial projects of the Comprehensive Everglades Restoration Plan.

Section 601(h) of WRDA 2000 states that ''the overarching objective of the Plan is the restoration, preservation, and protection of the South Florida ecosystem while providing for other water-related needs of the region, including water supply and flood protection.'' This subsection directs that the Plan be implemented to ensure the protection of water quality in, the reduction of the loss of fresh water from, and the improvement of the environment of the South Florida Ecosystem. Implementation of the Plan also seeks to achieve and maintain the benefits to the natural system and human environment described in the Plan.

Section 601(h)(2) of WRDA 2000 requires the President and Governor to enter into a binding agreement ensuring that the water generated by the Plan will be made available to the natural system. The President and Governor signed this agreement on January 9, 2002. The agreement specifies that the State will ensure by regulation, or other appropriate means, that water made available by each project of the Plan will not be permitted for a consumptive use or otherwise made unavailable by the State until such time as sufficient reservations of water for restoration of the natural system are made under State law in accordance with the Project Implementation Report for that project and consistent with the Plan. This agreement also specifies that the State will monitor and assess the continuing effectiveness of reservations as long as the project is authorized to achieve the goals and objectives of the Plan.

Section 601(h)(3) of WRDA 2000 requires that the Secretary of the Army, after notice and opportunity for public comment, and with the concurrence of the Governor of Florida and the Secretary of the Interior, and consultation with the Miccosukee Tribe of Indians of Florida, the Seminole Tribe of Florida, the Administrator of the Environmental Protection Agency, the Secretary of Commerce, and other Federal, State, and local agencies, issue programmatic regulations within two years of the date of enactment of WRDA 2000 to ensure that the goals and purposes of the Plan are achieved. The proposed regulations are a specific response to the requirements of this section.

Section 601(h)(4) of WRDA 2000 describes the project specific assurance requirements for Project Implementation Reports, Project Cooperation Agreements, and Operating Manuals. Finally, section 601(h)(5) contains a Savings Clause that provides protection for existing legal sources of water that will be eliminated or transferred due to project implementation and provides for maintenance of the level of service for flood protection that is in existence on the date of enactment and in accordance with applicable law.

II. Process for Developing the Proposed Regulations

The Army developed the proposed regulations through an open and inclusive process that involved numerous meetings, briefings, and discussions with other Federal, State, and local agencies; the Miccosukee Tribe of Indians of Florida and the Seminole Tribe of Florida; agricultural, environmental, urban utilities, recreational, and urban interest groups; and the public. Briefings on the programmatic regulations were provided to the Governing Board of the South Florida Water Management District and its Water Resources Advisory Commission and the South Florida Ecosystem Restoration Task Force and its Working Group. In addition, programmatic regulations web pages were developed and posted on the Comprehensive Everglades Restoration Plan web site (http://www.evergladesplan.org). The web site was used to disseminate information about the programmatic regulations and to provide a place for individuals and organizations to submit comments electronically during the development of the programmatic regulations. This was designed to identify the major concerns of the agencies and various groups, prior to publishing the proposed regulations and soliciting formal public comment.

The Army held an opening round of meetings with agencies, interest groups, and the public in May and June 2001. The purpose of these meetings was to discuss the process that would be used to develop the programmatic regulations and to solicit comments on the major issues and concerns that should be addressed in developing the regulations.

Following this initial round of meetings, we developed a draft outline of the programmatic regulations. We then held a second round of meetings in September and October 2001 with agencies, interest groups, and the public to solicit comments on the draft outline. We also consulted with the Miccosukee Tribe of Indians of Florida and the Seminole Tribe of Florida, and sought their comments on the outline.

After the second round of meetings, we developed an initial draft of the programmatic regulations. We distributed this initial draft to the public on December 28, 2001, and allowed for informal public comment until February 15, 2002. We then held meetings with agencies, tribes, and interest groups, to discuss the initial draft. We also received written comments on the initial draft that we posted on the programmatic regulations web site. In addition, the Water Resources Advisory Commission formed a subcommittee on the programmatic regulations. The subcommittee met several times to discuss issues concerning the initial draft and potential solutions to these issues. The South Florida Ecosystem Restoration Task Force also met several times after the release of the initial draft to discuss the programmatic regulations.

Finally, we developed the proposed regulations after considering all of the information received at the meetings, as well as written comments that were received from agencies, interest groups, and the public.

III. Major Issues Addressed in Developing the Programmatic Regulations

A. General

As discussed, we held numerous meetings with agencies, tribes, interest groups, and the public. The initial draft regulations released in December 2001 prompted a number of written comments by agencies, tribes, interest groups, and the public. The major issues identified in those comments and how we considered the comments in developing the proposed rule are described in the following sections.

B. References to Senate Committee Report Language

A number of comments concerned referring to the Senate Environment and Public Works Committee Report (Senate Report No. 106–362) in the preamble to the proposed regulations. Some commenters believed that the Senate Report sets forth guidance for implementing the Plan and fulfilling the assurances provisions of section 601(h) of WRDA 2000. Others expressed the opinion that Senate Committee Report 106–362 carries no legislative weight since the bill discussed in Senate Committee Report 106–362 differs in several critical areas from the final version of the bill adopted by the full United States Senate. We have referred

to the Senate Report in the proposed regulations, like any other part of the history of the Plan, where we believe it may be helpful to understanding the statute or the issues involved in interpreting or implementing the statute.

C. Defining Restoration

Many comments concerned the value of defining restoration in the regulation. Some commenters expressed the view that a definition is needed in order to better define what is meant by the phrase ''restoration, preservation, and protection of the South Florida ecosystem'' used in section 601 of WRDA 2000.

Some commenters maintained that the Plan is only a framework and that Congress expected the implementing agencies to propose improvements to the Plan's goal of restoration through a regular process of adaptive management. These commenters believed that a comprehensive definition of restoration, including environmental and ecological recovery of the natural system, is needed to guide the process.

While recognizing the theoretical merits of these views, other commenters felt that this concept of restoration was too open-ended. These commenters believed that Congress adopted a specific framework for restoration in enacting WRDA 2000 and that framework was set forth in the Comprehensive Everglades Restoration Plan. They maintained that the restoration authorized by this Plan, while extensive, does not envision restoring the Everglades to its natural condition before the intervention of humans.

For the purposes of this regulation, we have adopted a middle ground between these two perspectives. We have defined the term ''restoration'' to mean the level of recovery and protection described in the plan that was approved by Congress in enacting WRDA 2000 as a framework for hydrologic restoration, and any future Congressional amendments to that framework. However, we have also highlighted in the definition that the Plan is designed to deliver water to and improve water quality in the natural system so that it once again exhibits and sustains essential physical and ecological characteristics that defined the pre-drainage South Florida ecosystem, including more natural hydropatterns, and that these hydrological modifications are a precursor to improvements to native flora and fauna, restoration of key habitats, and promotion of a pattern of plant communities that form a gradient from aquatic communities to uplands. Our proposed definition also envisions using the principles of adaptive management to seek continuous improvement of the Plan based upon new information resulting from changed or unforeseen circumstances, new scientific or technical information, or information developed through the adaptive assessment principles contained in the Plan, or future authorized changes to the Plan that are integrated into the implementation of the Plan.

In adopting this definition, we recognize that the Plan envisions the recovery and maintenance of certain important ecological components and patterns that are thought to have characterized the natural system. Achievement of these attributes is expected to result in the overall improvement of the environment of the South Florida ecosystem, including improvements to native flora and fauna, including threatened and endangered species; restoring the presence of key species in historic habitats; promoting a pattern of plant communities that form a gradient from aquatic communities to uplands; and providing habitat within the Everglades natural system to the species that inhabit the Everglades. These improvements are accomplished generally by increasing water storage and water supply for the Everglades natural system; restoring more natural flows of water, including sheet flow; establishing more natural hydroperiods, including wet and dry season cycles, natural recession rates, surface water depth patterns, and, in coastal areas, salinity and mixing patterns; and protecting water quality for the Everglades natural system as described in the Plan.

It is important to understand that the ''restored'' Everglades of the future will be different from any version of the Everglades that has existed in the past. While it will be significantly healthier than the current system, it will not completely match the pre-drainage system. The irreversible physical changes made to the ecosystem make a complete match impossible. The restored Everglades will be smaller and somewhat differently arranged than the historic ecosystem. However, it will have recovered those essential hydrological and biological characteristics that defined the original Everglades and made it unique among the world's wetlands systems. It will evoke the wildness and richness of the former Everglades.

D. Partnership With the State of Florida and With Others

Implementation of the Comprehensive Everglades Restoration Plan will require an effective partnership between the Federal and State governments. The State of Florida has established a trust fund, the Save Our Everglades Trust Fund, to pay for a significant portion of the non-Federal sponsor's share of implementation of the Plan and the South Florida Water Management District will serve as the non-Federal sponsor for implementing many of the projects of the Plan. Section 601 of WRDA 2000 recognizes the importance of this constructive relationship and further encourages this partnership.

The proposed regulations promote the implementation of the Comprehensive Everglades Restoration Plan by defining the processes and procedures needed to accomplish the necessary planning, design, construction, and operation of the projects authorized pursuant to the Plan. In addition, the proposed regulations establish a process of adaptive management where completed projects are monitored and assessed and changes to the Plan, its operations, or the schedule and sequence of projects are considered as appropriate to ensure that the goals and purposes of the Plan are achieved. The processes and requirements included in the proposed regulations also were developed to take into account the interests of the South Florida Water Management District, the State of Florida, or other non-Federal sponsors as the Plan is implemented. The proposed regulations also recognize that the non-Federal sponsor for some projects of the Plan will be governmental entities other than the South Florida Water Management District.

E. Consultation

The implementation of the Comprehensive Everglades Restoration Plan is the responsibility of the Corps of Engineers and the non-Federal sponsor; however, successful implementation of the Comprehensive Everglades Restoration Plan requires not just the involvement of the implementing agencies, but also extensive involvement by other Federal, State, local agencies, and the Tribes. The proposed regulations envision that the implementing agencies will consult with the Department of the Interior, the Environmental Protection Agency, the Department of Commerce, the Miccosukee Tribe of Indians of Florida, the Seminole Tribe of Florida, the Florida Department of Environmental Protection, and other Federal, State, and

local agencies as part of the planning and implementation process. The consultation provisions ensure that these interested parties are appropriately involved with the Corps of Engineers and the non-Federal sponsor in implementing, evaluating, and adapting the Plan.

The consultation provisions contemplate a timely exchange of views between parties. In other words, consultation is not to be used as a de facto veto power. Similar to the considerations for setting time limits for consulting under NEPA (40 CFR 1501.8), the regulations envision that the Corps of Engineers and the South Florida Water Management District may set reasonable limits on the amount of time for consultation, giving due consideration to the size of the proposed action, the degree to which relevant information is known or obtainable, the degree to which the action is controversial, the state of the art of analytical techniques, the number of persons affected, the consequences of delay, and other time limits imposed on the agency by law, regulations, or executive order.

F. Amount of Detail in the Proposed Regulations

Many comments addressed the degree of detail in the regulations. Some believed that the programmatic regulations should be very detailed, specific, and prescriptive. Others believed that the programmatic regulations should be more general. Some commenters also expressed concern that the Federal regulations not infringe on the sovereignty of the State of Florida or its right to allocate its water resources. Others sought to ensure that the regulations safeguard the Federal interest and investment in restoration, preservation, and protection of the South Florida ecosystem, including Federal properties such as national parks and wildlife refuges.

The proposed regulations attempt to address these concerns and provide guidance in implementing the Plan. We recognize that more detailed guidance memoranda will be needed to assist the implementation of the Plan. We have determined that the guidance memoranda should not be included in the programmatic regulations because they will be very technical, and are intended to provide internal guidance to the implementing agencies, and also because they still are in development. This decision is consistent with the view of some who felt that including the guidance memoranda in the regulations was incompatible with rule-making procedures because of the changing nature of the adaptive management process. These commenters were concerned that if guidance memoranda were included in these regulations, every revision to them would require us to initiate a rulemaking process. We expect that revisions may occur frequently for some of these procedures, particularly during the early stages of implementation of the Plan.

The programmatic regulations contemplate that the guidance memoranda be developed six months after the effective date of the final rule published in the **Federal Register** or December 31, 2003, whichever is sooner, with the concurrence of the Secretary of the Interior and the Governor. Even though we are not including the guidance memoranda in the regulations, we believe that the public should have an opportunity to review and comment on them in view of its interest in these matters. Accordingly, the programmatic regulations envision that we will provide a notice of availability of the guidance memoranda in the **Federal Register** and seek public comments before they are completed. After they are completed, the Corps of Engineers will consider during the next review and revision of the programmatic regulations, whether or not a particular guidance memorandum that has been completed, is appropriate for inclusion in the regulations.

G. Restoration Coordination and Verification (RECOVER)

Many comments focused on the role of RECOVER in implementing the Plan. Some of the commenters expressed concerns about how best to integrate individual projects into the Plan to ensure that the goals and purposes of the Plan are achieved. Others articulated concerns about the need to use the best scientific information available. Finally, some urged that RECOVER also focus on achieving the other water-related needs provided for in the Plan such as water supply and flood protection, along with restoration benefits.

RECOVER is an interdisciplinary, interagency scientific and technical team that is described in the Plan. The proposed regulations recognize that the Restoration Coordination and Verification (RECOVER) team already is in place and envision using RECOVER to ensure that a system-wide perspective is applied and that the best available scientific and technical information will be used during the implementation, evaluation, and adaptation of the Plan. The Corps of Engineers and the South Florida Water Management District will oversee the activities of RECOVER. The regulations also recognize the key role of the Department of the Interior in RECOVER because of its extensive experience in managing the Everglades National Park, and provide an important role for the Department in the Leadership Group of RECOVER, along with the Miccosukee Tribe of Indians of Florida, the Seminole Tribe of Indians, the U.S. Environmental Protection Agency, the Florida Department of Environmental Protection, and other Federal, State and local agencies as appropriate. While RECOVER is not a policy making body, the regulations outline a series of specific scientific and technical responsibilities for RECOVER that will assist the implementing agencies (the Corps of Engineers and the South Florida Water Management District) in achieving the goals and purposes of the Plan, particularly restoration of the natural system.

RECOVER will be responsible for, among other things, developing system-wide performance measures for consideration by the Corps of Engineers and South Florida Water Management District, in evaluating projects in achieving the system-wide goals and purposes of the Plan, preparing Project Implementation Reports, developing and recommending proposals for a system-wide monitoring plan, conducting assessment activities for the adaptive management program, considering proposed revisions to the Plan, and developing recommendations for interim goals. The proposed regulations memorialize many of the activities already underway by RECOVER. The proposed regulations make it clear that RECOVER is a scientific and technical team. Documents prepared by RECOVER are not self-executing and must be reviewed, discussed, revised, and/or approved by responsible management officials of the Corps of Engineers and the South Florida Water Management District, in consultation with the Miccosukee Tribe of Indians of Florida, the Seminole Tribe of Indians, the U.S. Department of the Interior, the U.S. Department of Commerce, U.S. Environmental Protection Agency, the Florida Department of Environmental Protection, and other Federal, State and local agencies as appropriate prior to implementation of management responses based on the results and findings contained therein.

H. Independent Scientific Review

Some commenters emphasized the need to maintain the system-wide focus of the Plan during implementation and felt that a mechanism must be developed to ensure that the best and

most current scientific information be used throughout implementation. Other commenters also expressed the view that an independent entity should be responsible for reviewing the science used to support the implementation of the Plan. The regulations recognize that, as required by Section 601(j) of WRDA 2000, an independent scientific review panel should be established. The proposed regulations do not establish this panel, but provide for its establishment. The regulations include provisions for cooperating with the panel, considering the panel's advice, and responding to the panel's recommendations.

I. Project Implementation Reports

Section 601 of WRDA 2000 establishes a new type of reporting document called a Project Implementation Report to bridge the gap between the conceptual level of detail in the Comprehensive Everglades Restoration Plan and the detail needed for project design. Section 601(h)(4)(A) of WRDA 2000 specifies a number of items required to be in a Project Implementation Report, including identification of the appropriate quantity, timing, and distribution of water dedicated and managed for the natural system, and the identification of the amount of water to be reserved or allocated for the natural system.

Some comments focused on the need to create a clearly defined process for the development of Project Implementation Reports, and, in particular, the formulation and evaluation of individual projects of the Plan. The report of the Senate Committee on Environment and Public Works on the Water Resources Development Act of 2000 (Senate Report No. 106–362) defines Project Implementation Reports as follows:

> The project implementation report is a new type of reporting document, similar to a General Reevaluation Report in that it will contain additional project formulation and evaluation. The project implementation report also will contain General Design Memorandum level of detail, or higher, for engineering and design. Some of the tasks associated with the preparation of the project implementation report will include: surveys and mapping; geotechnical analyses; flood damage assessment; real estate analyses; and preparation of supplemental National Environmental Policy Act documents. The project implementation reports will bridge the gap between the programmatic-level design contained in the Plan and the detailed design necessary to proceed to construction. Furthermore, each project implementation report will be accompanied by a Project Management Plan, which will detail schedules, funding requirements, and resource needs for final design and construction of the project.

The proposed regulations provide guidance for the development of Project Implementation Reports. They describe the requirements of a Project Implementation Report, including providing information required by the State of Florida for the participation of the non-Federal sponsor in the implementation of various components of the Plan. These requirements are set forth in Florida Statutes sections 373.1501 and 373.470, which specify the information that must be available before State agencies can participate in implementation of CERP projects. The proposed regulations contemplate that the Project Implementation Report will contain performance evaluations of alternatives in achieving the system-wide goals and purposes of the Plan, interim goals, and targets for progress toward other water-related needs. The Project Implementation Report also will include evaluations designed to ensure, to the extent practicable and consistent with the system-wide goals and purposes of the Plan, that the project delivers benefits, including benefits to the natural system, that would justify the project, in the context of the then existing Central and Southern Florida Project as modified by any CERP components that have already been implemented. The regulations also envision the development of a guidance memorandum that describes the major tasks necessary to develop a Project Implementation Report and an outline for the content of the Project Implementation Report. Finally, the regulations provide for development of a guidance memorandum establishing procedures for the formulation and evaluation of projects.

J. Project Cooperation Agreements

The Project Cooperation Agreement is the legal agreement between the Department of the Army and the non-Federal sponsor that must be executed before a project can be constructed. Section 601(h) of WRDA 2000 requires that the Secretary not execute a Project Cooperation Agreement until the State has reserved or allocated water for the natural system under State law as described in the Project Implementation Report. Some commenters questioned how the reservation or allocation would be made in accordance with the Project Implementation Report and how the Project Cooperation Agreement would verify this allocation of reservation had, in fact, been made. These commenters recommended that a guidance memorandum be developed to outline how the verification would occur. Others commenters were concerned that the Federal government not infringe on the State's authority under state law to make and revise reservations as necessary.

We agree that a guidance memorandum should be developed that outlines how Project Implementation Reports will identify how the appropriate quantity, timing and distribution of water dedicated and managed for the natural system will be determined, and how they will identify the amount of water that is to be reserved or allocated for the natural system in accordance with the provisions of WRDA 2000. The proposed regulations state that the Project Cooperation Agreement must include a finding that the reservation or allocation has been made by the State as required by Section 601(h) of WRDA 2000. This will provide the assurances regarding the reservation and Project Implementation Report that Congress intended without infringing on the State's right to reserve or allocate water under State law. In addition, the regulations further specify that the Project Cooperation Agreement (PCA) include a provision that any change to the reservation or allocation of water for the natural system made under State law shall require an amendment to the PCA. Further, the Secretary shall verify, in consultation with the South Florida Water Management District, the Florida Department of Environmental Protection, the Environmental Protection Agency, the Department of Commerce, the Seminole Tribe of Florida, the Miccosukee Tribe of Indians of Florida, and other Federal, State, and local agencies that the revised reservation or allocation continues to provide for an appropriate quantity, timing and distribution of water dedicated and managed for the natural system after considering any changed circumstances or information since completion of the Project Implementation Report. Finally, the proposed regulations recognize that the Project Cooperation Agreement must include several provisions required by the savings clause of Section 601(h)(5) of WRDA 2000. Accordingly, the Project Cooperation Agreement includes a provision that prohibits the Corps of Engineers and the non-Federal sponsor from eliminating or transferring existing legal sources of water until a new source of comparable quantity and quality is available as that available on the date of enactment of WRDA 2000. Similarly, in satisfaction of the savings clause requirements, the regulations specify

that a Project Cooperation Agreement must include a provision that existing levels of service for flood protection: (1) On the date of enactment of WRDA 2000; and (2) in accordance with applicable law, not be reduced.

K. Operating Manuals

Operating Manuals provide guidance on how projects are to be operated to ensure that the goals and purposes of the Plan are achieved. To achieve the goals and purposes of the Plan, individual projects must be operated as part of a system. Some commenters sought to ensure that Operating Manuals prepared for individual projects take into account the system-wide purposes of the Plan. Accordingly, the proposed regulations envision the development of two kinds of Operating Manuals. In addition to Project Operating Manuals, a System Operating Manual will be developed to provide a system-wide plan for operating projects and other C&SF Project features to ensure that individual facilities are linked together in a system-wide framework.

The regulations view Project Operating Manuals as supplements to the System Operating Manual, presenting aspects of the project not common to the system. The proposed regulations contemplate that a Project Operating Manual will be developed for each project. A draft Project Operating Manual will be included as an appendix in the Project Implementation Report. This will connect the operation of the project to the expected benefits of the project recommended in the Project Implementation Report. The final Project Operating Manual is to be prepared as soon as possible after completion of the operational testing and monitoring phase of the project.

L. Sequencing and Scheduling of Projects

The Plan consists of 68 components that will be implemented as approximately 45 separate projects, including pilot projects. The ''Final Integrated Feasibility Report and Programmatic Environmental Impact Statement'' dated April 1, 1999, included a sequence and schedule for implementation of the Plan. In July 2001, the Corps of Engineers and the South Florida Water Management District updated the sequence and schedule to incorporate updated information and requirements from Congress and the Florida legislature. The sequence and schedule of projects was the subject of many comments. Some commenters sought to ensure that the sequencing and schedule of projects would produce restoration benefits early in the implementation process. Others were apprehensive of this early focus on restoration benefits and were concerned that other water-related needs of the region as provided for in the Plan would be postponed until late in the implementation process. The proposed regulations establish a process for developing a Master Implementation Sequencing Plan and specify that projects will be sequenced and scheduled to maximize the achievement of the goals and purposes of the Plan, including the achievement of the interim goals at the earliest possible time, to the extent practical given scientific, technical, funding, contracting, and other constraints. The Master Implementation Sequencing Plan will also provide for sequencing and scheduling of projects to ensure, to the extent practicable and consistent with the system-wide goals of the Plan, that each project delivers benefits, including benefits to the natural system, that would justify the project, in the context of the then existing Central and Southern Florida Project as modified by any CERP components that have already been implemented. The Master Implementation Sequencing Plan will base the sequence and schedule of projects on the best scientific, technical, funding, contracting, and other information available.

The proposed regulations also envision that the Master Implementation Sequencing Plan will be revised as necessary to integrate new information such as updated schedules from Project Management Plans, the results of pilot projects and other studies, updated funding information, revisions to the Plan, Congressional or other authorization and direction, or information from the adaptive management program, including achievement of the expected performance level of the Plan and the interim goals.

M. Adaptive Management Program

One of the key components of the Plan is adaptive management. Adaptive management provides the opportunity to improve the design and performance of the Plan based on new information. The report of the Senate Committee on Environment and Public Works on WRDA 2000 (Senate Report No. 106–362) describes the intent of the adaptive management program:

> The committee does not expect rigid adherence to the Plan as it was submitted to Congress. This result would be inconsistent with the adaptive management principles in the Plan. Restoration of the Everglades is the goal, not adherence to the modeling on which the April, 1999 Plan was based. Instead, the committee expects that the agencies responsible for project implementation report formulation and Plan implementation will seek continuous improvement of the Plan based upon new information, improved modeling, new technology and changed circumstances.

The regulations define adaptive management as the process of improving the understanding of the natural and human systems in the South Florida ecosystem, specifically as these understandings pertain to the goals and purposes of the Plan, and to ensure continuous improvement of the Plan reflective of new information resulting from changed or unforeseen circumstances, new scientific or technical information, or information developed through the adaptive assessment principles contained in the Plan, or future authorized changes to the Plan. The opportunity for performance improvement offered by the adaptive management program is crucial for dealing with the uncertainties of the ecological responses that will occur as the Plan is implemented. The proposed regulations establish an adaptive management program to guide implementation of the Plan and recognize the importance of assessment reports to this process.

The proposed regulations specify that the implementing agencies will use assessment reports to seek continuous improvement in the Plan. The proposed regulations provide that in considering how the Plan may be improved, the Corps of Engineers and non-Federal project sponsor specifically consider modifying the design or operational plan for a project of the Plan not yet implemented; modifying the sequence or schedule for implementation of the Plan; adding new components to the Plan or deleting components not yet implemented; removing or modifying a component of the Plan already in place; or a combination of any of these actions. RECOVER will be responsible for carrying out these assessment tasks and submitting them to the Corps and the South Florida Water Management District for review.

N. Revisions to the Plan

We anticipate that the Plan will need to be revised periodically as part of the adaptive management program to reflect new information and to improve performance. The proposed regulations provide that a Comprehensive Plan Modification Report be prepared whenever significant revisions to the Plan are necessary to ensure that the goals and purposes of the Plan are achieved. The Comprehensive Plan Modification Report will be prepared

using a process consistent with the processes used to develop a Project Implementation Report. The proposed regulations provide that the final approved Comprehensive Plan Modification Report will be transmitted to Congress.

O. Ensuring Achievement of Plan Benefits

The Plan will improve the quantity, quality, timing, and distribution of water to the South Florida ecosystem. Section 601(f) of WRDA 2000 specifies that the Secretary in coordination with the non-Federal sponsor prepare Project Implementation Reports prior to implementation of those projects. Section 601(h)(4)(A) of WRDA 2000 specifies a number of items required to be in a Project Implementation Report, including identification of the appropriate quantity, timing, and distribution of water dedicated and managed for the natural system, and the identification of the amount of water to be reserved or allocated for the natural system. The reservation or allocation of water for the natural system will be implemented under State law and must be made before the Army can execute a Project Cooperation Agreement for the project. ''State law'' includes reservations or allocations of water made by Florida's Water Management Districts under authority of State law.

A number of commenters expressed the view that the Plan required that water be reserved for the natural system on an 80%–20% basis. These commenters rely on the report of the Senate Committee on Environment and Public Works on WRDA 2000 (Senate Report No. 106–362) that states:

> The Plan contains a general outline of the quantities of water to be produced by each project. According to the Army Corps, 80 percent of the water generated by the Plan is needed for the natural system in order to attain restoration goals, and 20 percent of the water generated for use in the human environment. * * * Subject to future authorizations by Congress, the committee fully expects that the water necessary for restoration, currently estimated at 80 percent of the water generated by the Plan, will be reserved or allocated for the benefit of the natural system (Emphasis added).

Although those percentages were appropriate as an initial estimate for the purpose of evaluating the Plan, the regulations anticipate that each Project Implementation Report will evaluate and identify water to be reserved for the natural system and made available for other water-related needs of the region, and that the Plan itself will be continually evaluated through adaptive management. Accordingly, the water actually allocated to meet the needs of the natural system and the water allocated under the Savings Clause may be greater or less than the initial Plan estimate. Therefore, the regulations do not contemplate that water will be strictly allocated on an 80%–20% basis, either system-wide or on a project-by-project basis.

Many commenters questioned how water would be reserved or allocated for the natural system. These questions focused on how the statutorily-required identification of water reservations and allocations for the natural system in each Project Implementation Report, would be coordinated with the actual reservation or allocation process which is conducted under State law.

Developing the pre-CERP baseline is of central importance to ensuring attainment of the benefits of the Plan and to resolving this issue. This baseline represents the conditions in the region on the date of enactment of WRDA 2000 accounting for natural variations and including existing legal sources of water. The baseline will establish the amount of water that is presently delivered by the Central and Southern Florida Project. The proposed regulations provide that the pre-CERP baseline will be established by June 30, 2003. The proposed regulations also provide that each Project Implementation Report will consider the change of pre-CERP baseline water availability in identifying the quantity, timing, and distribution of water to be made available for the natural system by a project component; whether improvements in water quality are needed in order to ensure that water delivered to the natural system meets applicable water quality standards; whether additional quantity, timing, and distribution of water and/or improved water quality should be made available by subsequent projects; whether to recommend preparation of a Comprehensive Plan Modification Report; and whether to recommend that the State of Florida and its agencies re-examine the reservation or allocation of water needed under State law in order to meet the needs of the natural system and such uses identified under the savings clause.

The Comprehensive Everglades Restoration Plan was developed as an integrated set of components or projects that are intended to work together to successfully achieve the goals and purposes of the Plan. Although individual projects increase the amount of water available, the effect of an individual project extends far beyond the location of the project. Accordingly, it is important that the identification of water to be reserved for the natural system take into account the synergistic and regional effect of projects. The proposed regulations contemplate that a guidance memorandum will be developed to provide uniform guidance for quantifying water made available by projects and for identifying the water to be reserved for the natural system. The proposed regulations also provide direction for the development of the guidance memorandum.

Some agencies, interest groups, and the public were concerned about potential variations from the predicted availability of water once projects actually are implemented and operated. The proposed regulations provide that development of a Comprehensive Plan Modification Report be undertaken to determine the need for revisions to the Plan. The regulations also provide that in the interim during preparation of the Comprehensive Plan Modification Report, operation of the project should be consistent with the procedures identified in the Project Implementation Report and Project Operating Manual.

P. Savings Clause Provisions

Many commenters questioned the effects of implementation of the Plan on existing legal sources of water and on existing levels of flood protection. As discussed, Section 601(h)(5)(A) of WRDA 2000 contains a savings clause provision that is designed to ensure that existing sources of water and levels of flood protection are preserved. The report of the Senate Committee on Environment and Public Works on WRDA 2000 (Senate Report No. 106–362) describes the intent of this savings clause as follows:

> Elimination of existing sources of water supply is barred until new sources of comparable quantity and quality of water are available; existing authorized levels of flood protection are maintained; and the water compact among the Seminole Tribe of Florida, the State, and the South Florida Water Management District is specifically preserved. With respect to flood control, the committee intends that implementation of the Plan will not result in significant adverse impact to any person with an existing, legally recognized right to a level of protection against flooding. The committee does not intend that, consistent with benefits included in the Plan, this bill create any new rights to a level of protection against flooding that is not currently recognized under applicable Federal or State law.

Although the savings clause uses the term ''existing legal sources of water,'' it does not define the term. Nor could we find a definition elsewhere in Federal or State law. We have not defined the term in the proposed regulations, leaving the definition of an ''existing legal source''

of water to be determined on a case-by-case basis after consideration of all relevant facts. We may include a definition after considering submitted comments. Currently, the proposed regulations specify that the Project Implementation Report will include an analysis to determine if the project will cause an elimination or transfer of existing legal sources of water. If the project will cause an elimination or transfer of a source of water, then the Project Implementation report will include measures to ensure that such elimination or transfer will not take place until a new source of water of comparable quantity or quality is available to replace the water that would be lost as a result of implementation of the Plan. Existing legal sources of water may include water currently available for agriculture, water supply, tribal use, or elements of the natural system including the Everglades, as well as any other existing legal sources.

The proposed regulations require a Project Implementation Report to include an analysis of the level of service for flood protection that was in existence on the date of enactment of the statute; and is in accordance with applicable law. If this analysis shows that the level of service for flood protection would be reduced by implementation of a project, then the regulations state that the project or its implementation plan will be modified to mitigate or eliminate the adverse effect on flood protection.

Some commenters raised the question of how the Plan would address opportunities for increased levels of flood protection or the provision of flood protection in locations where there currently is no flood protection. The overarching objective of the Plan is the restoration, preservation, and protection of the South Florida ecosystem while providing for other water-related needs of the region, including water supply and flood protection. Accordingly, the proposed regulations allow for the evaluation of increased levels of flood protection or the provision of flood protection in areas where there is currently no flood protection, provided that such flood protection is consistent with the goals and purposes of the Plan and is in accordance with the provisions of section 601(f)(2)(B) of WRDA 2000 and other applicable laws.

Q. Interim Goals

Many comments focused on development of the interim goals. Section 601(h)(3)(c)(i)(III) of WRDA 2000 requires that interim goals be established to provide a means by which the restoration success of the Plan may be evaluated throughout the restoration process. Progress towards meeting the interim goals is to be reported to Congress as part of the periodic reports required by the Act. While there was widespread agreement among agencies, tribes, interest groups, and the public that interim goals should be established to ensure that the goals and purposes of the Plan are achieved, there were different views about whether these interim goals should be a part of the programmatic regulations. Some believed that the interim goals needed to be a part of the programmatic regulations to ensure that the goals would be met. They also believed that goals had to be incorporated into the regulations to enable the public to take part in the process of establishing the goals. Others were concerned that the statute specifically required the regulations to set up the *process* for establishing interim goals rather than the goals themselves. Additional commenters were concerned that placing the interim goals in the programmatic regulations would make goals difficult to adopt and amend, and that the adaptive management process authorized by section 601 of WRDA 2000 was incompatible with the Administrative Procedures Act rule-making process. Other commenters were concerned that incorporating the goals into the regulations would suggest that the goals were meant to set standards or schedules enforceable in court rather than planning targets, and assessment and reporting tools.

In addition, during development of the proposed regulations, it was apparent that there was not complete agreement on exactly what the interim goals should be. Staff of the implementing agencies required additional time to model the implementation schedule to evaluate expected performance at specific points in the implementation process. This modeling is an important first step in developing incremental stages (interim goals) for achieving that performance. Moreover, the South Florida Ecosystem Restoration Task Force and others indicated an interest in reviewing and discussing interim goals before they were adopted. Thus, even among those who thought that interim goals should be included in these regulations, it was clear that more time for modeling was needed.

The proposed regulations recognize these facts and attempt to accommodate the views of commenters by establishing the principles that will guide the development of the interim goals and appropriately involve the public. The proposed regulations establish the structure for developing and adopting the interim goals, and make it clear that interim goals are targets for use of the agencies and Congress in evaluating the success of the restoration effort. They are not intended to be standards or schedules enforceable in court.

The Restoration Coordination and Verification (RECOVER) team will use the principles set forth in the proposed regulations to develop and recommend a set of interim goals for implementation of the Plan no later than June 30, 2003. The regulations specify that interim goals shall reflect the incremental accomplishment of the expected performance level of the Plan, and will identify improvements in quantity, timing and distribution of water in five-year increments beginning in 2005. The interim goals will also include indicators for water quality improvement and ecological responses, such as increases in extent of wetlands, improvements in habitat quality, and improvements in native plant and animal abundance. However, the regulations also recognize that achievement of improvements in water quality and desired ecological responses may be dependent on other programs and activities outside the scope of CERP. The extent of this dependence on outside programs and activities should be explicitly assessed and described at the time goals are developed, and should be taken into account as the CERP is subsequently evaluated relative to the goals. The interim goals shall be predicted by appropriate models and tools and shall provide a quantitative basis for evaluating the restoration success of the Plan during the period of implementation. The expected level of the Plan is generally represented by the output of the model run of D–13R as described in the ''Final Integrated Feasibility Report and Programmatic Environmental Impact Statement'' dated April 1, 1999, as modified by section 601 of WRDA 2000, or any subsequent modification authorized in law.

The proposed regulations envision that RECOVER will provide its recommendations to the Corps of Engineers and South Florida Water Management District for review and discussion. Interim goals will be memorialized in an agreement to be signed by the Department of the Army, the Department of the Interior, and the State no later than December 31, 2003. The Department of the Army, the Department of the Interior, and the State will provide a notice of availability of the proposed agreement to the public in the **Federal Register**, seek public

comments, and consult with Miccosukee Tribe of Indians of Florida, the Seminole Tribe of Florida, the Environmental Protection Agency, the Department of Commerce, the Florida Department of Environmental Protection, and other Federal, State, and local agencies and the South Florida Ecosystem Restoration Task Force concerning the proposed interim goals. Finally, the proposed regulations establish a process for revising the interim goals in five-year increments or sooner, if appropriate in light of new information.

Finally, some commenters believed that the interim goals should take into account other water-related needs of the region, including water supply and flood protection, as provided for in the Plan. Other commenters believed that the interim goals should not evaluate other water-related needs of the region. We felt that the interim goals should focus solely on restoration success because section 601(h)(3)(c)(i)(III) of WRDA 2000 specifies that the interim goals are to provide a means by which restoration success may be evaluated throughout the implementation process. The proposed regulations reflect this view. However, the statute recognizes that providing for other water-related needs of the region, including water supply and flood protection, are also objectives of the Plan. Therefore, the proposed regulations also provide for separately monitoring progress on other water-related needs of the region as provided for in the Plan during the implementation process, thus ensuring that all of the goals and purposes of the Plan will be achieved.

R. Relationship Among Restoration, Performance Measures, and Interim Goals

In order to comprehend how the Plan will be evaluated to ensure that its restoration objectives are achieved, it is essential to understand the relationship among the concepts of restoration, performance measures, and interim goals. In this regulation, restoration is defined as the level of recovery and protection to the South Florida ecosystem described in the Plan approved by Congress, with such modifications that Congress may provide for in the future. As the regulations indicate, the concept of restoration in the Plan approved by Congress was expressed in a level of recovery assessed in terms of performance measures, consisting chiefly of hydrologic characteristics. The definition also recognizes that increased flows to the natural system are expected to restore essential physical and ecological characteristics that defined the pre-drainage ecosystem, including more natural hydroperiods, which are a precursor to improvements to native flora and fauna, presence of key species in historic habitats, and patterns of plant communities that form a gradient from aquatic communities to uplands. The regulations recognize that the concept of restoration anticipates future improvements to the Plan through adaptive management. The regulations also recognize that performance measures will continue to be refined and developed throughout the course of implementing the Plan. Interim goals will show incremental progress towards reaching the expected performance level of the Plan at different time intervals during implementation. The regulations envision that the RECOVER team will provide their recommendations about interim goals to the Corps of Engineers and South Florida Water Management District. These recommendations will be considered during the development of an agreement on interim goals that is to be finalized by the Army, the Department of the Interior, and the State of Florida by December 31, 2003. These interim goals will be used initially to evaluate the success of the restoration effort and will be refined periodically during the implementation of the Plan as appropriate to ensure that the overall restoration objectives of the Plan are achieved.

S. Targets for Other Water-Related Needs of the Region

The overarching objective of the Plan is the restoration, preservation, and protection of the South Florida ecosystem while providing for other water-related needs of the region, including water supply and flood protection. Some commenters urged that, in addition to the interim goals aimed at evaluating restoration success of the Plan, the regulations also should provide incremental targets for the other water-related needs of the region. They believe that this will ensure that all of the goals and purposes of the Plan are achieved. Others commented that, if these other incremental targets were included, progress towards achieving these targets should be evaluated separately from interim goals.

Identifying incremental targets for the other water-related needs of the region will help evaluate the success of implementation of the Plan in achieving the non-restoration goals of the Plan. Therefore, we have decided to establish in the regulations a mechanism for evaluating progress towards providing for these other water-related needs. The regulations provide that by June 30, 2003, RECOVER will develop recommendations on targets to evaluate progress on achieving the other water-related needs of the region, for consideration by the Corps of Engineers and the South Florida Water Management District, in consultation with others. The Corps of Engineers and the South Florida Water Management District will also consult with the South Florida Ecosystem Restoration Task Force in establishing targets for evaluating progress towards achieving other water-related needs of the region provided for in the Plan. These targets shall be established by the Corps of Engineers and the South Florida Water Management District by December 31, 2003. These targets are intended to facilitate inter-agency planning, monitoring, and assessment throughout the implementation process and are not intended to be standards or schedules enforceable in court.

Interim goals, which are directed at restoration success of the Plan, and targets for achieving the other water-related needs of the region, which are not directed at restoration, are set out in two distinct sections to make clear that they are intended to evaluate two different types of goals of the Plan.

In recognition of the significant technical and scientific analyses that are needed in the development of interim goals and targets, RECOVER has already begun the work necessary in order to meet the June 30, 2003 deadline for providing recommendations on interim goals and targets for other water-related needs to the Corps of Engineers and the South Florida Water Management District.

T. Role of the Department of the Interior

Several commenters urged that the Department of the Interior play a significant role in implementation of the Plan because of its stewardship role over Federal lands and natural resources involved in the Plan. The regulations give the Department of the Interior a special concurring role, along with the Governor of the State of Florida, in the development of six specific guidance memoranda related to important program-wide aspects of implementing the Plan: (1) General format and content of Project Implementation Reports; (2) processes for Project Delivery Team evaluation of alternatives developed for Project Implementation Reports, their cost effectiveness and impacts; (3) process for system-wide evaluation of PIR alternatives by RECOVER; (4) the general content of operating manuals; (5) general processes for the conduct of assessment activities of RECOVER; and

(6) the process used in Project Implementation Reports for identifying the appropriate quantity, timing, and distribution of water dedicated and managed for the natural system. The regulations also give the Secretary of the Interior and the Governor of the State of Florida a concurring role in the Secretary of the Army's determination of the pre-CERP baseline. They also specify that interim goals will be established through a formal Interim Goals Agreement between the Corps of Engineers, the State, and the Department of the Interior. Further, the Department of the Interior is provided an important role in the Leadership Group of RECOVER, along with several other Federal and State agencies and the two Tribes. Finally, the regulations give the Department of the Interior an important consulting role throughout implementation of the program, including, among other things, participation on Project Development Teams; development of the Adaptive Management Program; selection and revision of hydrologic models; development of Project Management Plans and Program Management Plans; development of Project Implementation Reports; development of Operating Manuals; development, review and revision of changes to the Master Implementation Sequencing Schedule; recommending and developing Comprehensive Plan Modification Reports; and developing means for monitoring progress towards other water-related needs of the region as provided for in the Plan.

U. Role of South Florida Ecosystem Restoration Task Force

Several commenters suggested that the Programmatic Regulations create a specific role for the South Florida Ecosystem Restoration Task Force, an interagency group created by section 528(f) of the Water Resources Development Act of 1996 (110 Stat. 3770) (hereinafter ''WRDA 96''). The legal basis for the Task Force's role in the restoration effort is found both in Section 528 of WRDA 96 and in Section 601 of WRDA 2000. Section 528 envisions that the Task Force will coordinate programs and research on ecosystem restoration, exchange information, provide assistance and facilitate resolution of conflicts involving South Florida ecosystem restoration. In Section 601(j) of WRDA 2000, the Task Force is also given a consultation responsibility concerning the establishment of an independent scientific review panel to review the progress that is being made toward achieving the natural system restoration goals of the Plan. Some members of the Task Force and its associated working group represent agencies involved in implementing CERP under the programmatic regulations, such as the Jacksonville District Corps of Engineers and the South Florida Water Management District. As recognized by this regulation, the South Florida Water Management District and the Jacksonville District already regularly report to the Task Force and its working group on CERP matters. The Task Force also has appointed the Water Resources Advisory Commission (WRAC) of the South Florida Water Management District as an advisory body to the Task Force. The Corps of Engineers serves on this body and regularly briefs that body on CERP. The Department of the Army recognizes the important role that these collaborative groups play in discussion and resolution of CERP issues.

We expect that informal coordination among the implementing agencies, the Task Force and its working group and its other advisory bodies will continue. For example, the Task Force may wish to have regular briefings on CERP implementation issues, on the Master Implementation Sequencing Plan, on Project Implementation Reports, or on Operating Manuals; or the Task Force may decide to have RECOVER provide the working group with information on work in progress. Further, we contemplate that the Task Force will determine, on a case-by-case basis, the manner and extent to which it is appropriate for it to be involved in CERP in order to carry out its existing statutory responsibilities. If a regular process evolves, it can be incorporated into revisions of the Programmatic Regulations.

At recent meetings, the Task Force expressed an interest in consultation on several subjects. Accordingly, this draft regulation incorporates consultation with the Task Force on those subjects. They include: interim goals; targets for other water-related needs of the region as provided for in the Plan; certain assessment reports; Comprehensive Plan Modification Reports; Pilot Project Technical Data Reports; and periodic reports to Congress by the Secretary of Army and Secretary of Interior in consultation with EPA, Department of Commerce, and the State of Florida. The final regulation may provide for additional subjects upon which the Task Force may consult, if deemed appropriate after consideration of public comments.

V. NEPA Compliance

As required by regulations of the Council on Environmental Quality (40 CFR 1505.1 and 1507.3), agencies must issue regulations identifying classes of actions generally requiring an Environmental Impact Statement (EIS), generally not subject to the National Environmental Policy Act (NEPA), and actions requiring an Environmental Assessment (EA) of whether a full NEPA EIS is required or not. The Corps of Engineers has adopted procedures generally implementing NEPA in § 230 of this chapter. The Programmatic Regulations consider on a system-wide basis, the kinds of actions needed to implement the Plan, and apply the principles of § 230 to those activities. The programmatic regulations identify certain actions which generally require preparation of a NEPA document (either an Environmental Impact Statement or an environmental assessment), or which are categorically excluded from NEPA. Actions, such as the development or revision of methods or guidance memoranda, are listed as categorically excluded. Although the development or revision of a method or guidance memorandum itself would not require a NEPA analysis, use of the method or guidance memorandum would be analyzed under NEPA, as appropriate, in a decision document such as a Project Implementation Report.

In general, the NEPA documentation for a particular project will be included in the Project Implementation Report. For this reason, other project-specific documents such as the Design Documentation Report, Project Cooperation Agreement, Project Management Plan, and detailed plans and specifications for the project are listed as categorically excluded from NEPA documentation requirements. The Corps recognizes that these documents may address elements of the project that have a potential to significantly affect the quality of the human environment, and fully intends that these effects should be analyzed and considered as required by NEPA, but believes that this analysis and consideration can be most effectively accomplished by including one comprehensive NEPA analysis for each project in the Project Implementation Report, rather than having piecemeal analyses in each of the supporting documents.

Some commenters expressed the view that the guidance memorandum for determining the quantity, timing and distribution of water dedicated and managed for the natural system in a Project Implementation Report (PIR) should be analyzed in an Environmental Impact Statement (EIS). Since the guidance memorandum is procedural and does not affect the environment, recommend legislation, or determine a

specific quantity, timing, or distribution of water for a specific component, it was not considered to be a ''major Federal action'' under NEPA. It is important to note that NEPA would apply to the decision made in a PIR for a specific project applying a guidance memorandum to that project and determining that a certain quantity, timing or distribution of water was required for the project.

Similar comments were directed at the interim goals. Some commenters felt that the interim goals were not ''major Federal actions'' affecting the environment under NEPA. These commenters regarded the interim goals as evaluation and reporting tools. Other commenters maintained that the interim goals are planning goals and that as such should be subject to a full NEPA analysis. In proposing these regulations, we determined that it was not appropriate at this time to make a programmatic decision on precisely how NEPA applied to interim goals because the interim goals have not yet been established and since the extent to which interim goals will be used in planning is still under consideration. When specific interim goals are proposed for adoption, a decision can be made on exactly how NEPA applies. Moreover, when the Programmatic Regulations are revised for the first time, the Corps will consider whether interim goals should be listed as categorically excluded, generally requiring an EIS, or generally requiring an Environmental Assessment but not necessarily an EIS.

IV. Project Implementation Reports Approved Pursuant to Transition Rule

Section 601(h)(3)(D) of WRDA 2000 establishes a transition rule for Project Implementation Reports approved before the date of promulgation of the programmatic regulations. This transition rule requires that the Project Implementation Reports be consistent with the Plan. The transition rule also requires that the preamble of the programmatic regulations contain a statement concerning the consistency with the programmatic regulations of the Project Implementation Reports approved prior to the date of promulgation of those regulations.

A number of Project Implementation Reports are underway currently, but no Project Implementation Reports have been approved to date. The Project Implementation Report for the Southern Golden Gates Estates project in Collier County is scheduled to be completed prior to promulgation of the final rule. If the final Project Implementation Report on Southern Golden Gates Estates is approved before the date of promulgation of the final rule, then the preamble to the final rule will contain a statement concerning the consistency of that Project Implementation Report with the programmatic regulations.

V. Concurrence Requirements for This Regulation

The Secretary of the Interior and the Governor are required by Section 601(h)(3)(B) of WRDA 2000 to provide the Secretary with a written statement of concurrence or non-concurrence on the proposed programmatic regulations within 180 days from the end of the public comment period. This statute specifies that a failure to provide a written statement of concurrence or nonconcurrence within the 180-day time frame will be deemed as meeting the concurrency requirements. A copy of any concurrency or nonconcurrency statement shall be made a part of the administrative record and be referred to in the final programmatic regulations. Any nonconcurrency statements shall specifically detail the reason or reasons for the nonconcurrence. Throughout the process of developing the proposed regulations, we have maintained close coordination with the Department of the Interior and the State of Florida. The Army will give good faith consideration to the concurrence or non-concurrence statements of the Secretary of Interior and the Governor. The final regulations will include a reference to these statements before making a decision to issue final regulations.

VI. Organization of the Proposed Rule

We have organized the proposed regulations under five major headings. The first heading, General Provisions, provides the purpose of the regulations, the applicability of the rule, definitions pertaining to the regulations and other general information. The second heading, Program Goals and Responsibilities, describes the goals and purposes of the Plan; implementation principles; and implementation responsibilities, consultation, and coordination. The remaining headings were designed to be consistent with the content required by section 601(h)(3)(C). These headings are: Comprehensive Everglades Restoration Plan Implementation Processes; Incorporating New Information into the Plan; and Ensuring Protection of the Natural System and Water Availability Consistent with the Goals and Purposes of the Plan.

VII. Public Comments Solicited

We are soliciting comments and suggestions from the public, governmental organizations, and other interested parties on the proposed regulations.

If you wish to comment on this proposed rule, you may submit your comments and materials by any one of several methods (see **ADDRESSES** section). If submitting comments by electronic format, please submit them in ASCII file format or Word file format and avoid the use of special characters and any form of encryption. Please include your name and return e-mail address in your e-mail message. Please note that your e-mail address will not be retained at the termination of the public comment period.

VIII. Administrative Requirements

A. Paperwork Reduction Act of 1995 (44 U.S.C. 3501 et seq.)

These regulations do not impose any information collection requirements for which OMB approval under the Paperwork Reduction Act is required. Thus, this action is not subject to the Paperwork Reduction Act.

B. Executive Order 12866, as Amended

Under Executive Order 12866 (58 FR 51735, October 4, 1993), as amended, we must determine whether the regulatory action is ''significant'' and therefore subject to review by the Office of Management and Budget (OMB) and the requirements of the Executive Order. The Executive Order defines ''significant regulatory action'' as one that is likely to result in a rule that may:

(1) Have an annual effect on the economy of $100 million or more, or adversely affect in a material way the economy, a sector of the economy, productivity, competition, jobs, the environment, public health or safety, or State, local, or Tribal governments or communities;

(2) Create a serious inconsistency or otherwise interfere with an action taken or planned by another agency;

(3) Materially alter the budgetary impact of entitlements, grants, user fees, or loan programs or the rights and obligations of recipients thereof; or

(4) Raise novel legal or policy issues arising out of legal mandates, the President's priorities, or the principles set forth in the Executive Order.

Pursuant to the terms of Executive Order 12866, as amended, it has been determined that these regulations are a ''significant regulatory action'' in light of the provisions of paragraph (4) above. As such, this action was submitted to OMB for review. Changes made in response to OMB suggestions or recommendations are documented in the public record.

C. Executive Order 13132

Executive Order 13132, entitled ''Federalism'' (64 FR 43255, August 10, 1999), requires the development of an accountable process to ensure ''meaningful and timely input by State and local officials in the development of regulatory policies that have federalism implications.'' ''Policies that have federalism implications'' is defined in the Executive Order to include regulations that have ''substantial direct effects on the States, on the relationship between the national government and the States, or on the distribution of power and responsibilities among the various levels of government.'' These regulations do not have significant federalism implications. The proposed regulations define the relationships between the Federal and State partners in implementing the Comprehensive Everglades Restoration Plan. These proposed regulations are limited to implementation of the Comprehensive Everglades Restoration Plan. It will not have substantial direct effects on the States, on the relationship between the national government and the States, or on the distribution of power and responsibilities among the various levels of government, as specified in Executive Order 13132. Thus, Executive Order 13132 does not apply to this rule. Nonetheless, the Corps of Engineers has consulted closely with the State and local officials in developing the proposed rule.

D. Regulatory Flexibility Act

The Regulatory Flexibility Act (RFA) (5 U.S.C. 601 *et seq.*, as amended by the Small Business Regulatory Enforcement Fairness Act (SBREFA) of 1996) generally requires an agency to prepare a regulatory flexibility analysis of any rule subject to notice-and-comment rulemaking requirements under the Administrative Procedure Act or any other statute unless the agency certifies that the rule will not have a significant economic impact on a substantial number of small entities. Small entities include small businesses, small organizations and small governmental jurisdictions. For purposes of assessing the impacts of the proposed rule on small entities, a small entity is defined as: (1) A small business based on SBA size standards; (2) a small governmental jurisdiction that is a government of a city, county, town, school district, or special district with a population of less than 50,000; and (3) a small organization that is any not-for-profit enterprise which is independently owned and operated and is not dominant in its field. After considering the economic impacts of the proposed rule on small entities, we certify that this action will not have a significant economic impact on a substantial number of small entities. The proposed regulations only establish processes and governmental relationships that will be used for implementation of the Comprehensive Everglades Restoration Plan.

E. Unfunded Mandates Reform Act

We have determined in accordance with the Unfunded Mandates Reform Act (2 U.S.C. 1501 *et seq.*):

(a) These regulations will not ''significantly or uniquely'' affect small governments. A Small Government Agency Plan is not required. Small governments will only be affected to the extent that they agree to act as a non-Federal sponsor for implementation of projects for the Comprehensive Everglades Restoration Plan. The proposed regulations do not establish new or different requirements for non-Federal sponsors for implementation of projects for the Comprehensive Everglades Restoration Plan.

(b) The proposed regulations will not produce a Federal mandate of $100 million or greater in any year, and therefore, does not constitute a ''significant regulatory action'' under the Unfunded Mandates Reform Act. The regulations define processes and relationships between the Federal and State partners in implementing the Comprehensive Everglades Restoration Plan. The regulations do not affect the cost sharing requirements for non-Federal sponsors in implementing the Plan and therefore, imposes no new obligations on State or local governments.

F. National Technology Transfer and Advancement Act

Section 12(d) of the National Technology Transfer and Advancement Act of 1995 (the NTTAA), Public Law 104–113, section 12(d) (15 U.S.C. 272 note), directs us to use voluntary consensus standards in our regulatory activities unless to do so would be inconsistent with applicable law or otherwise impractical. Voluntary consensus standards are technical standards (e.g., materials specifications, test methods, sampling procedures, and business practices) that are developed or adopted by voluntary consensus standards bodies. The NTTAA directs us to provide Congress, through OMB, explanations when we decide not to use available and applicable voluntary consensus standards. These regulations do not involve technical standards. Therefore, we did not consider the use of any voluntary consensus standards.

G. Executive Order 13045

Executive Order 13045, entitled ''Protection of Children From Environmental Health Risks and Safety Risks'' (62 FR 19885, April 23, 1997), applies to any rule that: (1) Was initiated after April 21, 1997, or for which a notice of proposed rulemaking was published after April 21, 1998; (2) is determined to be ''economically significant'' as defined under Executive Order 12866, and (3) concerns an environmental health or safety risk that we have reason to believe may have a disproportionate effect on children. If the regulatory action meets all three criteria, we must evaluate the environmental health or safety effects of the planned rule on children, and explain why the planned regulation is preferable to other potentially effective and reasonably feasible alternatives that we considered. The regulations are not subject to Executive Order 13045 because it is not an economically significant regulatory action as defined by Executive Order 12866. The regulations establish processes for the implementation of the Comprehensive Everglades Restoration Plan and define the relationships between the Federal and State partners for implementation. Furthermore, they do not concern an environmental health or safety risk that we have reason to believe may have a disproportionate effect on children.

H. Executive Order 13175

Under Executive Order 13175, we may not issue a regulation that has substantial, direct effects on one or more Indian tribes, on the relationship between the Federal government and Indian tribes, or on the distribution of powers and responsibilities between the Federal government and Indian tribes, and imposes substantial direct compliance costs on those communities, and that is not required by statute, unless the Federal government provides the funds necessary to pay the direct compliance cost incurred by the Tribal governments, or we consult with those governments. If we comply by consulting, Executive Order 13175 requires us to provide the Office of Management and Budget, in a separately identified section of the preamble to the rule, a description of the extent of our prior consultation with representatives of affected Tribal governments, a summary of the nature of their concerns, and a statement supporting the need to issue the regulation. In addition, Executive Order 13175 requires us to develop an effective process permitting

elected officials and other representatives of Indian Tribal governments ''to provide meaningful and timely input in the development of regulatory policies on matters that significantly or uniquely affect their communities.'' The proposed regulations are required by section 601(h)(3) of WRDA 2000. Additionally, the proposed rule does not impose significant compliance costs on any Indian Tribes. The regulations establish processes for the implementation of the Comprehensive Everglades Restoration Plan and define the relationships between the implementing entities. Accordingly, the requirements of section 3(b) of Executive Order 13175 do not apply to these regulations. However, the Corps of Engineers recognizes that two Indian Tribes, the Miccosukee Tribe of Indians of Florida and the Seminole Tribe of Florida, have a significant direct interest in the implementation of the CERP and the framework for its implementation that will be established by these programmatic regulations. We have thus consulted extensively with these Tribes in the development of this proposed rule, and have included requirements for continued consultation in all significant project implementation components, including program-wide guidance memoranda, Project Management Plans, Program Management Plans, Project Implementation Reports, Project Operating Manuals, the System Operating Manual, and the Master Implementation Sequencing Plan. These Tribes are also included in the Leadership Group of RECOVER and participate in the Project Delivery Teams and the South Florida Ecosystem Restoration Task Force, which has played and will continue to play a consultative role on many aspects of CERP implementation. Finally, § 385.10(b) includes a general requirement for consultation with the Tribes ''throughout the implementation process.''

I. Executive Order 12630

In accordance with Executive Order 12630 entitled ''Governmental Actions and Interference with Constitutionally Protected Property Rights,'' the proposed regulations will not effect a taking of private property or otherwise have taking implications. A takings implication assessment is not required. The regulations establish processes to be used in implementing the Comprehensive Everglades Restoration Plan.

J. Civil Justice Reform

In accordance with Executive Order 12988, we have determined that the proposed regulations do not unduly burden the judicial system and meets the requirements of sections 3(a) and 3(b)(2) of the Order. The regulations establish processes to be used in implementing the Comprehensive Everglades Restoration Plan and defines the relationships between the governmental entities that will implement the Plan.

K. Executive Order 13211

On May 18, 2001, the President issued an Executive Order (E.O. 13211) that applies to regulations that significantly affect energy supply, distribution, and use. Executive Order 13211 requires agencies to prepare Statements of Energy Effects when undertaking certain actions. Because the proposed regulations are not expected to significantly affect energy supplies, distribution, or use, this action is not a significant energy action and no Statement of Energy Effects is required.

L. Environmental Documentation

We have determined that these proposed regulations do not constitute a major Federal action significantly affecting the quality of the human environment. Therefore, environmental documentation under the National Environmental Policy Act (NEPA) is not required for these proposed regulations. The Corps of Engineers has prepared appropriate environmental documentation, including a Programmatic Environmental Impact Statement, for the Comprehensive Everglades Restoration Plan. Moreover, the proposed regulations establish requirements for the preparation of appropriate environmental documentation as part of the implementation process.

List of Subjects in 33 CFR Part 385

Environmental protection, Flood control, Intergovernmental relations, Natural resources, Water resources, Water supply.

Dated: July 19, 2002.

R.L. Brownlee,

Under Secretary of the Army, Acting Assistant Secretary of the Army (Civil Works), Department of the Army.

For the reasons set forth in the preamble, the Army Corps of Engineers proposes to add 33 CFR part 385 as follows:

Add part 385 to read as follows:

PART 385—PROGRAMMATIC REGULATIONS FOR THE COMPREHENSIVE EVERGLADES RESTORATION PLAN

Subpart A—General Provisions

Sec.
385.1 Purpose of the programmatic regulations.
385.2 Applicability of the programmatic regulations.
385.3 Definitions.
385.4 Limitation on applicability of programmatic regulations.
385.5 CERP guidance memoranda.
385.6 Review of programmatic regulations.
385.7 Concurrency statements.

Subpart B—Program Goals and Responsibilities

385.8 Goals and purposes of the Comprehensive Everglades Restoration Plan.
385.9 Implementation principles.
385.10 Implementation responsibilities, consultation, and coordination.

Subpart C—CERP Implementation Processes

385.11 Implementation process for projects.
385.12 Pilot projects.
385.13 Projects implemented under additional program authority.
385.14 Incorporation of NEPA and related considerations into the implementation process.
385.15 Consistency with requirements of the State of Florida.
385.16 Design agreements.
385.17 Project Delivery Team.
385.18 Public outreach.
385.19 Environmental and economic equity.
385.20 Restoration Coordination and Verification (RECOVER).
385.21 Quality control.
385.22 Independent scientific review.
385.23 Dispute resolution.
385.24 Project Management Plans.
385.25 Program Management Plans.
385.26 Project Implementation Reports.
385.27 Project Cooperation Agreements.
385.28 Operating Manuals.
385.29 Other project documents.

Subpart D—Incorporating New Information Into the Plan

385.30 Master Implementation Sequencing Plan.
385.31 Adaptive Management Program.
385.32 Comprehensive Plan Modification Report.
385.33 Revisions to models and analytical tools.
385.34 Changes to the Plan.

Subpart E—Ensuring Protection of the Natural System and Water Availability Consistent With the Goals and Purposes of the Plan

385.35 Achievement of the benefits of the Plan.
385.36 Elimination or transfer of existing legal sources of water.
385.37 Flood protection.
385.38 Interim goals.

385.39 Evaluating progress on achieving other water-related needs of the region provided for in the Plan.
385.40 Reports to Congress.
Appendix A—Illustrations to Part 385

Authority: Section 601, Pub. L. 106–541, 114 Stat. 2680; 10 U.S.C. 3013(g)(3); 33 U.S.C. 1 and 701; and 5 U.S.C. 301.

Subpart A—General Provisions

§ 385.1 Purpose of the programmatic regulations.

(a) The regulations in this part implement the provisions of section 601(h)(3) of the Water Resources Development Act of 2000, Public Law 106–541, 114 Stat. 2688 (hereinafter ''WRDA 2000''), which was enacted on December 11, 2000.

(b) The purpose of these programmatic regulations is to establish the processes necessary for implementing the Comprehensive Everglades Restoration Plan (the Plan) to ensure that the goals and purposes of the Plan are achieved. Some of these processes are project specific, including, but not limited to, development of Project Implementation Reports, project-specific performance measures, Project Cooperation Agreements, plans and specifications, Design Documentation Reports, Pilot Project Technical Data Reports, and Operating Manuals. Other processes are of more general applicability, including, but not limited to, development of program-wide guidance memoranda, system-wide performance measures, interim goals, targets for monitoring progress on other goals and purposes of the Plan, and the Master Implementation Sequencing Plan. Taken together these documents establish the process by which the programmatic regulations ensure that the restoration success and other goals and purposes of the Plan are achieved. These programmatic regulations also describe the relationship among the various Federal, State, tribal, and local governmental entities charged with Plan implementation responsibilities.

§ 385.2 Applicability of the programmatic regulations.

(a) This part applies to all activities conducted to implement the Comprehensive Everglades Restoration Plan.

(b) Nothing in this part shall be interpreted to amend, alter, diminish, or otherwise affect:

(1) The powers and duties provided under the ''Comprehensive Everglades Restoration Plan Assurance of Project Benefits Agreement'' dated January 9, 2002 pursuant to section 601(h)(2) of WRDA 2000; or

(2) Any existing legal water rights of the United States, the State of Florida, the Miccosukee Tribe of Indians of Florida, or the Seminole Tribe of Florida, including rights under the compact among the Seminole Tribe of Florida, the State, and the South Florida Water Management District, defining the scope and use of water rights of the Seminole Tribe of Florida, as codified by section 7 of the Seminole Indian Land Claims Settlement Act of 1987 (25 U.S.C. 1772e).

(c) This part is intended to aid the internal management of the implementing agencies and are not intended to create any right or benefit enforceable at law by a party against the implementing agencies or their officers. Nothing in this part shall create a right or expectation to benefits or enhancements, temporary or permanent, in third parties that are not specifically authorized by Congress in Section 601 of WRDA 2000.

(d) Nothing in this part is intended to, or shall be interpreted to, reserve or allocate water or to prescribe the process for reserving or allocating water or for water management under Florida law. Nor is this part intended to, nor shall it be interpreted to, prescribe any process of Florida law.

§ 385.3 Definitions.

The following terms are defined for the purposes of this Part 385:

Adaptive management means the process of improving understandings of the natural and human systems in the South Florida ecosystem, specifically as these understandings pertain to the goals and purposes of the Plan, and to seek continuous improvement of the Plan based upon new information resulting from changed or unforeseen circumstances, new scientific or technical information, new or updated models, or information developed through the assessment principles contained in the Plan, or as future authorized changes to the Plan are integrated into the implementation of the Plan.

Assessment means the process whereby the actual performance of implemented projects is measured and interpreted based on analyses of information obtained from research, monitoring and modeling or other relevant sources.

Central and Southern Florida (C&SF) Project means the project for Central and Southern Florida authorized under the heading ''CENTRAL AND SOUTHERN FLORIDA'' in section 203 of the Flood Control Act of 1948 (62 Stat. 1176) and any modification authorized by any other provision of law, including section 601 of WRDA 2000.

Component means features of the Plan that include, but are not limited to, storage reservoirs, aquifer storage and recovery facilities, stormwater treatment areas, water reuse facilities, canals, levees, pumps, water control structures, and seepage management facilities, or the removal of canals, levees, pumps, and water control structures.

Comprehensive Everglades Restoration Plan (CERP) means the plan contained in the ''Final Integrated Feasibility Report and Programmatic Environmental Impact Statement,'' dated April 1, 1999, as modified by section 601 of WRDA 2000, or any subsequent modification authorized in law.

Comprehensive Plan Modification Report means the report prepared by the Corps of Engineers and the South Florida Management District for approval by Congress of major modifications to the Plan that are needed to ensure that the goals and purposes of the Plan are achieved. The Comprehensive Plan Modification Report describes alternative plans considered, the recommended modifications to the Plan, and other economic, environmental, and engineering information, and includes the appropriate NEPA document.

Concurrence means the issuance of a written statement of concurrence, or non-concurrence or the failure to provide such a written statement within a time frame prescribed by law or this part.

Consultation means a process to ensure meaningful and timely input in the development of system-wide and project-level implementation reports, manuals, plans, and other documents from Federal, State, and local agencies, and the Miccosukee Tribe of Indians of Florida and the Seminole Tribe of Florida.

Coordination means the formal exchange of information and views, by letter, report, or other prescribed means, between the Corps of Engineers and the non-Federal sponsor and another agency or tribe, including but not limited to, the exchange of information and views regarding the development of Project Implementation Reports. Coordination activities are required by and in accordance with purposes and procedures established by Federal policy (public law, executive order, agency regulation, memorandum of agreement, and other documents that memorialize policy of the Corps of Engineers).

Cost effective means the least costly way of attaining a given level of output

or performance consistent with the goals and purposes of the Plan and applicable laws.

Design Agreement means the agreement between the Corps of Engineers and a non-Federal sponsor concerning cost sharing for activities related to planning, engineering, design, and other activities needed to implement the Plan.

Design Documentation Report means the document that describes the results of investigations, analyses, and calculations made during the detailed design phase that provides the technical basis for the plans and specifications.

Dispute means any disagreement between the agencies or tribes associated with implementation of the Plan that cannot be resolved by the members of a Project Delivery Team or RECOVER and that is elevated to decision makers at the respective agencies or tribes.

District Engineer means the District Engineer of the Corps of Engineers, Jacksonville District.

Division Engineer means the Division Engineer of the Corps of Engineers, South Atlantic Division.

Drought contingency plan refers to the plan required by § 222.5(i)(5) of this chapter and described in implementing Engineer Regulation ER 1110–2–1941 Drought Contingency Plans, and means a plan contained within an Operating Manual that describes procedures for dealing with drought situations that affect management decisions for operating projects.

Environmental and economic equity means the fair treatment of all persons regardless of race, color, creed, or national origin, including environmental justice, and the provision of economic opportunities for small business concerns controlled by socially and economically disadvantaged individuals, including individuals with limited English proficiency in the implementation of the Plan.

Environmental justice means identifying and addressing, as appropriate, disproportionately high and adverse human health or environmental effects of a Federal agency's programs, policies, and activities on minority and low-income populations.

Evaluation means the process whereby the performance of plans and designs relative to desired objectives is forecast through predictive modeling.

Expected performance level means the projected level of benefits to the natural system and human environment described in the Plan.

Governor means the Governor of the State of Florida.

Improved or new flood protection benefits mean an increased or new level of service for flood protection that is identified in a Project Implementation Report and approved as a purpose of the project.

Independent scientific review means the process established pursuant to section 601(j) of WRDA 2000, or other process that is independent of the Corps of Engineers, the South Florida Water Management District, and other entities involved in the implementation of the Plan, to review and validate the scientific and technical processes and information developed for the Plan.

Independent Technical Review Team means the team established by the Corps of Engineers and the non-Federal sponsor, to ensure quality control of documents and products produced by the Project Delivery Team through periodic technical reviews.

Indicator means an element or component of the natural or human systems that is expected to be influenced by the Plan, and has been selected to be monitored as representative of a class of system responses.

Individual features of the Plan means a feature of the Plan related to and limited to one specific project of the Plan.

Interim goal is a means by which success of restoration, as defined for purposes of this part, may be evaluated throughout the implementation process.

Last added increment means the evaluation of a project as the last project to be added to a system of projects. For the purposes of the Plan, this means analyzing a proposed project assuming that all the other components of the Plan have been implemented.

Level of service for flood protection means the water level or flow duration and frequency, which the Central and Southern Project and other water management systems in the South Florida ecosystem provide in order to prevent flooding of the related surface water basins.

Master Implementation Sequencing Plan means the document that describes the sequencing and scheduling of the pilot projects, individual projects, and program-level activities that comprise the Plan.

Mediation means a non-binding dispute resolution process designed to assist the disputing parties to resolve the dispute. In mediation, the parties mutually select a neutral and impartial third party to facilitate the negotiations.

Monitoring means the systematic process of collecting data designed to show the status, trends, and relationships of elements of natural and human systems at predetermined locations and times.

Natural system means all land and water managed by the Federal government or the State within the South Florida ecosystem and includes water conservation areas; sovereign submerged land; Everglades National Park; Biscayne National Park; Big Cypress National Preserve; other Federal or State (including a political subdivision of a State) land that is designated and managed for conservation purposes; and any tribal land that is designated and managed for conservation purposes, as approved by the tribe.

Next added increment means the evaluation of a project as the next project to be added to a system of projects already implemented.

Non-Federal sponsor means a legally constituted public body that has full authority and capability to perform the terms of the Project Cooperation Agreement and the ability to pay damages, if necessary, in the event of failure to perform, pursuant to Section 221 of the Flood Control Act of 1970, as amended (42 U.S.C. 1962d–5b).

Operating Manuals means the set of documents that describe how the projects of the Plan and the Central and Southern Florida Project are to be operated to ensure that the goals and purposes of the Plan are achieved. Operating Manuals include the System Operating Manual and Project Operating Manuals. Operating Manuals may include water control plans, regulation schedules, and operating criteria for project and/or system regulations as well as additional provisions to collect, analyze, and disseminate basic data in order to operate projects to ensure that the goals and purposes of the Plan are achieved.

Outreach means activities undertaken to inform the public about the Plan and activities associated with implementation of the Plan and to involve the public in the decision-making process for implementation of the Plan.

Performance measure means an indicator and the target that has been set for that indicator.

Pilot project means a project undertaken to better determine the technical viability of a component in the Plan prior to full-scale implementation of that component.

Pilot Project Technical Data Report means the report that documents the findings and conclusions from the implementation and testing phases of a pilot project.

Plan means the Comprehensive Everglades Restoration Plan contained

in the ''Final Integrated Feasibility Report and Programmatic Environmental Impact Statement'' dated April 1, 1999, as modified by section 601 of WRDA 2000, or any subsequent modification authorized in law.

Plans and Specifications means the information required to bid and construct the project detailed in the Project Implementation Report and documented in the Design Documentation Report.

Pre-CERP baseline means the hydrologic conditions in the South Florida ecosystem that existed on December 11, 2000, the date of enactment of section 601 of WRDA 2000, accounting for natural variations and including existing legal sources of water. The pre-CERP baseline will be established through modeling using a multi-year period of record and will take into account such things as land use, population, water demand, and operations of the Central and Southern Florida Project.

Program-level activity means those tasks, activities, or products that support more than one project or that are Plan-wide in scope.

Program Management Plan means a document that defines the activities, tasks, and responsibilities for completing program-level activities.

Project means a component or group of components of the Plan that are implemented together to provide functional benefits towards achieving the goals and purposes of the Plan.

Project Cooperation Agreement (PCA) means the legal agreement between the Department of the Army and a non-Federal sponsor that is executed prior to project construction. The Project Cooperation Agreement describes the financial, legal, and other responsibilities for construction, operation, maintenance, repair, rehabilitation, and replacement of a project.

Project Delivery Team means the inter-agency, interdisciplinary group led by the Corps of Engineers and the non-Federal sponsor that develops the products necessary to implement projects or program-level activities.

Project Implementation Report (PIR) means the report prepared by the Corps of Engineers and the non-Federal sponsor pursuant to section 601(h)(4)(A) of WRDA 2000 and described in Section 10.3 of the ''Final Integrated Feasibility Report and Programmatic Environmental Impact Statement,'' dated April 1, 1999.

Project Management Plan means a document that establishes the project's scope, requirements and technical performance requirements, including various functions and quality criteria that will be used to produce and deliver the products that compromise the project.

Project Operating Manual means the manual that describes the operating criteria for a project or group of projects of the Plan. The Project Operating Manual is considered a supplement to the System Operating Manual and presents more detailed information on the operation of a specific project or group of projects.

Public means any individuals, organizations, or non-Federal unit of government that might be affected by or interested in the implementation of the Plan. The public includes regional, State, and local government entities and officials, public and private organizations, Native American (Indian) tribes, and individuals.

Quality control plan means the plan prepared in accordance with applicable regulations or policies of the Corps of Engineers that describes the procedures that will be employed to insure compliance with all technical and policy requirements of the Corps of Engineers and the non-Federal sponsor.

Reservation of water for the natural system means the actions taken by the South Florida Water Management District or the Florida Department of Environmental Protection, pursuant to Florida law, to legally reserve water from allocation for consumptive use for the protection of fish and wildlife.

Restoration for the purposes of this part means to bring about the level of recovery and protection to the South Florida ecosystem described in the Plan as approved by Congress in Section 601 of the Water Resources Development Act of 2000, with such modifications as Congress may provide for in the future. This is accomplished by increasing water storage and water supply, improving water quality, and increasing the connectivity of the natural system so that the ecosystem once again exhibits and sustains essential physical and ecological characteristics that defined the pre-drainage South Florida ecosystem, including establishing more natural hydropatterns, including wet and dry season cycles, natural recession rates, surface water depth patterns, and, in coastal areas, salinity and mixing patterns for the natural system. These actions are a precursor to achieving anticipated ecological benefits, including improvements to native flora and fauna; restoring the presence of key species in historic habitats; and promoting patterns of plant communities that form a gradient from aquatic communities to uplands. Restoration for the purpose of this regulation also incorporates a process of adaptive management to seek continuous improvement of the Plan based upon new information resulting from changed or unforeseen circumstances, new scientific or technical information, or information developed through the adaptive assessment principles contained in the Plan, or future authorized changes to the Plan integrated into the implementation of the Plan.

Restoration Coordination and Verification (RECOVER) means the interagency and interdisciplinary scientific and technical team, established by the Corps of Engineers and the South Florida Water Management District to assess, evaluate, and integrate the projects of the Plan with the overall goal of ensuring that the system-wide goals and purposes of the Plan are achieved.

Secretary means the Secretary of the Army, unless indicated otherwise. The Secretary of the Army acts through the Assistant Secretary of the Army (Civil Works) with respect to the Army's civil works program pursuant to 10 U.S.C. 3016.

South Florida ecosystem means the area consisting of the land and water within the boundary of the South Florida Water Management District in effect on July 1, 1999 and includes the Everglades, the Florida Keys, and the contiguous near-shore coastal water of South Florida.

South Florida Ecosystem Restoration Task Force means the task force established pursuant to section 528(f) of the Water Resources Development Act of 1996 (110 Stat. 3770), including the Florida-based working group and any advisory bodies established by the task force.

South Florida Water Management District (SFWMD) means the public body constituted by the State of Florida pursuant to Chapter 373.069 of the Florida Statutes.

State means the State of Florida.

System Operating Manual means the Operating Manual that provides an integrated system-wide framework for operating all of the implemented projects of the Plan and the C&SF Project.

System-wide means pertaining to the Central and Southern Florida Project or the South Florida ecosystem, as a whole.

Target means a measure of a level of output of an indicator that is expected and desired during or following the implementation of the Plan.

Technical review means the process that confirms the proper selection and application of established criteria,

regulations, laws, codes, principles, and professional procedures to ensure a quality product. Technical review also confirms the constructability and effectiveness of the product and the use of clearly justified and valid assumptions and methodologies.

Water budget means an account of all water inflows, outflows, and changes in storage over a period of time.

Water made available means water generated pursuant to the implementation of the components of the Plan and operation of the C&SF Project over and above water that was available on the date of enactment of WRDA 2000.

Without CERP condition means the conditions predicted (forecast) in the South Florida ecosystem without implementation of any of the projects of the Plan.

WRDA 2000 means the Water Resources Development Act of 2000, Public Law 106–541, which was enacted on December 11, 2000.

§ 385.4 Limitation on applicability of programmatic regulations.

In accordance with section 601(h)(3)(c)(ii) of WRDA 2000, this part expressly prohibits any requirement for concurrence by the Secretary of the Interior or the Governor on Project Implementation Reports, Project Cooperation Agreements, Operating Manuals for individual projects undertaken in the Plan, and any other documents relating to the development, implementation, and management of individual features of the Plan, unless such concurrence is provided for in other Federal or State laws.

§ 385.5 CERP guidance memoranda.

(a) *General.* (1) Technical matters and guidance for internal management of Corps of Engineers personnel during Plan implementation will be issued in the normal form of Engineer Regulations, Circulars, Manuals, or Pamphlets, or other appropriate form of guidance.

(2) Guidance on the following six program-wide subjects will be developed in accordance with paragraphs (b) and (c) of this section:

(i) General format and content of Project Implementation Reports (§ 385.26(a));

(ii) Instructions for Project Delivery Team evaluation of alternatives developed for Project Implementation Reports, their cost effectiveness and impacts (§ 385.26(b));

(iii) Guidance for system-wide evaluation of Project Implementation Report alternatives by RECOVER (§ 385.26(c));

(iv) General content of operating manuals (§ 385.28(a));

(v) General directions for the conduct of the assessment activities of RECOVER (§ 385.31(b)); and

(vi) Instructions relevant to Project Implementation Reports for identifying the appropriate quantity, timing, and distribution of water dedicated and managed for the natural system (§ 385.35(b)).

(b) *Special processes for development of six Program-wide guidance memoranda.* The Corps of Engineers and the South Florida Water Management District shall, in consultation with the Department of the Interior, the Environmental Protection Agency, the Department of Commerce, the Miccosukee Tribe of Indians of Florida, the Seminole Tribe of Florida, the Florida Department of Environmental Protection, and other Federal, State, and local agencies, develop the six guidance memoranda described in paragraph (a) of this section. In addition to consultation with the South Florida Ecosystem Restoration Task Force specified elsewhere in this part, the Corps of Engineers and the South Florida Water Management District shall consult with the South Florida Ecosystem Restoration Task Force, its working group, and its advisory bodies, on matters related to these guidance memoranda, as the Task Force from time to time may request.

(1) Guidance memoranda shall be consistent with this part, applicable law, and achieving the goals and purposes of the Plan.

(2) The public shall be given notice of the guidance memoranda through the issuance of a notice of availability in the **Federal Register** and be afforded an opportunity to comment on the proposed guidance memoranda.

(3) Completed guidance memoranda shall be made available to the public.

(4) Any guidance memorandum specifically referenced in this part shall be developed not later than six months after the effective date of the final rule published in the **Federal Register** or December 31, 2003, whichever is sooner.

(5) Concurrence by the Secretary of the Interior and the Governor shall be required on the six guidance memoranda described in paragraph (a) of this section. Within 180 days from the development of the proposed guidance memorandum, or such shorter period that the Secretary of the Interior and the Governor may agree to, the Secretary of the Interior and the Governor may provide the Secretary with a written statement of concurrence or nonconcurrence with the proposed guidance memorandum. A failure to provide a written statement of concurrence or nonconcurrence within such time frame shall be deemed as meeting the concurrency requirements of this section. Any nonconcurrency statement shall specifically detail the reason or reasons for the non-concurrence. The Corps of Engineers and the South Florida Water Management District shall give good faith consideration to any nonconcurrency statement, and take the reason or reasons for the nonconcurrence into account in the final decision to promulgate or revise the guidance memoranda specified in this section. If the six guidance memoranda described in paragraph (a) of this section create a special procedure for any individual Project Implementation Report, a specific Project Cooperation Agreement, an Operating Manual for a specific project component, or any other document relating to the development, implementation, and management of one specific individual feature of the Plan, this section does not require concurrence on that special procedure. In lieu of concurrence on such a special procedure, the Corps of Engineers and the South Florida Water Management District shall consult with the Department of the Interior and the State of Florida.

(c) *Revisions to six Program-wide guidance memoranda.* The Corps of Engineers and the South Florida Water Management District may, whenever they believe it is necessary, and in consultation with the Department of the Interior and the State, the Environmental Protection Agency, the Department of Commerce, the Miccosukee Tribe of Indians of Florida, the Seminole Tribe of Florida, the Florida Department of Environmental Protection, and other Federal, State, and local agencies, revise guidance memoranda that have been completed. Such revisions shall be developed consistent with the provisions of paragraph (a) of this section. Concurrence of the Secretary of the Interior and the Governor shall be required for revisions to those guidance memoranda to which initial concurrence was required.

(d) *Other guidance.* Nothing in this part shall be considered or construed to preclude the ability of the Corps of Engineers, the South Florida Water Management District, and other non-Federal sponsors from issuing other guidance or policy to assist in implementing the Plan. Any such guidance or policy shall be consistent with applicable law and regulations.

§ 385.6 Review of programmatic regulations.

(a) The Secretary shall review, and if necessary revise, the programmatic regulations in this part at least every five years from their date of promulgation. In addition, the Secretary may review and revise the programmatic regulations whenever the Secretary believes that such review and revision is necessary to attain the goals and purposes of the Plan. The Secretary shall place appropriate notice in the **Federal Register** upon initiating review of the programmatic regulations.

(b) Upon completing the review of the programmatic regulations in this part, the Secretary shall promulgate any revisions to the programmatic regulations after notice and opportunity for public comment in accordance with applicable law, with the concurrence of the Governor and the Secretary of the Interior, and in consultation with the Seminole Tribe of Florida, the Miccosukee Tribe of Indians of Florida, the Administrator of the Environmental Protection Agency, the Secretary of Commerce, and other Federal, State, and local agencies.

(c) Within 180 days from the end of the public comment period on the proposed revisions to the programmatic regulations in this part, or such shorter period that the Secretary of the Interior and Governor may agree to, the Secretary of the Interior and the Governor may provide the Secretary with a written statement of concurrence or nonconcurrence with the proposed revisions. A failure to provide a written statement of concurrence or nonconcurrence within such time frame shall be deemed as meeting the concurrency requirements of paragraph (b) of this section. A copy of any concurrency or nonconcurrency statements shall be made a part of the administrative record and referenced in the final revised programmatic regulations. Any nonconcurrency statement shall specifically detail the reason or reasons for the nonconcurrence. The Secretary shall give good faith consideration to any nonconcurrency statement, and take the reason or reasons for the nonconcurrence into account in the final decision to promulgate or revise the programmatic regulations.

§ 385.7 Concurrency statements.

Pursuant to section 601(h)(3)(B) of WRDA 2000, a copy of any concurrency or nonconcurrency statements by the Secretary of the Interior or the Governor to the Secretary shall be made a part of the administrative record for this part.

Subpart B—Program Goals and Responsibilities

§ 385.8 Goals and purposes of the Comprehensive Everglades Restoration Plan.

(a) The Comprehensive Everglades Restoration Plan is a framework for modifications and operational changes to the Central and Southern Florida Project that are needed to restore, preserve, and protect the South Florida ecosystem while providing for other water-related needs of the region, including water supply and flood protection. The overarching objective of the Plan is the restoration, preservation, and protection of the South Florida ecosystem while providing for other water-related needs of the region, including water supply and flood protection.

(b) The Corps of Engineers and non-Federal sponsors shall, in consultation with the Department of the Interior, the Environmental Protection Agency, the Department of Commerce, the Miccosukee Tribe of Indians of Florida, the Seminole Tribe of Florida, the Florida Department of Environmental Protection, and other Federal, State, and local agencies, implement the Plan to ensure the protection of water quality in, the reduction of the loss of fresh water from, and the improvement of the environment of the South Florida Ecosystem and to achieve and maintain the benefits to the natural system and human environment described in the Plan, and required pursuant to section 601 of WRDA 2000 for as long as the project is authorized.

(c) The goal of the Plan is to provide the quantity, quality, timing, and distribution of water necessary to achieve the goals and purposes of the Plan. The Corps of Engineers and non-Federal sponsors shall implement the projects of the Plan with the goal of achieving the expected performance level of the Plan and to seek continuous improvement of the Plan based upon new information resulting from changed or unforeseen circumstances, new scientific or technical information, new or updated models, or information developed through the adaptive assessment principles contained in the Plan, or future authorized changes to the Plan integrated into the implementation of the Plan.

§ 385.9 Implementation principles.

The Corps of Engineers and the South Florida Water Management District and other non-Federal sponsors shall, in consultation with the Department of the Interior, the Environmental Protection Agency, the Department of Commerce, the Miccosukee Tribe of Indians of Florida, the Seminole Tribe of Florida, the Florida Department of Environmental Protection, and other Federal, State, and local agencies, conduct activities, including program-level activities, necessary to implement the projects of the Plan. Such activities shall be conducted as part of an integrated implementation program, in accordance with this part, and based on the following principles:

(a) Individual projects shall be formulated based on their contribution to the system-wide goals and purposes of the Plan and the achievement of the expected performance level of the Plan, as well as on their ability to provide benefits without regard to projects not yet implemented.

(b) Interim goals shall be established pursuant to this part to provide a means for evaluating restoration success at specific time intervals during implementation. Progress on achieving other water-related needs of the region as provided for in the Plan shall also be evaluated at specific time intervals during implementation.

(c) Endorsement of the Plan as a restoration framework is not intended as a constraint on innovation in its implementation through the adaptive management process. Continuous improvement of the Plan shall be sought to ensure that new information resulting from changed or unforeseen circumstances, new scientific or technical information, or information developed through the adaptive assessment principles contained in the Plan, or future authorized changes to the Plan are integrated into the implementation of the Plan. The adaptive management process provides a means for analyzing performance of the Plan and assessing progress towards meeting the goals and purposes of the Plan as well as a basis for improving the performance of the Plan. Improving the performance of the Plan means either enhancing the benefits of the Plan in terms of restoration of the natural system while providing for other water-related needs of the region, including water supply and flood protection, or delivering Plan benefits at reduced cost.

§ 385.10 Implementation responsibilities, consultation, and coordination.

(a) *Implementing agencies.* Implementation of the projects of the Plan shall be the responsibility of the Corps of Engineers and the non-Federal sponsors as the implementing agencies for projects or program-level activities.

(b) *Consultation.* (1) *Consultation with Indian Tribes.* (i) In addition to the provision for consultation with Native

American Tribes provided for by Executive Order, the Corps of Engineers and non-Federal sponsors shall consult with and seek advise from the Miccosukee Tribe of Indians of Florida and the Seminole Tribe of Florida throughout the implementation process to ensure meaningful and timely input by tribal officials regarding programs and activities covered by this part.

(ii) In carrying out their responsibilities under section 601 of WRDA 2000 with respect to the restoration of the South Florida ecosystem, the Secretary of the Army and the Secretary of the Interior shall fulfill any obligations to the Indian tribes in South Florida under the Indian trust doctrine as well as other applicable legal obligations.

(2) *Consultation with agencies.* The Corps of Engineers and non-Federal sponsors shall consult with and seek advice from the Department of the Interior, the Environmental Protection Agency, the Department of Commerce, the Florida Department of Environmental Protection, and other Federal, State, and local agencies throughout the implementation process to ensure meaningful and timely input by those agencies regarding programs and activities covered under this part. The time for, and extent of, consultation shall be appropriate for, and limited by, the activity involved.

(c) *Coordination.* The Corps of Engineers and the non-Federal sponsor shall coordinate implementation activities and the preparation of documents with other Federal, State, and local agencies and the tribes to fulfill the requirements of Federal and State laws, such as the Fish and Wildlife Coordination Act, the National Environmental Policy Act, the Clean Air Act, the Clean Water Act, the National Historic Preservation Act, and the Endangered Species Act.

(d) *Timeliness obligations of consultation.* Consultation involves reciprocal obligations: on the part of the Corps of Engineers and the non-Federal sponsor to involve agencies, tribes, and the public at an early stage and in such a way to ensure meaningful consultation, and on the part of the parties consulted to respond in a timely and meaningful fashion so that the implementation of the Plan is not jeopardized and so that delays do not result in other adverse consequences to restoration of the natural system, to the other goals and purposes of the Plan, or to the public interest. Prescribed time limits set by regulation are too inflexible for the entire consultation process. It is expected that the Corps of Engineers and the non-Federal sponsor will set reasonable time limits for consultation on specific decisions consistent with the purposes of this part and that the parties consulted will consult in a timely and meaningful way. This part does not intend for a delay in consultation to be used as a *de facto* veto power. This part authorizes the Corps of Engineers and the non-Federal sponsor to set reasonable limits on the amount of time for consultation. In setting reasonable time limits, the agencies may consider relevant considerations such as sequencing of projects, planning, contracting and funding, and any factor listed for setting time limits for consulting under NEPA (40 CFR § 1501.8), including but not limited to, the nature and size of the proposed action, the degree to which relevant information is known or obtainable, the degree to which the action is controversial, the state of the art of analytical techniques, the number of persons affected, and the consequences of delay. In addition, the agencies should adhere to all time limits imposed by law, regulations or executive order. In appropriate circumstances, the Corps of Engineers and the non-Federal sponsor may extend the time for consultation upon a showing that delays will not result in adverse consequences to the implementation of the Plan, to the restoration of the natural system, to the other goals and purposes of the Plan, or to the public interest and that relevant considerations justify a longer time. Failure to consult with, or file comments in, a timely and meaningful way shall not be a sufficient reason for extending a consultation or comment period. Nothing in this part is intended to alter existing time limits established by statute or other regulations.

(e) *South Florida Ecosystem Restoration Task Force.* The Department of the Army recognizes the valuable role that the South Florida Ecosystem Restoration Task Force, its working group, and its other advisory bodies play in the discussion and resolution of issues related to the South Florida ecosystem. The Department of the Army and the South Florida Water Management District regularly brief the Task Force on CERP issues and regularly serve on the working group and other advisory bodies. It is the intent of the Department of the Army that the Corps of Engineers and the South Florida Water Management District and other non-Federal sponsors shall continue to provide information to, and consult with, the South Florida Ecosystem Restoration Task Force, the Florida-based working group, and advisory bodies to the Task Force as requested throughout the implementation process for the Plan. In addition to consultation with the Task Force specified elsewhere in this part, the Corps of Engineers and the South Florida Water Management District shall consult with the South Florida Ecosystem Restoration Task Force, its working group, and its advisory bodies, on other matters related to the implementation of the Plan, as the Task Force from time to time may request. Providing information to, or consulting with, the Task Force usually will occur on a case-by-case basis.

Subpart C—CERP Implementation Processes

§ 385.11 Implementation process for projects.

Generally, the Corps of Engineers and non-Federal sponsors shall develop and implement projects in accordance with a process that is shown in figure 1 in Appendix A of this part. This process covers planning, design, construction and operation of the projects. Typical steps in this process involve:

(a) *Project Management Plan.* The purpose of the Project Management Plan is to establish the project's initial scope, schedule, costs, funding requirements, and technical performance requirements, including the various functional areas performance and quality criteria that shall be used to produce and deliver the products that comprise the project.

(b) *Project Implementation Report.* The Project Implementation Report provides information on plan formulation and evaluation, engineering and design, economic benefits and estimated costs, and environmental effects to bridge the gap between the conceptual design included in the Plan and the detailed design necessary to ready a project for construction.

(c) *Design Documentation Report.* The Design Documentation Report describes the results of investigations, analyses and calculations made during the detailed design phase and provides the technical basis for the plans and specifications.

(d) *Plans and Specifications.* Plans and Specifications contain information required to bid and construct the projects detailed in the Project Implementation Report and documented in the Design Documentation Report.

(e) *Real estate acquisition.* The non-Federal sponsor is primarily responsible for acquisition of lands, easements, and rights-of-way needed for the project.

(f) *Construction.* This phase is the actual construction of a project's components and includes an interim

operation and monitoring period to ensure that the project operates as designed.

(g) *Operation and monitoring.* After the project has been constructed, it is operated in accordance with the Operating Manuals. Monitoring is also conducted to determine the effectiveness of the project and to provide information that will be used in adaptive management.

§ 385.12 Pilot projects.

(a) The Plan includes pilot projects to address uncertainties associated with certain components such as aquifer storage and recovery, in-ground reservoir technology, seepage management, and wastewater reuse. The purpose of the pilot projects is to develop information necessary to determine the technical viability of these components prior to development of a Project Implementation Report.

(b) Prior to initiating activities on a pilot project, the Corps of Engineers and the non-Federal sponsor shall develop a Project Management Plan as described in § 385.24.

(c) Project Implementation Reports shall not be necessary for pilot projects. Prior to proceeding with implementation, the Corps of Engineers and the non-Federal sponsor shall prepare a Pilot Project Design Report.

(1) The Pilot Project Design Report shall contain the technical information necessary to construct the pilot project including engineering and design, cost estimates, real estate analyses, and appropriate NEPA analyses.

(2) The Pilot Project Design Report shall include a detailed operational testing and monitoring plan to develop information to assist in determining the technical viability of certain components prior to development of a Project Implementation Report.

(3) In accordance with § 385.18, the Corps of Engineers and the non-Federal sponsor shall provide the public with opportunities to review and comment on the draft Pilot Project Design Report.

(4) The Corps of Engineers and the non-Federal sponsor shall approve the final Pilot Project Design Report in accordance with applicable law.

(d) Upon completion of operational testing and monitoring, the Corps of Engineers and the non-Federal sponsor shall, in consultation with the Department of the Interior, the Environmental Protection Agency, the Department of Commerce, the Miccosukee Tribe of Indians of Florida, the Seminole Tribe of Florida, the Florida Department of Environmental Protection, and other Federal, State, and local agencies, prepare a Pilot Project Technical Data Report, documenting the findings and conclusions from the implementation and testing of the pilot project. The Corps of Engineers and the non-Federal sponsor shall also consult with the South Florida Ecosystem Restoration Task Force in preparing the report.

(1) As appropriate, RECOVER shall conduct activities to support the preparation of the Pilot Project Technical Data Report.

(2) The independent scientific review panel established pursuant to § 385.22 shall be given the opportunity to review the draft Pilot Project Technical Data Report.

(3) In accordance with § 385.18, the Corps of Engineers and the non-Federal sponsor shall provide the public with opportunities to review and comment on the draft Pilot Project Technical Data Report.

(4) The Corps of Engineers and the non-Federal sponsor shall prepare and make public the final Pilot Project Technical Data Report.

§ 385.13 Projects implemented under additional program authority.

(a) To expedite implementation of the Plan, the Corps of Engineers and non-Federal sponsors may implement projects under the authority of section 601(c) of WRDA 2000 that are described in the Plan and that will produce a substantial benefit to the restoration, preservation and protection of the South Florida ecosystem.

(b) Each project implemented under the authority of section 601(c) of WRDA 2000 shall:

(1) In general follow the process described in § 385.11;

(2) Not be implemented until a Project Implementation Report is prepared and approved in accordance with § 385.26; and

(3) Not exceed a total cost of $25,000,000.

(c) The total aggregate cost of all projects implemented under the additional program authority shall not exceed $206,000,000.

§ 385.14 Incorporation of NEPA and related considerations into the implementation process.

(a) In implementing the CERP the Corps of Engineers shall comply with the requirements of NEPA (42 U.S.C. 4371, *et seq.*) and applicable implementing regulations.

(b) *Actions normally requiring an Environmental Impact Statement (EIS).* In addition to the actions listed in § 230.6 of this chapter, actions normally requiring an EIS are:

(1) Comprehensive Plan Modification Report;

(2) System Operating Manual or significant changes to the System Operating Manual;

(3) Project Implementation Reports, including the draft Project Operating Manual when included in the Project Implementation Report;

(4) Pilot Project Design Report, including the detailed operational testing and monitoring plan;

(5) Proposed major changes in operation and/or maintenance of completed projects; and

(6) Project Operating Manuals for any project where a Project Implementation Report is not prepared.

(c) The District Engineer may consider the use of an environmental assessment (EA) on the types of actions described in paragraph (b) of this section if early studies and coordination show that a particular action, considered individually and cumulatively, is not likely to have a significant impact on the quality of the human environment.

(d) *Actions normally requiring an EA.* In addition to the actions listed in § 230.7 of this chapter, actions normally requiring an EA, but not necessarily an EIS, are:

(1) Modifications to Project Operating Manuals for projects or groups of projects, not expected to be a major change in operation and/or maintenance; and

(2) Changes in the System Operating Manual not expected to be a major change in operation and/or maintenance.

(e) *Categorical exclusions.* In addition to the activities listed in § 230.9 of this chapter, the following actions, when considered individually and cumulatively, do not have significant effects on the quality of the human environment and are categorically excluded from NEPA documentation.

(1) Design Documentation Reports;

(2) Project Cooperation Agreements;

(3) Project Management Plans;

(4) Plans and Specifications for projects;

(5) Pilot Project Technical Data Reports;

(6) Assessment reports prepared for the adaptive management program;

(7) Minor technical changes to the System Operating Manual or Project Operating Manuals, not significant enough to warrant notice and opportunity for public comment under section 601(h)(4)(B)(ii) of WRDA 2000;

(8) Development or revision of guidance memoranda or methods such as adaptive management, monitoring, plan formulation and evaluation, quantification of water needed for the natural system or protection of existing uses, methods of determining levels of

flood protection, and similar guidance memoranda or methods; and

(9) Deviations from Operating Manuals for emergencies and unplanned minor deviations as described in applicable Corps of Engineers regulations, including § 222.5(f)(4) and § 222.5(i)(5) of this chapter, and Engineer Regulation ER 1110–2–8156 ''Preparation of Water Control Manuals.''

(f) Even though an EA or EIS is not indicated for a Federal action because of a ''categorical exclusion,'' that fact does not exempt the action from compliance with any other applicable Federal, State, or Tribal law, including but not limited to, the Endangered Species Act, the Fish and Wildlife Coordination Act, the National Historic Preservation Act, the Clean Water Act, Clean Air Act, and the Marine Mammal Protection Act.

§ 385.15 Consistency with requirements of the State of Florida.

The State of Florida has established procedures, requirements, and approvals that are needed before the State or the South Florida Water Management District can participate as the non-Federal sponsor for Comprehensive Everglades Restoration Plan projects. Project Implementation Reports shall include such information and analyses as are necessary to facilitate review and approval of projects by the non-Federal sponsor and the State pursuant to the requirements of Florida law.

§ 385.16 Design agreements.

(a) The Corps of Engineers shall execute a design agreement with each non-Federal sponsor of the projects of the Plan prior to initiation of design activities with that non-Federal sponsor.

(b) Any procedures, guidance, or documents developed by the Corps of Engineers and the non-Federal sponsor pursuant to a design agreement shall be consistent with this part.

§ 385.17 Project Delivery Team.

(a) The Corps of Engineers and the non-Federal sponsor shall assign individual project managers to be responsible for the successful implementation of projects, and to ensure that projects are planned, designed, and constructed consistent with the design agreement, Project Management Plan, and achieving the goals and purposes of the Plan.

(b) The Corps of Engineers and the non-Federal sponsor shall form a Project Delivery Team to develop the products necessary to implement the project. Project Delivery Teams shall be interdisciplinary in composition.

(c) It shall be the intent of the Corps of Engineers and the South Florida Water Management District to encourage the participation of other Federal, State, and local agencies and the Miccosukee Tribe of Indians of Florida and the Seminole Tribe of Florida on Project Delivery Teams, and to use the expertise of other agencies on Project Delivery Teams to ensure that information developed by the Project Delivery Team is shared at the earliest possible time in the implementation process. In forming the Project Delivery Team, the Corps of Engineers and the non-Federal sponsor shall request that the Department of the Interior, the Environmental Protection Agency, the Department of Commerce, the Miccosukee Tribe of Indians of Florida, the Seminole Tribe of Florida, the Florida Department of Environmental Protection, and other Federal, State, and local agencies participate on the Project Delivery Team.

(1) In general, participation on the Project Delivery Team shall be the financial responsibility of the participating agency or tribe. However, the Corps of Engineers shall provide funding for the U.S. Fish and Wildlife Service to prepare Fish and Wildlife Coordination Act Reports, as required by applicable law, regulation, or agency procedures.

(2) Participation by an agency or tribe on the Project Delivery Team shall not be considered or construed to be a substitute for consultation or coordination required by applicable law or this part.

(d) Documents, work products, or recommendations prepared by the Project Delivery Team shall not be self-executing, but shall be provided to the Corps of Engineers and the non-Federal sponsor for review, discussion, revision, and/or approval, in consultation with the Department of the Interior, the Environmental Protection Agency, the Department of Commerce, the Seminole Tribe of Florida, the Miccosukee Tribe of Indians of Florida, the Florida Department of Environmental Protection, and other Federal, State, and local agencies.

§ 385.18 Public outreach.

(a) *Goals.* (1) The goal of public outreach is to open and maintain channels of communication with the public in order to:

(i) Provide information about proposed activities to the public;

(ii) Make the public's desires, needs, and concerns known to decision-makers before decisions are reached; and

(iii) Consider the public's views in reaching decisions.

(2) In carrying out implementation activities for the Plan, the Corps of Engineers and the non-Federal sponsor shall undertake outreach activities to:

(i) Increase general public awareness for the Plan;

(ii) Involve interested groups and interested communities in the decision-making process and incorporate public values into decisions;

(iii) Better serve minority communities and traditionally under served communities, persons with limited English proficiency, and socially and economically disadvantaged individuals;

(iv) Improve the substantive quality of decisions as a result of public participation; and

(v) Reduce conflict among interested and affected parties by building agreement on solutions to emerging issues.

(b) *General Requirements.* (1) The Corps of Engineers and the non-Federal sponsors shall provide a transparent, publicly accessible process through which scientific and technical information is used in the development of policy decisions.

(2) The Corps of Engineers and the non-Federal sponsor shall develop and conduct outreach activities for each project or program-level activity in order to provide information to the public and to provide opportunities for involvement by the public.

(3) Project Management Plans and Program Management Plans shall include information concerning outreach activities to be undertaken during the implementation of the project or activity.

(4) In general, Project Delivery Team meetings and RECOVER meetings shall be open to attendance by the public. The public shall be notified in advance of these meetings through e-mail, posting on a web site, or other appropriate means. The public shall be given the opportunity to comment at such meetings.

(5) The Corps of Engineers and the non-Federal sponsor shall provide opportunities for the public to review and comment on draft documents.

(c) *Outreach to socially and economically disadvantaged communities.*

(1) The Corps of Engineers and the non-Federal sponsor shall develop and conduct public outreach activities to ensure that socially and economically disadvantaged individuals, including individuals with limited English proficiency, are provided opportunities to review and comment during implementation of the Plan.

(2) Project Management Plans and Program Management Plans shall include information concerning outreach activities to socially and economically disadvantaged communities, including individuals of limited English proficiency to be undertaken during the implementation of the project or activity.

(3) The Corps of Engineers and the non-Federal sponsor shall make project and program information available in languages other than English for individuals of limited English proficiency.

(4) The Corps of Engineers and the non-Federal sponsor shall provide translators or similar services at public meetings where a significant number of participants are expected to have limited English proficiency.

§ 385.19 Environmental and economic equity.

(a) Project Management Plans and Program Management Plans shall include information concerning environmental and economic equity activities to be undertaken during the implementation of the project or activity.

(b) As required by applicable laws and policies, the Corps of Engineers and the non-Federal sponsor shall consider and evaluate environmental justice issues and concerns in the implementation of projects.

(c) The District Engineer shall ensure that small business concerns owned and controlled by socially and economically disadvantaged individuals are provided opportunities to participate under section 15(g) of the Small Business Act (15 U.S.C. 644(g)).

§ 385.20 Restoration Coordination and Verification (RECOVER).

(a) RECOVER (Restoration Coordination and Verification) is an interagency and interdisciplinary scientific and technical team, outlined in the ''Final Integrated Feasibility Report and Programmatic Environmental Impact Statement'' dated April 1, 1999. RECOVER was established by the Corps of Engineers and the South Florida Water Management District to assess, evaluate, and integrate the projects of the Plan with the overall goal of ensuring that the system-wide goals and purposes of the Plan are achieved. RECOVER has been organized into a Leadership Group that provides management and coordination for the activities of RECOVER and a number of teams that accomplish activities such as: developing performance measures; conducting the monitoring and assessment program; evaluating projects and components developed by Project Delivery Teams in achieving the system-wide goals and purposes of the Plan; conducting system-wide water quality analyses; developing, refining, and applying system-wide models and tools; and considering modifications to the Plan. RECOVER is not a policy making body, but has technical and scientific responsibilities that assist the Corps of Engineers and the South Florida Water Management District in achieving the goals and purposes of the Plan.

(b) Any documents, reports, or recommendations, including performance measures or evaluations of alternatives developed for the Project Implementation Report, prepared or developed by RECOVER shall not be self-executing, but shall be provided to the Corps of Engineers and the South Florida Water Management District for review, discussion, revision, and/or approval, in consultation with the Department of the Interior, the Environmental Protection Agency, the Department of Commerce, the Miccosukee Tribe of Indians of Florida, the Seminole Tribe of Florida, the Florida Department of Environmental Protection, and other Federal, State, and local agencies.

(c) It shall be the intent of the Corps of Engineers and the South Florida Water Management District to encourage the participation of other Federal, State, and local agencies and the Miccosukee Tribe of Indians of Florida and the Seminole Tribe of Florida on RECOVER and to use the expertise of other agencies and the tribes on RECOVER, to ensure that information developed by RECOVER is shared at the earliest possible time, and to ensure that matters of concern are addressed as early as possible. The Corps of Engineers and the South Florida Water Management District recognize the special role of the National Marine Fisheries Service of the Department of Commerce and the Florida Fish and Wildlife Conservation Commission in marine system issues. The Corps of Engineers and the South Florida Water Management District recognize the special role of the Department of the Interior and the Florida Fish and Wildlife Conservation Commission as stewards of the natural system and for their technical and scientific activities in support of restoration. The Corps of Engineers and the South Florida Water Management District recognize the special role of the Environmental Protection Agency and the Florida Department of Environmental Protection in water quality issues. Accordingly, the Corps of Engineers and the South Florida Water Management District have used and will continue to use the Department of the Interior, Department of Commerce, the Florida Fish and Wildlife Conservation Commission, the Environmental Protection Agency, and the Florida Department of Environmental Protection as co-chairs along with the Corps of Engineers and the South Florida Water Management District on the appropriate technical teams that have been established to date as part of RECOVER.

(1) In general, participation on RECOVER shall be the financial responsibility of the participating agency or tribe.

(2) Participation by an agency or tribe on RECOVER shall not be considered or construed to be a substitute for consultation or coordination required by applicable law or this part.

(d) The Corps of Engineers and the South Florida Water Management District shall:

(1) Assign program managers to be responsible for carrying out the activities of RECOVER;

(2) Establish a RECOVER Leadership Group that shall assist the program managers in coordinating and managing the activities of RECOVER, including the establishment of sub-teams or other entities, and in reporting on the activities of RECOVER;

(3) Determine the structure and functions of the RECOVER Leadership Group, but membership shall include the Department of the Interior, the Miccosukee Tribe of Indians of Florida, the Seminole Tribe of Indians, the U.S. Environmental Protection Agency, the Florida Department of Environmental Protection, and may include other Federal, State, and local agencies; and

(e) RECOVER shall perform functions, including, but not limited to:

(1) Developing performance measures for achieving the system-wide goals and purposes of the Plan;

(2) Conducting evaluations of alternatives developed for the Project Implementation Report in achieving the system-wide goals and purposes of the Plan;

(3) Developing and implementing a monitoring plan to support the adaptive management program;

(4) Conducting assessment activities as part of the adaptive management program to assess the actual performance of the Plan;

(5) Conducting analyses associated with preparation of the Master Implementation Sequencing Plan;

(6) Developing refinements and improvements in the design or operation of the Plan during all phases of implementation;

(7) Developing and refining system-wide models and tools;

(8) Conducting activities associated with the preparation of Pilot Project Technical Reports;

(9) Conducting activities associated with preparation of Comprehensive Plan Modification Reports;

(10) Conducting activities associated with the preparation of Operating Manuals;

(11) Developing recommendations for interim goals pursuant to § 385.38;

(12) Assessing progress towards meeting the interim goals established pursuant to § 385.38;

(13) Developing recommendations for targets for evaluating progress in achieving other water-related needs of the region as provided for in the Plan pursuant to § 385.39;

(14) Assessing progress towards achieving other water-related needs of the region as provided for in the Plan pursuant to § 385.39;

(15) Cooperating with the independent scientific review panel constituted pursuant to § 385.22;

(16) Evaluating new information and science that could have an effect on the Plan; and

(17) Preparing technical information to be used in the development of the periodic reports to Congress prepared in accordance with § 385.40.

(f) RECOVER shall assist Project Delivery Teams in ensuring that project design and performance is fully linked to the system-wide goals and purposes of the Plan and to incorporate, as appropriate, information developed for Project Implementation Reports into the Plan.

(g) In carrying out its responsibilities, RECOVER shall consider projects that are not part of the Plan, but could affect the ability of the Plan to achieve its goals and purposes.

(h) As appropriate, the Corps of Engineers and the South Florida Water Management District shall consider seeking independent scientific review or other similar assistance to RECOVER in carrying out its responsibilities, including review of documents developed by RECOVER.

§ 385.21 Quality control.

(a) The Corps of Engineers and the non-Federal sponsor shall prepare a quality control plan, in accordance with applicable Corps of Engineers regulations, for each product that will be produced by a Project Delivery Team. The quality control plan shall be included in the Project Management Plan and shall describe the procedures to be used to ensure compliance with technical and policy requirements during implementation.

(b) During development of the Project Management Plan for each project, the Corps of Engineers and the non-Federal sponsor shall establish an Independent Technical Review Team to conduct reviews to ensure that products are consistent with established criteria, guidance, procedures, and policy. The members of the Independent Technical Review Team shall be independent of the Project Delivery Team and the project being reviewed, and should be knowledgeable of design criteria established for the Plan.

(c) Independent technical review is intended to be a continuous process throughout project implementation. Project managers shall coordinate accomplishment of technical reviews. The Independent Technical Review Team shall document its actions and recommendations and provide reports to the Project Delivery Team at designated points during the implementation process that shall be described in the quality control plan.

§ 385.22 Independent scientific review.

(a) The Secretary, the Secretary of the Interior, and the Governor, in consultation with the South Florida Ecosystem Restoration Task Force, shall establish an independent scientific review panel convened by a body, such as the National Academy of Sciences, to review the Plan's progress toward achieving the natural system restoration goals of the Plan pursuant to section 601(j) WRDA 2000.

(1) The Secretary, the Secretary of the Interior, and the Governor shall prepare agreements, procedures, and guidance as necessary to establish the panel and to provide for its operation in accordance with section 601(j) of WRDA 2000.

(2) Completed reports, documents, or other materials prepared by the panel shall be provided to the Secretary, the Secretary of the Interior, the Governor and the South Florida Ecosystem Restoration Task Force and shall also be made available to the public.

(3) The panel shall produce a biennial report to Congress, the Secretary, the Secretary of the Interior, and the Governor, pursuant to section 601(j) WRDA 2000, that includes an assessment of ecological indicators and other measures of progress in restoring the ecology of the natural system, based on the Plan.

(b) The Corps of Engineers and the South Florida Water Management District and other non-Federal sponsors shall cooperate with the independent scientific review panel constituted pursuant to Section 601 (j) of WRDA 2000, including responding to reasonable requests for information concerning the implementation of the Plan, and shall consider and respond to recommendations made by such panel.

(c) Notwithstanding the provisions of Section 601(j) of WRDA 2000, the Corps of Engineers, the State, or the non-Federal sponsor may establish other independent scientific review panels or peer reviews as necessary to provide assistance in implementation of the Plan.

§ 385.23 Dispute resolution.

(a) Disputes with the non-Federal sponsor concerning a Project Cooperation Agreement shall be resolved under the specific procedures of the Project Cooperation Agreement.

(b) Disputes with the non-Federal sponsor concerning design activities shall be resolved under the specific procedures of the design agreement.

(c) All other unresolved issues with the non-Federal sponsor and disputes with the State associated with the implementation of the Plan shall be resolved according to the terms of the Dispute Resolution Agreement developed by the Secretary and the Governor pursuant to section 601(i) of WRDA 2000.

(d) For disputes with parties not covered by the provisions of paragraphs (a), (b), or (c) of this section, the Corps of Engineers shall attempt to resolve the dispute in accordance with applicable statutory requirements and/or the following procedures:

(1) The parties will attempt to resolve disputes at the lowest organizational level before seeking to elevate a dispute.

(2) Any disputed matter shall first be elevated to the District Engineer and the equivalent official of the other agency, or their designees. The parties may decide to continue to elevate the dispute to higher levels within each agency.

(3) The parties to a dispute may agree to participate in mediation.

(4) When a dispute is resolved the parties shall memorialize the resolution in writing.

§ 385.24 Project Management Plans.

(a) *General requirements.* (1) The Corps of Engineers and the non-Federal sponsor shall, in consultation with the Department of the Interior, the Environmental Protection Agency, the Department of Commerce, the Seminole Tribe of Florida, the Miccosukee Tribe of Indians of Florida, the Florida Department of Environmental Protection, and other Federal, State, and local agencies, develop a Project Management Plan prior to initiating activities on a project.

(2) The Project Management Plan shall define the activities, and where

appropriate, the subordinate tasks, as well as the assignment of responsibility for completing products such as Project Implementation Reports, Pilot Project Design Reports, Design Documentation Reports, plans and specifications, real estate acquisition, construction contracts and construction, Comprehensive Plan Modification Reports, and other activities necessary to support the delivery of projects.

(3) The Project Management Plan shall include a quality control plan, as described in § 385.21.

(4) As appropriate, the Project Management Plan shall include activities to be conducted to meet the requirements of the Fish and Wildlife Coordination Act, as described in § 385.26(e).

(5) The Project Management Plan shall provide schedule and funding information for the project.

(6) In accordance with § 385.18, Corps of Engineers and the non-Federal sponsor shall provide opportunities for the public to review and comment on the Project Management Plan.

(b) *Changes to Project Management Plans.* The Corps of Engineers and the non-Federal sponsor may, in consultation with the Department of the Interior, the Environmental Protection Agency, the Department of Commerce, the Seminole Tribe of Florida, the Miccosukee Tribe of Indians of Florida, the Florida Department of Environmental Protection, and other Federal, State, and local agencies, revise the Project Management Plan whenever necessary, including after completion of the Project Implementation Report, Design Documentation Report, or Plans and Specifications.

§ 385.25 Program Management Plans.

(a) *General requirements.* (1) The Corps of Engineers and the non-Federal sponsor shall, in consultation with the Department of the Interior, the Environmental Protection Agency, the Department of Commerce, the Seminole Tribe of Florida, the Miccosukee Tribe of Indians of Florida, the Florida Department of Environmental Protection, and other Federal, State, and local agencies, develop a Program Management Plan prior to initiating program-level activities.

(2) The Program Management Plan shall define the activities, and where appropriate, the subordinate tasks, as well as the assignment of responsibility for completing products developed in support to program-level activities.

(3) In accordance with § 385.18, Corps of Engineers and the non-Federal sponsor shall provide opportunities for the public to review and comment on the Program Management Plan.

(b) *Changes to Program Management Plans.* The Corps of Engineers and the non-Federal sponsor may, in consultation with the Department of the Interior, the Environmental Protection Agency, the Department of Commerce, the Seminole Tribe of Florida, the Miccosukee Tribe of Indians of Florida, the Florida Department of Environmental Protection, and other Federal, State, and local agencies, revise the Program Management Plan whenever necessary to incorporate new or changed information that affects the scope, schedule, or budget of the activities described in the Program Management Plan.

§ 385.26 Project Implementation Reports.

(a) *General requirements.* (1) The Project Implementation Report is a document containing additional project formulation and evaluation as well as more detailed engineering and design. The Project Implementation Report bridges the gap between the conceptual level of detail contained in the ''Final Integrated Feasibility Report and Programmatic Environmental Impact Statement'' and the detailed design necessary to proceed to construction. Prior to implementation of a project, the Corps of Engineers and the non-Federal sponsor shall, in consultation with the Department of the Interior, the Environmental Protection Agency, the Department of Commerce, the Seminole Tribe of Florida, the Miccosukee Tribe of Indians of Florida, the Florida Department of Environmental Protection, and other Federal, State, and local agencies, complete a Project Implementation Report addressing the project component's economic and environmental benefits, engineering feasibility, and other factors required by section 601(h)(4)(A) of WRDA 2000. To eliminate duplication with State and local procedures, the Project Implementation Report shall also address the factors of relevant State laws including sections 373.1501 and 373.470 of the Florida Statutes.

(2) The Project Implementation Report shall:

(i) Be consistent with the Plan and this part;

(ii) Be based on the best available science;

(iii) Comply with all applicable Federal, State, or Tribal laws;

(iv) Contain sufficient information for proceeding to final design of the project, such as: additional plan formulation and evaluation, engineering and design, economics, environmental analyses, flood damage assessment, real estate analyses, and the preparation of supplemental National Environmental Policy Act documents;

(v) In accordance with section 601(b)(2)(A)(ii) of WRDA 2000, comply with applicable water quality standards and applicable water quality permitting requirements;

(vi) Identify, pursuant to § 385.35, the appropriate quantity, timing, and distribution of water dedicated and managed for the natural system;

(vii) Identify the amount of water to be reserved or allocated for the natural system under State law necessary to implement the provisions in paragraphs (a)(2)(v) and (vi) of this section;

(viii) Identify the quantity, timing, and distribution of water made available for other water-related needs of the region;

(ix) Determine, pursuant to § 385.36, if existing legal sources of water are to be transferred or eliminated;

(x) Determine, pursuant to § 385.37(b) if a proposed implementation of the Plan would reduce levels of service for flood protection:

(A) In existence on the date of enactment of section 601 of WRDA 2000; and

(B) In accordance with applicable law and consider, as appropriate, pursuant to § 385.37(c), opportunities to provide additional flood protection;

(xi) Include an analysis concerning costs and benefits, cost-effectiveness, and engineering feasibility of the project;

(xii) Include an analysis, prepared by RECOVER as described in paragraph (c)(2) of this section, of the project's effect on achieving the system-wide goals and purposes of the Plan, and recommendations, if necessary, concerning modifications to the Plan to ensure that the goals and purposes of the Plan are achieved and a response, as appropriate, to the analysis and recommendations prepared by RECOVER; and

(xiii) To eliminate duplication with State and local procedures, include, as appropriate, information necessary for the non-Federal sponsor to address the requirements of Chapter 373 of the Florida Statutes, and other applicable planning and reporting requirements of Florida law.

(3) The Corps of Engineers and the non-Federal sponsor shall develop the Project Implementation Report generally in accordance with the process shown in figure 2 in Appendix A of this part.

(4) The Corps of Engineers and the South Florida Water Management District shall, with the concurrence of the Secretary of the Interior and the Governor, develop a guidance

memorandum in accordance with § 385.5 that describes the major tasks that are generally needed to prepare a Project Implementation Report and the format and content of a Project Implementation Report.

(b) *Formulation and evaluation.*

(1) In preparing a Project Implementation Report, the Corps of Engineers and the non-Federal sponsor shall formulate and evaluate alternatives to better define and refine project plan components to optimize the project's contributions towards the system-wide goals and purposes of the Plan. In designing individual project components, Project Delivery Teams shall attempt to stay within the funding target for the project established in the ''Final Integrated Feasibility Report and Programmatic Environmental Impact Statement,'' dated April 1, 1999, adjusted for inflation. In cases where it is not feasible to accomplish the project goals and purposes without exceeding this target, or where the project ratio of benefits to costs can be significantly improved by exceeding the target, the PIR shall document deviations from the funding target in the ''Final Integrated Feasibility Report and Programmatic Environmental Impact Statement,'' dated April 1, 1999 and explain the need for such deviations.

(i) *General.* The Corps of Engineers and the South Florida Water Management District shall, with the concurrence of the Secretary of the Interior and the Governor, develop a guidance memorandum in accordance with § 385.5 that describes the processes to be used to formulate and evaluate alternatives, their costs and benefits, both monetary and non-monetary, and their cost effectiveness, and the basis for scoping and selecting the features which comprise the selected alternative. Project Implementation Reports approved before the date of promulgation of these regulations or the development of a guidance memorandum may use whatever method that, in the District Engineer's discretion, and in cooperation with the non-Federal sponsor, is deemed appropriate and is consistent with applicable law and the Programmatic Regulations in this part.

(ii) *System formulation and evaluation.* The guidance memorandum shall describe the process for formulating alternatives to optimize contributions to the system-wide goals and purposes of the Plan by including each alternative with all of the other components of the Plan and comparing total benefits and costs of the alternative under both the with-CERP and the without CERP condition.

(iii) *Interim project assessment.* The guidance memorandum shall also include a process for evaluation of each alternative as the next added increment of the Plan for the purposes of impact assessment, evaluating the project's contribution toward achieving the interim goals and targets for other water related needs, determining appropriate sequencing of the project and determining if the benefits of the alternative justify its costs without regard to projects not yet implemented.

(iv) *Identification of selected alternative.* The guidance memorandum shall also include a process for identification of the selected alternative, based on the analyses conducted in paragraphs (b)(1)(ii) and (iii) of this section. This alternative should be justified based on the project's contributions to both the system-wide goals and purposes of the Plan and the interim goals and targets. If the alternative cannot be justified on a next added basis, it should be justified based on sequencing factors, dependency of other CERP projects on its completion, and/or operational considerations. The Guidance Memorandum shall also include an evaluation of the selected alternative as the last added increment of the Plan to determine the incremental benefits and costs of the project in terms of how it contributes to achievement of the system-wide goals and purposes of the Plan. This analysis should also identify the extent to which benefits are dependent on other components of the Plan, and note any benefits that will also be included in the last added increment analysis for other projects. The PIR should also include an identification of the water to be reserved for the natural system, based on the next added increment analysis.

(c) *RECOVER Performance Evaluation of Alternatives for a Project Implementation Report.* (1) The Corps of Engineers and the South Florida Water Management District shall, with the concurrence of the Secretary of the Interior and the Governor, develop a guidance memorandum in accordance with § 385.5 that describes the process to be used by RECOVER for the evaluation of alternatives developed for the Project Implementation Report in achieving the goals and purposes of the Plan.

(2) RECOVER shall evaluate the performance of alternatives developed for the Project Implementation Report towards achieving the goals and purposes of the Plan using appropriate performance measures.

(3) RECOVER shall prepare information for the Project Delivery Team describing the results of the evaluations of alternatives developed for the Project Implementation Report towards achieving the goals and purposes of the Plan, including, as appropriate, recommendations and suggestions for improving the performance of the alternatives.

(d) *National Environmental Policy Act Documentation.* (1) The Corps of Engineers and the non-Federal sponsor shall prepare the appropriate NEPA document for inclusion in the Project Implementation Report. The NEPA document for the Project Implementation Report shall use the Programmatic Environmental Impact Statement included in the ''Final Integrated Feasibility Report and Programmatic Environmental Impact Statement'' dated April 1, 1999 as appropriate for the purpose of tiering as described in § 230.14(c) of this chapter.

(2) Whenever possible, the NEPA document shall be integrated into the Project Implementation Report.

(3) As appropriate, other agencies shall be invited to be cooperating agencies in the preparation of the NEPA document pursuant to § 230.16 of this chapter.

(4) The District Engineer is the NEPA official responsible for compliance with NEPA for actions conducted to implement the Plan. Unless otherwise provided for by this part, NEPA coordination for CERP implementation shall follow the NEPA procedures established in part 230 of this chapter.

(5) The District Engineer shall prepare the Record of Decision for Project Implementation Reports. Review and signature of the Record of Decision shall follow the same procedures as for review and approval of feasibility reports in § 230.14 of this chapter and other applicable Corps of Engineers regulations.

(e) *Fish and Wildlife Coordination Act Requirements.* (1) The Corps of Engineers and the non-Federal sponsor shall coordinate with the U.S. Fish and Wildlife Service, the National Marine Fisheries Service, the Florida Fish and Wildlife Conservation Commission, and other appropriate agencies in the preparation of a Project Implementation Report, as required by applicable law.

(2) The Project Management Plan shall include a discussion of any activities to be conducted for compliance with the Fish and Wildlife Coordination Act and other applicable laws.

(3) As appropriate, coordination shall include preparation of the following as shown in figure 2 in Appendix A of this part:

(i) Planning Aid Letter that describes the fish and wildlife resources in the

project area and any recommendations to assist the planning process;

(ii) Fish and Wildlife Issues and Recommendations on effects, concerns, and issues about alternative plans; and

(iii) Draft and final Coordination Act Reports that provide the formal views of the U.S. Fish and Wildlife Service, the National Marine Fisheries Service, and the Florida Fish and Wildlife Conservation Commission on alternative plans.

(f) *Project Implementation Report review and approval process.*

(1) The Corps of Engineers and the non-Federal sponsor shall provide opportunities for review and comment by the public on the draft Project Implementation Report and NEPA document, in accordance with applicable law.

(2) Upon approval of the Project Implementation Report by the Division Engineer and the non-Federal sponsor, the Division Engineer shall issue a public notice announcing completion of the Project Implementation Report based upon:

(i) His/her endorsement of the findings and recommendations of the District Engineer and the non-Federal sponsor; and

(ii) His/her assessment that the report is in accord with current policy. The notice shall indicate that the report has been submitted for Washington level review.

(3) Headquarters, US Army Corps of Engineers shall coordinate the Washington level review in accordance with applicable policies and regulations of the Corps of Engineers. Headquarters, US Army Corps of Engineers shall administer the 30-day state and agency review of the Project Implementation Report as required by law.

(4) After completion of the policy review, the Chief of Engineers shall transmit the Chief of Engineers Report to the Assistant Secretary of the Army for Civil Works for review.

(5) The Assistant Secretary of the Army for Civil Works shall review all Project Implementation Reports.

(i) For projects authorized by section 601(c) of WRDA 2000, the Assistant Secretary of the Army for Civil Works shall review and approve the Project Implementation Report prior to implementation of the project.

(ii) For projects authorized by section 601(b)(2)(C) of WRDA 2000, the Assistant Secretary of the Army for Civil Works shall transmit the Project Implementation Report to the Committee on Transportation and Infrastructure of the House of Representatives and the Committee on Environment and Public Works of the Senate for approval.

(iii) For all other projects, the Assistant Secretary of the Army for Civil Works shall transmit the Project Implementation Report to Congress for authorization.

(6) The non-Federal sponsor may use the Project Implementation Report as the basis for obtaining approval under applicable Florida law.

§ 385.27 Project Cooperation Agreements.

(a) *General.* Prior to initiating construction or implementation of a project, the Corps of Engineers shall execute a Project Cooperation Agreement with the non-Federal sponsor in accordance with applicable law.

(b) *Verification of water reservations.* The Project Cooperation Agreement shall include a finding that a reservation or allocation of water for the natural system as identified in the Project Implementation Report has been executed under State law.

(c) *Changes to water reservations.* Reservations or allocations of water are a State responsibility. Any change to the reservation or allocation of water for the natural system made under State law shall require an amendment to the Project Cooperation Agreement. The Secretary shall verify, in consultation with the South Florida Water Management District, the Florida Department of Environmental Protection, the Department of the Interior, the Environmental Protection Agency, the Department of Commerce, the Seminole Tribe of Florida, the Miccosukee Tribe of Indians of Florida, and other Federal, State, and local agencies that the revised reservation or allocation continues to provide for an appropriate quantity, timing and distribution of water dedicated and managed for the natural system after considering any changed circumstances or new information since completion of the Project Implementation Report. In accordance with applicable State law, the non-Federal sponsor shall provide opportunities for the public to review and comment on any proposed changes in the water reservation made by the State.

(d) *Savings clause provisions.* The Project Cooperation Agreement shall include a provision that the Corps of Engineers and the non-Federal sponsor shall not:

(1) Eliminate or transfer existing legal sources of water until a new source of comparable quantity and quality as that available on the date of enactment of WRDA 2000 is available to replace the water to be lost as a result of implementation of the Plan; and

(2) Reduce levels of service for flood protection that are:

(i) In existence on the date of enactment of WRDA 2000; and

(ii) In accordance with applicable law.

§ 385.28 Operating Manuals.

(a) *General provisions.* (1) The Corps of Engineers and the non-Federal sponsor shall, in consultation with the Department of the Interior, the Environmental Protection Agency, the Department of Commerce, the Seminole Tribe of Florida, the Miccosukee Tribe of Indians of Florida, the Florida Department of Environmental Protection, and other Federal, State, and local agencies, develop Operating Manuals to ensure that the goals and purposes of the Plan are achieved.

(2) Operating Manuals for the Plan shall consist of a System Operating Manual and Project Operating Manuals. In general, the System Operating Manual shall provide a system-wide operating plan for the operation of the projects of the Plan and other C&SF Project features. The Project Operating Manuals shall provide the details necessary for integrating the operation of the individual projects with the system operation described in the System Operating Manual.

(3) The Division Engineer and the non-Federal sponsor shall approve Operating Manuals prior to their development or revision.

(4) In accordance with applicable law the Corps of Engineers and the non-Federal sponsor shall only carry out any significant modifications to Operating Manuals after notice and opportunity for public comment.

(5) The Corps of Engineers and the South Florida Water Management District shall, with the concurrence of the Secretary of the Interior and the Governor, develop a guidance memorandum in accordance with § 385.5 that describes the content of Operating Manuals and the tasks necessary to develop Operating Manuals.

(6) Operating Manuals shall:

(i) Describe regulation schedules, water control, and operating criteria for a project, group of projects, or the entire system;

(ii) Make provisions for the natural fluctuation of water made available in any given year and fluctuations necessary for the natural system as described in the Plan;

(iii) Be consistent with the identification of the appropriate quantity, timing, and distribution of water for the natural system;

(iv) Be consistent with applicable water quality standards and applicable water quality permitting requirements;

(v) Be consistent with the water reservation or allocation for the natural system and the savings clause provisions described in the Project Implementation Report and the Project Cooperation Agreement and the provisions of § 385.35(b), § 385.36 and § 385.37;

(vi) Include a drought contingency plan as required by § 222.5(i)(5) of this chapter and Engineer Regulation ER 1110–2–1941;

(vii) Include NEPA documentation, as appropriate;

(viii) Allow for adjustments during the year when substantial departures from expected rainfall and runoff occur, or are necessary based on adaptive management; and

(ix) Include provisions authorizing temporary deviations from all applicable regulations for emergencies and unplanned minor deviations as described in applicable Corps of Engineers regulations, including § 222.5(f)(4) and § 222.5(i)(5) of this chapter, and Engineer Regulation ER 1110–2–8156 ''Preparation of Water Control Manuals.'' However, deviations shall be minimized by including planning for flooding events caused by rainfall and hurricane events, as well as by including a drought contingency plan.

(7) As appropriate, RECOVER shall conduct activities associated with the preparation of Operating Manuals as described in § 385.20.

(8) Except as provided in this part, operating manuals generally shall follow the procedures for water control plans in § 222.5 of this chapter and applicable Corps of Engineers regulations for preparation of water control manuals and regulation schedules, including Engineer Regulation ER 1110–2–8156.

(b) *System Operating Manual.* (1) The Corps of Engineers and the South Florida Water Management District shall, in consultation with the Department of the Interior, the Environmental Protection Agency, the Department of Commerce, the Seminole Tribe of Florida, the Miccosukee Tribe of Indians of Florida, the Florida Department of Environmental Protection, and other Federal, State, and local agencies, develop a System Operating Manual that provides a system-wide operating plan for the operation of implemented projects of the Plan and other C&SF Project features to ensure that the goals and purposes of the Plan are achieved.

(2) The System Operating Manual shall initially be based on the existing completed Central and Southern Florida Project features and shall be initially developed by the Corps of Engineers as provided in § 222.5(g) of this chapter and by the South Florida Water Management District as its laws and regulations require. Existing water control plans, regulation schedules, and Master Water Control Plans shall remain in effect until development of the System Operating Manual.

(3) The System Operating Manual shall be revised whenever the Corps of Engineers and the non-Federal Sponsor, in consultation with the Department of the Interior, the Environmental Protection Agency, the Department of Commerce, the Seminole Tribe of Florida, the Miccosukee Tribe of Indians of Florida, the Florida Department of Environmental Protection, and other Federal, State, and local agencies, believe it is necessary due to making operational changes that have system-wide effects or prior to the completion of new projects that are expected to have system-wide effects.

(4) Except as provided in this part, the System Operating Manual shall follow the procedures for preparation of water control manuals, regulation schedules and Master Water Control Manuals in § 222.5 of this chapter and applicable Corps of Engineers regulations.

(c) *Project Operating Manuals.* (1) The Corps of Engineers and the non-federal sponsor shall, in consultation with the Department of the Interior, the Environmental Protection Agency, the Department of Commerce, the Seminole Tribe of Florida, the Miccosukee Tribe of Indians of Florida, the Florida Department of Environmental Protection, and other Federal, State, and local agencies, develop a Project Operating Manual for each project of the Plan that is implemented.

(2) Project Operating Manuals shall be considered as supplements to the System Operating Manual, and present aspects of the projects not common to the system as a whole.

(3) Each Project Implementation Report shall, as appropriate, include a draft Project Operating Manual as an appendix to the Project Implementation Report.

(4) As necessary, the draft Project Operating Manual shall be revised for project construction phase and the monitoring and testing phase after completion of project construction.

(5) The final Project Operating Manual shall be completed as soon as practicable after completion of the operational testing and monitoring phase of the project. The completed project shall continue to be operated in accordance with the approved draft Project Operating Manual until the final Project Operating Manual is approved.

§ 385.29 Other project documents.

(a) Whenever necessary, the Corps of Engineers and the non-Federal sponsor shall prepare a Design Documentation Report to provide additional design details needed for the preparation of Plans and Specifications for the project. Such documents shall be approved in accordance with applicable policies of the Corps of Engineers and the non-Federal sponsor.

(b) The Corps of Engineers and the non-Federal sponsor shall prepare Plans and Specifications necessary for construction of the project. Such documents shall be approved in accordance with applicable policies of the Corps of Engineers and the non-Federal sponsor.

(c) The Corps of Engineers and the non-Federal sponsor may prepare other documents as necessary during the real estate acquisition and construction phases of the project. Such documents shall be approved in accordance with applicable policies of the Corps of Engineers and the non-Federal sponsor.

Subpart D—Incorporating New Information Into the Plan

§ 385.30 Master Implementation Sequencing Plan.

(a) The Corps of Engineers and the South Florida Water Management District shall, in consultation with the Department of the Interior, the Environmental Protection Agency, the Department of Commerce, the Seminole Tribe of Florida, the Miccosukee Tribe of Indians of Florida, the Florida Department of Environmental Protection, and other Federal, State, and local agencies, develop a Master Implementation Sequencing Plan that includes the sequence and schedule for implementation of all of the projects of the Plan, including pilot projects and operational elements, based on the best scientific, technical, funding, contracting, and other information available.

(1) Projects shall be sequenced and scheduled to maximize the achievement of the goals and purposes of the Plan at the earliest possible time and in the most cost-effective way, including the achievement of the interim goals established pursuant to § 385.38 and the targets for achieving progress towards other water-related needs of the region provided for in the Plan established pursuant § 385.39, to the extent

practical given funding, engineering, and other constraints.

(2) The Master Implementation Sequencing Plan shall include appropriate discussion of the logic, constraints, and other parameters used in developing the sequence and schedule of projects.

(3) In accordance with § 385.18, Corps of Engineers and the non-Federal sponsor shall provide opportunities for the public to review and comment on the Master Implementation Sequencing Plan.

(4) The existing sequence and schedule developed by the Corps of Engineers and the South Florida Water Management District shall remain in effect until the Master Implementation Sequencing Plan is developed.

(b) At least annually, the Corps of Engineers and the South Florida Water Management District shall, in consultation with the Department of the Interior, the Environmental Protection Agency, the Department of Commerce, the Seminole Tribe of Florida, the Miccosukee Tribe of Indians of Florida, the Florida Department of Environmental Protection, and other Federal, State, and local agencies, review the Master Implementation Sequencing Plan.

(1) The Master Implementation Sequencing Plan may be revised as necessary, and consistent with the goals and purposes of the Plan, to incorporate new information such as:

(i) Updated schedules from Project Management Plans;

(ii) The results of pilot projects and other studies;

(iii) Updated funding information;

(iv) Approved revisions to the Plan;

(v) Congressional or other authorization or direction;

(vi) Information resulting from the adaptive management program including new information on costs and benefits; or

(vii) Progress towards achieving the interim goals established pursuant to § 385.38 and the targets for achieving progress towards other water-related needs of the region provided for in the Plan established pursuant to § 385.39.

(2) As appropriate, proposed revisions to the Master Implementation Sequencing Plan shall be evaluated by RECOVER for effects on plan performance.

(3) The revised Master Implementation Sequencing Plan shall include information about the reasons for the changes to the sequence and schedule of individual projects.

(4) In accordance with § 385.18 the Corps of Engineers and the non-Federal sponsor shall provide opportunities for the public to review and comment on revisions to the Master Implementation Sequencing Plan.

§ 385.31 Adaptive Management Program.

(a) *General.* The Corps of Engineers and the South Florida Water Management District shall, in consultation with the Department of the Interior, the Environmental Protection Agency, the Department of Commerce, the Seminole Tribe of Florida, the Miccosukee Tribe of Indians of Florida, the Florida Department of Environmental Protection, and other Federal, State, and local agencies, establish an adaptive management program to assess responses of the system to implementation of the Plan; to determine whether or not these responses match expectations, including the achievement of the expected performance level of the Plan, the interim goals established pursuant to § 385.38, and the targets for achieving progress towards other water-related needs of the region provided for in the Plan established pursuant § 385.39; to determine if the Plan, system or project operations, or the sequence and schedule of projects should be modified to achieve the goals and purposes of the Plan or to increase benefits or improve cost effectiveness; and to seek continuous improvement of the Plan based upon new information resulting from changed or unforeseen circumstances, new scientific or technical information, new or updated models, or information developed through the adaptive assessment principles contained in the Plan, or future authorized changes to the Plan integrated into the implementation of the Plan. Endorsement of the Plan as a restoration framework is not intended as an artificial constraint on innovation in its implementation.

(b) *Assessment activities.* (1) RECOVER shall design an assessment program to assess responses of the system to implementation of the Plan, and the Corps of Engineers and the South Florida Water Management District shall, with the concurrence of the Secretary of the Interior and the Governor, develop a guidance memorandum, in accordance with § 385.5, that describes the processes to be used to conduct these assessments.

(2) RECOVER shall develop and implement a monitoring plan that is designed to measure status and trends towards achieving the system-wide goals and purposes of the Plan.

(3) RECOVER shall use the information collected and analyzed through the monitoring program as a basis for conducting assessment tasks, which may include, but are not limited to, the following:

(i) Determining if measured responses are undesirable or are falling short of achieving interim goals or the expected performance level of the Plan;

(ii) Evaluating if corrective actions to improve performance or improve cost-effectiveness should be considered; and

(iii) Preparing annual reports on the monitoring program.

(4) Whenever it is deemed necessary, but at least every five years, RECOVER shall prepare an assessment report for approval by the Corps of Engineers and the South Florida Water Management District, in consultation with the Department of the Interior, the Environmental Protection Agency, the Department of Commerce, the Seminole Tribe of Florida, the Miccosukee Tribe of Indians of Florida, the Florida Department of Environmental Protection, and other Federal, State, and local agencies, that presents an assessment of whether the goals and purposes of the Plan are being achieved, including whether interim goals and targets for evaluating progress on achieving other water-related needs of the region are being achieved or are likely to be achieved.

(i) The Corps of Engineers and the South Florida Water Management District shall also consult with the South Florida Ecosystem Restoration Task Force in preparing the report.

(ii) The independent scientific review panel established pursuant to § 385.22 shall be provided an opportunity to review the draft assessment report.

(iii) In accordance with § 385.18, Corps of Engineers and the South Florida Water Management District shall provide opportunities for the public to review and comment on the draft assessment report.

(c) *Management actions.* (1) *General.* In seeking continuous improvement of the Plan based upon new information resulting from changed or unforeseen circumstances, new scientific or technical information, new or updated models, or information developed through the adaptive assessment principles contained in the Plan, or future authorized changes to the Plan integrated into the implementation of the Plan, the Corps of Engineers and the South Florida Water Management District and other non-Federal sponsors, in consultation with the Department of the Interior, the Environmental Protection Agency, the Department of Commerce, the Seminole Tribe of Florida, the Miccosukee Tribe of Indians of Florida, the Florida Department of Environmental Protection, and other Federal, State, and local agencies, shall

use the assessment reports prepared by RECOVER, information resulting from the activities of the independent scientific review panel pursuant to § 385.22, or other appropriate information including progress towards achievement of the interim goals established pursuant to§ 385.38 and the targets for achieving progress towards other water-related needs of the region provided for in the Plan established pursuant to § 385.39. In developing improvements to the Plan, the Corps of Engineers and the South Florida Water Management District shall, in consultation with the Department of the Interior, the Environmental Protection Agency, the Department of Commerce, the Seminole Tribe of Florida, the Miccosukee Tribe of Indians of Florida, the Florida Department of Environmental Protection, and other Federal, State, and local agencies, consider the following actions:

(i) Modifying current operations of the Plan;

(ii) Modifying the design or operational plan for a project of the Plan not yet implemented;

(iii) Modifying the sequence or schedule for implementation of the Plan;

(iv) Adding new components to the Plan or deleting components not yet implemented;

(v) Removing or modifying a component of the Plan already in place; or

(vi) A combination of these.

(2) *Operational changes.* Whenever the Corps of Engineers and the South Florida Water Management District, in consultation with the Department of the Interior, the Environmental Protection Agency, the Department of Commerce, the Seminole Tribe of Florida, the Miccosukee Tribe of Indians of Florida, the Florida Department of Environmental Protection, and other Federal, State, and local agencies, determine that changes to operations are necessary to ensure that the goals and purposes of the Plan are achieved or that they are achieved cost-effectively, including achievement of the interim goals established pursuant to § 385.38 and the targets for achieving progress towards other water-related needs of the region provided for in the Plan established pursuant to § 385.39, the Corps of Engineers and the South Florida Water Management District shall, in consultation with the Department of the Interior, the Environmental Protection Agency, the Department of Commerce, the Seminole Tribe of Florida, the Miccosukee Tribe of Indians of Florida, the Florida Department of Environmental Protection, and other Federal, State, and local agencies, prepare revisions to the Operating Manuals in accordance with the provisions of § 385.28.

(3) *Sequence and schedule changes.* Whenever the Corps of Engineers and the South Florida Water Management District, in consultation with the Department of the Interior, the Environmental Protection Agency, the Department of Commerce, the Seminole Tribe of Florida, the Miccosukee Tribe of Indians of Florida, the Florida Department of Environmental Protection, and other Federal, State, and local agencies, determine that changes to the sequence and schedule for implementation of the Plan are necessary to ensure that the goals and purposes of the Plan are achieved or that they are achieved cost-effectively, including achievement of the interim goals established pursuant to § 385.38 and the targets for achieving progress towards other water-related needs of the region provided for in the Plan established pursuant to § 385.39, the Corps of Engineers and the South Florida Water Management District shall, in consultation with the Department of the Interior, the Environmental Protection Agency, the Department of Commerce, the Seminole Tribe of Florida, the Miccosukee Tribe of Indians of Florida, the Florida Department of Environmental Protection, and other Federal, State, and local agencies, prepare revisions to the Master Implementation Sequencing Plan in accordance with the provisions of § 385.30.

(4) *Plan changes.* Whenever the Corps of Engineers and the South Florida Water Management District, in consultation with the Department of the Interior, the Environmental Protection Agency, the Department of Commerce, the Seminole Tribe of Florida, the Miccosukee Tribe of Indians of Florida, the Florida Department of Environmental Protection, and other Federal, State, and local agencies, determine that changes to the Plan are necessary to ensure that the goals and purposes of the Plan are achieved or that they are achieved cost-effectively, including achievement of the interim goals established pursuant to § 385.38 and the targets for achieving progress towards other water-related needs of the region provided for in the Plan established pursuant to § 385.39, the Corps of Engineers and the South Florida Water Management District shall, in consultation with the Department of the Interior, the Environmental Protection Agency, the Department of Commerce, the Seminole Tribe of Florida, the Miccosukee Tribe of Indians of Florida, the Florida Department of Environmental Protection, and other Federal, State, and local agencies, prepare a Comprehensive Plan Modification Report in accordance with § 385.32.

§ 385.32 Comprehensive Plan Modification Report.

Whenever, the Corps of Engineers and the South Florida Water Management District determine, in consultation with the Department of the Interior, the Environmental Protection Agency, the Department of Commerce, the Seminole Tribe of Florida, the Miccosukee Tribe of Indians of Florida, the Florida Department of Environmental Protection, and other Federal, State, and local agencies, that changes to the Plan are necessary to ensure that the goals and purposes of the Plan are achieved or that they are achieved cost-effectively, the Corps of Engineers and the South Florida Water Management District shall, in consultation with the Department of the Interior, the Environmental Protection Agency, the Department of Commerce, the Seminole Tribe of Florida, the Miccosukee Tribe of Indians of Florida, the Florida Department of Environmental Protection, and other Federal, State, and local agencies, prepare a Comprehensive Plan Modification Report using a process that is consistent with the provisions of § 385.10, § 385.18, and § 385.19. The Corps of Engineers and the South Florida Water Management District shall also consult with the South Florida Ecosystem Restoration Task Force in preparing the report.

(a) *General requirements.* The Comprehensive Plan Modification Report shall:

(1) Be initiated at the discretion of the Corps of Engineers and the South Florida Water Management District after consideration of the recommendations of RECOVER, requests from the Department of the Interior or the State, or other appropriate information;

(2) Comply with all applicable Federal and State laws, including the National Environmental Policy Act, the Endangered Species Act, the Fish and Wildlife Coordination Act, the National Historic Preservation Act, the Clean Water Act, the Safe Drinking Water Act, the Clean Air Act, and any other applicable law;

(3) Contain information such as: plan formulation and evaluation, engineering and design, economics, environmental analyses, flood damage assessment, and real estate analyses;

(4) Include appropriate analyses conducted by RECOVER;

(5) Contain appropriate NEPA documentation to supplement the Programmatic Environmental Impact Statement included in the ''Final Integrated Feasibility Report and Programmatic Environmental Impact Statement'' dated April 1, 1999; and

(6) Include coordination with the U.S. Fish and Wildlife Service, the National Marine Fisheries Service, the Florida Fish and Wildlife Coordination Commission, and other appropriate agencies in the preparation of the Comprehensive Plan Modification Report, as required by applicable law.

(b) *Review and approval of Comprehensive Plan Modification Report.* (1) The Corps of Engineers and the South Florida Water Management District shall provide opportunities for review and comment by the public on the draft Comprehensive Plan Modification Report and NEPA document, in accordance with applicable law.

(2) Upon approval of the Comprehensive Plan Modification Report by the Division Engineer and the non-Federal sponsor, the Division Engineer shall issue a public notice announcing completion of the Comprehensive Plan Modification Report based upon:

(i) His/her endorsement of the findings and recommendations of the District Engineer and the non-Federal sponsor; and

(ii) His/her assessment that the report is in accord with current policy. The notice shall indicate that the report has been submitted for Washington level review.

(3) Headquarters, US Army Corps of Engineers shall coordinate the Washington level review in accordance with applicable policies and regulations of the Corps of Engineers. Headquarters, US Army Corps of Engineers shall administer the 30-day state and agency review of the Comprehensive Plan Modification Report as required by law.

(4) After completion of the policy review, The Chief of Engineers shall transmit the Chief of Engineers Report to the Assistant Secretary of the Army for Civil Works for review.

(5) Upon approval, the Assistant Secretary of the Army for Civil Works shall transmit the Comprehensive Plan Modification Report to Congress.

(6) As appropriate, the non-Federal sponsor may use the Comprehensive Plan Modification Report as the basis for obtaining approval under applicable Florida law.

(c) *Minor changes to the Plan.* The Plan requires a process for adaptive management and incorporation of new information into the Plan. As a result of this process, each Project Implementation Report may make minor adjustments in the Plan. It is not the intent of this section to require a continual cycle of report writing for minor changes. Instead, the intent of this section is to develop a Comprehensive Plan Modification Report for major changes to the Plan comparable to those that would require a supplement to the programmatic Environmental Impact Statement. The Corps of Engineers and South Florida Water Management District may, in their discretion, elect to prepare a Comprehensive Plan Modification Report for other changes.

§ 385.33 Revisions to models and analytical tools.

(a) In carrying out their responsibilities for implementing the Comprehensive Everglades Restoration Plan and this part, the Corps of Engineers, the South Florida Water Management District, and other non-Federal sponsors shall rely on the best available science including models and other analytical tools for conducting analyses for the planning, design, construction, operation, and assessment of projects. The selection of models and analytical tools shall be done in consultation with the Department of the Interior, the Miccosukee Tribe of Indians of Florida, the Seminole Tribe of Florida, the Environmental Protection Agency, the Department of Commerce, the Florida Department of Environmental Protection, and other Federal, State, and local agencies.

(b) The Corps of Engineers, the South Florida Water Management District, and other non-Federal sponsors may, in consultation with the Department of the Interior, the Miccosukee Tribe of Indians of Florida, the Seminole Tribe of Florida, the Environmental Protection Agency, the Department of Commerce, the Florida Department of Environmental Protection, and other Federal, State, and local agencies, periodically revise models and analytical tools or develop new models and analytical tools as needed. As necessary, RECOVER shall review the adequacy of system-wide simulation models and analytical tools used in the evaluation and assessment of projects, and shall make recommendations for improvements in models and analytical tools required for the evaluation and assessment tasks.

(c) The Corps of Engineers and the South Florida Water Management District shall determine on a case-by-case basis what documentation is appropriate for revisions to models and analytic tools, depending on the significance of the changes and their impacts to the Plan. Such changes may be treated as Minor Changes to the Plan, in accordance with § 385.32(c) where appropriate.

§ 385.34 Changes to the Plan.

(a) The Plan shall be updated to incorporate approved changes to the Plan resulting from:

(1) Approval by the Secretary of a project to be implemented pursuant to § 385.13;

(2) Authorization of projects by Congress;

(3) Comprehensive Plan Modification Reports approved by Congress; or

(4) Other changes authorized by Congress.

(b) The Corps of Engineers and the South Florida Water Management District shall periodically prepare a document for dissemination to the public that describes:

(1) The components of the Plan including any approved changes to the Plan;

(2) The estimated cost of the Plan including any approved changes to the Plan;

(3) A water budget for the Plan; and

(4) The water that has been reserved or allocated for the natural system under State law for the Plan.

(c) The Corps of Engineers shall provide annually to the Office of Management and Budget an updated estimate of total CERP cost, the costs of individual project components, and an explanation of any changes in these estimates from the initial estimates contained in the ''Final Integrated Feasibility Report and Programmatic Environmental Impact Statement,'' dated April 1, 1999.

Subpart E—Ensuring Protection of the Natural System and Water Availability Consistent With the Goals and Purposes of the Plan

§ 385.35 Achievement of the benefits of the Plan.

(a) *Pre-CERP baseline water availability.* (1) Not later than June 30, 2003, the Corps of Engineers and the South Florida Water Management District shall, in consultation with the Department of the Interior, the Miccosukee Tribe of Indians of Florida, the Seminole Tribe of Florida, the Environmental Protection Agency, the Department of Commerce, the Florida Department of Environmental Protection, and other Federal, State, and local agencies, develop the pre-CERP baseline to determine the quantity, quality, timing, and distribution of water delivered by the existing Central

and Southern Florida Project prior to the date of enactment of section 601 of WRDA 2000. In developing the pre-CERP baseline, the Corps of Engineers and the South Florida Water Management District shall use a method that is consistent with the guidance memorandum approved in accordance with paragraph (b)(2) of this section.

(2) Concurrence by the Secretary of the Interior and the Governor shall be required on the proposed pre-CERP baseline. Within 180 days from the development of the pre-CERP baseline, or December 31, 2003, whichever is sooner, or such shorter period that the Secretary of the Interior and the Governor may agree to, the Secretary of the Interior and the Governor may provide the Secretary with a written statement of concurrence or nonconcurrence with the proposed pre-CERP baseline. A failure to provide a written statement of concurrence or nonconcurrence within such time frame shall be deemed as meeting the concurrency requirements of this section. Any nonconcurrency statement shall specifically detail the reason or reasons for the non-concurrence. The Corps of Engineers and the South Florida Water Management District shall give good faith consideration to any nonconcurrency statement, and take the reason or reasons for the nonconcurrence into account in the final decision to determine the pre-CERP baseline.

(3) In preparing a Project Implementation Report, the Corps of Engineers and the South Florida Water Management District shall determine whether the pre-CERP baseline quantity of water of comparable quality is still available. The Corps of Engineers and the non-Federal sponsor shall consider any change in availability of pre-CERP baseline water and previously reserved water in identifying the quantity, timing, and distribution of water to be made available for the natural system by a project component in preparing the Project Implementation Report. The Project Implementation Report shall consider: whether additional quantity, timing, and distribution of water should be made available by subsequent projects; whether improvements in water quality are needed in order to ensure that water delivered to the natural system meets applicable water quality standards; whether to recommend preparation of a Comprehensive Plan Modification Report as described in § 385.32; and whether to recommend that the State of Florida and its agencies re-examine the reservation or allocation of water made pursuant to State law in order to provide for restoration of the natural system consistent with the Plan. In preparing a Project Implementation Report, the concurrence provisions of paragraph (a)(2) of this section shall not apply to a determination of whether the pre-CERP baseline is still available.

(b) *Identification of water to be reserved or allocated for the natural system in the Project Implementation Report.* (1) Each Project Implementation Report shall take into account the pre-CERP baseline water and previously reserved water in identifying the appropriate quantity, timing, and distribution of water dedicated and managed for the natural system, determining whether improvements in water quality are necessary to ensure that water delivered to the natural system meets applicable water quality standards; and identifying the amount of water for the natural system necessary to implement, under State law, the provisions of section 601(h)(4)(A)(iii)(V) of WRDA 2000.

(2) Section 601(h)(3)(C)(i)(I) of WRDA 2000 requires the programmatic regulations in this part to establish a process for development of Project Implementation Reports, Project Cooperation Agreements, and Operating Manuals that ensure that the goals and objectives of the Plan are achieved. Section 601(h)(4)(A)(iii)(IV) of WRDA 2000 provides that Project Implementation Reports shall identify the appropriate quantity, timing, and distribution of water dedicated and managed for the natural system. Section 601(h)(4)(A)(iii)(V) of WRDA 2000 provides that Project Implementation Reports shall identify the amount of water to be reserved or allocated for the natural system necessary to implement, under State law, the provisions of section 601(h)(4)(A)(iii)(IV) and (VI) of WRDA 2000. To implement these provisions and § 385.5, the Corps of Engineers and the South Florida Water Management District shall, with the concurrence of the Secretary of the Interior and the Governor, develop a guidance memorandum for use of the Corps of Engineers and the non-federal sponsor. The guidance memorandum shall provide a process to be used in the preparation of Project Implementation Reports for identifying the appropriate quantity, timing, and distribution of water dedicated and managed for the natural system; determining whether improvements in water quality are necessary to ensure that water delivered to the natural system meets applicable water quality standards; and identifying the amount of water for the natural system necessary to implement, under State law, the provisions of section 601(h)(4)(A)(iii) of WRDA 2000.

(i) The guidance memorandum shall generally be based on a system-wide analysis that adds the project recommended in the Project Implementation Report to the projects of the Plan for which Project Implementation Reports have already been implemented and may express the quantity, timing and distribution of water in stage duration curves; exceedance frequency curves; quantities available in average, wet, and dry years; or any other method which is based on the best available science. The guidance memorandum shall also provide for projects that are hydrologically separate from the rest of the system. The guidance memorandum also shall address procedures for determining whether improvements in water quality are necessary to ensure that water delivered to the natural system meets applicable water quality standards. These procedures shall ensure that any features to improve water quality are implemented in a manner consistent with the cost sharing provisions of the Water Resources Development Acts of 1996 and 2000.

(ii) The guidance memorandum shall generally take into account the natural fluctuation of water made available in any given year; the objective of restoration of the natural system; the need for protection of existing uses transferred to new sources; contingencies for drought protection; the need to identify the additional quantity, timing, and distribution of water made available by a new project component while maintaining a system-wide perspective on the amount of water made available by the Plan; and the need to determine whether improvements in water quality are necessary to ensure that water delivered to the natural system meets applicable water quality standards.

(iii) Project Implementation Reports approved before the date of promulgation of these regulations or the development of the guidance memorandum may use whatever method that the Corps of Engineers and the non-Federal sponsor deem is reasonable and consistent with the provisions of section 601 of WRDA 2000.

(iv) Nothing in this section is intended to, or shall it be interpreted to, reserve or allocate water or to prescribe the process for reserving or allocating water or for water management under Florida law. Nothing in this section is intended to, nor shall it be interpreted to, prescribe any process of Florida law.

§ 385.36 Elimination or transfer of existing legal sources of water.

(a) Pursuant to the provisions of section 601(h)(5)(A) of WRDA 2000, Project Implementation Reports shall include analyses to determine if existing legal sources of water are to be transferred or eliminated as a result of project implementation. If implementation of the project shall cause a transfer or elimination of existing legal sources of water, then the Project Implementation Report shall include an implementation plan that ensures that such transfer or elimination shall not occur until a new source of water of comparable quantity and quality is available to replace the water to be lost as a result of implementation of the Plan.

(b) In determining if implementation of a project shall cause an elimination or transfer of existing legal sources of water, the Corps of Engineers and the non-Federal sponsor shall include those for:

(1) An agricultural or urban water supply;

(2) Allocation or entitlement to the Seminole Indian Tribe of Florida under section 7 of the Seminole Indian Land Claims Settlement Act of 1987 (25 U.S.C. 1772e);

(3) The Miccosukee Tribe of Indians of Florida;

(4) Water supply for Everglades National Park; or

(5) Water supply for fish and wildlife.

§ 385.37 Flood protection.

(a) *General.* In accordance with section 601 of WRDA 2000, flood protection, consistent with restoration, preservation, and protection of the natural system, is a purpose of the Plan.

(b) *Level of service.* (1) For each Project Implementation Report, the level of service for flood protection that:

(i) Was in existence on the date of enactment of section 601 of WRDA 2000; and

(ii) Is in accordance with applicable law, shall be determined for the area affected by the project.

(2) The Project Implementation Report shall include analyses to demonstrate that the level of service for flood protection in paragraph (b)(1) of this section will not be reduced by implementation of the project.

(c) *Improved and new flood protection benefits.* The overarching objective of the Plan is the restoration, preservation, and protection of the South Florida Ecosystem while providing for other water-related needs of the region, including water supply and flood protection. In preparing the Project Implementation Report, the Corps of Engineers and the non-Federal sponsor may consider opportunities to provide additional flood protection consistent with restoration of the natural system, and the provisions of section 601(f)(2)(B) of WRDA 2000 and other applicable laws.

§ 385.38 Interim goals.

(a) *Agreement.* The Secretary, the Secretary of the Interior, and the Governor shall, by December 31, 2003, and in consultation with the Miccosukee Tribe of Indians of Florida, the Seminole Tribe of Florida, the Environmental Protection Agency, the Department of Commerce, the Florida Department of Environmental Protection, and other Federal, State, and local agencies, and the South Florida Ecosystem Restoration Task Force, execute an Interim Goals Agreement establishing interim goals to facilitate inter-agency planning, monitoring and assessment so as to achieve the overarching objectives of the Comprehensive Everglades Restoration Plan and to ensure the means by which the restoration success of the Plan may be evaluated, and ultimately reported to the Congress pursuant to § 385.40 throughout the implementation process.

(b) *Purpose.* (1) Interim goals are targets by which the restoration success of the Plan may be evaluated at specific points by agency managers, the State, and Congress throughout the overall planning and implementation process. In addition, interim goals will facilitate adaptive management and allow the Corps of Engineers and its non-federal sponsors opportunities to make adjustments if actual project performance is less than anticipated, including recommending any changes to the Plan. Interim goals are not intended to be standards or schedules enforceable in court.

(2) To ensure flexibility in implementing the Plan over the next several decades, and to ensure that interim goals may reflect changed circumstances or new information resulting from adaptive management, the interim goals may be modified, consistent with the processes set forth in paragraph (c) of this section, to reflect new information resulting from changed or unforeseen circumstances, new scientific or technical information, new or updated models, or information developed through the adaptive assessment principles contained in the Plan, or future authorized changes to the Plan.

(3) The Corps of Engineers and the South Florida Water Management District and other non-Federal sponsors shall sequence and schedule projects as necessary to achieve the interim goals and the targets for achieving progress towards other water-related needs of the region provided for in the Plan, to the extent practical given funding, technical, or other constraints.

(4) If the interim goals have not been met or are unlikely to be met, then the Corps of Engineers and the South Florida Water Management District shall:

(i) Document why the interim goals have not been met or are unlikely to be met and either

(ii) Develop a plan of action that achieves the interim goals as soon as practical consistent with the other objectives of the Plan, and initiate adaptive management actions pursuant to § 385.31(c) based on the plan of action; or

(iii) Recommend changes to the interim goals in accordance with paragraph (b)(2) of this section.

(c) *Process for establishing interim goals.* (1) In developing proposed goals for inclusion in the Interim Goals Agreement, the Secretary, the Secretary of the Interior, and the Governor, shall be provided with, and consider, the technical recommendations of RECOVER and any modifications to those recommendations by the Corps of Engineers or the South Florida Water Management District. These recommendations shall be provided no later than June 30, 2003. Thereafter, the Secretary, the Secretary of the Interior, and the Governor shall provide a notice of availability of the proposed agreement to the public in the **Federal Register**, seek public comments, and consult with the Miccosukee Tribe of Indians of Florida, the Seminole Tribe of Florida, the Environmental Protection Agency, the Department of the Commerce, the Florida Department of Environmental Protection, and other Federal, State, and local agencies, and the South Florida Ecosystem Restoration Task Force. After considering comments of the public and consulted agencies on the proposed agreement, and incorporating any suggestions that are appropriate and consistent with the goals and purposes of the Plan, the Secretary, the Secretary of the Interior, and the Governor, shall execute the final agreement, and provide a notice of availability to the public in the **Federal Register** by no later than December 31, 2003.

(2) In developing its recommendations for interim goals, RECOVER shall use the principles in paragraph (d) of this section.

(3) The Secretary, Secretary of the Interior, and the Governor shall review the proposed interim goals agreement at

a minimum every five years beginning October 1, 2005, to determine if the Interim Goals should be revised. Thereafter, the Secretary, the Secretary of the Interior, and the Governor shall revise the interim goals as appropriate and execute a new agreement every five years. However, they may revise interim goals whenever appropriate as new information becomes available. Any revisions to interim goals shall be adopted consistent with the process established pursuant to this part.

(d) *Principles for developing interim goals.* (1) RECOVER, using best available science and information, shall recommend a set of interim goals for implementation of CERP, consisting of regional hydrologic performance targets, improvements in water quality, and anticipated ecological responses for areas such as, Lake Okeechobee, the Kissimmee River Region, the Water Conservation Areas, the Lower East Coast, the Upper East Coast, the Everglades Agricultural Area, and the Caloosahatchee River, Everglades National Park, Big Cypress National Preserve, and the estuaries. These interim goals shall reflect the incremental accomplishment of the expected performance level of the Plan, and will identify improvements in quantity, quality, timing and distribution of water in five-year increments beginning in 2005. The interim goals shall be predicted by appropriate models and tools and shall provide a quantitative basis for evaluating the restoration success of the Plan during the period of implementation. The expected performance level of the Plan is generally represented by the output of the model run of D–13R as described in the ''Final Integrated Feasibility Report and Programmatic Environmental Impact Statement'' dated April 1, 1999, as modified by section 601 of WRDA 2000, or any subsequent modification authorized in law. In developing the interim goals for the five-year increments, RECOVER shall use the Master Implementation Sequencing Plan as the basis for predicting the increments. RECOVER may recommend additional interim goals for implementation of CERP in addition to those initially developed and may propose revisions to the initial set of hydrologic interim goals as new information is gained through adaptive management.

(2) In developing its recommendations for interim goals, RECOVER shall consider indicators including, but not limited to:

(i) Hydrologic indicators, including:

(A) The amount of water, in addition to the pre-CERP baseline and assumptions regarding without project conditions, which will be available to the natural system;

(B) Hydroperiod targets in designated sample areas throughout the Everglades;

(C) The changes in the seasonal and annual overland flow volumes in the Everglades which will be available to the natural system;

(D) The frequency of extreme high and low water levels in Lake Okeechobee;

(E) The frequency of meeting salinity envelopes for the St. Lucie and Caloosahatchee estuaries; and

(ii) Improvement in water quality; and

(iii) Ecological responses, including:

(A) Increases in total spatial extent of restored wetlands;

(B) Improvement in habitat quality; and

(C) Improvement in native plant and animal abundance.

(3) In developing the interim goals based upon water quality and expected ecological responses, the Secretary of the Army, the Secretary of the Interior, and the Governor shall take into consideration the extent to which actions undertaken by federal, state, tribal, and other entities under programs not within the scope of this part may effect achievement of the goals.

§ 385.39 Evaluating Progress on achieving other water-related needs of the region Provided for in the Plan.

(a) *Purpose.* (1) The overarching objective of the Plan is the restoration, preservation, and protection of the South Florida ecosystem while providing for other water-related needs of the region, including water supply and flood protection. Progress towards providing for these other water-related needs shall also be evaluated.

(2) As provided for in paragraph (b) of this section, the Corps of Engineers and the South Florida Water Management District shall establish targets for evaluating progress towards achieving other water-related needs of the region, including water supply and flood protection, throughout the implementation process.

(3) The Corps of Engineers and the South Florida Water Management District and other non-Federal sponsors shall sequence and schedule projects as necessary to achieve the targets for other water-related needs of the region provided for in the Plan, consistent with the interim goals established pursuant to § 385.38, to the extent practical given funding, technical, or other constraints.

(4) If the targets for evaluating progress towards achieving other water-related needs of the region have not been met or are unlikely to be met, then the Corps of Engineers and the South Florida Water Management District shall:

(i) Document why the targets have not been met or are unlikely to be met; and either

(ii) Develop a plan of action that achieves the targets as soon as practical consistent with the purposes of the Plan and initiate adaptive management actions pursuant to § 385.31(c) based on the plan of action; or

(iii) Adopt changes to the targets in accordance with paragraph (b)(3) of this section.

(b) *Process for establishing targets.* (1) Not later than June 30, 2003 RECOVER shall develop recommendations on targets to evaluate progress on achieving the other water-related needs of the region, for consideration by the Corps of Engineers and the South Florida Water Management District, in consultation with the Department of the Interior, the Miccosukee Tribe of Indians of Florida, the Seminole Tribe of Florida, the Environmental Protection Agency, the Department of Commerce, the Florida Department of Environmental Protection, and other Federal, State, and local agencies. The Corps of Engineers and the South Florida Water Management District shall also consult with the South Florida Ecosystem Restoration Task Force in establishing targets for evaluating progress towards achieving other water-related needs of the region provided for in the Plan. These targets shall be established by the Corps of Engineers and the South Florida Water Management District by December 30, 2003. Targets for evaluating progress towards achieving other water-related needs of the region provided for in the Plan are intended to facilitate inter-agency planning, monitoring, and assessment throughout the implementation process and are not intended to be standards or schedules enforceable in court.

(2) In accordance with § 385.18, the Corps of Engineers and the South Florida Water Management District shall provide the public with opportunities to review and comment on proposed targets.

(3) The Corps of Engineers and the South Florida Water Management District shall review the targets for evaluating progress towards achieving the other water-related needs of the region under the Plan at a minimum every five years beginning in 2005, to determine if they should be revised, and revise them as appropriate. However, they may revise the targets for achieving the other water-related needs of the

region whenever appropriate as new information becomes available.

(c) *Principles for evaluating progress.* (1) RECOVER, using best available science and information, shall recommend a set of targets for evaluating progress on achieving other water-related needs of the region provided for in the Plan. These targets shall reflect the incremental accomplishment of the expected performance level of the Plan, and will identify improvements in quantity, quality, timing and distribution of water in five-year increments beginning in 2005. The targets shall be predicted by appropriate models and tools and shall provide a quantitative basis for evaluating progress on achieving other water-related needs of the region provided for in the Plan during the period of implementation. The expected performance level of the Plan is generally represented by the output of the model run of D–13R as described in the ''Final Integrated Feasibility Report and Programmatic Environmental Impact Statement'' dated April 1, 1999, as modified by section 601 of WRDA 2000, or any subsequent modification authorized in law. In developing the targets for the five-year increments, RECOVER shall use the Master Implementation Sequencing Plan as the basis for predicting the increments. RECOVER may recommend additional targets for implementation of CERP in addition to those initially developed and may propose revisions to the initial set of hydrologic targets as new information is gained through adaptive management.

(2) In developing its recommendations for targets, RECOVER shall consider the following indicators, but not limited to:

(i) The frequency of water restrictions in the Lower East Coast Service Areas at each time increment.

(ii) The frequency of water restrictions in the Lake Okeechobee Service Areas at each time increment.

(iii) The frequency of meeting salt-water intrusion protection criteria for the Lower East Coast Service Area at each time increment.

§ 385.40 Reports to Congress.

(a) Beginning on October 1, 2005 and periodically thereafter until October 1, 2036, the Secretary and the Secretary of the Interior shall jointly submit to Congress a report on the implementation of the Plan as required by section 601(l) of WRDA 2000. Such reports shall be completed not less often than every 5 years.

(b) This report shall be prepared in consultation with the Environmental Protection Agency, the Department of Commerce, the Seminole Tribe of Florida, the Miccosukee Tribe of Indians of Florida, the Florida Department of Environmental Protection, the South Florida Water Management District, and other Federal, State, and local agencies and the South Florida Ecosystem Restoration Task Force.

(c) Such reports shall include a description of planning, design, and construction work completed, the amount of funds expended during the period covered by the report, including a detailed analysis of the funds expended for adaptive management, and the work anticipated over the next 5-year period and updated estimates of total CERP cost and individual component costs and an explanation of any changes from the initial estimates contained in the ''Final Integrated Feasibility Report and Programmatic Environmental Impact Statement,'' dated April 1, 1999.

(d) In addition, each report shall include:

(1) The determination of each Secretary, and the Administrator of the Environmental Protection Agency, concerning the benefits to the natural system and the human environment achieved as of the date of the report and whether the completed projects of the Plan are being operated in a manner that is consistent with the requirements of section 601(h) of WRDA 2000;

(2) Progress towards the interim goals established in accordance with § 385.38;

(3) Progress towards achieving targets for other water-related needs of the region provided for in the Plan established pursuant § 385.39; and

(4) A review of the activities performed by the Secretary pursuant to section 601(k) of WRDA 2000 and § 385.18 and § 385.19 as they relate to socially and economically disadvantaged individuals and individuals with limited English proficiency.

(e) The discussion on interim goals in the periodic reports shall include:

(1) A discussion of the performance that was projected to be achieved in the last periodic report to Congress;

(2) A discussion of the steps taken to achieve the interim goals since the last periodic Report to Congress and the actual performance of the Plan during this period;

(3) If performance did not meet the interim goals, a discussion of the reasons for such shortfall;

(4) Recommendations for improving performance; and

(5) The interim goals to be achieved in the next five years, including any revisions to the interim goals, reflecting the work to be accomplished during the next five years, along with a discussion of steps to be undertaken to achieve the interim goals.

(f) In preparing the report to Congress required pursuant to this section, the Corps of Engineers and the Department of the Interior shall provide an opportunity for public review and comment, in accordance with § 385.18.

Appendix A to Part 385—Illustrations to Part 385

BILLING CODE 3710–92–P

Project Development Process

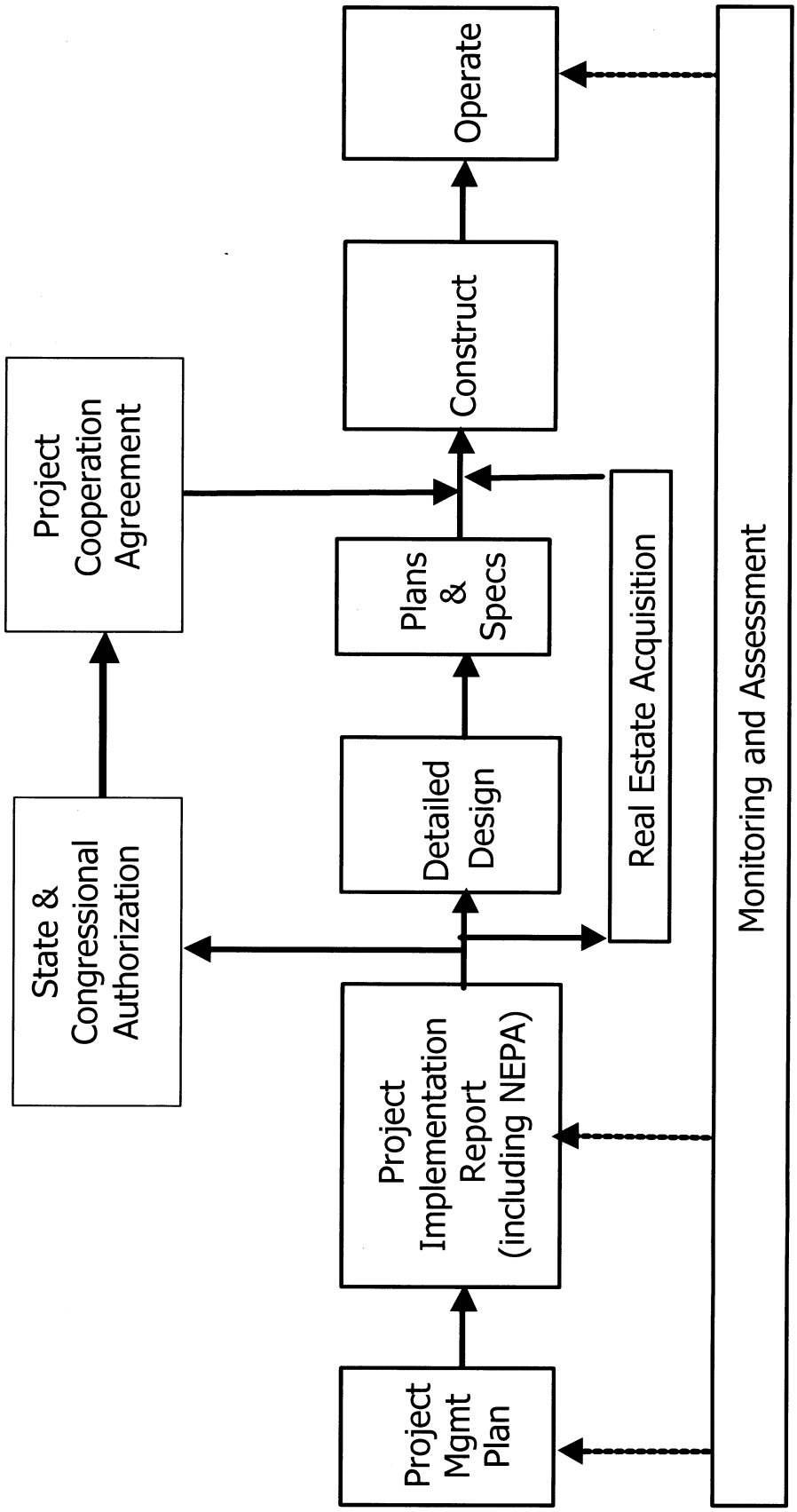

Figure 1

Appendix A

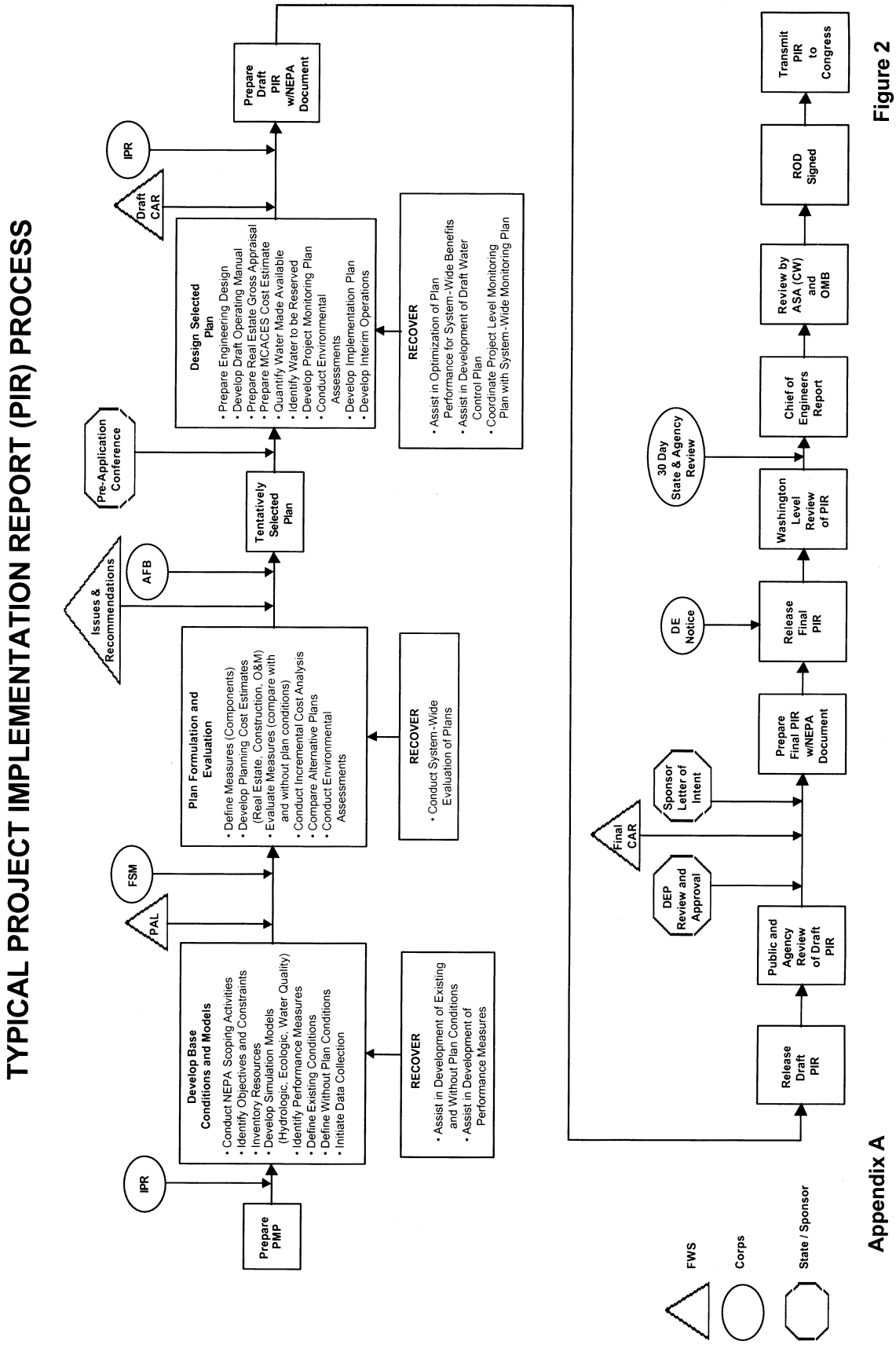

Figure 2

Appendix A

[FR Doc. 02–19240 Filed 8–1–02; 8:45 am]

BILLING CODE 3710–92–C

Federal Register

Friday,
August 2, 2002

Part IV

Office of Science and Technology Policy

Proposed Federal Actions To Update Field Test Requirements for Biotechnology Derived Plants and To Establish Early Food Safety Assessments for New Proteins Produced by Such Plants; Notice

OFFICE OF SCIENCE AND TECHNOLOGY POLICY

Proposed Federal Actions To Update Field Test Requirements for Biotechnology Derived Plants and To Establish Early Food Safety Assessments for New Proteins Produced by Such Plants

AGENCY: Office of Science and Technology Policy.

ACTION: Request public comments on proposed federal actions.

SUMMARY: These proposed federal actions are put forward to address regulatory issues associated with the expanding development and use of biotechnology-derived crops. Rapid developments in genomics are resulting in dramatic changes in the way new plant varieties are developed and commercialized. Scientific advances are expected to accelerate significantly over the next decade, leading to the development and commercialization of a greater number and diversity of biotechnology-derived crops. Consistent with the Coordinated Framework for the Regulation of Biotechnology Products (51 FR 23302, June 26,1986), the Office of Science and Technology Policy (OSTP), working with Departments of Agriculture (USDA) and Health and Human Services (HHS) and the Environmental Protection Agency (EPA), is proposing these coordinated actions to update field testing requirements of biotechnology-derived food and feed crop plants and to establish early food safety assessments for new proteins produced by such plants.

DATES: The Office of Science and Technology Policy welcomes comments on the proposed federal actions. To be assured consideration by USDA, HHS, and EPA, comments must be postmarked no later than September 30, 2002.

ADDRESSES: Comments on this notice should be sent to OSTP by e-mail at *comments@ostp.eop.gov* or by FAX at 202–456–6027.

Background

The use of biotechnology-derived crops in the United States has increased markedly over the past decade. In 1994, approximately 7,000 acres were planted under 593 USDA field-test authorizations, compared to 57,000 acres under 1,117 authorizations in 2001. The first biotechnology-derived crops were commercialized in 1996 and, in 2001, approximately 88 million acres were planted in the United States and 130 million acres were planted worldwide (ISAAA). While the increases are most dramatic in the United States, other nations (*e.g.,* Canada, Argentina, China) are also experiencing significant growth in the development and use of biotechnology-derived crops.

Rapid developments in genomics (plant, animal, and microbial) are making this expansion possible. The genomes of the model plant Arabidopsis and rice have been sequenced. Such scientific advances are expected to accelerate significantly over the next decade, leading to the development and commercialization of a greater number and diversity of biotechnology-derived crops. In addition to developing plants expressing traits for improved agronomic properties (*e.g.,* disease and pest resistance and drought and herbicide tolerance), scientists are adding traits for the benefit of the consumer (*e.g.,* enhanced nutrition, other health benefits, and prolonged shelf-life), and traits that produce substances not intended for consumption through food or feed (*e.g.,* industrial enzymes and pharmaceuticals).

While the expansion of biotechnology-derived crops is expected to result in net benefits to producers, consumers, and the environment, the federal government must maintain appropriate regulatory oversight, adjusting its requirements based on scientific developments and industry trends. For example, the National Research Council's reports ''Environmental Effects of Transgenic Plants'' (NRC, 2002) and ''Genetically Modified Pest-Protected Plants: Science and Regulation'' (NRC, 2000) make several recommendations to strengthen various aspects of federal oversight of agricultural biotechnology.

The overall federal regulatory structure for biotechnology products (Coordinated Framework) was adopted by federal agencies in 1986 (51 FR 23302, June 26, 1986). The Coordinated Framework provides a regulatory approach that is intended to ensure the safety of biotechnology research and products, using existing statutory authority and building upon agency experience with agricultural, pharmaceutical, industrial, and other products developed through traditional genetic modification techniques. The oversight of biotechnology-derived plants rests with the USDA's Animal and Plant Health Inspection Service (APHIS), the HHS' Food and Drug Administration (FDA), and the EPA. The Coordinated Framework anticipated that agencies might need to develop specific regulations or guidelines under existing statutory authority. The Framework also anticipated further elaboration of federal biotechnology policy consistent with scientific advances and product development.

Federal regulatory agencies recognized that the expansion in agricultural biotechnology increasingly will put pressure on seed production and commodity handling systems to ensure applicable seed, commodity, and food and feed safety standards are met. Those plants that have already been reviewed by federal regulatory agencies and found safe are not of concern. While existing field-testing requirements have been appropriate for current agricultural biotechnology development and commercialization activities, federal regulations must anticipate future activities. As the number and diversity of field tests increase, the likelihood that cross-pollination due to pollen drift from field tests to commercial fields and commingling of seeds produced under field tests with commercial seeds or grain may also increase. This could result in intermittent, low-levels of biotechnology-derived genes, and gene products occurring in commerce that have not gone through all applicable regulatory reviews.

Therefore, in anticipation of the expansion of the development and commercialization of agricultural biotechnology, these proposed federal actions would establish a coordinated regulatory approach to update field testing requirements of biotechnology-derived plants and to establish early food safety assessments for new proteins produced by such plants that are intended for food or feed use. The measures proposed in this Notice address only those biotechnology-derived crop plants intended for food and feed use. These measures are aimed at preventing low levels of biotechnology-derived genes and gene products from being found in commercial seed, commodities, and processed food and feed until appropriate safety standards can be met. Actions addressing other regulatory aspects of biotechnology-derived crop plants may be proposed in the future.

Proposed Federal Actions

These proposals are aimed at further reducing in commercial seed lots, bulk commodities, and processed food and feed the likelihood of the occurrence of intermittent, low levels of biotechnology-derived genes and gene products from crops under development for food or feed use until all appropriate safety standards have been met. These actions are part of the government's continuing protection of public health

and the environment and efforts to enhance public confidence in the regulatory oversight of biotechnology-derived food crops and foods/feeds derived from such crops.

These proposals would be implemented through the coordinated actions of FDA, USDA, and EPA. In developing these proposals, the U.S. government has relied on the following three principles:

- The level of confinement under which a field test of a biotechnology-derived plant is conducted should be consistent with the level of environmental, human, and animal health risk associated with the introduced protein and trait.
- If a trait or protein presents an unacceptable risk or the risks cannot be determined adequately, field test confinement requirements would be rigorous to restrict out-crossing and commingling of seed and the occurrence at any level of biotechnology-derived genes and gene products from these field tests would be prohibited in commercial seed, commodities, and processed food and feed.
- Even if a trait or protein does not present an unacceptable risk to the environment or public health, field test requirements should still minimize the occurrence of out-crossing and commingling of seed from these field tests, but intermittent, low levels of biotechnology-derived genes and gene products from such field tests could be found acceptable based on data and information indicating the newly introduced traits and proteins meet the applicable regulatory standards.

FDA

FDA would publish for comment draft guidance on procedures to address the possible intermittent, low level presence in food and feed of new non-pesticidal proteins from biotechnology-derived crops under development for food or feed use, but that have not gone through FDA's premarket consultation process. The guidance would focus on proteins new to such plants, because FDA believes that at the low levels expected from such material, any food or feed safety concerns would be limited to the potential that a new protein could cause an allergic reaction in some people or could be a toxin. Through this guidance, FDA would encourage sponsors (domestic and foreign) to submit protein safety information once field testing was about to reach a stage of development such that there could be concerns that new non-pesticidal proteins produced in the field-tested plants might be found in commercial seed, commodities, or food/feed.

For this kind of low-level intermittent exposure, FDA does not believe there is a need to evaluate potential unintended compositional changes in food that might be associated with separate transformation events. Consequently, the agency would propose to establish procedures under which developers could provide FDA with food/feed safety information on any non-pesticidal protein engineered into a food/feed crop when that protein has not previously been evaluated by FDA and is new to the food crop into which it was engineered. FDA would principally be interested in looking at data and other information addressing potential toxicity and allergenicity. For developers who have intentionally altered the composition of the food or feed, FDA would encourage them to consult with the agency about whether the presence in food/feed of such material at low and intermittent levels would raise any potential safety issues.

Since this guidance would be focusing only on the new protein and its potential allergenicity and toxicity, FDA would not expect multiple submissions for the same protein from the same source gene. FDA also would not expect submissions for proteins moved within the same species, as such movement would not raise new toxicity or allergenicity issues for the food.

Consistent with procedures the agency has implemented or has proposed to implement for its voluntary premarket consultation process and proposed mandatory premarket notification process for foods/feeds from bioengineered plants, the agency would propose in the draft guidance to provide developers with a written response at the conclusion of its evaluation, and to make the submission and FDA's response available through its web site. FDA would propose to maintain a list on its website, consistent with confidentiality requirements, of all proteins it had evaluated and considered acceptable (or unacceptable) through this procedure. FDA would still expect developers to conduct a complete consultation with FDA prior to marketing food or feed from the plant, consistent with current practices.

EPA

EPA would rely on its existing processes to address residues of pesticidal proteins in food, and would publish for comment guidance for individuals and organizations conducting field-testing on plant-incorporated protectants (PIPs). PIPs are pesticidal substances and the genetic material necessary to produce the substance, when produced and used in living plants, and are regulated as pesticides under the Federal Insecticide, Fungicide, and Rodenticide Act (FIFRA) and the Federal Food, Drug and Cosmetic Act (FFDCA). This guidance would address broadly two issues: (1) The process for obtaining EPA review of the safety of the presence of low-level intermittent residues of PIPs in food and (2) guidance on containment controls that a person should employ when conducting experimental field trials, in order to minimize the potential occurrence of unapproved PIPs in food.

EPA would encourage developers to seek approval for residues of PIPs in food very early in the research and development process, if there is a likelihood for the pesticide to be in food through gene flow. EPA decisions about the safety in food of low levels of PIPs would be made under the provisions of section 408 of the FFDCA, which requires that EPA determine whether there is a reasonable certainty of no harm from aggregate exposure to the pesticide. EPA would discuss its legal authority and would explain that, like all safety determinations for PIPs, EPA would need to issue a rule under FFDCA permitting the residues of the PIP to be present in food, even if the PIP is only found at low levels. Such rules typically would last only as long as necessary to allow any food that might contain residues to pass through the food distribution chain. A person seeking an approval under the FFDCA to allow the PIP residue to be present in food would need to submit PIP-specific information sufficient to establish the PIP's safety. In general, EPA would expect the same types and amount of information as FDA, with the focus on product identity and potential allergenicity and toxicity. In a few areas, however, EPA would likely need some additional data because the products regulated by EPA have a different character—they are intended to display pesticidal properties—from the products that FDA reviews.

In addition, EPA would discuss the regulation of PIPs under FIFRA, focusing on the provisions which require a person to obtain an experimental use permit (EUP) prior to conducting field research with a pesticide. EPA would provide guidance on the circumstances under which the Agency would ''reasonably anticipate'' that PIP residues would be present in food, and thus would presumptively require an EUP. EPA would also describe the containment controls that would be appropriate for experimental field trials to minimize the potential for gene-flow to commercial seed production fields or commercial

commodity production fields, either through pollen drift or other avenues of transfer of genetic material, such that those responsible for the field trials would not anticipate residues. EPA would coordinate its approach to containment controls for field testing with other federal agencies.

USDA

USDA has strengthened field-testing controls for permits on those bioengineered traits that are not intended for commodity uses, such as pharmaceuticals, veterinary biologics, or certain industrial products. This has been accomplished by requiring specific additional safeguards as a condition of permits for confined release into the environment of such products. The potential for exposure would be mitigated through additional appropriate safeguards. These safeguards may include overall confinement procedures, performance standards, and monitoring/auditing practices for ensuring that out-crossing or commingling of non-commodity appropriate traits with seeds and commodities are prevented.

USDA would also propose, under its biotechnology regulations in 7 CFR part 340, to amend its regulations to provide criteria under which regulated articles may be allowable in commercial seed and commodities, if they pose no unacceptable environmental risk. Criteria would be announced as part of an overall updating of 7 CFR part 340, incorporating APHIS' new authorities under the Plant Protection Act and in consideration of recommendations given to USDA in the National Research Council (February 2002) report ''Environmental Effects of Transgenic Plants: The Scope and Adequacy of Regulation.''

USDA will also continue and expand a critical emphasis on transparency of the regulatory process and on the use of broad internal and external scientific expertise and review as the foundation for decision-making.

Barbara Ann Ferguson,

Assistant Director for Budget and Administration, Office of Science and Technology Policy.

[FR Doc. 02–19746 Filed 8–1–02; 11:20 am]

BILLING CODE 3170–01–P

Reader Aids

Federal Register

Vol. 67, No. 149

Friday, August 2, 2002

CUSTOMER SERVICE AND INFORMATION

Federal Register/Code of Federal Regulations	
General Information, indexes and other finding aids	**202–523–5227**
Laws	**523–5227**
Presidential Documents	
Executive orders and proclamations	**523–5227**
The United States Government Manual	**523–5227**
Other Services	
Electronic and on-line services (voice)	**523–3447**
Privacy Act Compilation	**523–3187**
Public Laws Update Service (numbers, dates, etc.)	**523–6641**
TTY for the deaf-and-hard-of-hearing	**523–5229**

ELECTRONIC RESEARCH

World Wide Web

Full text of the daily Federal Register, CFR and other publications is located at: **http://www.access.gpo.gov/nara**

Federal Register information and research tools, including Public Inspection List, indexes, and links to GPO Access are located at: **http://www.nara.gov/fedreg**

E-mail

FEDREGTOC-L (Federal Register Table of Contents LISTSERV) is an open e-mail service that provides subscribers with a digital form of the Federal Register Table of Contents. The digital form of the Federal Register Table of Contents includes HTML and PDF links to the full text of each document.

To join or leave, go to **http://listserv.access.gpo.gov** and select *Online mailing list archives, FEDREGTOC-L, Join or leave the list (or change settings);* then follow the instructions.

PENS (Public Law Electronic Notification Service) is an e-mail service that notifies subscribers of recently enacted laws.

To subscribe, go to **http://hydra.gsa.gov/archives/publaws-l.html** and select *Join or leave the list* (or change settings); then follow the instructions.

FEDREGTOC-L and **PENS** are mailing lists only. We cannot respond to specific inquiries.

Reference questions. Send questions and comments about the Federal Register system to: **info@fedreg.nara.gov**

The Federal Register staff cannot interpret specific documents or regulations.

FEDERAL REGISTER PAGES AND DATE, AUGUST

49855–50342 1
50343–50580 2

CFR PARTS AFFECTED DURING AUGUST

At the end of each month, the Office of the Federal Register publishes separately a List of CFR Sections Affected (LSA), which lists parts and sections affected by documents published since the revision date of each title.

3 CFR

Executive Orders:
12722 (See Notice of July 30, 2002) 50341
12724 (See Notice of July 30, 2002) 50341
Administrative Orders:
Notices:
Notice of July 30, 2002 50341
Presidential Determinations:
No. 2002–26 of July 17, 2002 50343

5 CFR

532 (2 documents) 49855
2634.....49856
Proposed Rules:
532 (2 documents) 49878, 49879

7 CFR

1160.....49857
Proposed Rules:
701.....49879
1001.....49887

9 CFR

Proposed Rules:
112.....49891
113.....49891

10 CFR

Proposed Rules:
50.....50374
52.....50374

13 CFR

Proposed Rules:
121.....50383

14 CFR

39 .....49858, 49859, 49861, 50345, 50347
Proposed Rules:
39.....50383

15 CFR

774.....50348
902.....50292

17 CFR

Proposed Rules:
230.....50326
240.....50326

22 CFR

41.....50349

26 CFR

1.....49862
301.....49862
Proposed Rules:
1 .....49892, 50386, 50510
31.....50386

33 CFR

117.....50349
165.....50351
Proposed Rules:
334.....50389, 50390
385.....50340

39 CFR

927.....50353

40 CFR

180.....50354
272.....49864
Proposed Rules:
52 (2 documents) 49895, 49897, 50391
272.....49900

42 CFR

405.....49982
412.....49982
413.....49982
485.....49982

44 CFR

65.....50362

46 CFR

Proposed Rules:
221.....50406

50 CFR

216.....49869
622.....50367
648.....50292, 50368
660.....49875
679.....49877

REMINDERS

The items in this list were editorially compiled as an aid to Federal Register users. Inclusion or exclusion from this list has no legal significance.

RULES GOING INTO EFFECT AUGUST 2, 2002

COMMERCE DEPARTMENT
Industry and Security Bureau
Export administration regulations:
Chemical and biological weapons controls; Australia Group; Chemical Weapons Convention; correction; published 8-2-02

COMMERCE DEPARTMENT
National Oceanic and Atmospheric Administration
Fishery conservation and management:
Northeastern United States fisheries—
Summer flounder, scup, and black sea bass; published 8-2-02

ENVIRONMENTAL PROTECTION AGENCY
Pesticides; tolerances in food, animal feeds, and raw agricultural commodities:
Benzene, etc.; published 4-4-02
Fludioxonil; published 8-2-02

POSTAL SERVICE
Procedure:
Finances, deductions, and damages; published 8-2-02

STATE DEPARTMENT
Visas; nonimmigrant documentation:
Visa Waiver Program; correction; published 8-2-02

TRANSPORTATION DEPARTMENT
Federal Aviation Administration
Airworthiness directives:
CFE Co.; published 6-28-02
Empresa Brasileira de Aeronautica S.A. (EMBRAER); published 7-18-02
McDonnell Douglas; published 7-18-02

COMMENTS DUE NEXT WEEK

AGRICULTURE DEPARTMENT
Agricultural Marketing Service
Lamb promotion, research, and information order; comments due by 8-6-02; published 6-7-02 [FR 02-14457]

AGRICULTURE DEPARTMENT
Animal and Plant Health Inspection Service
Interstate transportation of animals and animal products (quarantine):
Tuberculosis in cattle and bison—
State and area classfications; comments due by 8-5-02; published 6-6-02 [FR 02-14197]

COMMERCE DEPARTMENT
National Oceanic and Atmospheric Administration
Endangered and threatened species:
Findings on petitions, etc.—
Loggerhead turtle; comments due by 8-5-02; published 6-4-02 [FR 02-13959]
Fishery conservation and management:
Alaska; fisheries of Exclusive Economic Zone—
Bering Sea and Aleutian Islands and Gulf of Alaska groundfish; Steller sea lion protection measures; correction; comments due by 8-9-02; published 7-10-02 [FR 02-17045]
Gulf of Mexico stone crab; comments due by 8-9-02; published 6-25-02 [FR 02-15995]
Magunuson-Stevens Act provisions—
Domestic fisheries; exempted fishing permit applications; comments due by 8-5-02; published 7-19-02 [FR 02-18265]
Northeastern United States fisheries—
Atlanctic mackerel, squid, and butterfish; comments due by 8-5-02; published 7-5-02 [FR 02-16813]
West Coast States and Western Pacific fisheries—
Pacific whiting; comments due by 8-5-02; published 7-19-02 [FR 02-18262]

DEFENSE DEPARTMENT
Air Force Department
Privacy Act; implementation; comments due by 8-5-02; published 6-4-02 [FR 02-13900]

DEFENSE DEPARTMENT
Federal Acquisition Regulation (FAR):
Federal, State, and local taxes; comments due by 8-5-02; published 6-4-02 [FR 02-13867]
Privacy Act; implementation
National Imagery and Mapping Agency; comments due by 8-5-02; published 6-4-02 [FR 02-13898]

ENVIRONMENTAL PROTECTION AGENCY
Air pollutants, hazardous; national emission standards:
Chromium emissions from hard and decorative chromium electroplating and chromium anodizing tanks; comments due by 8-5-02; published 6-5-02 [FR 02-13805]
Air quality implementation plans; approval and promulgation; various States:
California; comments due by 8-7-02; published 7-8-02 [FR 02-16857]
South Dakota; comments due by 8-9-02; published 7-10-02 [FR 02-17358]
Air quality planning purposes; designation of areas:
Michigan; comments due by 8-9-02; published 7-10-02 [FR 02-17239]
Minnesota; comments due by 8-9-02; published 7-10-02 [FR 02-17242]
Hazardous waste:
Municipal solid waste landfills; research, development, and demonstration permits; comments due by 8-9-02; published 6-10-02 [FR 02-14489]
Superfund program:
CERCLA hazardous substances list; additions and removals—
Typographical errors correction and removal of obsolete language; comments due by 8-8-02; published 7-9-02 [FR 02-16866]
CERLA hazardous substances list; additions and removals—
Correction of typographical errors and removal of obsolete language in regulations on reportable quantities; comments due by 8-8-02; published 7-9-02 [FR 02-16873]
Water pollution control:
National Pollutant Discharge Elimination System—
Cooling water intake structures at Phase II existing facilities; requirements; comments due by 8-7-02; published 6-19-02 [FR 02-15456]

FEDERAL COMMUNICATIONS COMMISSION
Digital television stations; table of assignments:
Texas; comments due by 8-5-02; published 6-18-02 [FR 02-15212]
Radio stations; table of assignments:
Indiana; comments due by 8-5-02; published 6-21-02 [FR 02-15673]

GENERAL SERVICES ADMINISTRATION
Federal Acquisition Regulation (FAR):
Federal, State, and local taxes; comments due by 8-5-02; published 6-4-02 [FR 02-13867]

HEALTH AND HUMAN SERVICES DEPARTMENT
Food and Drug Administration
Food additives:
Food contact substance notification system; comments due by 8-5-02; published 5-21-02 [FR 02-12662]
Human drugs:
Pediculicide products (OTC); amendment of final monograph; comments due by 8-8-02; published 5-10-02 [FR 02-11656]

HOUSING AND URBAN DEVELOPMENT DEPARTMENT
Public and Indian housing:
Indian housing block grant allocation formula; negotiated rulemaking committee; intent to establish; comments due by 8-5-02; published 7-5-02 [FR 02-16766]

INTERIOR DEPARTMENT
Fish and Wildlife Service
Endangered and threatened species:
Critical habitat designations—
Otay tarplant; comments due by 8-9-02; published 7-10-02 [FR 02-17344]

Migratory bird hunting:
Federal Indian reservations, off-reservation trust lands, and ceded lands; comments due by 8-8-02; published 7-29-02 [FR 02-19018]

INTERIOR DEPARTMENT

Reclamation Bureau

Reclamation lands and projects:
Law enforcement authority; comments due by 8-5-02; published 6-4-02 [FR 02-13877]

INTERNATIONAL TRADE COMMISSION

Practice and procedure:
General application rules, safeguard investigations, and antidumping and countervailing duty investigations and reviews; technical corrections, etc.; comments due by 8-5-02; published 6-5-02 [FR 02-13910]

LABOR DEPARTMENT

Programs and activities receiving Federal financial assistance; nondiscrimination based on age; comments due by 8-9-02; published 6-10-02 [FR 02-14458]

NATIONAL AERONAUTICS AND SPACE ADMINISTRATION

Acquisition regulations:
Shipment by Government Bills of Lading; comments due by 8-5-02; published 6-6-02 [FR 02-14161]

Federal Acquisition Regulation (FAR):
Federal, State, and local taxes; comments due by 8-5-02; published 6-4-02 [FR 02-13867]

NATIONAL CREDIT UNION ADMINISTRATION

Credit unions:
Prompt corrective action—
Revisions and adjustments; comments due by 8-5-02; published 6-4-02 [FR 02-13931]

TRANSPORTATION DEPARTMENT

Coast Guard

Pollution:
Salvage and marine firefighting requirements; tank vessels carrying oil; response plans; comments due by 8-8-02; published 5-10-02 [FR 02-11376]

Ports and waterways safety:
Narragansett Bay, Providence and Taunton Rivers, RI; safety and security zones; comments due by 8-5-02; published 6-20-02 [FR 02-15610]
Ponce Bay, Tallaboa Bay, and Guayanilla Bay, PR and Limetree Bay, St. Croix, Virgin Islands; safety zones; comments due by 8-5-02; published 6-4-02 [FR 02-13969]

TRANSPORTATION DEPARTMENT

Federal Aviation Administration

Air traffic operating and flight rules, etc.:
Reduced vertical separation minimum in domestic United States airspace; comments due by 8-8-02; published 5-10-02 [FR 02-11704]

Airworthiness directives:
Boeing; comments due by 8-5-02; published 6-19-02 [FR 02-15368]
Britax Sell Gmbh & Co.; comments due by 8-6-02; published 6-7-02 [FR 02-14252]
Eurocopter France; comments due by 8-6-02; published 6-7-02 [FR 02-14250]
Gulfstream Aerospace LP; comments due by 8-8-02; published 7-9-02 [FR 02-17080]
McDonnell Douglas; comments due by 8-6-02; published 7-17-02 [FR 02-18025]
Pratt & Whitney; comments due by 8-9-02; published 6-10-02 [FR 02-14251]
Rolls-Royce plc; comments due by 8-5-02; published 6-6-02 [FR 02-13885]
Sikorsky; comments due by 8-6-02; published 6-7-02 [FR 02-14249]

Airworthiness standards:
Special conditions—
Boeing Model 737-79U IGW (BBJ Serial Number 29441) airplane; comments due by 8-9-02; published 7-10-02 [FR 02-17375]

Class E airspace; comments due by 8-6-02; published 6-13-02 [FR 02-14985]

TREASURY DEPARTMENT

Customs Service

Merchandise entry and merchandise examination, sampling, and testing:
Food, drugs, devices, and cosmetics; conditional release period and customs bond obligations; comments due by 8-6-02; published 6-7-02 [FR 02-14286]

Trademarks, trade names, and copyrights:
Merchandise bearing counterfeit mark; civil fines for importation; comments due by 8-6-02; published 6-7-02 [FR 02-14287]

TREASURY DEPARTMENT

Internal Revenue Service

Income taxes:
Eligible deferred compensation plans; compensation deferred; comments due by 8-6-02; published 5-8-02 [FR 02-11036]

LIST OF PUBLIC LAWS

This is a continuing list of public bills from the current session of Congress which have become Federal laws. It may be used in conjunction with ''P L U S'' (Public Laws Update Service) on 202–523–6641. This list is also available online at *http://www.nara.gov/fedreg/plawcurr.html*.

The text of laws is not published in the **Federal Register** but may be ordered in ''slip law'' (individual pamphlet) form from the Superintendent of Documents, U.S. Government Printing Office, Washington, DC 20402 (phone, 202–512–1808). The text will also be made available on the Internet from GPO Access at *http://www.access.gpo.gov/nara/nara005.html*. Some laws may not yet be available.

H.R. 3763/P.L. 107–204

Sarbanes-Oxley Act of 2002 (July 30, 2002; 116 Stat. 745)

Last List July 26, 2002

Public Laws Electronic Notification Service (PENS)

PENS is a free electronic mail notification service of newly enacted public laws. To subscribe, go to *http://hydra.gsa.gov/archives/publaws-l.html* or send E-mail to **listserv@listserv.gsa.gov** with the following text message:

SUBSCRIBE PUBLAWS-L Your Name.

Note: This service is strictly for E-mail notification of new laws. The text of laws is not available through this service. **PENS** cannot respond to specific inquiries sent to this address.