AUTHENTICATED U.S. GOVERNMENT INFORMATION GPO

Federal Register

8–7–02 Wednesday
Vol. 67 No. 152 August 7, 2002
Pages 51065–51458

The **FEDERAL REGISTER** is published daily, Monday through Friday, except official holidays, by the Office of the Federal Register, National Archives and Records Administration, Washington, DC 20408, under the Federal Register Act (44 U.S.C. Ch. 15) and the regulations of the Administrative Committee of the Federal Register (1 CFR Ch. I). The Superintendent of Documents, U.S. Government Printing Office, Washington, DC 20402 is the exclusive distributor of the official edition.

The **Federal Register** provides a uniform system for making available to the public regulations and legal notices issued by Federal agencies. These include Presidential proclamations and Executive Orders, Federal agency documents having general applicability and legal effect, documents required to be published by act of Congress, and other Federal agency documents of public interest.

Documents are on file for public inspection in the Office of the Federal Register the day before they are published, unless the issuing agency requests earlier filing. For a list of documents currently on file for public inspection, see http://www.nara.gov/fedreg.

The seal of the National Archives and Records Administration authenticates the Federal Register as the official serial publication established under the Federal Register Act. Under 44 U.S.C. 1507, the contents of the **Federal Register** shall be judicially noticed.

The **Federal Register** is published in paper and on 24x microfiche. It is also available online at no charge as one of the databases on GPO Access, a service of the U.S. Government Printing Office.

The online edition of the **Federal Register** is issued under the authority of the Administrative Committee of the Federal Register as the official legal equivalent of the paper and microfiche editions (44 U.S.C. 4101 and 1 CFR 5.10). It is updated by 6 a.m. each day the **Federal Register** is published and it includes both text and graphics from Volume 59, Number 1 (January 2, 1994) forward.

GPO Access users can choose to retrieve online **Federal Register** documents as TEXT (ASCII text, graphics omitted), PDF (Adobe Portable Document Format, including full text and all graphics), or SUMMARY (abbreviated text) files. Users should carefully check retrieved material to ensure that documents were properly downloaded.

On the World Wide Web, connect to the **Federal Register** at http://www.access.gpo.gov/nara. Those without World Wide Web access can also connect with a local WAIS client, by Telnet to swais.access.gpo.gov, or by dialing (202) 512–1661 with a computer and modem. When using Telnet or modem, type swais, then log in as guest with no password.

For more information about GPO Access, contact the GPO Access User Support Team by E-mail at gpoaccess@gpo.gov; by fax at (202) 512–1262; or call (202) 512–1530 or 1–888–293–6498 (toll free) between 7 a.m. and 5 p.m. Eastern time, Monday–Friday, except Federal holidays.

The annual subscription price for the **Federal Register** paper edition is $699, or $764 for a combined **Federal Register, Federal Register** Index and List of CFR Sections Affected (LSA) subscription; the microfiche edition of the **Federal Register** including the **Federal Register** Index and LSA is $264. Six month subscriptions are available for one-half the annual rate. The charge for individual copies in paper form is $10.00 for each issue, or $10.00 for each group of pages as actually bound; or $2.00 for each issue in microfiche form. All prices include regular domestic postage and handling. International customers please add 25% for foreign handling. Remit check or money order, made payable to the Superintendent of Documents, or charge to your GPO Deposit Account, VISA, MasterCard or Discover. Mail to: New Orders, Superintendent of Documents, P.O. Box 371954, Pittsburgh, PA 15250–7954.

There are no restrictions on the republication of material appearing in the **Federal Register.**

How To Cite This Publication: Use the volume number and the page number. Example: 67 FR 12345.

SUBSCRIPTIONS AND COPIES

PUBLIC

Subscriptions:

Paper or fiche	**202–512–1800**
Assistance with public subscriptions	**202–512–1806**

General online information **202–512–1530; 1–888–293–6498**

Single copies/back copies:

Paper or fiche	**202–512–1800**
Assistance with public single copies	**1–866–512–1800 (Toll-Free)**

FEDERAL AGENCIES

Subscriptions:

Paper or fiche	**202–523–5243**
Assistance with Federal agency subscriptions	**202–523–5243**

What's NEW!

Federal Register Table of Contents via e-mail

Subscribe to FEDREGTOC, to receive the **Federal Register** Table of Contents in your e-mail every day.

If you get the HTML version, you can click directly to any document in the issue.

To subscribe, go to **http://listserv.access.gpo.gov** and select:

Online mailing list archives
FEDREGTOC-L
Join or leave the list

Then follow the instructions.

FEDERAL REGISTER WORKSHOP

THE FEDERAL REGISTER: WHAT IT IS AND HOW TO USE IT

FOR: Any person who uses the **Federal Register** and Code of Federal Regulations.

WHO: Sponsored by the Office of the Federal Register.

WHAT: Free public briefings (approximately 3 hours) to present:

1. The regulatory process, with a focus on the Federal Register system and the public's role in the development of regulations.
2. The relationship between the **Federal Register** and Code of Federal Regulations.
3. The important elements of typical **Federal Register** documents.
4. An introduction to the finding aids of the FR/CFR system.

WHY: To provide the public with access to information necessary to research Federal agency regulations which directly affect them. There will be no discussion of specific agency regulations.

WASHINGTON, DC

WHEN: September 24, 2002—9:00 a.m. to noon

WHERE: Office of the Federal Register
Conference Room
800 North Capitol Street, NW.
Washington, DC
(3 blocks north of Union Station Metro)

RESERVATIONS: 202–523–4538; or
info@fedreg.nara.gov

Printed on recycled paper.

Contents

Federal Register

Vol. 67, No. 152

Wednesday, August 7, 2002

Agriculture Department
See Forest Service
NOTICES
Agency information collection activities:
Submission for OMB review; comment request, 51161–51165

Alcohol, Tobacco and Firearms Bureau
PROPOSED RULES
Alcohol; viticultural area designations:
California Coast, CA; denied, 51156–51157

Coast Guard
RULES
Ports and waterways safety:
Milwaukee Captain of Port Zone, WI; safety zone, 51083
Waterfront facilities and port and harbor areas; maritime identification credentials; clarification, 51082–51083
PROPOSED RULES
Drawbridge operations:
Florida, 51157–51159
Pollution:
Salvage and marine firefighting requirements; tank vessels carrying oil; response plans—
Extension of comment period; meeting, 51159–51160

Commerce Department
See International Trade Administration
See National Oceanic and Atmospheric Administration

Committee for the Implementation of Textile Agreements
NOTICES
Cotton, wool, and man-made textiles:
Bangladesh, 51235
Oman, 51235

Defense Department
NOTICES
Privacy Act:
Systems of records, 51235–51238

Drug Enforcement Administration
NOTICES
Applications, hearings, determinations, etc.:
Applied Science Labs, 51294
Johnson Matthey, Inc., 51294

Education Department
NOTICES
Agency information collection activities:
Submission for OMB review; comment request, 51238–51239

Employment and Training Administration
NOTICES
Adjustment assistance:
BP Exploration Alaska, Inc., 51296–51297
Champion Parts, Inc., 51297
DT Magnetics International, Inc., 51298
Enerflex, Inc., 51298
Hayes Lemmerz International, Inc., 51298–51299
Martin Marietta Magnesia Specialties, Inc., 51299
Newcor Co. et al., 51299–51300
R&B Falcon Management, Services, 51300
Sovereign Adhesives Inc., 51300–51301
SRAM Corp., 51301
Stabilit America, Inc., 51301
Whisper Jet, Inc., 51301
Adjustment assistance and NAFTA transitional adjustment assistance:
Osram Sylvania Products, Inc., et al., 51294–51296
Trailmobile Trailer, LLC, 51296
NAFTA transitional adjustment assistance:
Argus International, Inc., 51301–51302
Carey Industries, Inc., 51302
F.H. Stoltze Land & Lumber Co., 51302
Motorola, Inc., 51302–51303
Telair International, 51303
Trinity Rail Group et al., 51303–51305

Energy Department
See Federal Energy Regulatory Commission
NOTICES
Electricity export and import authorizations, permits, etc.:
NRG Power Marketing, Inc., 51239
Meetings:
Environmental Management Site-Specific Advisory Board—
Hanford Site, WA, 51239–51240

Environmental Protection Agency
RULES
Pesticides; tolerances in food, animal feeds, and raw agricultural commodities:
2-propenoic acid, etc., 51097–51102
Dichlormid, 51102–51105
Methyl anthranilate, 51083–51088
Metsulfuron methyl, 51088–51097
PROPOSED RULES
Air pollution control; new motor vehicles and engines:
Light-duty vehicles and trucks, heavy-duty vehicles and engines, nonroad engines, and motorcycles; motor vehicle and engine compliance program fees, 51401–51420
NOTICES
Pesticide, food, and feed additive petitions:
Akzo Nobel Surface Chemistry LLC, 51260–51262
Interregional Research Project (No. 4), 51262–51270
Syngenta Crop Protection, Inc., 51270–51272
Pesticide registration, cancellation, etc.:
Riverside 912 Herbicide, etc., 51250–51260
Pesticides; emergency exemptions, etc.:
Sodium chlorate, etc., 51272–51278
Reports and guidance documents; availability, etc.:
Food Quality Protection Act—
Trichlorfon; tolerance reassessment decision, 51278–51279

Executive Office of the President
See Trade Representative, Office of United States

Federal Aviation Administration
RULES
Airworthiness directives:
Bell, 51068–51069

Boeing, 51069–51070
McDonnell Douglas, 51065–51068
Class D and Class E airspace, 51070–51071
Class E airspace, 51071–51074
PROPOSED RULES
Airworthiness directives:
Bombardier, 51147–51149
Class E5 airspace, 51149–51150

Federal Communications Commission
RULES
Common carrier services:
Satellite communications—
Direct broadcast satellite service; policy and service rules, 51110–51115
Licensing procedures; space to earth transmissions in upper and lower L-band, 51105–51110
Radio stations; table of assignments:
Pennsylvania, 51115–51116
NOTICES
Agency information collection activities:
Proposed collection; comment request, 51279–51282
Reporting and recordkeeping requirements, 51282
Meetings; Sunshine Act, 51282

Federal Election Commission
PROPOSED RULES
Bipartisan Campaign Reform Act; implementation:
Electioneering communications, 51131–51147

Federal Energy Regulatory Commission
PROPOSED RULES
Uniform Systems of Account:
Cash management practices, 51150–51156
NOTICES
Electric rate and corporate regulation filings:
Genova Arkansas I, LLC, et al., 51244–51246
Environmental statements; availability, etc.:
CMS Trunkline LNG Co., LLC, 51246
Lyndonville Village Electric Department, VT, 51246–51247
Upper Peninsula Power Co. et al., 51247
Hydroelectric applications, 51247–51250
Applications, hearings, determinations, etc.:
Alliance Pipeline L.P., 51240
ANR Storage Co., 51240
Columbia Gulf Transmission Co., 51241
Equitrans, L.P., 51241
Great Lakes Gas Transmission L.P., 51241–51242
Madison Paper Industries, 51242
Panhandle Eastern Pipe Line Co., 51242
PG&E Gas Transmission, Northwest Corp., 51242–51243
Tennessee Gas Pipeline Co., 51243–51244
Texas Gas Transmission Corp., 51244
Transcontinental Gas Pipe Line Corp., 51244

Federal Highway Administration
NOTICES
Environmental statements; notice of intent:
Hill and Blain Counties, MT, 51316–51317

Federal Maritime Commission
NOTICES
Agreements filed, etc., 51282–51283
Ocean transportation intermediary licenses:
Triton Shipping Co., Inc., 51283

Federal Reserve System
NOTICES
Banks and bank holding companies:
Formations, acquisitions, and mergers, 51283
Formations, acquisitions, and mergers; correction, 51283

Fish and Wildlife Service
RULES
Endangered and threatened species:
Carson wandering skipper, 51116–51129

Food and Drug Administration
RULES
Animal drugs, feeds, and related products:
Oxytetracycline, 51081–51082
Oxytetracycline hydrochloride soluble powder, 51080–51081
Sponsor name and address changes—
Farnam Companies, Inc., 51080
IDEXX Pharmaceuticals, Inc., 51079
Pharmacia & Upjohn Co., 51079–51080
NOTICES
Reports and guidance documents; availability, etc.:
Potassum chloride modified-release tablets and capsules; in vivo bioequivalence and in vitro dissolution testing, 51284–51285

Forest Service
NOTICES
Meetings:
Resource Advisory Committees—
Alpine County, 51165
Southwest Idaho, 51165
National Forest System lands:
Alaska timber sale contracts extension; substantial public interest, 51165–51167

Geological Survey
NOTICES
Agency information collection activities:
Submission for OMB review; comment request, 51290–51291

Health and Human Services Department
See Food and Drug Administration
See Health Resources and Services Administration
See National Institutes of Health
NOTICES
Reports and guidance documents; availability, etc.:
Japanese American youth; precursors to diabetes; research protocol support, 51283–51284

Health Resources and Services Administration
NOTICES
Grants and cooperative agreements; availability, etc.:
HIV/AIDS peer education programs—
Peer Educator Training Sites and Resource Evaluation Center, 51285–51286
HIV/AIDS prevention and treatment—
American Indian/Alaska Native Technical Assistance Center, 51286–51287
Meetings:
Childhood Vaccines Advisory Commission, 51287

Indian Affairs Bureau
PROPOSED RULES
Land and water:
Indian Reservation Roads Program, 51327–51400

Interior Department
See Fish and Wildlife Service
See Geological Survey
See Indian Affairs Bureau
See Land Management Bureau
See Reclamation Bureau

International Trade Administration
NOTICES
Antidumping:
Bulk aspirin from—
China, 51167–51170
Canned pineapple fruit from—
Thailand, 51171–51178
Carbon steel butt-weld pipe fittings from—
Thailand, 51178–51182
Fresh Atlantic salmon from—
Chile, 51182–51191
Furfuryl alcohol from—
Thailand, 51191–51193
In-shell raw pistachios from—
Iran, 51193–51194
Pasta from—
Turkey, 51194–51199
Stainless steel sheet and strip in coils from—
France, 51210–51216
Gerrmany, 51199–51204
Italy, 51224–51231
Korea, 51216–51224
Mexico, 51204–51210

Justice Department
See Drug Enforcement Administration
RULES
Radiation Exposure Compensation Act Amendments of 2000; claims:
Technical amendments, 51421–51439
PROPOSED RULES
Radiation Exposure Compensation Act Amendments of 2000; claims:
Uranium millers, ore transporters, and miners; coverage expansion; representation and fees, 51439–51457
NOTICES
Agency information collection activities:
Proposed collection; comment request, 51292–51293
Submission for OMB review; comment request, 51293

Labor Department
See Employment and Training Administration
See Mine Safety and Health Administration

Land Management Bureau
NOTICES
Agency information collection activities:
Proposed collection; comment request, 51291–51292

Mine Safety and Health Administration
NOTICES
Safety standard petitions:
Mountain Coal Co., LLC, 51305

National Institutes of Health
NOTICES
Agency information collection activities:
Submission for OMB review; comment request, 51287–51288
Inventions, Government-owned; availability for licensing, 51288–51289
Reports and guidance documents; availability, etc.:
Laboratory animal welfare; humane care and use of laboratory animals; PHS policy change, 51289–51290

National Oceanic and Atmospheric Administration
RULES
Fishery conservation and management:
Alaska; fisheries of Exclusive Economic Zone—
Gulf of Alaska deep-water species; trawl gear fishing; closure, 51129–51130
Shortraker and rougheye rockfish, 51130
Caribbean, Gulf of Mexico, and South Atlantic fisheries—
Gulf of Mexico shrimp, 51074–51079
NOTICES
Environmental statements; availability, etc.:
Applied Environmental Services (Shore Realty) Superfund Site, NY, 51231–51234
Reports and guidance documents; availability, etc.:
Harbor porpoise bycatch estimates (2001), 51234

Office of United States Trade Representative
See Trade Representative, Office of United States

Personnel Management Office
NOTICES
Agency information collection activities:
Proposed collection; comment request, 51305–51306

Public Health Service
See Food and Drug Administration
See Health Resources and Services Administration
See National Institutes of Health

Reclamation Bureau
NOTICES
Agency information collection activities:
Proposed collection; comment request, 51292

Research and Special Programs Administration
NOTICES
Hazardous materials:
Applications; exemptions, renewals, etc., 51317–51323

Securities and Exchange Commission
NOTICES
Self-regulatory organizations; proposed rule changes:
National Association of Securities Dealers, Inc., 51306–51312
Pacific Exchange, Inc., 51312–51315

Textile Agreements Implementation Committee
See Committee for the Implementation of Textile Agreements

Trade Representative, Office of United States
NOTICES
World Trade Organization:
France and Germany; consultations regarding U.S. antidumping and countervailing duties on steel products, 51315–51316

Transportation Department
See Coast Guard
See Federal Aviation Administration
See Federal Highway Administration
See Research and Special Programs Administration

Treasury Department
See Alcohol, Tobacco and Firearms Bureau

NOTICES
Agency information collection activities:
Submission for OMB review; comment request, 51323

Veterans Affairs Department
NOTICES
Agency information collection activities:
Proposed collection; comment request, 51323–51324
Submission for OMB review; comment request, 51324–51325

Separate Parts In This Issue

Part II
Interior Department, Indian Affairs Bureau, 51327–51400

Part III
Environmental Protection Agency, 51401–51420

Part IV
Justice Department, 51421–51457

Reader Aids

Consult the Reader Aids section at the end of this issue for phone numbers, online resources, finding aids, reminders, and notice of recently enacted public laws.
To subscribe to the Federal Register Table of Contents LISTSERV electronic mailing list, go to http://listserv.access.gpo.gov and select Online mailing list archives, FEDREGTOC-L, Join or leave the list (or change settings); then follow the instructions.

CFR PARTS AFFECTED IN THIS ISSUE

A cumulative list of the parts affected this month can be found in the Reader Aids section at the end of this issue.

11 CFR

Proposed Rules:

100 51131
104 51131
105 51131
114 51131

14 CFR

39 (3 documents) 51065, 51068, 51069
71 (5 documents) 51070, 51071, 51072, 51073, 51074

Proposed Rules:

39 51147
71 51149

15 CFR

902 51074

18 CFR

Proposed Rules:

101 51150
201 51150
352 51150

21 CFR

510 (3 documents) 51079, 51080
520 51080
529 51079
558 (2 documents) 51080, 51081

25 CFR

Proposed Rules:

170 51328

27 CFR

Proposed Rules:

9 51156

28 CFR

79 51422

Proposed Rules:

79 51440

33 CFR

6 51082
125 51082
165 51083

Proposed Rules:

117 51157
155 51159

40 CFR

180 (4 documents) 51083, 51088, 51097, 51102

Proposed Rules:

85 51402
86 51402

47 CFR

25 (2 documents) 51105, 51110
73 51115
100 51110

50 CFR

17 51116
622 51074
679 (2 documents) 51129, 51130

Rules and Regulations

Federal Register
Vol. 67, No. 152
Wednesday, August 7, 2002

This section of the FEDERAL REGISTER contains regulatory documents having general applicability and legal effect, most of which are keyed to and codified in the Code of Federal Regulations, which is published under 50 titles pursuant to 44 U.S.C. 1510.

The Code of Federal Regulations is sold by the Superintendent of Documents. Prices of new books are listed in the first FEDERAL REGISTER issue of each week.

DEPARTMENT OF TRANSPORTATION

Federal Aviation Administration

14 CFR Part 39

[Docket No. 2002–NM–130–AD; Amendment 39–12840; AD 2002–16–01]

RIN 2120–AA64

Airworthiness Directives; McDonnell Douglas Model DC–8–21, –31, –32, –33, –41, –42, and –43 Airplanes; and Model DC–8–50, –60, and –70 Series Airplanes; Modified per Supplemental Type Certificates SA1063SO, SA1862SO, or SA1832SO

AGENCY: Federal Aviation Administration, DOT.

ACTION: Final rule; request for comments.

SUMMARY: This amendment adopts a new airworthiness directive (AD) that is applicable to certain McDonnell Douglas Model DC–8–21, –31, –32, –33, –41, –42, and –43 airplanes; and certain Model DC–8–50, –60, and –70 series airplanes; that have been converted from a passenger-to a cargo-carrying (''freighter'') configuration. This action requires gaining access to the floor beam attachments to the lower door jamb within the main cargo door area; performing repetitive inspections to detect cracking or damage of such attachments, including splice plates, angles, and clips; and, if necessary, expanding the inspection area and replacing any cracked or damaged part with a new part. This action is necessary to prevent failure of such floor beam attachments during ground or flight operations, which could cause damage to the floor structure and consequent jamming of the flight control cables, and result in loss of controllability of the airplane in flight.

DATES: Effective August 22, 2002.

Comments for inclusion in the Rules Docket must be received on or before October 7, 2002.

ADDRESSES: Submit comments in triplicate to the Federal Aviation Administration (FAA), Transport Airplane Directorate, ANM–114, Attention: Rules Docket No. 2002–NM–130–AD, 1601 Lind Avenue, SW., Renton, Washington 98055–4056. Comments may be inspected at this location between 9 a.m. and 3 p.m., Monday through Friday, except Federal holidays. Comments may be submitted via fax to (425) 227–1232. Comments may also be sent via the Internet using the following address: 9-anm-iarcomment@faa.gov. Comments sent via fax or the Internet must contain ''Docket No. 2002–NM–130–AD'' in the subject line and need not be submitted in triplicate. Comments sent via the Internet as attached electronic files must be formatted in Microsoft Word 97 for Windows or ASCII text.

Information pertaining to this amendment may be examined at the FAA, Transport Airplane Directorate, 1601 Lind Avenue, SW., Renton, Washington; or at the FAA, Atlanta Certification Office, One Crown Center, 1895 Phoenix Boulevard, suite 450, Atlanta, Georgia.

FOR FURTHER INFORMATION CONTACT: *Technical Information:* Hassan Amini, Aerospace Engineer, Airframe and Propulsion Branch, ACE–117A, FAA, Atlanta Aircraft Certification Office, One Crown Center, 1895 Phoenix Boulevard, suite 450, Atlanta, Georgia 30349; telephone (770) 703–6080; fax (770) 703–6097.

Other Information: Sandi Carli, Airworthiness Directive Technical Editor/Writer; telephone (425) 687–4243, fax (425) 687–4271. Questions or comments may also be sent via the Internet using the following address: *sandi.carli@faa.gov.* Questions or comments sent via the Internet as attached electronic files must be formatted in Microsoft Word 97 for Windows or ASCII text.

SUPPLEMENTARY INFORMATION: The FAA has received several reports of findings of cracked or broken angles and splice plates on floor beam attachments to the lower door jamb of the main cargo door area on certain McDonnell Douglas Model DC–8–21, –31, –32, –33, –41, –42, and –43 airplanes; and Model DC–8–50, –60, and –70 series airplanes. One report revealed that, during a routine C-check on a Model DC–8–62 airplane, fractures were found in 9 of 11 of the floor beam attachments to the lower door jamb. Findings indicate that such fractures could be due to factors associated with flight operations and/or loading operations on the ground. Such conditions, if not corrected, could cause failure of such floor beam attachments during ground or flight operations. This could cause damage to the floor structure and consequent jamming of the control cables, and result in loss of controllability of the airplane in flight.

Explanation of Requirements of the Rule

Since an unsafe condition has been identified that is likely to exist or develop on other airplanes of the same type design, this AD is being issued to prevent failure of the floor beam attachments to the lower door jamb. Such failure could cause damage to the floor structure and consequent jamming of the flight control cables, and result in loss of controllability of the airplane in flight. This AD requires gaining access to the floor beam attachments to the lower door jamb within the main cargo door area; and performing repetitive inspections to detect cracking or damage of such attachments, including splice plates, angles, and clips. If any cracking or damage is found, this AD also requires extending the area of inspection 60 inches forward and aft of the main cargo door area, and replacing any cracked or damaged part with a new part. Figure 1 of Appendix 1 of this AD identifies the inspection area and parts to be inspected.

This AD also requires operators to report the results of any detailed inspection required by paragraph (a) of this AD to the FAA.

Interim Action

This is considered to be interim action until final action is identified, at which time the FAA may consider further rulemaking. Because the cause of the addressed cracking or damage is not currently known, the intent of the required inspection report is to enable the FAA to determine how widespread such cracking or damage may be in the affected fleet. Based on the results of this report, further corrective action may be warranted.

Determination of Rule's Effective Date

Since a situation exists that requires the immediate adoption of this regulation, it is found that notice and opportunity for prior public comment hereon are impracticable, and that good cause exists for making this amendment effective in less than 30 days.

Comments Invited

Although this action is in the form of a final rule that involves requirements affecting flight safety and, thus, was not preceded by notice and an opportunity for public comment, comments are invited on this rule. Interested persons are invited to comment on this rule by submitting such written data, views, or arguments as they may desire. Communications shall identify the Rules Docket number and be submitted in triplicate to the address specified under the caption **ADDRESSES**. All communications received on or before the closing date for comments will be considered, and this rule may be amended in light of the comments received. Factual information that supports the commenter's ideas and suggestions is extremely helpful in evaluating the effectiveness of the AD action and determining whether additional rulemaking action would be needed.

Submit comments using the following format:

- Organize comments issue-by-issue. For example, discuss a request to change the compliance time and a request to change the service bulletin reference as two separate issues.
- For each issue, state what specific change to the AD is being requested.
- Include justification (*e.g.*, reasons or data) for each request.

Comments are specifically invited on the overall regulatory, economic, environmental, and energy aspects of the rule that might suggest a need to modify the rule. All comments submitted will be available, both before and after the closing date for comments, in the Rules Docket for examination by interested persons. A report that summarizes each FAA-public contact concerned with the substance of this AD will be filed in the Rules Docket.

Commenters wishing the FAA to acknowledge receipt of their comments submitted in response to this rule must submit a self-addressed, stamped postcard on which the following statement is made: ''Comments to Docket Number 2002–NM–130–AD.'' The postcard will be date stamped and returned to the commenter.

Regulatory Impact

The regulations adopted herein will not have a substantial direct effect on the States, on the relationship between the national Government and the States, or on the distribution of power and responsibilities among the various levels of government. Therefore, it is determined that this final rule does not have federalism implications under Executive Order 13132.

The FAA has determined that this regulation is an emergency regulation that must be issued immediately to correct an unsafe condition in aircraft, and that it is not a ''significant regulatory action'' under Executive Order 12866. It has been determined further that this action involves an emergency regulation under DOT Regulatory Policies and Procedures (44 FR 11034, February 26, 1979). If it is determined that this emergency regulation otherwise would be significant under DOT Regulatory Policies and Procedures, a final regulatory evaluation will be prepared and placed in the Rules Docket. A copy of it, if filed, may be obtained from the Rules Docket at the location provided under the caption **ADDRESSES**.

List of Subjects in 14 CFR Part 39

Air transportation, Aircraft, Aviation safety, Safety.

Adoption of the Amendment

Accordingly, pursuant to the authority delegated to me by the Administrator, the Federal Aviation Administration amends part 39 of the Federal Aviation Regulations (14 CFR part 39) as follows:

PART 39—AIRWORTHINESS DIRECTIVES

1. The authority citation for part 39 continues to read as follows:

Authority: 49 U.S.C. 106(g), 40113, 44701.

§ 39.13 [Amended]

2. Section 39.13 is amended by adding the following new airworthiness directive:

2002–16–01 McDonnell Douglas: Amendment 39–12840. Docket 2002–NM–130–AD.

Applicability: This AD applies to airplanes that have been converted from a passenger- to a cargo-carrying (''freighter'') configuration per Supplemental Type Certificate SA1063SO, SA1862SO, or SA1832SO; certificated in any category; as listed in the following table:

TABLE—APPLICABILITY

Airplane Models
DC–8–21, –31, –32, –33, –41, –42, and –43 airplanes;
DC–8–51, –52, –53, and –55 airplanes;
DC–8–61, –62, and –63 airplanes; and
DC–8–71, –72, and –73 airplanes.

Note 1: This AD applies to each airplane identified in the preceding applicability provision, regardless of whether it has been otherwise modified, altered, or repaired in the area subject to the requirements of this AD. For airplanes that have been modified, altered, or repaired so that the performance of the requirements of this AD is affected, the owner/operator must request approval for an alternative method of compliance in accordance with paragraph (d) of this AD. The request should include an assessment of the effect of the modification, alteration, or repair on the unsafe condition addressed by this AD; and, if the unsafe condition has not been eliminated, the request should include specific proposed actions to address it.

Compliance: Required as indicated, unless accomplished previously.

To prevent failure of the floor beam attachments to the lower door jamb of the main cargo door due to cracking or damage during ground or flight operations, which could cause damage to the floor structure and consequent jamming of the flight control cables, and result in loss of controllability of the airplane in flight; accomplish the following:

Gaining Access and Repetitive Inspections

(a) Within 50 flight hours or 60 days after the effective date of this AD, whichever occurs later, accomplish the actions required by paragraphs (a)(1) and (a)(2) of this AD.

(1) Gain access to the floor beam attachments to the lower door jamb within the main cargo door area by removing the cargo handling system (including ball mats, roller trays, and pallet locks), floor panels, and cargo liner of the lower baggage compartment as necessary to access both sides of the floor beam attachments.

(2) Perform a detailed inspection of the main cargo door area to detect any cracking or damage of the floor beam attachments to the lower door jamb, including the splice plates, angles, and clips identified in Figure 1 of Appendix 1 of this AD Thereafter, repeat the inspection at intervals not to exceed 2,500 flight cycles or 18 months, whichever occurs earlier.

Note 2: For the purposes of this AD, a detailed inspection is defined as: ''An intensive visual examination of a specific structural area, system, installation, or assembly to detect damage, failure, or irregularity. Available lighting is normally supplemented with a direct source of good lighting at intensity deemed appropriate by the inspector. Inspection aids such as mirror, magnifying lenses, etc., may be used. Surface cleaning and elaborate access procedures may be required.''

Extending Inspection Area and Replacement

(b) If any cracking or damage is found during any inspection required by paragraph (a)(2) of this AD, before further flight, extend the area of inspection 60 inches forward and aft of the main cargo door area, and replace any cracked or damaged part with a new part identified in Figure 1 of Appendix 1 of this AD.

Reporting Requirement

(c) Within 10 days after performing any inspection required by paragraph (a)(2) of this AD: Send a report of the inspection findings to the Manager, Atlanta Aircraft Certification Office (ACO), One Crown Center, 1895 Phoenix Boulevard, suite 450, Atlanta, Georgia 30349; telephone (770) 703–6080; fax (770) 703–6097. The report must include the inspection results, including a description of any cracking or damage found, crack location and length, part number of any cracked or damaged part, airplane serial number, number of flight cycles and flight hours on the airplane, and number of flight cycles and flight hours after the airplane was converted from a passenger-to a cargo-carrying (''freighter'') configuration. Information collection requirements contained in this AD have been approved by the Office of Management and Budget (OMB) under the provisions of the Paperwork Reduction Act of 1980 (44 U.S.C. 3501 *et seq.*) and have been assigned OMB Control Number 2120–0056.

Alternative Methods of Compliance

(d) An alternative method of compliance or adjustment of the compliance time that provides an acceptable level of safety may be used if approved by the Manager, Atlanta ACO. Operators shall submit their requests through an appropriate FAA Principal Maintenance Inspector, who may add comments and then send it to the Manager, Atlanta ACO.

Note 3: Information concerning the existence of approved alternative methods of compliance with this AD, if any, may be obtained from the Atlanta ACO.

Special Flight Permits

(e) Special flight permits may be issued in accordance with sections 21.197 and 21.199 of the Federal Aviation Regulations (14 CFR 21.197 and 21.199) to operate the airplane to a location where the requirements of this AD can be accomplished.

Effective Date

(f) This amendment becomes effective on August 22, 2002.

Appendix 1

BILLING CODE 4910–13–P

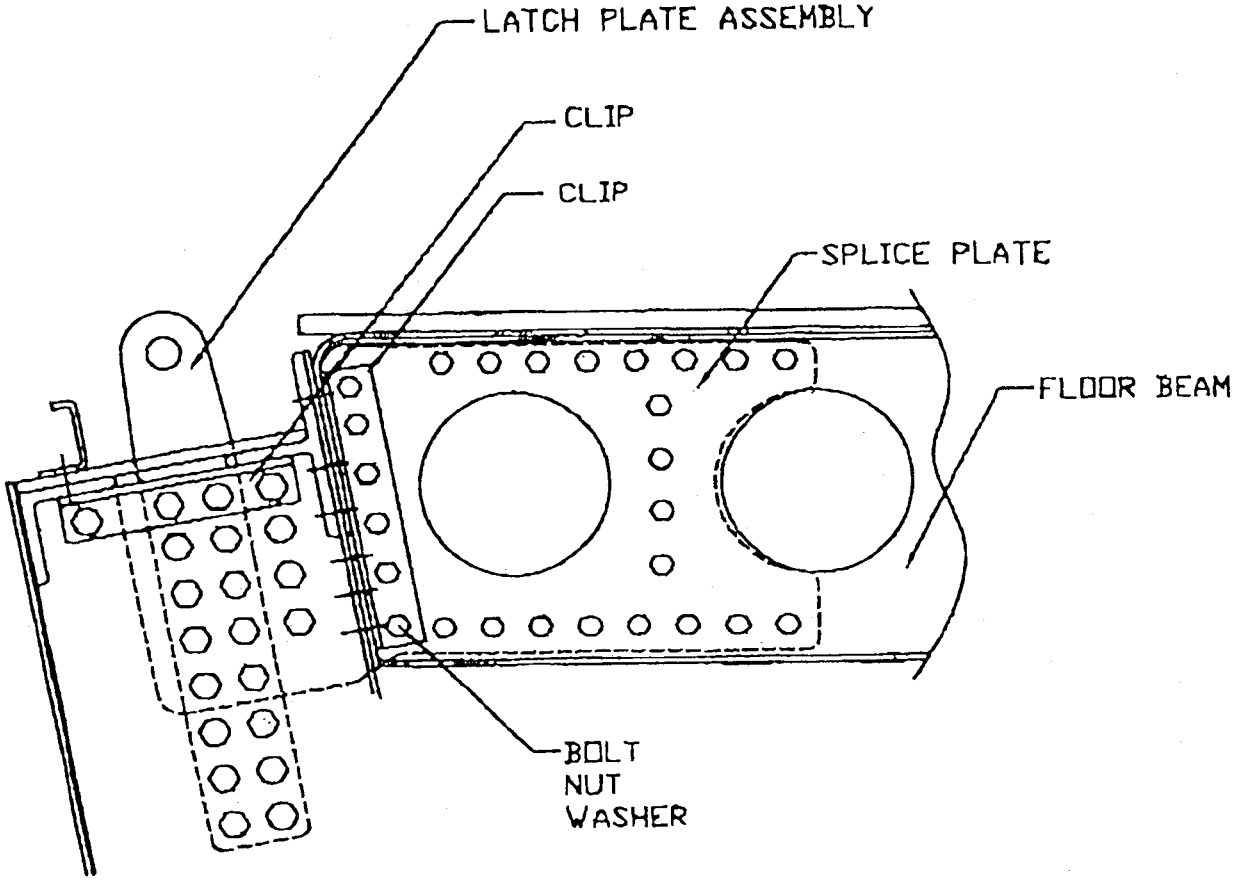

Figure 1.

Issued in Renton, Washington, on July 29, 2002.

Vi L. Lipski,

Manager, Transport Airplane Directorate, Aircraft Certification Service.

[FR Doc. 02–19879 Filed 8–6–02; 8:45 am]

BILLING CODE 4910–13–C

DEPARTMENT OF TRANSPORTATION

Federal Aviation Administration

14 CFR Part 39

[Docket No. 2002–SW–24–AD; Amendment 39–12839; AD 2002–09–51]

RIN 2120–AA64

Airworthiness Directives; Bell Helicopter Textron, Inc. Model 204B, 205A, A–1, and B Helicopters

AGENCY: Federal Aviation Administration, DOT.

ACTION: Final rule; request for comments.

SUMMARY: This document publishes in the **Federal Register** an amendment adopting Emergency Airworthiness Directive (EAD) 2002–09–51, sent previously to all known U.S. owners and operators of specified Bell Helicopter Textron, Inc. (Bell) model helicopters by individual letters. This AD requires cleaning and inspecting the tail rotor (T/R) grip to determine if the grip is made of steel and replacing any grip not made of steel with an airworthy, steel TR grip. This AD is prompted by reports of a certain timed-out life limited T/R grips being improperly identified and reinstalled on Bell Model 204B, 205A, A–1, and B helicopters. The actions specified by this AD are intended to prevent failure of the T/R grip and subsequent loss of helicopter control.

DATES: Effective August 22, 2002, to all persons except those persons to whom it was made immediately effective by EAD 2002–09–51, issued on May 9, 2002, which contained the requirements of this amendment.

Comments for inclusion in the Rules Docket must be received on or before October 7, 2002.

ADDRESSES: Submit comments in triplicate to the Federal Aviation Administration (FAA), Office of the Regional Counsel, Southwest Region, Attention: Rules Docket No. 2002–SW–24–AD, 2601 Meacham Blvd., Room 663, Fort Worth, Texas 76137. You may also send comments electronically to the Rules Docket at the following address: *9-asw-adcomments@faa.gov.*

FOR FURTHER INFORMATION CONTACT: Kennedy Jones, Aviation Safety Engineer, FAA, Rotorcraft Directorate, Rotorcraft Certification Office, Fort Worth, Texas 76193–0170, telephone (817) 222–5148, fax (817) 222–5783.

SUPPLEMENTARY INFORMATION: On May 9, 2002, the FAA superseded EAD 2002–08–53, issued April 22, 2002, with EAD 2002–09–51, issued May 9, 2002. EAD 2002–08–53 required, before further flight, cleaning and inspecting certain T/R grips and removing each unairworthy grip not made of steel. EAD 2002–09–51 retains those requirements and in addition corrects a statement in the preamble that T/R grip, part number (P/N) 205–011–711–101, has an unlimited life. That T/R grip has a life limit of 2,500 hours time-in-service. Also, EAD 2002–09–51 adds the Bell Model 204B helicopter to the applicability and clarifies the inspection requirements by specifying that the magnet be placed on the T/R grip body and not on the steel bushing or steel interior liner to determine if the grip is made of steel. EAD 2002–08–53, was prompted by reports that T/R grips, P/N 204–011–728–019, required to be removed from service by AD 73–17–04 (38 FR 22223, August 17, 1973), were being re-marked as P/N 205–011–711–101 and installed on certain Bell model helicopters. EAD 2002–09–51 was prompted by information from the manufacturer stating that the Bell Model 204B helicopter should be added to the applicability because the unairworthy grips could be installed on that model. This condition, if not detected, could result in failure of the T/R grip and subsequent loss of helicopter control.

This unsafe condition is likely to exist or develop on other Bell model helicopters of the same type design. Therefore, this AD requires cleaning and inspecting the T/R grip to determine if the grip is made of steel by placing a magnet on the exterior of the main body of the T/R grip. If the T/R grip is not made of steel, it must be removed from service. The short compliance time involved is required because the previously described critical unsafe condition can adversely affect the controllability of the helicopter. Therefore, this AD requires, before further flight, that you clean and inspect the T/R grip to determine if the grip is made of steel and remove any grip that is not made of steel, and this AD must be issued immediately.

Since it was found that immediate corrective action was required, notice and opportunity for prior public comment thereon were impracticable and contrary to the public interest, and good cause existed to make the AD effective immediately by individual letters issued on May 9, 2002, to all known U.S. owners and operators of Bell Model 204B, 205A, A–1, and B helicopters. These conditions still exist, and the AD is hereby published in the **Federal Register** as an amendment to 14 CFR 39.13 to make it effective to all persons.

The FAA estimates that this AD will affect 269 helicopters of U.S. registry, that the required actions will take approximately 2 work hours per helicopter to accomplish, and that the average labor rate is $60 per work hour. Required parts will cost approximately $4864 per helicopter. Based on these figures, the FAA estimates the total cost impact of the AD on U.S. operators will be $1,340,696 to clean, inspect, and replace one T/R grip on each helicopter in the entire fleet.

Comments Invited

Although this action is in the form of a final rule that involves requirements affecting flight safety and, thus, was not preceded by notice and an opportunity for public comment, comments are invited on this rule. Interested persons are invited to comment on this rule by submitting such written data, views, or arguments as they may desire. Communications should identify the Rules Docket number and be submitted in triplicate to the address specified under the caption **ADDRESSES**. All communications received on or before the closing date for comments will be considered, and this rule may be amended in light of the comments received. Factual information that supports the commenter's ideas and suggestions is extremely helpful in evaluating the effectiveness of the AD action and determining whether additional rulemaking action would be needed.

Comments are specifically invited on the overall regulatory, economic, environmental, and energy aspects of the rule that might suggest a need to modify the rule. All comments submitted will be available in the Rules Docket for examination by interested persons. A report that summarizes each FAA-public contact concerned with the substance of this AD will be filed in the Rules Docket.

Commenters wishing the FAA to acknowledge receipt of their mailed comments submitted in response to this rule must submit a self-addressed, stamped postcard on which the following statement is made: ''Comments to Docket No. 2002–SW–24–AD.'' The postcard will be date

stamped and returned to the commenter.

The regulations adopted herein will not have a substantial direct effect on the States, on the relationship between the national Government and the States, or on the distribution of power and responsibilities among the various levels of government. Therefore, it is determined that this final rule does not have federalism implications under Executive Order 13132.

The FAA has determined that this regulation is an emergency regulation that must be issued immediately to correct an unsafe condition in aircraft, and that it is not a ''significant regulatory action'' under Executive Order 12866. It has been determined further that this action involves an emergency regulation under DOT Regulatory Policies and Procedures (44 FR 11034, February 26, 1979). If it is determined that this emergency regulation otherwise would be significant under DOT Regulatory Policies and Procedures, a final regulatory evaluation will be prepared and placed in the Rules Docket. A copy of it, if filed, may be obtained from the Rules Docket at the location provided under the caption **ADDRESSES**.

List of Subjects in 14 CFR Part 39

Air transportation, Aircraft, Aviation safety, Safety.

Adoption of the Amendment

Accordingly, pursuant to the authority delegated to me by the Administrator, the Federal Aviation Administration amends part 39 of the Federal Aviation Regulations (14 CFR part 39) as follows:

PART 39—AIRWORTHINESS DIRECTIVES

1. The authority citation for part 39 continues to read as follows:

Authority: 49 U.S.C. 106(g), 40113, 44701.

§ 39.13 [Amended]

2. Section 39.13 is amended by adding a new airworthiness directive to read as follows:

2002–09–51 Bell Helicopter Textron, Inc.: Amendment 39–12839. Docket No. 2002–SW–24–AD. Supersedes Emergency AD 2002–08–53, Docket No. 2002–SW–23–AD.

Applicability: Model 204B, 205A, A–1, and B helicopters, with tail rotor (T/R) grip, part number (P/N) 205–011–711–101, installed, certificated in any category.

Note 1: This AD applies to each helicopter identified in the preceding applicability provision, regardless of whether it has been otherwise modified, altered, or repaired in the area subject to the requirements of this AD. For helicopters that have been modified, altered, or repaired so that the performance of the requirements of this AD is affected, the owner/operator must request approval for an alternative method of compliance in accordance with paragraph (c) of this AD. The request should include an assessment of the effect of the modification, alteration, or repair on the unsafe condition addressed by this AD; and if the unsafe condition has not been eliminated, the request should include specific proposed actions to address it.

Compliance: Required before further flight, unless accomplished previously.

To prevent failure of the T/R grip and subsequent loss of helicopter control, accomplish the following:

(a) Clean the T/R grip.

(b) Determine if the T/R grip is made of steel by placing a magnet on the exterior of the main body of the T/R grip. Do *not* make this determination by placing the magnet on the steel bushing or steel interior liner. If the main body of the T/R grip is not made of steel, replace it with an airworthy steel T/R grip. Only replacement T/R grips made of steel are eligible for installation.

(c) An alternative method of compliance or adjustment of the compliance time that provides an acceptable level of safety may be used if approved by the Manager, Rotorcraft Certification Office, FAA. Operators shall submit their requests through an FAA Principal Maintenance Inspector, who may concur or comment and then send it to the Manager, Rotorcraft Certification Office.

(d) Special flight permits may be issued in accordance with 14 CFR 21.197 and 21.199 to operate the helicopter to a location where the requirements of this AD can be accomplished.

(e) This amendment becomes effective on August 22, 2002, to all persons except those persons to whom it was made immediately effective by Emergency AD 2002–09–51, issued May 9, 2002, which contained the requirements of this amendment.

Issued in Fort Worth, Texas, on July 26, 2002.

Eric Bries,

Acting Manager, Rotorcraft Directorate, Aircraft Certification Service.

[FR Doc. 02–19875 Filed 8–6–02; 8:45 am]

BILLING CODE 4910–13–P

DEPARTMENT OF TRANSPORTATION

Federal Aviation Administration

14 CFR Part 39

[Docket No. 2001–NM–233–AD; Amendment 39–12785; AD 2002–12–13]

RIN 2120–AA64

Airworthiness Directives; Boeing Model 727 Series Airplanes

AGENCY: Federal Aviation Administration, DOT.

ACTION: Final rule; correction.

SUMMARY: This document corrects an inadvertent error that appeared in airworthiness directive (AD) 2002–12–13 that was published in the **Federal Register** on June 26, 2002 (67 FR 42985). The inadvertent error resulted in reference to an incorrect address for service information. This AD is applicable to all Boeing Model 727 series airplanes. This AD requires a review of maintenance records or a one-time test to determine if elevator hinge support ribs on the trailing edge of the horizontal stabilizer are made from a certain material, and follow-on repetitive inspections for corrosion or cracking of the elevator hinge support ribs, if necessary. For airplanes with the affected ribs installed, this AD eventually requires replacement of all affected ribs with new, improved ribs.

DATES: Effective July 31, 2002.

FOR FURTHER INFORMATION CONTACT: *Technical Information:* Duong Tran, Aerospace Engineer, Airframe Branch, ANM–120S, FAA, Seattle Aircraft Certification Office, 1601 Lind Avenue, SW., Renton, Washington 98055–4056; telephone (425) 227–2773; fax (425) 227–1181.

Other Information: Judy Golder, Airworthiness Directive Technical Editor/Writer; telephone (425) 687–4241, fax (425) 227–1232. Questions or comments may also be sent via the Internet using the following address: *judy.golder@faa.gov.* Questions or comments sent via the Internet as attached electronic files must be formatted in Microsoft Word 97 for Windows or ASCII text.

SUPPLEMENTARY INFORMATION: Airworthiness Directive (AD) 2002–12–13, amendment 39–12785, applicable to all Boeing Model 727 series airplanes, was published in the **Federal Register** on June 26, 2002 (67 FR 42985). That AD requires a review of maintenance records or a one-time test to determine if elevator hinge support ribs on the trailing edge of the horizontal stabilizer are made from a certain material, and follow-on repetitive inspections for corrosion or cracking of the elevator hinge support ribs, if necessary. For airplanes with the affected ribs installed, this AD eventually requires replacement of all affected ribs with new, improved ribs.

As published, paragraph (h) of that AD contained an incorrect address for obtaining copies of service information. Paragraph (h) of that AD identifies Airbus Industrie, 1 Rond Point Maurice Bellonte, 31707 Blagnac Cedex, France, as the appropriate address for obtaining copies of service information. However, the correct address is Boeing

Commercial Airplane Group, P.O. Box 3707, Seattle, Washington 98124–2207.

Since no other part of the regulatory information has been changed, the final rule is not being republished in the **Federal Register**.

The effective date of this AD remains July 31, 2002.

§ 39.13 [Corrected]

On page 42989 of AD 2002–12–13, in the third column of paragraph (h) on the fourth line following the table, correct the sentence, ''Copies may be obtained from Airbus Industrie, 1 Rond Point Maurice Bellonte, 31707 Blagnac Cedex, France,'' to read ''Copies may be obtained from Boeing Commercial Airplane Group, P.O. Box 3707, Seattle, Washington 98124–2207.''

Issued in Renton, Washington, on July 29, 2002.

Vi L. Lipski,

Manager, Transport Airplane Directorate, Aircraft Certification Service.

[FR Doc. 02–19880 Filed 8–6–02; 8:45 am]

BILLING CODE 4910–13–P

DEPARTMENT OF TRANSPORTATION

Federal Aviation Administration

14 CFR Part 71

[Airspace Docket No. 00–ANM–30]

Revision to Class D and Class E Airspace, Medford, OR

AGENCY: Federal Aviation Administration (FAA), DOT.

ACTION: Final rule.

SUMMARY: This action will correct official documents required as a result of a legal name change of the airport from the Medford-Jackson Airport to the Rogue Valley International-Medford Airport. Additionally, this action revises the Class E airspace at Medford, OR, to provide for adequate controlled airspace for those aircraft using the RNAV (GPS) RWY 14 Standard Instrument Approach Procedure (SIAP) to Rogue Valley International-Medford Airport located in Medford, OR.

EFFECTIVE DATE: 0901 UTC, October 3, 2002.

FOR FURTHER INFORMATION CONTACT: Mick Wall, ANM–520.7, Federal Aviation Administration, Docket No. 00–ANM–30, 1601 Lind Avenue S.W., Renton, Washington, 98055–4056; telephone number: (425) 227–2527.

SUPPLEMENTARY INFORMATION:

History

On August 17, 2001, the FAA proposed to amend Title 14 Code of Federal Regulations, part 71 (14 CFR part 71) by revising Class D and Class E airspace at Medford, OR, (66 FR 43132). In 1992 the official name of the Medford Airport was changed from Medford-Jackson County Airport to Rogue Valley International-Medford Airport. This name change was reflected in a number of publications, but not officially referenced in 14 CFR 71.1. This rule corrects the legal description of airspaces associated with the airport to reflect its current name. Additionally, this rule revises the Class E airspace to provide adequate controlled airspace for aircraft executing the new RNAV (GPS) RWY 14 SIAP. Additional Class E airspace, 700-foot and 1,200 foot controlled airspace, is required to contain aircraft within controlled airspace which are executing IFR approaches to the airport. The intended effort of this rule is designed to revise the airspace's legal descriptions, provide safe and efficient use of the navigable airspace, and enhance/promote safe flight operations under Instrument Flight Rules (IFR) and Visual Flight Rules (VFR) at Rogue Valley International-Medford Airport.

Interested parties were not invited to participate in the rule making proceedings regarding the revision to the Class D airspace or the Class E airspace designated as a surface area, as this is an action to correct official documents resulting from the legal name change of the airport. This is considered an insignificant modification to the airspace description as only the name of the associated airport is changed. The dimensions and effective hours of the Class D airspace Class E 2 surface area were not revised.

The Rule

This amendment to 14 CFR part 71 revises the Class D surface area and Class E airspace legal descriptions for Medford, OR. This rule revises the airspace legal descriptions to reflect the current name designation of the Rogue Valley International-Medford Airport, Medford, OR, and provides safe and efficient use of the navigable airspace. It will promote safe flight operations under Instrument Flight Rules (IFR) and Visual Flight Rules (VFR) at Rogue Valley International-Medford Airport. Additionally, this rule will enhance flight operations during the transition between the terminal and en route phase of flight.

The airspace areas will be depicted on aeronautical charts for pilot reference. The coordinates for this airspace docket are based on North American Datum 83. Class D surface airspace areas are published in Paragraph 5000, Class E Airspace areas designated as surface areas for an airport are published in paragraph 6002, Class E airspace areas designated as extensions to Class D or Class E surface areas are published in Paragraph 6004, and Class E airspace areas extending upward from 700 feet or more above the surface of the earth are published in Paragraph 6005, of FAA Order 7400.9J dated August 31, 2001, and effective September 16, 2001, which is incorporated by reference in 14 CFR 71.1. The Class D and Class E airspace designations listed in this document will be published subsequently in the Order.

The FAA has determined that this regulation only involves an established body of technical regulations for which frequent and routine amendments are necessary to keep them operationally current. It, therefore, (1) is not a ''significantly regulatory action'' under Executive Order 12866; (2) is not a ''significant rule'' under DOT Regulatory Policies and Procedures (44 FR 11034; February 26, 1979); and (3) does not warrant preparation of a Regulatory Evaluation as the anticipated impact is so minimal. Since this is a routine matter that will affect air traffic procedures and air navigation, it is certified that this rule will not have significant economic impact on a substantial number of small entities under the criteria of the Regulatory Flexibility Act.

List of Subjects in 14 CFR Part 71

Airspace, Incorporation by reference, Navigation (air).

Adoption of the Amendment

In consideration of the foregoing, the Federal Aviation Administration amends 14 CFR part 71 as follows:

PART 71—DESIGNATION OF CLASS A, CLASS B, CLASS C, CLASS D, AND CLASS E AIRSPACE AREAS; AIRWAYS; ROUTES; AND REPORTING POINTS

1. The authority citation for 14 CFR part 71 continues to read as follows:

Authority: 49 U.S.C. 106(g), 40103, 40113, 40120; E.O. 10854, 24 FR 9565, 3 CFR, 1959–1963 Comp., p. 389.

§ 71.1 [Amended]

2. The incorporation by reference in 14 CFR 71.1 of the Federal Aviation Administration Order 7400.9J, Airspace Designations and Reporting Points, dated August 31, 2001, and effective September 16, 2001, is amended as follows:

Paragraph 5000 Class D Airspace

* * * * *

ANM OR D Medford, OR [REVISED]

Rogue Valley International-Medford Airport, OR
(Lat. 42°22′20″ N, long. 122°52′21″ W.)

That airspace extending upward from the surface to and including 3,800 feet MSL within a 4.1-mile radius of Rogue Valley International-Medford Airport. This Class D airspace area is effective during the specific dates and times established in advance by a Notice to Airmen. The effective date and time will thereafter be continuously published in the Airport/Facility Directory.

* * * * *

Paragraph 6002 Class E airspace designated as surface area for an airport.

* * * * *

ANM OR E2 Medford, OR [REVISED]

Rogue Valley International-Medford Airport, OR
(Lat. 42°22′20″ N, long. 122°52′21″ W.)

That airspace extending upward from the surface within a 4.1-mile radius of Rogue Valley International-Medford Airport. This Class E airspace is effective during specific dates and times established in advance by a Notice to Airmen. The effective date and time will thereafter be continuously published in the Airport/Facility Directory.

* * * * *

Paragraph 6004—Class E airspace areas designated as an extension to a Class D or Class E surface area.

* * * * *

ANM OR E4 Medford, OR [REVISED]

Rogue Valley International-Medford Airport, OR
(Lat. 42°22′20″ N, long. 122°52′21″ W.)
Rogue Valley VORTAC
(Lat. 42°27′47″ N, long. 122°54′47″ W.)
Pumie LOM
(Lat. 42°27′03″ N, long. 122°54′48″ W.)

That airspace extending upward from the surface within 1.8 miles west and 2.7 miles east of the Medford ILS localizer north course extending from the 4.1-mile radius to 2.7 miles north of the Pumie LOM and within 2.7 miles each side of the Rogue Valley VORTAC 352° radial extending from the Rogue Valley VORTAC to 11 miles north of the VORTAC, and within 4 miles each side of the Rogue Valley VORTAC 164° radial extending from the 4.1-mile radius to 19.3 miles south of the Rogue Valley International-Medford Airport.

* * * * *

Paragraph 6005 Class E airspace areas extending upward from 700 feet or more above the surface of the earth.

* * * * *

ANM OR E5 Medford OR [REVISED]

Rogue Valley International-Medford Airport, OR
(Lat. 42°22′20″ N, long. 122°52′21″ W.)

That airspace extending upward from 700 feet above the surface bounded by a line from lat. (42°45′00″ N, long. 123°10′54″ W.); to lat. 42°48′54″ N, long. 122°57′06″ W.; to lat. 42°44′00″ N, long. 122°44′36″ W.; to lat. 42°04′00″ N, long. 122°30′00″ W.; to lat. 41°56′30″ N, long. 123°00′00″ W.; to the point of origin; that airspace extending upward from 1,200-feet above the surface bounded by a line from lat. 43°00′00″ N, long. 123°30′00″ W.; to lat. 41°43′40″ N, long. 123°14′36″ W.; to lat. 42°00′00″ N, long. 122°10′30″ W to lat. 43°00′00″ N, long. 122°30′00″ W.; to the point of origin; excluding that airspace within Federal Airway areas, and the Klamath Falls, OR and Grants Pass, OR Class E airspace areas.

* * * * *

Issued in Seattle, Washington, on July 9, 2002.

Kathryn M. Vernon,

Acting Assistant Manager, Air Traffic Division, Northwest Mountain Region.

[FR Doc. 02–19557 Filed 8–6–02; 8:45 am]

BILLING CODE 4910–13–M

DEPARTMENT OF TRANSPORTATION

Federal Aviation Administration

14 CFR Part 71

[Airspace Docket No. 02–AAL–04]

Revision of Class E Airspace; Kodiak, AK

AGENCY: Federal Aviation Administration (FAA), DOT.

ACTION: Final rule.

SUMMARY: This action revises Class E airspace at Kodiak, AK. Four new Standard Instrument Approach Procedures (SIAP) have been established for the Kodiak Airport. The existing Class E airspace at Kodiak is insufficient to contain aircraft executing the new SIAPs. This rule will result in additional Class E airspace at Kodiak, AK.

EFFECTIVE DATE: 0901 UTC, October 3, 2002.

FOR FURTHER INFORMATION CONTACT: Derril Bergt, AAL–538, Federal Aviation Administration, 222 West 7th Avenue, Box 14, Anchorage, AK 99513–7587; telephone number (907) 271–2796; fax: (907) 271–2850; e-mail: *Derril.CTR.Bergt@faa.gov.* Internet address: *http://www.alaska.faa.gov/at* or at address *http://162.58.28.41/at.*

SUPPLEMENTARY INFORMATION:

History

On May 13, 2002, a proposal to revise part 71 of the Federal Aviation Regulations (14 CFR part 71) to add to the Class E airspace at Kodiak, AK, was published in the **Federal Register** (67 FR 31994–31995). Due to the development of four new SIAPs; Instrument Landing System Y (ILS Y) Runway 25, Very High Frequency Omni-navigational Range or Tactical Air Navigation Y (VOR or TACAN Y) Runway 25, Non-directional Beacon (NDB) Runway 25, Area Navigation (Global Positioning System) (RNAV GPS) Runway 25, additional Class E airspace is necessary to ensure that IFR operations remain within controlled airspace at the Kodiak, AK Airport. Interested parties were invited to participate in this rulemaking proceeding by submitting written comments on the proposal to the FAA. No public comments have been received, thus, the rule is adopted as written.

The area will be depicted on aeronautical charts for pilot reference. The coordinates for this airspace docket are based on North American Datum 83. The Class E airspace areas extending upward from 700 feet or more above the surface of the earth are published in paragraph 6005 of FAA Order 7400.9J. *Airspace Designations and Reporting Points,* dated August 31, 2001 and effective September 16, 2001 which is incorporated by reference in 14 CFR 71.1. The Class E airspace designation listed in this document will be revised subsequently in the Order.

The Rule

This revision to 14 CFR part 71 adds to the Class E airspace at Kodiak, Alaska. Additional Class E airspace is being created to contain aircraft executing the four new SIAPs and will be depicted on aeronautical charts for pilot reference. The intended effect of this rule is to provide adequate controlled airspace for IFR operations at Kodiak Airport, Kodiak, Alaska.

The FAA has determined that this regulation only involves an established body of technical regulations for which frequent and routine amendments are necessary to keep them operationally current. It, therefore—(1) is not a ''significant regulatory action'' under Executive Order 12866; (2) is not a ''significant rule'' under DOT Regulatory Policies and Procedures (44 FR 11034; February 26, 1979); and (3) does not warrant preparation of a regulatory evaluation as the anticipated impact is so minimal. Since this a routine matter that will only affect air traffic procedures and air navigation, it is certified that this rule will not have a significant economic impact on a substantial number of small entities under the criteria of the Regulatory Flexibility Act.

List of Subjects in 14 CFR Part 71

Airspace, Incorporation by reference, Navigation (air).

Adoption of the Amendment

In consideration of the foregoing, the Federal Aviation Administration amends 14 CFR part 71 as follows:

PART 71—DESIGNATION OF CLASS A, CLASS B, CLASS C, CLASS D, AND CLASS E AIRSPACE AREAS; AIRWAYS; ROUTES; AND REPORTING POINTS

1. The authority citation for 14 CFR part 71 continues to read as follows:

Authority: 49 U.S.C. 106(g), 40103, 40113, 40120; E.O. 10854, 24 FR 9565, 3 CFR, 1959–1963 Comp., p. 389.

§ 71.1 [Amended]

2. The incorporation by reference in 14 CFR 71.1 of Federal Aviation Administration Order 7400.9J, *Airspace Designations and Reporting Points*, dated August 31, 2001, and effective September 16, 2001, is amended as follows:

* * * * *

Paragraph 6005 Class E airspace extending upward from 700 feet or more above the surface of the earth.

* * * * *

AAL AK E5 Kodiak, AK [Revised]

Kodiak Airport, AK
(Lat. 57°45′00″ N., long. 152°29′38″ W.)
Kodiak VORTAC
(Lat. 57°46′30″ N., long. 152°20′23″ W.)

That airspace extending upward from 700 feet above the surface within a 6.8 mile radius of the Kodiak Airport, and within 5 miles south and 9 miles north of the 070° radial of the Kodiak VORTAC extending to 17 miles northeast of the VORTAC and within 8 miles north and 4 miles south of the Kodiak Localizer front course extending from the airport to 20.3 miles east of the airport and within 14 miles of the Kodiak VORTAC extending from the 358° radial clockwise to the 107° radial; and that airspace extending upward from 1,200 feet above the surface within lat. 57°57′06″ N, long. 152°45′00″ W to lat. 57°55′00″ N, long. 152°28′00″ W to lat. 57°53′00″ N, long. 152°27′06″ W to point of beginning and within 27 miles of the Kodiak VORTAC extending clockwise from the 023 to the 088 radial and within 8 miles north and 5 miles south of the Kodiak Localizer front course extending from the airport to 32 miles east of the airport.

* * * * *

Issued in Anchorage, AK, on July 24, 2002.

Trent S. Cummings,

Manager, Air Traffic Division, Alaskan Region.

[FR Doc. 02–19554 Filed 8–6–02; 8:45 am]

BILLING CODE 4910–13–P

DEPARTMENT OF TRANSPORTATION

Federal Aviation Administration

14 CFR Part 71

[Airspace Docket No. 02–AAL–03]

Revision of Class E Airspace; Nuiqsut, AK

AGENCY: Federal Aviation Administration (FAA), DOT.

ACTION: Final rule.

SUMMARY: This action revises Class E airspace at Nuiqsut, AK. Two new Standard Instrument Approach Procedures (SIAP) have been established for the Nuiqsut Airport. The existing Class E airspace at Nuiqsut is insufficient to contain aircraft executing the new SIAPs. This rule results in additional Class E airspace at Nuiqsut, AK.

EFFECTIVE DATE: 0901 UTC, October 3, 2002.

FOR FURTHER INFORMATION CONTACT: Derril Bergt, AAL–538, Federal Aviation Administration, 222 West 7th Avenue, Box 14, Anchorage, AK 99513–7587; telephone number (907) 271–2796; fax: (907) 271–2850; e-mail: *Derril.CTR.Bergt@faa.gov.* Internet address: *http://www.alaska.faa.gov/at* or at address *http://162.58.28.41/at.*

SUPPLEMENTARY INFORMATION:

History

On April 23, 2002, a proposal to revise part 71 of the Federal Aviation Regulations (14 CFR part 71) to add to the Class E airspace at Nuiqsut, AK, was published in the **Federal Register** (67 FR 19710–19711). Due to the development of two new SIAPs; Area Navigation-Global Positioning System (RNAV GPS) Runway 04, and RNAV (GPS) Runway 22, additional Class E airspace is necessary to ensure that IFR operations remain within controlled airspace at the Nuiqsut, AK Airport. Interested parties were invited to participate in this rulemaking proceeding by submitting written comments on the proposal to the FAA. No public comments have been received, thus, the rule is adopted as written.

The area will be depicted on aeronautical charts for pilot reference. The coordinates for this airspace docket are based on North American Datum 83. The Class E airspace areas extending upward from 700 feet or more above the surface of the earth are published in paragraph 6005 of FAA Order 7400.9J. *Airspace Designations and Reporting Points,* dated August 31, 2001 and effective September 16, 2001 which is incorporated by reference in 14 CFR 71.1. The Class E airspace designation listed in this document will be revised subsequently in the Order.

The Rule

This revision to 14 CFR part 71 adds to the Class E airspace at Nuiqsut, Alaska. Additional Class E airspace is being created to contain aircraft executing the RNAV (GPS) Runway 04 and RNAV (GPS) Runway 22 SIAPs and will be depicted on aeronautical charts for pilot reference. The intended effect of this rule is to provide adequate controlled airspace for IFR operations at Nuiqsut Airport, Nuiqsut, Alaska.

The FAA has determined that this regulation only involves an established body of technical regulations for which frequent and routine amendments are necessary to keep them operationally current. It, therefore—(1) is not a ''significant regulatory action'' under Executive Order 12866; (2) is not a ''significant rule'' under DOT Regulatory Policies and Procedures (44 FR 11034; February 26, 1979); and (3) does not warrant preparation of a regulatory evaluation as the anticipated impact is so minimal. Since this a routine matter that will only affect air traffic procedures and air navigation, it is certified that this rule will not have a significant economic impact on a substantial number of small entities under the criteria of the Regulatory Flexibility Act.

List of Subjects in 14 CFR Part 71

Airspace, Incorporation by reference, Navigation (air).

Adoption of the Amendment

In consideration of the foregoing, the Federal Aviation Administration amends 14 CFR part 71 as follows:

PART 71—DESIGNATION OF CLASS A, CLASS B, CLASS C, CLASS D, AND CLASS E AIRSPACE AREAS; AIRWAYS; ROUTES; AND REPORTING POINTS

1. The authority citation for 14 CFR part 71 continues to read as follows:

Authority: 49 U.S.C. 106(g), 40103, 40113, 40120; E.O. 10854, 24 FR 9565, 3 CFR, 1959–1963 Comp., p. 389.

§ 71.1 [Amended]

2. The incorporation by reference in 14 CFR 71.1 of Federal Aviation Administration Order 7400.9J, *Airspace Designations and Reporting Points*, dated August 31, 2001, and effective

September 16, 2001, is amended as follows:

* * * * *

Paragraph 6005 Class E airspace extending upward from 700 feet or more above the surface of the earth.

* * * * *

AAL AK E5 Nuiqsut, AK [Revised]

Nuiqsut Airport, AK
(Lat. 70°12′36″ N., long. 151°00′20″ W.)

That airspace extending upward from 700 feet above the surface within a 6.5 mile radius of the Nuiqsut Airport, and that airspace extending upward from 1,200 feet above the surface from 13 miles north and 8 miles south of the 249° bearing from the airport to 29 miles southwest, to 19 miles northwest of the airport on the 314° bearing clockwise to the 352° bearing 13 miles north of the airport.

* * * * *

Issued in Anchorage, AK, on July 24, 2002.

Trent S. Cummings,

Manager, Air Traffic Division, Alaskan Region.

[FR Doc. 02–19553 Filed 8–6–02; 8:45 am]

BILLING CODE 4910–13–P

DEPARTMENT OF TRANSPORTATION

Federal Aviation Administration

14 CFR Part 71

[Airspace Docket No. 02–AAL–02]

Revision of Class E Airspace; Buckland, AK

AGENCY: Federal Aviation Administration (FAA), DOT.

ACTION: Final rule.

SUMMARY: This action revises Class E airspace at Buckland, AK. Three new Standard Instrument Approach Procedures (SIAP) have been established for the Buckland Airport. The existing Class E airspace at Buckland is insufficient to contain aircraft executing the new SIAPs. This rule results in additional Class E airspace at Buckland, AK.

EFFECTIVE DATE: 0901 UTC, October 3, 2002.

FOR FURTHER INFORMATION CONTACT: Derril Bergt, AAL–538, Federal Aviation Administration, 222 West 7th Avenue, Box 14, Anchorage, AK 99513–7587; telephone number (907) 271–2796; fax: (907) 271–2850; email: *Derril.CTR.Bergt@faa.gov.* Internet address: *http://www.alaska.faa.gov/at* or at address *http://162.58.28.41/at.*

SUPPLEMENTARY INFORMATION:

History

On April 23, 2002, a proposal to revise part 71 of the Federal Aviation Regulations (14 CFR part 71) to add to the Class E airspace at Buckland, AK, was published in the **Federal Register** (67 FR 19711–19713). Due to the development of three new SIAPs, Area Navigation-Global Positioning System (RNAV GPS) Runway 28, Non-directional Radio Beacon/Distance Measuring Equipment (NDB/DME) Runway 10, and NDB/DME Runway 28, additional Class E airspace is necessary to ensure that IFR operations remain within controlled airspace at the Buckland, AK Airport. Interested parties were invited to participate in this rulemaking proceeding by submitting written comments on the proposal to the FAA. No public comments have been received, thus, the rule is adopted as written.

The area will be depicted on aeronautical charts for pilot reference. The coordinates for this airspace docket are based on North American Datum 83. The Class E airspace areas extending upward from 700 feet or more above the surface of the earth are published in paragraph 6005 of FAA Order 7400.9J. *Airspace Designations and Reporting Points,* dated August 31, 2001 and effective September 16, 2001 which is incorporated by reference in 14 CFR 71.1. The Class E airspace designation listed in this document will be revised subsequently in the Order.

The Rule

This revision to 14 CFR part 71 adds to the Class E airspace at Buckland, Alaska. Additional Class E airspace is being created to contain aircraft executing the RNAV (GPS) Runway 28, NDB/DME Runway 28 and NDB/DME Runway 10 SIAPs and will be depicted on aeronautical charts for pilot reference. The intended effect of this rule is to provide adequate controlled airspace for IFR operations at Buckland Airport, Buckland, Alaska.

The FAA has determined that this regulation only involves an established body of technical regulations for which frequent and routine amendments are necessary to keep them operationally current. It, therefore—(1) is not a ''significant regulatory action'' under Executive Order 12866; (2) is not a ''significant rule'' under DOT Regulatory Policies and Procedures (44 FR 11034; February 26, 1979); and (3) does not warrant preparation of a regulatory evaluation as the anticipated impact is so minimal. Since this a routine matter that will only affect air traffic procedures and air navigation, it is certified that this rule will not have a significant economic impact on a substantial number of small entities under the criteria of the Regulatory Flexibility Act.

List of Subjects in 14 CFR Part 71

Airspace, Incorporation by reference, Navigation (air).

Adoption of the Amendment

In consideration of the foregoing, the Federal Aviation Administration amends 14 CFR part 71 as follows:

PART 71— DESIGNATION OF CLASS A, CLASS B, CLASS C, CLASS D, AND CLASS E AIRSPACE AREAS; AIRWAYS; ROUTES; AND REPORTING POINTS

1. The authority citation for 14 CFR part 71 continues to read as follows:

Authority: 49 U.S.C. 106(g), 40103, 40113, 40120; E.O. 10854, 24 FR 9565, 3 CFR, 1959–1963 Comp., p. 389.

§ 71.1 [Amended]

2. The incorporation by reference in 14 CFR 71.1 of Federal Aviation Administration Order 7400.9J, *Airspace Designations and Reporting Points,* dated August 31, 2001, and effective September 16, 2001, is amended as follows:

* * * * *

Paragraph 6005 Class E airspace extending upward from 700 feet or more above the surface of the earth.

* * * * *

AAL AK E5 Buckland, AK [Revised]

Buckland Airport, AK
(Lat. 65°58′56″ N., long. 161°09′07″ W.)

That airspace extending upward from 700 feet above the surface within a 6.5 mile radius of the Buckland Airport; and that airspace extending upward from 1,200 feet above the surface from 65°28′30″ N, 159°00′00″ W to 65°57′45″ N, 162°11′00″ W to 66°16′00″ N, 162°15′00″ W to 66°40′00″ N, 161°03′00″ W to 66°35′00″ N, 160°27′00″ W to 66°11′00″ N, 159°00′00″ W to point of beginning.

* * * * *

Issued in Anchorage, AK, on July 24, 2002.

Trent S. Cummings,

Manager, Air Traffic Division, Alaskan Region.

[FR Doc. 02–19552 Filed 8–6–02; 8:45 am]

BILLING CODE 4910–13–P

DEPARTMENT OF TRANSPORTATION

Federal Aviation Administration

14 CFR Part 71

[Airspace Docket No. 02–AEA–08]

Amendment of Class E Airspace, Dunkirk, NY

AGENCY: Federal Aviation Administration (FAA) DOT.

ACTION: Final rule; request for comments.

SUMMARY: This action amends the description of the Class E airspace designated for Dunkirk, NY. Angola airport has been closed and the Standard Instrument Approach Procedures (SIAP) for this airport have been canceled. Class E airspace for Angola Airport is no longer needed.

EFFECTIVE DATE: October 3, 2002.

Comment Date: Comments must be received on or before August 15, 2002.

ADDRESSES: Send comments on the rule in triplicate to: Manager, Airspace Branch, AEA–520, Docket No. 02–AEA–08, FAA Eastern Region, 1 Aviation Plaza, Jamaica, NY 11434–4890.

The official docket may be examined in the Office of the Regional Counsel, AEA–7, FAA Eastern Region, 1 Aviation Plaza, Jamaica, NY 11434–4809; telephone: (718) 553–3255.

An informal docket may also be examined during normal business hours at the address listed above.

FOR FURTHER INFORMATION CONTACT: Mr. Francis Jordan, Airspace Specialist, Airspace Branch, AEA–520, Air Traffic Division, Eastern Region, Federal Aviation Administration, 1 Aviation Plaza, Jamaica, NY 11434–4809, telephone: (718) 553–4521.

SUPPLEMENTARY INFORMATION: Although this action is a final rule, which involves the amendment of the Class E airspace at Dunkirk, NY, by revoking that airspace designated for Angola Airport, and was not preceded by notice and public procedure, comments are invited on the rule. This rule will become effective on the date specified in the **DATES** section. However, after the review of any comments and, if the FAA finds that further changes are appropriate, it will initiate rulemaking proceeding to extend the effective date or to amend the regulation.

Comments that provide the factual basis supporting the views and suggestions presented are particularly helpful in evaluating the effects of the rule, and in determining whether additional rulemaking is required. Comments are specifically invited on the overall regulatory, aeronautical, economic, environmental, and energy-related aspects of the rule which might suggest the need to modify the rule.

The Rule

This amendment to Part 71 of the Federal Aviation Regulations (14 CFR part 71) changes the description of the Class E airspace at Dunkirk, NY, by revoking that airspace designated for Angola Airport. The Angola airport has been closed and abandoned for aeronautical use. As a result the Angola Airport Class E airspace is no longer required for air safety. Class E airspace designations for airspace extending upward from 700 feet or more above the surface of the earth are published in paragraph 6005 of FAA Order 7400.9J, dated August 31, 2001, and effective September 16, 2001, which is incorporated by reference in 14 CFR 71.1. The Class E airspace designation listed in this document will be published subsequently in the Order.

Under the circumstances presented, the FAA concludes that there is a need to amend the description of the Class E airspace area at Dunkirk, NY to ensure public access to that airspace designated for the Angola Airport. Accordingly, since this action merely involves a change in the legal description of the Dunkirk, NY, Class E airspace, revoking that airspace designated for the Angola airport, notice and public procedure under 5 U.S.C. 553(b) are unnecessary. Furthermore, in order to incorporate this change into the next sectional chart and avoid confusion on the part of pilots, I find that good cause exists, pursuant to 5 U.S.C 553(d), for making this amendment effective as soon as possible.

The FAA has determined that this regulation only involves an established body of technical regulations for which frequent and routine amendments are necessary to keep them operationally current. Therefore, this regulation: (1) is not a ''significant regulatory action'' under Executive Order 12866; (2) is not a ''significant rule'' under DOT Regulatory Policies and Procedures (44 FR 11034; February 26, 1979); and (3) does not warrant preparation of a Regulatory Evaluation as the anticipated impact is so minimal. Since this is a routine matter that will only affect air traffic procedures and air navigation it is certified that this rule will not have significant economic impact on a substantial number of small entities under the criteria of the Regulatory Flexibility Act.

List of Subjects in 14 CFR Part 71

Airspace, Incorporated by reference, Navigation (air).

Adoption of the Amendment

In consideration of the foregoing, the Federal Aviation Administration amends 14 CFR Part 71 as follows:

PART 71—[AMENDED]

1. The authority citation for part 71 continues to read as follows:

Authority: 49 U.S.C. 106(g), 40103, 40113, 40120; E.O. 10854; 24 FR 9565, 3 CFR, 1959–1963 Comp., p. 389.

§ 71.1 [Amended]

2. The incorporation by reference in 14 CFR 71.1 of the Federal Aviation Administration Order 7400.9J, Airspace Designations and Reporting Points, dated August 31, 2001 and effective September 16, 2001, is amended as follows:

Paragraph 6005 Class E airspace areas extending from 700 feet or more above the surface of the earth.

* * * * *

AEA NY E5 Dunkirk, NY [Revised]

Chautauqua County/Dunkirk Airport, NY
(Lat. 42°29′36″ N, long. 79°16′19″ W)

That airspace extending upward from 700 feet above the surface within a 6.6-mile radius of Chautauqua County/Dunkirk Airport and within an 11.8-mile radius of the airport extending clockwise from a 022° to a 264° bearing from the airport.

* * * * *

Issued in Jamaica, New York on July 16, 2002.

F.D. Hatfield,

Manager, Air Traffic Division, Eastern Region.

[FR Doc. 02–19677 Filed 8–6–02; 8:45 am]

BILLING CODE 4910–13–M

DEPARTMENT OF COMMERCE

National Oceanic and Atmospheric Administration

15 CFR Part 902

50 CFR Part 622

[Docket No. 011018254–2153–02; I.D. 071001F]

RIN 0648–AO51

Fisheries of the Caribbean, Gulf of Mexico, and South Atlantic; Shrimp Fishery of the Gulf of Mexico; Amendment 11

AGENCY: National Marine Fisheries Service (NMFS), National Oceanic and Atmospheric Administration (NOAA), Commerce.

ACTION: Final rule.

SUMMARY: NMFS issues this final rule to implement Amendment 11 to the Fishery Management Plan for the Shrimp Fishery of the Gulf of Mexico (Amendment 11), as prepared and submitted by the Gulf of Mexico Fishery Management Council. This final rule requires owners or operators of all vessels harvesting shrimp in the exclusive economic zone of the Gulf of Mexico (Gulf EEZ) to obtain a commercial vessel permit for Gulf shrimp; prohibits the use of traps to harvest royal red shrimp in the Gulf EEZ; and prohibits the transfer of royal red shrimp at sea. In addition, NMFS informs the public of the approval by the Office of Management and Budget (OMB) of the collection-of-information requirements contained in this final rule and publishes the OMB control numbers for those collections. The permit requirement will provide an accurate and efficient method of identifying and quantifying the number of vessels in the Gulf EEZ shrimp fishery. The prohibition of the use of traps for royal red shrimp is intended to prevent gear conflict and potential overfishing. The prohibition on transfer of royal red shrimp at sea is intended to enhance enforceability of the prohibition on use of traps in the fishery.

DATES: This final rule is effective September 6, 2002, except for the addition of § 622.4(a)(2)(xi) and the revision of § 622.6(a)(1)(i) which are effective December 5, 2002.

ADDRESSES: Comments regarding the collection-of-information requirements contained in this final rule should be sent to Robert Sadler, Southeast Regional Office, NMFS, 9721 Executive Center Drive N., St. Petersburg, FL 33702, and to the Office of Information and Regulatory Affairs, Office of Management and Budget (OMB), Washington, DC 20503 (Attention: NOAA Desk Officer).

FOR FURTHER INFORMATION CONTACT: Dr. Steve Branstetter, telephone: 727–570–5305, fax: 727–570–5583, e-mail: Steve.Branstetter@noaa.gov.

SUPPLEMENTARY INFORMATION: The fishery for shrimp in the Gulf EEZ is managed under the Fishery Management Plan for the Shrimp Fishery of the Gulf of Mexico (FMP). The FMP was prepared by the Gulf of Mexico Fishery Management Council (Council), approved by NMFS, and implemented under the authority of the Magnuson-Stevens Fishery Conservation and Management Act (Magnuson-Stevens Act) by regulations at 50 CFR part 622.

NMFS approved Amendment 11 on October 17, 2001. On February 25, 2002, NMFS published a proposed rule to implement Amendment 11 and requested comments on the proposed rule through April 11, 2002 (67 FR 8503). The rationale for the measures in Amendment 11 is provided in the preamble to the proposed rule and is not repeated here.

Comments and Responses

Comments received during public comment periods for the Amendment and the proposed rule are considered together in this final rule. Comments opposing the permitting system included a minority report submitted by two members of the Council, and five letters from industry representatives (two of which were submitted during both public comment periods). Comments supporting the permitting system included letters from three environmental organizations (one organization submitted a comment under each comment period). Additionally, NMFS received several hundred form letters stating general support for the permitting action.

Vessel Permits

Comment 1: Opposing views were received regarding the need for a Federal shrimp vessel permit system as a mechanism to collect information regarding the shrimp fishery. Two individuals and one organization opposed the proposed permitting system noting that information was available through existing state and Federal programs to determine vessels and effort in the exclusive economic zone (EEZ) of the Gulf of Mexico. Specific issues identified in these letters are addressed as separate comments herein.

In contrast, three environmental organizations submitted comments and several hundred form letters were received stating general support for the permitting action as a means to gather information concerning bycatch in the fishery and as an enforcement tool that would enhance sea turtle conservation. Two of the environmental groups provided detailed comment in support of their position, noting that the existing Federal records include information compiled by port agents over several years, which may not be representative for the current year. Also, state licensing files do not necessarily distinguish between vessels that fish in state and Federal waters and when compiled among states would include duplicate records for those vessels licensed in multiple states.

Response: Data collection and identification systems do exist through either state or Federal systems, but none is comprehensive or specifically identifies shrimp fishing vessels that are actively working in the EEZ. The NMFS-maintained Shrimp Landings File (SLF) represents landings by individual shrimp vessels over the course of a year, but does not necessarily indicate whether the effort occurred in state or Federal waters. The purpose of the NMFS Vessel Operating Units File (VOUF) is to maintain a record of vessel characteristics (i.e., length, age, horsepower, etc.), for all active shrimp fishing vessels; this file may include several vessels that are not currently active in the fishery. Thus, the VOUF contains a list of all vessels found in the SLF, plus vessels fishing in the inshore areas, and vessels suspected to still be active in the fishery. Neither of these data files provides an indication of whether the vessels fish in the EEZ. Similarly, state licensing files or trip tickets may indicate active fishing vessels, but these files will not provide information on whether a vessel fishes in state or Federal waters, or both. In some instances, these licenses are not specific to a fishery, and, thus, they do not readily identify shrimp fishing vessels as opposed to vessels operating in other fisheries. Trip tickets are not uniform across the Gulf states, and the GulfFIN clearinghouse that will standardize this information is still in development. Additionally, these data collection systems, designed for different purposes, are not standardized as to the information that is collected. The immediate benefit of a Federal permit system is to accurately identify the existing, active (on an annual basis) universe of shrimp fishing vessels in the Gulf of Mexico EEZ.

A Federal permit system that creates a complete listing of all active vessels fishing in the EEZ is a prerequisite tool for any statistically robust data collection program intended to canvass or randomly sample the activities of the shrimp fishery in the EEZ. Previous data collection programs have been hampered by the inability to specifically identify the universe of vessels fishing for shrimp in the Gulf EEZ. Without this information, sampling programs have depended on non-random sampling. A more robust analysis of the shrimp fishery is only possible through stratified random sampling of the existing fleet, and that kind of sampling is only possible where the specific vessels are readily identifiable.

The ability to sanction permits is an enforcement tool and could apply for violations of certain statutes and where

there is an unpaid and overdue civil penalty or criminal fine imposed under any marine resource law administered by the Secretary of Commerce. Additional details concerning this specific issue are addressed in the response to Comment 11.

Comment 2: The Secretary of Commerce has the authority to implement measures that are needed to collect data under section 401 of the Magnuson-Stevens Act. Two comments suggested that a Gulf-wide vessel registration system be implemented under the auspices of the Gulf States Marine Fisheries Commission (Commission).

Response: In regards to the vessel registration system proposal required in Section 401 of the Magnuson-Stevens Act, NMFS proposed utilizing the Vessel Identification System that is under development by the US Coast Guard (USCG). However, the USCG is still reviewing options to implement this system, and its implementation is not anticipated in the near future. Trip tickets are not uniform across the Gulf states, and the GulfFIN clearinghouse under development by the Commission will provide a standardization of this information. This program will greatly enhance the overall data collection systems for Gulf of Mexico fisheries, but it will not identify the number of shrimp vessels fishing in the EEZ.

Comment 3: The shrimp fishery has been participating in a data collection program for several years. The Congressionally mandated Incidental Harvest Research Program collected substantial amounts of information regarding the characterization of the catch and bycatch species found in shrimp trawls. That program led to additional data collection efforts currently underway using observers and logbooks to document the port of departure, fishing time, catch, and the location of fishing effort.

Response: The industry contributions to collecting data on the catch and effort in the shrimp fishery were an integral part of the development of Council actions to implement Amendment 9 to the Gulf shrimp FMP. Continuing data collection efforts will benefit additional management decisions. However, without a method to identify the universe of vessels active in the fishery, these programs have relied on voluntary participation by the shrimp fleet. The results of NMFS' 1992–1996 Incidental Harvest Research Program, as well as the Council's subsequent actions implemented in Amendment 9 that were based on the results of that program, have been questioned because the sampling was not conducted through a stratified random sampling effort across the various strata of vessels. Similarly, during the summer 1998 Red Snapper/Shrimp Research Program, the Southeast Fisheries Science Center attempted to implement a trial logbook program. That attempt was only partially successful because it failed to reach many of the intended participants in a timely manner. These programs used the available information systems to identify potential participants, but even in combination, these other information systems do not directly provide current information on the number and location of shrimp fishing vessels operating in the EEZ. A major benefit of a Federal permit system is in providing opportunity to design statistically robust data collection programs to benefit management of the fishery resources of the region.

Comment 4: Amendment 11 does not state specifically what data are missing resulting in the need for a new data collection program. Data on fishing effort and catch are already collected by NMFS port agents and state agencies.

Response: Amendment 11 does not propose to implement a biological or fishery data collection system; it proposes to implement a vessel permitting system, which by itself is a data collection tool to identify those shrimp vessels actively fishing in the EEZ each year. With a permit system as a source to identify a representative stratified random sample of shrimp vessels, research to collect biological, fishery, social, and economic data on the fishery could be accomplished using observers, logbooks, vessel monitoring systems or other data collection methods. Once the Agency has more accurately determined the number of fishery participants through the permit system, then appropriate methods of data collection will be determined. Anticipated improvements from the permitting and subsequent sampling procedures would include more precise red snapper bycatch estimations and more accurate determinations of economic and community impacts. Information collected under such future programs would aid in the formulation of sound management measures for the shrimp fishery and those finfish fisheries that are affected by bycatch and bycatch mortality arising from the shrimp fishery. See also response to comment 10.

Comment 5: Amendment 11 does not state what supporting documents will be required to obtain a Federal fishing permit. There is no discussion of the conditions by which NMFS could reject the issuance or renewal of such a permit. Failure or delay in issuing or renewing a Federal permit in a timely manner because applications are incomplete or have a lack of supporting documentation could have a substantial economic impact on the vessel owner. Automatic renewal of permits should be issued with expiration dates spread evenly over the year, rather than with a single expiration date, to avoid administrative delays. Electronic (internet-based) permitting and payment of permitting fees via credit cards would additionally speed up the process.

Response: The conditions for obtaining and renewing a shrimp vessel permit, including the time frames for issuance, are a NMFS administrative procedure, and the Councils usually defer specific application procedures to NMFS. The proposed application procedures and requirements were described in the proposed rule (67 FR 8503, February 25, 2002). Current regulations (50 CFR 622.4(b)(3) and 50 CFR 622.4(h)) do provide the information that needs to be submitted to obtain and renew vessel permits and address the timing for applying and renewing permits. The procedures for shrimp permit applications will be based on these existing regulations.

Regarding the comments on internet-based permit issuance and fee payment, NMFS currently is developing the resources and technological capability for these opportunities. NMFS is actively examining the feasibility of changing to such a system to improve customer service without adversely affecting the accuracy and usefulness of the permit database.

Comment 6: Given that the permits would be non-transferrable, what would happen if the owner sold his permitted vessel?

Response: Open-access permits, such as the shrimp vessel permits, do not require transfer provisions. Once the vessel transaction is complete, the new owner may simply apply to obtain a new permit without relying on the more lengthy permit transfer process. As a result, the rule does not provide for permit transfers.

Comment 7: Without qualifying criteria the number of permits issued may be inflated due to speculation or part-time fishing in the EEZ, thus rendering the database unusable as a measure of effort.

Response: The database generated by the issuance of vessel permits is not intended as a direct measure of effort. The database will provide an enumeration of the vessels that either fish or have the intent to fish in the EEZ on an annual basis. However, by using the identification information from a permit system, those vessels can then be

contacted to gather the information necessary to estimate fishing effort. (See also the responses to Comments 3 and 4).

Comment 8: National standard 5 states in part that ''conservation and management measures shall, where practicable, consider efficiency in the utilization of fishery resources...''. Efficiency in the utilization of fishery resources is enhanced through minimizing the regulatory burden on the harvesters. This measure will be costly to implement, more complex than the existing system, and will result in less rather than more efficiency.

Response: NMFS disagrees that this would be a complex or costly regulatory burden. This amendment includes a collection-of-information requirement subject to the Paperwork Reduction Act; namely, a requirement to submit an application for a Gulf shrimp commercial vessel permit. In addition, NMFS revised the Multiple Fishery Vessel Application (Application) that will be used for the Gulf shrimp permit and is used for other fishery permits issued by the NMFS Southeast Regional Office. NMFS added data fields for the applicant's birth date, street address, and county; vessel net tonnage; vessel gross tonnage; and vessel hull identification number. The collection of this information has been approved by the Office of Management and Budget, OMB control number 0648–0205. The public reporting burden for the collection of information related to the Gulf shrimp permit application and the additional data elements on the Application are estimated to average 20 minutes per response. This estimate of the public reporting burden includes the time for reviewing instructions, searching existing data sources, gathering and maintaining the data needed, and completing and reviewing the collections of information.

Comment 9: National standard 6 states that ''conservation and management measures shall take into account and allow for variations among, and contingencies in, fishery, fishery resources, and catches.'' Vessel permits are almost exclusively used as fishery management tools in fisheries where the intent is to control fishing effort to protect and rebuild stocks. This is not the case in the shrimp fishery. Shrimping in the EEZ is not a threat to shrimp stocks, and good fishery management practices do not require the level of effort scrutiny needed to manage other fisheries.

Response: Mandatory vessel permitting proved to be an effective way of obtaining information on the number of potentially active vessels and participants in other commercial and for-hire fisheries operating in the Gulf, including the reef fish and coastal migratory pelagics fisheries. These data combined with logbook reporting, observer reports, and other surveys provided managers with essential information on effort, catch, bycatch, and other important parameters regarding these fisheries. Having a known universe of vessels operating in the Gulf shrimp fishery will help provide the same opportunities for scientists and managers to collect data on effort, catch, bycatch, and other important parameters of both targeted shrimp stocks, as well as bycatch species that may or may not be under separate management regimes.

Comment 10: National standard 7 states that ''conservation and management measures shall, where practicable, minimize cost and avoid unnecessary duplication.'' The estimated cost for implementation of shrimp permits is an unjustified burden on the taxpayers of this country and to the shrimping industry. The current data collection systems contain the information necessary to manage the fishery; therefore an additional permitting requirement will increase cost and create unnecessary duplication.

Response: Amendment 11 states that the public burden associated with vessel permits and data collection are estimated to be approximately $350,000 per year, based on an anticipated issuance of 7,000 permits at a cost of $50 per permit. NMFS costs associated with the issuance of these permits is estimated to be $350,000. The funds generated from permit fees are not retained by NMFS and revert to the General Treasury, thus offsetting any public (taxpayer) burden. There are no expected cost increases to be borne by state and other local governments from implementing a vessel permitting system for the shrimp fishery.

NMFS has assessed both the costs and benefits of the intended regulations and has determined that this action is justified. The permit cost of $50 per application, which represents the cost to the agency in processing and issuing the permit, represents less than one percent of the profits realized by the average Gulf of Mexico shrimp vessel, and burden time (estimated at 20 minutes per permit application) is minimal. The increased scientific information that can be collected by using the permit system to randomly sample the shrimp fleet will provide a greater benefit to the various Gulf of Mexico fisheries as a whole than the cost to develop the permit system. NMFS also does not believe that the permit system is duplicative and addressed its rationale for that finding in the Response to Comment 1.

Comment 11: National standard 8 states that ''Conservation and management measures shall....take into account the importance of fishery resources to fishing communities in order to (a) provide for the sustained participation of such communities, and (b) to the extent practicable, minimize adverse economic impacts on such communities.'' The shrimp fishery in the Gulf of Mexico is the most valuable fishery and involves the largest number of participants. Consequently, more people are affected by regulations on this fishery. Because of the many regulations applicable to this fishery under both the Endangered Species Act (ESA) and the Magnuson-Stevens Act (turtle-excluder-devices (TEDs), BRDs, closed areas, closed seasons, etc.), violations are proportionally more costly to shrimp vessel owners as opposed to other finfish fisheries. Additionally, the Gulf shrimp fishery consists of a large number of vessels that are not owner-operated. Given that an owner has little control over the operator while the vessel is at sea, owners could be economically ruined by operators who may violate regulations leading to a permit sanction.

Response: Participants in other fisheries are subject to requirements under more than one statute, such as the Magnuson-Stevens Act, Endangered Species Act, and/or the Marine Mammal Protection Act. For example, summer flounder fishermen are similarly required to use TEDs. As such, participants in the

Gulf shrimp fishery will not be subject to greater or disproportionate costs as a result of regulatory violations as compared to other fisheries. So long as permit holders remain in compliance with applicable law, they will not be subject to any additional economic burden. NMFS cannot insulate owners from liability, as the Magnuson-Stevens Act explicitly establishes liability for any person, including owners and operators of vessels involved in fisheries violations, as well as liability for the vessel, its cargo, and appurtenances.

Royal Red Shrimp Traps

Comment 1: One comment suggested that NMFS should more carefully consider alternative gears to trawls for shrimp fishing, noting that trawls are identified as some of the most destructive fishing gear currently in use. Given that the royal red shrimp fishery is prosecuted in deep water, and that deep water corals have long life spans and infrequent recruitment, trawls could severely damage deep water reefs.

The value of an alternative to trawls would depend on the intensity of fishing in a particular area, but should be considered.

Response: At this time, NMFS agrees with the Council's position that the prohibition of traps in the royal red shrimp fishery is beneficial. Allowing the use of traps could result in gear conflicts and entanglements that could compromise vessel safety considering the depth of water where this fishery is prosecuted. Additionally, the existing trawl fishery has been harvesting royal red shrimp at a level near maximum-sustainable-yield for several years. The addition of a new gear and additional harvesting efforts could lead to overfishing. NMFS recognizes the potential impacts to habitat from trawling operations, and should the Council choose to change allowable gears in this fishery, at a later time, NMFS would give careful consideration to the option.

Classification

On October 17, 2001, NMFS approved Amendment 11 based on a determination that it was consistent with the national standards of the Magnuson-Stevens Act and other applicable law. In making that determination, NMFS took into account the data, views, and comments received during the comment period on Amendment 11.

This final rule has been determined to be significant for purposes of Executive Order 12866.

The Chief Counsel for Regulation of the Department of Commerce has certified to the Chief Counsel for Advocacy of the Small Business Administration that the proposed rule for this action would not have a significant economic impact on a substantial number of small entities. The factual basis for the certification was published in the proposed rule. Comments were received regarding the economic impacts (see Comments 8, 10, and 11) but did not alter the determination and appropriateness of the certification. As a result, no regulatory flexibility analysis was prepared.

Notwithstanding any other provision of law, no person is required to respond to, nor shall a person be subject to a penalty for failure to comply with, a collection of information subject to the requirements of the Paperwork Reduction Act (PRA) unless that collection of information displays a currently valid Office of Management and Budget (OMB) control number.

This rule contains collection-of-information requirements subject to the PRA--namely, a requirement to submit an application for a Gulf shrimp commercial vessel permit and a vessel identification requirement. In addition, NMFS is revising the Multiple Fishery Vessel Application (Application) that will be used for the Gulf shrimp permit and is used for other fishery permits issued by the NMFS Southeast Regional Office. NMFS is adding data fields for the applicant's birth date, street address, and county; vessel net tonnage; vessel gross tonnage, and vessel hull identification number. The permit application requirement and the new application data field requirements have been approved by OMB, OMB control number 0648–0205. The public reporting burden for the collection of information related to the Gulf shrimp permit application and the additional data elements on the Application is estimated to average 20 minutes per response. This estimate of the public reporting burden includes the time for reviewing instructions, searching existing data sources, gathering and maintaining the data needed, and completing and reviewing the collections of information. The vessel identification requirement was previously approved by OMB under control number 0648–0358, with an estimated response time of 45 minutes total per vessel. Send comments regarding these burden estimates or any other aspect of the collection-of-information requirements, including suggestions for reducing the burden, to NMFS and to OMB (see **ADDRESSES**).

List of Subjects

15 CFR Part 902

Reporting and recordkeeping requirements.

50 CFR Part 622

Fisheries, Fishing, Puerto Rico, Reporting and recordkeeping requirements, Virgin Islands.

Dated: August 1, 2002.

William T. Hogarth,

Assistant Administrator for Fisheries, National Marine Fisheries Service.

For the reasons set out in the preamble, 15 CFR part 902 and 50 CFR part 622 are amended as follows:

15 CFR Chapter IX

PART 902—NOAA INFORMATION COLLECTION REQUIREMENTS UNDER THE PAPERWORK REDUCTION ACT: OMB CONTROL NUMBERS

1. The authority citation for part 902 continues to read as follows:

Authority: 44 U.S.C. 3501 *et seq.*

2. In § 902.1, the table in paragraph (b), under 50 CFR, is amended by revising the entry for 622.6 to read as follows:

§ 902.1 OMB Control numbers assigned pursuant to the Paperwork Reduction Act.

* * * * *

(b) * * *

CFR part of section where the information collectionrequirement is located	Current OMB control number (all numbers begin with 0648-)
* * * * *	
50 CFR	
* * * * *	
622.6	-0358 and -0359
* * * * *	

50 CFR Chapter VI

PART 622—FISHERIES OF THE CARIBBEAN, GULF, AND SOUTH ATLANTIC

3. The authority citation for part 622 continues to read as follows:

Authority: 16 U.S.C. 1801 *et seq.*

4. In § 622.2, the definition of ''Shrimp'' is revised to read as follows:

622.2 Definitions and acronyms.

* * * * *

Shrimp means one or more of the following species, or a part thereof:

(1) Brown shrimp, *Farfantepenaeus aztecus*.

(2) White shrimp, *Litopenaeus setiferus*.

(3) Pink shrimp, *Farfantepenaeus duorarum*.

(4) Royal red shrimp, *Hymenopenaeus robustus*.

(5) Rock shrimp, *Sicyonia brevirostris*.

(6) Seabob shrimp, *Xiphopenaeus kroyeri*.

* * * * *

5. In § 622.4, paragraph (a)(2)(xi) is added to read as follows:

§ 622.4 Permits and fees.

(a) * * *

(2) * * *

(xi) *Gulf shrimp*. For a person aboard a vessel to fish for shrimp in the Gulf EEZ or possess shrimp in or from the Gulf EEZ, a valid commercial vessel permit for Gulf shrimp must have been issued to the vessel and must be on board.

* * * * *

6. In § 622.6, paragraph (a)(1)(i) introductory text is revised to read as follows:

§ 622.6 Vessel and gear identification.

(a) * * *

(1) * * *

(i) *Official number.* A vessel for which a permit has been issued under § 622.4 must display its official number--

* * * * *

7. In § 622.31, paragraph (k) is added to read as follows:

§ 622.31 Prohibited gear and methods.

* * * * *

(k) *Traps for royal red shrimp in the Gulf EEZ and transfer at sea.* A trap may not be used to fish for royal red shrimp in the Gulf EEZ. Possession of a trap and royal red shrimp on board a vessel is prohibited. A trap used to fish for royal red shrimp in the Gulf EEZ may be disposed of in any appropriate manner by the Assistant Administrator or an authorized officer. In addition, royal red shrimp cannot be transferred in the Gulf EEZ, and royal red shrimp taken in the Gulf EEZ cannot be transferred at sea regardless of where the transfer takes place.

[FR Doc. 02–19977 Filed 8–6–02; 8:45 am]

BILLING CODE 3510–22–S

DEPARTMENT OF HEALTH AND HUMAN SERVICES

Food and Drug Administration

21 CFR Part 510

New Animal Drugs; Change of Sponsor's Name

AGENCY: Food and Drug Administration, HHS.

ACTION: Final rule.

SUMMARY: The Food and Drug Administration (FDA) is amending the animal drug regulations to reflect a change of sponsor's name from Blue Ridge Pharmaceuticals, Inc., to IDEXX Pharmaceuticals, Inc.

DATES: This rule is effective August 7, 2002.

FOR FURTHER INFORMATION CONTACT: Lonnie W. Luther, Center for Veterinary Medicine (HFV–101), Food and Drug Administration, 7500 Standish Pl., Rockville, MD 20855, 301–827–0209, e-mail: *lluther@cvm.fda.gov*.

SUPPLEMENTARY INFORMATION: Blue Ridge Pharmaceuticals, Inc., 4249–105 Piedmont Pkwy., Greensboro, NC 27410, has informed FDA of a change of name to IDEXX Pharmaceuticals, Inc. Accordingly, the agency is amending the regulations in 21 CFR 510.600(c)(1) and (c)(2) to reflect the change.

This rule does not meet the definition of ''rule'' in 5 U.S.C. 804(3)(A) because it is a rule of ''particular applicability.'' Therefore, it is not subject to the congressional review requirements in 5 U.S.C. 801–808.

List of Subjects in 21 CFR Part 510

Administrative practice and procedure, Animal drugs, Labeling, Reporting and recordkeeping requirements.

Therefore, under the Federal Food, Drug, and Cosmetic Act and under authority delegated to the Commissioner of Food and Drugs and redelegated to the Center for Veterinary Medicine, 21 CFR part 510 is amended as follows:

PART 510—NEW ANIMAL DRUGS

1. The authority citation for 21 CFR part 510 continues to read as follows:

Authority: 21 U.S.C. 321, 331, 351, 352, 353, 360b, 371, 379e.

2. Section 510.600 is amended in the table in paragraph (c)(1) by removing the entry for ''Blue Ridge Pharmaceuticals, Inc.'' and by alphabetically adding an entry for ''IDEXX Pharmaceuticals, Inc.''; and in the table in paragraph (c)(2) by revising the entry for ''065274'' to read as follows.

§ 510.600 Names, addresses, and drug labeler codes of sponsors of approved applications.

* * * * *

(c) * * *

(1) * * *

Firm name and address	Drug labeler code
* * * * *	* *
IDEXX Pharmaceuticals, Inc., 4249–105 Piedmont Pkwy., Greensboro, NC 27410	065274
* * * * *	* *

(2) * * *

Drug labeler code	Firm name and address
* * * * *	* *
065274	IDEXX Pharmaceuticals, Inc., 4249–105 Piedmont Pkwy., Greensboro, NC 27410
* * * * *	* *

Dated: July 19, 2002.

Andrew J. Beaulieu,

Acting Director, Office of New Animal Drug Evaluation, Center for Veterinary Medicine.

[FR Doc. 02–19906 Filed 8–6–02; 8:45 am]

BILLING CODE 4160–01–S

DEPARTMENT OF HEALTH AND HUMAN SERVICES

Food and Drug Administration

21 CFR Parts 510 and 529

New Animal Drugs; Change of Sponsor

AGENCY: Food and Drug Administration, HHS.

ACTION: Final rule.

SUMMARY: The Food and Drug Administration (FDA) is amending the animal drug regulations to reflect a change of sponsor for an approved new animal drug application (NADA) from DEC International, Inc., to Pharmacia & Upjohn Co.

DATES: This rule is effective August 7, 2002.

FOR FURTHER INFORMATION CONTACT: Lonnie W. Luther, Center for Veterinary Medicine (HFV–101), Food and Drug Administration, 7500 Standish Pl.,

Rockville, MD 20855, 301–827–0209, e-mail: lluther@cvm.fda.gov.

SUPPLEMENTARY INFORMATION: DEC International, Inc., 1919 South Stoughton Rd., P.O. Box 8050, Madison WI 53708–8050, has informed FDA that it has transferred ownership of, and all rights and interests in, NADA 141–200 for EAZI–BREED CIDR Progesterone Intravaginal Inserts to Pharmacia & Upjohn Co., 7000 Portage Rd., Kalamazoo, MI 49001–0199. Accordingly, the agency is amending the regulations in 21 CFR 529.1940 to reflect the transfer of ownership.

Following this change of sponsorship, DEC International, Inc., is no longer the sponsor of any approved application. Accordingly, 21 CFR 510.600(c) is being amended to remove the entries for DEC International, Inc.

This rule does not meet the definition of ''rule'' in 5 U.S.C. 804(3)(A) because it is a rule of ''particular applicability.'' Therefore, it is not subject to the congressional review requirements in 5 U.S.C. 801–808.

List of Subjects

21 CFR Part 510

Administrative practice and procedure, Animal drugs, Labeling, Reporting and recordkeeping requirements.

21 CFR Part 529

Animal drugs.

Therefore, under the Federal Food, Drug, and Cosmetic Act and under authority delegated to the Commissioner of Food and Drugs and redelegated to the Center for Veterinary Medicine, 21 CFR parts 510 and 529 are amended as follows:

PART 510—NEW ANIMAL DRUGS

1. The authority citation for 21 CFR part 510 continues to read as follows:

Authority: 21 U.S.C. 321, 331, 351, 352, 353, 360b, 371, 379e.

§ 510.600 [Amended]

2. Section 510.600 *Names, addresses, and drug labeler codes of sponsors of approved applications* is amended in the table in paragraph (c)(1) by removing the entry for ''DEC International, Inc.'' and in the table in paragraph (c)(2) by removing the entry for ''067080''.

PART 529—CERTAIN OTHER DOSAGE FORM NEW ANIMAL DRUGS

3. The authority citation for 21 CFR part 529 continues to read as follows:

Authority: 21 U.S.C. 360b.

§ 529.1940 [Amended]

4. Section 529.1940 *Progesterone intravaginal inserts* is amended in paragraph (b) by removing ''067080'' and by adding in its place ''000009''.

Dated: July 17, 2002.

Alan Rudman,

Acting Director, Office of New Animal Drug Evaluation, Center for Veterinary Medicine.

[FR Doc. 02–19862 Filed 8–6–02; 8:45 am]

BILLING CODE 4160–01–S

DEPARTMENT OF HEALTH AND HUMAN SERVICES

Food and Drug Administration

21 CFR Parts 510 and 558

New Animal Drugs; Change of Sponsor

AGENCY: Food and Drug Administration, HHS.

ACTION: Final rule.

SUMMARY: The Food and Drug Administration (FDA) is amending the animal drug regulations to reflect a change of sponsor for an approved abbreviated new animal drug application (ANADA) from Equi Aid Products, Inc., to Farnam Companies, Inc.

DATES: This rule is effective August 7, 2002.

FOR FURTHER INFORMATION CONTACT: Lonnie W. Luther, Center for Veterinary Medicine (HFV–101), Food and Drug Administration, 7500 Standish Pl., Rockville, MD 20855, 301–827–0209, e-mail: lluther@cvm.fda.gov.

SUPPLEMENTARY INFORMATION: Equi Aid Products, Inc., 1517 West Knudsen Dr., Phoenix, AZ 85027, has informed FDA that it has transferred ownership of, and all rights and interest in, ANADA 200–168 for CW 48 (pyrantel tartrate) Type A medicated article to Farnam Companies, Inc., 301 West Osborn, Phoenix, AZ 85013–3928. Accordingly, the agency is amending the regulations in § 558.485 (21 CFR 558.485) to reflect the transfer of ownership.

Following this change of sponsorship, Equi Aid Products, Inc., is no longer the sponsor of any approved application. Accordingly, § 510.600(c) is amended to remove the entries for Equi Aid Products, Inc.

This rule does not meet the definition of ''rule'' in 5 U.S.C. 804(3)(A) because it is a rule of ''particular applicability.'' Therefore, it is not subject to the congressional review requirements in 5 U.S.C. 801–808.

List of Subjects

21 CFR Part 510

Administrative practice and procedure, Animal drugs, Labeling, Reporting =and recordkeeping requirements.

21 CFR Part 558

Animal drugs, Animal feeds.

Therefore, under the Federal Food, Drug, and Cosmetic Act and under authority delegated to the Commissioner of Food and Drugs and redelegated to the Center for Veterinary Medicine, 21 CFR parts 510 and 558 are amended as follows:

PART 510—NEW ANIMAL DRUGS

1. The authority citation for 21 CFR part 510 continues to read as follows:

Authority: 21 U.S.C. 321, 331, 351, 352, 353, 360b, 371, 379e.

§ 510.600 [Amended]

2. Section 510.600 *Names, addresses, and drug labeler codes of sponsors of approved applications* is amended in the table in paragraph (c)(1) by removing the entry for ''Equi Aid Products, Inc.'' and in the table in paragraph (c)(2) by removing the entry for ''062240''.

PART 558—NEW ANIMAL DRUGS FOR USE IN ANIMAL FEEDS

3. The authority citation for 21 CFR part 558 continues to read as follows:

Authority: 21 U.S.C. 360b, 371.

§ 558.485 [Amended]

4. Section 558.485 *Pyrantel tartrate* is amended in paragraph (b)(7) by removing '', 017135, and 062240'' and by adding in its place ''and 017135''.

Dated: July 17, 2002.

Alan Rudman,

Acting Director, Office of New Animal Drug Evaluation, Center for Veterinary Medicine.

[FR Doc. 02–19861 Filed 8–6–02; 8:45 am]

BILLING CODE 4160–01–S

DEPARTMENT OF HEALTH AND HUMAN SERVICES

Food and Drug Administration

21 CFR Part 520

Oral Dosage Form New Animal Drugs; Oxytetracycline Hydrochloride Soluble Powder

AGENCY: Food and Drug Administration, HHS.

ACTION: Final rule.

SUMMARY: The Food and Drug Administration (FDA) is amending the animal drug regulations to reflect approval of a supplemental abbreviated new animal drug application (ANADA) filed by Pennfield Oil Co. The supplemental ANADA provides for a zero-day preslaughter withdrawal time for use of oxytetracycline hydrochloride (HCl) soluble powder in the drinking water of swine.

DATES: This rule is effective August 7, 2002.

FOR FURTHER INFORMATION CONTACT: Lonnie W. Luther, Center for Veterinary Medicine (HFV–101), Food and Drug Administration, 7500 Standish Pl., Rockville, MD 20855, 301–827–0209, e-mail: lluther@cvm.fda.gov.

SUPPLEMENTARY INFORMATION: Pennfield Oil Co., 14040 Industrial Rd., Omaha, NE 68137, filed a supplement to ANADA 200–026 that provides for use of PENNOX 343 (oxytetracycline HCl) soluble powder for making medicated drinking water for the treatment of various bacterial diseases of livestock. The supplemental ANADA provides for a zero-day preslaughter withdrawal time after the use of the product in the drinking water of swine. The supplemental ANADA is approved as of April 10, 2002, and 21 CFR 520.1660d is amended to reflect the approval. The basis of approval is discussed in the freedom of information summary.

In accordance with the freedom of information provisions of 21 CFR part 20 and 514.11(e)(2)(ii), a summary of safety and effectiveness data and information submitted to support approval of this application may be seen in the Dockets Management Branch (HFA–305), Food and Drug Administration, 5630 Fishers Lane, rm. 1061, Rockville, MD 20852, between 9 a.m. and 4 p.m., Monday through Friday.

The agency had determined under 21 CFR 25.33(a)(1) that this action is of a type that does not individually or cumulatively have a significant effect on the human environment. Therefore, neither an environmental assessment nor an environmental impact statement is required.

This rule does not meet the definition of ''rule'' in 5 U.S.C. 804(3)(A) because it is a rule of ''particular applicability.'' Therefore, it is not subject to the congressional review requirements in 5 U.S.C. 801–808.

List of Subject in 21 CFR Part 520

Animal drugs.

Therefore, under the Federal Food, Drug, and Cosmetic Act and under authority delegated to the Commissioner of Food and Drugs and redelegated to the Center for Veterinary Medicine, 21 CFR part 520 is amended as follows:

PART 520—ORAL DOSAGE FORM NEW ANIMAL DRUGS

1. The authority citation for 21 CFR part 520 continues to read as follows:

Authority: 21 U.S.C. 360b.

2. Section 520.1660d is amended by revising the last sentence in paragraph (d)(1)(iii)(C) to read as follows:

§ 520.1660d Oxytetracycline hydrochloride soluble powder.

* * * * *

(d) * * *

(1) * * *

(iii) * * *

(C) * * * Administer up to 5 days; do not use for more than 5 consecutive days; withdraw zero days prior to slaughter those products sponsored by Nos. 046573, 053389, 057561, and 061133.

* * * * *

Dated: July 17, 2002.

Alan Rudman,

Acting Director, Office of New Animal Drug Evaluation, Center for Veterinary Medicine.

[FR Doc. 02–19864 Filed 8–6–02; 8:45 am]

BILLING CODE 4160–01–S

DEPARTMENT OF HEALTH AND HUMAN SERVICES

Food and Drug Administration

21 CFR Part 558

New Animal Drugs for Use in Animal Feeds; Oxytetracycline

AGENCY: Food and Drug Administration, HHS.

ACTION: Final rule.

SUMMARY: The Food and Drug Administration (FDA) is amending the animal drug regulations to reflect approval of two supplemental new animal drug applications (NADAs) filed by Phibro Animal Health, Inc., which provide for a zero-day preslaughter withdrawal time for use of oxytetracycline in swine feed.

DATES: This rule is effective August 7, 2002.

FOR FURTHER INFORMATION CONTACT: Steven D. Vaughn, Center for Veterinary Medicine (HFV–130), Food and Drug Administration, 7500 Standish Pl., Rockville, MD 20855, 301–827–7580, e-mail: *svaughn@cvm.fda.gov*.

SUPPLEMENTARY INFORMATION: Phibro Animal Health, 710 Rte. 46 East, suite 401, Fairfield, NJ 07004, filed supplements to NADA 8–804 for TM–50, TM–50D, TM–100, and TM–100D (oxytetracycline) Type A medicated articles and NADA 95–143 for OXTC (oxytetracycline) Type A medicated articles used for making medicated feeds for the treatment of various bacterial diseases of livestock. The supplemental NADAs provide for a zero-day withdrawal time prior to slaughter when Type C medicated feeds containing oxytetracycline are fed continuously to swine at a dosage of 10 milligrams per pound (mg/lb) of body weight for up to 14 days. The supplemental NADAs are approved as of April 29, 2002, and the regulations are amended in 21 CFR 558.450 to reflect the approval. The basis of approval is discussed in the freedom of information summaries.

In accordance with the freedom of information provisions of 21 CFR part 20 and 514.11(e)(2)(ii), summaries of safety and effectiveness data and information submitted to support approval of these applications may be seen in the Dockets Management Branch (HFA–305), Food and Drug Administration, 5630 Fishers Lane, rm. 1061, Rockville, MD 20852, between 9 a.m. and 4 p.m., Monday through Friday.

The agency has determined under 21 CFR 25.33(a)(1) that these actions are of a type that do not individually or cumulatively have a significant effect on the human environment. Therefore, neither an environmental assessment nor an environmental impact statement is required.

This rule does not meet the definition of ''rule'' in 5 U.S.C. 804(3)(A) because it is a rule of ''particular applicability.'' Therefore, it is not subject to the congressional review requirements in 5 U.S.C. 801–808.

List of Subjects in 21 CFR Part 558

Animal drugs, Animal feeds.

Therefore, under the Federal Food, Drug, and Cosmetic Act and under authority delegated to the Commissioner of Food and Drugs and redelegated to the Center for Veterinary Medicine, 21 CFR part 558 is amended as follows:

PART 558—NEW ANIMAL DRUGS FOR USE IN ANIMAL FEEDS

1. The authority citation for 21 CFR part 558 continues to read as follows:

Authority: 21 U.S.C. 360b, 371.

§ 558.450 [Amended]

2. Section 558.450 *Oxytetracycline* is amended in the table in paragraph (d)(1)(ix), in entries 4 and 5, under the ''Limitations'' column, by removing

''withdraw 5 d before slaughter'' and by adding in its place ''for No. 053389, withdraw 5 d before slaughter; for No. 066104, zero-day withdrawal''.

Dated: July 17, 2002.

Alan Rudman,

Acting Director, Office of New Animal Drug Evaluation, Center for Veterinary Medicine.

[FR Doc. 02–19905 Filed 8–6–02; 8:45 am]

BILLING CODE 4160–01–S

DEPARTMENT OF TRANSPORTATION

Coast Guard

33 CFR Parts 6 and 125

[USCG–2002–12917]

Maritime Identification Credentials

AGENCY: Coast Guard, DOT.

ACTION: Clarification of regulation.

SUMMARY: The Coast Guard brings to the public's attention, clarification of the identification credentials that would be acceptable to the Commandant under 33 CFR 125.09(f), for access to waterfront facilities and to port and harbor areas, including the vessels and harbor craft in them. The Coast Guard has authority and the rules in place for this measure. As specified in 33 CFR 6.10–5, 125.15, and 125.53, such credentials—in addition to those acceptable under 33 CFR 125.09(a)–(e)—can, at a minimum, be laminated (or otherwise secured against tampering), contain the full name and a current photograph of the person, and bear the name of the issuing authority.

DATES: This clarification is effective on September 6, 2002.

FOR FURTHER INFORMATION CONTACT: For questions on this notice, call Mr. Gerald Miante, Program Manager, Maritime Personnel Qualification Division, Coast Guard Headquarters, at (202) 267–0229. For questions on viewing materials already in the docket, call Ms. Dorothy Beard, Chief, Dockets, Department of Transportation, at 202–366–5149.

SUPPLEMENTARY INFORMATION:

Public Meetings

Apublic meeting concerning initiatives toward international maritime security was held on January 3, 2002 (see **Federal Register** of December 14, 2001 [66 FR 64898]), at Coast Guard Headquarters, Washington, DC. A workshop concerning National Maritime Security was held on January 28–29, 2002 (see **Federal Register** of January 16, 2002 [66 FR 2271]), in Washington, DC, to discuss issues of domestic maritime security.

We are not receiving comments in response to this document because it simply clarifies existing requirements. You may see materials from the meeting and workshop, including our responses to comments we did receive, on the Internet at *http://dms.dot.gov* under docket number USCG–2002–11137.

Background

On September 11, 2001, acts of terrorism were committed against the United States in New York, Virginia, and Pennsylvania. In light of these attacks, the security of all modes of transportation is being reevaluated. Under the provisions of Title 33, Code of Federal Regulations (33 CFR), parts 6 and 125, the Coast Guard has the authority and the rules in place to require identification credentials for access to waterfront facilities and to port and harbor areas, including vessels and harbor craft in them. This notice serves to announce a clarification of these rules and serves to direct the public's attention to 33 CFR 125.09(f) authorizing the Commandant of the Coast Guard to require approved identification credentials.

In the week after September 11, the Secretary of the Department of Transportation (SECDOT) established the National Infrastructure Security Committee (NISC) to evaluate security in the surface modes of transportation and to provide recommendations for improvement. To reach that goal, the NISC created six ''Direct-Action Groups'' (DAGs) to generally examine each mode of transportation; and, pursuant to their initial studies, it established a seventh DAG, the Credentialing Direct Action Group (CDAG), to study the issue of a National Transportation Workers' Identification Card (TWIC) for all transportation workers and other persons who require access to secure areas at transportation facilities. Pending legislation has pointed to a need for such a card. Further, the Transportation Security Administration (TSA), newly formed within the Department of Transportation (DOT) itself, formed ''Go-Teams''—short-term, highly focused working groups that are concentrating on various specific technologies and credentialing issues, such as card architecture, biometrics, and ''smart cards.'' More information about credentialing is available on the website of TSA at *http://www.tsa.gov/*.

The goal of the CDAG is to fashion a nationwide solution to the problem of identifying workers that verifies their identity, validates their background information, assists transportation facilities in managing their security risks, and accounts for access of authorized personnel to transportation facilities and activities. The CDAG is seeking to identify a solution that would—

- Be fully inter-modal;
- Be built on existing technology, as well as on governmental and commercial business processes and infrastructure, as much as possible;
- Minimize the need for workers and other people to carry multiple ID cards;
- Ensure due protection of a card holder's privacy;
- Meet Congressional mandates as both expressed in current legislation and supported in pending legislation;
- Meet standards of the International Maritime Organization (IMO); and
- Be scalable and expandable to address future access-enabling technologies.

In terms developed by the workshop, the solution would be Secure, Acceptable, Reliable, and Uniform.

The events of September 11 heightened awareness of waterfront vulnerability and the need for better control. This is a very dynamic area in which new risks are perceived and new technologies are available to address them. The Coast Guard intends to address those risks initially by resuming enforcement of existing rules, such as 33 CFR Parts 6 and 125, until DOT, Congress, and the CDAG provide new guidance and direction for incorporating more effective, commerce-friendly technology.

The Coast Guard is continually participating in the CDAG's efforts and awaits its recommendations, as well as DOT's decision on the TWIC, to avoid proceeding in any direction that may be in conflict with the decision ultimately chosen by the Department. We recognize the necessity of gathering information so that we will be prepared to carry out our commitment to enhance maritime security in a timely manner. We also recognize the imperative of controlling access while we achieve a longer-term, comprehensive means of security. At this time we are not requesting that comments be submitted addressing this notice or its subject. However, before any new rulemaking the public will have the opportunity to comment.

Purpose

This document serves to bring to the attention of the public clarification of the identification credentials deemed acceptable to the Commandant under 33 CFR 125.09(f). Furthermore, as stated in 33 CFR 6.10–5, and in 33 CFR 125.09, 125.15, and 125.53, the Coast Guard may, from time to time, prevent

individuals without the proper identification credentials from gaining access to waterfront facilities, areas within the port and harbor, and on vessels and harbor craft. From September 6, 2002, every person (including passengers) entering a waterfront facility, or embarking on or disembarking from a vessel or a harbor craft, may use credentials that are laminated (or otherwise protected against tampering), contain the person's full name and a current photograph, and bear the name of the issuing authority to meet the requirements of 33 CFR 6.10–5, 33 CFR 125.15, and 125.53.

Because these credentials are for use essentially in the maritime realm, they bear the narrow label of ''maritime credentials.'' However, since the people carrying them will be representative of the inter-modal community (shipping, trucking, and rail employees, as well as longshoremen and mariners), the credentials will not apply solely to personnel in the maritime realm. When the Department of Transportation makes a decision concerning the TWIC, the Coast Guard will reevaluate this action and determine how best to harmonize these requirements with any requirements by the Department of Transportation.

At this time, we must limit identification credentials ''satisfactory to the Commandant'' [33 CFR 6.10–5] to those issued by a Federal, State, or local authority in the United States acceptable to the Captain of the Port (COTP). As Port Security Plans are developed, they will detail acceptable issuing authorities. Acceptable credentials include:

- A military identification card;
- A badge for a Federal employee such as DOT, DOD, FBI, CIA;
- A driver's license or official identification card issued by a Department of Motor Vehicles or a Motor-Vehicle Administration within the U.S.;
- A merchant mariner's document issued by the Coast Guard;
- A valid passport;
- A local-law enforcement credential;
- An identification credential issued by a State or local port authority; and
- An identification credential issued by a company, union, or trade association.

Signed: July 30, 2002.

Paul J. Pluta,

Rear Admiral, U.S. Coast Guard, Assistant Commandant for Marine Safety, Security and Environmental Protection.

[FR Doc. 02–19844 Filed 8–6–02; 8:45 am]

BILLING CODE 4910–15–P

DEPARTMENT OF TRANSPORTATION

Coast Guard

33 CFR Part 165

[CGD09–02–501]

Safety Zone: Captain of the Port Milwaukee Zone

AGENCY: Coast Guard, DOT.

ACTION: Notice of implementation of regulation.

SUMMARY: The Coast Guard is implementing safety zones for annual fireworks displays in the Captain of the Port Milwaukee Zone during August 2002. This action is necessary to provide for the safety of life and property on navigable waters during these events. These zones will restrict vessel traffic from a portion of the Captain of the Port Milwaukee Zone.

DATES: The safety zone for the African World Festival—Milwaukee, WI (§ 165.909(a)(6)), will be enforced on August 2, 2002, from 8:50 p.m. until 9:30 p.m., but in the event of inclement weather on August 2, 2002, the safety zone will be enforced from 8:50 p.m. until 9:30 p.m. on August 3, 2002, instead. The safety zone for the Sturgeon Bay Venetian Night Fireworks (§ 165.909(a)(26)), will be enforced on August 3, 2002 from 9:20 a.m. until 10:10 p.m. The safety zone for the Menominee Waterfront Festival (§ 165.909(a)(24)), will be enforced on August 3, 2002 from 9:20 p.m. until 10:10 p.m. The safety zone for the Algoma Shanty Days Fireworks (§ 165.909(a)(26)), will be enforced on August 11, 2002, from 9:20 p.m. until 10:10 p.m. The safety zone for the Irish Fest Fireworks—Milwaukee, WI (§ 165.909(a)(7)), will be enforced on August 15 through 18, 2002, from 9:25 p.m. until 10 p.m. The safety zone for the Sister Bay Marinafest—Sister Bay Fireworks (§ 165.909(a)(27)), will be enforced on August 31, 2002, from 8 p.m. until 10 p.m.

FOR FURTHER INFORMATION CONTACT: Marine Science Technician Chief Dave McClintock, U.S. Coast Guard Marine Safety Office Milwaukee, (414) 747–7155.

SUPPLEMENTARY INFORMATION: The Coast Guard is implementing the permanent safety zones in 33 CFR 165.909(a)(6)(7)(24)–(27) (67 FR 44560, July 3, 2002), for fireworks displays in the Captain of the Port Milwaukee Zone during August 2002. In chronological order, the following safety zones are in effect for fireworks displays occurring in the month of August 2002:

African World Festival—Milwaukee, WI. This safety zone will be enforced on August 2, 2002, from 8:50 p.m. until 9:30 p.m. In the event of inclement weather on August 2, 2002, the safety zone will be enforced from 8:50 p.m. until 9:30 p.m. on August 3, 2002.

Sturgeon Bay Venetian Night Fireworks. This safety zone will be enforced on August 3, 2002 from 9:20 a.m. until 10:10 p.m.

Menominee Waterfront Festival. This safety zone will be enforced on August 3, 2002 from 9:20 p.m. until 10:10 p.m.

Algoma Shanty Days Fireworks. This safety zone will be enforced on August 11, 2002, from 9:20 p.m. until 10:10 p.m. If the secondary location is used it will be during the same times as the primary location.

Irishfest Fireworks—Milwaukee, WI. This safety zone will be enforced on August 15 through 18, 2002, from 9:25 p.m. until 10 p.m.

Sister Bay Marinafest—Sister Bay. This safety zone will be enforced on August 31, 2002, from 8 p.m. until 10 p.m.

In order to ensure the safety of spectators and transiting vessels, this safety zone will be in effect for the duration of the event. Vessels may not enter the safety zone without permission from Captain of the Port Milwaukee Zone. Requests to transit the safety zone must be made in advance by contacting the person listed in **FOR FURTHER INFORMATION CONTACT** and must be approved by the Captain of the Port Milwaukee before transits will be authorized. Spectator vessels may anchor outside the safety zone but are cautioned not to block a navigable channel.

Dated: July 29, 2002.

V. J. Kammer,

Lieutenant Commander, U.S. Coast Guard, Acting Captain of the Port Milwaukee.

[FR Doc. 02–19849 Filed 8–6–02; 8:45 am]

BILLING CODE 4910–15–P

ENVIRONMENTAL PROTECTION AGENCY

40 CFR Part 180

[OPP–2002–0106; FRL–7189–7]

Methyl Anthranilate; Exemption from the Requirement of a Tolerance

AGENCY: Environmental Protection Agency (EPA).

ACTION: Final rule.

SUMMARY: This regulation establishes an exemption from the requirement of a tolerance for residues of methyl

anthranilate on all food commodities when applied/used in accordance with good agricultural practices. Bird Shield Repellent Corporation submitted a petition to EPA under the Federal Food, Drug, and Cosmetic Act (FFDCA), as amended by the Food Quality Protection Act of 1996 (FQPA), requesting an exemption from the requirement of a tolerance. This regulation eliminates the need to establish a maximum permissible level for residues of methyl anthranilate.

DATES: This regulation is effective August 7, 2002. Objections and requests for hearings, identified by docket ID number OPP–2002–0106, must be received on or before October 7, 2002.

ADDRESSES: Written objections and hearing requests may be submitted by mail, electronically, or in person. Please follow the detailed instructions for each method as provided in Unit X. of the **SUPPLEMENTARY INFORMATION**. To ensure proper receipt by EPA, your objections and hearing requests must identify docket ID number OPP–2002–0106 in the subject line on the first page of your response.

FOR FURTHER INFORMATION CONTACT: By mail: Jim Downing, c/o Product Manager (PM) 90, Biopesticides and Pollution Prevention Division (7511C), Environmental Protection Agency, 1200 Pennsylvania Ave., NW., Washington, DC 20460; telephone number: (703) 308–9071; e-mail address: Downing.Jim@epa.gov.

SUPPLEMENTARY INFORMATION:

I. General Information

A. Does this Action Apply to Me?

You may be affected by this action if you are an agricultural producer, food manufacturer, or pesticide manufacturer. Potentially affected categories and entities may include, but are not limited to:

Categories	NAICS Codes	Examples of Potentially Affected Entities
Industry	111 112 311 32532	Crop production Animal production Food manufacturing Pesticide manufacturing

This listing is not intended to be exhaustive, but rather provides a guide for readers regarding entities likely to be affected by this action. Other types of entities not listed in the table could also be affected. The North American Industrial Classification System (NAICS) codes have been provided to assist you and others in determining whether or not this action might apply to certain entities. If you have questions regarding the applicability of this action to a particular entity, consult the person listed under **FOR FURTHER INFORMATION CONTACT**.

B. How Can I Get Additional Information, Including Copies of this Document and Other Related Documents?

1. *Electronically.* You may obtain electronic copies of this document, and certain other related documents that might be available electronically, from the EPA Internet Home Page at http://www.epa.gov/. To access this document, on the Home Page select ''Laws and Regulations,'' ''Regulations and Proposed Rules,'' and then look up the entry for this document under the ''**Federal Register**—Environmental Documents.'' You can also go directly to the **Federal Register** listings at http://www.epa.gov/fedrgstr/. To access the OPPTS Harmonized Guidelines referenced in this document, go directly to the guidelines at http://www.epa.gov/opptsfrs/home/guidelin.htm. A frequently updated electronic version of 40 CFR part 180 is available at http://www.access.gpo.gov/nara/cfr/cfrhtml_180/Title_40/40cfr180_00.html, a beta site currently under development.

2. *In person.* The Agency has established an official record for this action under docket ID number OPP–2002–0106. The official record consists of the documents specifically referenced in this action, and other information related to this action, including any information claimed as Confidential Business Information (CBI). This official record includes the documents that are physically located in the docket, as well as the documents that are referenced in those documents. The public version of the official record does not include any information claimed as CBI. The public version of the official record, which includes printed, paper versions of any electronic comments submitted during an applicable comment period is available for inspection in the Public Information and Records Integrity Branch (PIRIB), Rm. 119, Crystal Mall #2, 1921 Jefferson Davis Hwy., Arlington, VA, from 8:30 a.m. to 4 p.m., Monday through Friday, excluding legal holidays. The PIRIB telephone number is (703) 305–5805.

II. Background and Statutory Findings

In the **Federal Register** of February 27, 2002 (67 FR 8968) (FRL–6818–9), EPA issued a notice pursuant to section 408 of FFDCA, 21 U.S.C. 346a(d), as amended by FQPA (Public Law 104–170), announcing the filing of a pesticide tolerance petition (PP 1F6271) by Bird Shield Repellent Corporation, P.O. Box 785, Pullman, WA 99163. This notice included a summary of the petition prepared by the petitioner Bird Shield Repellent Corporation. There were no comments received in response to the notice of filing.

The petition requested that 40 CFR 180.1143 be amended by establishing an exemption from the requirement of a tolerance for residues of methyl anthranilate in or on all food commodities.

III. Risk Assessment

New section 408(c)(2)(A)(i) of the FFDCA allows EPA to establish an exemption from the requirement for a tolerance (the legal limit for a pesticide chemical residue in or on a food) only if EPA determines that the tolerance is ''safe.'' Section 408(c)(2)(A)(ii) defines ''safe'' to mean that ''there is a reasonable certainty that no harm will result from aggregate exposure to the pesticide chemical residue, including all anticipated dietary exposures and all other exposures for which there is reliable information.'' This includes exposure through drinking water and in residential settings, but does not include occupational exposure. Section 408(b)(2)(C) requires EPA to give special consideration to exposure of infants and children to the pesticide chemical residue in establishing a tolerance and to ''ensure that there is a reasonable certainty that no harm will result to infants and children from aggregate exposure to the pesticide chemical residue....'' Additionally, section 408(b)(2)(D) requires that the Agency consider ''available information'' concerning the cumulative effects of a particular pesticide's residues and ''other substances that have a common mechanism of toxicity.''

EPA performs a number of analyses to determine the risks from aggregate exposure to pesticide residues. First, EPA determines the toxicity of pesticides. Second, EPA examines exposure to the pesticide through food, drinking water, and through other exposures that occur as a result of pesticide use in residential settings.

IV. Toxicological Profile

Consistent with section 408(b)(2)(D) of FFDCA, EPA has reviewed the available scientific data and other relevant information in support of this action and considered its validity, completeness, and reliability and the relationship of this information to human risk. EPA has also considered available information concerning the variability of the sensitivities of major

identifiable subgroups of consumers, including infants and children.

Methyl anthranilate is naturally occurring in certain foods, such as concord grapes. It is also synthetically produced and used as a flavoring agent (21 CFR 182.60) in beverages, ice cream, candy, baked goods, gelatins, puddings, and chewing gum. It is also exempt from the requirement of a tolerance in or on blueberries, cherries, grapes, corn and sunflowers (40 CFR 180.1143). A discussion of the rationale supporting that exemption may be found in the first proposed rule ((60 FR 9816), February 22, 1995, (FRL–4936–2)), as well as in the final rules ((60 FR 20432), April 26, 1995, (FRL–4941–8)) and ((66 FR 30822), June 8, 2001, (FRL–6780–9)). In addition, methyl anthranilate is classified as generally recognized as safe (GRAS) by the Food and Drug Administration (FDA) (21 CFR 182.60).

Methyl anthranilate, applied at labeled rates, rapidly decomposes into non-toxic components leaving no significant residues relative to levels found in food commodities to which it is applied, because of its volatility (MRID 42151903). Some residues studies found no residues at time of harvest, while other studies showed that the residues of methyl anthranilate were less than those found naturally in grapes. Moreover, it has been determined that even if ingested, the chemical rapidly metabolizes in the intestines and byproducts are excreted (MRID 44786300, Part B). In addition to this information, the Agency has determined that all toxicology data requirements have been satisfied and it has conducted a review of these studies. Summaries of these studies are presented below. For a more detailed discussion of these studies, see the Data Review Records located in the information docket referred to above.

Methyl anthranilate exhibits little or no mammalian toxicity. It metabolizes in the intestine when consumed. The lethal dose $(LD)_{50}$ values for methyl anthranilate were estimated to be greater than 5,000 milligram/kilogram (mg/kg) in an acute oral toxicity study in rats (Toxicity Category IV) and greater than 2,000 mg/kg in dermal toxicity studies using rats (Toxicity Category III). Whole body inhalation studies, for the same species, determined toxicity to be greater than 2.24 mg/L. Methyl anthranilate was found to cause moderate irritation in a rabbit skin irritation assay (Toxicity Category III) and corneal effects that cleared in 8 to 21 days in a rabbit eye irritation assay (Toxicity Category II).

Guideline	Study	MRID No.	Toxicity Category
870.1100	Acute Oral Toxicity - rat	44740301	IV
870.1200	Acute Dermal Toxicity	44740302	III
870.1300	Acute Inhalation Toxicity - rat	44740303	III
870.2400	Acute (Primary) Eye Irritation - rabbits	44070302	II
870.2500	Acute (Primary Dermal) Skin Irritation	44070301	III
870.2600	Hypersensitivity (skin sensitization)	NA	Waived

Appropriate labeling (protective eyewear) was used to mitigate these minimal acute toxicological risks. Due to the low toxicity, metabolism, rapid degradation and long history of dietary exposure to this naturally occurring biochemical, chronic and subchronic data were waived. No other toxic endpoints were identified and therefore no reference dose and no observable adverse effect levels were established.

V. Aggregate Exposures

In examining aggregate exposure, FFDCA section 408 directs EPA to consider available information concerning exposures from the pesticide residue in food and all other non-occupational exposures, including drinking water from ground water or surface water and exposure through pesticide use in gardens, lawns, or buildings (residential and other indoor uses).

A. Dietary Exposure

1. *Food.* Methyl anthranilate bird repellent is labeled to be applied at a rate of 0.2862 up to 6.18 pounds per acre depending on the crop/use. Pre-harvest intervals are established for all food crops on the label to minimize residues. Because of these relatively low use rates and pre-harvest intervals as currently registered and labeled, and the biochemical's rapid degradation, few methyl anthranilate residues have been detected on treated crops, and some studies found no residues immediately after application (MRID 45065102, 45065103, 45065104, 45065105). Further, because of its volatility and degradation (MRID 43119401) when exposed to ultraviolet light and elevated temperatures, no residues or low residues (below natural levels occurring in commonly consumed foods, such as grapes) are expected at harvest of treated crops (MRID 42740205). Dietary exposure to methyl anthranilate, by consumption of treated food or feed, is therefore expected to be negligible (MRID 44786301). Further, since methyl anthranilate has shown no mammalian toxicity and is rapidly metabolized in human intestines and liver, no dietary risk from any residues that may result from these additional uses of this biochemical pesticide are anticipated. To date, there have been no reports of any hypersensitivity incidents or reports of any known adverse reactions in humans resulting from exposure to methyl anthranilate.

2. *Drinking water exposure.* Methyl anthranilate is very unlikely to be found in drinking water, given the low application rates and rapid environmental and microbial degradation (MRID 431194–01).

B. Other Non-dietary, Non-Occupational Exposure

1. Even though methyl anthranilate products are registered for use on lawns and ornamentals and are used on household garden crops (cherries, blueberries and table grapes), the non-occupational exposure is not expected to be great because of the limited number of times it will be used (once per season), the size of the crops to which the repellent will be applied, (backyard trees, bushes and vines), and the small amounts of the repellent required to protect the crops (for example, 0.0945 lbs./tree) from bird damage during a brief period of time (typically, 1 to 2 weeks).

2. Because the labeled application rate is low for residential uses and the fact that methyl anthranilate rapidly degrades under sunlight and elevated temperatures after application, only limited human exposure is anticipated. Household applicator exposure is addressed through appropriate labeling: ''Wear protective eyewear (goggles, face shield or safety glasses)'' and ''Do not get in eyes or on clothing.''

3. Further, considering the fact that several uses of this biochemical have been registered for several years on several agricultural crops as well as turf, structures and ornamentals, the Agency has received no reports of adverse

effects from the uses of methyl anthranilate.

VI. Cumulative Effects

Methyl anthranilate does not exhibit a toxic mode of action to mammals, nor even to the target pest (birds), to which limit doses were tested. Thus, because there is no indication of mammalian toxicity to this biochemical, no cumulative effects with other compounds is expected.

VII. Determination of Safety for U.S. Population, Infants and Children

1. *U.S. population.* There is a reasonable certainty that no harm will result from aggregate exposure to residues of methyl anthranilate to the U.S. population under reasonably foreseeable circumstances. This includes all anticipated dietary exposures and all other exposures for which there is reliable information. The Agency has arrived at this conclusion based on the very low levels of mammalian toxicity (no toxicity at the maximum doses tested) associated with methyl anthranilate and a history of safe use and consumption of methyl anthranilate as well as a consideration of the product as currently registered and labeled.

2. *Infants and children.* FFDCA section 408 provides that EPA shall apply an additional tenfold margin of exposure (safety) for infants and children in the case of threshold effects to account for prenatal and postnatal toxicity and the completeness of the data base unless EPA determines that a different margin of exposure (safety) will be safe for infants and children. Margins of exposure (safety) are often referred to as uncertainty (safety) factors. In this instance, based on all the available information, the Agency concludes that methyl anthranilate is practically non-toxic to mammals, including infants and children. Thus, there are no threshold effects of concern and, as a result the provision requiring an additional margin of safety does not apply. Further, the provisions of consumption patterns, special susceptibility, and cumulative effects do not apply. As a result, EPA has not used a margin of exposure (safety) approach to assess the safety of methyl anthranilate.

VIII. Other Considerations

A. Endocrine Disruptors

EPA is required under the FFDCA, as amended by FQPA, to develop a screening program to determine whether certain substances (including all pesticide active and other ingredients) ''may have an effect in humans that is similar to an effect produced by a naturally- occurring estrogen, to other such endocrine effects as the Administrator may designate.'' Following the recommendations of its Endocrine Disruptor Screening and Testing Advisory Committee (EDSTAC), EPA determined that there was scientific basis for including, as part of the program, the androgen and thyroid hormone systems, in addition to the estrogen hormone system. EPA also adopted EDSTAC's recommendation that the program include evaluations of potential effects in wildlife. For pesticide chemicals, EPA will use FIFRA and, to the extent that effects in wildlife may help determine whether a substance may have an effect in humans, FFDCA authority to require the wildlife evaluations. As the science develops and resources allow, screening of additional hormone systems may be added to the Endocrine Disruptor Screening Programs (EDSP). When the appropriate screening and or testing protocols being considered under the Agency's EDSP have been developed, methyl anthranilate may be subjected to additional screening and/or testing to better characterize effects related to endocrine disruption.

Based on available data, no endocrine system-related effects have been identified with the consumption of methyl anthranilate. It is a naturally occurring substance found in grapes. To date, there is no evidence to suggest that methyl anthranilate affects the immune system, functions in a manner similar to any known hormone, or that it acts as an endocrine disruptor.

B. Analytical Method

This action is establishing an exemption from the requirement of a tolerance for the reasons described above. As previously noted, methyl anthranilate exhibits rather low toxicity. For this reason and because no significant residues have been detected on treated crops at time of harvest (in other words, residues beyond that of methyl anthranilate found naturally in grapes are unlikely), no analytical method for enforcement purposes is necessary.

C. Codex Maximum Residue Level

The Agency is not aware of any international tolerances, exemptions from tolerance or Maximum Residue Levels (MRLs) issued for methyl anthranilate. Furthermore, the Agency is not aware of any issues regarding Codex MRLs.

IX. Conclusions

Based on the toxicology data submitted and other relevant information in the Agency's files, there is reasonable certainty no harm will result from aggregate exposure of residues of methyl anthranilate to the U.S. population, including infants and children, under reasonably foreseeable circumstances when the biopesticide product is used as labeled and in accordance with good agricultural practices. This includes all anticipated dietary exposures and all other exposures for which there is reliable information. The Agency has arrived at this conclusion based on data submitted demonstrating no toxicity at the maximum doses tested and a long history of safe use and consumption of naturally occurring methyl anthranilate as well as a consideration of the product as currently registered and labeled. As a result, EPA establishes an exemption from tolerance requirements pursuant to FFDCA 408(c) and (d) for residues of methyl anthranilate in or on all food commodities.

X. Objections and Hearing Requests

Under section 408(g) of the FFDCA, as amended by the FQPA, any person may file an objection to any aspect of this regulation and may also request a hearing on those objections. The EPA procedural regulations which govern the submission of objections and requests for hearings appear in 40 CFR part 178. Although the procedures in those regulations require some modification to reflect the amendments made to the FFDCA by the FQPA of 1996, EPA will continue to use those procedures, with appropriate adjustments, until the necessary modifications can be made. The new section 408(g) provides essentially the same process for persons to ''object'' to a regulation for an exemption from the requirement of a tolerance issued by EPA under new section 408(d), as was provided in the old FFDCA sections 408 and 409. However, the period for filing objections is now 60 days, rather than 30 days.

A. What Do I Need to Do to File an Objection or Request a Hearing?

You must file your objection or request a hearing on this regulation in accordance with the instructions provided in this unit and in 40 CFR part 178. To ensure proper receipt by EPA, you must identify docket ID number OPP–2002–0106 in the subject line on the first page of your submission. All requests must be in writing, and must be mailed or delivered to the Hearing Clerk on or before October 7, 2002.

1. *Filing the request.* Your objection must specify the specific provisions in the regulation that you object to, and the grounds for the objections (40 CFR 178.25). If a hearing is requested, the objections must include a statement of the factual issues(s) on which a hearing is requested, the requestor's contentions on such issues, and a summary of any evidence relied upon by the objector (40 CFR 178.27). Information submitted in connection with an objection or hearing request may be claimed confidential by marking any part or all of that information as CBI. Information so marked will not be disclosed except in accordance with procedures set forth in 40 CFR part 2. A copy of the information that does not contain CBI must be submitted for inclusion in the public record. Information not marked confidential may be disclosed publicly by EPA without prior notice.

Mail your written request to: Office of the Hearing Clerk (1900), Environmental Protection Agency, 1200 Pennsylvania Ave., NW., Washington, DC 20460. You may also deliver your request to the Office of the Hearing Clerk in Rm. C400, Waterside Mall, 401 M St., SW., Washington, DC 20460. The Office of the Hearing Clerk is open from 8 a.m. to 4 p.m., Monday through Friday, excluding legal holidays. The telephone number for the Office of the Hearing Clerk is (202) 260–4865.

2. *Tolerance fee payment.* If you file an objection or request a hearing, you must also pay the fee prescribed by 40 CFR 180.33(i) or request a waiver of that fee pursuant to 40 CFR 180.33(m). You must mail the fee to: EPA Headquarters Accounting Operations Branch, Office of Pesticide Programs, P.O. Box 360277M, Pittsburgh, PA 15251. Please identify the fee submission by labeling it ''Tolerance Petition Fees.''

EPA is authorized to waive any fee requirement ''when in the judgement of the Administrator such a waiver or refund is equitable and not contrary to the purpose of this subsection.'' For additional information regarding the waiver of these fees, you may contact James Tompkins by phone at (703) 305–5697, by e-mail at tompkins.jim@epa.gov, or by mailing a request for information to Mr. Tompkins at Registration Division (7505C), Office of Pesticide Programs, Environmental Protection Agency, 1200 Pennsylvania Ave., NW., Washington, DC 20460.

If you would like to request a waiver of the tolerance objection fees, you must mail your request for such a waiver to: James Hollins, Information Resources and Services Division (7502C), Office of Pesticide Programs, Environmental Protection Agency, 1200 Pennsylvania Ave., NW., Washington, DC 20460.

3. *Copies for the Docket.* In addition to filing an objection or hearing request with the Hearing Clerk as described in Unit IX.A., you should also send a copy of your request to the PIRIB for its inclusion in the official record that is described in Unit I.B.2. Mail your copies, identified by docket ID number OPP–2002–0106, to: Public Information and Records Integrity Branch, Information Resources and Services Division (7502C), Office of Pesticide Programs, Environmental Protection Agency, 1200 Pennsylvania Ave., NW., Washington, DC 20460. In person or by courier, bring a copy to the location of the PIRIB described in Unit I.B.2. You may also send an electronic copy of your request via e-mail to: opp-docket@epa.gov. Please use an ASCII file format and avoid the use of special characters and any form of encryption. Copies of electronic objections and hearing requests will also be accepted on disks in WordPerfect 6.1/8.0 or ASCII file format. Do not include any CBI in your electronic copy. You may also submit an electronic copy of your request at many Federal Depository Libraries.

B. When Will the Agency Grant a Request for a Hearing?

A request for a hearing will be granted if the Administrator determines that the material submitted shows the following: There is a genuine and substantial issue of fact; there is a reasonable possibility that available evidence identified by the requestor would, if established resolve one or more of such issues in favor of the requestor, taking into account uncontested claims or facts to the contrary; and resolution of the factual issues(s) in the manner sought by the requestor would be adequate to justify the action requested (40 CFR 178.32).

XI. Regulatory Assessment Requirements

This final rule establishes an exemption from the requirement of a tolerance under FFDCA section 408(d) in response to a petition submitted to the Agency. The Office of Management and Budget (OMB) has exempted these types of actions from review under Executive Order 12866, entitled *Regulatory Planning and Review* (58 FR 51735, October 4, 1993). Because this rule has been exempted from review under Executive Order 12866 due to its lack of significance, this rule is not subject to Executive Order 13211, *Actions Concerning Regulations That Significantly Affect Energy Supply, Distribution, or Use* (66 FR 28355, May 22, 2001). This final rule does not contain any information collections subject to OMB approval under the Paperwork Reduction Act (PRA), 44 U.S.C. 3501 *et seq.*, or impose any enforceable duty or contain any unfunded mandate as described under Title II of the Unfunded Mandates Reform Act of 1995 (UMRA) (Public Law 104–4). Nor does it require any special considerations under Executive Order 12898, entitled *Federal Actions to Address Environmental Justice in Minority Populations and Low-Income Populations* (59 FR 7629, February 16, 1994); or OMB review or any Agency action under Executive Order 13045, entitled *Protection of Children from Environmental Health Risks and Safety Risks* (62 FR 19885, April 23, 1997). This action does not involve any technical standards that would require Agency consideration of voluntary consensus standards pursuant to section 12(d) of the National Technology Transfer and Advancement Act of 1995 (NTTAA), Public Law 104–113, section 12(d) (15 U.S.C. 272 note). Since tolerances and exemptions that are established on the basis of a petition under FFDCA section 408(d), such as the exemption in this final rule, do not require the issuance of a proposed rule, the requirements of the Regulatory Flexibility Act (RFA) (5 U.S.C. 601 *et seq.*) do not apply. In addition, the Agency has determined that this action will not have a substantial direct effect on States, on the relationship between the national government and the States, or on the distribution of power and responsibilities among the various levels of government, as specified in Executive Order 13132, entitled *Federalism* (64 FR 43255, August 10, 1999). Executive Order 13132 requires EPA to develop an accountable process to ensure ''meaningful and timely input by State and local officials in the development of regulatory policies that have federalism implications.'' ''Policies that have federalism implications'' is defined in the Executive Order to include regulations that have ''substantial direct effects on the States, on the relationship between the national government and the States, or on the distribution of power and responsibilities among the various levels of government.'' This final rule directly regulates growers, food processors, food handlers and food retailers, not States. This action does not alter the relationships or distribution of power and responsibilities established by Congress in the preemption provisions of FFDCA section 408(n)(4). For these same reasons, the Agency has

determined that this rule does not have any ''tribal implications'' as described in Executive Order 13175, entitled *Consultation and Coordination with Indian Tribal Governments* (65 FR 67249, November 6, 2000). Executive Order 13175, requires EPA to develop an accountable process to ensure ''meaningful and timely input by tribal officials in the development of regulatory policies that have tribal implications.'' ''Policies that have tribal implications'' is defined in the Executive Order to include regulations that have ''substantial direct effects on one or more Indian tribes, on the relationship between the Federal Government and the Indian tribes, or on the distribution of power and responsibilities between the Federal Government and Indian tribes.'' This rule will not have substantial direct effects on tribal governments, on the relationship between the Federal Government and Indian tribes, or on the distribution of power and responsibilities between the Federal government and Indian tribes, as specified in Executive Order 13175. Thus, Executive Order 13175 does not apply to this rule.

XII. Submission to Congress and the Comptroller General

The Congressional Review Act, 5 U.S.C. 801 *et seq.*, as added by the Small Business Regulatory Enforcement Fairness Act of 1996, generally provides that before a rule may take effect, the agency promulgating the rule must submit a rule report, which includes a copy of the rule, to each House of the Congress and to the Comptroller General of the United States. EPA will submit a report containing this rule and other required information to the U.S. Senate, the U.S. House of Representatives, and the Comptroller General of the United States prior to publication of this final rule in the **Federal Register**. This final rule is not a ''major rule'' as defined by 5 U.S.C. 804(2).

List of Subjects in 40 CFR Part 180

Environmental protection, Administrative practice and procedure, Agricultural commodities, Pesticides and pests, Reporting and recordkeeping requirements.

Dated: July 26, 2002

Janet L. Andersen,

Director, Biopesticides and Pollution Prevention Division, Office of Pesticide Programs.

Therefore, 40 CFR chapter I is amended as follows:

PART 180—[AMENDED]

1. The authority citation for part 180 continues to read as follows:

Authority: 21 U.S.C. 321(q), 346(a) and 371.

2. Section 180.1143 is revised to read as follows:

§ 180.1143 Methyl anthranilate; exemption from the requirement of a tolerance.

Residues of methyl anthranilate, a biochemical pesticide, are exempt from the requirement of a tolerance in or on all food commodities, when used in accordance with good agricultural practices.

[FR Doc. 02–19808 Filed 8–6–02; 8:45 am]

BILLING CODE 6560–50–S

ENVIRONMENTAL PROTECTION AGENCY

40 CFR Part 180

[OPP–2002–0160; FRL–7189–2]

Metsulfuron Methyl; Pesticide Tolerance

AGENCY: Environmental Protection Agency (EPA).

ACTION: Final rule.

SUMMARY: This regulation establishes a tolerance for combined residues of metsulfuron methyl and its metabolite methyl 2-[[[[(4-methoxy-6-methyl-1,3,5-triazin-2-yl)amino]carbonyl]amino]sulfonyl]-4-hydroxbenzoate in or on sorghum, grain, grain at 0.1 part per million (ppm); sorghum, grain, forage and sorghum, grain, stover at 0.2 ppm. E.I. DuPont de Nemours & Company requested this tolerance under the Federal Food, Drug, and Cosmetic Act (FFDCA), as amended by the Food Quality Protection Act of 1996 (FQPA).

DATES: This regulation is effective August 7, 2002. Objections and requests for hearings, identified by docket ID number OPP–2002–0160, must be received on or before October 7, 2002.

ADDRESSES: Written objections and hearing requests may be submitted by mail, in person, or by courier. Please follow the detailed instructions for each method as provided in Unit VI. of the **SUPPLEMENTARY INFORMATION**. To ensure proper receipt by EPA, your objections and hearing requests must identify docket ID number OPP–2002–0160 in the subject line on the first page of your response.

FOR FURTHER INFORMATION CONTACT: By mail: James A. Tompkins, Registration Division (7505C), Office of Pesticide Programs, Environmental Protection Agency, 1200 Pennsylvania Ave., NW.,Washington, DC 20460; telephone number: (703) 305–5697; e-mail address: Tompkins.jim@epa.gov.

SUPPLEMENTARY INFORMATION:

I. General Information

A. Does this Action Apply to Me?

You may be affected by this action if you are an agricultural producer, food manufacturer, or pesticide manufacturer. Potentially affected categories and entities may include, but are not limited to:

Categories	NAICS Codes	Examples of Potentially Affected Entities
Industry	111 112 311 32532	Crop production Animal production Food manufacturing Pesticide manufacturing

This listing is not intended to be exhaustive, but rather provides a guide for readers regarding entities likely to be affected by this action. Other types of entities not listed in the table could also be affected. The North American Industrial Classification System (NAICS) codes have been provided to assist you and others in determining whether or not this action might apply to certain entities. If you have questions regarding the applicability of this action to a particular entity, consult the person listed under **FOR FURTHER INFORMATION CONTACT**.

B. How Can I Get Additional Information, Including Copies of this Document and Other Related Documents?

1. *Electronically*. You may obtain electronic copies of this document, and certain other related documents that might be available electronically, from the EPA Internet Home Page at http://www.epa.gov/. To access this document, on the Home Page select ''Laws and Regulations'', ''Regulations and Proposed Rules,'' and then look up the entry for this document under the ''**Federal Register**—Environmental Documents.'' You can also go directly to the **Federal Register** listings at http://www.epa.gov/fedrgstr/. A frequently updated electronic version of 40 CFR part 180 is available at http://www.access.gpo.gov/nara/cfr/cfrhtml_00/Title_40/40cfr180_00.html, a beta site currently under development. To access the OPPTS Harmonized Guidelines referenced in this document, go directly to the guidelines at http://

www.epa.gov/opptsfrs/home/guidelin.htm.

2. *In person*. The Agency has established an official record for this action under docket ID number OPP–2002–0160. The official record consists of the documents specifically referenced in this action, and other information related to this action, including any information claimed as Confidential Business Information (CBI). This official record includes the documents that are physically located in the docket, as well as the documents that are referenced in those documents. The public version of the official record does not include any information claimed as CBI. The public version of the official record, which includes printed, paper versions of any electronic comments submitted during an applicable comment period is available for inspection in the Public Information and Records Integrity Branch (PIRIB), Rm. 119, Crystal Mall #2, 1921 Jefferson Davis Hwy., Arlington, VA, from 8:30 a.m. to 4 p.m., Monday through Friday, excluding legal holidays. The PIRIB telephone number is (703) 305–5805.

II. Background and Statutory Findings

In the **Federal Register** of March 19, 1998 (63 FR 13401) (FRL–5776–7), EPA issued a notice pursuant to section 408 of FFDCA, 21 U.S.C. 346a, as amended by FQPA (Public Law 104–170), announcing the filing of a pesticide petition (PP 3F4215) by E.I. du Pont de Nemours & Company, Agricultural Products, P. O. Box 80038, Wilmington, DE 19880–0038. This notice included a summary of the petition prepared by E.I. Du Pont de Nemours & Company, the registrant. There were no comments received in response to the notice of filing.

The petition requested that 40 CFR 180.428 be amended by establishing tolerances for combined residues of the herbicide metsulfuron methyl, methyl-2-[[[[(4-methoxy-6- methyl-1,3,5-triazin-2-yl)amino]carbonyl] amino]sulfonyl] benzoate, in or on sorghum grain at 0.1 ppm, sorghum forage at 0.2 ppm, and sorghum fodder at 0.2 ppm. Since the publication of the notice of filing, the name and address of the registrant has changed to E.I. DuPont de Nemours and Company, Crop Protection, Stine-Haskell Research Center, P.O. Box 30, Newark, DE 19714–0030. During the course of the review, the Agency determined the commodity listing for grain sorghum should be defined as sorghum, grain, forage; sorghum, grain, grain; and sorghum, grain, stover. The Agency also determined that the metabolite, methyl-2-[[[[(4-methoxy-6-methyl-1,3,5-triazin- 2-yl)amino] carbonyl]amino] sulfonyl]-4-hydroxybenzoate should be included in the tolerance expression for the sorghum, grain commodities. The Agency is also removing the time-limited tolerances established under paragraph b for sorghum, fodder at 0.5 ppm, sorghum, forage at 0.3 ppm, and sorghum, grain at 0.4 ppm, since these will be replaced by these tolerances.

Section 408(b)(2)(A)(i) of the FFDCA allows EPA to establish a tolerance (the legal limit for a pesticide chemical residue in or on a food) only if EPA determines that the tolerance is ''safe.'' Section 408(b)(2)(A)(ii) defines ''safe'' to mean that'' there is a reasonable certainty that no harm will result from aggregate exposure to the pesticide chemical residue, including all anticipated dietary exposures and all other exposures for which there is reliable information.'' This includes exposure through drinking water and in residential settings, but does not include occupational exposure. Section 408(b)(2)(C) requires EPA to give special consideration to exposure of infants and children to the pesticide chemical residue in establishing a tolerance and to ''ensure that there is a reasonable certainty that no harm will result to infants and children from aggregate exposure to the pesticide chemical residue....''

EPA performs a number of analyses to determine the risks from aggregate exposure to pesticide residues. For further discussion of the regulatory requirements of section 408 and a complete description of the risk assessment process, see the final rule on Bifenthrin Pesticide Tolerances (62 FR 62961, November 26, 1997) (FRL–5754–7).

III. Aggregate Risk Assessment and Determination of Safety

Consistent with section 408(b)(2)(D), EPA has reviewed the available scientific data and other relevant information in support of this action. EPA has sufficient data to assess the hazards of and to make a determination on aggregate exposure, consistent with section 408(b)(2), for tolerances for combined residues of metsulfuron methyl (methyl 2-[[[[(4-methoxy-6-methyl-1,3,5-triazin-2-yl)amino] carbonyl]amino]sulfonyl]benzoate) and its metabolite methyl 2-[[[[(4-methoxy-6-methyl-1,3,5-triazin-2-yl)amino]carbonyl]amino]sulfonyl]-4-hydroxybenzoate on sorghum, grain, forage at 0.2 ppm; sorghum, grain, grain at 0.1 ppm; and sorghum, grain, stover at 0.2 ppm. EPA's assessment of exposures and risks associated with establishing the tolerance follows.

A. Toxicological Profile

EPA has evaluated the available toxicity data and considered its validity, completeness, and reliability as well as the relationship of the results of the studies to human risk. EPA has also considered available information concerning the variability of the sensitivities of major identifiable subgroups of consumers, including infants and children. The nature of the toxic effects caused by metsulfuron methyl are discussed in the following Table 1 as well as the no observed adverse effect level (NOAEL) and the lowest observed adverse effect level (LOAEL) from the toxicity studies reviewed.

TABLE 1.—SUBCHRONIC, CHRONIC, AND OTHER TOXICITY

Guideline No.	Study Type	Results
870.3100	90–Day oral toxicity rodents	NOAEL = 68/64 (M/F) milligrams/kilograms/day (mg/kg/day) LOAEL = 521/659 (M/F) mg/kg/day based on transient decreases in body weight gain.
870.3200	21–Day dermal toxicity	dermal NOAEL = 125 mg/kg/day dermal LOAEL = 500 mg/kg/day based on skin lesions characterized by diffuse/multifocal dermatitis. systemic NOAEL: 125 mg/kg/day systemic LOAEL: 500 mg/kg/day based on increased incidence of diarrhea.

TABLE 1.—SUBCHRONIC, CHRONIC, AND OTHER TOXICITY—Continued

Guideline No.	Study Type	Results
870.3700a	Prenatal developmental in rodents	Maternal NOAEL = 250 mg/kg/day LOAEL = 1,000 mg/kg/day based on salivation and decreased body weight gain-compensatory increase after dosing stopped. Developmental NOAEL ≤ 1,000 mg/kg/day highest dose tested (HDT) LOAEL > 1000 mg/kg/day HDT.
870.3700b	Prenatal developmental in nonrodents	Maternal NOAEL = 25 mg/kg/day LOAEL = 1,000 mg/kg/day based on increased mortality, decreased body weight gains, and clinical signs of anorexia, red/orange urine and /or exudate. Developmental NOAEL ≥ 700 mg/kg/day HDT LOAEL > 700 mg/kg/day HDT.
870.3800	Reproduction and fertility effects	Parental/Systemic NOAEL = 34/43(M/F) mg/kg/day LOAEL = 342/475 (M/F) mg/kg/day based on decreased premating body weight gains by F0 males and females. Reproductive NOAEL ≥ 342/475 (M/F) mg/kg/day HDT LOAEL > 342/475 (M/F) mg/kg/day HDT. Offspring NOAEL ≥ 342/475 (M/F) mg/kg/day HDT LOAEL = 342/475 (M/F) mg/kg/day HDT.
870.4100a	Chronic toxicity rodents	NOAEL = 25 (M/F) mg/kg/day LOAEL = 250 (M/F) mg/kg/day based on decreased body weight and body weight gain.
870.4100b	Chronic toxicity dogs	NOAEL ≥ 125 (M/F) mg/kg/day HDT LOAEL = not determined
870.4200	Carcinogenicity rats	NOAEL = 25 (M/F) mg/kg/day LOAEL = 250 (M/F) mg/kg/day based on decreased body weight and body weight gain. (no) evidence of carcinogenicity
870.4300	Carcinogenicity mice	NOAEL ≥ 666/836 (M/F) mg/kg/day HDT LOAEL = not determined (no) evidence of carcinogenicity
870.5100	Gene Mutation *Salmo nella typhimurium*, Ames Test	Not mutagenic under the conditions of this study
870.5375	Cytogenetics *In vitro* mammalian chromosome aberrations-CHO cells (2 studies)	Metsulfuron methyl is not a clastogen under the conditions of this study.
870.5385	*In vivo* mammalian chromosome aberrations-rat bone marrow	Metsulfuron methyl did not induce a significant increase in chromosome aberrations in bone marrow cells when compared to the vehicle control group.
870.5395	*In vivo* mammalian cytogenics-micronucleusassay in mice	Metsulfuron methyl is negative at the limit dose for clastogenic activity in the micronucleus assay in bone marrow cells.
870.5550	Other Effects UDS assay in primary rat hepatocytes/ mammalian cell culture	Metsulfuron methyl tested negatively for UDS in mammalian hepatocytes *in vivo*

TABLE 1.—SUBCHRONIC, CHRONIC, AND OTHER TOXICITY—Continued

Guideline No.	Study Type	Results
870.7485	Metabolism and pharmacokinetics	Overall recovery of metsulfuron methyl among the treatment groups was acceptable (~91.6–103.8 %). The primary route of excretion was via the urine which accounted for approx. 71–95% (78–96% if cage wash radioactivity is considered) among the various treatment groups. Fecal elimination was 4.8–13.3%. Excretion was almost complete within 48 hours. Based on time course urinary and fecal excretion data, elimination half-lives (males and females) were estimated to be 13–16 hours for Group I (single low dose), 9–12 hours for Group II (21–day dietary exposure), and 23–29 hours for Group III (single high dose) which affirmed notable alteration of absorption and/or excretion processes in the high-dose group. Tissue burdens were minimal (generally < 0.1% to 1%) regardless of exposure protocol; the gastrointestinal tract, carcass, and skin had the highest concentrations of radioactivity. For the single or repeated low dose groups, the tissue content was generally ≤0.03 ppm. In the high-dose group, females had somewhat higher tissue burdens (ranging from 0.8 ppm in brain to 7.1 ppm in liver and 8.0 ppm in kidneys) than did males (0.1 ppm in blood to 1.6 ppm in liver and 2.6 ppm in kidneys). No evidence for sequestration of the test article or its biotransformation products. Four metabolites and parent were recovered in both urine and feces in all treatment groups. Parent compound accounted for most of the urinary and fecal radioactivity (77–90% and 1.8–6.2% of the administered dose, respectively). Metab. I was consistent with (methyl 2-[(amino)sulfonyl] benzoate); Metab. II - (2-[(amino)sulfonyl]-benzoic acid); and Metab. III was consistent with (methyl 2-[[[(amino)carbonyl]amino] sulfonyl] benzoate). Metab. I and II appeared to result from sequential hydrolysis reactions terminating in the formation of saccharin while Metab. III was formed by cleavage of the two ring structures. Total metabolites (in urine + feces of each group) accounted for approximately 5.4–8.2% of the administered dose. The metabolite profiles were qualitatively similar for urine and feces in that parent compound and the four metabolites (saccharin, Metabolites I, II, and III) were found in both matrices.

B. Toxicological Endpoints

The dose at which the NOAEL from the toxicology study identified as appropriate for use in risk assessment is used to estimate the toxicological level of concern (LOC). However, the LOAEL is sometimes used for risk assessment if no NOAEL was achieved in the toxicology study selected. An uncertainty factor (UF) is applied to reflect uncertainties inherent in the extrapolation from laboratory animal data to humans and in the variations in sensitivity among members of the human population as well as other unknowns. An UF of 100 is routinely used, 10X to account for interspecies differences and 10X for intra species differences.

For dietary risk assessment (other than cancer) the Agency uses the UF to calculate an acute or chronic reference dose (acute RfD or chronic RfD) where the RfD is equal to the NOAEL divided by the appropriate UF (RfD = NOAEL/UF). Where an additional safety factor is retained due to concerns unique to the FQPA, this additional factor is applied to the RfD by dividing the RfD by such additional factor. The acute or chronic Population Adjusted Dose (aPAD or cPAD) is a modification of the RfD to accommodate this type of FQPA Safety Factor.

For non-dietary risk assessments (other than cancer) the UF is used to determine the LOC. For example, when 100 is the appropriate UF (10X to account for interspecies differences and 10X for intraspecies differences) the LOC is 100. To estimate risk, a ratio of the NOAEL to exposures (margin of exposure (MOE) = NOAEL/exposure) is calculated and compared to the LOC.

The linear default risk methodology (Q*) is the primary method currently used by the Agency to quantify carcinogenic risk. The Q* approach assumes that any amount of exposure will lead to some degree of cancer risk. A Q* is calculated and used to estimate risk which represents a probability of occurrence of additional cancer cases (e.g., risk is expressed as 1 x 10^{-6} or one in a million). Under certain specific circumstances, MOE calculations will be used for the carcinogenic risk assessment. In this non-linear approach, a ''point of departure'' is identified below which carcinogenic effects are not expected. The point of departure is typically a NOAEL based on an endpoint related to cancer effects though it may be a different value derived from the dose response curve. To estimate risk, a ratio of the point of departure to exposure ($MOE_{cancer>}$ = point of departure/exposures) is calculated. A summary of the toxicological endpoints for metsulfuron methyl used for human risk assessment is shown in the following Table 2:

TABLE 2.—SUMMARY OF TOXICOLOGICAL DOSE AND ENDPOINTS FOR METSULFURON METHYL FOR USE IN HUMAN RISK ASSESSMENT

Exposure Scenario	Dose Used in Risk Assessment, UF	FQPA SF* and Level of Concern for Risk Assessment	Study and Toxicological Effects
Acute Dietary general population including infants and children	NA	NA	An endpoint attributable to a single dose was not identified. Quantitation of acute dietary risk is not appropriate
Chronic Dietary all populations	NOAEL= 25 mg/kg/day UF = 100 Chronic RfD = 0.25 mg/kg/day	FQPA SF = 1 cPAD = 0.25 mg/kg/day	Chronic/oncogenicity study in the rat LOAEL = 250 mg/kg/day based on decreased body weight and body weight gain.
Short- and Intermediate-Term Incidental Oral (1 to 30 days and 1 month to 6 months) (Residential)	NOAEL= 34 mg/kg/day	LOC for MOE = 100 (Residential)	2–generation reproduction study in rats based on decreased premating (F0) body weights in male and female rats; systemic effects were seen up to 13 weeks at the LOAEL of 342 mg/kg/day.
Short-, Intermediate-, and Long-Term Dermal (1 to 30 days; 1 month to 6 months; and > 6 months) (Residential)	NOAEL= 125 mg/kg/day	LOC for MOE = 100 (Residential)	21–day dermal toxicity in rabbits based on an increased incidence of diarrhea in rabbits at the LOAEL of 500 mg/kg/day.
Short- and Intermediate-TermInhalation (1 to 30 days and 1 month to 6 months) (Residential)	oral study NOAEL= 34 mg/kg/day (inhalation absorption rate = 100%)	LOC for MOE = 100 (Residential)	2–generation reproduction study in rats LOAEL = 342 mg/kg/day based on decreased body weights in premating (F0) animals for up to 13 weeks.
Long-Term Inhalation (6 months to lifetime) (Residential)	oral study NOAEL= 25 mg/kg/day (inhalation absorption rate = 100%)	LOC for MOE = 100 (Residential)	Chronic/oncogenicity study in the rat LOAEL = 250 mg/kg/day based on decreased body weight and body weight gain.
Cancer (oral, dermal, inhalation) - not likely to be carcinogenic.			

* The reference to the FQPA Safety Factor refers to any additional safety factor retained due to concerns unique to the FQPA.

C. Exposure Assessment

1. *Dietary exposure from food and feed uses.* Tolerances have been established (40 CFR 180.428) for the combined residues of metsulfuron methyl and its metabolite methyl 2-[[[[(4-methoxy-6-methyl-1,3,5-triazin-2-yl)amino]carbonyl]amino]sulfonyl]-4-hydroxybenzoate, in or on a variety of raw agricultural commodities. Tolerances have been established for residues of metsulfuron methyl on fat, meat, and meat byproducts of cattle, goats, hogs, horses, and sheep at 0.1 ppm; kidney of cattle, goats, hogs, horse, and sheep at 0.5 ppm, and milk at 0.05 ppm. Risk assessments were conducted by EPA to assess dietary exposures from metsulfuron methyl in food as follows:

i. *Acute exposure.* Acute dietary risk assessments are performed for a food-use pesticide if a toxicological study has indicated the possibility of an effect of concern occurring as a result of a one day or single exposure. No acute dietary endpoint attributable to a single dose was identified. Therefore, quantification of acute dietary risk was not performed.

ii. *Chronic exposure.* In conducting this chronic dietary risk assessment the Dietary Exposure Evaluation Model (DEEM®) analysis evaluated the individual food consumption as reported by respondents in the USDA 1989–1992 nationwide Continuing Surveys of Food Intake by Individuals (CSFII) and accumulated exposure to the chemical for each commodity. The following assumptions were made for the chronic exposure assessments: Tolerance residue levels, 100% crop treated (CT) for all commodities, and DEEM® defaults for all processing factors. In addition, the chemical iodosulfuron methyl recently received a favorable recommendation for tolerances on corn, field, grain at 0.03 ppm, and corn, field, stover and forage at 0.05 ppm. Since the major metabolite of iodosulfuron methyl is metsulfuron methyl, these tolerances were included in the dietary exposure assessment.

iii. *Cancer.* Since metsulfuron methyl has been classified as ''Not likely to be a human carcinogen'', a cancer risk assessment was not performed.

2. *Dietary exposure from drinking water.* The Agency lacks sufficient monitoring exposure data to complete a comprehensive dietary exposure analysis and risk assessment for metsulfuron methyl in drinking water. Because the Agency does not have comprehensive monitoring data, drinking water concentration estimates are made by reliance on simulation or modeling taking into account data on the physical characteristics of metsulfuron methyl.

The Agency uses the First Index Reservoir Screening Tool (FIRST) or the Pesticide Root Zone/Exposure Analysis Modeling System (PRZM/EXAMS), to produce estimates of pesticide concentrations in an index reservoir. The SCI-GROW model is used to predict pesticide concentrations in shallow ground water. For a screening-level assessment for surface water EPA will use FIRST (a tier 1 model) before using PRZM/EXAMS (a tier 2 model). The FIRST model is a subset of the PRZM/EXAMS model that uses a specific high-end runoff scenario for pesticides.

While both FIRST and PRZM/EXAMS incorporate an index reservoir environment, the PRZM/EXAMS model includes a percent crop area factor as an adjustment to account for the maximum percent crop coverage within a watershed or drainage basin.

None of these models include consideration of the impact processing (mixing, dilution, or treatment) of raw water for distribution as drinking water would likely have on the removal of pesticides from the source water. The primary use of these models by the Agency at this stage is to provide a coarse screen for sorting out pesticides for which it is highly unlikely that drinking water concentrations would ever exceed human health levels of concern.

Since the models used are considered to be screening tools in the risk assessment process, the Agency does not use estimated environmental concentrations (EECs) from these models to quantify drinking water exposure and risk as a %RfD or %PAD. Instead drinking water levels of comparison (DWLOCs) are calculated and used as a point of comparison against the model estimates of a pesticide's concentration in water. DWLOCs are theoretical upper limits on a pesticide's concentration in drinking water in light of total aggregate exposure to a pesticide in food, and from residential uses. Since DWLOCs address total aggregate exposure to metsulfuron methyl they are further discussed in the aggregate risk sections in Unit E.

Based on the PRZM/EXAMS used to estimate the concentration of metsulfuron methyl in surface water and FIRST to estimate the concentration of metsulfuron methyl as a metabolite of iodosulfuron methyl since FIRST has been used in estimating the drinking water values for corn use with the proposed label for iodosulfuron methyl and SCI-GROW models the EECs of metsulfuron methyl for acute exposures are estimated to be 1.37 parts per billion (ppb) for surface water and 0.104 ppb for ground water. The EECs for chronic exposures are estimated to be 0.332 ppb for surface water and 0.104 ppb for ground water.

3. *From non-dietary exposure*. The term ''residential exposure'' is used in this document to refer to non-occupational, non-dietary exposure (e.g., for lawn and garden pest control, indoor pest control, termiticides, and flea and tick control on pets).

Metsulfuron methyl is currently registered for use on the following residential non-dietary sites: ornamental turf such as lawns, parks, cemeteries, golf courses (fairways, aprons, tees, and roughs) and similar non-crop areas, It has been determined that there is a potential for exposure in residential settings during the application process for homeowners who purchase and use products containing metsulfuron methyl. There is also a potential for exposure from entering areas previously treated with metsulfuron methyl such as turf (i.e., lawns and parks) and golf courses that could lead to exposures for adults and children. As a result, risk assessments have been completed for both residential handler and postapplication scenarios. Based on the use pattern, short-term exposure is expected. The risk assessment was conducted using the following residential exposure assumptions: The assumptions and factors used in the risk calculations for handler exposure scenarios include:

• Exposure factors used to calculate daily exposures to handlers are based on applicable data if available. For lack of appropriate data, values from a scenario deemed similar enough by the assessor might be used.

• The Agency always considers the maximum application rates allowed by labels in its risk assessments to consider what is legally possible based on the label. If additional information such as average or typical rates are available, these values are also used to allow risk managers to make a more informed risk management decision.

The Agency bases calculations for residential risk assessments on what would reasonably be treated by homeowners such as the size of the lawn, or the size of a garden. This information was used by the Agency to define chemical values for handlers which in turn are coupled with unit exposure to calculate risks.

Noncancer risk were calculated using the Margins of Exposure (MOE) for two scenarios, (1) low pressure handwand and (2) hose-end sprayer. Residential risk assessments apply an additional FQPA safety factor to the risk when appropriate, which defines the level of concern. In the case of metsulfuron methyl, no additional safety factor (1x) is necessary to protect the safety of infants and children in assessing metsulfuron methyl risks and exposure.

Children may also be exposed by incidental non-dietary ingestion of pesticide residues on residential lawns from hand to mouth transfer. This scenario assumes that pesticide residues are transferred to the skin of toddlers playing on recreational or residential lawns and turfs and are subsequently ingested as a result of hand-to-mouth transfer. The method for estimating postapplication incidental ingestion dose from pesticide residues on turf is based on the following assumptions.

• On the day of application 5% of the application rate are available on the turfgrass as dislodgeable residue. The 5% transfer factor is based on data by Clothier (2000). (Science Advisory Council for Exposure Policy #12: Recommended Revisions to the Standard Operating Procedures (SOPs) for Residential Exposure Assessments; Revised February 22, 2001).

• Postapplication activities are assessed on the same day the pesticide is applied since it is assumed that toddlers could play on the lawn immediately after application. For subsequent days after application, an assumed 10% pesticide dissipation rate is used.

• The median surface area of both hands is 20 cm^2 for a toddler. Since the hand-to-mouth has been defined by the February 1999 Science Advisory Panel (SAP) as 1 to 3 fingers (5.7 to 17.1 cm^2) a screening level of 20 cm^2 was selected based on the assumption that each hand-to-mouth event equals 3 fingers (Science Advisory Council for Exposure Policy #12: Recommended Revisions to the Standard Operating Procedures (SOPs) for Residential Exposure Assessments; Revised February 22, 2001).

• It is assumed that there is a one-to-one relationship between the dislodgeable residues on the turf and on the surface area of the skin after contact.

• The mean rate of hand-to-mouth activity is 20 events/hr for toddlers age 2 to 5 years old for short-term exposure. The 1999 SAP recommended the use of the 90th percentile value of 20 events based on reported hourly frequencies of hand-to-mouth events in pre school children aged 2 to 5 years observations using video tapes by Reed et al. (Science Advisory Council for Exposure Policy #12: Recommended Revisions to the Standard Operating Procedures (SOPs) for Residential Exposure Assessments; Revised February 22, 2001).

• The duration of exposure for toddlers is assumed to be 2 hours per day. This is based on the 75th percentile value (i.e., 120 min/day) for playing on grass for ages 1 to 4 years and 5-11 years (Tsang and Klepeis 1996 as cited on pag 15–79 of EPA 1997, Exposure Factors Handbook EFH).

• Toddlers (age 3 years) used to represent the 1 to 6 year old group, are assumed to weigh 15 kg. This is the mean of the median values for male and female children (US EPA 1996a).

• A saliva extraction factor of 50% was used (Science Advisory Council for Exposure Policy # 12: Recommended Revisions to the Standard Operating

Procedures (SOPs) for Residential Exposure Assessments; Revised February 22, 2001).

These values were used to calculate the MOE for incidental ingestion of pesticide residues from hand to mouth transfer.

Children (toddlers) may be exposed postapplication through ingestion of pesticide treated turfgrass. This scenario assumes that turf is ingested by toddlers who play on treated areas (i.e., yards, playgrounds). The method for estimating postapplication ingestion exposure to pesticide residues in turfgrass is based on the following assumptions:

• On the day of application 5% of the application rate are available to be ingested. This is assumed to represent an upper-percentile input.

• Postapplication must be assessed on the same day the pesticide is applied because it is assumed that toddlers could play on the lawn immediately after application.

• The assumed ingestion rate for grass for toddlers (age 3 years) is 25 cm^2/day. This value is intended to represent the approximate area from which a child may grasp a handful of grass. This is assumed to represent an upper-percentile input.

• Toddlers (age 3 years), used to represent the 1 to 6 year old age group, are assumed to weigh 15 kg (U.S. EPA, 1996).

These values were then used to calculate the MOE for ingestion of pesticide treated turf. Children may be exposed postapplication through ingestion of soil from pesticide treated residential areas. This scenario assumes that pesticide residues in soil are ingested by toddlers who play on treated areas as a result of normal mouthing activities. The method for estimating postapplication ingestion exposure to pesticide residues in soil is based on the following assumptions:

• On the day of application, it is assumed that 100% of the application rate are located within the soil's uppermost 1 cm.

• Postapplication must be assessed on the same day the pesticide is applied because it is assumed that toddlers could play on the lawn or other outdoor treated area immediately after application.

• The assumed soil ingestion rate for children (ages 1-6) is 100 mg/day. This is the mean soil ingestion rate value recommended by EPA for use in exposure/risk assessments (U.S. EPA, 1996).

• Toddlers (age 3 years), used to represent the 1 to 6 year old age group, are assumed to weigh 15 kg (U.S. EPA, 1996).

These values were than used to calculate the MOE for soil ingestion of pesticide treated areas.

4. *Cumulative exposure to substances with a common mechanism of toxicity.* Section 408(b)(2)(D)(v) requires that, when considering whether to establish, modify, or revoke a tolerance, the Agency consider ''available information'' concerning the cumulative effects of a particular pesticide's residues and ''other substances that have a common mechanism of toxicity.''

EPA does not have, at this time, available data to determine whether metsulfuron methyl has a common mechanism of toxicity with other substances or how to include this pesticide in a cumulative risk assessment. Unlike other pesticides for which EPA has followed a cumulative risk approach based on a common mechanism of toxicity, metsulfuron methyl does not appear to produce a toxic metabolite produced by other substances. For the purposes of this tolerance action, therefore, EPA has not assumed that metsulfuron methyl has a common mechanism of toxicity with other substances. For information regarding EPA's efforts to determine which chemicals have a common mechanism of toxicity and to evaluate the cumulative effects of such chemicals, see the final rule for Bifenthrin Pesticide Tolerances (62 FR 62961, November 26, 1997).

D. Safety Factor for Infants and Children

1. *In general.* FFDCA section 408 provides that EPA shall apply an additional tenfold margin of safety for infants and children in the case of threshold effects to account for prenatal and postnatal toxicity and the completeness of the data base on toxicity and exposure unless EPA determines that a different margin of safety will be safe for infants and children. Margins of safety are incorporated into EPA risk assessments either directly through use of a MOE analysis or through using uncertainty (safety) factors in calculating a dose level that poses no appreciable risk to humans.

2. *Prenatal and postnatal sensitivity.* There is no quantitative or qualitative evidence of increased susceptibility in the pre-natal studies in rat and rabbit or in the multi-generation reproduction study evaluating pre- and post-natal exposure.

3. *Conclusion.* There is a complete toxicity data base for metsulfuron methyl and exposure data are complete or are estimated based on data that reasonably accounts for potential exposures. EPA determined that the 10X safety factor to protect infants and children should be removed. The FQPA factor is removed because there is no quantitative or qualitative evidence of increased susceptibility in the pre-natal studies in rat and rabbit or in the multi-generation reproduction study evaluating pre- and post-natal exposure; a developmental neurotoxicity study is not required, and there are no data deficiencies or residual uncertainties identified in the hazard and exposure databases for metsulfuron methyl. The only study outstanding for metsulfuron methyl is a 28-day inhalation (nose only) study which is required due to the concern for the occupational exposure via this route based on current use pattern.

E. Aggregate Risks and Determination of Safety

To estimate total aggregate exposure to a pesticide from food, drinking water, and residential uses, the Agency calculates DWLOCs which are used as a point of comparison against the model estimates of a pesticide's concentration in water (EECs). DWLOC values are not regulatory standards for drinking water. DWLOCs are theoretical upper limits on a pesticide's concentration in drinking water in light of total aggregate exposure to a pesticide in food and residential uses. In calculating a DWLOC, the Agency determines how much of the acceptable exposure (i.e., the PAD) is available for exposure through drinking water [e.g., allowable chronic water exposure (mg/kg/day) = cPAD - (average food + residential exposure)]. This allowable exposure through drinking water is used to calculate a DWLOC.

A DWLOC will vary depending on the toxic endpoint, drinking water consumption, and body weights. Default body weights and consumption values as used by the USEPA Office of Water are used to calculate DWLOCs: 2L/70 kg (adult male), 2L/60 kg (adult female), and 1L/10 kg (child). Default body weights and drinking water consumption values vary on an individual basis. This variation will be taken into account in more refined screening-level and quantitative drinking water exposure assessments. Different populations will have different DWLOCs. Generally, a DWLOC is calculated for each type of risk assessment used: acute, short-term, intermediate-term, chronic, and cancer.

When EECs for surface water and ground water are less than the calculated DWLOCs, EPA concludes with reasonable certainty that exposures

to the pesticide in drinking water (when considered along with other sources of exposure for which EPA has reliable data) would not result in unacceptable levels of aggregate human health risk at this time. Because EPA considers the aggregate risk resulting from multiple exposure pathways associated with a pesticide's uses, levels of comparison in drinking water may vary as those uses change. If new uses are added in the future, EPA will reassess the potential impacts of residues of the pesticide in drinking water as a part of the aggregate risk assessment process.

1. *Acute risk*. Because there was no acute endpoint attributable to a single dose identified for metsulfuron methyl, EPA does not expect metsulfuron methyl to pose an acute risk.

2. *Chronic risk*. Using the exposure assumptions described in this unit for chronic exposure, EPA has concluded that exposure to metsulfuron methyl from food will utilize < 1% of the cPAD for the U.S. population, < 1% of the cPAD for all infants and <1% of the cPAD for children 1–6 years old. Based on the use pattern, chronic residential exposure to residues of metsulfuron methyl is not expected. In addition, there is potential for chronic dietary exposure to metsulfuron methyl in drinking water. After calculating DWLOCs and comparing them to the EECs for surface and ground water, EPA does not expect the aggregate exposure to exceed 100% of the cPAD, as shown in the following Table 3:

TABLE 3.—AGGREGATE RISK ASSESSMENT FOR CHRONIC (NON-CANCER) EXPOSURE TO METSULFURON METHYL

Population Subgroup	cPAD mg/kg/day	% cPAD (Food)	Surface Water EEC (ppb)	Ground Water EEC (ppb)	Chronic DWLOC (ppb)
U.S. Population	0.25	<1	0.332	0.104	8700
Children 1–6 years	0.25	<1	0.332	0.104	2500
Females 13–50 years	0.25	<1	0.332	0.104	7500
Males 13–19 years	0.25	<1	0.332	0.104	8700

3. *Short-term risk*. Short-term aggregate exposure takes into account residential exposure plus chronic exposure to food and water (considered to be a background exposure level).

Metsulfuron methyl is currently registered for use that could result in short-term residential exposure and the Agency has determined that it is appropriate to aggregate chronic food and water and short-term exposures for metsulfuron methyl.

Using the exposure assumptions described in this unit for short-term exposures, EPA has concluded that food and residential exposures aggregated result in aggregate MOEs of 12,000 for children-short term aggregate, and 39,000 for adults-short term aggregate. These aggregate MOEs do not exceed the Agency's level of concern for aggregate exposure to food and residential uses. In addition, short-term DWLOCs were calculated and compared to the EECs for chronic exposure of metsulfuron methyl in ground and surface water. After calculating DWLOCs and comparing them to the EECs for surface and ground water, EPA does not expect short-term aggregate exposure to exceed the Agency's level of concern, as shown in the following Table 4:

TABLE 4.—AGGREGATE RISK ASSESSMENT FOR SHORT-TERM EXPOSURE TO METSULFURON METHYL

Population Subgroup	Aggregate MOE (Food + Residential)	Aggregate Level of Concern (LOC)	Surface Water EEC (ppb)	Ground Water EEC (ppb)	Short-Term DWLOC (ppb)
Children	12,000	100	0.332	0.104	3,400
Adult	39,000	100	0.332	0.104	12,000

4. *Intermediate-term risk*. Intermediate-term aggregate exposure takes into account residential exposure plus chronic exposure to food and water (considered to be a background exposure level).

Though residential exposure could occur with the use of metsulfuron methyl, the potential intermediate-term exposures were not aggregated with chronic dietary food and water exposures because the short- and intermediate-term endpoints are the same (NOAEL = 34 mg/kg/day) and the short-term aggregate risk assessment which includes the same routes of exposure is worst-case and below the Agency level of concern. Therefore, based on the best available data and current policies, potential risks do not exceed the Agency's level of concern.

5. *Aggregate cancer risk for U.S. population*. Since metsulfuron methyl has been classified as ''Not likely to be a human carcinogen'', metsulfuron methyl is not expected to pose a cancer risk.

6. *Determination of safety*. Based on these risk assessments, EPA concludes that there is a reasonable certainty that no harm will result to the general population, and to infants and children from aggregate exposure to metsulfuron methyl residues.

IV. Other Considerations

A. Analytical Enforcement Methodology

Adequate methods are available for enforcement of tolerances for residues of metsulfuron methyl in/on plant and animal commodities. PAM Vol. II lists Methods I and III which are respectively capable of determining residues of metsulfuron methyl *per se* (LOQ = 0.02 ppm for wheat grain; 0.05 ppm for forage and straw) and combined Metabolites A and A1 (LOQ = ppm for grain and forage; 0.1 ppm for straw); Method II determines parent compound in ruminant tissues and milk to a lower limit of 0.02–0.05 ppm.

B. International Residue Limits

There are currently no Codex, Canadian, or Mexican maximum residue levels (MRLs) for metsulfuron methyl, thus international harmonization is not an issue.

C. Conditions

A 28–day inhalation (nose-only) study is required as a condition of registration.

V. Conclusion

Therefore, tolerances are established for combined residues of metsulfuron methyl, methyl 2-[[[[(4-methoxy-6-methyl-1,3,5- triazin-2-yl)amino]carbonyl] amino]sulfonyl]benzoate and its metabolite methyl 2-[[[[(4-methoxy-6-methyl-1,3,5-triazin-2-yl) amino]carbonyl]amino]sulfonyl]- 4-hydroxybenzoate in or on sorghum, grain, forage at 0.2 ppm; sorghum, grain, grain at 0.1 ppm; and sorghum, grain, stover at 0.2 ppm. The text of paragraph (b) is removed and reserved.

VI. Objections and Hearing Requests

Under section 408(g) of the FFDCA, as amended by the FQPA, any person may file an objection to any aspect of this regulation and may also request a hearing on those objections. The EPA procedural regulations which govern the submission of objections and requests for hearings appear in 40 CFR part 178. Although the procedures in those regulations require some modification to reflect the amendments made to the FFDCA by the FQPA of 1996, EPA will continue to use those procedures, with appropriate adjustments, until the necessary modifications can be made. The new section 408(g) provides essentially the same process for persons to ''object'' to a regulation for an exemption from the requirement of a tolerance issued by EPA under new section 408(d), as was provided in the old FFDCA sections 408 and 409. However, the period for filing objections is now 60 days, rather than 30 days.

A. What Do I Need to Do to File an Objection or Request a Hearing?

You must file your objection or request a hearing on this regulation in accordance with the instructions provided in this unit and in 40 CFR part 178. To ensure proper receipt by EPA, you must identify docket ID number OPP–2002–0160 in the subject line on the first page of your submission. All requests must be in writing, and must be mailed or delivered to the Hearing Clerk on or before October 7, 2002.

1. *Filing the request*. Your objection must specify the specific provisions in the regulation that you object to, and the grounds for the objections (40 CFR 178.25). If a hearing is requested, the objections must include a statement of the factual issues(s) on which a hearing is requested, the requestor's contentions on such issues, and a summary of any evidence relied upon by the objector (40 CFR 178.27). Information submitted in connection with an objection or hearing request may be claimed confidential by marking any part or all of that information as CBI. Information so marked will not be disclosed except in accordance with procedures set forth in 40 CFR part 2. A copy of the information that does not contain CBI must be submitted for inclusion in the public record. Information not marked confidential may be disclosed publicly by EPA without prior notice.

Mail your written request to: Office of the Hearing Clerk (1900), Environmental Protection Agency, 1200 Pennsylvania Ave., NW., Washington, DC 20460. You may also deliver your request to the Office of the Hearing Clerk in Rm. C400, Waterside Mall, 401 M St., SW., Washington, DC 20460. The Office of the Hearing Clerk is open from 8 a.m. to 4 p.m., Monday through Friday, excluding legal holidays. The telephone number for the Office of the Hearing Clerk is (202) 260–4865.

2. *Tolerance fee payment*. If you file an objection or request a hearing, you must also pay the fee prescribed by 40 CFR 180.33(i) or request a waiver of that fee pursuant to 40 CFR 180.33(m). You must mail the fee to: EPA Headquarters Accounting Operations Branch, Office of Pesticide Programs, P.O. Box 360277M, Pittsburgh, PA 15251. Please identify the fee submission by labeling it ''Tolerance Petition Fees.''

EPA is authorized to waive any fee requirement ''when in the judgement of the Administrator such a waiver or refund is equitable and not contrary to the purpose of this subsection.'' For additional information regarding the waiver of these fees, you may contact James Tompkins by phone at (703) 305–5697, by e-mail at tompkins.jim@epa.gov, or by mailing a request for information to Mr. Tompkins at Registration Division (7505C), Office of Pesticide Programs, Environmental Protection Agency, 1200 Pennsylvania Ave., NW., Washington, DC 20460.

If you would like to request a waiver of the tolerance objection fees, you must mail your request for such a waiver to: James Hollins, Information Resources and Services Division (7502C), Office of Pesticide Programs, Environmental Protection Agency, 1200 Pennsylvania Ave., NW., Washington, DC 20460.

3. *Copies for the Docket*. In addition to filing an objection or hearing request with the Hearing Clerk as described in Unit VI.A., you should also send a copy of your request to the PIRIB for its inclusion in the official record that is described in Unit I.B.2. Mail your copies, identified by docket ID number OPP–2002–0160, to: Public Information and Records Integrity Branch, Information Resources and Services Division (7502C), Office of Pesticide Programs, Environmental Protection Agency, 1200 Pennsylvania Ave., NW., Washington, DC 20460. In person or by courier, bring a copy to the location of the PIRIB described in Unit I.B.2. You may also send an electronic copy of your request via e-mail to: opp-docket@epa.gov. Please use an ASCII file format and avoid the use of special characters and any form of encryption. Copies of electronic objections and hearing requests will also be accepted on disks in WordPerfect 6.1/8.0 or ASCII file format. Do not include any CBI in your electronic copy. You may also submit an electronic copy of your request at many Federal Depository Libraries.

B. When Will the Agency Grant a Request for a Hearing?

A request for a hearing will be granted if the Administrator determines that the material submitted shows the following: There is a genuine and substantial issue of fact; there is a reasonable possibility that available evidence identified by the requestor would, if established resolve one or more of such issues in favor of the requestor, taking into account uncontested claims or facts to the contrary; and resolution of the factual issues(s) in the manner sought by the requestor would be adequate to justify the action requested (40 CFR 178.32).

VII. Regulatory Assessment Requirements

This final rule establishes a tolerance under FFDCA section 408(d) in response to a petition submitted to the Agency. The Office of Management and Budget (OMB) has exempted these types of actions from review under Executive Order 12866, entitled *Regulatory Planning and Review* (58 FR 51735, October 4, 1993). Because this rule has been exempted from review under Executive Order 12866 due to its lack of significance, this rule is not subject to Executive Order 13211, *Actions Concerning Regulations That Significantly Affect Energy Supply, Distribution, or Use* (66 FR 28355, May 22, 2001). This final rule does not contain any information collections subject to OMB approval under the Paperwork Reduction Act (PRA), 44 U.S.C. 3501 *et seq.*, or impose any enforceable duty or contain any unfunded mandate as described under Title II of the Unfunded Mandates Reform Act of 1995 (UMRA) (Public Law 104–4). Nor does it require any special considerations under Executive Order 12898, entitled *Federal Actions to Address Environmental Justice in Minority Populations and Low-Income Populations* (59 FR 7629, February 16,

1994); or OMB review or any Agency action under Executive Order 13045, entitled *Protection of Children from Environmental Health Risks and Safety Risks* (62 FR 19885, April 23, 1997). This action does not involve any technical standards that would require Agency consideration of voluntary consensus standards pursuant to section 12(d) of the National Technology Transfer and Advancement Act of 1995 (NTTAA), Public Law 104–113, section 12(d) (15 U.S.C. 272 note). Since tolerances and exemptions that are established on the basis of a petition under FFDCA section 408(d), such as the tolerance in this final rule, do not require the issuance of a proposed rule, the requirements of the Regulatory Flexibility Act (RFA) (5 U.S.C. 601 *et seq.*) do not apply. In addition, the Agency has determined that this action will not have a substantial direct effect on States, on the relationship between the national government and the States, or on the distribution of power and responsibilities among the various levels of government, as specified in Executive Order 13132, entitled *Federalism*(64 FR 43255, August 10, 1999). Executive Order 13132 requires EPA to develop an accountable process to ensure ''meaningful and timely input by State and local officials in the development of regulatory policies that have federalism implications.'' ''Policies that have federalism implications'' is defined in the Executive Order to include regulations that have ''substantial direct effects on the States, on the relationship between the national government and the States, or on the distribution of power and responsibilities among the various levels of government.'' This final rule directly regulates growers, food processors, food handlers and food retailers, not States. This action does not alter the relationships or distribution of power and responsibilities established by Congress in the preemption provisions of FFDCA section 408(n)(4). For these same reasons, the Agency has determined that this rule does not have any ''tribal implications'' as described in Executive Order 13175, entitled *Consultation and Coordination with Indian Tribal Governments* (65 FR 67249, November 6, 2000). Executive Order 13175, requires EPA to develop an accountable process to ensure ''meaningful and timely input by tribal officials in the development of regulatory policies that have tribal implications.'' ''Policies that have tribal implications'' is defined in the Executive Order to include regulations that have ''substantial direct effects on one or more Indian tribes, on the relationship between the Federal Government and the Indian tribes, or on the distribution of power and responsibilities between the Federal Government and Indian tribes.'' This rule will not have substantial direct effects on tribal governments, on the relationship between the Federal Government and Indian tribes, or on the distribution of power and responsibilities between the Federal Government and Indian tribes, as specified in Executive Order 13175. Thus, Executive Order 13175 does not apply to this rule.

VIII. Submission to Congress and the Comptroller General

The Congressional Review Act, 5 U.S.C. 801 *et seq.*, as added by the Small Business Regulatory Enforcement Fairness Act of 1996, generally provides that before a rule may take effect, the agency promulgating the rule must submit a rule report, which includes a copy of the rule, to each House of the Congress and to the Comptroller General of the United States. EPA will submit a report containing this rule and other required information to the U.S. Senate, the U.S. House of Representatives, and the Comptroller General of the United States prior to publication of this final rule in the **Federal Register**. This final rule is not a ''major rule'' as defined by 5 U.S.C. 804(2).

List of Subjects in 40 CFR Part 180

Environmental protection, Administrative practice and procedure, Agricultural commodities, Pesticides and pests, Reporting and recordkeeping requirements.

Dated: July 24, 2002

Peter Caulkins,

Acting Director, Registration Division, Office of Pesticide Programs.

Therefore, 40 CFR chapter I is amended as follows:

PART 180—[AMENDED]

1. The authority citation for part 180 continues to read as follows:

Authority: 21 U.S.C. 321(q), 346(a) and 371.

2. Section 180.428 is amended as follows:

i. By alphabetically adding entries for the commodities ''sorghum, grain, forage;'' ''sorghum, grain, grain'', and ''sorghum, grain, stover'' to the table in paragraph (a)(1) as set forth below.

ii. The text of paragraph (b) is removed and reserved.

§ 180.428 Metsulfuron methyl; tolerances for residues.

(a) General. (1) * * *

Commodity	Parts per million
* * *	* *
Sorghum, grain, forage ...	0.2
Sorghum, grain, grain	0.1
Sorghum, grain, stover ...	0.2
* * *	* *

(b) *Section 18 emergency exemptions.* [Reserved]

* * * * *

[FR Doc. 02–19807 Filed 8–6–02; 8:45 am]

BILLING CODE 6560–50–S

ENVIRONMENTAL PROTECTION AGENCY

40 CFR Part 180

[OPP–2002–0148; FRL–7188–3]

2-Propenoic acid, 2-methyl-, polymer with ethyl 2-propenoate and methyl 2-methyl-2-propenoate, ammonium salt; Tolerance Exemption

AGENCY: Environmental Protection Agency (EPA).

ACTION: Final rule.

SUMMARY: This regulation establishes an exemption from the requirement of a tolerance for residues of 2-propenoic acid, 2-methyl-, polymer with ethyl 2-propenoate and methyl 2-methyl-2-propenoate, ammonium salt; when used as an inert ingredient in or on growing crops, when applied to raw agricultural commodities after harvest, or to animals. MeadWestaco Corporation submitted a petition to EPA under the Federal Food, Drug, and Cosmetic Act (FFDCA), as amended by the Food Quality Protection Act (FQPA) of 1996 requesting an exemption from the requirement of a tolerance. This regulation eliminates the need to establish a maximum permissible level for residues of 2-propenoic acid, 2-methyl-, polymer with ethyl 2-propenoate and methyl 2-methyl-2-propenoate, ammonium salt.

DATES: This regulation is effective August 7, 2002. Objections and requests for hearings, identified by docket ID number OPP–2002–0148, must be received on or before October 7, 2002.

ADDRESSES: Written objections and hearing requests may be submitted by mail, in person, or by courier. Please follow the detailed instructions for each method as provided in Unit VIII. of the **SUPPLEMENTARY INFORMATION.** To ensure proper receipt by EPA, your objections and hearing requests must identify

docket ID number OPP–2002–0148 in the subject line on the first page of your response.

FOR FURTHER INFORMATION CONTACT: By mail: Bipin Gandhi, Registration Division (7505C), Office of Pesticide Programs, Environmental Protection Agency, 1200 Pennsylvania Ave., NW., Washington, DC 20460; telephone number: (703) 308–8380; e-mail address: gandhi.bipin@epa.gov.

SUPPLEMENTARY INFORMATION:

I. General Information

A. Does this Action Apply to Me?

You may be affected by this action if you are an agricultural producer, food manufacturer, or pesticide manufacturer. Potentially affected categories and entities may include, but are not limited to:

Categories	NAICS codes	Examples of potentially affected entities
Industry	111 112 311 32532	Crop production Animal production Food manufacturing Pesticide manufacturing

This listing is not intended to be exhaustive, but rather provides a guide for readers regarding entities likely to be affected by this action. Other types of entities not listed in the table could also be affected. The North American Industrial Classification System (NAICS) codes have been provided to assist you and others in determining whether or not this action might apply to certain entities. If you have questions regarding the applicability of this action to a particular entity, consult the person listed under **FOR FURTHER INFORMATION CONTACT**.

B. How Can I Get Additional Information, Including Copies of this Document and Other Related Documents?

1. *Electronically.* You may obtain electronic copies of this document, and certain other related documents that might be available electronically, from the EPA Internet Home Page at http://www.epa.gov/. To access this document, on the Home Page select ''Laws and Regulations,'' ''Regulations and Proposed Rules,'' and then look up the entry for this document under the ''**Federal Register**—Environmental Documents.'' You can also go directly to the **Federal Register** listings at http://www.epa.gov/fedrgstr/.A frequently updated electronic version of 40 CFR part 180 is available at http://www.access.gpo.gov/nara/cfr/cfrhtml_00/Title_40/40cfr180_00.html, a beta site currently under development.

2. *In person.* The Agency has established an official record for this action under docket ID number OPP–2002–0148. The official record consists of the documents specifically referenced in this action, and other information related to this action, including any information claimed as Confidential Business Information (CBI). This official record includes the documents that are physically located in the docket, as well as the documents that are referenced in those documents. The public version of the official record does not include any information claimed as CBI. The public version of the official record, which includes printed, paper versions of any electronic comments submitted during an applicable comment period is available for inspection in the Public Information and Records Integrity Branch (PIRIB), Rm. 119, Crystal Mall #2, 1921 Jefferson Davis Hwy., Arlington, VA, from 8:30 a.m. to 4 p.m., Monday through Friday, excluding legal holidays. The PIRIB telephone number is (703) 305–5805.

II. Background and Statutory Findings

In the **Federal Register** of (May 23, 2002, 67 FR 36176) (FRL–6834–9), EPA issued a notice pursuant to section 408 of the FFDCA, 21 U.S.C. 346a, as amended by the FQPA (Public Law 104–170), announcing the filing of a pesticide petition (PP 2E6411) by MeadWestvaco Corporation, 3950 Faber Place Drive, N. Charleston, SC 29405. This notice included a summary of the petition prepared by the petitioner. There were no comments received in response to the notice of filing.

The petition requested that 40 CFR 180.1001 (c) and (e) be amended by establishing an exemption from the requirement of a tolerance for residues of 2-propenoic acid, 2-methyl-,polymer with ethyl 2-propenoate and methyl 2-methyl-2-propenoate, ammonium salt; CAS Registration No. 55989–05–4.

Section 408(c)(2)(A)(i) of the FFDCA allows EPA to establish an exemption from the requirement for a tolerance (the legal limit for a pesticide chemical residue in or on a food) only if EPA determines that the tolerance is ''safe.'' Section 408(c)(2)(A)(ii) defines ''safe'' to mean that ''there is a reasonable certainty that no harm will result from aggregate exposure to the pesticide chemical residue, including all anticipated dietary exposures and all other exposures for which there is reliable information.'' This includes exposure through drinking water and in residential settings, but does not include occupational exposure. Section 408(b)(2)(C) requires EPA to give special consideration to exposure of infants and children to the pesticide chemical residue in establishing an exemption from the requirement of a tolerance and to ''ensure that there is a reasonable certainty that no harm will result to infants and children from aggregate exposure to the pesticide chemical residue. . .'' and specifies factors EPA is to consider in establishing an exemption.

III. Inert Ingredient Definition

Inert ingredients are all ingredients that are not active ingredients as defined in 40 CFR 153.125 and include, but are not limited to, the following types of ingredients (except when they have a pesticidal efficacy of their own): Solvents such as alcohols and hydrocarbons; surfactants such as polyoxyethylene polymers and fatty acids; carriers such as clay and diatomaceous earth; thickeners such as carrageenan and modified cellulose; wetting, spreading, and dispersing agents; propellants in aerosol dispensers; microencapsulating agents; and emulsifiers. The term ''inert'' is not intended to imply nontoxicity; the ingredient may or may not be chemically active. Generally, EPA has exempted inert ingredients from the requirement of a tolerance based on the low toxicity of the individual inert ingredients.

IV. Risk Assessment and Statutory Findings

EPA establishes exemptions from the requirement of a tolerance only in those cases where it can be clearly demonstrated that the risks from aggregate exposure to pesticide chemical residues under reasonably foreseeable circumstances will pose no appreciable risks to human health. In order to determine the risks from aggregate exposure to pesticide inert ingredients, the Agency considers the toxicity of the inert in conjunction with possible exposure to residues of the inert ingredient through food, drinking water, and through other exposures that occur as a result of pesticide use in residential settings. If EPA is able to determine that a finite tolerance is not necessary to ensure that there is a reasonable certainty that no harm will result from aggregate exposure to the inert ingredient, an exemption from the requirement of a tolerance may be established.

Consistent with section 408(b)(2)(D) of FFDCA, EPA has reviewed the available scientific data and other relevant information in support of this

action and considered its validity, completeness and reliability and the relationship of this information to human risk. EPA has also considered available information concerning the variability of the sensitivities of major identifiable subgroups of consumers, including infants and children. In the case of certain chemical substances that are defined as polymers, the Agency has established a set of criteria to identify categories of polymers that should present minimal or no risk. The definition of a polymer is given in 40 CFR 723.250(b). The following exclusion criteria for identifying these low risk polymers are described in 40 CFR 723.250(d).

1. The polymer, 2-propenoic acid, 2-methyl-, polymer with ethyl 2-propenoate and methyl 2-methyl-2-propenoate, ammonium salt, is not a cationic polymer nor is it reasonably anticipated to become a cationic polymer in a natural aquatic environment.

2. The polymer does contain as an integral part of its composition the atomic elements carbon, hydrogen, and oxygen and nitrogen.

3. The polymer does not contain as an integral part of its composition, except as impurities, any element other than those listed in 40 CFR 723.250(d)(2)(ii).

4. The polymer is neither designed nor can it be reasonably anticipated to substantially degrade, decompose, or depolymerize.

5. The polymer is manufactured or imported from monomers and/or reactants that are already included on the TSCA Chemical Substance Inventory or manufactured under an applicable TSCA section 5 exemption.

6. The polymer is not a water absorbing polymer with a number average molecular weight (MW) greater than or equal to (in amu) 10,000.

Additionally, the polymer, 2-propenoic acid, 2-methyl-, polymer with ethyl 2-propenoate and methyl 2-methyl-2-propenoate, ammonium salt, also meets as required the following exemption criteria specified in 40 CFR 723.250(e).

7. The polymer's number average molecular weight (MW) of (in amu) 18,900 is greater than or equal to 10,000. The polymer contains less than 2% oligomeric material below MW 500 and less than 5% oligomeric material below MW 1,000.

Thus, 2-propenoic acid, 2-methyl-, polymer with ethyl 2-propenoate and methyl 2-methyl-2-propenoate, ammonium salt meets all the criteria for a polymer to be considered low risk under 40 CFR 723.250. Based on its conformance to the above criteria, no mammalian toxicity is anticipated from dietary, inhalation, or dermal exposure to 2-propenoic acid, 2-methyl-, polymer with ethyl 2-propenoate and methyl 2-methyl-2-propenoate, ammonium salt.

V. Aggregate Exposures

For the purposes of assessing potential exposure under this exemption, EPA considered that 2-propenoic acid, 2-methyl-, polymer with ethyl 2-propenoate and methyl 2-methyl-2-propenoate, ammonium salt could be present in all raw and processed agricultural commodities and drinking water, and that non-occupational non-dietary exposure was possible. The number average MW of 2-propenoic acid, 2-methyl-, polymer with ethyl 2-propenoate and methyl 2-methyl-2-propenoate, ammonium salt is (in amu) 18,900. Generally, a polymer of this size would be poorly absorbed through the intact gastrointestinal tract or through intact human skin. Since 2-propenoic acid, 2-methyl-, polymer with ethyl 2-propenoate and methyl 2-methyl-2-propenoate, ammonium salt conform to the criteria that identify a low risk polymer, there are no concerns for risks associated with any potential exposure scenarios that are reasonably foreseeable. The Agency has determined that a tolerance is not necessary to protect the public health.

VI. Cumulative Effects

Section 408 (b)(2)(D)(v) of FFDCA requires that, when considering whether to establish, modify, or revoke a tolerance or tolerance exemption, the Agency consider ''available information'' concerning the cumulative effects of a particular chemical's residues and ''other substances that have a common mechanism of toxicity.'' The Agency has not made any conclusions as to whether or not 2-propenoic acid, 2-methyl-, polymer with ethyl 2-propenoate and methyl 2-methyl-2-propenoate, ammonium salt share a common mechanism of toxicity with any other chemicals. However, 2-propenoic acid, 2-methyl-, polymer with ethyl 2-propenoate and methyl 2-methyl-2-propenoate, ammonium salt conform to the criteria that identify a low risk polymer. Due to the expected lack of toxicity based on the above conformance, the Agency has determined that a cumulative risk assessment is not necessary.

VII. Determination of Safety for U.S. Population

Based on the conformance to the criteria used to identify a low risk polymer, EPA concludes that there is a reasonable certainty of no harm to the U.S. population from aggregate exposure to residues of 2-propenoic acid, 2-methyl-, polymer with ethyl 2-propenoate and methyl 2-methyl-2-propenoate, ammonium salt.

VIII. Determination of Safety for Infants and Children

FFDCA section 408 provides that EPA shall apply an additional tenfold margin of safety for infants and children in the case of threshold effects to account for prenatal and postnatal toxicity and the completeness of the data base unless EPA concludes that a different margin safety will be safe for infants and children. Due to the expected low toxicity of 2-propenoic acid, 2-methyl-, polymer with ethyl 2-propenoate and methyl 2-methyl-2-propenoate, ammonium salt, EPA has not used a safety factor analysis to assess the risk. For the same reasons the additional tenfold safety factor is unnecessary.

IX. Other Considerations

A. Endocrine Disruptors

There is no available evidence that 2-propenoic acid, 2-methyl-, polymer with ethyl 2-propenoate and methyl 2-methyl-2-propenoate, ammonium salt is an endocrine disruptor.

B. Existing Exemptions from a Tolerance

There are no existing exemptions from the requirement of a tolerance.

C. Analytical Enforcement Methodology

An analytical method is not required for enforcement purposes since the Agency is establishing an exemption from the requirement of a tolerance without any numerical limitation.

D. International Tolerances

The Agency is not aware of any country requiring a tolerance for 2-propenoic acid, 2-methyl-, polymer with ethyl 2-propenoate and methyl 2-methyl-2-propenoate, ammonium salt nor have any CODEX Maximum Residue Levels (MRLs) been established for any food crops at this time.

X. Conclusion

Accordingly, EPA finds that exempting residues of 2-propenoic acid, 2-methyl-, polymer with ethyl 2-propenoate and methyl 2-methyl-2-propenoate, ammonium salt from the requirement of a tolerance will be safe.

XI. Objections and Hearing Requests

Under section 408(g) of the FFDCA, as amended by the FQPA, any person may file an objection to any aspect of this regulation and may also request a hearing on those objections. The EPA

procedural regulations which govern the submission of objections and requests for hearings appear in 40 CFR part 178. Although the procedures in those regulations require some modification to reflect the amendments made to the FFDCA by the FQPA of 1996, EPA will continue to use those procedures, with appropriate adjustments, until the necessary modifications can be made. The new section 408(g) provides essentially the same process for persons to ''object '' to a regulation for an exemption from the requirement of a tolerance issued by EPA under new section 408(d), as was provided in the old FFDCA sections 408 and 409. However, the period for filing objections is now 60 days, rather than 30 days.

A. What Do I Need to Do to File an Objection or Request a Hearing?

You must file your objection or request a hearing on this regulation in accordance with the instructions provided in this unit and in 40 CFR part 178. To ensure proper receipt by EPA, you must identify docket ID number OPP–2002–0148 in the subject line on the first page of your submission. All requests must be in writing, and must be mailed or delivered to the Hearing Clerk on or before October 7, 2002.

1. *Filing the request*. Your objection must specify the specific provisions in the regulation that you object to, and the grounds for the objections (40 CFR 178.25). If a hearing is requested, the objections must include a statement of the factual issues(s) on which a hearing is requested, the requestor's contentions on such issues, and a summary of any evidence relied upon by the objector (40 CFR 178.27). Information submitted in connection with an objection or hearing request may be claimed confidential by marking any part or all of that information as CBI. Information so marked will not be disclosed except in accordance with procedures set forth in 40 CFR part 2. A copy of the information that does not contain CBI must be submitted for inclusion in the public record. Information not marked confidential may be disclosed publicly by EPA without prior notice.

Mail your written request to: Office of the Hearing Clerk (1900), Environmental Protection Agency, 1200 Pennsylvania Ave., NW., Washington, DC 20460. You may also deliver your request to the Office of the Hearing Clerk in Rm. M3708, Waterside Mall, 1200 Pennsylvania Ave., NW., Washington, DC 20460. The Office of the Hearing Clerk is open from 8 a.m. to 4 p.m., Monday through Friday, excluding legal holidays. The telephone number for the Office of the Hearing Clerk is (202) 260–4865.

2. *Tolerance fee payment*. If you file an objection or request a hearing, you must also pay the fee prescribed by 40 CFR 180.33(i) or request a waiver of that fee pursuant to 40 CFR 180.33(m). You must mail the fee to: EPA Headquarters Accounting Operations Branch, Office of Pesticide Programs, P.O. Box 360277M, Pittsburgh, PA 15251. Please identify the fee submission by labeling it ''Tolerance Petition Fees.''

EPA is authorized to waive any fee requirement ''when in the judgement of the Administrator such a waiver or refund is equitable and not contrary to the purpose of this subsection.'' For additional information regarding the waiver of these fees, you may contact James Tompkins by phone at (703) 305–5697, by e-mail at tompkins.jim@epa.gov, or by mailing a request for information to Mr. Tompkins at Registration Division (7505C), Office of Pesticide Programs, Environmental Protection Agency, 1200 Pennsylvania Ave., NW., Washington, DC 20460.

If you would like to request a waiver of the tolerance objection fees, you must mail your request for such a waiver to: James Hollins, Information Resources and Services Division (7502C), Office of Pesticide Programs, Environmental Protection Agency, 1200 Pennsylvania Ave., NW., Washington, DC 20460.

3. *Copies for the docket*. In addition to filing an objection or hearing request with the Hearing Clerk as described in Unit VIII.A., you should also send a copy of your request to the PIRIB for its inclusion in the official record that is described in Unit I.B.2. Mail your copies, identified by docket ID number OPP–2002–0148, to: Public Information and Records Integrity Branch, Information Resources and Services Division (7502C), Office of Pesticide Programs, Environmental Protection Agency, 1200 Pennsylvania Ave., NW., Washington, DC 20460. In person or by courier, bring a copy to the location of the PIRIB described in Unit I.B.2. You may also send an electronic copy of your request via e-mail to: opp-docket@epa.gov. Please use an ASCII file format and avoid the use of special characters and any form of encryption. Copies of electronic objections and hearing requests will also be accepted on disks in WordPerfect 6.1/8.0 or ASCII file format. Do not include any CBI in your electronic copy. You may also submit an electronic copy of your request at many Federal Depository Libraries.

B. When Will the Agency Grant a Request for a Hearing?

A request for a hearing will be granted if the Administrator determines that the material submitted shows the following: There is a genuine and substantial issue of fact; there is a reasonable possibility that available evidence identified by the requestor would, if established resolve one or more of such issues in favor of the requestor, taking into account uncontested claims or facts to the contrary; and resolution of the factual issues(s) in the manner sought by the requestor would be adequate to justify the action requested (40 CFR 178.32).

XII. Regulatory Assessment Requirements

This final rule establishes an exemption from the tolerance requirement under FFDCA section 408(d) in response to a petition submitted to the Agency. The Office of Management and Budget (OMB) has exempted these types of actions from review under Executive Order 12866, entitled *Regulatory Planning and Review* (58 FR 51735, October 4, 1993). Because this rule has been exempted from review under Executive Order 12866 due to its lack of significance, this rule is not subject to Executive Order 13211, *Actions Concerning Regulations That Significantly Affect Energy Supply, Distribution, or Use* (66 FR 28355, May 22, 2001). This final rule does not contain any information collections subject to OMB approval under the Paperwork Reduction Act (PRA), 44 U.S.C. 3501 *et seq.*, or impose any enforceable duty or contain any unfunded mandate as described under Title II of the Unfunded Mandates Reform Act of 1995 (UMRA) (Public Law 104–4). Nor does it require any special considerations under Executive Order 12898, entitled *Federal Actions to Address Environmental Justice in Minority Populations and Low-Income Populations* (59 FR 7629, February 16, 1994); or OMB review or any Agency action under Executive Order 13045, entitled *Protection of Children from Environmental Health Risks and Safety Risks* (62 FR 19885, April 23, 1997). This action does not involve any technical standards that would require Agency consideration of voluntary consensus standards pursuant to section 12(d) of the National Technology Transfer and Advancement Act of 1995 (NTTAA), Public Law 104–113, section 12(d) (15 U.S.C. 272 note). Since tolerances and exemptions that are established on the basis of a petition under FFDCA section 408(d), such as the exemption in this final rule, do not

require the issuance of a proposed rule, the requirements of the Regulatory Flexibility Act (RFA) (5 U.S.C. 601 *et seq.*) do not apply. In addition, the Agency has determined that this action will not have a substantial direct effect on States, on the relationship between the national government and the States, or on the distribution of power and responsibilities among the various levels of government, as specified in Executive Order 13132, entitled *Federalism* (64 FR 43255, August 10, 1999). Executive Order 13132 requires EPA to develop an accountable process to ensure ''meaningful and timely input by State and local officials in the development of regulatory policies that have federalism implications.'' ''Policies that have federalism implications'' is defined in the Executive order to include regulations that have ''substantial direct effects on the States, on the relationship between the national government and the States, or on the distribution of power and responsibilities among the various levels of government.'' This final rule directly regulates growers, food processors, food handlers and food retailers, not States. This action does not alter the relationships or distribution of power and responsibilities established by Congress in the preemption provisions of FFDCA section 408(n)(4). For these same reasons, the Agency has determined that this rule does not have any ''tribal implications'' as described in Executive Order 13175, entitled *Consultation and Coordination with Indian Tribal Governments* (65 FR 67249, November 6, 2000). Executive Order 13175, requires EPA to develop an accountable process to ensure ''meaningful and timely input by tribal officials in the development of regulatory policies that have tribal implications.'' ''Policies that have tribal implications'' is defined in the Executive order to include regulations that have ''substantial direct effects on one or more Indian tribes, on the relationship between the Federal Government and the Indian tribes, or on the distribution of power and responsibilities between the Federal Government and Indian tribes.'' This rule will not have substantial direct effects on tribal governments, on the relationship between the Federal Government and Indian tribes, or on the distribution of power and responsibilities between the Federal Government and Indian tribes, as specified in Executive Order 13175. Thus, Executive Order 13175 does not apply to this rule.

XIII. Submission to Congress and the Comptroller General

The Congressional Review Act, 5 U.S.C. 801 *et seq.*, as added by the Small Business Regulatory Enforcement Fairness Act of 1996, generally provides that before a rule may take effect, the agency promulgating the rule must submit a rule report, which includes a copy of the rule, to each House of the Congress and to the Comptroller General of the United States. EPA will submit a report containing this rule and other required information to the U.S. Senate, the U.S. House of Representatives, and the Comptroller General of the United States prior to publication of this rule in the **Federal Register**. This rule is not a ''major rule'' as defined by 5 U.S.C. 804(2).

List of Subjects in 40 CFR Part 180

Environmental protection, Administrative practice and procedure, Agricultural commodities, Pesticides and pests, Reporting and recordkeeping requirements.

Dated: July 25, 2002.

Peter Caulkins,

Acting Director, Registration Division, Office of Pesticide Programs.

Therefore, 40 CFR chapter I is amended as follows:

PART 180—[AMENDED]

1. The authority citation for part 180 continues to read as follows:

Authority: 21 U.S.C. 321(q), 346(a) and 371.

2. In § 180.1001 the tables in paragraphs (c) and (e) are amended by adding alphabetically, the following inert ingredient to read as follows:

§ 180.1001 Exemptions from the requirement of a tolerance.

* * * * *

(c) * * *

Inert ingredients	Limits	Uses
*	* * * *	
2-Propenoic acid, 2-methyl-, polymer with ethyl 2-propenoate and methyl 2-methyl-2-propenoate, ammonium salt (CAS Registration No. 55989–05–4), minimum number average molecular weight (in amu), 18,900.	.....	Encapsulating agent, dispensers, resins, fibers and beads
*	* * * *	

* * * * *

(e) * * *

Inert ingredients	Limits	Uses
*	* * * *	
2-Propenoic acid, 2-methyl-, polymer with ethyl 2-propenoate and methyl 2-methyl-2-propenoate, ammonium salt (CAS Registration No. 55989–05–4), minimum number average molecular weight (in amu), 18,900.	.....	Encapsulating agent,dispensers, resins, fibers and beads
*	* * * *	

[FR Doc. 02–19806 Filed 8–6–02; 8:45 am]
BILLING CODE 6560–50–S

ENVIRONMENTAL PROTECTION AGENCY

40 CFR Part 180

[OPP–2002–0149; FRL–7192–5]

Dichlormid; Extension of Time-Limited Pesticide Tolerance

AGENCY: Environmental Protection Agency (EPA).

ACTION: Final rule.

SUMMARY: This regulation re-establishes time-limited tolerances for residues of the inert ingredient (herbicide safener) dichlormid (*N,N*-diallyl dichloroacetamide) in or on corn commodities (forage, grain, stover) at 0.05 ppm. Dow AgroSciences requested this tolerance under the Federal Food, Drug, and Cosmetic Act, as amended by the Food Quality Protection Act of 1996. The tolerances expired on March 27, 2002. This rule will re-establish these tolerances and extend them to December 31, 2005.

DATES: This regulation is effective August 7, 2002. Objections and requests for hearings, identified by docket ID number OPP–2002–0149, must be received on or before October 7, 2002.

ADDRESSES: Written objections and hearing requests may be submitted by mail, in person, or by courier. Please follow the detailed instructions for each method as provided in Unit VI. of the **SUPPLEMENTARY INFORMATION**. To ensure proper receipt by EPA, your objections and hearing requests must identify docket ID number OPP–2002–0149 in the subject line on the first page of your response.

FOR FURTHER INFORMATION CONTACT: By mail: Treva C. Alston, Registration Division 7505C, Office of Pesticide Programs, Environmental Protection Agency, 1200 Pennsylvania Ave., NW., Washington, DC 20460; telephone number: (703) 308–8373; e-mail address: alston.treva@epa.gov.

SUPPLEMENTARY INFORMATION:

I. General Information

A. Does this Action Apply to Me?

You may be affected by this action if you are an agricultural producer, food manufacturer, or pesticide manufacturer. Potentially affected categories and entities may include, but are not limited to:

Categories	NAICS	Examples of Potentially Affected Entities
Industry	111	Crop production
	112	Animal production
	311	Food manufacturing
	32532	Pesticide manufacturing

This listing is not intended to be exhaustive, but rather provides a guide for readers regarding entities likely to be affected by this action. Other types of entities not listed in the table could also be affected. The North American Industrial Classification System (NAICS) codes have been provided to assist you and others in determining whether or not this action might apply to certain entities. If you have questions regarding the applicability of this action to a particular entity, consult the person listed under **FOR FURTHER INFORMATION CONTACT**.

B. How Can I Get Additional Information, Including Copies of this Document and Other Related Documents?

1. *Electronically.* You may obtain electronic copies of this document, and certain other related documents that might be available electronically, from the EPA Internet Home Page at http://www.epa.gov/. To access this document, on the Home Page select ''Laws and Regulations,'' ''Regulations and Proposed Rules,'' and then look up the entry for this document under the ''**Federal Register**—Environmental Documents.'' You can also go directly to the **Federal Register** listings at http://www.epa.gov/fedrgstr/. A frequently updated electronic version of 40 CFR part 180 is available at http://www.access.gpo.gov/nara/cfr/cfrhtml_00/Title_40/40cfr180_00.html, a beta site currently under development. To access the OPPTS Harmonized Guidelines referenced in this document, go directly to the guidelines at http://www.epa.gov/opptsfrs/home/guidelin.htm.

2. *In person.* The Agency has established an official record for this action under docket ID number OPP–2002–0149. The official record consists of the documents specifically referenced in this action, and other information related to this action, including any information claimed as Confidential Business Information (CBI). This official record includes the documents that are physically located in the docket, as well as the documents that are referenced in those documents. The public version of the official record does not include any information claimed as CBI. The public version of the official record, which includes printed, paper versions of any electronic comments submitted during an applicable comment period is available for inspection in the Public Information and Records Integrity Branch (PIRIB), Rm. 119, Crystal Mall #2, 1921 Jefferson Davis Hwy., Arlington, VA, from 8:30 a.m. to 4 p.m., Monday through Friday, excluding legal holidays. The PIRIB telephone number is (703) 305–5805.

II. Background and Statutory Findings

In the **Federal Register** of September 16, 1998 (63 FR 49568) (FRL–6025–8), EPA issued a notice pursuant to section 408 of the Federal Food, Drug, and Cosmetic Act (FFDCA), 21 U.S.C. 346a, as amended by the Food Quality Protection Act of 1996 (FQPA) (Public Law 104–170), announcing the filing of a pesticide petition (PP 6F03344) by Zeneca Ag Products, 1800 Concord Pike, Wilmington, DE. This notice included a summary of the petition prepared by Zeneca Ag Products, the petitioner at that time. There were no comments received in response to the notice of filing. The Agency published a final rule in the **Federal Register** on March 27, 2000 (65 FR 16143)(FRL–6498–7) establishing time-limited tolerances, expiring on March 27, 2002. In correspondence to the Agency, Zeneca requested additional time past March 2002 for data generation. On November 9, 2000, Zeneca Ag Products sold certain parts of its business to Dow AgroSciences. In connection with the sale, Zeneca Ag Products transferred all rights, title, and interest in dichlormid to Dow AgroSciences. The new petitioner, Dow AgroSciences, has similarly requested additional time for data generation. In the **Federal Register** of May 22, 2002 (67 FR 35996) (FRL–6836–4), EPA issued a notice pursuant to section 408 of the FFDCA 21 U.S.C. 346a, as amended by the FQPA of 1996 (Public Law 104–170) announcing the filing of PP 6F03344 by Dow AgroSciences, 9330 Zionsville Road, Indianapolis, IN 46268. This notice included a summary of the petition prepared by Dow Agrosciences. There were no comments received in response to the notice of filing.

The petition requested that 40 CFR 180.469 be amended by establishing tolerances for residues of the herbicide safener dichlormid, in or on field corn grain, field corn forage, and field corn fodder at 0.05 part per million (ppm).

Section 408(b)(2)(A)(i) of the FFDCA allows EPA to establish a tolerance (the legal limit for a pesticide chemical residue in or on a food) only if EPA determines that the tolerance is ''safe.'' Section 408(b)(2)(A)(ii) defines ''safe'' to

mean that ''there is a reasonable certainty that no harm will result from aggregate exposure to the pesticide chemical residue, including all anticipated dietary exposures and all other exposures for which there is reliable information.'' This includes exposure through drinking water and in residential settings, but does not include occupational exposure. Section 408(b)(2)(C) requires EPA to give special consideration to exposure of infants and children to the pesticide chemical residue in establishing a tolerance and to ''ensure that there is a reasonable certainty that no harm will result to infants and children from aggregate exposure to the pesticide chemical residue....''

EPA performs a number of analyses to determine the risks from aggregate exposure to pesticide residues. For further discussion of the regulatory requirements of section 408 and a complete description of the risk assessment process, see the final rule on Bifenthrin Pesticide Tolerances (62 FR 62961, November 26, 1997) (FRL–5754–7).

III. Aggregate Risk Assessment and Determination of Safety

Consistent with section 408(b)(2)(D), EPA has reviewed the available scientific data and other relevant information in support of this action. EPA has sufficient data to assess the hazards of and to make a determination on aggregate exposure, consistent with section 408(b)(2), for tolerances for residues of dichlormid on field corn grain; field corn forage; and field corn fodder, (now corn, field, grain; corn, field, forage; and corn, field, stover) at 0.05 ppm. EPA's assessment of exposures and risks associated with establishing the tolerances follows.

The Agency prepared a risk assessment which was used as the basis for establishing time-limited tolerances in residues of corn, field, grain; corn, field, forage; and corn, field, stover. A final rule for these tolerances was published in the **Federal Register** of March 27, 2000. Based on the risk assessment, EPA concluded at that time that all of the risks are below the Agency's level of concern and there is a reasonable certainty that no harm will result to the general population, and to infants and children from aggregate exposure to residues of dichlormid on corn commodities.

For a complete description of the toxicological profile and endpoints, the uncertainty factors, the exposure assessment which included dietary exposure for both food and drinking water, the safety factor for infants and children, and aggregate risk for dichlormid, see the final rule of March 27, 2000.

The final rule of March 27, 2002, discussed data gaps which needed to be addressed before permanent tolerances could be established. Data generation is underway. According to a schedule provided by Dow AgroSciences, the following studies have been completed:

1. Chronic Feeding Study-Dog
2. 2-Generation Reproduction Study-Rat
3. General Metabolism
4. Acute Neurotoxicity
5. Subchronic Neurotoxicity
6. Plant Metabolism
7. Animal Metabolism

Studies remaining to be completed are: Crop Field Trials and Rotational Crop (Confined). Upon completion of all studies, Dow Agrosciences will submit them to the Agency. The last scheduled completion date is June 2003 for the Rotational Crop (Confined) Study. Upon receipt, the Agency will review and evaluate these studies, and prepare a new risk assessment. The Agency believes that this review and evaluation, as well as the preparation of a new risk assessment will be completed by December 31, 2005. Until that time, this final rule establishes the time-limited tolerances expiring December 31, 2005 in order to allow for the completion and then subsequent Agency review and evaluation of these studies.

There are a large number of studies that remain outstanding. However, the data gaps are not as extensive as it would seem. The nature of the residue in corn was previously found to be understood based on the published metabolism studies for a structurally similar chemical. Since the Agency's understanding of the plant metabolism of dichlormid was derived from an extrapolation from surrogate data, a plant metabolism study in accordance with OPPTS guidelines 860.1300 using dichlormid is required.

For the crop field trials, both pre-and post-emergent data using dichlormid have been provided. More field trials are to be submitted in order to fulfill the guideline requirements.

To account for the incomplete toxicological database, the Agency retained an additional 10X safety factor for infants and children as to acute risk and an additional 30X safety factor as to chronic risk. Once the data gaps have been fulfilled, retention of these safety factors will be evaluated.

IV. Other Considerations

A. Analytical Enforcement Methodology

Adequate enforcement methodology (gas chromotography) is available to enforce the tolerance expression. The method may be requested from: Calvin Furlow, PIRIB, IRSD (7502C), Office of Pesticide Programs, Environmental Protection Agency, 1200 Pennsylvania Ave., NW., Washington, DC 20460; telephone number: (703) 305–5229; e-mail address: furlow.calvin@epa.gov.

B. International Residue Limits

There is neither a Codex proposal, nor Canadian or Mexican limits for residues of dichlormid in corn commodities.

V. Conclusion

Therefore, the time-limited tolerances are re-established for residues of the inert ingredient herbicide safener, dichlormid, *N,N*-diallyldichloracetamide in corn, field, forage; corn, field, grain; corn, field, stover; corn, pop, grain; and corn, pop, stover at a tolerance level of 0.05 ppm. These tolerances will expire and be revoked on December 31, 2005. These tolerances are being established on a time-limited basis due to an incomplete datebase. The following toxicological data gaps (OPPTS Harmonized Test Guideline) have been identified:

- Chronic Feeding Study in Dogs, Test Guidelines 870.4100.
- 2-Generation Reporductive Study in Rats, Test Guideline 870.3900.
- General Metabolism Study, Test Guideline 870.6200.
- Subchronic Neurotoxicity Study, Test Guideline 870.6200.

The following product and residue chemistry data were also identified:

- Product Chemistry Data-color, Test Guideline 830.6302; physical state, Test Guideline 830.6303; odor, 830.6304; melting point, Test Guideline 830.7200; boiling point, Test Guideline 830.7220; water solubility, Test Guideline 830.7840; and stability, Test Gudieline 830.6313.
- Plant Metabolism Study, Test Guideline 860.1300.
- Animal Metablism Studies, Test Guideline 860.1300.
- Crop Field Trials, 860.1500.
- Rotational Crop Study, Test Guideline 860.1850 (Confined Study.

The toxicological product chemistry and residue chemistry data gaps as identified must be addressed before a permanent tolerance can be established.

VI. Objections and Hearing Requests

Under section 408(g) of the FFDCA, as amended by the FQPA, any person may file an objection to any aspect of this regulation and may also request a hearing on those objections. The EPA procedural regulations which govern the submission of objections and requests for hearings appear in 40 CFR part 178.

Although the procedures in those regulations require some modification to reflect the amendments made to the FFDCA by the FQPA of 1996, EPA will continue to use those procedures, with appropriate adjustments, until the necessary modifications can be made. The new section 408(g) provides essentially the same process for persons to ''object'' to a regulation for an exemption from the requirement of a tolerance issued by EPA under new section 408(d), as was provided in the old FFDCA sections 408 and 409. However, the period for filing objections is now 60 days, rather than 30 days.

A. What Do I Need to Do to File an Objection or Request a Hearing?

You must file your objection or request a hearing on this regulation in accordance with the instructions provided in this unit and in 40 CFR part 178. To ensure proper receipt by EPA, you must identify docket ID number OPP–2002–0149 in the subject line on the first page of your submission. All requests must be in writing, and must be mailed or delivered to the Hearing Clerk on or before October 7, 2002.

1. *Filing the request*. Your objection must specify the specific provisions in the regulation that you object to, and the grounds for the objections (40 CFR 178.25). If a hearing is requested, the objections must include a statement of the factual issues(s) on which a hearing is requested, the requestor's contentions on such issues, and a summary of any evidence relied upon by the objector (40 CFR 178.27). Information submitted in connection with an objection or hearing request may be claimed confidential by marking any part or all of that information as CBI. Information so marked will not be disclosed except in accordance with procedures set forth in 40 CFR part 2. A copy of the information that does not contain CBI must be submitted for inclusion in the public record. Information not marked confidential may be disclosed publicly by EPA without prior notice.

Mail your written request to: Office of the Hearing Clerk (1900), Environmental Protection Agency, 1200 Pennsylvania Ave., NW., Washington, DC 20460. You may also deliver your request to the Office of the Hearing Clerk in Rm. C400, Waterside Mall, 401 M St., SW., Washington, DC 20460. The Office of the Hearing Clerk is open from 8 a.m. to 4 p.m., Monday through Friday, excluding legal holidays. The telephone number for the Office of the Hearing Clerk is (202) 260–4865.

2. *Tolerance fee payment*. If you file an objection or request a hearing, you must also pay the fee prescribed by 40 CFR 180.33(i) or request a waiver of that fee pursuant to 40 CFR 180.33(m). You must mail the fee to: EPA Headquarters Accounting Operations Branch, Office of Pesticide Programs, P.O. Box 360277M, Pittsburgh, PA 15251. Please identify the fee submission by labeling it ''Tolerance Petition Fees.''

EPA is authorized to waive any fee requirement ''when in the judgement of the Administrator such a waiver or refund is equitable and not contrary to the purpose of this subsection.'' For additional information regarding the waiver of these fees, you may contact James Tompkins by phone at (703) 305–5697, by e-mail at tompkins.jim@epa.gov, or by mailing a request for information to Mr. Tompkins at Registration Division (7505C), Office of Pesticide Programs, Environmental Protection Agency, 1200 Pennsylvania Ave., NW., Washington, DC 20460.

If you would like to request a waiver of the tolerance objection fees, you must mail your request for such a waiver to: James Hollins, Information Resources and Services Division (7502C), Office of Pesticide Programs, Environmental Protection Agency, 1200 Pennsylvania Ave., NW., Washington, DC 20460.

3. *Copies for the Docket*. In addition to filing an objection or hearing request with the Hearing Clerk as described in Unit VI.A., you should also send a copy of your request to the PIRIB for its inclusion in the official record that is described in Unit I.B.2. Mail your copies, identified by docket ID number OPP–2002–0149, to: Public Information and Records Integrity Branch, Information Resources and Services Division (7502C), Office of Pesticide Programs, Environmental Protection Agency, 1200 Pennsylvania Ave., NW., Washington, DC 20460. In person or by courier, bring a copy to the location of the PIRIB described in Unit I.B.2. You may also send an electronic copy of your request via e-mail to: opp-docket@epa.gov. Please use an ASCII file format and avoid the use of special characters and any form of encryption. Copies of electronic objections and hearing requests will also be accepted on disks in WordPerfect 6.1/8.0 or ASCII file format. Do not include any CBI in your electronic copy. You may also submit an electronic copy of your request at many Federal Depository Libraries.

B. When Will the Agency Grant a Request for a Hearing?

A request for a hearing will be granted if the Administrator determines that the material submitted shows the following: There is a genuine and substantial issue of fact; there is a reasonable possibility that available evidence identified by the requestor would, if established resolve one or more of such issues in favor of the requestor, taking into account uncontested claims or facts to the contrary; and resolution of the factual issues(s) in the manner sought by the requestor would be adequate to justify the action requested (40 CFR 178.32).

VII. Regulatory Assessment Requirements

This final rule establishes a tolerance under FFDCA section 408(d) in response to a petition submitted to the Agency. The Office of Management and Budget (OMB) has exempted these types of actions from review under Executive Order 12866, entitled *Regulatory Planning and Review* (58 FR 51735, October 4, 1993). Because this rule has been exempted from review under Executive Order 12866 due to its lack of significance, this rule is not subject to Executive Order 13211, *Actions Concerning Regulations That Significantly Affect Energy Supply, Distribution, or Use* (66 FR 28355, May 22, 2001). This final rule does not contain any information collections subject to OMB approval under the Paperwork Reduction Act (PRA), 44 U.S.C. 3501 *et seq.*, or impose any enforceable duty or contain any unfunded mandate as described under Title II of the Unfunded Mandates Reform Act of 1995 (UMRA) (Public Law 104–4). Nor does it require any special considerations under Executive Order 12898, entitled *Federal Actions to Address Environmental Justice in Minority Populations and Low-Income Populations* (59 FR 7629, February 16, 1994); or OMB review or any Agency action under Executive Order 13045, entitled *Protection of Children from Environmental Health Risks and Safety Risks* (62 FR 19885, April 23, 1997). This action does not involve any technical standards that would require Agency consideration of voluntary consensus standards pursuant to section 12(d) of the National Technology Transfer and Advancement Act of 1995 (NTTAA), Public Law 104–113, section 12(d) (15 U.S.C. 272 note). Since tolerances and exemptions that are established on the basis of a petition under FFDCA section 408(d), such as the tolerance in this final rule, do not require the issuance of a proposed rule, the requirements of the Regulatory Flexibility Act (RFA) (5 U.S.C. 601 *et seq.*) do not apply. In addition, the Agency has determined that this action will not have a substantial direct effect on States, on the relationship between the national government and the States, or on the distribution of power and

responsibilities among the various levels of government, as specified in Executive Order 13132, entitled *Federalism*(64 FR 43255, August 10, 1999). Executive Order 13132 requires EPA to develop an accountable process to ensure ''meaningful and timely input by State and local officials in the development of regulatory policies that have federalism implications.''" Policies that have federalism implications'' is defined in the Executive order to include regulations that have" substantial direct effects on the States, on the relationship between the national government and the States, or on the distribution of power and responsibilities among the various levels of government.'' This final rule directly regulates growers, food processors, food handlers and food retailers, not States. This action does not alter the relationships or distribution of power and responsibilities established by Congress in the preemption provisions of FFDCA section 408(n)(4). For these same reasons, the Agency has determined that this rule does not have any ''tribal implications'' as described in Executive Order 13175, entitled *Consultation and Coordination with Indian Tribal Governments* (65 FR 67249, November 6, 2000). Executive Order 13175, requires EPA to develop an accountable process to ensure ''meaningful and timely input by tribal officials in the development of regulatory policies that have tribal implications.'' ''Policies that have tribal implications'' is defined in the Executive order to include regulations that have ''substantial direct effects on one or more Indian tribes, on the relationship between the Federal Government and the Indian tribes, or on the distribution of power and responsibilities between the Federal Government and Indian tribes.'' This rule will not have substantial direct effects on tribal governments, on the relationship between the Federal Government and Indian tribes, or on the distribution of power and responsibilities between the Federal Government and Indian tribes, as specified in Executive Order 13175. Thus, Executive Order 13175 does not apply to this rule.

VIII. Submission to Congress and the Comptroller General

The Congressional Review Act, 5 U.S.C. 801*et seq.*, as added by the Small Business Regulatory Enforcement Fairness Act of 1996, generally provides that before a rule may take effect, the agency promulgating the rule must submit a rule report, which includes a copy of the rule, to each House of the Congress and to the Comptroller General of the United States. EPA will submit a report containing this rule and other required information to the U.S. Senate, the U.S. House of Representatives, and the Comptroller General of the United States prior to publication of this final rule in the **Federal Register**. This final rule is not a ''major rule'' as defined by 5 U.S.C. 804(2).

List of Subjects in 40 CFR Part 180

Environmental protection, Administrative practice and procedure, Agricultural commodities, Pesticides and pests, Reporting and recordkeeping requirements.

Dated: July 31, 2002.

Peter Caulkins,

Acting Director, Registration Division, Office of Pesticide Programs.

Therefore, 40 CFR chapter I is amended as follows:

PART 180—[AMENDED]

1. The authority citation for part 180 continues to read as follows:

Authority: 21 U.S.C. 321(q), 346(a) and 371.

2. Section 180.469 is amended by revising the table in paragraph (a) to read as follows:

§ 180.469 N,N-diallyl dichloroacetamide; tolerances for residues.

(a) * * *

Commodity	Parts per million	Expiration/ Revocation Date
Corn, field, forage	0.05	12/31/05
Corn, field, grain	0.05	12/31/05
Corn, field, stover	0.05	12/31/05
Corn, pop, grain	0.05	12/31/05
Corn, pop, stover	0.05	12/31/05

* * * * *

[FR Doc. 02–19801 Filed 8–6–02; 8:45am]

BILLING CODE 6560–50–S

FEDERAL COMMUNICATIONS COMMISSION

47 CFR Part 25

[IB Docket 96–132; FCC 02–24]

Upper and Lower L-Band

AGENCY: Federal Communications Commission.

ACTION: Final rule.

SUMMARY: This document establishes licensing policies governing mobile-satellite service (''MSS'') in certain portions of the L-band. It assigns lower L-band frequencies to Motient Services, Inc. (''Motient'') in lieu of upper L-band frequencies that have been assigned to Motient, and that the United States has been unable to coordinate internationally for use by a U.S. licensee. Any coordinated lower L-band spectrum not required to secure Motient an aggregate of 20 megahertz of L-band spectrum will be made available for other MSS applicants that may wish to apply for assignment of the frequencies. This document also adopts and incorporates into part 25 of the Commission's service rules specific operational parameters and technical requirements to ensure that the integrity of maritime distress and safety communications service will not be compromised by MSS operation in the lower L-band.

DATES: Effective September 6, 2002.

FOR FURTHER INFORMATION CONTACT: Terrence E. Reideler, Attorney Advisor, Satellite Division, International Bureau at 202–418–2165.

SUPPLEMENTARY INFORMATION: This is a summary of the Commission's Report and Order (R&O) in IB Docket No. 96–132, FCC 02–24, adopted January 28, 2002 and released February 7, 2002. The complete text of this R&O is available for inspection and copying during normal business hours in the FCC Reference Information Center, Portals II, 445 12th Street, SW, Room CY–A257, Washington, DC 20554. This document may also be purchased from the Commission's duplicating contractor, Qualex International, Portals II, 445 12th Street, SW, Room CY–B402, Washington, DC 20554, telephone (202) 863–2893, facsimile (202) 863–2898 or via email *qualexint@aol.com*. It is also available on the Commission's website at *http://www.fcc.gov.*

1. In the Notice of Proposed Rulemaking (NPRM), FCC 96–259 published at 61 FR 40772, August 6, 1996 preceding this R&O, the Commission asked for comment on the possibility of assigning up to a maximum of 28 megahertz of internationally coordinated upper and lower L-band spectrum to Motient. Additionally, the Commission asked for comment on whether any spectrum coordinated for U.S. use above 28 megahertz should be made available to future MSS applicants. The Commission also proposed a series of technical and operational standards designed to prevent new MSS operations from interfering with maritime distress and safety communications in the lower L-band.

2. To support providing Motient with spectrum in the lower L-band, the Commission explained that Motient was originally authorized to use 28 megahertz of spectrum in the upper L-band for MSS service. In the original Licensing Order the Commission required 12 applicants to form a single MSS operating consortium. The Commission based this requirement on the twelve applicants before it and the Commission's finding that there was only sufficient spectrum available to support one system. Subsequently, however, during on-going yearly international coordination meetings, the Commission has been unable to secure sufficient spectrum to support Motient's authorized system in the upper L-band. In the NPRM, the Commission also noted that the on-going international coordination in the lower L-band was similarly difficult.

3. Based on the inability to coordinate sufficient spectrum, the Commission tentatively concluded that Motient should be authorized to operate across the upper and lower L-band frequencies in order to support its authorized MSS system. Thus, it proposed that Motient be assigned up to 28 megahertz from the entire L-band. That amount of spectrum represented the optimum system that Motient hoped to operate.

4. In 1985, the Commission had estimated that an MSS system would likely require a minimum of 20 megahertz of spectrum to be viable. In the NPRM the Commission asked whether its estimate was still valid. The Commission tentatively concluded that there would be sufficient L-band spectrum available to support only one U.S. MSS system. Accordingly, the Commission proposed to assign the lower L-band frequencies it was able to coordinate for use by U.S. licensed space stations to Motient by modifying its existing license, pursuant to section 316 of the Communications Act (''the Act''), enabling Motient to use these frequencies in lieu of those from the upper portion of the L-band that the U.S. was unable to coordinate for domestic use. The Commission also tentatively concluded that reassignment is within the authority invested in the Commission by sections 303 and 4(i) of the Act to adopt regulations to carry out its spectrum management obligations.

5. To address issues pertaining to maritime distress and safety in the lower L-band, the Commission noted that the L-band is allocated for generic MSS. That is, aeronautical mobile-satellite service (''AMSS''), land mobile-satellite service (''LMSS''), and maritime mobile-satellite service (''MMSS'') are allowed to share portions of the L-band for non-safety related communication on an equal basis. Operation within the Global Maritime Distress and Safety System (''GMDSS''), however, has priority access with real-time preemptive capability over all other mobile-satellite communications operating in the 1530–1544 MHz and the 1626.5–1645.5 MHz portions of the lower L-band. Therefore, to protect and maintain the integrity of safety and distress maritime communications, both internationally and domestically, the Commission proposed to establish and codify priority access and preemption standards and policies for MSS systems operating in these portions of the lower L-band. The Commission also proposed to allow mobile earth terminal data message transmissions to be half-duplex, rather than requiring full-duplex, and sought comment as to the maximum amount of time that transmissions should be permitted. The Commission tentatively concluded that adopting a maximum time limit on data message transmissions and proposed priority access and real-time preemption standards for distress and safety communication would provide sufficient priority to comply with the requirements of U.S. Footnote 315 of the U.S. Table of Frequency Allocations.

6. Nine parties filed initial comments in response to the NPRM. Five of these parties also filed reply comments. Nearly all of the comments address the proposals related to the assignment of lower L-band frequencies to Motient. Only Motient and the U.S. Coast Guard commented on the proposals concerning maritime safety and distress priority and preemptive access.

7. One of the concerns giving rise to the NPRM was that international coordination difficulties precluded securing sufficient spectrum in the upper L-band to support Motient's authorized system. Moreover, at the time of the NPRM, based on on-going international coordination meetings, the Commission believed the likelihood of securing more than 20 megahertz from the entire L-band (both upper and lower) for U.S. use was remote. Two parties, Celsat and LQL have taken issue with this assumption, contending that subsequent events have altered the L-band assignment process. They point out that shortly after the release of the NPRM the Commission issued a news release announcing that Inmarsat, Canada, Mexico, the Russian Federation, and the United States, the operators currently coordinating spectrum for a variety of MSS systems in the vicinity of North America, had signed a Memorandum of Understanding (''MOU'') in Mexico City. The news release stated, in part, that the MOU specified that ''[s]pectrum allocations to individual operators will be reviewed annually on the basis of actual usage and short-term projections of future need.'' LQL interprets the news release as providing the United States with what LQL characterizes as a ''dynamic allocation'' across the upper and lower L-band as determined by actual traffic.

8. We believe that the coordination process established in Mexico City has worked well to ensure equitable sharing of the L-band spectrum. It has not, however, altered the fact that the L-band is in high demand. All five MSS operators have claimed to need more spectrum than is currently assigned to them and some seek amounts that exceed availability. Consequently, the international coordination difficulties remain in negotiating sufficient spectrum to enable Motient to establish and operate a viable MSS system.

9. In the NPRM, the Commission gave three bases to support its proposal to modify Motient's license to allow it to operate over frequencies in the lower and upper L-band. First, MSS is well suited to serve areas that are too remote or sparsely populated to receive service from terrestrial land mobile systems. Second, since launching its first satellite in 1995, Motient was in the best position to provide MSS in the U.S. in the shortest amount of time. Third, and most importantly, a license issued by the Commission must include a reasonable expectation that spectrum will be available to enable the licensee to implement the system that it has proposed and has been authorized to operate. Each of these justifications has generated comments.

10. No commenter disagreed with the Commission's assertion that MSS systems are particularly well suited for providing mobile communication services to areas that are not being adequately served by terrestrial radio facilities. Commenters left undisputed the fact that despite the growth of terrestrial radio services such as cellular radio and Personal Communications Services (''PCS''), large areas of the nation remain without basic telecommunications services. Commenters agree that MSS provides the technical capability to meet the needs of people in remote areas for public safety, business and personal communications and that MSS operations should be supported in the L-band.

11. In the NPRM, the Commission concluded that Motient was best suited to provide expeditious service to the public because one of its three

authorized satellites is in operation. Our experience has been that it normally takes licensees three years to construct, launch and begin operations of a geostationary satellite. Motient concurs with this assessment. Motorola/Iridium disagrees. Motorola/Iridium contends that Motient is the only operational MSS system because the Commission has refused to accept other MSS applications. Motorola/Iridium submits that this action has been prejudicial to it and to other potential MSS applicants. What Motorola/Iridium fails to address in its argument, however, is that the Commission chose not to invite a new processing round because there was not sufficient spectrum to accommodate the existing licensed systems. Moreover, in this particular coordination process, where spectrum allocation is based on actual usage and short-term projections of future need, an operating system is essential. Without such a system, the available spectrum would have been allocated to non-U.S. systems and none would be available. Thus, under these circumstances, Motorola/Iridium's argument is not persuasive.

12. LQL, on the other hand, contends that the Commission has not adequately established a connection between expediting service and adding frequencies to Motient's system. It points out that Motient has failed to meet the deadlines for launching its other two satellites. LQL therefore argues that there are no rational grounds for concluding that Motient would use the additional spectrum that we propose to assign to it before another licensed system could be placed in operation. We disagree. Given that Motient has proposed an MSS system designed to use 28 megahertz of spectrum, requiring it to fully construct this system when the spectrum for which it was designed is not available would not advance the public interest. Moreover, given the lack of available spectrum, there is no indication that the expense of constructing, launching and operating these satellites would improve the services that Motient is currently providing. And, as pointed out above, waiting for another system to be placed in operation would have resulted in no frequencies being available. Thus, LQL's comments have not altered our conclusion that Motient is best suited to serve the U.S. MSS market using this portion of the L-band.

13. The Commission's proposal to allow Motient to have initial access to the lower L-band spectrum was based on our conclusion that, unless modified for overriding public interest reasons, licensees should be entitled to a reasonable expectation that adequate spectrum will be made available to support their authorized systems. Motient supports this determination. Other commenters, however, argue that satellite authorizations are conditioned upon, and subject to, international coordination. These commenters argue that there is no basis for providing Motient spectrum outside of what it has been able to coordinate though the normal coordination process in the upper L-band.

14. The Commission also stated in the NPRM that the Commission can, and shall, take reasonable and appropriate steps to ensure that licensees have a fair opportunity to compete. The commenters all agreed that the Commission is entrusted with this responsibility. In order for an MSS licensee to compete, it must have sufficient spectrum to provide acceptable service at a reasonable price. Previously, the Commission estimated that a minimum of 20 megahertz of L-band spectrum is necessary for an economically viable domestic MSS system in this frequency band. The NPRM sought comment on whether this amount is still needed to enable an MSS licensee to establish and operate a competitive system.

15. Commenters contend that based on the development of satellite and mobile radio technology, it is now possible to operate a profitable MSS system using less than 20 megahertz of spectrum. Commenters state that new MSS systems using state-of-the-art technology are dramatically more efficient than Motient's system and provide a higher level of satellite services, including service to hand-held mobile terminals. RSC, for instance, points out that there are three competing geostationary L-band systems under construction in Asia, and two other systems that are planned for service in the Middle East and nearby regions. In this regard, Lockheed Martin indicates that it is the prime contractor for the Asia Cellular Satellite (''ACeS'') system, which is one of the systems identified by RSC. ACeS is a satellite-based, hand-held, digital mobile telecommunications system that is designed to provide service to subscribers in the Asia-Pacific region. Lockheed Martin maintains that use of the latest technological developments in its design of the ACeS satellite and associated ground equipment for the ACeS system enables it to achieve new levels of spectral efficiency and circuit capability. In fact, Lockheed Martin professes that the ACeS system may be up to 20 times more spectrum efficient than Motient's first generation MSS system because of its extensive reliance on frequency reuse. Accordingly, Lockheed Martin declares that as little as five megahertz of spectrum can now simultaneously support up to 16,000 MSS simplex circuits and ten megahertz of spectrum can support the same number of full duplex circuits. Both Motorola/Iridium and RSC support Lockheed Martin's assessments. Motient concedes that a multiple-beam satellite, such as the one Lockheed Martin has designed for the ACeS MSS system, would probably be three times more spectrum efficient than Motient's existing satellite, and that efficiency gains that the ACeS system achieves through the employment of newer voice coding and compression algorithms (''vocoders'') are likely to result in a 20 percent reduction in Motient's spectrum usage.

16. We recognize that technical strides have been made since 1987, when MSS was first authorized in the L-band. The Commission then determined that there was insufficient spectrum to support the applications it had on file for this service. With this in mind, the Commission required the applicants to form a consortium. The consortium was the only licensee in the upper L-band. In the 1996 NPRM, the Commission concluded that Motient would need up to the first 28 megahertz of available L-band spectrum to operate an optimum MSS system. It also concluded that an economically viable MSS system designed to the technical specifications on file must have a minimum of 20 megahertz of spectrum. Based on the minimum spectrum estimation and ongoing international coordination meetings, the Commission concluded that opening the lower L-band for competing applications was unlikely. At the time the NPRM was adopted, the Commission did not believe that there would be sufficient spectrum to accommodate more than Motient's system in the entire L-band. Thus, it tentatively concluded that in the lower L-band Motient should be authorized to use the balance of the available 28 megahertz for which it is authorized.

Legal Authority

17. Section 316 of the Act provides the Commission with authority to modify an existing license when necessary. LQL challenges the Commission's authority to use Section 316 of the Act to modify Motient's current license to enable it to use lower L-band frequencies due to our unsuccessful attempts to coordinate sufficient upper L-band spectrum to support the system the Commission authorized Motient to operate. According to LQL, Section 316 does not

apply to Motient's situation. LQL claims that the application of Section 316 is limited to those cases in which the Commission's action has the effect of modifying an ''unconditional right'' in a license. According to LQL, that has not been done in the case before us. LQL argues that Motient's authorization does not encompass an unconditional right to operate in the lower L-band. LQL concludes that since we are not modifying Motient's existing license, Section 316 is not applicable. We disagree. As Motient correctly points out, we are modifying its assignment of specific frequencies in the upper L-band.

18. The language of section 316 is clear and unequivocal: ''[A]ny station license * * * may be modified by the Commission * * * if in the judgment of the Commission such action will promote the public interest, convenience, and necessity.'' The original license authorized Motient to use the upper L-band frequencies. Now, because many of these frequencies are not available because of international coordination, we intend to modify Motient's license. If and when the spectrum becomes available, we will realign frequencies that are unavailable in the upper L-band and include frequencies in the lower L-band, up to the 20 megahertz that we intend to authorize to Motient. This action allows Motient to aggregate up to 20 megahertz of L-band spectrum in which to operate its current MSS system and promotes the public interest, convenience and necessity by providing Motient sufficient spectrum to provide service to many of the nation's rual and remote areas.

19. Because we are adopting the NPRM proposal to modify Motient's license pursuant to section 316 of the Act, we will dismiss its 1993 application in which Motient requests authority to use spectrum in the lower L-band. Accordingly, the concerns regarding the acceptance of Motient's 1993 application are now moot. New applications for L-band spectrum, however, may be filed once Motient has acquired the 20 megahertz that we are now authorizing.

20. We continue to believe, therefore, that the Commission has ample authority to modify Motient's license as discussed above and that this action best serves the public interest. MSS provides service to areas in the United States that would otherwise go unserved. Motient is the U.S. company in the best position in the L-band to provide this service and it is entitled to a reasonable expectation that enough spectrum will be coordinated to support its authorized system. Commenters have not persuasively demonstrated that a different outcome is warranted. Thus Motient will be granted use of the first 20 megahertz of internationally coordinated spectrum in the L-band.

Priority Access and Preemption

21. Footnote US315 to § 2.106 of the Commission's rules states that lower L-band MSS systems may not interfere with maritime mobile-satellite (MMSS) distress and safety communications that are also operating in these frequencies. Footnote US315 protects MMSS distress and safety communications, such as GMDSS, domestically by providing priority access and real-time preemptive capability for distress and safety communications. To ensure MSS compliance with the provisions of Footnote US315, the Commission proposed establishing priority access and preemption standards and policies for mobile-satellite service in the lower L-band and incorporating these standards into the Commission's rules. The proposed system and terminal requirements are delineated in Appendix B of the NPRM. The Commission sought comment on the proposed standards in Appendix B, and on the maximum number of seconds to which half-duplex data MET transmissions should be limited. The proposed requirements are derived from similar requirements that the Commission adopted in connection with the operation of aeronautical distress and safety-related communication in the upper L-band. These technical requirements were formulated in order to comply with the provisions of Footnote US308 for priority and preemptive access for aeronautical safety communications. The Commission also proposed in the NPRM to continue to allow U.S.-licensed MSS systems to operate half-duplex Inmarsat ''Standard C'' type or technically similar mobile earth terminals (''METs'') in the lower L-band. Additionally, the Commission proposed establishing a time limit for data messages transmitted in half-duplex from METs in order to protect the integrity of maritime safety and distress communications in the lower L-band. At the end of this period, the MES could be commanded to pause by the LES and the higher priority traffic could be placed ahead of any further transmissions. In cases where priority traffic is intended for the MES that is transmitting, it could be commanded to stop transmitting and receive the priority traffic.

22. The Commission stated that the proposal to allow U.S.-licensed MSS systems to operate in half-duplex with appropriate restraints could provide sufficient distress and safety communication priority to comply with the intent of Footnote US315. The NPRM explained that maritime distress and safety services in the lower L-band have been operational for years and are sufficiently dynamic and robust to accommodate the operation of half-duplex METs. In this regard, it also noted that Inmarsat and others operate in half-duplex ''Standard C'' or other technically similar data METs with no apparent harm to maritime safety and distress communications. Motient offers some suggestions regarding the proposed system and terminal requirements specified in Appendix B of the NPRM. Motient maintains that some of the provisions in Appendix B are ambiguous. Its principal concerns are with Requirements Nos. 2 and 8 for MES and Requirement No. 9 for LES. Specifically, Motient argues that these requirements obligate terminals to be capable of being automatically interrupted during a transmission to receive a higher priority incoming call. Motient says that a more reasonable approach to a busy signal will typically be to try again momentarily. It explains that automatic preemption works well in the case of packet data or data message communications systems. In those cases, Motient says, messages or packets from a ship may be queued, either in the MES or in other shipboard communications equipment. It adds that a high priority message or packet could then be placed at the head of the queue, and, if necessary preempt an ongoing outbound transmission. Motient also advises that its data services queue messages for processing, distribution, and transmission, so that those services have the capabilities specified in Appendix B of the NPRM.

23. It is apparent from the U.S. Coast Guard's comments that it believes that the maritime distress and safety services in the lower L-band are not as dynamic and robust as described in the NPRM. The fact that the U.S. Coast Guard alleges that use of half-duplex METs has resulted in significant delays in the communication of maritime safety messages, despite the fact that the number of ship-borne earth station terminals has been relatively small, is of note. Consequently, we are concerned that as more vessels install satellite equipment and begin using their terminals for longer periods the situation will become more severe. Although we do not know exactly how many vessels will ultimately be affected, the U.S. Coast Guard estimates that as

of February 1, 1999, between 35,000 and 50,000 ships engaged in international voyages were required to carry GMDSS equipment. The U.S. Coast Guard also states that there is a fleet of approximately 30,000 American commercial fishermen that carry this equipment. Finally, the U.S. Coast Guard predicts additional demand for maritime distress and safety communications as over one million radio-equipped recreational craft begin to install marine satellite devices.

24. In addition to our concern regarding an increase in maritime distress and safety traffic, we believe it is reasonable to expect that the generic use of mobile terminals by Motient, and possibly additional systems, will increase as well. It is reasonable to assume that as mobile terminal usage increases so will channel congestion and the reliability of maritime distress and safety communications will diminish. Because of the importance of safety-related communications, we will take the U.S. Coast Guard's recommendation and therefore we decline to waive the provisions of Footnote US315 for half-duplex METs in the lower L-band on a permanent basis.

25. Accordingly, until a record on this issue is more fully developed, we decline to adopt a definite time limit for transmissions by half-duplex terminals. Parties may, of course, file a petition for rulemaking to address the imposition of a definite time limit if, and when there is sufficient evidence to demonstrate what the limit should be. Until that time, the Commission and the National Telecommunications and Information Administration (NTIA) will continue to review applications for half-duplex MES terminal operational authority (with requests for waiver of Footnote US315, as appropriate) on a case-by-case basis. NTIA indicated to the Commission, in its case-by-case review of recent applications to operate half-duplex MES terminals, that if a MES terminal is capable of, among other things, ceasing transmissions and inhibiting further transmissions within one second, that terminal would be considered to meet the real time preemption requirements. We anticipate that new licenses to operate half-duplex terminals will be similarly conditioned, or limited by waiver of Footnote US315 as in past practice, to ensure that GMDSS in the frequency band remain protected.

System Design

26. In the NPRM, the Commission specifically sought comment only on the proposed standards in Appendix B and on the maximum number of seconds to which half-duplex data MET transmissions should be limited in order to ensure the integrity of maritime distress and safety communications. Motient, however, has advanced several system design proposals for providing priority and preemptive access for maritime distress and safety communications. We believe that Motient's suggestions are beyond the scope of this proceeding. Matters such as how a licensee designs its system to comport with our rules are properly left to satellite system operators. Therefore, once Motient finalizes its system design, it can seek to amend its construction and operating authority.

Interference

27. Motorola/Iridium raises concerns about interference into its system from out-of-band emissions from Motient METs operating in the lower L-band. In the NPRM, however, the Commission explained that if the lower L-band spectrum coordinated for Motient's operation does not include spectrum at the lower band edge it expects that there will be no adjacent band interference. The Commission also noted that should an interference issue arise, it expects the parties to first attempt to resolve interference issues among themselves. We will address such interference issues only if the parties are unable to reach a solution. Finally, the Commission noted that Inmarsat, Australia, Mexico, Canada, and the Russian Federation are either now or will soon be using terminals having out-of-band emissions similar to the METs operated by Motient. Consequently, the Commission noted that Motorola/Iridium may need to coordinate, worldwide, with all the parties operating at band edge.

Inmarsat Use of Lower L-Band

28. The Commission also recently authorized several entities to operate mobile earth terminals and land earth stations via Inmarsat satellites to provide domestic and international mobile-satellite service in the L-band. The authorizations were granted pursuant to the ORBIT Act and our DISCO II decision. In the *Inmarsat Authorization Order*, the Commission stated that the permanent authority for the specified earth stations to communicate on frequencies in the lower L-band granted would not become effective until further action in this Lower L-Band proceeding. In the interim, the Commission granted applicants Special Temporary Authority to operate in the lower L-band subject to further action in the Lower L-band proceeding. It said that if the decision in the Lower L-Band Proceeding does not require modification of the authorizations granted for use of Inmarsat, the authorizations would become effective without further action by the applicants. Our decision in this proceeding requires modification only to the half-duplex terminal the authorizations granted to Comsat Corporation/Mobile Communications (Comsat) and Marinesat Communications Network d/b/s Stratos Communications (Stratos) for use of the Inmarsat system. Accordingly, the authorizations are now permanent. The authorizations recently granted to Comsat and Stratos for 1000 half-duplex terminals, each, are modified by this Order to be limited to a term of two years.

Final Regulatory Flexibility Certification

29. The Regulatory Flexibility Act of 1980, as amended (''RFA'') requires that a regulatory flexibility analysis be prepared for rulemaking proceedings, unless the agency certifies that ''the rule will not have a significant economic impact on a substantial number of small entities.'' The RFA generally defines ''small entity'' as having the same meaning as the terms ''small business,'' ''small organization,'' and ''small governmental jurisdiction.'' In addition, the term ''small business'' has the same meaning as ''small business concern'' under the Small Business Act. A small business concern is one that: (1) Is independently owned and operated; (2) is not dominant in its field or operation; and (3) satisfies any additional criteria established by the Small Business Administration (''SBA'').

30. The Report and Order adopts and incorporates into the Commission's service rules specific operational parameters and technical requirements to ensure that the integrity of maritime distress and safety will not be compromised by mobile satellite service operation in certain portions of the L-band. By this action the Commission is essentially codifying the same conditions that are placed on every mobile satellite service license for operation in these portions of the L-band. There are currently three entities, Motient Services, Inc., TMI Communications and Company, L.P., and the International Maritime Satellite Organization (''Inmarsat''), that are authorized to provide L-band mobile satellite service in the United States. None comes within the definition of small entity. We therefore certify that the adoption of this Report and Order will not have a significant economic impact on a substantial number of small entities. The Commission will send a

copy of the Report and Order, including a copy of this final certification, in a report to Congress pursuant to the Small Business Regulatory Enforcement Fairness Act of 1996. In addition, the Report and Order and this final certification will be sent to the Chief Counsel for Advocacy of the SBA and will be published in the **Federal Register**.

Ordering Clauses

31. Pursuant to sections 1, 2, 4(i), 303(c), 303(f), 303(g), and 303(r), of the Communications Act of 1934, as amended, 47 U.S.C. 151, 152,154(i), 303(c), 303(f), 303(g), 303(r), parts 2 and 25 of the Commission's rules *are amended* as specified in rule changes effective September 6, 2002.

List of Subjects in CFR Part 25

Satellites.

Federal Communications Commission.

William F. Caton,

Deputy Secretary.

Rules Changes

For the reasons discussed in the preamble, the Federal Communications Commission amends 47 CFR part 25 as follows:

PART 25—SATELLITE COMMUNICATIONS

1. The authority citations for part 25 continue to read as follows:

Authority: 47 U.S.C. 701–744. Interprets or applies 47 U.S.C. sections 51, 152, 154, 302, 303, and 307, unless otherwise noted.

2. Section 25.136 is amended by revising the section heading, the introductory text, and by adding paragraphs (d) and (e) to read as follows:

§ 25.136 Operating provisions for earth stations for each station network in the 1.6/2.4 GHz and 1.5/1.6 GHz mobile-satellite services.

In addition to the technical requirements specified in § 25.213, earth stations operating in the 1.6/2.4 GHz and 1.5/1.6 GHz Mobile Satellite Services are subject to the following operating conditions:

* * * * *

(d) Any mobile earth station (MES) associated with the Mobile Satellite Service operating in the 1530–1544 MHz and 1626.5–1645.5 MHz bands shall have the following minimum set of capabilities to ensure compliance with Footnote S5.353A and the priority and real-time preemption requirements imposed by Footnote US315.

(1) All MES transmissions shall have a priority assigned to them that preserves the priority and preemptive access given to maritime distress and safety communications sharing the band.

(2) Each MES with a requirement to handle maritime distress and safety data communications shall be capable of either:

(i) Recognizing message and call priority identification when transmitted from its associated Land Earth Station (LES) or

(ii) Accepting message and call priority identification embedded in the message or call when transmitted from its associated LES and passing the identification to shipboard data message processing equipment

(3) Each MES shall be assigned a unique terminal identification number that will be transmitted upon any attempt to gain access to a system.

(4) After an MES has gained access to a system, the mobile terminal shall be under control of a LES and shall obtain all channel assignments from it.

(5) All MESs that do not continuously monitor a separate signalling channel or signalling within the communications channel shall monitor the signalling channel at the end of each transmission.

(6) Each MES shall automatically inhibit its transmissions if it is not correctly receiving separate signalling channel or signalling within the communications channel from its associated LES.

(7) Each MES shall automatically inhibit its transmissions on any or all channels upon receiving a channel-shut-off command on a signalling or communications channel it is receiving from its associated LES.

(8) Each MES with a requirement to handle maritime distress and safety communications shall have the capability within the station to automatically preempt lower precedence traffic.

(e) Any Land Earth Station (LES) associated with the Mobile Satellite Service operating in the 1530–1544 MHz and 1626.5–1645.5 MHz bands shall have the following minimum set of capabilities to ensure that the MSS system complies with Footnote S5.353A and the priority and real-time preemption requirements imposed by Footnote US315. It should be noted that the LES operates in the Fixed-Satellite Service (''FSS'') as a feeder-link for the MSS (Radio Regulations 71) and that the following capabilities are to facilitate the priority and preemption requirements. The FSS feeder-link stations fulfilling these MSS requirements shall not have any additional priority with respect to FSS stations operating with other FSS systems.

(1) All LES transmissions to mobile earth stations (MESs) shall have a priority assigned to them that preserves the priority and preemptive access given to maritime distress and safety communications.

(2) The LES shall recognize the priority of calls to and from MES and make channel assignments taking into account the priority access that is given to maritime distress and safety communications.

(3) The LES shall be capable of receiving the MES identification number when transmitted and verifying that it is an authorized user of the system to prohibit unauthorized access.

(4) The LES shall be capable of transmitting channel assignment commands to the MESs.

(5) The communications channels used between the LES and the MES shall have provision for signalling within the voice/data channel, for an MES, which does not continuously monitor the LES signalling channel during the time of a call.

(6) The LES shall transmit periodic control signalling signals to MES, which do not continuously monitor the LES signalling channel.

(7) The LES shall automatically inhibit all transmissions to MESs to which it is not transmitting a signalling channel or signalling within the communications channel.

(8) The LES shall be capable of transmitting channel-shut-off commands to the MESs on signalling or communications channels.

(9) Each LES shall be capable of interrupting, and if necessary, preempting ongoing routine traffic from an MES in order to complete a maritime distress, urgency or safety call to that particular MES.

(10) Each LES shall be capable of automatically turning off one or more of its associated channels in order to complete a maritime distress, urgency or safety call.

[FR Doc. 02–19889 Filed 8–6–02; 8:45 am]

BILLING CODE 6712–01–P

FEDERAL COMMUNICATIONS COMMISSION

47 CFR Parts 25 and 100

[IB Docket No. 98–21; FCC 02–110]

Policy and Rules for the Direct Broadcast Satellite Service

AGENCY: Federal Communications Commission.

ACTION: Final rule.

SUMMARY: In this document the Federal Communications Commission has adopted a *Report and Order* that modifies direct broadcast satellite (DBS) regulation to more closely reflect the regulation of other satellite services, and moves the rules for DBS, located in part 100, to part 25 (Satellite Communications) and eliminates part 100 of the Commission's rules. The Report and Order streamlines the regulation of this rapidly growing and changing service and helps promote fair and increased competition in the multi-channel video programming distribution (''MVPD'') market. These rules also promote efficient and expeditious use of spectrum and orbital resources while preserving maximum flexibility for DBS operators. The current rules in part 100, for the most part, were adopted almost 20 years ago when DBS was envisioned to be essentially a broadcast-type service. Since that time, the service has instead grown into a robust and successful segment of the satellite industry with programming services provided on a subscription basis. The service rules are revised to comport with the way that DBS actually operates.

DATES: Effective September 6, 2002.

FOR FURTHER INFORMATION CONTACT: For more information regarding the *Report and Order*, contact Selina Y. Khan, Attorney Advisor, Satellite Division, International Bureau, telephone (202) 418–7282 or via the Internet at *skhan@fcc.gov*. For additional information concerning the information collections contained in this document, contact Judy Boley at (202) 418–0214, or via the Internet at *jboley@fcc.gov.*

SUPPLEMENTARY INFORMATION: This is a summary of the Commission's *Report and Order* (R&O), IB Docket 98–21, FCC 02–110, adopted April 8, 2002 and released June 13, 2002. The complete text of this *Report and Order* is available for inspection and copying during normal business hours in the FCC Reference Information Center, Portals II, 445 12th Street, SW, Room CY–A257, Washington, DC. This document may also be purchased from the Commission's duplicating contractor, Qualex International, Portals II, 445 12th Street SW, Room CY–B402, Washington, DC 20554, telephone (202)863–2893, facsimile (202)863–2898 or via email *qualexint@aol.com*. It is also available on the Commission's website at *http://www.fcc.gov.*

Paperwork Reduction Act

1. This *Report and Order* contains new information collections. The Federal Communications Commission, as part of its continuing effort to reduce paperwork burden, invites the general public and the Office of Management and Budget (OMB) to comment on the information collection(s) contained in this *Report and Order,* as required by the Paperwork Reduction Act of 1995, Public Law 104–13. This *Report and Order* has been submitted to OMB for review under the emergency clearance provisions of the PRA. Public and agency comments are due September 6, 2002. Emergency clearance is requested no later than September 6, 2002.

2. The Commission, under the normal provisions of the PRA, invites the general public, and other Federal agencies to comment on the information collections contained in this proceeding prior to submitting it to OMB for review. Public and agency comments are due September 6, 2002.

3. Comments should address: (a) Whether the modified collection of information is necessary for the proper performance of the functions of the Commission, including whether the information shall have practical utility; (b) the accuracy of the Commission's burden estimates; (c) ways to enhance the quality, utility, and clarity of the information collected; and (d) ways to minimize the burden of the collection of information on the respondents, including the use of automated collection techniques or other forms of information technology.

OMB Control Number: 3060–0683.

Title: Direct Broadcast Satellite Service.

Type of Review: Revision of a currently approved collection.

Respondents: Business or other for-profit entities.

Number of Respondents: 6.

Estimated Time Per Response: 1.5–20 hours.

Frequency of Response: On occasion.

Total Annual Burden: 300 hours.

Total Annual Costs: $50,000.

Needs and Uses: The information collected will be used by the Federal Communications Commission as part of the application and licensing process for DBS entities. Specifically, applicants for the DBS service will be required to file their applications to conform to the newly-adopted service rules. Without the newly adopted rules, future DBS applicants do not have rules in effect to file under.

Summary of the Report and Order

4. The Federal Communications Commission has adopted a *Report and Order* that revises its rules and policies governing the Direct Broadcast Satellite (''DBS'') service. The *Report and Order* modifies DBS regulation to more closely reflect the regulation of other satellite services, moves the rules for DBS to part 25 and eliminates part 100.

5. The revisions will simplify the procedures applicable to DBS, eliminate unnecessary filing requirements, and harmonize the DBS licensing process with that of other satellite services. For example, the *Report and Order* eliminates the DBS-specific foreign ownership limits of § 100.11 of the Commission's rules and apply the statutory foreign ownership provision of section 310(b) of the Communications Act. The Commission also clarifies our geographic service rules to enhance the delivery of DBS service to the States of Alaska and Hawaii. The *Report and Order* updates and clarifies DBS technical rules, and clarify due diligence rules for DBS providers. In addition, the Commission moves the service-specific DBS auction rules to part 25 and defers to the Commission's general competitive bidding rules. Further, the Commission declines adopting any specific DBS ownership restrictions, but will continue to analyze DBS/DBS ownership issues in the context of assignment and transfer applications on a case-by-case basis.

6. In this *Report and Order* the Commission retains some DBS specific rules that reflect distinctions between DBS and other satellite services. Specifically, the *Report and Order* preserves certain specific part 100 rules (i.e. license terms, due diligence and geographic service requirements, competitive bidding, and technical requirements) in part 25 because DBS is a unique satellite service in some respects.

7. In this *Report and Order* the Commission eliminated § 100.11 of the Commission's rules. In first proposing rules in 1981, the Commission stated that it was seeking to apply an ''open and flexible approach'' to DBS to ''allow the business judgments of individual applicants to shape the character of the service offered.'' The Commission stated that it intended to impose on DBS ''only those regulatory requirements that [were] expressly mandated by the Communications Act'' to afford the DBS service maximum regulatory freedom to develop. In the Report and Order, the Commission stated that although § 100.11, by its literal terms, extends to all DBS providers, subscription as well as broadcast and common carrier, there is no indication, that the Commission, in 1982 when it adopted the rule, meant to impose foreign ownership restrictions on DBS providers that are not subject to the foreign ownership restrictions in section 310(b).

8. The Commission declined to impose specific foreign ownership

limitations on DTH–FSS licensees providing subscription service in addition to the statutory limitations in section 310(a) and (b) of the Act. The Commission stated that there are no additional foreign ownership rules for MVPD services provided to subscribers by means of cable or DTH satellite systems, other than those required by statute. The Commission found that adopting foreign ownership rules for DTH–FSS licensees providing subscription services would affect the competitiveness of DBS, DTH and of the MVPD markets, which would be inconsistent with the Commission's efforts to increase competition in the MVPD market. Moreover, the Commission has traditionally taken a deregulatory approach to DTH–FSS and have refrained from imposing unnecessary regulations. In addition, the Commission will apply the requirements set forth in *DISCO II* in deciding questions of access to the U.S. market by non-U.S. lice DBS providers will remain subject to the relevant statutory requirements of section 310 of the Act.'' Thus, all DBS providers will be subject to section 310(a) of the Communications Act and to the relevant sections of Section 310(b) of the Act.

9. The Commission recognizes the importance of establishing DBS as a competitor to cable in the multi-channel video programming distribution market in the States of Hawaii and Alaska. In this *Report and Order*, the Commission clarifies its geographic service rules to enhance the delivery of DBS service to the States of Alaska and Hawaii. Under current rules, DBS licensees must serve Alaska and Hawaii if technically feasible. In this *Report and Order*, the Commission recognizes that it is possible to provide service to Hawaii and also to significant portions of Alaska from the 101° W.L orbit location in addition to the 110° W.L. and 119° W.L. orbit locations. Furthermore, the Commission concludes that it is not technically feasible to serve either Alaska or Hawaii from the 61.5° W.L. orbit location. In this *Report and Order*, the Commission clarifies that DBS operators must offer packages of services in Alaska and Hawaii that are reasonably comparable to what they offer in the contiguous 48 states. In an effort to balance requirements to provide service to all 50 states, and in order to avoid dictating system design or business plans, the Commission declines to specifically define what constitutes full or comparable service although we expect that DBS operators will offer the same level of service to customers throughout all 50 states. Specifically, the Commission clarifies that it will consider a DBS provider to be in compliance with this requirement, contained in § 100.53 of the Commission's rules, only if it offers packages of services in Alaska and Hawaii that are reasonably comparable to what the provider offers in the contiguous 48 states.

10. The Commission does not adopt any specific DBS/cable cross-ownership restrictions. The Commission also deferred this issue to the *Cable Ownership Further Notice of Proposed Rulemaking* in 66 FR 51905, October 11, 2001. The Commission will analyze DBS/DBS ownership issues in the context of assignment and transfer applications on a case-by-case basis.

11. In December of 2002, the Commission decided to seek further comment on non-conforming uses of DBS spectrum because it appeared that there are a number of orbit locations, particularly those covering only the western part of the U.S., that are not being used to provide DBS service. Under current rules, a DBS licensee, after the first five years, must provide DBS service at least fifty percent of the time. In this *Report and Order* the Commission concludes that it will allow non-conforming use for all orbital locations, including the western orbital locations, for downlink services that meet the technical requirements for interference protection. The *Report and Order* allows DBS licensees are free to provide non-conforming services on as many transponders on any of their satellites for as large a fraction of the time as they wish subject to the Commission's other requirements for DBS.

Final Regulatory Flexibility Analysis

12. The Regulatory Flexibility Act of 1980, as amended (''RFA''), requires that a regulatory flexibility analysis be prepared for notice and comment rule making proceedings, unless the agency certifies that ''the rule will not, if promulgated, have a significant economic impact on a substantial number of small entities.'' The RFA generally defines the term ''small entity'' as having the same meaning as the terms ''small business,'' ''small organization,'' and ''small governmental jurisdiction.'' In addition, the term ''small business'' has the same meaning as the term ''small business concern'' under the Small Business Act. A ''small business concern'' is one which: (1) Is independently owned and operated; (2) is not dominant in its field of operation; and (3) satisfies any additional criteria established by the Small Business Administration (''SBA'').

13. As required by the RFA, an Initial Regulatory Flexibility Analysis (''IRFA'') was incorporated in the *Notice of Proposed Rulemaking* (''NPRM'') in IB Docket No. 98–21, 63 FR 11202, March 6, 1998. The Commission sought written public comments on the proposals in the NPRM including comments on the IRFA. There were no comments, which discussed or addressed the IRFA; nor were there comments on the effect of the proposed rules on small businesses. Nonetheless, the Commission considered the potential significant economic impact of the proposed rules on small entities.

14. The *Report and Order* streamlines and harmonizes the Commission's direct broadcast satellite (''DBS'') service rules with other regulations governing satellite communications. Our objective is to consolidate, where possible, the DBS services rules with the rules for other satellite services and eliminate separate, DBS-specific rules in part 100 of the Commission's rules. Because DBS provides subscription services, DBS falls within the SBA-recognized definitions of ''Cable Networks'' and ''Cable and Other Program Distribution.'' These definitions provide that small entities are ones with $11.0 million or less in annual receipts. Small businesses, *i.e.* ones with less than $11.0 million in annual receipts, do not have the financial ability to become DBS licensees because of the high implementation costs associated with satellite services. Because this is an established service, with limited spectrum and orbital resources for assignment, we estimate that no more than 15 entities will be Commission licensees providing these services. In addition, because of the high implementation costs and the limited spectrum resources we believe that none of the 15 licensees will be small entities. We expect that no small entities will be impacted by this rulemaking. Therefore, we certify that the requirements of the *Report and Order* will not have a significant economic impact on a substantial number of small entities.

15. The Commission will send a copy of the *Report and Order*, including a copy of this Final Regulatory Flexibility Certification, in a report to Congress pursuant to the Congressional Review Act. In addition, the *Report and Order* and this final certification will be sent to the Chief Counsel for Advocacy of the SBA, and will be published in the **Federal Register**.

Ordering Clauses

16. Pursuant to sections 4(i), 7(a), 11, 303(c), 303(f), 303(g), and 303(r) of the

Communications Act of 1934, as amended, 47 U.S.C. 154(i), 157(a), 161, 303(c), 303(f), 303(g), 303(r), that the *Report and Order* is adopted. Part 25 of the Commission's rules is *amended as* specified in the rule change, effective September 6, 2002.

17. The Commission's Consumer and Governmental Affairs Bureau, Reference Information Center, *Shall send* a copy of this *Report and Order*, including the Final Regulatory Flexibility Certification, in a report to Congress pursuant to the Congressional Review Act, *see* 5 U.S.C. 801(a)(1)(A); and shall also send a copy of this *Report and Order*, including the Final Regulatory Flexibility Certification, to the Chief Counsel for Advocacy of the Small Business Administration. See 5 U.S.C. 605(b).

List of Subjects in 47 CFR Parts 25 and 100

Satellites.

Federal Communications Commission.

William F. Caton,

Deputy Secretary.

Rule Changes

For the reasons discussed in the preamble, under the authority of 47 U.S.C. 154(i) and 303 the Federal Communications Commission amends 47 CFR chapter I as follows:

PART 25—SATELLITE COMMUNICATIONS

1. The authority citation for part 25 continues to read as follows:

Authority: 47 U.S.C. 701–744. Interprets or applies Sections 4, 301, 302, 303, 307, 309, and 332 of the Communications Act, as amended, 47 U.S.C. Sections 154, 301, 302, 303, 307, 309, and 332, unless otherwise noted.

2. Section 25.109 is amended by removing paragraph (b) and by redesignating paragraph (c) as paragraph (b).

3. Section 25.111 is amended by adding paragraph (c) to read as follows:

§ 25.111 Additional information.

* * * * *

(c) In the Direct Broadcast Satellite service, applicants and licensees shall also provide the Commission with all information it requires in order to modify the Appendix 30 Broadcasting-Satellite Service (''BSS'') Plans and associated Appendix 30A feeder-link Plans, if the system uses technical characteristics differing from those specified in the Appendix 30 BSS Plans, the Appendix 30A feederlink Plans, Annex 5 to Appendix 30 or Annex 3 to Appendix 30A. For such systems, no protection from interference caused by radio stations authorized by other Administrations is guaranteed until the agreement of all affected Administrations is obtained and the frequency assignment becomes a part of the appropriate Region 2 BSS and feeder-link Plans. Authorizations for which coordination is not completed and/or for which the necessary agreements under Appendices 30 and 30A have not been obtained may be subject to additional terms and conditions as required to effect coordination or obtain the agreement of other Administrations. Applicants and licensees shall also provide the Commission with the necessary Appendix 4 information required by the ITU Radiocommunication Bureau to advance publish, coordinate and notify the frequencies to be used for tracking, telemetry and control functions of DBS systems.

4. Section 25.114 is amended revising paragraphs (c)(13) and (c)(14), and adding paragraph (c)(22) to read as follows:

§ 25.114 Applications for space station authorizations.

* * * * *

(c) * * *

(13) Space station license applicants subject to this section other than Direct Broadcast Satellite applicants shall provide detailed information demonstrating the financial qualifications of the applicant to construct and launch the proposed satellites. Applications shall provide the financial information required by §§ 25.140 (b) through (e), 25.142(a)(4), or 25.143(b)(3), as appropriate;

(14) A clear and detailed statement of whether the space station is to be operated on a common carrier basis, or whether non-common carrier transactions are proposed. If non-common carrier transactions are proposed, describe the nature of the transactions and specify the number of transponders to be offered on a non-common carrier basis. In addition, satellite applications in the Direct Broadcast Satellite service must provide a clear and detailed statement of whether the space station is to be operated on a broadcast or non-broadcast basis.

* * * * *

(22) For satellite applications in the Direct Broadcast Satellite service, if the proposed system's technical characteristics differ from those specified in the Appendix 30 BSS Plans, the Appendix 30A feeder link Plans, Annex 5 to Appendix 30 or Annex 3 to Appendix 30A, each applicant shall provide:

(i) The information requested in Appendix 4 of the ITU's Radio Regulations. Further, applicants shall provide sufficient technical showing that the proposed system could operate satisfactorily if all assignments in the BSS and feeder link Plans were implemented; and

(ii) Analyses of the proposed system with respect to the limits in Annex 1 to Appendices 30 and 30A.

* * * * *

5. Section 25.121 is amended by revising paragraph (a) to read as follows:

§ 25.121 License term and renewals.

(a) *License Term.* Except for licenses for DBS facilities, licenses for facilities governed by this part will be issued for a period of 15 years. Licenses for DBS space stations licensed as broadcast facilities will be issued for a period of 8 years. Licenses for DBS space stations not licensed as broadcast facilities will be issued for a period of 10 years.

* * * * *

6. Add § 25.148 to read as follows:

§ 25.148 Licensing provisions for the Direct Broadcast Satellite Service.

(a) *License terms.* License terms for DBS facilities are specified in § 25.121(a).

(b) *Due diligence.* (1) All persons granted DBS authorizations shall proceed with due diligence in constructing DBS systems. Permittees shall be required to complete contracting for construction of the satellite station(s) within one year of the grant of the authorization. The satellite stations shall also be required to be in operation within six years of the authorization grant.

(2) In addition to the requirements stated in paragraph (b)(1) of this section, all persons who receive new or additional DBS authorizations after January 19, 1996 shall complete construction of the first satellite in their respective DBS systems within four years of grant of the authorization. All satellite stations in such a DBS system shall be in operation within six years of the grant of the authorization.

(3) DBS licensees shall be required to proceed consistent with all applicable due diligence obligations, unless otherwise determined by the Commission upon proper showing in any particular case. Transfer of control of the authorization shall not be considered to justify extension of these deadlines.

(c) *Geographic service requirements.* Those entities acquiring DBS authorizations after January 19, 1996, or

who after January 19, 1996 modify a previous DBS authorization to launch a replacement satellite, must provide DBS service to Alaska and Hawaii where such service is technically feasible from the authorized orbital location. This requirement does not apply to DBS satellites authorized to operate at the 61.5° W.L. orbital location. DBS applicants seeking to operate from locations other than 61.5° W.L. who do not provide service to Alaska and Hawaii, must provide technical analyses to the Commission demonstrating that such service is not feasible as a technical matter, or that while technically feasible such services would require so many compromises in satellite design and operation as to make it economically unreasonable.

(d) *DBS subject to competitive bidding.* Mutually exclusive initial applications to provide DBS are subject to competitive bidding procedures. The general competitive bidding procedures set forth in part 1, subpart Q of this chapter will apply unless otherwise provided in this part.

(e) *DBS long form application.* Winning bidders are subject to the provisions of § 1.2107 of this chapter except that in lieu of a FCC Form 601 each winning bidder shall submit the long-form satellite service application (FCC Form 312) within thirty (30) days after being notified by Public Notice that it is the winning bidder. Each winning bidder will also be required to submit by the same deadline the information described in § 25.215 (Technical) and § 25.601 (EEO), and in paragraph (f) of this section. Each winner also will be required to file, by the same deadline, a signed statement describing its efforts to date and future plans to come into compliance with any applicable spectrum limitations, if it is not already in compliance. Such information shall be submitted pursuant to the procedures set forth in § 25.114 and any associated Public Notices.

(f) *Technical qualifications.* DBS operations must be in accordance with the sharing criteria and technical characteristics contained in Appendices 30 and 30A of the ITU's Radio Regulations. Operation of systems using differing technical characteristics may be permitted, with adequate technical showing, and if a request has been made to the ITU to modify the appropriate Plans to include the system's technical parameters.

7. Section 25.201 is amended by adding the following definition in alphabetical order to read as follows:

§ 25.201 Definitions.

* * * * *

Direct Broadcast Satellite Service. A radiocommunication service in which signals transmitted or retransmitted by space stations, using frequencies specified in § 25.202(a)(7), are intended for direct reception by the general public. For the purposes of this definition, the term direct reception shall encompass both individual reception and community reception.

* * * * *

8. Section 25.202 is amended by revising footnote 9 in paragraph (a)(1) and by adding paragraph (a)(7) to read as follows:

§ 25.202 Frequencies, frequency tolerance and emission limitations.

(a) * * *

* * * * *

[9] The use of the band 17.3–17.8 GHz by the Fixed-Satellite Service (Earth-to-space) is limited to feeder links for the Direct Broadcast Satellite Service, and the sub-band 17.7–17.8 GHz is shared co-equally with terrestrial fixed services.

* * * * *

(7) The following frequencies are available for use by the Direct Broadcast Satellite service:

12.2–12.7 GHz: Space-to-Earth.

* * * * *

9. Add § 25.215 to read as follows:

§ 25.215 Technical requirements for space stations in the Direct Broadcast Satellite Service.

In addition to § 25.148(f), space station antennas operating in the Direct Broadcast Satellite Service must be designed to provide a cross-polarization isolation such that the ratio of the on-axis co-polar gain to the cross-polar gain of the antenna in the assigned frequency band shall be at least 30 dB within its primary coverage area.

10. Section 25.601 is revised to read as follows:

§ 25.601 Equal employment opportunity requirement.

Notwithstanding other EEO provisions within these rules, an entity that uses an owned or leased fixed-satellite service or direct broadcast satellite service facility (operating under this part) to provide video programming directly to the public on a subscription basis must comply with the equal employment opportunity requirements set forth in part 76, subpart E, of this chapter, if such entity exercises control (as defined in part 76, subpart E, of this chapter) over the video programming it distributes. Notwithstanding other EEO provisions within these rules, a licensee or permittee of a direct broadcast satellite station operating as a broadcaster must comply with the equal employment opportunity requirements set forth in part 73.

10a. Add subpart J to part 25 to read as follows:

Subpart J—Public Interest Obligations

§ 25.701 Public interest obligations.

(a) DBS providers are subject to the public interest obligations set forth in paragraphs (b) and (c) of this section. For purposes of this rule, DBS providers are any of the following:

(1) Entities licensed to operate satellites in the 12.2–12.7 GHz DBS frequency bands; or

(2) Entities licensed to operate satellites in the Ku-band fixed satellite service and that sell or lease capacity to a video programming distributor that offers service directly to consumers providing a sufficient number of channels so that four percent of the total applicable programming channels yields a set-aside of at least one channel of non-commercial programming pursuant to paragraph (c) of this section, or

(3) Non-U.S. licensed satellite operators in the Ku-band that offer video programming directly to consumers in the United States pursuant to an earth station license issued under part 25 of this title and that offer a sufficient number of channels to consumers so that four percent of the total applicable programming channels yields a set-aside of one channel of non-commercial programming pursuant to paragraph (c) of this section,

(b) *Political broadcasting requirements*—(1) *Reasonable access.* DBS providers must comply with Section 312(a)(7) of the Communications Act of 1934, as amended, by allowing reasonable access to, or permitting purchase of reasonable amounts of time for, the use of their facilities by a legally qualified candidate for federal elective office on behalf of his or her candidacy.

(2) *Use of facilities.* DBS providers must comply with Section 315 of the Communications Act of 1934, as amended, by providing equal opportunities to legally qualified candidates.

(c) *Carriage obligation for noncommercial programming*—(1) *Reservation requirement.* DBS providers shall reserve four percent of their channel capacity exclusively for use by qualified programmers for noncommercial programming of an educational or informational nature. Channel capacity shall be determined annually by calculating, based on measurements taken on a quarterly basis, the average number of channels

available for video programming on all satellites licensed to the provider during the previous year. DBS providers may use this reserved capacity for any purpose until such time as it is used for noncommercial educational or informational programming.

(2) *Qualified programmer.* For purposes of these rules, a qualified programmer is:

(i) A noncommercial educational broadcast station as defined in section 397(6) of the Communications Act of 1934, as amended,

(ii) A public telecommunications entity as defined in section 397(12) of the Communications Act of 1934, as amended,

(iii) An accredited nonprofit educational institution or a governmental organization engaged in the formal education of enrolled students (A publicly supported educational institution must be accredited by the appropriate state department of education; a privately controlled educational institution must be accredited by the appropriate state department of education or the recognized regional and national accrediting organizations), or

(iv) A nonprofit organization whose purposes are educational and include providing educational and instructional television material to such accredited institutions and governmental organizations.

(v) Other noncommercial entities with an educational mission.

(3) *Editorial control.* (i) A DBS operator will be required to make capacity available only to qualified programmers and may select among such programmers when demand exceeds the capacity of their reserved channels.

(ii) A DBS operator may not require the programmers it selects to include particular programming on its channels.

(iii) A DBS operator may not alter or censor the content of the programming provided by the qualified programmer using the channels reserved pursuant to this section.

(4) *Non-commercial channel limitation.* A DBS operator cannot initially select a qualified programmer to fill more than one of its reserved channels except that, after all qualified entities that have sought access have been offered access on at least one channel, a provider may allocate additional channels to qualified programmers without having to make additional efforts to secure other qualified programmers.

(5) *Rates, terms and conditions.* (i) In making the required reserved capacity available, DBS providers cannot charge rates that exceed costs that are directly related to making the capacity available to qualified programmers. Direct costs include only the cost of transmitting the signal to the uplink facility and uplinking the signal to the satellite.

(ii) Rates for capacity reserved under paragraph (a) of this section shall not exceed 50 percent of the direct costs as defined in this section.

(iii) Nothing in this section shall be construed to prohibit DBS providers from negotiating rates with qualified programmers that are less than 50 percent of direct costs or from paying qualified programmers for the use of their programming.

(iv) DBS providers shall reserve discrete channels and offer these to qualifying programmers at consistent times to fulfill the reservation requirement described in these rules.

(6) *Public file.* (i) Each DBS provider shall keep and permit public inspection of a complete and orderly record of:

(A) Quarterly measurements of channel capacity and yearly average calculations on which it bases its four percent reservation, as well as its response to any capacity changes;

(B) A record of entities to whom noncommercial capacity is being provided, the amount of capacity being provided to each entity, the conditions under which it is being provided and the rates, if any, being paid by the entity;

(C) A record of entities that have requested capacity, disposition of those requests and reasons for the disposition; and

(D) A record of all requests for political advertising time and the disposition of those requests.

(ii) All records required by this paragraph shall be placed in a file available to the public as soon as possible and shall be retained for a period of two years.

(7) *Effective date.* DBS providers are required to make channel capacity available pursuant to this section upon the effective date. Programming provided pursuant to this rule must be available to the public no later than six months after the effective date.

PART 100—[REMOVED]

11. Remove part 100.

[FR Doc. 02–19888 Filed 8–6–02; 8:45 am]

BILLING CODE 6712–01–P

FEDERAL COMMUNICATIONS COMMISSION

47 CFR Part 73

[MM Docket 01–276; FCC 02–209]

Table of Allotments To Delete Noncommercial Reservation on Channel *16, 482–488 MHz, Pittsburgh, PA

AGENCY: Federal Communications Commission.

ACTION: Final rule.

SUMMARY: The Commission has before it a petition filed by WQED Pittsburgh (''QED''), licensee of noncommercial educational television stations WQED(TV), Channel *13 and WQEX(TV), Channel *16 in Pittsburgh, wherein it requests that the Commission dereserve Channel *16 and permit QED to sell the station to ShootingStar, a commercial entity. The Commission grants QED's request and permits QED to sell WQEX(TV) and use the proceeds to improve its financial condition, construct DTV facilities for its remaining station, and fund a permanent programming endowment.

DATES: Effective September 6, 2002.

FOR FURTHER INFORMATION CONTACT: Joyce Bernstein (202) 418–1600, Video Division, Media Bureau.

SUPPLEMENTARY INFORMATION: This is a synopsis of the Commission's *Report and Order Amendment of the Television Table of Allotments to Delete Noncommercial Reservation on Channel *16, 482–488 MHz, Pittsburgh, Pennsylvania* (''Report and Order''), MM Docket, 01–276, FCC 02–209, adopted July 11, 2002 and released July 18, 2002. The full text of this *Report and Order* is available for inspection and copying during normal business hours in the FCC Reference Room, Room CY–A257, Portals II, 445 12th Street, SW., Washington, DC, and also may be purchased from the Commission's copy contractor, Vistronix, Inc.

Synopsis of Report and Order

The *Report and Order* finds that QED remains in financial distress, that it has taken dramatic steps to improve its financial condition, including reducing its workforce by half and selling available assets, and that QED and its auditors both conclude that the sale of WQEX(TV) as a commercial station is crucial to QED's financial recovery. The *Report and Order* also concludes that the Pittsburgh area can no longer support both WQED(TV) and WQEX(TV), given its population decline, and the downward trend in

contributions to QED. On balancing the needs and abilities of QED, given its financial condition and the community from which it derives support, the Commission finds that the continued use of the second channel is no longer necessary to meet the educational, instructional and cultural needs of the Pittsburgh community, especially since upon dereservation and sale of WQEX(TV), and initiation of digital service, QED will be able to substantially increase the amount of free over-the-air educational service.

The *Report and Order* concludes that QED's circumstances are highly unique and that the public interest would be served by waiving the Commission's policy disfavoring dereservation. The *Report and Order* also concludes that the record supports waiver of the policy requiring that newly dereserved channels be made available for competing applications.

Procedural Matters

The Commission has determined that the relevant provisions of the Regulatory Flexibility Act of 1980 do not apply to rule making proceeds to amend the TV and DTV Table of Allotments, §§ 73.606 and 73.622(b). *See Certification that Sections 603 and 604 of the Regulatory Flexibility Act Do Not Apply to Rule Making to Amend Sections 73.202(b), 73.504, and 73.606(b) of the Commission's Rules,* 46 FR 11549, February 9, 1981.

Ordering Clauses

The Commission further finds that unique public interest considerations and benefits support a waiver of the policy set forth in the Sixth Report and Order requiring that newly dereserved channels be made available for competing applications.

It is further ordered, That pursuant to Section 316(a) of the Communications Act of 1934, as amended, the authorization of WQED Pittsburgh for station WQEX(TV) *is modified* to specify operation on Channel 16 in lieu of Channel *16.

List of Subjects 47 CFR Part 73

Digital television broadcasting, Television.

Federal Communications Commission.

Marlene H. Dortch,

Secretary.

For the reasons discussed in the preamble, the Federal Communications Commission amends 47 CFR part 73 as follows:

PART 73—RADIO BROADCAST SERVICES

1. The authority citation for part 73 continues to read as follows:

Authority: 47 U.S.C. 154, 303, 334 and 336.

§ 73.606 [Amended]

2. Section 73.606, the Table of TV Allotments under Pennsylvania is amended by removing Channel *16 at Pittsburgh and adding in its place Channel 16 at Pittsburgh.

§ 73.622 [Amended]

3. Section 73.622(b), the Table of Digital Television Allotments under Pennsylvania is amended by removing Channel *26 at Pittsburgh and adding in its place Channel 26 at Pittsburgh.

[FR Doc. 02–20071 Filed 8–6–02; 12:45 pm]

BILLING CODE 6712–01–P

DEPARTMENT OF THE INTERIOR

Fish and Wildlife Service

50 CFR Part 17

RIN 1018–AI18

Endangered and Threatened Wildlife and Plants; Determination of Endangered Status for the Carson Wandering Skipper

AGENCY: Fish and Wildlife Service, Interior.

ACTION: Final rule.

SUMMARY: We, the U.S. Fish and Wildlife Service (Service), determine the Carson wandering skipper (*Pseudocopaeodes eunus obscurus*) to be endangered under the Endangered Species Act of 1973, as amended (Act). The Carson wandering skipper is currently known from only two populations, one in Washoe County, Nevada, and one in Lassen County, California. The subspecies is found in grassland habitats on alkaline substrates.

Extinction could occur from naturally occurring events or other threats due to the small, isolated nature of the known populations of the Carson wandering skipper. These threats include habitat destruction, degradation, and fragmentation due to urban and residential development, wetland habitat modification, agricultural practices (such as excessive livestock grazing), gas and geothermal development, and nonnative plant invasion. Other threats include collecting, livestock trampling, water exportation projects, road construction, recreation, pesticide drift, and inadequate regulatory mechanisms. We find these threats constitute immediate and significant threats to the Carson wandering skipper. This rule implements Federal protection provided by the Act for the subspecies.

DATES: This rule becomes effective on August 7, 2002.

ADDRESSES: The complete file for this rule is available for inspection, by appointment, during normal business hours at the U.S. Fish and Wildlife Service, Nevada Fish and Wildlife Office, 1340 Financial Boulevard, Suite 234, Reno, NV 89502.

FOR FURTHER INFORMATION CONTACT: Robert D. Williams, Field Supervisor, Nevada Fish and Wildlife Office (see **ADDRESSES** section) (telephone 775/861–6300; facsimile 775/861–6301), or Wayne White, Field Supervisor, Sacramento Fish and Wildlife Office, 2800 Cottage Way, Room W–2605, Sacramento, CA 95825–1846 (telephone 916/414–6000; facsimile 916/414–6712).

SUPPLEMENTARY INFORMATION:

Background

The genus *Pseudocopaeodes* in the family Hesperiidae and subfamily Hesperiinae (grass skippers) contains only one species, *Pseudocopaeodes eunus.* Members of Hesperiidae are called skippers because of their powerful flight. While their flight may be faster than butterflies, they seldom fly far and few species migrate (Scott 1986).

The species *Pseudocopaeodes eunus* is thought to consist of five subspecies. The Carson wandering skipper (*P. e. obscurus*) is locally distributed in grassland habitats on alkaline substrates in eastern California and western Nevada. *P. e. eunus* is located in western desert areas of southern California; *P. e. alinea* is found in eastern desert areas of southern California and in southern Nevada; and *P. e. flavus* is found in western and central Nevada (Brussard 2000). In 1998, what is believed to be an undescribed fifth subspecies of *P. eunus* was found in Mono County, California. George Austin of the Nevada State Museum and Historical Society in Las Vegas is working to formally describe this fifth subspecies (Brussard 2000). Except for the Carson wandering skipper, the subspecies of *P. eunus* do not have universally accepted common names.

The Carson wandering skipper was collected in 1965 by Peter Herlan, Nevada State Museum, at a location north of U.S. Highway 50, Carson City, Nevada. It was first described by George Austin and John Emmel (1998), based

on 51 adult specimens. The body is tawny orange above except for a narrow uniform border and black veins near the border at the outer edge of the wing. The upper forewing and hindwing are orange with darker smudging. The lower surface of the hindwings is pale creamy orange with two creamy rays extending from the base of the wing to its margin, and there may be dusky suffusions along the wing veins (MacNeill 1975). Males tend to average 13.1 millimeters (mm) (0.52 inches (in)) in size (ranging from 12.0 to 13.9 mm (0.47 to 0.55 in)) (size is forewing length from base to apex). Females average 14.7 mm (0.58 in) in size, and range from 13.4 to 15.6 mm (0.53 to 0.61 in) from forewing base to apex. The female's dorsal (upper) surface is similar to the male's but with heavier dusting on the discal (relating to a disk) area of the hindwing. The female's ventral surface (undersurface of the abdomen) is similar in appearance to the male's (Austin and Emmel 1998).

The Carson wandering skipper can be distinguished from the other subspecies of *Pseudocopaeodes eunus* by a combination of several characteristics. The Carson wandering skipper is browner and less intensely orange on its dorsal surface, with thicker black coloring along the veins, outer margin, and on both basal surfaces; and it is duller, overall, with an expanse of bright yellow and orange ground color, especially on the ventral surface, interrupted by broadly darkened veins (Austin and Emmel 1998).

Carson wandering skipper females lay their cream-colored eggs on salt grass (*Distichlis spicata* (L.) Greene) (Hickman 1993), the larval host plant for the subspecies (Garth and Tilden 1986; Scott 1986). This is a common plant species in the saltbush-greasewood community of the intermountain west. Salt grass usually occurs where the water table is high enough to keep its roots saturated for most of the year (West 1988, as cited in Brussard *et al.* 1998).

No other observations have been made of the early life stages of the Carson wandering skipper. However, the Carson wandering skipper's life cycle is likely similar to other species of Hesperiinae. Larvae (immature, wingless, often worm-like form) of the subfamily Hesperiinae live in silked-leaf nests, and some species make their nests partially underground. Larvae are usually green or tan and have a dark head and black collar. Pupae (intermediate stage between larvae and adult) generally rest in the nest, and larvae generally hibernate (Scott 1986). Minno (1994) described a last instar (stage between molts) larvae and a pupa of *Pseudocopaeodes eunus,* based on one specimen of each collected in California. Some larvae may be able to extend their period of diapause (period of dormancy) for more than one season depending on the individual and environmental conditions (Dr. Peter Brussard, University of Nevada, Reno, pers. comm., 2001). Carson wandering skippers may differ from other *P. eunus* in producing only one brood per year during June to mid-July (Austin and Emmel 1998).

The other subspecies produce a second brood in late July to late September (Austin and Emmel 1998). Sites occupied by the Carson wandering skipper have been searched during August and September and a second brood has not been found (Austin and Emmel 1998; Brussard *et al.* 1999). However, additional research is needed to confirm that the Carson wandering skipper produces only one brood per year.

Little is known about the specific habitat requirements of the Carson wandering skipper, beyond the similarities recognized among known locations of this subspecies. As a result, the habitat requirements stated could apply to the species as a whole (Brussard *et al.* 1999). Habitat requirements for butterflies in general include: (1) Presence of a larval host plant; (2) appropriate thermal environment for larval development and diapause, and adult mate location and oviposition (to lay eggs); and (3) a nectar source (Brussard *et al.* 1999). Based on commonalities of known, occupied sites, suitable habitat for the Carson wandering skipper has the following characteristics: elevation of less than 1,524 meters (5,000 feet); located east of the Sierra Nevada; presence of salt grass; open areas near springs or water; and geothermal activity.

There are no data in the literature on the micro-habitat requirements of the Carson wandering skipper (Brussard *et al.* 1999). However, it is likely that suitable larval habitat is related to the water table. Many salt grass areas are inundated in the spring, and larvae do not develop under water. During wet years, larval survival depends on salt grass areas being above standing water. In dry years, survival is probably related to the timing of the host plant senescence (aging). Therefore, micro-topographic variation (slight irregularities of a land surface) is probably important for larval survival because it provides a greater variety of appropriate habitat over time (Brussard *et al.* 1999). Since the few historic collections of the Carson wandering skipper have been near hot springs, it is possible this subspecies may require the higher water table or ground temperatures associated with these areas to provide the appropriate temperatures for successful larval development (Brussard *et al.* 1999).

Adult Carson wandering skippers require nectar for food. Adults of all the species in the grass skipper subfamily seem to visit flowers, and sap-feeding is absent or rare (Scott 1986). There are no known observations of the Carson wandering skipper utilizing mud or other substances to obtain nutrients (P. Brussard, pers. comm., 2002a). Few plants that can serve as nectar sources grow in the highly alkaline soils occupied by salt grass. For a salt grass area to be appropriate habitat for the Carson wandering skipper, an appropriate nectar source must be present and in bloom during the flight season. Plant species known to be used by the Carson wandering skipper for nectar include a mustard (*Thelypodium crispum*), racemose golden-weed (*Pyrrocoma racemosus*), and slender birds-foot trefoil (*Lotus tenuis*) (Brussard *et al.* 1999). If alkaline-tolerant plant species are not present, but there is a fresh-water source to support alkaline-intolerant nectar sources adjacent to the larval host plant, the area may provide suitable habitat (Brussard *et al.* 1999).

No information is available on historic population numbers of the Carson wandering skipper. It is possible that a fairly large population of the subspecies occurred from the Carson Hot Springs site to the Carson River. Outflow from the springs likely supported a water table high enough for salt grass and a variety of nectar sources to grow. Urban development, water diversions, and wetland manipulations have eliminated most of the habitat type in this area (Brussard 2000).

Likewise, it is possible that appropriate habitat once existed for the Carson wandering skipper between the existing populations in Lassen County, California, and Washoe County, Nevada (P. Brussard, pers. comm., 2001). The population locations are approximately 120 kilometers (km) (75 miles (mi)) apart, and while the dispersal capability of the Carson wandering skipper is unknown, it is unlikely that any current genetic exchange occurs between the two populations. Over time, the habitat between the two populations has become unsuitable and fragmented due to agriculture and development, and the two populations have become isolated from one another. The subspecies likely represents a remnant of a more widely distributed complex of populations in

the western Lahontan basin (Brussard *et al.* 1999).

In 1998, collections of four of the *Pseudocopaeodes eunus* subspecies were made for a genetic study by University of Nevada-Reno (UNR) researchers (Brussard *et al.* 1999). In addition to collections made of the Carson wandering skipper at the Washoe County site (24) and the Lassen County site (25), individuals of three other *P. eunus* subspecies (173) were also collected. *P. e. eunus* individuals were not collected due to their scarcity. Genetic analysis was based on an analysis of allozyme (*i.e.,* protein) variation (Brussard *et al.* 1999). Levels of heterozygosity (genetic variability) were low in all but two populations of *P. eunus,* and the average heterozygosity over the nine populations was also low. The low levels of heterozygosity in many of the populations is likely due to repeated extirpation events, recolonizations, and population and genetic bottlenecks throughout the Holocene geologic period (beginning 10,000 years ago) to the present time (Brussard *et al.* 1999).

Population Sites

Historically, population locations included the type locality found near the Carson Hot Springs in Carson City, Carson City County, NV, and one other site in Lassen County, CA. When described in Austin and Emmel (1998), specimens from two additional sites, Dechambean Hot Springs at Mono Lake and Hot Springs, Mono County, CA, were assigned, with uncertainty due to their small numbers, to the Carson wandering skipper subspecies. Based on 1998 surveys by Brussard *et al.* (1999), these Mono County specimens would be more appropriately assigned to the currently undescribed subspecies (George Austin, Nevada State Museum and Historical Society, pers. comm., 2001).

Surveys conducted in 1997 in the vicinity of Carson City, and in 1998 throughout potential, suitable habitat in Nevada and California, found two new nectar sites occupied by the Carson wandering skipper. One site was located in Washoe County, NV, and the other site (two locations) was found in Lassen County, CA. The site in Lassen County could be a rediscovery of the area where Carson wandering skippers were collected in the 1970s; however, the collection record is too vague to be certain (P. Brussard, pers. comm., 2001). Despite additional, more limited attempts at finding other populations in 2000 and 2001, none have been found (P. Brussard, pers. comm., 2000; Rebecca Niell, UNR, pers. comm., 2001). While results of the surveys conducted in 2001 for the other subspecies of *Pseudocopaeodes eunus* are still pending, no new Carson wandering skipper populations were found during these surveys (R. Niell, pers. comm., 2002).

Carson City Site

The Carson City site was surveyed for the Carson wandering skipper by the UNR from 1997 to 2001. Only five individuals (four males and one female) were observed during surveys in June 1997. One possible sighting of a Carson wandering skipper occurred at a project site in 1998 (Brussard *et al.* 1999). No individuals were observed at this site in 1999 or 2000 (P. Brussard, pers. comm., 2000). In 2001, searches were again conducted with no individuals observed (R. Niell, pers. comm., 2001). Habitat changes resulting from drainage manipulations for residential and commercial development are likely responsible for this possible extirpation (Brussard *et al.* 1999). Construction of a freeway bypass will eliminate and fragment the remaining habitat (5 ha (12 ac)) of the Carson wandering skipper at this site.

An area just south of the Carson City site was also surveyed in 1997 and 1998. Twelve hectares (ha) (30 acres (ac)) of potential habitat were present (Paul Frost, Nevada Department of Transportation (NDOT), *in litt.*, 1998), however, no Carson wandering skippers were found during the surveys (Brussard *et al.* 1999). Approximately 5 ha (12 ac) of this potential habitat will be impacted by the construction of the Carson Highway 395 bypass (Alan Jenne, NDOT, pers. comm., 1999). Brussard *et al.* (1997) found no other suitable habitat in the vicinity of Carson City in 1997.

Because of habitat destruction, degradation, and fragmentation, the Carson wandering skipper has probably been extirpated from the Carson City site.

Washoe County Site

The nectar site in Washoe County occurs on Bureau of Land Management (BLM) administered lands and adjacent private lands. This nectar site is estimated to be about 10 to 12 ha (25 to 30 ac), with approximately half of the site occurring on BLM lands and half on private lands (Brussard *et al.* 1999). The nectar source at this site (racemose golden-weed) is abundant, as is salt grass. A few Carson wandering skippers were seen approximately 1.6 km (1 mi) northeast of the nectar site. This suggests the Carson wandering skipper may occur in small numbers elsewhere in adjacent areas (Brussard *et al.* 1999). Surveys were not conducted in 1999 or 2000 at this site. In 2001, searches of this area were made to confirm the Carson wandering skipper's presence. Five individuals were found at the nectar site on BLM lands; private lands were not searched (Virginia Rivers, Truckee Meadows Community College, pers. comm., 2001).

Lassen County Site

Two locations where the subspecies is found in Lassen County occur approximately 8 km (5 mi) apart. One location occurs on public lands managed by the California Department of Fish and Game (CDFG property). Another location is found on both private and public lands (private/public property). In 1998, two individuals were observed on the CDFG property, while several individuals were observed at a nectar site less than 2 ha (5 ac) in size on the private/public property. UNR did not conduct surveys at either of these locations in 1999. Surveys were conducted in 2000 and, while several individuals were seen on the private/public property nectar site location, none were seen on the CDFG property. Salt grass is abundant in the surrounding area of the private/public property but the attraction appears to be the nectar source, which is slender birds-foot trefoil. In 2001, searches were conducted to confirm the Carson wandering skipper's presence. A few sightings (three one day and four on another day) were observed on the private/public property nectar site, but again, none were observed on the CDFG property (V. Rivers, pers. comm., 2001).

Previous Federal Action

On May 22, 1984, we published an invertebrate wildlife Notice of Review in the **Federal Register** (49 FR 21664) designating *Pseudocopaeodes eunus eunus* as a category 2 candidate. Category 2 candidates were those species for which we had information indicating that listing may be appropriate, but for which additional information was needed to support the preparation of a proposed rule. The entity now known as the Carson wandering skipper was included in *P. e. eunus;* however, in early 1995, we were informed by Mr. George Austin that the Carson wandering skipper was a distinct, undescribed subspecies (G. Austin, pers. comm., 1995). In the February 28, 1996, Notice of Review (61 FR 7596), we discontinued the use of multiple candidate categories and considered the former category 1 candidates as simply ''candidates'' for listing purposes. The Carson wandering

skipper was removed from the candidate list at that time.

Following an updated assessment of the status of the Carson wandering skipper and its vulnerability to threats in 1998, we included this taxon as a candidate species in the Notice of Review published in the **Federal Register** on October 25, 1999 (64 FR 57533), with a listing priority number of 12.

A petition dated November 9, 2000, from Mr. Scott Hoffman Black, Executive Director, The Xerces Society, and received by the Service on November 10, 2000, requested that we emergency list the Carson wandering skipper as an endangered species throughout its range, and designate critical habitat concurrent with the listing. We responded in a letter dated February 20, 2001, that we would not publish a petition finding for the Carson wandering skipper because it was already listed as a candidate species in the most recent Notice of Review (64 FR 57533). This meant that we had already determined that listing was warranted for the species. We indicated we would continue to monitor the status of the Carson wandering skipper, and if an emergency listing was warranted, we would act accordingly, or list the subspecies when the action was not precluded by higher priorities.

In addition, the petitioner had also requested emergency listing of the entire species. We responded in our February 20, 2001, letter to the petitioner that we did not believe that an emergency situation existed at the time for the remaining subspecies. Surveys for *Pseudocopaeodes eunus* spp. were conducted in 1998 throughout potential, suitable habitat in Nevada and California (Brussard *et al.* 1999). Of the 78 sites (48 new; 30 historic) visited, *P. eunus* spp. were found at 14 sites. Of the 30 historic sites, *P. eunus* spp. were found at 8 sites. Seven areas (2 in Nevada; 5 in California) which were historic sites for these subspecies were not visited. We contracted with UNR to have additional status surveys conducted in 2001 for these other subspecies of *P. eunus*, and results of these surveys are pending. These surveys will assist in determining their status, and if we find that a listing of the remaining subspecies is warranted, we will act accordingly.

On August 28, 2001, we reached an agreement with the Center for Biological Diversity, California Native Plant Society, Southern Appalachian Biodiversity Project, and Foundation for Global Sustainability to complete work on a number of species proposed for listing. Under this ''miniglobal'' agreement, we agreed to issue several final listing decisions, propose a number of other species for listing, and review three species for emergency listing, including the Carson wandering skipper (*Center for Biological Diversity, et al.* v. *Norton*, Civ. No. 01–2063 (JR) (D.D.C.), entered by the court on October 2, 2001).

The Carson wandering skipper was included in the October 30, 2001, candidate Notice of Review (66 FR 54808), but with a listing priority number change from a 12 to a 3. We made this change because we have been unsuccessful implementing actions outlined in a draft conservation plan for the subspecies and two additional threats appear imminent. These threats include: (1) A proposed water exportation project in the vicinity of the Washoe County site that is a potential threat to the subspecies and its habitat; and (2) tall whitetop (*Lepidium latifolium*), a nonnative invasive plant, becoming established at the Lassen County site and is a threat to the subspecies' nectar source.

On November 29, 2001, we issued an emergency rule listing the Carson wandering skipper as an endangered species because we found that a number of threats constituted immediate and significant risk to the subspecies (66 FR 59537). A proposed rule to list the Carson wandering skipper was published in the **Federal Register** concurrently with the emergency rule (66 FR 59550). The proposed rule opened a 60-day comment period which closed on January 28, 2002.

On May 7, 2002, we reopened the public comment period to allow additional time for all interested parties to submit written comments on the proposal, and to give notice of a public informational meeting (67 FR 30645). The comment period was open for 30 days and closed June 6, 2002.

The Carson wandering skipper was included in the Candidate Notice of Review (67 FR 40657) published June 13, 2002.

Summary of Comments and Recommendations

In the November 29, 2001, proposed rule (66 FR 59550), we requested that all interested parties submit factual reports, information, and comments that might contribute to the development of the final listing decision. We contacted appropriate State and Federal agencies, county and city governments, scientific organizations and authorities, and other interested parties and requested them to comment. We published legal notices in the Nevada Appeal on December 16, the Lassen County Times on December 18, and the Reno Gazette Journal on December 19, 2001. Following the publication of the proposed rule, we received a total of 183 comments from individuals or organizations. We opened a second comment period on May 7, 2002 for 30 days to give the public additional time to comment (67 FR 30645). We also held a public informational meeting in Susanville, CA on May 22, 2002. We received an additional 248 comments during the second comment period, for a total of 431 comments. Of the comments received, 263 were in support of the listing action, 165 were opposed to the listing, and 3 were neutral. Comments providing additional information were incorporated where appropriate. We have addressed each of the substantive issues raised by commenters and grouped them into several issues that are discussed below.

Issue 1: A number of commenters were opposed to the listing stating there was a lack of information to support a listing of the Carson wandering skipper as endangered.

Our Response: Since its discovery in 1965, data collections of the Carson wandering skipper have been limited to surveys, literature review, and collection records. The best scientific and commercial data available indicate the subspecies occurs at only two known sites and has been extirpated from a third site.

Geographic Information System modeling was incorporated into the Brussard *et al.* (1999) study to identify potential habitats for surveying. All records of *P. eunus* from various sources were compiled. Habitat characteristics, based on the records as well as areas of salt desert scrub and low elevation sagebrush vegetation and water sources along eastern California and western Nevada, were mapped. A total of 78 sites, 30 historic sites and 48 potential new sites were surveyed for the Carson wandering skipper and the other subspecies to assist in determining the Carson wandering skipper's range. Twenty-two of these historic and potential sites were located in the northern areas within the potential range of the Carson wandering skipper. As a result of surveys, two new populations of the Carson wandering skipper were found. The Carson City historic population of Carson wandering skipper is believed extirpated. At this time, only two known populations are extant. All of the surveys were conducted by qualified field biologists during the proper time of year and time of day when the Carson wandering skipper could reasonably be expected to be active, evident, and identifiable.

We have prepared a survey protocol to determine habitat suitability and presence or absence of the Carson wandering skipper, and to provide consistency among surveyors. This protocol is currently being used by consultants reviewing various current and proposed projects during the 2002 survey season. We will evaluate the appropriateness of the protocol for accuracy, usefulness of data, and implementation, and the protocol will be revised as needed. Additional monitoring of occupied sites will be needed to determine population sizes and trends in the future.

Surveys to estimate population size of the Carson wandering skipper have not been conducted. We recognize that population estimates refine our understanding of the status of the subspecies. However, the abundance of insect species can fluctuate greatly from year to year. Some insects may be abundant in localized populations yet susceptible to extirpation by a single event. Therefore, estimates of abundance are not necessarily adequate to determine whether a species is threatened or endangered. We based our determination to list the Carson wandering skipper on evaluation of the current and future threats from the five factors listed in section 4 (a) of the Act.

We acknowledge that undiscovered sites occupied by the Carson wandering skipper may exist and appreciate comments mentioning other areas where the Carson wandering skipper and suitable habitat may occur. However, until the existence of additional populations can be verified and threats, if any, can be determined in these areas, we consider the Carson wandering skipper an endangered species.

Issue 2: Some commenters were opposed to the listing of the Carson wandering skipper because they believed it would cause negative economic impact to the agricultural community.

Our Response: Under section 4 (b)(1)(A) of the Act, a listing determination must be based solely on the best scientific and commercial date available. The legislative history of this provision states the intent of Congress is to ensure that listing decisions are ''based solely on biological criteria and to prevent non-biological considerations from affecting these decisions,'' H.R. Rep. No. 97–835, 97th Cong., 2nd Sess. 19 (1982). The legislative history also provides that, ''applying economic criteria * * * to any phase of the species listing process is applying economics to the determinations made under section 4 of the Act and is specifically rejected by the inclusion of the word ''solely'' in the legislation,'' H.R. Rep. No. 97–835, 97th Cong. 2nd Sess. 19 (1982). Therefore, we are precluded from considering economic impacts in a final decision to list a species.

Issue 3: Other commenters stated that grazing was not a threat to the Carson wandering skipper. Many held this position based on the fact that the extirpation of a population of Carson wandering skipper occurred because of urban and residential development rather than agricultural land use. Many stated that grazing was not a threat to the Carson wandering skipper because salt grass was resistant to grazing and trampling by livestock. Others stated grazing is beneficial to butterflies. In addition, the nectar source, slender birds-foot trefoil, was introduced by farmers and ranchers in the area for pasture production, and the Carson wandering skipper has been utilizing this plant as a nectar source and is successful because of it.

Our Response: While the recently extirpated Carson wandering skipper population in Carson City was in an urban setting, the rural landscape in Nevada and California has also been altered over time. Grazing occurs at both known sites. Livestock grazing can impact: (1) Species composition of communities by decreasing the density and biomass of species, reducing species richness, and changing community organization; (2) ecosystem function including the disruption of nutrient cycling and succession; and (3) ecosystem structure including altering vegetation stratification, contributing to soil erosion and reducing the availability of water to biotic communities (Fleischner 1994). Hutchinson and King (1980) found abundance and biomass of invertebrates (including butterflies (Lepidoptera)) were reduced (with the exception of ants (Hymenoptera)) with increases in sheep numbers. Excessive grazing that reduces the availability of salt grass for Carson wandering skipper larvae and availability of nectar sources for the adults is considered a threat.

We recognize that different grazing intensities and management practices can impact areas differently, and impacts at each site must be evaluated independently. However, we have identified grazing as a threat to several butterfly species that have been listed under the Act (*e.g.*, Uncompahgre fritillary butterfly (*Boloria acrocnema*) (56 FR 28712); Myrtle's silverspot butterfly (*Speyeria zerene myrtleae*) (57 FR 27858); Quino checkerspot butterfly (*Euphydryas editha quino*) (62 FR 2322); Callippe silverspot butterfly (*Speyeria callippe callippe*) and Behren's silverspot butterfly (*Speyeria zerene behrensii*) (62 FR 64320)). Grazing occurs at both of the known nectar sites. While we do not know the level or intensity of grazing at these sites, and acknowledge that specific impacts at these sites must be evaluated, we identified a concern that excessive grazing can threaten the species when it reduces the availability of salt grass for the larvae or nectar sources for the adults, or results in the trampling of the larvae. We recognize that grazing, at an appropriate level and season, may be compatible with the conservation of the skipper at these sites. However, such appropriate levels are not known at this time and must be assessed during the recovery process.

As noted by several commenters, salt grass is known to be resistant to grazing and trampling (Crampton 1974; Nebraska Cooperative Extension Service 1985). However, this does not mean that livestock will not graze or trample the salt grass. The term ''resistant'' means that salt grass is not killed by grazing or trampling and recovers well. Our concerns with impacts from grazing and trampling of salt grass to the Carson wandering skipper relate to the availability of food for the larvae, and the direct trampling of the larvae which are feeding on the salt grass, not impacts to salt grass itself.

As stated by commenters, slender birds-foot trefoil, a nonnative, has been planted in agricultural lands as a forage for cattle and has been utilized by the Carson wandering skipper. The presence of a nectar source is not the only factor influencing the occurrence of Carson wandering skippers. The nectar source location in relation to salt grass is also important and it may be too far from emerging adults to be utilized. Butterflies, in general, are less selective with regard to their nectar sources than they are about their larval host plants (Brussard *et al.* 1999). Flowers that are the proper size for the butterfly's proboscis (mouthparts) and that produce a sugar concentration of 15 to 25 percent are likely to be utilized (Kingsolver and Daniel 1979). As a result, nectar sources for a particular species can vary by locality and by season (Brussard *et al.* 1999). While the Carson wandering skipper has been observed nectaring on slender birds-foot trefoil, other plants in the area may offer additional nectar sources as well. If cattle are foraging on slender birds-foot trefoil during the adult flight period, the availability of slender birds-foot trefoil as a nectar source may be reduced. Given these considerations and the Carson wandering skipper's rarity,

grazing and trampling by livestock can significantly impact the subspecies and should be assessed in the recovery process.

Issue 4: Four commenters preferred that a collaborative conservation approach occur between the Service and local entities and individuals rather than a listing of the Carson wandering skipper under the Act. They suggested that listing the Carson wandering skipper would inhibit efforts to maintain and restore Carson wandering skipper habitat and likely prevent access to private lands. They proposed development of a process which would be ''more informal, less restrictive'' than what could occur under the Act.

Our Response: We strongly support the concept of utilizing a collaborative conservation effort to address the threats to species such that the need to list them is precluded. However, given the time needed to complete such an effort and the lack of protective measures afforded by the Act during the process, this type of approach is not well suited for species which are imminently threatened with extinction. We worked with agencies in Nevada and California, and a landowner in Nevada, and a draft conservation plan for the subspecies was developed in 2000. However, we were unable to obtain the information and commitment necessary to reduce or eliminate the threats to the Nevada and California populations. Given the immediate and significant threats to the Carson wandering skipper, we believe listing is necessary to put into effect the various conservation provisions in the Act including, but not limited to, interagency consultation, recovery planning, and take prohibitions as well as cooperative efforts with each State. We look forward to working with Federal, State, county, and private entities in development of a recovery plan to address the conservation needs of the Carson wandering skipper.

Issue 5: Three commenters stated that they believed that the emergency and proposed listing of the Carson wandering skipper was solely the result of the ''miniglobal'' lawsuit agreement and not science.

Our Response: As stated earlier, our ''miniglobal'' agreement provided we would review the status of the Carson wandering skipper to determine if emergency listing was appropriate. Based on our review of the available information, we believed emergency listing of the Carson wandering skipper was appropriate and adding it to the list of threatened and endangered species as endangered is also appropriate at this time.

Issue 6: Two commenters suggested that the Service list the Carson wandering skipper as threatened rather than endangered because this would enable the Service to protect the subspecies from urban pressures.

Our Response: We make a determination as to whether a species is threatened or endangered based on the magnitude of threats and the imminency of extinction. The term ''endangered'' is defined according to section 3(6) of the Act as ''* * * any species which is in danger of extinction throughout all or a significant portion of its range * * *''. A ''threatened species'' is defined as ''* * * any species which is likely to become an endangered species within the foreseeable future throughout all or a significant portion of its range.''

Threats to this subspecies include habitat destruction, degradation, and fragmentation due to urban and residential development, wetland habitat modification, agricultural practices (such as excessive livestock grazing), gas and geothermal development, nonnative plant invasion, collecting, livestock trampling, water exportation/importation projects, road construction, recreation, pesticide drift, and inadequate regulatory mechanisms. Given that only two populations are known to exist, we find these threats constitute immediate and significant threats to the Carson wandering skipper. Based on the available information, we believe that endangered status is appropriate for the Carson wandering skipper.

Issue 7: Two commenters thought that groundwater exportation was not a threat to the Lassen County Carson wandering skipper population because Lassen County restricts transfer of groundwater out of the County under the 1999 Lassen County General Plan.

Our Response: The potential water development project that could impact the Lassen County population involves exportation of water from the Honey Lake Valley which is located in both Lassen County, California and Washoe County, Nevada. It is our understanding that the extraction would occur in the Washoe County portion of the Honey Lake Valley. While Lassen County may not support exportation of surface or ground waters from aquifers located in Lassen County, it is unclear, after review of the Lassen County General Plan Ordinance No. 539 (Andy Whiteman, Lassen County Board of Supervisors, in litt., 2002), how it could prevent actions taken by Washoe County, Nevada.

Issue 8: Two commenters stated that the Service has potentially extended its jurisdiction unlawfully by listing habitat modification under the heading of activities that we believe could potentially result in a violation of section 9, ''without identifying an actual Carson wandering skipper specimen that has been taken.'' The commenters expressed the opinion that a direct impact is necessary before take has occurred.

Our Response: We have not extended our jurisdiction under section 9 of the Act. As stated in the listing, it is our policy (59 FR 34272) to identify, to the maximum extent practicable, those activities that we believe may or may not constitute a violation of section 9 of the Act. The intent of this policy is to increase public awareness of the effects of the listing on proposed and ongoing activities within the species' range.

With regard to take, under the Act Federal agencies must address both indirect and direct impacts of activities they authorize, fund, or carry out, that may impact listed species and consult with us under section 7 of the Act. Also, under the Act, private entities must address indirect and direct impacts of activities that result in take of a listed species in order to be issued a permit exception from us for activities that incidentally take listed species but are otherwise lawful. This process occurs under section 10 of the Act and is separate from a listing action which is addressed in section 4 of the Act.

Issue 9: One commenter questioned whether urban development was a threat to the Lassen County Carson wandering skipper population because the area was zoned for agriculture and limited development pressure was occurring.

Our Response: Limited urban or residential development is occurring at both known sites. One example of development is the construction of the Federal Correctional Institution (Institution) in the vicinity of the Lassen County site. Not only can the construction of buildings and infrastructure impact Carson wandering skipper habitat directly, the withdrawal of water for home and business needs could impact groundwater resources. If the water table is lowered, and changes the salt grass community, the Carson wandering skipper may be impacted.

The Lassen County General Plan policies related to zoning (Policies AG–4, AG–8) (A. Whiteman, in litt., 2002), do not prohibit development in the area. Policy AG–4 supports agricultural uses and does not allow isolated subdivision in non-designated areas, but does allow for exceptions. Policy AG–8 recognizes that agricultural areas may be evaluated for alternative uses. Agricultural lands can be converted with adequate

justification and consideration of related policies. Again, exceptions may occur. It is unclear whether the Carson wandering skipper site located partially on private land would be considered a ''significant wild habitat'' by Lassen County. Therefore, it is unclear whether or not it would be taken into consideration prior to possible conversion from agricultural lands to an alternate land use. The Lassen County General Plan also does not address the potential indirect effects of development (A. Whiteman, in litt., 2002).

Issue 10: One commenter questioned whether tall whitetop was a threat to Carson wandering skipper habitat because there was no scientific evidence to support it. However, the commenter did also state that tall whitetop ''* * * infestations most likely have a negative impact on salt grass and bird's-foot trefoil density.''

Our Response: While it is correct that a study specific to the impacts of tall whitetop invasion at a Carson wandering skipper nectar site has not been conducted, tall whitetop is a threat to other native species. Tall whitetop is an aggressive invader that displaces other vegetation and can form monotypic stands (an area comprised of one species), decreasing biodiversity, and degrading wildlife habitat as well as reducing the value of agricultural lands (Young *et al.* 1995; Donaldson and Johnson 1999; Krueger and Sheley 1999; Howard 2000). The species is known to grow in alkaline soils (Hickman 1993; Young *et al.* 1995; Howard 2000) but is not restricted to them. Tall whitetop can invade disturbed and undisturbed sites including roadsides, agricultural fields, pastures, riparian areas, alkaline wetlands, natural areas, and irrigation canals (Donaldson and Johnson 1999; Howard 2000). It has become widely established in Lassen County and is found in Honey Lake Valley, California (Howard 2000). We are concerned that tall whitetop will displace the Carson wandering skipper's nectar source at the Lassen County site. We are also concerned that tall whitetop may displace salt grass, the Carson wandering skipper's larval host plant. According to Young *et al.* (1998), infestation areas, once well established, rarely contain other plant species. Tall whitetop appears to have increased at this nectar site compared to 2001 (V. Rivers, pers. comm., 2002).

We support efforts to control tall whitetop in Lassen County and elsewhere in Nevada and California. However, where the Carson wandering skipper is found, consideration must be given to any impacts of control methods. Appropriate methods must be selected, so that the Carson wandering skipper (or other sensitive wildlife, plants, or habitats) can be protected at the same time tall whitetop is controlled.

Issue 11: One commenter stated that pesticide use was not a threat because Carson wandering skippers still occur adjacent to an alfalfa field, and farmers have to pass a safety test prior to applying pesticides.

Our Response: We have indicated that the use of pesticides adjacent to the Carson wandering skipper population in question could be a potential threat if pesticide drift occurred because of the proximity of the agricultural fields to the species' habitat. We do not know what precautions, if any, are being taken at this time to prevent any impact.

Issue 12: One reviewer thought the Service should consider listing the entire species as endangered.

Our Response: As indicated earlier in this rule, a petitioner requested emergency listing of the entire species on November 9, 2000. In our February 20, 2001, response, we indicated we did not believe that an emergency situation existed at that time. Additional status surveys were conducted in 2001 for the remaining subspecies. The results of these surveys are pending, but they should assist us in determining the status of the additional subspecies and determining any threats to them. If our ongoing status review indicates a listing is warranted, we will act accordingly.

Issue 13: One commenter did not think critical habitat should be designated because the Carson wandering skipper has occurred in very small numbers within a few kilometers/miles of the known nectar sites and may exist at low numbers over large areas. Its ecology suggests that areas of relatively high population density may shift among sites within the salt grass community based on changes in climatic, hydrographic, and geothermal conditions. Accurately designating critical habitat will be difficult because either large areas of unoccupied habitat would need to be designated, or if small patches of habitat were designated, changing environmental conditions could result in these areas being uninhabited at a later date.

Our Response: Because information about the specific biological needs of the Carson wandering skipper is currently limited, we are not able to adequately perform critical habitat designation analysis at this time, and find that critical habitat for the species is not determinable. In the proposed rule, we specifically solicited information on potential critical habitat, biological information, and information that would aid our prudency analysis. We received no comments regarding specific physical or biological features essential for the Carson wandering skipper which provided information that added to our ability to determine critical habitat. When we find that critical habitat is not determinable, we have two years from the publication date of the original proposed rule to designate critical habitat, unless the designation is found to be not prudent.

Issue 14: One commenter noted that the description of the Carson wandering skipper by Austin and Emmel (1998) suggests that, infrequently, other subspecies of *Pseudocopaeodes eunus* approach the coloration of *P. e. obscurus.* Therefore, the commenter questioned the appropriateness of this subspecies. The commenter was also concerned that the designation ''ssp.'' had not been included in the scientific name for the Carson wandering skipper indicating that a subspecies was being discussed.

Our Response: It is correct that Austin and Emmel (1998) indicated, as mentioned above, that infrequently, specimens from other populations approach the less heavily marked extremes of the Carson wandering skipper. These specimens do not, however, give the impression of an insect with a dark ventral hindwing, and they lack the dark apex on the ventral forewing. The Carson wandering skipper has been described by recognized authorities in a peer reviewed publication.

We do not use ''ssp.'' to denote an animal subspecies, only plant subspecies. The absence of its use in animal scientific names does not indicate uncertainty in its taxonomic definition.

Issue 15: One commenter was concerned with the lack of information provided regarding habitat requirements for the Carson wandering skipper. It was suggested that, because soils are effective in discriminating environmental units, soil survey maps be utilized to delineate habitat for the Carson wandering skipper.

Our Response: We agree that additional information regarding Carson wandering skipper's habitat requirements would be useful. However, under the Act, the absence of more details regarding habitat requirements for a species or subspecies does not prevent the listing of the taxon. Habitat requirements for butterflies are primarily defined by its larval host plant, in this case, salt grass. While soils can be an effective means of indicating vegetation communities, salt grass has been observed in many soil types.

Researchers did review soil survey maps during the Carson wandering skipper surveys of 1998; however, salt grass did not appear to follow soil survey boundaries and as a result, they were not particularly helpful (P. Brussard, pers. comm., 2002b).

Issue 16: One commenter stated that when the Endangered Species Act was originally passed it ''* * * did not contemplate the extinction of creatures of the phylum Insecta; it was aimed at the protection of vertebrate species.''

Our Response: When the Endangered Species Act was passed in 1973, it provided for protection of insects and other invertebrate species. At the time of its passage, definitions for the purposes of the Act were found in section 3(5) which stated: ''The term 'fish or wildlife' means any member of the animal kingdom, including without limitation any mammal, fish, bird (including any migratory, nonmigratory, or endangered bird for which protection is also afforded by treaty or other international agreement), amphibian, reptile, mollusk, crustacean, arthropod or other invertebrate, and includes any part, product, egg, or offspring thereof, or the dead body or parts thereof.'' Several amendments to the Act have since occurred, and this definition can be found today in section 3(8) of the Act.

Issue 17: One commenter asked what information would be necessary for delisting of the Carson wandering skipper.

Our Response: The listing of a species is based on the best scientific and commercial data available at the time of listing as it relates to addressing the five listing factors defined under section 4 (a)(1) of the Act. Section 4 regulations (50 CFR 424.11(c–f)) provide guidance regarding the applicable criteria for delisting and reclassifying species. Delisting of a species can occur if: (1) The species is extinct or has been extirpated from its previous range; (2) the species has recovered and is no longer endangered or threatened; or (3) investigations show that the best scientific or commercial data available when the species was listed or the interpretations of such data were in error. The requirements for listing and delisting are different in that the information necessary to resolve the threats and recover the species need not be known at the time of listing. Specific recovery criteria, which define when a species may be downlisted or delisted, are developed for each species during the recovery planning process and are published in the recovery plan for the species.

Issue 18: One commenter repeated a comment the Service made that the Carson wandering skipper is rare in and of itself. The commenter states that ''rare does not mean endangered''.

Our Response: The commenter is correct. Just because a species is rare does not mean it should automatically be listed under the Act. However, if a rare species is determined to be threatened or endangered based on the listing factors in section 4 (a)(1) of the Act using the best scientific and commercial data available, it should be considered for listing.

Issue 19: One commenter stated that there had been insufficient time to gather information, research it, and comment on it by the public.

Our Response: A 60-day comment period was opened when the proposed rule was published. An additional 30-day comment was opened to provide opportunity for further public input. In addition, a public informational meeting was held to answer questions regarding the species and the proposed rule. We believe that the 60-day and 30-day comment periods and the informational meeting provided adequate opportunity for the public to gather available information and comment on the proposed listing.

Peer Review

In accordance with our policy published on July 1, 1994 (59 FR 34270), we have sought the expert opinions of four appropriate and independent specialists regarding our proposal to list the Carson wandering skipper. The purpose of these reviews is to ensure that listing decisions are based on scientifically sound data, assumptions, and analyses. We sent the peer reviewers copies of the emergency and proposed rules immediately following their publication in the **Federal Register**. Three of the four reviewers returned comments during the comment period. Two of the three reviewers supported our assumptions and conclusions as well as our decision to list the Carson wandering skipper as endangered, while a third reviewer was neutral in his opinion of our proposed action. We have incorporated their comments into this final determination.

Summary of Factors Affecting the Species

Section 4 of the Act and regulations (50 CFR part 424) promulgated to implement the listing provisions of the Act (16 U.S.C. 1531 *et seq.*) set forth the procedures for adding species to the Federal lists. We may determine a species to be endangered or threatened due to one or more of the five factors described in section 4(a)(1). These factors and their application to the Carson wandering skipper are as follows:

A. The Present or Threatened Destruction, Modification, or Curtailment of Its Habitat or Range

The primary cause of the decline of the Carson wandering skipper is loss of salt grass, nectar sources, and wetland habitats from human activities. Threats include habitat fragmentation, degradation, and loss due to urban and residential development, wetland habitat modification, agricultural practices (such as excessive livestock grazing), nonnative plant invasion, gas and geothermal development, road construction, water exportation projects with their subsequent change in water table levels and plant composition, and recreation. Threats at each known or historic site are discussed below.

Carson City Site

Habitat at the original Carson City site has been greatly modified over time, and most of it was destroyed by construction of a shopping center (Brussard *et al.* 1999). Several years later, an extension of this population was discovered north of the original location (Brussard *et al.* 1999). The current site includes about 10 ha (24.7 ac) of known and potential Carson wandering skipper habitat (P. Frost, *in litt.,* 1998). Collections were made at this site from the late 1960s through the early 1990s, although population numbers were small (Austin and Emmel 1998; Brussard *et al.* 1999). In the 1990s, additional urban development further reduced the remaining habitat, and the site is now completely surrounded by development. Adult Carson wandering skippers have not been observed at this location since 1997.

The Carson wandering skipper has likely been extirpated from the Carson City site due to development and habitat changes resulting from drainage manipulations for residential and commercial development (Brussard *et al.* 1999). Adjacent lands surrounding this site will continue to be developed for commercial and residential use.

The remaining habitat at the type locality will also be fragmented or destroyed by construction of a freeway bypass and associated flood control facilities being planned by the Nevada Department of Transportation (NDOT). The bypass was approved and the right-of-way corridor was purchased several years ago. At the time, this was the only known site occupied by the Carson wandering skipper. The only suitable nectar source available during the

Carson wandering skipper's flight season at this site was the native mustard, *Thelypodium crispum* (Brussard *et al.* 1999). Construction of the bypass began in 2000 and impacts to Carson wandering skipper habitat will likely occur in 2002 (Julie Ervin-Holoubek, NDOT, pers. comm., 2001). The alignment will impact approximately 2.4 ha (6 ac) of previously occupied habitat, and about 8 ha (20 ac) of the potential habitat remaining at both areas north and south of U.S. 50 (P. Frost, *in litt.,* 1998). According to Brussard (2000), this will leave inadequate habitat to support a restored population.

Habitat loss and modifications of the Carson City site have also occurred due to the construction of a wetland mitigation area in the early 1990s to mitigate for wetlands lost approximately 0.8 km (0.5 mi) southwest of this site. The U.S. Army Corps of Engineers (Corps) issued a section 404 permit on March 10, 1993, for a residential housing and golf course project, impacting about 2 ha (5 ac) of wetlands. Mitigation for these impacts involved the creation of 9 ha (22 ac) of intermittent, seasonal, and semi-permanent wetlands adjacent to the existing wetlands (Robert W. Junell, Corps, *in litt.,* to Charles L. Macquarie, Lumos and Associates, Inc. 1993; Lumos and Associates, Inc. 1993). To date, this mitigation site has not met its objectives to provide high-value urban wetlands and enhance wetland function (Nancy Kang, Corps, *in litt.,* to Dwight Millard, J.F. Bawden and Stanton Park Development 2001).

In addition, this site is used for recreation by walkers and mountain and dirt bikers in the remaining open area.

Washoe County Site

Threats at the Washoe County site include excessive livestock grazing and trampling, residential development, increased potential recreational use, such as off-road vehicles (ORV), a proposed water exportation project, and potential impacts associated with pesticide drift.

Recent grazing practices on BLM-administered lands at the Washoe County site allowed for a November to March grazing season. Although this season of use avoided impacts to adult Carson wandering skipper nectar sources and impacts to eggs, larvae, and pupae during the spring and summer, high livestock densities can cause larval mortality by trampling larvae that hibernate during the winter in salt grass. On adjacent private lands, cattle densities and season of use are not regulated, and cattle have access to areas occupied by nectar sources during the Carson wandering skipper flight season. Livestock can trample the salt grass and nectar sources and also cause direct mortality of eggs, pupae, or feeding larvae. While the level of grazing on salt grass has not been measured at this site, cattle readily utilize this dominant forage species (Walt Devaurs, BLM, pers. comm., 2001), possibly competing with larval needs.

An assessment of the springs located on the BLM portion of this site occurred in 2001 (Daniel Jacquet, BLM, *in litt.,* 2002). Cattle use of this area resulted in the springs being determined ''Functional at Risk'' and ''Non-functional,'' indicating that the springs were not in good condition. As a result of this determination, livestock grazing will be excluded from this area for 3 years or through the 2005 growing season to rehabilitate the area. This exclusion should improve the abundance and quality of nectar sources and salt grass habitat for the Carson wandering skipper. Grazing may be allowed after this 3-year period if it is determined that improvement to the springs has occurred. While long-term monitoring data of salt grass are lacking, transects established in March 2002, indicate overall utilization was in the ''heavy to severe range.'' BLM will monitor the site annually for the 3-year period for improvement in growth of vegetation.

Residential development is occurring in the area surrounding the Washoe County site. Increases in domestic wells could impact the water table in the area, resulting in changes to the salt grass community. As this area becomes more populated, fragmentation and degradation of the Carson wandering skipper's habitat is expected to increase through development and recreational activities such as ORV use. Also, use of public lands for recreation will likely increase as the area becomes more developed.

The Nevada State Engineer's Office approved change-in-use applications (agricultural to municipal and industrial use) (Hugh Ricci, Nevada Department of Conservation and Natural Resources, Division of Water Resources, *in litt.,* 2001) for a private landowner plan to export water from this valley and import it to a neighboring valley. This project will involve the collection of up to 358 hectare-meters (ha-m) (2,900 acre-feet (ac-ft)) per year of surface and ground water through a system of ditches, natural channels, diversion structures, collection facilities, and recovery wells. The recovered water will be treated and exported via pipeline to the neighboring valley (Stantec Consulting, Inc. 2000). Implementation of this project, or a similar one, could result in the lowering of the water table in the valley and result in adverse changes to the salt grass community upon which the Carson wandering skipper at this site depends. In addition, the construction of facilities could result in direct impacts to Carson wandering skipper habitat.

Another potential threat is pesticide drift from alfalfa fields located near to the occupied nectar site. Pesticides are used to control pests such as aphids, cutworms, grasshoppers, and mites (Carpenter *et al.* 1998.). Pesticide drift from these fields to the nectar site could eliminate a large part of the Carson wandering skipper population (Brussard 2000).

Lassen County Site

Threats at the Lassen County site include the invasion of the nonnative plant species tall whitetop, proposed gas and geothermal development, urban development, and the potential for excessive livestock grazing and trampling. A water development project, which could affect the ground water table, is also of concern.

Tall whitetop, which was first noted in 2000, has encroached onto the nectar site on the public/private property and has become established in patches of slender birds-foot trefoil, this site's nectar source. Tall whitetop is a perennial native to Europe and Asia which grows in disturbed sites, wet areas, ditches, roadsides, and cropland. Spreading roots and numerous seeds make this plant difficult to control (Stoddard *et al.* 1996). No further advancement of tall whitetop into the nectar site was observed during visits in 2001 (V. Rivers, pers. comm., 2001), but it appears to have spread in 2002 (V. Rivers, pers. comm., 2002). The surrounding countryside, including both public and private lands, is infested (Howard 2000). Failure to control this invasive species could quickly result in the loss of this small nectar source and the immediate salt grass area (Young *et al.* 1998). Depending on the control methods used (herbicide treatments or mechanical means) and timing, efforts to control this plant species could also impact the Carson wandering skipper population and its habitat at this site. To date, the Carson wandering skipper has not been observed nectaring on tall whitetop.

A permit for proposed gas and geothermal development has been recently extended by the Lassen County Planning Commission (Albaugh 2002). The permit allows exploratory drilling

for 14 hydrocarbon wells and one geothermal water test well near the occupied site. The Carson wandering skipper has been associated with geothermal areas and the resulting ground and hydrologic disturbances caused by the exploratory drilling may impact the subspecies and its habitat.

Construction of the Federal Correctional Institution, and its associated water supply and wastewater treatment facilities for the Institution and adjacent community, could impact Carson wandering skipper habitat. The increased water needs (approximately 757 million liters (200 million gallons) per year) (The Louis Berger Group, Inc. 2002) for the project could impact Carson wandering skipper habitat if the ground water table is lowered and salt grass habitat is negatively affected. The Federal Bureau of Prisons is currently consulting with us on the potential impacts of this project to the Carson wandering skipper.

Cattle have access to the Lassen County site at the private/public lands location, however, it is unknown at this time what type of management is being implemented. Like the Washoe County site, season of use and densities of livestock can affect the availability of nectar sources for adults and salt grass for larvae. Trampling of larvae is also possible. In addition, the small size of this site makes it more susceptible to adverse impacts.

Additional potential threats include attempts to export water from the area to other locations. In 1991, the Nevada State Engineer approved exportation of 1,604 ha-m (13,000 ac-ft) of groundwater per year from Honey Lake Valley, located in Lassen and Washoe counties to Lemmon and Spanish Springs Valleys, Washoe County. In 1993, a draft Bedell Flat Pipelines Rights-of-Way, Washoe County, Nevada Environmental Impact Statement was prepared (BLM 1993). Further work on the Bedell Flats Project by BLM was suspended by the Secretary of the Interior (Secretary) in 1994 due to concerns with groundwater modeling, groundwater contamination, and potential impacts to Pyramid Lake (Bruce Babbitt, U.S. Department of the Interior, *in litt.,* 1994). The project has since been modified by new water rights holders, and there are future plans, not yet approved, to potentially export 987 ha-m (8,000 ac-ft) of groundwater annually from Honey Lake Valley to the North Valleys (Donald Pattalock, Vidler Water Company, pers. comm., 2002). If this project, or a similar project, is implemented, lowering of the water table could occur and result in adverse changes to the salt grass community upon which the Carson wandering skipper depends.

B. Over-Utilization for Commercial, Recreational, Scientific, or Educational Purposes

Rare butterflies and moths are highly prized by collectors, and an international trade exists for insect specimens for both live and decorative markets, as well as the specialist trade that supplies hobbyists, collectors, and researchers (Morris *et al.* 1991; Williams 1996). The specialist trade differs from both the live and decorative market in that it concentrates on rare and threatened species (U.S. Department of Justice 1993). In general, the rarer the species, the more valuable it is, and prices may exceed US $2,000 for rare specimens (Morris *et al.* 1991).

Simply identifying a species as rare can result in an increase in commercial or scientific interest, both legal and illegal, which can threaten the species through unauthorized and uncontrolled collection for scientific and/or commercial purposes. Even limited collection from small populations can have adverse impacts on their viability.

While there have been no studies on the impact of the removal of individuals from natural populations of this subspecies, it is possible that the Carson wandering skipper has been adversely affected. At the Carson City site, individuals of the Carson wandering skipper are known to have been collected for personal butterfly collections during the late 1960s until the early 1990s, though populations were small (Austin and Emmel 1998; Brussard *et al.* 1999). From 1965 to 1989, at least 86 males and 90 females were collected during 7 different years by various collectors (Austin and Emmel 1998). During this time, this was the only known site at which Carson wandering skipper occurred. The Carson wandering skipper is now believed to have been extirpated from the site. While habitat degradation and loss have occurred at this site, collecting may have also contributed to this extirpation.

In 1998, the Carson wandering skipper was collected at the Washoe County and Lassen County sites by UNR researchers for genetic analysis. Only males were collected, and these were taken late in the flight season to minimize impacts to the population (Brussard *et al.* 1999).

The two known populations of Carson wandering skipper could face strong pressure from collectors. Since the nectar sites occur along public roadsides, the subspecies is easily accessible, and the limited number and distribution of these populations make this subspecies vulnerable to collectors. Even limited collection from the small populations of Carson wandering skipper could have deleterious effects on its viability and lead to the eventual extinction of this subspecies.

C. Disease or Predation

Disease is not known to be a factor affecting this subspecies at this time.

Predation by species, such as birds or insects, on eggs, larvae, pupae, or adult Carson wandering skippers is likely, but it is unknown how this may affect the population's viability.

D. The Inadequacy of Existing Regulatory Mechanisms

The Carson wandering skipper occurs on Federal, State, and private lands. Existing regulatory mechanisms do not fully protect this subspecies or its habitat on these lands. Existing regulatory mechanisms that may provide some protection for the Carson wandering skipper include: (1) Federal laws and regulations including the Clean Water Act (CWA); and (2) State laws including the California Environmental Quality Act (CEQA).

Federal Laws and Regulations

The Carson wandering skipper appears to be closely associated with wetland habitats. Current regulatory mechanisms, such as section 404 of the CWA, have not precluded development and alteration of these habitats. Section 404 regulations require that applicants obtain a permit from the Corps for projects that place fill material into waters of the United States. Whether an individual or nationwide permit may be required depends upon the activity and the amount of fill proposed. Regulatory mechanisms addressing alterations to stream channels, riparian areas, springs and seeps from various activities such as agricultural activities, development, and road construction have been inadequate to protect the Carson wandering skipper habitat in Nevada and California.

Some protection is afforded to the Carson wandering skipper on lands administered by the BLM at the Washoe County site due to their commitment to assist in the conservation of this subspecies through a Cooperative Agreement (CA) signed in 1999. This CA was signed by the Service, NDOT, the Federal Highway Administration (FHA), and BLM in October 1999. It was developed to outline the actions necessary for the conservation and management of the Carson wandering skipper. Development of a conservation plan was one activity outlined by the

CA. UNR was contracted by NDOT, and a draft plan was completed in 2000. Additional biological information and agency commitment are needed before this plan can be finalized. Since signing the CA in 1999, BLM has designated 98 ha (243 ac) of their lands at the Washoe County site as an Area of Critical Environmental Concern. This designation allows BLM discretion in determining actions which can occur within the area (BLM 2001). However, these protections only cover a portion of Carson wandering skipper habitat in the area and are insufficient to protect the subspecies throughout the site.

Publication of the emergency rule on November 29, 2001, provides protection for the Carson wandering skipper until July 29, 2002. Until publication of the emergency rule, we considered the Carson wandering skipper a candidate species; a candidate species designation carries no formal Federal protection under the Act.

State Laws and Regulations

Although California State laws may provide a measure of protection to the subspecies, these laws are not adequate to protect the Carson wandering skipper and ensure its long-term survival. CEQA pertains to projects on non-Federal lands and requires that a project proponent publicly disclose the potential environmental impacts of proposed projects. Section 15065 of the CEQA Guidelines requires a ''finding of significance'' if a project has the potential to ''reduce the number or restrict the range of a rare or endangered plant or animal'' including those that are eligible for listing under the California Endangered Species Act. However, under CEQA, where overriding social and economic considerations can be demonstrated, a project may proceed despite significant adverse impacts to a species.

The California Natural Diversity Data Base (CNDDB) classifies the Carson wandering skipper as a S1S3 species, which identifies this subspecies as one that is extremely endangered with a restricted range within California (CNDDB 2001). This designation provides no legal protection in California. The CDFG is unable to protect insects under its current regulations (Pete Bontadelli, CDFG, *in litt.,* 1990), since the California Endangered Species Act does not allow for the listing of insect species.

In Nevada, there are no local or State regulations protecting the Carson wandering skipper on State or non-Federal lands. The Nevada Natural Heritage Program ranks the Carson wandering skipper as S1, meaning it is considered critically imperiled in the State of Nevada due to extreme rarity, imminent threats, or biological factors (Nevada Natural Heritage Program 2000). This designation provides no legal protection in Nevada. The Nevada Division of Wildlife is unable to protect insects under its current regulations (Nevada Revised Statutes 1999).

E. Other Natural or Manmade Factors Affecting Its Continued Existence

The apparent low numbers of the Carson wandering skipper make it vulnerable to risks associated with small, restricted populations. The elements of risk that are amplified in very small populations include: (1) Random demographic effects (*e.g.,* skewed sex ratios, high death rates or low birth rates); (2) the effects of genetic drift (random fluctuations in gene frequencies) and inbreeding (mating among close relatives); and (3) deterioration in environmental quality (Gilpin and Soulé 1986). Genetic drift and inbreeding may lead to reductions in the ability of individuals to survive and reproduce (*i.e.,* reductions in fitness) in small populations. In addition, reduced genetic variation in small populations may make any species less able to adapt to future environmental changes. Also, having only two locations and restricted habitat makes the Carson wandering skipper susceptible to extinction or extirpation from all or a portion of its range due to random events such as fire, flood, or drought (Shaffer 1981, 1987; Primack 1998).

In addition, the loss of habitat compromises the ability of the Carson wandering skipper to disperse. Populations are isolated with no opportunity to migrate or recolonize if conditions become unfavorable.

A wetlands mitigation bank is being established near the Lassen County site. It is located adjacent to existing CDFG lands. This parcel of land has been recently grazed and farmed. The bank is intended to create a minimum of 37 ha (92 ac) of emergent wetlands at this site to mitigate for wetland losses in sagebrush scrub and juniper woodland habitats due to road construction in Lassen and Modoc counties and the eastern portion of Plumas County. This bank will be managed by CDFG (California Department of Transportation (CalTrans) and CDFG 1998). Depending upon the location of constructed wetlands, loss of potential Carson wandering skipper habitat could occur. CalTrans, representing the FHA, is currently consulting with us regarding potential impacts to the subspecies with regard to this wetland mitigation bank project.

We have carefully assessed the best scientific and commercial information available regarding the past, present, and future threats faced by the Carson wandering skipper in determining to make this rule final. We are concerned about the Carson wandering skipper because of the extremely small number of populations, habitat fragmentation, and significant decrease in its historical range in Nevada and California. This subspecies is threatened by the following factors: habitat destruction, degradation, and fragmentation due to urban and residential development, wetland habitat modification, agricultural uses (such as excessive livestock grazing), nonnative plant invasion, gas and geothermal development, road construction and recreation. Other threats include impacts from collecting, livestock trampling, pesticide drift, and inadequate regulatory mechanisms. Proposed water exportation projects pose an additional threat. These projects could severely impact Carson wandering skipper habitat by lowering the water table, and degrading or eliminating the salt grass community upon which the Carson wandering skipper depends.

This subspecies is also vulnerable to chance demographic, genetic, and environmental events, to which small populations are particularly vulnerable. The combination of only two populations, small range, and restricted habitat makes the subspecies highly susceptible to extinction or extirpation from a significant portion of its range due to random events such as fire, drought, disease, or other occurrences (Shaffer 1981, 1987; Meffe and Carroll 1994).

Because the Carson wandering skipper occurs at only two known locations, and because both locations are subject to various immediate, ongoing, and future threats as outlined above, we find that the Carson wandering skipper is in imminent danger of extinction throughout all or a significant portion of its range and, therefore, meets the Act's definition of endangered and warrants protection under the Act. Threatened status would not accurately reflect the diminished status and the threats to this subspecies.

Critical Habitat

Critical habitat is defined in section 3 of the Act as the— (i) specific areas within the geographical area occupied by a species, at the time it is listed in accordance with the Act, on which are found those physical or biological

features (I) essential to the conservation of the species, and (II) that may require special management considerations or protection, and (ii) specific areas outside the geographical area occupied by a species at the time it is listed in accordance with the provisions of section 4 of the Act, upon a determination by the Secretary that such areas are essential for the conservation of the species. ''Conservation'' means the use of all methods and procedures needed to bring the species to the point at which listing under the Act is no longer necessary.

Section 4(a)(3) of the Act, as amended, and implementing regulations (50 CFR 424.12) require that, to the maximum extent prudent and determinable, we designate critical habitat at the time the species is determined to be endangered or threatened. Our regulations (50 CFR 424.12(a)) state that critical habitat is not determinable if information sufficient to perform the required analysis of impacts of the designation is lacking, or if the biological needs of the species are not sufficiently well known to allow identification of an area as critical habitat. Section 4(b)(2) of the Act requires us to designate critical habitat on the basis of the best scientific data available after considering economic and other relevant impacts of designating a particular area as critical habitat. We may exclude any area from critical habitat if we determine that the benefits of such exclusion outweigh the conservation benefits, unless to do so would result in the extinction of the species.

We find that critical habitat is not determinable for the Carson wandering skipper. In the proposed rule, we specifically solicited information on potential critical habitat, biological information, and information that would aid our prudency analysis. We received no comments regarding specific physical or biological features essential for the Carson wandering skipper which provided information that added to our ability to determine critical habitat. In addition, the extent of habitat required for recovery of the Carson wandering skipper has not been identified. This information is considered essential for determining critical habitat. We are also concerned that the designation of critical habitat could increase the degree of threat to the subspecies through collecting or from intentional habitat degradation. Because information relevant to the specific biological needs of the Carson wandering skipper is not currently available, we are unable to adequately perform the analysis required to designate critical habitat and therefore, we find that critical habitat for the Carson wandering skipper is not determinable at this time. When a ''not determinable'' finding is made, we must, within 2 years of the publication date of the original proposed rule, designate critical habitat, unless the designation is found to be not prudent.

We will protect the Carson wandering skipper and its habitat through section 7 consultations to determine whether Federal actions are likely to jeopardize the continued existence of the subspecies, through the recovery process, through enforcement of take prohibitions under section 9 of the Act, and through the section 10 process for activities on non-Federal lands with no Federal nexus.

Available Conservation Measures

Conservation measures provided to species listed as endangered or threatened under the Act include recognition, development of recovery actions, requirements for Federal protection, and prohibitions against certain activities. Recognition through listing results in public awareness and encourages conservation actions by Federal, State, and local agencies, private organizations, and individuals. The Act provides for possible land acquisition and cooperation with the States, and requires that the Service carry out recovery actions for all listed species. The protection required of Federal agencies, and the prohibitions against certain activities involving listed species are discussed, in part, below.

Section 7(a) of the Act, as amended, requires Federal agencies to evaluate their actions with respect to any species that is proposed or listed as endangered or threatened, and with respect to its critical habitat, if any is being designated. Regulations implementing this interagency cooperation provision of the Act are codified at 50 CFR part 402. Section 7(a)(4) requires Federal agencies to confer with us on any action that is likely to jeopardize the continued existence of a species proposed for listing, or result in destruction or adverse modification of proposed critical habitat. If a species is listed subsequently, section 7(a)(2) requires Federal agencies to ensure that activities they authorize, fund, or carry out are not likely to jeopardize the continued existence of the species or destroy or adversely modify its critical habitat, if any has been designated. If a Federal action may affect a listed species or its critical habitat, the responsible Federal agency must enter into formal consultation with us.

Federal agencies whose actions may require consultation include, but are not limited to, the BLM, Corps, FHA, Natural Resources Conservation Service, U.S. Department of the Army, and the Federal Bureau of Prisons. Federal agencies with management responsibility for the Carson wandering skipper also include the Service, in relation to Partners for Fish and Wildlife projects and issuance of section 10(a)(1)(B) permits for habitat conservation plans, and other programs. Activities on BLM lands could include livestock grazing and associated management activities, sale, exchange, or lease of Federal land containing suitable habitat, recreational activities, or issuance of right-of-way permits for various projects across lands they administer. Occurrences of this subspecies could potentially be affected by projects requiring a permit from the Corps under section 404 of the CWA. The Corps is required to consult on permit applications they receive for projects that may affect listed species. Highway construction and maintenance projects that receive funding from the FHA would be subject to review under section 7 of the Act. Activities authorized under the Natural Resources Conservation Service's Emergency Watershed Protection program, such as fire rehabilitation projects, and activities authorized by the U.S. Department of the Army and the Federal Bureau of Prisons would also be subject to section 7 review. In addition, activities that are authorized, funded, or administered by Federal agencies on non-Federal lands will be subject to section 7 review.

We believe that protection and recovery of the Carson wandering skipper will require reduction of the threats from habitat destruction, degradation, and loss of salt grass and wetland habitats due to urban and residential development, agricultural practices (such as excessive livestock grazing), nonnative plant invasion, gas and geothermal development, and road construction. Threats from collection, livestock trampling, water exportation projects, pesticide drift, and recreation must also be reduced. These threats should be considered when management actions are taken in habitats currently and potentially occupied by the Carson wandering skipper, and areas deemed important for dispersal, and connectivity or corridors between known locations of this subspecies. Monitoring should also be undertaken for any management actions or scientific investigations designed to address these threats or their impacts.

Listing the Carson wandering skipper as endangered will provide for the

development of a recovery plan for the subspecies. Such a plan will bring together Federal, State, and regional agency efforts for conservation of the subspecies. A recovery plan will establish a framework for agencies to coordinate their recovery efforts. The plan will set recovery priorities, assign responsibilities, and estimate the costs of various tasks necessary to achieve conservation and survival of the subspecies. Additionally, pursuant to section 6 of the Act, we will be able to grant funds to the States of Nevada and California for management actions promoting the protection and recovery of this subspecies.

The Act and its implementing regulations set forth a series of general prohibitions and exceptions that apply to all endangered wildlife. All prohibitions of section 9(a)(2) of the Act, codified at 50 CFR 17.21, in part, make it illegal for any person subject to the jurisdiction of the United States to take (includes harass, harm, pursue, hunt, shoot, wound, kill, trap, capture, or collect; or attempt any such conduct), import or export, transport in interstate or foreign commerce in the course of commercial activity, or sell or offer for sale in interstate or foreign commerce any listed species. It is also illegal to possess, sell, deliver, carry, transport, or ship any such wildlife that has been taken illegally. Certain exceptions apply to our agents and State conservation agencies.

Permits may be issued to carry out otherwise prohibited activities involving endangered wildlife under certain circumstances. Regulations governing permits are codified at 50 CFR 17.22 and 17.23. Such permits are available for scientific purposes, to enhance the propagation or survival of the species, and for incidental take in connection with otherwise lawful activities.

It is our policy, published in the **Federal Register** on July 1, 1994 (59 FR 34272), to identify, to the maximum extent practicable, activities that would or would not constitute a violation of section 9 of the Act. The intent of this policy is to increase public awareness of the effects of the listing on proposed and ongoing activities within the subspecies' range. With respect to the Carson wandering skipper, based upon the best available information, we believe the following actions would not be likely to result in a violation of section 9, provided these activities are carried out in accordance with existing regulations and permit requirements:

(1) Possession, delivery, including interstate transport and import or export from the United States, involving no commercial activity, of dead Carson wandering skippers that were collected prior to the November 29, 2001 date of publication of the emergency listing rule in the **Federal Register**;

(2) Any actions that may result in take of the Carson wandering skipper that are authorized, funded or carried out by a Federal agency when the action is conducted in accordance with the consultation requirements for listed species pursuant to section 7 of the Act;

(3) Any action taken for scientific research carried out under a recovery permit issued by the Service pursuant to section 10(a)(1)(A) of the Act; and

(4) Land actions or management carried out under a habitat conservation plan approved by the Service pursuant to section 10(a)(1)(B) of the Act, or an approved conservation agreement.

Activities that we believe would potentially result in a violation of section 9 include, but are not limited to:

(1) Unauthorized possession, handling, or collecting of the Carson wandering skipper. Research efforts involving these activities will require a permit under section 10(a)(1)(A) of the Act;

(2) Possession, sale, delivery, carriage, transportation, or shipment of illegally taken Carson wandering skipper specimens;

(3) Activities authorized, funded, or carried out by Federal agencies that may result in take of the Carson wandering skipper when such activities are not conducted in accordance with the consultation requirements for listed species under section 7 of the Act; and

(4) Activities (*e.g.,* habitat conversion, urban and residential development, gas and geothermal exploration and development, excessive livestock grazing, farming, road and trail construction, water development, recreation, and unauthorized application of herbicides and pesticides in violation of label restrictions) that directly or indirectly result in the death or injury of adult Carson wandering skippers, or their pupae, larvae or eggs, or that modify Carson wandering skipper habitat and significantly affect their essential behavioral patterns including breeding, foraging, sheltering, or other life functions that result in death or physical injuries to skippers. Otherwise lawful activities that incidentally take Carson wandering skipper specimens, but have no Federal nexus, will require a permit under section 10(a)(1)(B) of the Act.

Questions regarding whether specific activities risk violating section 9 should be directed to the Field Supervisor of the Nevada Fish and Wildlife Office or the Field Supervisor of the Sacramento Fish and Wildlife Office (*see* **FOR FURTHER INFORMATION CONTACT** section). Requests for copies of the regulations on listed wildlife, and general inquiries regarding prohibitions and issuance of permits under the Act, may be addressed to the U.S. Fish and Wildlife Service, Ecological Services, Endangered Species Permits, 911 NE 11th Ave., Portland, OR 97232–4181 (telephone 503/231–2063; facsimile 503/231–6243).

Reasons for Effective Date

We published the emergency rule for this subspecies on November 29, 2001. The 240-day period expires on July 29, 2002. This final rule must be published on or before this date to prevent Federal protection for the Carson wandering skipper from expiring. Because of this, we find that good cause exists for this rule to take effect immediately upon publication in accordance with 5 U.S.C. 553(d)(3).

National Environmental Policy Act

We have determined that an environmental assessment and environmental impact statement, as defined under the authority of the National Environmental Policy Act of 1969, need not be prepared in connection with regulations adopted pursuant to section 4(a) of the Endangered Species Act of 1973, as amended. We published a notice outlining our reasons for this determination in the **Federal Register** on October 25, 1983 (48 FR 49244).

Paperwork Reduction Act

This rule does not contain any new collections of information that require approval by Office of Management and Budget (OMB) under the Paperwork Reduction Act (44 U.S.C. 3501 *et seq.*). This rule will not impose record keeping or reporting requirements on State or local governments, individuals, businesses, or organizations. An agency may not conduct or sponsor, and a person is not required to respond to, a collection of information unless it displays a currently valid OMB control number. Information collections associated with endangered species permits are covered by an existing OMB approval and are assigned control number 1018–0093 expires March 31, 2004.

Executive Order 13211

On May 18, 2001, the President issued an Executive Order on regulations that significantly affect energy supply, distribution, and use. Executive Order 13211 requires agencies to prepare Statements of Energy Effects when

undertaking certain actions. This rule is not expected to significantly affect energy supplies, distribution, or use. Therefore, this action is not a significant energy action and no Statement of Energy Effects is required.

References Cited

A complete list of all references cited herein is available upon request from the Nevada Fish and Wildlife Office (*see* **ADDRESSES** section).

Author

The primary author of this final rule is Marcy Haworth, U.S. Fish and Wildlife Service, Nevada Fish and Wildlife Office (*see* **ADDRESSES** section).

List of Subjects in 50 CFR Part 17

Endangered and threatened species, Exports, Imports, Reporting and recordkeeping requirements, Transportation.

Regulation Promulgation

Accordingly, we amend part 17, subchapter B of chapter I, title 50 of the Code of Federal Regulations as set forth below:

PART 17—[AMENDED]

1. The authority citation for part 17 continues to read as follows:

Authority: 16 U.S.C. 1361–1407; 16 U.S.C. 1531–1544; 16 U.S.C. 4201–4245; Pub. L. 99–625, 100 Stat. 3500, unless otherwise noted.

2. In § 17.11(h), add the following, in alphabetical order under INSECTS, to the List of Endangered and Threatened Wildlife:

§ 17.11 Endangered and threatened wildlife.

* * * * *

(h) * * *

Species		Historic range	Vertebrate population where endangered or threatened	Status	When listed	Critical habitat	Special rules
Common name	Scientific name						
*	*	*	*	*	*		*
INSECTS							
*	*	*	*	*	*		*
Skipper, Carson wandering.	*Pseudocopaeodes eunus obscurus*.	U.S.A. (CA, NV) ...	U.S.A., (Lassen County, CA; Washoe County, NV).	E	730	NA	NA
*	*	*	*	*	*		*

Dated: July 26, 2002.

Steve Williams,

Director, Fish and Wildlife Service.

[FR Doc. 02–20007 Filed 8–6–02; 8:45 am]

BILLING CODE 4310–55–P

DEPARTMENT OF COMMERCE

National Oceanic and Atmospheric Administration

50 CFR Part 679

[Docket No. 011218304–1304–01; I.D. 080202A]

Fisheries of the Exclusive Economic Zone Off Alaska; Deep-Water Species Fishery by Vessels Using Trawl Gear in the Gulf of Alaska

AGENCY: National Marine Fisheries Service (NMFS), National Oceanic and Atmospheric Administration (NOAA), Commerce.

ACTION: Closure.

SUMMARY: NMFS is prohibiting directed fishing for species that comprise the deep-water species fishery by vessels using trawl gear in the Gulf of Alaska (GOA). This action is necessary because the third seasonal apportionment of the 2002 Pacific halibut bycatch allowance specified for the deep-water species fishery in the GOA has been reached.

DATES: Effective 1200 hrs, Alaska local time (A.l.t.), August 2, 2002, until 1200 hrs, A.l.t., September 1, 2002.

FOR FURTHER INFORMATION CONTACT: Mary Furuness, 907–586–7228.

SUPPLEMENTARY INFORMATION: NMFS manages the groundfish fishery in the GOA exclusive economic zone according to the Fishery Management Plan for the Groundfish Fishery of the Gulf of Alaska (FMP) prepared by the North Pacific Fishery Management Council under authority of the Magnuson-Stevens Fishery Conservation and Management Act. Regulations governing fishing by U.S. vessels in accordance with the FMP appear at subpart H of 50 CFR part 600 and 50 CFR part 679.

The Pacific halibut bycatch allowance for the GOA trawl deep-water species fishery, which is defined at § 679.21(d)(3)(iii)(B), was established by an emergency rule implementing 2002 harvest specifications and associated management measures for the groundfish fisheries off Alaska (67 FR 956, January 8, 2002) for the third season, the period June 30, 2002, through September 1, 2002, as 400 metric tons.

In accordance with § 679.21(d)(7)(i), the Administrator, Alaska Region, NMFS, has determined that the third seasonal apportionment of the 2002 Pacific halibut bycatch allowance specified for the trawl deep-water species fishery in the GOA has been reached. Consequently, NMFS is prohibiting directed fishing for the deep-water species fishery by vessels using trawl gear in the GOA. The species and species groups that comprise the deep-water species fishery are: all rockfish of the genera *Sebastes* and *Sebastolobus*, deep water flatfish, rex sole, arrowtooth flounder, and sablefish.

Maximum retainable bycatch amounts may be found in the regulations at § 679.20(e) and (f).

Classification

This action responds to the best available information recently obtained from the fishery. The Assistant Administrator for Fisheries, NOAA, finds that, because the third seasonal apportionment of the 2002 Pacific halibut bycatch allowance specified for the deep-water species fishery in the GOA has been reached, the need to immediately implement this action constitutes good cause to waive the requirement to provide prior notice and opportunity for public comment pursuant to the authority set forth at 5 U.S.C. 553(b)(B). These procedures are unnecessary and contrary to the public interest because of the need to implement these measures in a timely fashion because the third seasonal apportionment of the 2002 Pacific halibut bycatch allowance specified for the deep-water species fishery in the

GOA has been reached. This constitutes good cause to find that the effective date of this action cannot be delayed for 30 days. Accordingly, under 5 U.S.C. 553(d)(3), a delay in the effective date is hereby waived.

This action is required by § 679.20 and is exempt from review under Executive Order 12866.

Authority: 16 U.S.C. 1801 *et seq.*

Dated: August 2, 2002.

Valerie Chambers,

Acting Director, Office of Sustainable Fisheries, National Marine Fisheries Service.

[FR Doc. 02–19974 Filed 8–2–02; 2:01 pm]

BILLING CODE 3510–22–S

DEPARTMENT OF COMMERCE

National Oceanic and Atmospheric Administration

50 CFR Part 679

[Docket No. 011218304–1304–01; I.D. 080202B]

Fisheries of the Exclusive Economic Zone Off Alaska; Shortraker and Rougheye Rockfish in the Western Regulatory Area of the Gulf of Alaska

AGENCY: National Marine Fisheries Service (NMFS), National Oceanic and Atmospheric Administration (NOAA), Commerce.

ACTION: Closure.

SUMMARY: NMFS is prohibiting retention of shortraker and rougheye rockfish in the Western Regulatory Area of the Gulf of Alaska (GOA). NMFS is requiring that catch of shortraker and rougheye rockfish in this area be treated in the same manner as prohibited species and discarded at sea with a minimum of injury. This action is necessary because the allocation of the shortraker and rougheye rockfish 2002 total allowable catch (TAC) in this area has been achieved.

DATES: Effective 1200 hrs, Alaska local time (A.l.t.), August 2, 2002, until 2400 hrs, A.l.t., December 31, 2002.

FOR FURTHER INFORMATION CONTACT: Mary Furuness, 907–586–7228.

SUPPLEMENTARY INFORMATION: NMFS manages the groundfish fishery in the GOA exclusive economic zone according to the Fishery Management Plan for the Groundfish Fishery of the Gulf of Alaska (FMP) prepared by the North Pacific Fishery Management Council under authority of the Magnuson-Stevens Fishery Conservation and Management Act. Regulations governing fishing by U.S. vessels in accordance with the FMP appear at subpart H of 50 CFR part 600 and 50 CFR part 679.

The 2002 TAC allocation of shortraker and rougheye rockfish for the Western Regulatory Area was established as 220 metric tons by an emergency rule implementing 2002 harvest specifications and associated management measures for the groundfish fisheries off Alaska (67 FR 956, January 8, 2002 and 67 FR 34860, May 6, 2002).

In accordance with § 679.20(d)(2), the Administrator, Alaska Region, NMFS, has determined that the allocation of the shortraker and rougheye rockfish TAC in the Western Regulatory Area of the GOA has been achieved. Therefore, NMFS is requiring that further catches of shortraker and rougheye rockfish in the Western Regulatory Area of the GOA be treated as prohibited species in accordance with § 679.21(b).

Classification

This action responds to the best available information recently obtained from the fishery. The Assistant Administrator for Fisheries, NOAA, finds good cause to waive the requirement to provide prior notice and opportunity for public comment pursuant to the authority set forth at 5 U.S.C. 553(b)(B) as such requirement is contrary to the public interest. This requirement is contrary to the public interest as it would delay the closure of the fishery, lead to exceeding the TAC, and therefore reduce the public's ability to use and enjoy the fishery resource.

The Assistant Administrator for Fisheries, NOAA also finds good cause to waive the 30–day delay in the effective date of this action under 5 U.S.C. 553(d)(3). This finding is based upon the reasons provided above for waiver of prior notice and opportunity for public comment.

This action is required by § 679.20 and is exempt from review under Executive Order 12866.

Authority: 16 U.S.C. 1801 *et seq.*

Dated: August 2, 2002.

Valerie Chambers,

Acting Director, Office of Sustainable Fisheries, National Marine Fisheries Service.

[FR Doc. 02–19975 Filed 8–2–02; 2:01 pm]

BILLING CODE 3510–22–S

Proposed Rules

Federal Register
Vol. 67, No. 152
Wednesday, August 7, 2002

This section of the FEDERAL REGISTER contains notices to the public of the proposed issuance of rules and regulations. The purpose of these notices is to give interested persons an opportunity to participate in the rule making prior to the adoption of the final rules.

FEDERAL ELECTION COMMISSION

11 CFR Parts 100, 104, 105 and 114

[Notice 2002–13]

Electioneering Communications

AGENCY: Federal Election Commission.

ACTION: Notice of proposed rulemaking.

SUMMARY: The Federal Election Commission is seeking comment on proposed rules regarding electioneering communications, which are certain broadcast, cable, and satellite communications that refer to a clearly identified Federal candidate within 60 days of a general election or within 30 days of a primary election for Federal office. The proposed rules implement the Bipartisan Campaign Reform Act of 2002 (''BCRA''), which adds to the Federal Election Campaign Act (''FECA'' or ''the Act'') new provisions regarding ''electioneering communications.'' The proposed rules would require any person who makes disbursements for electioneering communications in excess of $10,000 in a calendar year to file a disclosure statement within 24 hours of the time the disbursements exceed $10,000. Additionally, BCRA prohibits incorporated entities and labor organizations from making electioneering communications. The proposed rules would implement this prohibition. Please note that the draft rules that follow do not represent a final decision by the Commission on the issues presented by this rulemaking. In fact, some of the draft rules are offered as alternatives. Regardless, the Commission seeks comments on all of the issues that are raised in this rulemaking. Further information is provided in the supplementary information that follows.

DATES: The Commission will hold a hearing on these proposed rules on August 28–29, 2002, at 9:30 a.m. Commenters wishing to testify at the hearing must submit their request to testify along with their written or electronic comments by August 21, 2002. Commenters who do not wish to testify must submit their written or electronic comments by August 29, 2002.

ADDRESSES: All comments should be addressed to Ms. Mai T. Dinh, Acting Assistant General Counsel, and must be submitted in either electronic or written form. Electronic mail comments should be sent to *Electioneering@fec.gov* and must include the full name, electronic mail address, and postal service address of the commenter. Electronic mail comments that do not contain the full name, electronic mail address, and the postal service address of the commenter will not be considered. Faxed comments should be sent to (202) 219–3923, with printed copy follow-up to ensure legibility. Written comments and printed copies of faxed comments should be sent to Federal Election Commission, 999 E Street, NW., Washington, DC 20463. Commenters are strongly encouraged to submit comments electronically to ensure timely receipt and consideration. The Commission will make every effort to post public comments on its Web site within ten business days of the close of each comment period. The hearing will be held in the Commission's ninth floor meeting room, 999 E. St. NW., Washington, DC.

FOR FURTHER INFORMATION CONTACT: Ms. Mai T. Dinh, Acting Assistant General Counsel, Mr. J. Duane Pugh, Jr., Acting Special Assistant General Counsel, or Mr. Anthony T. Buckley, Attorney, 999 E Street, NW., Washington, DC 20463, (202) 694–1650 or (800) 424–9530.

SUPPLEMENTARY INFORMATION: The Bipartisan Campaign Reform Act of 2002, Pub. L. 107–155, 116 Stat. 81 (March 27, 2002), contains extensive and detailed amendments to the Federal Election Campaign Act of 1971, as amended, 2 U.S.C. 431 *et seq.* This is one of a series of Notices of Proposed Rulemakings (''NPRM'') the Commission will publish over the next several months in order to meet the rulemaking deadlines set out in BCRA.

This NPRM addresses electioneering communications, that is, certain broadcast, cable, or satellite communications that refer to a clearly identified candidate for Federal election that are made within 60 days of a general election or within 30 days of a primary election. Other rulemakings have addressed or will address: (1) Non-Federal funds or ''soft money'' promulgated on June 22, 2002 (67 FR 49063 (July 29, 2002)); (2) coordinated and independent expenditures; [1] (3) the so-called ''millionaires' amendment,'' which increases contribution limits for congressional candidates facing self-financed candidates on a sliding scale, based on the amount of personal funds the opponent contributes to his or her campaign; (4) new or amended contribution limitations and prohibitions; (5) other new and amended provisions, including inaugural committees, fraudulent solicitations, disclaimers, personal use of campaign funds, and civil penalties; (6) reporting; and (7) reorganization of ''contribution'' and ''expenditure'' definitions. The reporting NPRM will contain the reporting rules proposed in several of the other NPRMs and will restructure 11 CFR part 104 to make the reporting rules more user-friendly. The deadline for the promulgation of the remaining rules (including those proposed in this NPRM) is 270 days after the date of BCRA's enactment, or December 22, 2002.

What Is an Electioneering Communication?

I. Introduction

BCRA at 2 U.S.C. 434(f)(3) defines a new term, called ''electioneering communications.'' This term includes broadcast, cable, or satellite communications: (1) That refer to a clearly identified Federal candidate; (2) that are transmitted within certain time periods before a primary or general election; and (3) that are ''targeted to the relevant electorate,'' that is, the relevant congressional district or State that candidates for the U.S. House of Representatives or the U.S. Senate seek to represent. Communications that refer to candidates for President or Vice-President do not need to be targeted to be electioneering communications. Those paying for the communications must meet certain disclosure requirements, and they cannot use funds from national banks, corporations, foreign nationals,[2] or labor organizations to pay for the communications. *See* 2 U.S.C.

[1] That future NPRM will also address electioneering communications that are coordinated with candidate and political party committees.

[2] The ban on foreign national funds will be addressed in a separate rulemaking.

441b(b)(2) and 441e(a)(2), as amended by BCRA section 203(b) and 303.

BCRA's sponsors have explained that these new ''electioneering communications'' provisions, set out at new 2 U.S.C. 434(f) and 441b(b)(2), are designed to ensure that campaign advertisements are paid for with funds subject to the prohibitions and limitations of campaign finance laws. According to the sponsors, putative ''issue ads'' have been used to circumvent FECA's prohibition on the use of union and corporate treasury funds in connection with Federal elections. In the sponsors' view, this is accomplished by creating and airing advertisements that avoid the specific language that the Supreme Court has said expressly advocates the election or defeat of a candidate. *See* 148 Cong. Rec. S2140–2141 (daily ed. Mar. 20, 2002) (statement of Sen. McCain); *see also Buckley* v. *Valeo*, 424 U.S. 1, 44, fn. 52 (1976); 11 CFR 100.22.[3]

BCRA's sponsors cited various studies and investigations that they say show that the express advocacy test does not distinguish genuine issue ads from campaign ads. 148 Cong. Reg. at S2140–2141 (statement of Sen. McCain). For example, Senator McCain cited a study by the Brennan Center for Justice, *Buying Time 2000*, that found that ''97 percent of the electioneering ads reviewed'' did not use the words and phrases cited by the *Buckley* Court, and that more than 99 percent of the ''group-sponsored soft money ads'' studied were in fact campaign ads. *Id.* at S2141. Senators Snowe and Jeffords stated that, because the electioneering communications provisions focus on the key elements of when, how, and to whom a communication is made, rather than relying on the express advocacy test or the intent of the advertiser, they are a clearer, more accurate test of whether an advertisement is campaign-related. *Id.* at S2117–18 (statement of Sen. Jeffords); S2135–37 (statement of Sen. Snowe).

[3] ''Express advocacy'' was first defined by the Supreme Court as ''communications containing express words of advocacy of election or defeat, such as 'vote for,'' 'elect,'' 'cast your ballot for,'' 'Smith for Congress,'' 'vote against,'' 'defeat,'' 'reject.' '' *Buckley* at 44. fn. 52 (1976). The Supreme Court created the express advocacy test to save the statutory phrase ''for the purpose of * * * influencing''—the ''critical phrase'' within the definitions of ''expenditure'' and ''contribution'' at 2 U.S.C. 431(8) and (9)—from unconstitutional vagueness while furthering the goal of Congress ''to insure both the reality and the appearance of the purity and openess of the federal election process.'' *Buckley* v. *Valeo*. 424 U.S. 1, 77–78 (1976). The Court's express advocacy test marked the dividing line between advocacy regulated by the FECA and the advocacy of ''issues of public interest,'' both of which are constitutionally protected , *Id.* at 42, 44, 80.

Accordingly, the proposed rules would add a new definition for ''electioneering communication,'' to be located at proposed 11 CFR 100.29. The new definition would be added to current 11 CFR part 100 because it has general applicability to Title 11 of the *Code of Federal Regulations.*

II. Alternative Definition

BCRA at 2 U.S.C. 434(f)(3)(A)(ii) provides an alternative definition of ''electioneering communication,'' which would take effect in the event the definition in section 434(f)(3)(A)(i) is held to be constitutionally insufficient ''by final judicial decision.'' The alternative definition of ''electioneering communication'' is ''any broadcast, cable, or satellite communication which promotes or supports a candidate for that office, or attacks or opposes a candidate for that office (regardless of whether the communication expressly advocates a vote for or against a candidate) and which also is suggestive of no plausible meaning other than an exhortation to vote for or against a specific candidate.'' *Id.* The Commission is not proposing regulations to implement this alternative statutory definition at this time. Proposing two definitions for the same term, one to take effect only after the other may be held invalid, could be confusing to those who are affected by this new law. Additionally, any court decision regarding 2 U.S.C. 434(f)(3)(A) may provide guidance as to the appropriate standard. Consequently, the Commission intends to promulgate regulations to implement this alternative definition when and if it becomes necessary to do so. Nevertheless, in the alternative, the Commission seeks comment as to whether it should promulgate an alternative definition now. If so, should this definition simply reiterate the wording of the statute, or should it provide additional guidance as to what types of communications promote, support, attack, or oppose a candidate and suggest no plausible meaning other than an exhortation to vote for or against a candidate?

III. Definition of ''Electioneering Communication''

A. Overview

BCRA amends 2 U.S.C. 434 by adding a new term, ''electioneering communication,'' at section 434(f)(3). BCRA defines ''electioneering communication'' as a broadcast, cable, or satellite communication that: (1) Refers to a clearly identified candidate for Federal office; (2) is made within 60 days before a general, special, or runoff election, or within 30 days before a primary or preference election, or a convention or caucus of a political party that has authority to nominate a candidate, for the office sought by the candidate; (3) does not fall within any of the exceptions to the electioneering communication specified in the statute; and (4) in the case of a candidate for an office other than President or Vice-President, is targeted to the relevant electorate. BCRA also provides exceptions to the definition, and authorizes the Commission to approve additional exceptions.

The proposed definition of electioneering communication at proposed 11 CFR 100.29(a) largely tracks the language in BCRA. However, the word ''made'' as in ''made within 60 days'' would be changed to ''publicly distributed'' to clarify that it refers to the broadcasting or airing of the communication rather than the making of a disbursement for an electioneering communication. The proposed definition would also clarify that, in the case of a candidate for nomination for President or Vice-President, the 30-day window applies in those States that will hold a primary or preference election, or a convention or caucus of a political party that has authority to nominate a candidate for President or Vice-President, during that time.

The Commission's current rules at 11 CFR 100.2 contain definitions of ''general election,'' ''primary election,'' ''runoff election,'' ''caucus or convention,''and ''special election.'' Under 11 CFR 100.2(f), a ''special election'' could be a primary, general, or runoff election. BCRA, however, groups ''special election'' with general and runoff elections for purposes of an electioneering communication. Proposed new paragraph 100.29(a)(2) would clarify that, for purposes of section 100.29 only, ''special elections'' and ''runoff elections'' would be considered primary elections, if held to nominate a candidate; and general elections, if held to elect a candidate. Comments are sought on this approach.

B. Definition of ''Refers to a Clearly Identified Candidate''

Proposed 11 CFR 100.29(b) would set out definitions of the terms used in 11 CFR 100.29(a). The first definition, at proposed 11 CFR 100.29(b)(1), defines the term ''refers to a clearly identified candidate.'' This term is already defined in the Commission's rules at 11 CFR 100.17, which states that ''clearly identified'' means the candidate's name, nickname, photograph, or drawing appears, or the identity of the candidate

is otherwise apparent through an unambiguous reference such as ''the President,'' ''your Congressman,'' or ''the incumbent,'' or through an unambiguous reference to his or her status as a candidate such as ''the Democratic presidential nominee'' or ''the Republican candidate for Senate in the State of Georgia.'' The proposed rule at 11 CFR 100.29(b) would track the language of the current rule in 11 CFR 100.17. This approach appears to be consistent with legislative intent. *See* 148 Cong. Rec. S2144 (daily ed. Mar. 20, 2002) (statement of Sen. Feingold indicating that a communication ''refers to a clearly identified candidate'' if it ''mentions, identifies, cites, or directs the public to the candidate's name, photograph, drawing or otherwise makes an 'unambiguous reference' to the candidate's identity''). Please note that the definition would not be based on the intent or purpose of the person making the communication.

C. Definition of ''Broadcast, Cable or Satellite Communication''

Proposed 11 CFR 100.29(b)(2) would define ''broadcast, cable, or satellite communication'' to mean a communication that is publicly distributed by a television station, radio station, cable television system, or satellite system. The term ''distribute'' reflects the legislation's apparent focus on the means of dissemination rather than on the means of receipt.

The definition would exclude ''webcasts'' or other communications that are distributed only over the Internet, but would include television or radio communications that are simultaneously webcast over the Internet, or archived for listening over the Internet. Internet subscribers would not be included in the calculation of how many persons a communication can reach in a particular district or state. The Commission seeks comment on whether this is an appropriate reading of the statute.

The legislative history, which is discussed below, makes it clear that this regulation should be limited to television and radio. The Commission seeks comment to confirm that this interpretation is correct. All other types of communications, such as print media, billboards, telephones, and the Internet, would therefore, *not* be considered electioneering communications. Consequently, proposed 11 CFR 100.29(c)(1) would specifically list these as exceptions to the definition.

The Commission also seeks comment on whether it would also be appropriate to exempt some types of television and radio broadcasting from the definition of ''broadcast, radio or satellite.'' The Commission seeks comment on whether communications transmitted by digital audio radio satellite would be considered electioneering communications. Although newly added section 304(f)(3)(a) of BCRA seems to include communications by satellite without limitation as to the type of transmission, section 316(c)(6)(B) suggests that the term is limited to ''satellite television service.'' Proposed 11 CFR 100.29(b) would exempt Low Power FM Radio (LPFM), Low Power Television (LPTV), and citizens band (CB) radio. Are there other types of television and broadcasting that should also be exempt? How should ''web TV'' (in which viewers access the Internet using television sets) be treated for purposes of these rules?

D. Definition of ''Targeted to the Relevant Electorate''

Proposed 11 CFR 100.29(b)(3) would track the language of BCRA at 2 U.S.C. 434(f)(3)(C) in defining ''targeted to the relevant electorate'' as a communication that can be received by 50,000 or more persons: In the district the candidate seeks to represent, in the case of a candidate for Representative in, or Delegate or Resident Commissioner to, the U.S. House of Representatives; or in the State the candidate seeks to represent, in the case of a candidate for the U.S. Senate.

Please note that the definition of ''targeted to the relevant electorate'' would include communications that can be received beyond the relevant geographical area. A communication that can also be received by large numbers of persons outside the relevant district or State would still be considered a targeted communication, as long as 50,000 persons in the relevant area could also receive it. Conversely, for example, an electioneering communication would not include a communication that reaches fewer than 50,000 persons in the State or district where the clearly identified candidate is running, even if at the same time it also reaches 50,000 or more persons in a State or district where the clearly identified candidate is not running.

Regarding whether a communication reaches 50,000 or more persons, the Commission seeks comment as to how to measure, and where to obtain the data concerning, the number of persons a communication reaches. For example, what signal measurement (*e.g.,* Grade B contour) should be used in determining how many people a broadcast signal reaches, and how does one determine if a broadcast station's signal could potentially reach 50,000 or more persons in a particular district or state? Should a broadcast station be required to provide the Federal Communications Commission with information regarding the cable system(s) and satellite system(s) that carry it in order that the cable and satellite systems' audience can be included in the calculation of the number of persons reached by the broadcast station? If such audiences were included in this calculation, how could double counting of some viewers (those that can receive the station's signal both over the air and through a cable or satellite system) be avoided? Is subscriber information the only basis for measuring the audience of a cable or satellite system? If so, must the FCC compel cable and satellite companies to provide it with this data because they are the only possible source of this information? How should subscriber information be converted into the chosen definition of ''person'' in new 2 U.S.C. 434(f)(3)(C), discussed herein? If, for whatever reason, it cannot be determined whether a particular communication will reach 50,000 or more persons in a relevant district or state, should it be presumed that the communication reaches fewer or more than 50,000 persons?

Theoretically, one ad could be publicly distributed via several small outlets, each of which reaches fewer than 50,000 persons in the relevant area, but in the aggregate reach 50,000 or more persons in the relevant area. Practically, the size of radio and television audiences may eliminate this concern. The Commission seeks comments on whether the regulations should address this situation to require aggregation of recipients of the same ad from multiple outlets and, if so, whether the regulations should aggregate substantially similar ads for this purpose.

The term ''person'' is defined in 2 U.S.C. 431(11) and in current Commission regulations at 11 CFR 100.10 to mean an individual, partnership, association, corporation, labor organization and any other organization or group of persons. It is not clear from the legislative history of BCRA whether the term ''person'' in new 2 U.S.C. 434(f)(3)(C) is intended to be restricted to only individuals, households, U.S. citizens, voters, those within the voting age population, or any other category of ''person.'' The Commission believes that BCRA's policies are best served by construing the term ''person'' as applying to natural persons residing in a given jurisdiction, regardless of their citizenship status or whether they are of voting age. The

Commission seeks comments on which interpretation is correct. Whatever definition of ''person'' commenters choose should be associated with clearly identified sources of information needed to implement this section of BCRA.

Pursuant to section 201(b) of BCRA,[4] the Federal Communications Commission must ''compile and maintain'' any information the Federal Election Commission may require to ensure that proper disclosure of electioneering communications is made. The FCC is required to make such information publicly available on its website. These requirements appear to be necessary to promote compliance with the disclosure requirements in the new law regarding electioneering communications. Those who wish to make communications that meet the timing and medium requirements of the electioneering communication definition, must be able to easily determine whether the radio or television stations, cable systems, or satellite systems on which they wish to publicly distribute their communications will reach 50,000 or more persons in the State or congressional district in which the candidate mentioned in the communication is running for office. Consequently, the Commission has preliminarily concluded that a database searchable by State, congressional district, radio and television station call letters, cable system or satellite system, and radio station frequencies, should be created, and that a search under any of these options should reveal whether 50,000 or more persons in a specified State or congressional district are capable of receiving a communication transmitted through a broadcast station, cable system or satellite system. The Commission seeks comments as to whether any additional information or searchable options for the FCC's website are necessary or desirable.

It would also be helpful for the FCC's website to contain a link to the new electioneering communication forms (Form 9 and Schedule J) that the Commission will create for reporting electioneering communications. Further, the Commission anticipates placing a link on its own website to the page on the FCC website containing the database. The Commission seeks comments on what, if any, additional features on the FEC or FCC websites should be made available. Proposed 11 CFR 100.29(b)(5) would list the types of information the FCC may determine it will provide on its website.

[4] This section of BCRA has not been codified.

The Commission anticipates that the information on the FCC website will also allow interested parties to determine easily whether a given communication is capable of reaching 50,000 persons. Thus, the information on the FCC website is intended to serve as *definitive* evidence of whether a communication could have been received by 50,000 or more persons. For example, if the information on the FCC website indicated that a certain radio station can reach fewer than 50,000 persons in a certain congressional district, and an ad was run only on that station 45 days before the general election that referred to a House candidate in that district, then the persons paying for that communication would not have to disclose the communication under the proposed reporting rules and would have a complete defense against any charge that they violated that portion of BCRA. For a discussion of the determination of whether a communication reaches 50,000 or more persons, see above. Comments are sought as to whether this approach is correct.

E. Presidential Primary Candidates

With respect to Presidential primary candidates, one plausible reading of 2 U.S.C. 434(f)(3)(C) is that a communication that refers to a Presidential candidate does not need to be ''targeted to the relevant electorate'' to qualify as an ''electioneering communication.'' Thus, under this interpretation, a communication referring to a clearly identified primary candidate for President that meets BCRA's timing and medium requirements, and that does not fall within any of the statutory exceptions, might be considered an electioneering communication, regardless of the number or geographic location of persons receiving the communication. For example, an ad referring to a primary candidate for President that is run anywhere in the United States could be considered an ''electioneering communication'' if the ad aired on a television or radio station within 30 days of a primary election taking place *anywhere* in the United States, even if the primary election were months away or had already taken place in the State or States in which the ad actually aired.

However, the Commission is concerned that such a sweeping impact on communications would be insufficiently linked to pending primary elections, may not have been contemplated by Congress and could raise constitutional concerns. It would result in a nationwide blackout on ads mentioning a Presidential candidate for more than 240 day between mid-December of the year preceding the election and the election itself. So interpreted, the restrictions on electioneering communications would take effect even if an ad were aired only in a State that has already held its primary, and thus would restrict ads more than 60 days before a general election, an apparent contravention of BCRA. Therefore, the Commission is proposing a definition of ''publicly distributed within 30 days of a primary election'' to make clear that an ad mentioning a candidate for President or Vice-President is not deemed to have been transmitted within 30 days before a primary election unless the ad is transmitted to an audience of 50,000 or more persons in an area in which a primary election is scheduled within 30 days. (This definition is listed as Alternative 1–B in proposed 11 CFR 100.29.) Such a definition, which would be placed within 11 CFR 100.29(b), would state that a communication that refers to a clearly identified candidate for President or Vice President would be ''publicly distributed'' within 30 days before a primary election, preference election, or convention or caucus of a political party only where and when the communication can be received by 50,000 or more persons within the State holding such election, convention or caucus. No such clarification is necessary for Presidential and Vice-Presidential nominees in the 60 days preceding the general election, as the date of the general election does not vary from State to State.

As an alternative means of addressing this concern, the Commission could adopt a provision stating that an advertisement be considered an electioneering communication only if the advertisement can be received by 50,000 or more persons in either a State in which a Presidential primary will occur within 30 days, or nationwide if within 30 days of the national nominating convention of that candidate's party. If adopted, this provision would appear at new 11 CFR 100.29(a)(1)(iv), rather than 11 CFR 100.29(b)(4), and appears in the proposed rules as Alternative 1–A.

Comments are sought on the alternative approaches, which are consistent with a requirement that the communication occur within a fixed number of days before a primary election, and would involve a far lesser impact on fundamental First Amendment rights. The Commission especially seeks comment on whether either alternative is allowed under BCRA.

Separately, comments are sought on whether BCRA's electioneering communications restrictions apply at all to communications depicting Presidential or Vice-Presidential candidates, other than 30 days before a party's national convention and 60 days before the general election, given that candidates can only be nominated for President or Vice-President at their parties' national convention.

What is Not an Electioneering Communication?

I. Specific Types of Communications

Consistent with 2 U.S.C. 434(f)(3)(B), proposed 11 CFR 100.29(c) would list examples of communications that are *not* ''electioneering communications.''

It appears clear from the legislative history of BCRA that the term ''electioneering communications'' only applies to communications that are publicly distributed by television or radio, and not through other media. For this reason the definition of ''electioneering communications'' is narrowly tailored, listing only three types of communications: broadcast, cable, and satellite communications.

The electioneering communication provisions were originally offered as an amendment to the predecessor of BCRA by Senators Snowe and Jeffords in 1998. That amendment, and all versions of that amendment prior to the 107th Congress, defined an electioneering communication to include ''any broadcast from a television or radio broadcast station.'' *See* 144 Cong. Record S938 (daily ed. Feb. 24, 1998); *see also* S.26 (106th Congress), 145 Cong. Rec. S425 (daily ed. Jan. 19, 1999). Likewise, the floor debates on the electioneering communications provision during the 107th Congress frequently referred to ''television and radio ads.'' During a final explanation of these provisions, Senator Snowe again stated that they would apply to ''so-called issue ads run on television and radio only.'' 148 Cong. Rec. S2135 (daily ed. Mar. 20, 2002) (statement of Sen. Snowe).

Consistent with this legislative history, proposed 11 CFR 100.29(c)(1) provides examples of communications that are *not* included in the definition of ''electioneering communication.'' The proposed list of exemptions includes communications appearing in print media, including a newspaper or magazine, handbills, brochures, yard signs, posters, billboards, and other written materials, including mailings; communications over the Internet, including electronic mail; and telephone communications.

The Internet is included in the above list of exceptions because, in most instances, it is not a broadcast, cable, or satellite communication, and it is not sufficiently akin to television and radio. During an early debate on the amendment, Senator Snowe was asked whether the definition of electioneering communication would ''apply to the Internet.'' She replied, ''No. Television and radio.'' *See* 144 Cong. Rec. S973 and S974 (daily ed. Feb. 25, 1998) (statement of Sen. Snowe). The Commission seeks comment confirming that this is a correct interpretation of BCRA.

II. The News Story, Commentary, or Editorial Exception

Proposed 11 CFR 100.29(c)(2) tracks the language in BCRA at 2 U.S.C. 434(f)(3)(B)(i) by excluding communications that appear in a ''news story, commentary, or editorial'' distributed from a broadcasting station, unless the broadcasting station is owned or controlled by any political party or committee, or candidate. The proposed rule, however, would add that the exception would apply to broadcasting stations owned or controlled by a party, committee, or candidate if the communication meets the requirements of 11 CFR 100.132(a) and (b). Please note that this portion of BCRA refers only to ''broadcasting stations.'' While this is consistent with the use of the term throughout 2 U.S.C. 431, which sets out general definitions under the FECA, it is narrower than the term ''broadcast, cable or satellite communication'' found in the general definition of ''electioneering communication'' at 2 U.S.C. 434(f)(3)(A). The Commission is proposing to use the broader term in section 100.29(c)(2), as the legislative history gives no reason for this disparate treatment. However, it welcomes comments on whether the narrower term would be appropriate. In the alternative, the Commission could decline to create a new media exemption for electioneering communications, but instead rely on its existing media exemption at 11 CFR 100.132. The Commission seeks comment on which is the appropriate course of action.

III. Exception for Expenditures and Independent Expenditures

Proposed 11 CFR 100.29(c)(3) implements the language in BCRA at 2 U.S.C. 434(f)(3)(B)(ii) excluding communications that are ''expenditures'' or ''independent expenditures'' from the definition of ''electioneering communications.'' Senator Feingold explained that independent expenditures were excluded because they contain express advocacy, apparently in contrast to electioneering communications, which do not contain express advocacy. *See* 148 Cong. Rec. S1993 (daily ed. Mar. 18, 2002) (statement and section-by-section analysis of BCRA by Sen. Feingold).

In this regard, the Commission is proposing two alternatives. One interpretation put forward by the Commission would be that any disbursement of funds for a communication that constitutes an expenditure or an independent expenditure under FECA is not an electioneering communication. *See* Alternative 2–A, below. In addition, any expenditure of a Federal political committee would remain subject to FECA's reporting requirements. 2 U.S.C. 434(b)(4)(A). Thus, Federal political committees would not be required to file an additional electioneering communication report for expenditures for communications that otherwise meet the definition of electioneering communication. Consequently, the segregated bank account provisions of 2 U.S.C. 434(f)(2)(E) would not apply to expenditures either.

It can be argued that FECA adequately addresses expenditures, independent expenditures and Federal political committee outlays, and BCRA's Title II was intended to address disbursements that are not subject to FECA's treatment of such expenditures. Similarly, the exclusion may represent an effort to avoid duplicative reporting requirements. To include communications that are expenditures and independent expenditures would subject such communications to duplicative and often conflicting reporting requirements.

The Commission also seeks comment on whether to limit the exclusion to candidate-specific expenditures reportable as independent expenditures, in-kind contributions or a party coordinated expenditure by non-authorized Federal political committees. *See* Alternative 2–B, below. This would subject non-authorized Federal political committees making non-coordinated non-express advocacy communications to duplicative reporting requirements. In addition, the Commission notes that all expenditures of authorized committees are, by definition, for the purpose of influencing the candidate's election to Federal office. For this reason, the Commission is seeking comment on excepting from the definition of electioneering communication expenditures for any public communication made by a

Federal candidate or officeholder's authorized campaign committee.

The Commission seeks comment on the approach and issues raised above and on any other interpretation of the exemption of 2 U.S.C. 434(f)(3)(B)(ii) that reconciles the exclusion of expenditures and independent expenditures from the definition of electioneering communication with FECA's treatment of expenditures and independent expenditures.

IV. Exception for Candidate Debates or Forums

Proposed 11 CFR 100.29(c)(4) tracks the language in BCRA at 2 U.S.C. 434(f)(3)(B)(iii) excluding communications that constitute ''a candidate debate or forum conducted pursuant to regulations adopted by the Commission, or which solely promotes such a debate or forum and is made by or on behalf of the person sponsoring the debate or forum.''

The Commission's regulations at 11 CFR 110.13(a)(2) and 114.4(f) authorize incorporated broadcasters and other media organizations to stage and cover candidate debates without making impermissible contributions or expenditures. Section 110.13(c) requires those organizations staging debates to use pre-established objective criteria in determining which candidates may participate in a debate. It further prohibits staging organizations from using nomination by a major party as the sole objective criterion for choosing candidates to participate in a general election debate.[5]

V. Other Exceptions

New 2 U.S.C. 434(f)(3)(B)(iv) provides that ''to ensure the appropriate implementation'' of the electioneering communication provisions, the Commission may promulgate regulations exempting other communications from the ''electioneering communications'' definition, provided that the exemption otherwise complies with the new electioneering communication provision and is not described in 2 U.S.C. 431(20)(A)(iii) (''public communications'' that refer to a clearly identified candidate for Federal office that promote or support a candidate for that office, or attack or oppose a candidate for that office). The Commission is interested in receiving specific suggestions on whether there should be exemptions for communications that refer to a clearly identified candidate but that promote local tourism, or a ballot initiative, or a referendum. The Commission is also interested in receiving suggestions on whether there should be exemptions for communications that refer to a clearly identified candidate but that are public service announcements or that promote a candidate's business or professional practice. Absent such exemptions, such communications could be electioneering communications even if they contain only a glimpse of a Federal candidate. Proposed 11 CFR 100.29(c)(1), (c)(5), (c)(6) (including four alternatives) and (c)(7) would set forth such exemptions. Proposed paragraph (c)(1) was discussed above.

Proposed paragraph (c)(5) would exempt a communication that refers to a bill or law by its popular name where that name happens to include the name of a Federal candidate, if the popular name is the sole reference made to a Federal candidate.

Four alternatives (Alternatives 3–A, 3–B, 3–C, and 3–D) for proposed paragraph (c)(6) would exempt communications that are devoted to urging support for or opposition to particular pending legislation or other matters, where the communications request recipients to contact various categories of public officials regarding the issue. The Commission seeks comment as to which, if any, alternative is most consonant with the language and purposes of BCRA.

Proposed paragraph (c)(7) would exempt communications by State or local candidates or officeholders that refer to a clearly identified federal candidate, provided that such mention of a federal candidate was merely incidental to the candidacy of one or more individuals for State or local office. For example, under this approach an ad for a State or local candidate that featured such candidate's views on education would not be rendered an electioneering communication if the ad were to indicate whether the State or local candidate supported or opposed the President's education policy.

The Commission seeks comments as to whether any other communications should be exempt from the ''electioneering communication'' definition, as well as whether the proposed exemptions are too broadly or narrowly crafted. For example, the Brennan Center report cited by Senator McCain states that so-called ''genuine'' issue ads discuss public policy issues and usually contain a toll-free number, whereas so-called ''sham'' issue ads do not. *Buying Time 2000,* p. 31–32. In light of this study, and to avoid overbreadth, should the Commission exempt ads that: (1) Do not include express advocacy; and (2) include both a telephone number and a reference to a specific piece of legislation either by formal name (for example, the ''Bipartisan Campaign Reform Act of 2002''), popular name (for example, ''Shays-Meehan''), or bill number (for example, ''H.R. 2356'')?

If the Commission creates an exemption like any of the proposed alternatives at paragraph (c)(6), because most Congressional offices do not maintain toll free numbers, should it be sufficient to list a non-toll free number? Must the number be to a Congressional or district office? Is it acceptable to provide the number for a campaign office? Alternatively, to what extent should these distinctions turn on whether the ad refers to a general issue, such as Medicare, without mentioning specific legislation? *See Buying Time 2000, p. 103.*

Another possible exemption might be for entertainment shows, such as television talk shows, which may fall outside of the news exemption, which feature a candidate as a guest, or a television drama or comedy in which a picture of a candidate appears. The Commission seeks comments on the appropriateness of all of the above-mentioned possible exemptions from the ''electioneering communication'' definition, and whether additional exemptions should be considered. Should the definition of electioneering communication be limited to paid advertisements? Should the Commission create an exemption for communications publicly distributed exclusively over public access channels? Should the Commission limit any of the exemptions to ads that do not promote, support, attack, or oppose any clearly identified candidate?

[5] The Commission received a Petition for Rulemaking from a number of corporations owning and operating news organizations, television stations, newspapers, cable channels, and other media ventures, as well as media trade associations. The petition asked the Commission to amend its regulation on sponsorship of candidate debates to ''make clear that it does not apply to the sponsorship of a candidate debate by a news organization or a trade organization composed of, or representing, members of the press.'' The petition asserts that any regulation of the sponsorship of debates by news organizations or related trade associations is contrary to the clear intent of the U.S. Congress, irreconcilable with other FEC decisions, in conflict with the regulatory decisions of the Federal Communications Commission, and unconstitutional. A Notice of Availability for the petition was published on May 9, 2002 (65 Fed. Reg. 31164). Two comments were received by the end of the public comment period, on June 10, 2002. However, the Commission intends to defer consideration of whether to issue a Notice of Proposed Rulemaking until after the statutorily required BCRA rulemakings are completed by the end of the year. In the meantime, the Commission's debate regulations remain in effect.

Who May Make or Fund Electioneering Communications?

BCRA allows the following persons to make electioneering communications: (1) Individuals; (2) ''political committees'' as defined under FECA, including authorized committees, party committees, separate segregated funds, and nonconnected committees; (3) unincorporated organizations, including partnerships, limited liability companies (LLCs) that do not qualify as corporations, unincorporated trade associations or membership organizations, unincorporated 501(c)(3) or (4)'s, and unincorporated 527's, as long as they do not use funds received from corporations or labor organizations to pay for the electioneering communications; and (4) incorporated 501(c)(4)'s and 527's, as long as they meet certain requirements discussed more fully below. The Commission seeks comment on whether there is any section in BCRA that would prevent an entity prohibited from making an electioneering communication from being affiliated with an entity that is permitted to make electioneering communications, provided that the permissible entity received no prohibited funds from the prohibited entity. In addition, the Commission seeks comment on whether a 501(c)(4) or a 527 organization that was previously incorporated and that changes its status to become a limited liability company or similar type of entity under State law would be permitted to pay for electioneering communications with funds that had been donated from individuals to the 501(c)(4) or 527 organization during the time it was incorporated.

Who May Not Make or Fund Electioneering Communications?

I. Effect of the Snowe-Jeffords and Wellstone Amendments on 501(c)(4) and 527 Organizations

The BCRA provisions popularly known as the Snowe-Jeffords amendment expanded the prohibitions on corporations and labor organizations to prohibit use of general treasury funds to make electioneering communications. 2 U.S.C. 441b(b)(2). BCRA treats an electioneering communication as being made by a corporation or labor organization if that corporation or labor organization directly or indirectly disburses any amount for any of the costs of the electioneering communication. 2 U.S.C. 441b(c)(3)(A). The Snowe-Jeffords provisions included an exception, however, allowing corporations organized under 26 U.S.C. 501(c)(4) or 26 U.S.C. 527(e)(1) to make electioneering communications, as long as they use funds that do not come from prohibited sources.[6] As noted by Senator Snowe, these same section 501(c)(4) and 527 organizations must comply with BCRA's newly-enacted disclosure provisions. See 2 U.S.C. 434(f); see also proposed 11 CFR 104.19. Under Snowe-Jeffords, organizations that engaged in business activities or accepted corporate or labor organization funds would have been permitted to establish a segregated bank account to which only individuals (U.S. citizens, U.S. nationals, and green card holders) could contribute to pay for all electioneering communications. 2 U.S.C. 441b(c)(3)(B). It is important to note that the account required by Snowe-Jeffords is not a separate segregated fund or a political committee within the meaning of 2 U.S.C. 431(4)(B), and does not have the same registration, reporting and recordkeeping obligations of such a fund or committee.

The Snowe-Jeffords amendment was substantially modified in this regard by the Wellstone amendment. 2 U.S.C. 441b(c)(6). Where Snowe-Jeffords exempted section 501(c)(4) and section 527 corporations from the prohibition on using treasury funds to make electioneering communications under certain circumstances, the Wellstone amendment withdraws that exemption in the case of what are called ''targeted communications.'' 2 U.S.C. 441b(c)(6)(A). The Wellstone amendment then defines ''targeted communication'' to encompass all electioneering communications. Specifically, it defines ''targeted communication'' to mean ''an electioneering communication (as defined in section 304(f)(3)) [2 U.S.C. 434(f)(3)] that is distributed from a television or radio broadcast station or provider of cable or satellite television service and, in the case of a communication which refers to a candidate for an office other than President or Vice-President, is targeted to the relevant electorate.'' 2 U.S.C. 441b(c)(6)(B). The Wellstone amendment then defines ''targeted to the relevant electorate'' by referencing the definition in the Snowe-Jeffords amendment. 2 U.S.C. 441b(c)(6)(C). Under the interpretation of the Wellstone amendment in the proposed rules, ''targeted communication'' would not be limited to communications referring only to candidates for the U.S. House of Representatives and the U.S. Senate directed to the relevant electorate, but would also include communications that refer to Presidential and Vice-Presidential candidates, with all of the relevant restrictions being applicable. Further, it appears that Senator Wellstone intended his amendment to be applicable to Presidential and Vice-Presidential elections. During the Senate debate, one of the examples of the communications his amendment was intended to reach were ads run by an organization during a presidential primary campaign. *See* 147 Cong. Rec. S2848 (daily ed. Mar. 26, 2001).

An alternative interpretation of BCRA would remove communications that refer to a candidate for the office of President or Vice-President from the definition of ''targeted communication.'' This interpretation of 2 U.S.C. 441b(c)(6)(B) is based on the reading that because the second condition in the section does not apply to candidates for President or Vice-President, the Wellstone amendment does not apply to these candidates. Under this interpretation, incorporated section 501(c)(4) organizations and section 527 organizations that accept corporate and labor organization funds would be able to make electioneering communications with respect to Presidential and Vice-Presidential elections, as described above, using funds that do not come from corporations, labor organizations or foreign nationals. Although this alternative is not set out in the proposed rules that follow, the Commission seeks comment on it.

Because the Wellstone amendment defines ''targeted communication'' to include all electioneering communications, *see* 2 U.S.C. 441b(c)(6)(B), the result of the Wellstone amendment is that any corporations whatever, including incorporated 501(c)(4) and 527 organizations, are prohibited from making electioneering communications. Because the restrictions exist within the ambit of section 441b, the Wellstone amendment does not restrict unincorporated 501(c)(4) and 527 organizations from making electioneering communications.

An initial reading of the Wellstone amendment suggests that it may go further than allowed by *MCFL,* in that it bans electioneering communications from all section 501(c)(4) corporations. In order to interpret the Wellstone amendment consistent with *MCFL,* an exception to the ban on corporations making electioneering communications should apply to section 501(c)(4) corporations that meet the conditions

[6] During the Senate debate, Senator McCain described these provisions as intended to be consistent with *FEC* v. *Massachusetts Citizens for Life, Inc.,* 479 U.S. 238 (1986) (''*MCFL*''). 148 Cong. Rec. S2141 (daily ed. mar. 20, 2002).

for *MCFL* groups at 11 CFR 114.10. Proposed 11 CFR 114.2(b)(2) would ban only electioneering communications by incorporated section 501(c)(4) organizations that do not meet the 11 CFR 114.10 conditions.

Alternatively, in the absence of the Wellstone amendment, the Snowe-Jeffords provision by itself would have allowed all incorporated tax-exempt organizations that are described in 26 U.S.C. 501(c)(4), and political organizations described in 26 U.S.C. 527, to make electioneering communications, provided their funds do not come from corporations or labor organizations. 2 U.S.C. 441b(c).

II. Proposed Rules at 11 CFR 114.2, 114.10, and 114.14

To implement the new restrictions on corporate and labor organization activity, current 11 CFR 114.2(b) would be revised to reflect the restrictions found in the Snowe-Jeffords provision and the Wellstone amendment. For purposes of clarity, current paragraph 114.2(b) would be restructured. The general prohibition on corporations and labor organizations making contributions would be placed in proposed paragraph 114.2(b)(1). The corresponding prohibitions on corporate and labor organization expenditures would be located in paragraph (b)(2)(i). The restriction on express advocacy by corporations and labor organizations to those outside the restricted class would be moved to proposed paragraph 114.2(b)(2)(ii). Proposed paragraph 114.2(b)(2)(iii) would contain the new prohibition on electioneering communications by corporations and labor organizations.

Current paragraph 114.2(b) references the exception at 11 CFR 114.10 for qualified nonprofit corporations that wish to make independent expenditures. As redrafted, the reference to section 114.10 would also apply to electioneering communications.

Section 114.10 itself would be redrafted to incorporate references to electioneering communications. Thus, the title of section 114.10 would be redrafted to reflect its application to electioneering communications, as would the discussion of the scope of section 114.10 found at paragraph 114.10(a). Current paragraph 114.10(d) would be redesignated as ''Permitted corporate independent expenditures and electioneering communications.'' Current paragraph 114.10(d)(2) would be redesignated as proposed paragraph 114.10(d)(3). Proposed paragraph 114.10(d)(2) would track the language of current paragraph 114.10(d)(1), except that it would substitute ''electioneering communication'' for ''independent expenditure,'' and it would reference the definition of ''electioneering communication'' at 11 CFR 100.29.

The procedures for certification of qualified nonprofit corporation status would be revised to provide separate procedures for those making electioneering communications. Thus, the procedures for corporations making independent expenditures, which are currently found at 11 CFR 114.10(e)(1)(i), and (ii), would be redesignated as 11 CFR 114.10(e)(1)(i)(A) and (B). Proposed 11 CFR 114.10(e)(1)(ii)(A) and (B) would be added to describe the procedures for demonstrating qualified nonprofit corporation status when making electioneering communications. In all respects this provision is similar to the one for qualified nonprofit corporations making independent expenditures, except that the threshold for certification would be $10,000. The amount would be set at $10,000 because that is the amount that first triggers the reporting requirement for electioneering communications.

Further, 11 CFR 114.10(g) would be revised to require qualified nonprofit corporations to comply with the requirements of 11 CFR 110.11 regarding non-authorization notices (''disclaimers'') when making electioneering communications. BCRA amended 2 U.S.C. 441d to require disclaimers for electioneering communications. Section 110.11 will be amended in a separate rulemaking.

Proposed paragraph 114.10(h) would serve as a notification to qualified nonprofit corporations that they may establish a segregated bank account for the purpose of depositing funds to be used to pay for electioneering communications, as identified in 11 CFR 104.19(b)(6) and (7).

Proposed paragraph 114.10(i) would track the language in 2 U.S.C. 441b(c)(5), which states that nothing in 2 U.S.C. 441b(c) shall be construed to authorize an organization exempt from taxation under section 501(a) of the Internal Revenue Code of 1986 to carry out any activity that is prohibited under the Internal Revenue Code. For the reasons explained above, the proposed rule would clarify that this statutory prohibition specifically applies to any qualified nonprofit corporation.

Certain courts have interpreted *MCFL* to allow an incorporated 501(c)(4) organization to accept a *de minimis* amount of corporate or labor organization funds and still be able to make independent expenditures without violating 2 U.S.C. 441b. *See, e.g., Minnesota Citizens Concerned for Life, Inc.* v. *FEC,* 936 F.Supp. 633 (D.Minn. 1996), *aff'd,* 113 F.3d 129 (8th Cir. 1997).[7] Regarding BCRA, the Commission understands that the phrase ''paid for exclusively by funds provided by individuals'' at 2 U.S.C. 441b(c)(2), when read in conjunction with the Wellstone amendment at 2 U.S.C. 441b(c)(6)(A), is intended to establish a bright-line rule that, even if an organization accepted only a *de minimis* amount of corporate or labor organization funds, it is nevertheless barred under 2 U.S.C. 441b from making an electioneering communication. The Commission seeks comment as to whether the conclusion regarding acceptance of *de minimis* amounts of corporate or labor organization general treasury funds is appropriate and likely to survive constitutional scrutiny and, if so, whether it should be stated in the rule. Comment is sought, however, as to whether the certification of its status under 11 CFR 114.10(e) as a qualified nonprofit corporation should be revised for purposes of making either independent expenditures or electioneering communication so that a corporation could certify its status on the basis of a court decision rather than the criteria in the Commission's regulations.

Further, proposed 11 CFR 114.14 would be added to the regulations to implement the provisions in 2 U.S.C. 441b(b)(2), (c)(1) and (c)(3) prohibiting corporations and labor organizations from directly or indirectly disbursing any amount from general treasury funds for any of the costs of an electioneering communication.[8] Proposed 11 CFR 114.14(a) would contain the prohibition that applies to corporations and labor organizations generally, and is meant to eliminate any instance of a corporation or labor organization providing funds out of their general treasury funds for the purpose of paying for an electioneering communication, including through a non-Federal account. The Commission does not view

[7] Prior to enactment of BCRA, the *MCFL* status of incorporated 501(c)(4) organizations could change from year to year depending on the absolute total amount of corporate contributions received by these organizations. *FEC* v. *National Rifle Association,* 254 F.3d 173 (D.C. Cir 2001). In *FEC* v. *NRA,* the court held that $1000 in corporate contributions that the NRA received in 1980 was *de minimis* and did not affect in *MCFL* status for that year; however, the corporate contributions of $7,000 and $39,786 that it received in 1978 and 1982, respectively, were substantial and rendered the NRA ineligible for the *MCFL* exemption in 1978 and 1982. *Id.* at 192.

[8] The prohibition on direct disbursements of corporate or labor organization funds is contained at proposed new 11 CFR 114.2(b)(2). National banks would also be subject to proposed 11 CFR 114.14 through the operation of current 11 CFR 114.2(a)(2).

BCRA as in any way prohibiting or restricting corporations and labor organizations from paying for electioneering communications out of funds raised and spent by the Federal accounts of their separate segregated funds. The Commission seeks comment on what factors should be used to determine that the purpose element of this prohibition has been met.

Proposed paragraph (b) of new 11 CFR 114.14 would prohibit any person who accepts corporate or labor organization funds from using those funds to pay for an electioneering communication, or to provide those funds to any other person who would subsequently use those funds to pay for all or part of the costs of an electioneering communication. This proposed rule would be similar to the ban on contributions made in the name of another. *See* 2 U.S.C. 441f; 11 CFR 110.4(b). The rule would be intended to effectuate BCRA's treatment of an electioneering communication as being made by a corporation or labor organization if such an entity indirectly disburses any amount for the cost of the communication out of their general treasury funds. 2 U.S.C. 441b(c)(3)(A).

The Commission also seeks comments on contributor liability. Should contributors be held liable in instances where their contributions were not intended to be used for electioneering communications but the recipient used them for that purpose regardless of the contributors' intent?

Proposed paragraph (c) of 11 CFR 114.14 would provide certain limited exceptions to allow corporations or labor organizations to provide funds that might subsequently be used for electioneering communications. The first exception would cover salary, royalties, or any other income earned from *bona fide* employment or other contractual arrangements, including a pension or other retirement income. The second exception would cover interest earnings, stock or other dividends, or proceeds from the sale of stock or other investments. These exceptions are drawn from 11 CFR 110.10, which applies only to candidates' funds, by recognizing that such amounts constitute personal funds. The third proposed exception covers a corporation or labor organization payment of the fair market value for goods provided or services rendered to the corporation or labor organization.

Proposed paragraph 11 CFR 114.14(d) would require persons who receive funds from a corporation or a labor organization that do not meet the exceptions of proposed paragraph 11 CFR 114.14(c) to be able to demonstrate through a reasonable accounting method that no such funds were used to pay for any portion of an electioneering communication. The Commission seeks comment on whether a specific accounting method should be required, such as first-in-first-out (FIFO), last-in-first-out (LIFO), or any other method.

The Commission seeks comment on whether proposed 11 CFR 114.14 covers all instances where corporate or labor organization general treasury funds might indirectly be used to pay for electioneering communications, without going beyond the bounds of BCRA.

Are Amounts Given to Persons Making Electioneering Communications Contributions? When Are These Amounts Subject to the Contribution Limits? Would They Trigger Political Committee Status?

In the new reporting provisions of BCRA, monies provided for electioneering communications are characterized as ''funds contributed,'' and the persons providing the monies as ''contributors.'' 2 U.S.C. 434(f)(2)(E) and (F). BCRA amends the FECA's prohibitions against corporate and labor organization contributions and expenditures at 2 U.S.C. 441b(b)(2) by defining ''contribution or expenditure'' to include ''any direct or indirect payment * * * for any applicable electioneering communication.'' It also amends the ban on contributions and donations by foreign nationals at 2 U.S.C. 441e to include electioneering communications. BCRA, however, does not amend the definition of contribution at 2 U.S.C. 431(8) to include monies given for electioneering communications. The Commission would interpret this statutory language to mean that such monies would be ''contributions'' when provided by any person to the Federal account of a political organization and, therefore, would be subject to the contribution limits and prohibitions of the FECA, as amended by BCRA. However, funds provided to persons that are *not* political committees would not be ''contributions'' and hence would not be subject to the contribution limits or prohibitions. Nor would these amounts trigger political committee status when given to an organization that is not already a political committee. Please note that amounts donated by an entity covered by 2 U.S.C. 441b or by a foreign national covered by 2 U.S.C. 441e nonetheless are subject to the bans on electioneering communications contained in those provisions. The Commission requests comments on this approach.

BCRA also prohibits the national party committees from donating non-Federal funds for any purpose, including electioneering communications. 2 U.S.C. 441i(a). BCRA prohibits a State, district, or local committee of a political party from donating non-Federal funds for ads that refer to a clearly identified candidate for Federal office and promote, support, attack or oppose that candidate. 2 U.S.C. 431(20)(A)(iii) and 441i(b). Such ads, with rare exception, encompass electioneering communications. For these reasons, the Commission would interpret monies provided by any person for electioneering communications to political committees that are the national, State, district or local committee of a political party (''party committees'') to be contributions subject to the limitations or prohibitions of the FECA, as amended by BCRA. However, comments are sought as to whether funds provided for electioneering communications to a non-Federal account of a separate segregated fund or a non-connected committee should or should not be contributions subject to limitations or prohibitions, if the funds are not provided by a corporation, labor organization, foreign national or party committee, and if they are not coordinated with any candidate.

Funds provided by persons other than corporations, unions, foreign nationals or party committees to persons that are not political committees are not contributions. Thus, these amounts would not trigger political committee status when given to an organization that is not already a political committee. Persons that are not party committees or political committees, including individuals, would be able to raise and spend funds for electioneering communications without limitation as to amount, unless the funds are provided by corporations, unions, foreign nationals or party committees. The Commission requests comments on this approach.

Who Must Report Electioneering Communications?

I. Who Is Included in ''Persons''?

BCRA, as codified at 2 U.S.C. 434(f)(1), requires all *persons* making electioneering communications to file statements when the disbursements for the electioneering communications exceed $10,000 in a calendar year. Under 2 U.S.C. 431(11) and 11 CFR 100.10, ''persons'' includes ''an individual, partnership, committee, association, corporation, labor organization, and any other organization or group of persons.'' This definition of

''person'' would apply to proposed 11 CFR 104.19(a).

While all political committees are included as ''persons'' who would be required to report electioneering communications under proposed section 104.19(a), BCRA excludes communications that constitute an expenditure or an independent expenditure under FECA from the definition of electioneering communications. 2 U.S.C. 434(f)(3)(B)(ii). Thus, political committees will not be required to report their expenditures as electioneering communications.

The Commission seeks comments on eliminating this exemption when the authorized committee of a candidate makes an expenditure for a communication that refers to that candidate or that candidate's opponent. Under this approach, which is not included in the proposed rules that follow, if a candidate committee makes an expenditure for a communication that refers to that candidate or that candidate's opponent and that meets the definition of electioneering communication (other than the exclusion of expenditures in 2 U.S.C. 434(f)(3)(B)(ii)), then the candidate committee would have to report the cost as an electioneering communication within the 24-hour time requirement, if the costs of such ads exceed $10,000. The Commission recognizes that these amounts would be reported a second time on the authorized committee's regular report as expenditures. Comment is sought as to whether this limitation on the exemption for authorized committees would be consistent with BCRA.

The Commission requests comments on whether State and local party committees should be exempt from ''persons'' who must file reports of electioneering communications. State and local party committees' candidate-specific expenditures and independent expenditures that are otherwise reportable as such are not subject to the definition of electioneering communications under the Commission's construction of 2 U.S.C. 434(f)(3)(B)(ii). *See* above. However, certain other disbursements by a State party committee that include a reference to a clearly identified Federal candidate would be subject to the definition of electioneering communication, such as issue ads that do not require candidate-specific reporting. Exempting State and local party committees from 11 CFR 104.19 would mean that they would report such disbursements on their regular reporting schedule, as current law allows, rather than under the electioneering communications reporting requirements. Comments are requested.

II. Who Is Responsible for Filing Reports by Organizations That Are Not Political Committees?

Under the Commission's regulations at 11 CFR 104.1 and the FECA at 2 U.S.C. 432(i) and 434(a)(1), the treasurer is the individual responsible for the accuracy, and the filing, of a political committee's reports. BCRA requires organizations that are not political committees to report their electioneering communications. 2 U.S.C. 434(f)(2)(E). However, such organizations are not required by BCRA or the FECA to have a treasurer who is responsible for the filing. The Commission requests comments on whether to require that the individual responsible for filing the statement of electioneering communications on behalf of an organization that is not a political committee have actual knowledge of the receipts and disbursements for, and the contents and timing of, the electioneering communications.

When Must Electioneering Communications Be Reported?

The question of when electioneering communications must be reported presents several subsidiary issues. First, does the $10,000 threshold include the costs for producing electioneering communications, or for airing electioneering communications, or both? Second, must the electioneering communications be reported at the time the disbursements exceed $10,000 in a calendar year, or not until the disbursements exceed $10,000 *and* the communications have been aired? Third, when does the 24-hour period begin and end, and what would serve as proof of timely filing? These issues are discussed below.

I. Does the $10,000 Reporting Threshold Include the Direct Costs of Both Producing and Airing Electioneering Communications, or Does It Include Only One or the Other?

BCRA requires disbursements, and contracts to make disbursements, for the direct costs of producing *and* airing electioneering communications to be reported within 24 hours of the ''disclosure date.'' 2 U.S.C. 434(f)(1). However, BCRA defines ''disclosure date'' as the date on which the direct costs of producing *or* airing exceed $10,000. 2 U.S.C. 434(f)(4). Thus, the proposed rules would require that when the direct costs of either producing or airing electioneering communications exceed $10,000, the person making the electioneering communications must report the direct costs of both producing and airing the electioneering communications within 24 hours. Specifically, proposed 11 CFR 104.19(a) would require every person who makes disbursements, or who executes contracts to disburse funds for the direct costs of producing or airing electioneering communications aggregating in excess of $10,000, to report certain information regarding the sources of the funds used for producing *and* airing the electioneering communications.

The Commission requests comments on this interpretation. Does BCRA intend for persons to report only if the aggregate production costs or the aggregate airing costs exceed $10,000? For example, if Person K pays $7,000 to produce an electioneering communication and $7,000 to air the communication, would Person K have any reporting requirements at all because neither the cost of production nor the cost of airing the communication when treated separately exceeded $10,000? Alternatively, does the statute intend for persons to report when the aggregate of all direct production costs *and* all direct airing costs exceed $10,000? For example, if Person J pays $7,000 to produce an electioneering communication and pays $7,000 to air it, would Person J be required to report all $14,000 because the aggregate costs of producing and airing exceed $10,000?

Proposed paragraph (a)(2) would provide guidance with regard to what are considered to be direct costs of producing or airing an electioneering communication. The proposed regulation would provide a list of costs that would be considered ''direct.'' The list would not be exhaustive. As proposed, the direct costs of producing a communication would include any costs charged by a production company, such as studio rental time, staff salaries, costs of video or audio recording media, hired talent, and any other cost involved in producing the video or audio communication. Direct costs of airtime would include the cost of airtime on broadcast, cable or satellite radio and television stations, and the charges for a broker to purchase the airtime. The Commission seeks comments on other examples of direct costs of producing or airing electioneering communications.

Direct costs for producing or airing electioneering communications would not include the cost of polling to determine the contents of a communication or whether to create or air the communication. Additionally,

such costs would not include the cost of a focus group or other polling to determine the effectiveness of the communication. The Commission seeks comment on whether these exceptions should be specifically included in the rules and what other types of costs should be excluded from ''direct costs.'' Further, the Commission seeks comment on whether these lists should be exhaustive, thereby including everything that would be considered a direct cost.

II. Must Reports Be Filed When the Disbursements Exceed the Threshold, or When the Electioneering Communication Is Aired?

As noted above, BCRA requires persons making electioneering communications to report the disbursements for such communications within 24 hours of the ''disclosure date.'' 2 U.S.C. 434(f)(1). ''Disclosure date'' is defined at 2 U.S.C. 434(f)(4) as the date ''during any calendar year by which a person has made disbursements for the direct costs of producing or airing electioneering communications aggregating in excess of $10,000.'' Therefore, proposed 11 CFR 104.19(a) would track the statutory language to require that statements of electioneering communications be filed within 24 hours of the time the $10,000 threshold is exceeded. Following the statutory language, proposed paragraph (a) would require that persons begin aggregating the direct costs of producing or airing electioneering communications anew after each disclosure date. Each time the aggregation of disbursements for electioneering communications exceeds $10,000 (since the most recent disclosure date), an additional statement of electioneering communications would be required.

Alternatively, the Commission could determine that a person makes disbursements for electioneering communications only when a communication is aired, and require reporting of disbursements that meet the statute's monetary thresholds at that time. One policy reason supporting such an interpretation is the practical difficulty or impossibility of determining whether a given communication has met BCRA's targeting requirements before a communication is actually aired. Another reason is that until a person or entity actually airs an electioneering communication, it is impossible to know with certainty that the person or entity ever will air a communication that constitutes an electioneering communication under BCRA; accordingly, to require reporting beforehand could lead to speculative and even inaccurate reporting through no fault of the reporting person or entity. Finally, there could be constitutional issues with compelling disclosure of potential electioneering communications before they are finalized and aired, particularly when such disclosure could force reporting entities to divulge confidential strategic and political information, and could force them to report information, under the penalty of perjury, that later turns out to be misleading or inaccurate if the reporting entity does not subsequently air any electioneering communications. The Commission seeks comments on these issues and specifically whether, in light of these constitutional and policy concerns, it should consider construing BCRA's electioneering communication reporting requirements to apply only when an electioneering communication is actually aired. The Commission further requests comments on whether it should limit reporting of electioneering communications to only the 30 days before a primary election or the 60 days before a general election.

The current rules at 11 CFR 104.5 set forth filing dates for each type of filer (*e.g.,* authorized committees, unauthorized committees, party committees) and for other required reports that are not part of the regular filing schedule (*e.g.,* certain reports of independent expenditures). Proposed new paragraph (i) of section 104.5 would state the filing deadlines for 24-hour statements of electioneering communications and would cross-reference proposed section 104.19.

BCRA at 2 U.S.C. 434(f)(2) requires, as do the proposed regulations at 11 CFR 104.5(i), that statements of electioneering communications be filed under penalty of perjury. Note that 24-hour reports of independent expenditures are also required to be filed under penalty of perjury.[9] Perjury consists of a false statement as to material fact willfully made under an oath authorized by a law of the United States taken before a competent tribunal, officer, or person. 28 U.S.C. 1621. In addition, 18 U.S.C. 1001(a)(3) establishes criminal penalties for ''knowingly and willfully making or using false writings or documents'' in connection with matters within the jurisdiction and before a government agency. Lastly, such violations may be subject to the FECA at 2 U.S.C. 437g, which establishes civil penalties of specified amounts for violations of the FECA. The Commission seeks comment on how 2 U.S.C. 437g would apply to violations of the requirements for electioneering communications, given that the defined terms in 2 U.S.C. 437g are different than the terms used in 2 U.S.C. 434(f).

III. Filed Within 24 Hours vs. Received Within 24 Hours

Under 2 U.S.C. 434(f)(1), electioneering communications must be reported within 24 hours of the time the $10,000 threshold is exceeded (i.e., on the ''disclosure date'', *see* below). The Commission proposes to add new paragraph (f) to 11 CFR 100.19 to require these 24-hour statements to be *received* by the Commission within 24 hours of the disclosure date, rather than *filed* within 24 hours of the disclosure date. In addition, to assist filers with meeting this deadline, the proposed rule would allow them to file their 24-hour statements by facsimile machine or e-mail. This proposed paragraph would follow the timing and filing methods of 24-hour reports for independent expenditures. The Commission proposes this interpretation to achieve the kind of disclosure contemplated by the 24-hour requirement. Under the proposed rules, a 24-hour statement of electioneering communications would be available to the public no later than 48 hours after its receipt by the Commission. Further, since these statements are required within 24-hours of the disclosure date, they are similar to 24-hour reports of independent expenditures and, thus, should be treated similarly. The Commission requests comments on this interpretation of ''filed'' in 2 U.S.C. 434(f).

The Commission recently concluded that sending 24-hour reports of independent expenditures by mail is not a viable option because it is unlikely that these reports will be received by the Commission within 24 hours of the making of the independent expenditure. (See Explanation and Justification for Independent Expenditure Reporting Rules, 65 FR 12834, March 20, 2002.) Thus, current paragraph (b) of 11 CFR 100.19 does not allow 24-hour reports of independent expenditures to be considered filed when postmarked, even if sent by registered or certified mail. These reports are only considered

[9] Like independent expenditure reporting, one concern regarding reporting expenditures for communications before the communications are publicly disseminated, is the possibility that the report will be erroneous if the communication is never publicly disseminated. Thus, if a person pays more than $10,000 for the production or airing of an electioneering comunication and properly reports those payments within 24 hours, but later decides not to air the ad, that person would not have committed perjury as long as the report reflected what the person knew to be true at the time it was filed.

timely filed if they are received by the Commission or Secretary of the Senate within 24 hours of the time the independent expenditure was made. For the same reasons, the Commission is also proposing to amend paragraph (b) to preclude filing 24-hour statements of electioneering communications by certified or registered mail. However, as explained above, these statements could be filed by facsimile machine or electronic mail, except by those persons who are required to file electronically under 11 CFR 104.18.

In addition to the substantive revisions noted above, all paragraphs in section 100.19 would be given titles to assist the reader in finding the appropriate information, and technical changes would be made to paragraph (d).

IV. When Does the 24 Hour Period Begin and End?

The Commission currently considers the term ''24 hours'' with regard to certain reports of independent expenditures to mean 24 contiguous hours even if the time period begins or ends on a weekend or holiday. The proposed rules would interpret the 24-hour reporting requirement for statements of electioneering communications the same way, since neither FECA nor BCRA appear to contemplate a different result. Both facsimile and electronic mail transmissions may be filed at any time and have a date and time stamp embedded for purposes of proof. However, the Commission requests comments on whether to use a different interpretation of ''24 hours'' for electioneering communications than is currently used for 24-hour reports of independent expenditures. For example, if the $10,000 threshold is exceeded on a Saturday at 5 p.m., should the statement be filed by Sunday at 5 p.m. or Monday at 5 p.m.? Would it be confusing to filers if this rule were different for electioneering communication statements than for other notices, statements or reports?

The Commission also requests comments on how a person should prove that he or she timely sent these 24-hour statements. For example, if reports were sent by fax, would a copy of the sender's fax cover page containing the date and time of the transmission be sufficient to prove timely receipt?

What Information Must Be Reported About Electioneering Communications?

BCRA at 2 U.S.C. 434(f)(2) requires that all persons making electioneering communications report the funds spent on those communications. This new statute is very specific regarding the types of information that must be reported. Consequently, the proposed rules at 11 CFR 104.19 would closely follow the statutory reporting requirements for ''electioneering communications.'' These new 24-hour statements will require the Commission to create a new form for reporting electioneering communications. The Commission intends to create FEC Form 9 for persons other than political committees and to create Schedule J as part of FEC Form 3, 3X, or, 3P, as appropriate, for political committees. These forms would be available on the Commission's website and by Faxline.

Proposed 11 CFR 104.19(a) is discussed above. (*See* Who must report electioneering communications? When must electioneering communications be reported?)

Proposed 11 CFR 104.19(b) would specify the contents of the statement required under BCRA and the proposed rules. Because BCRA quite specifically addresses the contents of these statements, the proposed rules closely follow the statutory language. *See* 2 U.S.C. 434(f)(2). As discussed above, both BCRA and the proposed rules would require that these 24-hour reports be filed under the penalties for perjury.

Proposed paragraph (b)(1) would require the identification[10] of the person making the disbursement(s) for electioneering communications. If the person making the disbursement is not an individual, proposed paragraph (b)(1) would also require the person's principal place of business.

Proposed paragraph (b)(2) would require the identification of any person sharing or exercising direction or control over the activities of the person making the disbursement. The Commission requests comments as to whether ''direction or control over the activities'' should be further defined, and if so, what types of actions would constitute ''direction or control over the activities?''

The Commission also seeks comment on whether it should draw upon in whole or in part its existing earmarking regulations, 11 CFR 110.6(d), in determining the scope of the statutory phrase ''direction or control.'' These rules provide that if a conduit exercises any direction or control over the choice of the recipient candidate, the earmarked contribution shall be considered a contribution by both the original contributor and the conduit for both limitation and reporting purposes. The Commission determined that a conduit exercised direction over a contribution when it determined whether a contribution should be made, and, if so, the recipient, the amount, and the timing of any contribution. *See* Advisory Opinion (''AO'') 1986–4. In two other AOs, the Commission determined that conduits did not exercise direction or control over a contribution when the original contributor made the same choices. *See* AO 1981–57 and AO 1980–46. The Commission seeks comment on whether a similar analysis should be used to define ''direction and control'' in this rulemaking.

The recently promulgated regulations on non-Federal funds (67 FR 49063 (July 29, 2002)) contained a definition of ''direct'' with regard to the making of contributions. That regulation defines ''to direct'' as ''to ask a person who has expressed an intent to make a contribution, donation, or transfer of funds, or to provide anything of value, to make that contribution, donation, or transfer of funds, or to provide that thing of value, including through a conduit or intermediary.'' 11 CFR 300.2(n). The Commission requests comments as to whether this definition of ''to direct'' could be adopted for purposes of this rulemaking as the definition of ''direction.'' The Commission further requests comments on whether ''direction'' and ''control'' should have the same meaning and, if not, what the distinction is.

Another issue that might be addressed is whether direction or control should be limited to influence over certain aspects of the electioneering communications (*e.g.,* the contents, timing, frequency, duration or intended audience of the communication, or the specific media outlet used). In the alternative, should these terms encompass all activities of the person making the electioneering communication, even when those activities are not related to the electioneering communication? This approach is reflected in Alternative 4–B of the proposed rule at 11 CFR 104.19(b)(2).

The Commission requests comments on these issues as well as any other issues relevant to this point.

Proposed paragraph (b)(3) would require the identification of the custodian of the books and accounts of the person or persons making the disbursements.

Proposed paragraph (b)(4) would require the amount of each

[10] 11 CFR 100.12 defines ''identification'' as: ''in the case of an individual, his or her full name, including: First name, middle name or initial, if available, and last name; mailing address; occupation; and the name of his or her employer; and, in the case of any other person full name and address.''

disbursement of more than $200 during the period covered by the statement, the date the disbursement was made, and the identification of the person to whom the disbursement was made.

Alternative 5–A of proposed paragraph (b)(5) would closely track the wording of BCRA by requiring the identification of all elections to which the electioneering communications pertain and the names (if known) of the candidates clearly identified or to be clearly identified in the communication. Alternative 5–B of proposed paragraph (b)(5) would require disclosure of all clearly identified candidates referred to in the communication and the elections in which they are candidates. The Commission seeks comment on whether Alternative 5–B is preferable to the statutory language, in that it is easier to follow and takes into consideration 2 U.S.C. 434(f)(3), which makes reference to a clearly identified candidate a threshold requirement for a communication to be deemed an electioneering communication.

Proposed paragraph (b)(6) would apply only to qualified nonprofit corporations under 11 CFR 104.10 that pay for electioneering communications only from a segregated bank account under 11 CFR 114.10(h). This proposed paragraph follows 2 U.S.C. 434(f)(2)(E) by providing that if a qualified nonprofit corporation pays for its electioneering communications only from its segregated bank account, it must report the name and address of only those individuals who provided $1,000 or more to the account, aggregating from January 1 of the preceding calendar year. If a qualified nonprofit corporation pays for its electioneering communications from any account other than its segregated bank account, it would be required to report *all* contributors who contributed $1,000 or more to the organization in general (as opposed to the segregated bank account for electioneering communications) under proposed paragraph (b)(7). Proposed paragraph (b)(7) would apply to qualified nonprofit corporations that pay for electioneering communications from an account other than that described in 11 CFR 114.10(h), and to all other persons who make electioneering communications.

Proposed paragraph (b)(7) would follow 2 U.S.C 434(f)(2)(F) by requiring the name and address of any contributor who contributed an amount aggregating $1,000 or more since the first day of the preceding calendar year to the person making the disbursement. Note that BCRA also requires the name and addresses of every U.S. citizen, U.S. national, or permanent resident contributing $1,000 or more to ''a segregated bank account.'' *See* 2 U.S.C. 434(f)(2)(E). Sections 434(f)(2)(E) and 441b(c)(3)(B) of FECA, when read together, appear to contemplate that this segregated bank account is required only for section 501(c)(4) corporations. However, as explained above, section 501(c)(4) corporations (with the possible exception of qualified nonprofit corporations under *MCFL*) are prohibited from making electioneering communications. Therefore, the Commission proposes to omit this information from the required contents of reports, for all persons except qualified nonprofit corporations. Comments are sought on this approach.

In following 2 U.S.C. 434(f)(2)(E) and (F), proposed 11 CFR 104.19(b)(6) and (7) would require the identification of those persons who have contributed in excess of $1,000 since January 1 of the preceding calendar year. The Commission requests comments on whether to require all donations from these donors to be itemized every time the person making the electioneering communication files reports even if some of them were previously reported. An alternative would be to require the itemization of these funds in the same way that contributions are currently itemized under 11 CFR 104.8 on Schedule A. Thus, each time a person provides funds to the person making the electioneering communications, the filer would report the receipts but would not be required to itemize them until they aggregate in excess of $1,000. However, for each contribution/donation thereafter, the filer would be required to report the ''to-date'' total along with the itemization of any *new* funds provided by that donor since the last report, but the filer would not be required to re-report previous contribution/donations in each subsequent report. The Commission envisions that this alternative would require FEC Form 9 and Schedule J to contain space for reporting donations that would be similar to the current Schedule A. Comments are requested on this approach and on other possible methods of implementation of 2 U.S.C. 434(f)(2)(E) and (F) to avoid duplicative reporting.

Proposed paragraph (b)(8) would require the reporting of the disclosure date, as defined in proposed 11 CFR 104.19(a)(1). While BCRA does not specifically require the disclosure date to be reported, the Commission notes the necessity of this information as the triggering mechanism for filing the statement. This is similar to requiring the date an independent expenditure aggregating in excess of $1,000 is made during the 24-hour reporting period. The Commission requests comments on whether or not to require persons making electioneering communications to report the disclosure date.

Proposed paragraph (c) would require all persons (except qualified nonprofit corporations) making electioneering communications or accepting contributions for the purpose of making electioneering communications to comply with the Commission's current recordkeeping regulations at 11 CFR 104.14. Qualified nonprofit corporations would be exempt from the recordkeeping requirements in order to mirror the requirements for such entities that make independent expenditures. The Commission seeks comment on what records should be required to be maintained by persons who make electioneering communications. Should the recordkeeping requirements for electioneering communications and independent expenditures be the same? If so, what should those requirements be?

Where Must Electioneering Communications Statements Be Filed?

Currently, the FECA and 11 CFR 105.2 require that reports by, and solely regarding, candidates for the U.S. Senate be filed with the Secretary of the Senate as custodian for the Commission. BCRA requires that statements of electioneering communications that refer to Senate candidates must be filed with the Commission. 2 U.S.C. 434(f)(1). Therefore, proposed revisions to 11 CFR 105.2 would renumber the current section 105.2 as paragraph 105.2(a) under the heading of ''General rule.'' Proposed new paragraph (b) would contain the exceptions to that rule, *i.e.,* persons who make electioneering communications that refer to candidates for Senate would report to the Commission rather than to the Secretary of the Senate. BCRA also requires that all 24-hour and 48-hour reports of independent expenditures be filed with the Commission regardless of whether they support or oppose a candidate for Senate. 2 U.S.C. 434(g)(3)(A). These independent expenditure reports would be added to revised section 105.2 in a separate rulemaking at a later point.

Certification of No Effect Pursuant to 5 U.S.C. 605(b) (Regulatory Flexibility Act)

The Commission certifies that these proposed rules, if promulgated, would not have a significant economic impact on a substantial number of small entities. The basis of this certification is that since all political committees already have reporting requirements,

these additional statements do not create a significant new burden. Persons other than political committees would not have to report until they exceed a $10,000 threshold, at which point their reporting obligations would be no more than what is strictly necessary to comply with the new statutory requirements. In addition, they would have considerable flexibility in the method of filing the requisite statement.

List of Subjects

11 CFR Part 100

Elections.

11 CFR Part 104

Campaign funds, Political committees and parties, Reporting and recordkeeping requirements.

11 CFR Part 105

Campaign funds, Political candidates, Political committees and parties, Reporting and recordkeeping requirements.

11 CFR Part 114

Business and industry, Elections, Labor.

For the reasons set out in the preamble, it is proposed to amend subchapter A of chapter I of title 11 of the *Code of Federal Regulations* as follows:

PART 100—SCOPE AND DEFINITIONS (2 U.S.C. 431)

1. The authority citation for part 100 would continue to read as follows:

Authority: 2 U.S.C. 431, 434, and 438(a)(8).

2. Paragraphs (b) and (d) of section 100.19 would be revised, titles would be added to paragraphs (a), (c), and (e), and paragraph (f) would be added to read as follows:

§ 100.19 File, filed or filing (2 U.S.C. 434(a)).

* * * * *

(a) *Where to deliver reports.* * * *

(b) *Timely filed. General rule.* A document, other than a report or statement covered by paragraphs (c) through (f) of this section, is timely filed upon deposit as registered or certified mail in an established U.S. Post Office and postmarked no later than midnight of the day of the filing date, except that pre-election reports so mailed must be postmarked no later than midnight of the fifteenth day before the date of the election. Documents sent by first class mail must be received by the close of business on the prescribed filing date to be timely filed.

(c) *Electronic filing.* * * *

(d) *24-hour reports of independent expenditures.* A 24-hour report of independent expenditures under 11 CFR 104.4(b) or 109.2(c) is timely filed when it is received by the appropriate filing officer as listed in 11 CFR 104.4(c) after a disbursement is made, or, in the case of a political committee, a debt reportable under 11 CFR 104.11(b) is incurred, for an independent expenditure, but no later than 24 hours from the time the independent expenditure was made. In addition to other permissible means of filing, a 24-hour report of independent expenditures may be filed using a facsimile machine or by electronic mail if the filer is not required to file electronically in accordance with 11 CFR 104.18.

(e) *48-hour statements of last-minute contributions.* * * *

(f) *24-hour statements of electioneering communications.* A 24-hour statement of electioneering communications under 11 CFR 104.19 is timely filed when it is received by the Commission within 24 hours of the disclosure date (*see* 11 CFR 104.19(a)(1)). In addition to other permissible means of filing, a 24-hour statement of electioneering communications may be filed using a facsimile machine or by electronic mail if the filer is not required to file electronically in accordance with 11 CFR 104.18.

3. New section 100.29 would be added to read as follows:

§ 100.29 Electioneering communication.

(a)(1) *Electioneering communication* means any broadcast, cable, or satellite communication that:

(i) Refers to a clearly identified candidate for Federal office;

(ii) Is publicly distributed within 60 days before a general election for the office sought by the candidate; or within 30 days before a primary or preference election, or a convention or caucus of a political party that has authority to nominate a candidate, for the office sought by the candidate;

(iii) Is targeted to the relevant electorate, in the case of a candidate for Senate or the House of Representatives; and

Alternative 1–A

(iv) In the case of a candidate for nomination for President:

(A) Can be received by 50,000 or more persons in a State where a primary election, as defined in 11 CFR 9032.7, is being held if publicly distributed within 30 days before the election; or

(B) Can be received by 50,000 or more persons anywhere in the United States if publicly distributed within 30 days before the national nominating convention.

(2) For purposes of this section only, a special election or a runoff election is a primary election if held to nominate a candidate. A special election or a runoff election is a general election if held to elect a candidate.

(b) For purposes of this section—

(1) *Refers to a clearly identified candidate* means that the candidate's name, nickname, photograph, or drawing appears, or the identity of the candidate is otherwise apparent through an unambiguous reference such as ''the President,'' ''your Congressman,'' or ''the incumbent,'' or through an unambiguous reference to his or her status as a candidate such as ''the Democratic presidential nominee'' or ''the Republican candidate for Senate in the State of Georgia.''

(2) *Broadcast, cable, or satellite communication* means a communication that is publicly distributed by a television station, radio station, cable television system, or satellite system, but does not include any communication publicly distributed exclusively by Low Power FM Radio, Low Power Television or Citizens Band Radio, as those terms are defined by the Federal Communications Commission.

(3) *Targeted to the relevant electorate* means the communication can be received by 50,000 or more persons—

(i) In the district the candidate seeks to represent, in the case of a candidate for Representative in or Delegate or Resident Commissioner to, the Congress; or

(ii) In the State the candidate seeks to represent, in the case of a candidate for Senator.

Alternative 1–B

(4) A communication that refers to a clearly identified candidate for President or Vice-President is publicly distributed within 30 days before a primary election, preference election, or convention or caucus of a political party only where and when the communication can be received by 50,000 or more persons within the State holding such election, convention or caucus.

(5) For purposes of paragraph (b)(3) of this section, information on the number of persons in the congressional district or State that can receive a communication publicly distributed by a television station, radio station, a cable television system, or satellite system, is available on the Federal Communications Commission's website, *http://www.fcc.gov.* A link to that site is available on the Federal Election

Commission's website, *http://www.fec.gov.* It shall be a complete defense against any charge that a communication reached 50,000 or more persons when the maker of an electioneering communication relies on such information posted on the website of the Federal Communications Commission prior to the date the communication is publicly distributed.

(6) *Publicly distributed* means aired, broadcast, cablecast or otherwise disseminated through the facilities of a television station, radio station, cable television system, or satellite system. This definition also applies to the term airing in 11 CFR 104.5 and 104.19.

(c) *Electioneering communication* does not include any communication that:

(1) Is publicly distributed through a means of communication other than a broadcast, cable, or satellite television or radio station. For example, electioneering communication does not include communications appearing in print media, including a newspaper or magazine, handbill, brochure, yard sign, poster, billboard, and other written materials, including mailings; communications over the Internet, including electronic mail; or telephone communications;

(2) Appears in a news story, commentary, or editorial distributed through the facilities of any broadcast, cable, or satellite television or radio station, unless such facilities are owned or controlled by any political party, political committee, or candidate. A news story distributed through a broadcast, cable, or satellite television or radio station owned or controlled by any political party, political committee, or candidate is nevertheless exempt if the news story meets the requirements described in 11 CFR 100.132(a) and (b);

Alternative 2–A

(3) Constitutes an expenditure or an independent expenditure.

Alternative 2–B

(3) Constitutes a candidate-specific expenditure reportable as an in-kind contribution or party coordinated expenditure, or an independent expenditure;

(4) Constitutes a candidate debate or forum conducted pursuant to 11 CFR 110.13, or that solely promotes such a debate or forum and is made by or on behalf of the person sponsoring the debate or forum;

(5) Refers to a bill or law by its popular name where that name includes the name of a Federal candidate, provided that the popular name is the sole reference made to a Federal candidate;

Alternative 3–A

(6) Is devoted exclusively to urging support for or opposition to particular pending legislative or executive matters, where the communication only requests recipients to contact a specific Member of Congress or public official, without promoting, supporting, attacking or opposing the candidate, or indicating the candidate's past or current position on the legislation;

Alternative 3–B

(6) Concerns only a pending legislative or executive matter, and the only reference to a Federal candidate is a brief suggestion that he or she be contacted and urged to take a particular position on the matter, and there is no reference to the candidate's record, position, statement, character, qualifications, or fitness for an office or to an election, candidacy, or voting;

Alternative 3–C

(6)(i) Does not include express advocacy;

(ii) Refers to a specific piece of legislation or legislative proposal, either by formal name, popular name or bill number; or refers to a general public policy issue capable of redress by legislation or executive action; and

(iii) Contains a phone number, toll free number, mail address, or electronic mail address, internet home page or other world wide web address for the person or entity that the ad urges the viewer or listener to contact;

Alternative 3–D

(6) Urges support of or opposition to any legislation, resolution, institutional action, or any policy proposal and only refers to contacting a clearly identified candidate who is an incumbent legislator to urge such legislator to support or oppose the matter, without referring to any of the legislator's past or present positions; or

(7) Refers to a clearly identified Federal candidate in a public communication by a candidate for State or local office, individual holding State or local office, or an association or similar group of candidates for State or local office or of individuals holding State or local office, if such mention of a Federal candidate is merely incidental to the candidacy of one or more individuals for State or local office.

PART 104—REPORTS BY POLITICAL COMMITTEES (2 U.S.C. 434)

4. The authority citation for part 104 would continue to read as follows:

Authority: 2 U.S.C. 431(1), 431(8), 431(9), 432(i), 434, 438(a)(8) and (b) and 439a.

5. In section 104.5, paragraph (j) would be added as follows:

§ 104.5 Filing dates (2 U.S.C. 434(a)(2)).

* * * * *

(j) *24-hour statements of electioneering communications.* Every person who makes a disbursement or executes a contract to make a disbursement for the direct costs of producing or airing electioneering communications as defined in 11 CFR 100.29 aggregating in excess of $10,000 during any calendar year shall, within 24 hours of each disclosure date, file with the Commission a statement under penalty of perjury in accordance with 11 CFR 104.19.

6. New section 104.19 would be added to read as follows:

§ 104.19 Reporting electioneering communications (2 U.S.C. 434(f)).

(a) *Who must report.* Every person who makes a disbursement or executes a contract to make a disbursement for the direct costs of producing or airing electioneering communications as defined in 11 CFR 100.29 aggregating in excess of $10,000 during any calendar year shall, within 24 hours of the disclosure date, file with the Commission a statement under penalty of perjury containing the information set forth in paragraph (b) of this section. Persons other than political committees must file these 24-hour statements on FEC Form 9. Political committees must file these 24-hour statements on Schedule J of FEC Forms 3, 3X, or 3P.

(1) *Disclosure date* means during a calendar year:

(i) The first date by which a person has made one or more disbursements, or has executed one or more contracts to make disbursements, for the direct costs of producing or airing electioneering communications aggregating in excess of $10,000; and

(ii) Any other date in a calendar year by which a person has made one or more disbursements, or has executed one or more contracts to make disbursements, for the direct costs of producing or airing electioneering communications aggregating in excess of $10,000 since the most recent disclosure date during such calendar year.

(2) Direct costs of producing or airing electioneering communications include, but are not limited to, the following:

(i) Costs charged by a production company, such as studio rental time, staff salaries, costs of video or audio recording media, and talent; and

(ii) The cost of airtime on broadcast, cable or satellite radio and television stations, and the charges for a broker to purchase the airtime.

(b) *Contents of statement.* Every person described in paragraph (a) of this section shall disclose the following information:

(1) The identification (*see* 11 CFR 100.12) of the person making the disbursement and, if the person is not an individual, the person's principal place of business;

Alternative 4–A

(2) The identification (*see* 11 CFR 100.12) of any person sharing or exercising direction or control over the electioneering communication activities of the person making the disbursement;

Alternative 4–B

(2) The identification (*see* 11 CFR 100.12) of any person sharing or exercising direction or control over the contents, timing, duration, intended audience, frequency of placement of the electioneering communication or the specific media outlet used;

(3) The identification (*see* 11 CFR 100.12) of the custodian of the books and accounts from which the disbursements for electioneering communications were made;

(4) The amount of each disbursement of more than $200 during the period covered by the statement, the date the disbursement was made, and the identification (as defined in 11 CFR 100.12) of the person to whom that disbursement was made;

Alternative 5–A

(5) All elections to which the electioneering communication pertains and all names (if known) of clearly identified candidates referred to or to be referred to in the communication;

Alternative 5–B

(5) All clearly identified candidates referred to in the communication and the elections in which they are candidates;

(6) If the disbursements are paid out of a segregated bank account of a qualified nonprofit corporation under 11 CFR 114.10(h) consisting of funds provided solely by individuals who are U.S. citizens, U.S. nationals, or who are lawfully admitted for permanent residence under 8 U.S.C. 1101(a)(20), the name and address of each contributor who contributed an amount aggregating $1,000 or more to the segregated bank account, aggregating since the first day of the preceding calendar year;

(7) If the disbursements are not paid out of the segregated bank account of a qualified nonprofit corporation under 11 CFR 114.10(h), the name and address of each contributor who contributed an amount aggregating $1,000 or more to the person making the disbursement, aggregating since the first day of the preceding calendar year; and

(8) The disclosure date as defined in this section.

(c) *Recordkeeping.* All persons, except qualified nonprofit corporations (see 11 CFR 114.10), who make electioneering communications or who accept contributions for the purpose of making electioneering communications, must maintain records in accordance with 11 CFR 104.14.

PART 105—DOCUMENT FILING (2 U.S.C. 432(g))

7. The authority citation for part 105 would be revised to read as follows:

Authority: 2 U.S.C. 432(g), 434, 438(a)(8).

8. Section 105.2 would be revised to read as follows:

§ 105.2 Place of filing; Senate candidates, their principal campaign committees, and committees supporting only Senate candidates (2 U.S.C. 432(g)(2)).

(a) *General rule.* Except as provided in paragraph (b) of this section all designations, statements, reports, and notices as well as any modification(s) or amendment(s) thereto, required to be filed under 11 CFR parts 101, 102, and 104 by a candidate for nomination or election to the office of United States Senator, by his or her principal campaign committee or by any other political committee(s) that supports only candidates for nomination for election or election to the Senate of the United States shall be filed in original form with, and received, by the Secretary of the Senate, as custodian for the Commission.

(b) *Exceptions.* Statements of electioneering communications filed in accordance with 11 CFR 104.19, regardless of whether the communication refers to a candidate for Senate, House of Representatives or President or Vice-President, must be filed in original form with, and received by the Commission.

PART 114—CORPORATE AND LABOR ORGANIZATION ACTIVITY

9. The authority citation for part 114 would continue to read as follows:

Authority: 2 U.S.C. 431(8)(B), 431(9)(B), 432, 434(a)(11), 437d(a)(8), 438(a)(8), 441b.

10. In section 114.2, paragraph (b) would be revised to read as follows:

§ 114.2 Prohibitions on contributions and expenditures.

* * * * *

(b)(1) Any corporation whatever or any labor organization is prohibited from making a contribution as defined in 11 CFR part 100, subpart B. Any corporation whatever or any labor organization is prohibited from making a contribution as defined in 11 CFR 114.1(a) in connection with any Federal election.

(2) Except as provided at 11 CFR 114.10, corporations and labor organizations are prohibited from:

(i) Making expenditures as defined in 11 CFR part 100, subpart D;

(ii) Making expenditures with respect to a Federal election (as defined in 11 CFR 114.1(a)), for communications to those outside the restricted class that expressly advocate the election or defeat of one or more clearly identified candidate(s) or the candidates of a clearly identified political party; or

(iii) Making payments for an electioneering communication to those outside the restricted class.

* * * * *

11. In section 114.10, paragraphs (a), (d), (e) and (g) would be revised and paragraphs (h) and (i) would be added to read as follows:

§ 114.10 Nonprofit corporations exempt from the prohibition on independent expenditures and electioneering communications.

(a) *Scope.* This section describes those nonprofit corporations that qualify for an exemption in 11 CFR 114.2. It sets out the procedures for demonstrating qualified nonprofit corporation status, for reporting independent expenditures and electioneering communications, and for disclosing the potential use of donations for political purposes.

* * * * *

(d) *Permitted corporate independent expenditures and electioneering communications.*

(1) A qualified nonprofit corporation may make independent expenditures, as defined in 11 CFR part 109, without violating the prohibitions against corporate expenditures contained in 11 CFR part 114.

(2) A qualified nonprofit corporation may make electioneering communications, as defined in 11 CFR 100.29, without violating the prohibitions against corporate expenditures contained in 11 CFR part 114.

(3) Except as provided in paragraph (d)(1) and (2) of this section, qualified nonprofit corporations remain subject to the requirements and limitations of 11 CFR part 114, including those

provisions prohibiting corporate contributions, whether monetary or in-kind.

(e) *Qualified nonprofit corporations; reporting requirements.*

(1) *Procedures for demonstrating qualified nonprofit corporation status.*

(i) If a corporation makes independent expenditures under paragraph (d)(1) of this section that aggregate in excess of $250 in a calendar year, the corporation shall certify, in accordance with paragraph (e)(1)(i)(B) of this section, that it is eligible for an exemption from the prohibitions against corporate expenditures contained in 11 CFR part 114.

(A) This certification is due no later than the due date of the first independent expenditure report required under paragraph (e)(2)(i) of this section. However, the corporation is not required to submit this certification prior to making independent expenditures.

(B) This certification may be made either as part of filing FEC Form 5 (independent expenditure form) or, if the corporation is not required to file electronically under 11 CFR 104.18, by submitting a letter in lieu of the form. The letter shall contain the name and address of the corporation and the signature and printed name of the individual filing the qualifying statement. The letter shall also certify that the corporation has the characteristics set forth in paragraphs (c)(1) through (c)(5) of this section.

(ii) If a corporation makes electioneering communications under paragraph (d)(2) of this section that aggregate in excess of $10,000 in a calendar year, the corporation shall certify, in accordance with paragraph (e)(1)(ii)(B) of this section, that it is eligible for an exemption from the prohibitions against corporate expenditures contained in 11 CFR part 114.

(A) This certification is due no later than the due date of the first electioneering communication statement required under paragraph (e)(2)(ii) of this section. However, the corporation is not required to submit this certification prior to making electioneering communications.

(B) This certification must be made as part of filing FEC Form 9 (electioneering communication form).

(2) *Reporting independent expenditures and electioneering communications.*

(i) Qualified nonprofit corporations that make independent expenditures aggregating in excess of $250 in a calendar year shall file reports as required by 11 CFR 109.2.

(ii) Qualified nonprofit corporations that make electioneering communications aggregating in excess of $10,000 in a calendar year shall file statements as required by 11 CFR 104.19.

* * * * *

(g) *Non-authorization notice.* Qualified nonprofit corporations making independent expenditures or electioneering communications under this section shall comply with the requirements of 11 CFR 110.11.

(h) *Segregated bank account.* A qualified nonprofit corporation may, but is not required to, establish a segregated bank account into which it deposits only funds provided by individuals, as described in 11 CFR 104.19(b)(6).

(i) *Activities prohibited by the Internal Revenue Code.* Nothing in this section shall be construed to authorize any organization exempt from taxation under 26 U.S.C. 501(a), including any qualified nonprofit corporation, to carry out any activity that it is prohibited from undertaking by the Internal Revenue Code, 26 U.S.C. 501, *et seq.*

12. Section 114.14 would be added to read as follows:

§ 114.14 Further restrictions on the use of corporate and labor organization funds for electioneering communications.

(a) No corporation or labor organization may give, disburse, donate or otherwise provide funds, the purpose of which is to pay for an electioneering communication, to any other person.

(b) No person who accepts funds given, disbursed, donated or otherwise provided by a corporation or labor organization may use those funds to:

(1) Pay for any electioneering communication; or

(2) Provide any portion of those funds to any person, for the purpose of defraying any of the costs of an electioneering communication.

(c) The prohibitions at paragraphs (a) and (b) of this section shall not apply to funds disbursed by a corporation or labor organization, or received by a person, that constitute—

(1) Salary, royalties, or other income earned from bona fide employment or other contractual arrangements, including pension or other retirement income;

(2) Interest earnings, stock or other dividends, or proceeds from the sale of the person's stocks or other investments; or

(3) Receipt of payments representing fair market value for goods provided or services rendered to a corporation or labor organization.

(d) Persons who receive funds from a corporation or a labor organization that do not meet the exceptions of paragraph (c) of this section must be able to demonstrate through a reasonable accounting method that no such funds were used to pay any portion of an electioneering communication.

Dated: August 2, 2002.

Karl J. Sandstrom,

Vice Chairman, Federal Election Commission.

[FR Doc. 02–19996 Filed 8–6–02; 8:45 am]

BILLING CODE 6715–01–P

DEPARTMENT OF TRANSPORTATION

Federal Aviation Administration

14 CFR Part 39

[Docket No. 2002–NM–100–AD]

RIN 2120–AA64

Airworthiness Directives; Bombardier Model CL–600–2B19 Series Airplanes

AGENCY: Federal Aviation Administration, DOT.

ACTION: Notice of proposed rulemaking (NPRM).

SUMMARY: This document proposes the adoption of a new airworthiness directive (AD) that is applicable to certain Bombardier Model CL–600–2B19 series airplanes. This proposal would require replacement of the overwing emergency exit placards, door weight placards, and no baggage placards with new placards. This action is necessary to prevent the inability of a passenger to open and dispose of the overwing emergency exit door during an emergency evacuation due to incorrect placards. This action is intended to address the identified unsafe condition.

DATES: Comments must be received by September 6, 2002.

ADDRESSES: Submit comments in triplicate to the Federal Aviation Administration (FAA), Transport Airplane Directorate, ANM–114, Attention: Rules Docket No. 2002–NM–100–AD, 1601 Lind Avenue, SW., Renton, Washington 98055–4056. Comments may be inspected at this location between 9:00 a.m. and 3:00 p.m., Monday through Friday, except Federal holidays. Comments may be submitted via fax to (425) 227–1232. Comments may also be sent via the Internet using the following address: *9-anm-nprmcomment@faa.gov.* Comments sent via fax or the Internet must contain ''Docket No. 2002–NM–100–AD'' in the subject line and need not be submitted in triplicate. Comments sent via the Internet as attached electronic files must be formatted in Microsoft Word 97 for Windows or ASCII text.

The service information referenced in the proposed rule may be obtained from Bombardier, Inc., Canadair, Aerospace Group, P.O. Box 6087, Station Centreville, Montreal, Quebec H3C 3G9, Canada. This information may be examined at the FAA, Transport Airplane Directorate, 1601 Lind Avenue, SW., Renton, Washington; or at the FAA, New York Aircraft Certification Office, 10 Fifth Street, Third Floor, Valley Stream, New York 11581.

FOR FURTHER INFORMATION CONTACT: Dan Parrillo, Aerospace Engineer, Systems and Flight Test Branch, ANE–172, FAA, New York Aircraft Certification Office, 10 Fifth Street, Third Floor, Valley Stream, New York 11581; telephone (516) 256–7505; fax (516) 568–2716.

SUPPLEMENTARY INFORMATION:

Comments Invited

Interested persons are invited to participate in the making of the proposed rule by submitting such written data, views, or arguments as they may desire. Communications shall identify the Rules Docket number and be submitted in triplicate to the address specified above. All communications received on or before the closing date for comments, specified above, will be considered before taking action on the proposed rule. The proposals contained in this action may be changed in light of the comments received.

Submit comments using the following format:

- Organize comments issue-by-issue. For example, discuss a request to change the compliance time and a request to change the service bulletin reference as two separate issues.
- For each issue, state what specific change to the proposed AD is being requested.
- Include justification (*e.g.,* reasons or data) for each request.

Comments are specifically invited on the overall regulatory, economic, environmental, and energy aspects of the proposed rule. All comments submitted will be available, both before and after the closing date for comments, in the Rules Docket for examination by interested persons. A report summarizing each FAA-public contact concerned with the substance of this proposal will be filed in the Rules Docket.

Commenters wishing the FAA to acknowledge receipt of their comments submitted in response to this action must submit a self-addressed, stamped postcard on which the following statement is made: ''Comments to Docket Number 2002–NM–100–AD.'' The postcard will be date stamped and returned to the commenter.

Availability of NPRMs

Any person may obtain a copy of this NPRM by submitting a request to the FAA, Transport Airplane Directorate, ANM–114, Attention: Rules Docket No. 2002–NM–100–AD, 1601 Lind Avenue, SW., Renton, Washington 98055–4056.

Discussion

Transport Canada Civil Aviation (TCCA), which is the airworthiness authority for Canada, notified the FAA that an unsafe condition may exist on certain Bombardier Model CL–600–2B19 series airplanes. TCCA advises that the instructions pictured on the overwing emergency exit placards are incorrect. The existing placards show a person opening the overwing emergency exit door in a sitting position, but disposing of it while standing. Due to seat pitch and placement, the overwing emergency exit door can be opened and disposed of only while a person is seated. Incorrect placards on the overwing emergency exit door, if not corrected, could result in the inability of a passenger to open and dispose of the overwing emergency exit door during an emergency evacuation.

Explanation of Relevant Service Information

Bombardier has issued Alert Service Bulletin A601R–11–077, Revision ''A,'' dated December 11, 2001, including Attachments 1 and 2, which describes procedures for replacement of the overwing emergency exit placards, door weight placards, and no baggage placards with new placards (including cleaning of the applicable surface). Accomplishment of the actions specified in the service bulletin is intended to adequately address the identified unsafe condition. TCCA classified this service bulletin as mandatory and issued Canadian airworthiness directive CF–2002–12, dated February 4, 2002, in order to assure the continued airworthiness of these airplanes in Canada.

FAA's Conclusions

This airplane model is manufactured in Canada and is type certificated for operation in the United States under the provisions of section 21.29 of the Federal Aviation Regulations (14 CFR 21.29) and the applicable bilateral airworthiness agreement. Pursuant to this bilateral airworthiness agreement, TCCA has kept the FAA informed of the situation described above. The FAA has examined the findings of TCCA, reviewed all available information, and determined that AD action is necessary for products of this type design that are certificated for operation in the United States.

Explanation of Requirements of Proposed Rule

Since an unsafe condition has been identified that is likely to exist or develop on other airplanes of the same type design registered in the United States, the proposed AD would require accomplishment of the action specified in the service bulletin described previously, except as discussed below.

Difference Between Proposed Rule and Referenced Service Bulletin

Operators should note that, although the Accomplishment Instructions of the referenced service bulletin describe procedures for completing a comment sheet related to service bulletin quality and a sheet recording compliance with the service bulletin, this proposed AD would not require those actions. The FAA does not need this information from operators.

Difference Between Proposed Rule and Canadian Airworthiness Directive

The Canadian airworthiness directive requires replacement of the overwing emergency exit placards, door weight placards, and no baggage placards with new placards, per Bombardier Alert Service Bulletin A601R–11–077, Revision 'A,' dated December 11, 2001, ''or later revision approved by the Director, Aircraft Certification, Transport Canada.'' This proposed AD would NOT specify the option of accomplishing the proposed replacement per later approved revisions of the referenced Bombardier service bulletin. The use of the phrase, ''or later approved revisions,'' violates Office of the Federal Register regulations regarding approval of materials that are incorporated by reference. However, affected operators may request approval to use a later revision of the referenced service bulletin as an alternative method of compliance, under the provisions of paragraph (b) of the proposed AD.

Cost Impact

The FAA estimates that 284 Model CL–600–2B19 series airplanes of U.S. registry would be affected by this proposed AD, that it would take approximately between 1 and 2 hours per airplane depending on the airplane configuration to accomplish the proposed actions, and that the average labor rate is $60 per work hour. Required parts would cost approximately between $47 and $195

per airplane depending on the configuration of the airplane. Based on these figures, the cost impact of the proposed AD on U.S. operators is estimated to be between $30,388 and $89,460, or $107 and $315 per airplane depending on the configuration of the airplane.

The cost impact figures discussed above are based on assumptions that no operator has yet accomplished any of the proposed requirements of this AD action, and that no operator would accomplish those actions in the future if this AD were not adopted. The cost impact figures discussed in AD rulemaking actions represent only the time necessary to perform the specific actions actually required by the AD. These figures typically do not include incidental costs, such as the time required to gain access and close up, planning time, or time necessitated by other administrative actions. However, for affected airplanes within the period under the warranty agreement, the FAA has been advised that the manufacturer has committed previously to its customers that it will bear the cost of the placard kits.

Regulatory Impact

The regulations proposed herein would not have a substantial direct effect on the States, on the relationship between the national Government and the States, or on the distribution of power and responsibilities among the various levels of government. Therefore, it is determined that this proposal would not have federalism implications under Executive Order 13132.

For the reasons discussed above, I certify that this proposed regulation (1) is not a ''significant regulatory action'' under Executive Order 12866; (2) is not a ''significant rule'' under the DOT Regulatory Policies and Procedures (44 FR 11034, February 26, 1979); and (3) if promulgated, will not have a significant economic impact, positive or negative, on a substantial number of small entities under the criteria of the Regulatory Flexibility Act. A copy of the draft regulatory evaluation prepared for this action is contained in the Rules Docket. A copy of it may be obtained by contacting the Rules Docket at the location provided under the caption **ADDRESSES.**

List of Subjects in 14 CFR Part 39

Air transportation, Aircraft, Aviation safety, Safety.

The Proposed Amendment

Accordingly, pursuant to the authority delegated to me by the Administrator, the Federal Aviation Administration proposes to amend part 39 of the Federal Aviation Regulations (14 CFR part 39) as follows:

PART 39—AIRWORTHINESS DIRECTIVES

1. The authority citation for part 39 continues to read as follows:

Authority: 49 U.S.C. 106(g), 40113, 44701.

§ 39.13 [Amended]

2. Section 39.13 is amended by adding the following new airworthiness directive:

Bombardier, Inc. (Formerly Canadair): Docket 2002–NM–100–AD.

Applicability: Model CL–600–2B19 series airplanes, certificated in any category, having the serial numbers listed in the following table:

Table—Serial Numbers

Serial Numbers
7003 through 7434 inclusive
7436 through 7442 inclusive
7444 through 7452 inclusive
7454 through 7458 inclusive
7460 through 7497 inclusive
7499 through 7504 inclusive

Note 1: This AD applies to each airplane identified in the preceding applicability provision, regardless of whether it has been modified, altered, or repaired in the area subject to the requirements of this AD. For airplanes that have been modified, altered, or repaired so that the performance of the requirements of this AD is affected, the owner/operator must request approval for an alternative method of compliance in accordance with paragraph (b) of this AD. The request should include an assessment of the effect of the modification, alteration, or repair on the unsafe condition addressed by this AD; and, if the unsafe condition has not been eliminated, the request should include specific proposed actions to address it.

Compliance: Required as indicated, unless accomplished previously.

To prevent the inability of a passenger to open and dispose of the overwing emergency exit door during an emergency evacuation due to incorrect placards, accomplish the following:

Installation of Placards

(a) Within 12 months after the effective date of this AD, replace the overwing emergency exit placards, door weight placards, and no baggage placards with new placards (including cleaning of the applicable surface), as applicable, per Bombardier Alert Service Bulletin A601R–11–077, Revision 'A,' dated December 11, 2001, including Attachments 1 and 2; except it is not necessary to complete the comment and compliance sheet.

Alternative Methods of Compliance

(b) An alternative method of compliance or adjustment of the compliance time that provides an acceptable level of safety may be used if approved by the Manager, New York Aircraft Certification Office (ACO), FAA. Operators shall submit their requests through an appropriate FAA Principal Maintenance Inspector, who may add comments and then send it to the Manager, New York ACO.

Note 2: Information concerning the existence of approved alternative methods of compliance with this AD, if any, may be obtained from the New York ACO.

Special Flight Permits

(c) Special flight permits may be issued in accordance with sections 21.197 and 21.199 of the Federal Aviation Regulations (14 CFR 21.197 and 21.199) to operate the airplane to a location where the requirements of this AD can be accomplished.

Note 3: The subject of this AD is addressed in Canadian airworthiness directive CF–2002–12, dated February 4, 2002.

Issued in Renton, Washington, on July 29, 2002.

Vi L. Lipski,

Manager, Transport Airplane Directorate, Aircraft Certification Service.

[FR Doc. 02–19876 Filed 8–6–02; 8:45 am]

BILLING CODE 4910–13–P

DEPARTMENT OF TRANSPORTATION

Federal Aviation Administration

14 CFR Part 71

[Airspace Docket No. 02–ASO–9]

Proposed Amendment of Class E5 Airspace; Prestonburg, KY

AGENCY: Federal Aviation Administration (FAA), DOT.

ACTION: Notice of proposed rulemaking.

SUMMARY: This action proposes to amend Class E5 airspace at Prestonburg, KY. A Area Navigation (RNAV), Global Positioning System (GPS), Runway (RWY) 3, a RNAV (GPS) RWY 21, and a VHF Omni-directional Range (VOR)/Distance Measuring Equipment (DME)–A Standard Instrument Approach Procedure (SIAP) has been developed for Big Sandy Regional Airport, KY. As a result, controlled airspace extending upward from 700 feet Above Ground Level (AGL) is needed to accommodate the SIAPs.

DATES: Comments must be received on or before September 6, 2002.

ADDRESSES: Send comments on the proposal in triplicate to: Federal Aviation Administration, Docket No. 02–ASO–9, Manager, Airspace Branch, ASO–520, P.O. Box 20636, Atlanta, Georgia 30320.

The official docket may be examined in the Office of the Regional Counsel for Southern Region, Room 550, 1701 Columbia Avenue, College Park, Georgia 30337, telephone (404) 305–5586.

FOR FURTHER INFORMATION CONTACT: Walter R. Cochran, Manager, Airspace Branch, Air Traffic Division, Federal Aviation Administration, P.O. Box 20636, Atlanta, Georgia 30320; telephone (404) 305–5586.

SUPPLEMENTARY INFORMATION:

Comments Invited

Interested parties are invited to participate in this proposed rulemaking by submitting such written data, views or arguments as they may desire. Comments that provide the factual basis supporting the views and suggestions presented are particularly helpful in developing reasoned regulatory decisions on the proposal. Comments are specifically invited on the overall regulatory, aeronautical, economic, environmental, and energy-related aspects of the proposal. Communications should identify the airspace docket number and be submitted in triplicate to the address listed above. Comments wishing the FAA to acknowledge receipt of their comments on this action must submit with those comments a self-addressed, stamped postcard on which the following statement is made: ''Comments to Airspace Docket No. 02–ASO–9.'' The postcard will be date/time stamped and returned to the commenter. All communications received before the specified closing date for comments will be considered before taking action on the proposed rule. The proposal contained in this action may be changed in light of the comments received. All comments submitted will be available for examination in the Office of the Regional Counsel for Southern Region, Room 550, 1701 Columbia Avenue, College Park, Georgia 30337, both before and after the closing date for comments. A report summarizing each substantive public contact with FAA personnel concerned with this rulemaking will be filed in the docket.

Availability of NPRMs

Any person may obtain a copy of this Notice of Proposed Rulemaking (NPRM) by submitting a request to the Federal Aviation Administration, Manager, Airspace Branch, ASO–520, Air Traffic Division, P.O. Box 20636, Atlanta, Georgia 30320. Communications must identify the docket number of this NPRM. Persons interested in being placed on a mailing list for future NPRMs should also request a copy of Advisory Circular No. 11–2A which describes the application procedure.

The Proposal

The FAA is considering an amendment to part 71 of the Federal Aviation Regulations (14 CFR part 71) to amend Class E airspace at Prestonburg, KY. A RNAV (GPS), RWY 3, a RNAV (GPS) RWY 21, and a VOR/DME–A SIAP has been developed for Big Sandy Regional Airport, KY. Controlled airspace extending upward from 700 feet AGL is needed to accommodate the SIAPs. Class E airspace designations for airspace areas extending upward from 700 feet or more above the surface of the earth are published in Paragraph 6005 of FAA Order 7400.9J, dated August 31, 2001, and effective September 16, 2001, which is incorporated by reference in 14 CFR 71.1. The Class E airspace designation listed in this document would be published subsequently in the Order.

The FAA has determined that this proposed regulation only involves an established body of technical regulations for which frequent and routine amendments are necessary to keep them operationally current. It, therefore, (1) is not a ''significant regulatory action'' under Executive Order 12866; (2) is not a ''significant rule'' under DOT Regulatory Policies and Procedures (44 FR 11034; February 26, 1979); and (3) does not warrant preparation of a Regulatory Evaluation as the anticipated impact is so minimal. Since this is a routine matter that will only affect air traffic procedures and air navigation, it is certified that this rule, when promulgated, will not have a significant economic impact on a substantial number of small entities under the criteria of the Regulatory Flexibility Act.

List of Subjects in 14 CFR Part 71

Airspace, Incorporation by reference, Navigation (air).

The Proposed Amendment

In consideration of the foregoing, the Federal Aviation Administration proposes to amend 14 CFR Part 71 as follows:

PART 71—DESIGNATION OF CLASS A, CLASS B, CLASS C, CLASS D, AND CLASS E AIRSPACE AREAS; AIRWAYS; ROUTES; AND REPORTING POINTS

1. The authority citation for part 71 continues to read as follows:

Authority: 49 U.S.C. 106(g); 40103, 40113, 40120; E.O. 10854, 24 FR 9565, 3 CFR, 1959–1963 Comp., p. 389.

§ 71.1 [Amended]

2. The incorporation by reference in 14 CFR 71.1 of Federal Aviation Administration Order 7400.9J, Airspace Designations and Reporting Points, dated August 31, 2001, and effective September 16, 2001, is amended as follows:

Paragraph 6005 Class E Airspace Areas Extending Upward from 700 feet or More Above the Surface of the Earth

* * * * *

ASO KY E5 Prestonburg, KY [REVISED]

Prestonburg, Big Sandy Regional Airport, KY

(Lat. 37°45′04″N, long. 82°38′12″W)

That airspace extending upward from 700 feet or more above the surface within a 6.5-mile radius of the Big Sandy Regional Airport.

* * * * *

Issued in College Park, Georgia, on July 24, 2002.

Walter R. Cochran,

Acting Manager, Air Traffic Division, Southern Region.

[FR Doc. 02–19555 Filed 8–6–02; 8:45 am]

BILLING CODE 4910–13–M

DEPARTMENT OF ENERGY

Federal Energy Regulatory Commission

18 CFR Parts 101, 201, and 352

[Docket No. RM02–14–000]

Regulation of Cash Management Practices

August 1, 2002.

AGENCY: Federal Energy Regulatory Commission.

ACTION: Notice of proposed rulemaking.

SUMMARY: In order to protect the customers of jurisdictional companies, the Federal Energy Regulatory Commission is proposing to establish limits on the amount of funds that can be swept from a regulated subsidiary to a non-regulated parent under so-called ''cash management'' programs, as well as certain other requirements.

DATES: Comments are due 15 days after publication in the **Federal Register**.

ADDRESS: File written comments with the Office of the Secretary, Federal Energy Regulatory Commission, 888 First Street, NE., Washington DC, 20426. Comments should reference Docket No. RM02–14–000. Comments may be filed electronically or by paper (an original and 14 copies with an accompanying computer diskette in the prescribed format requested).

FOR FURTHER INFORMATION CONTACT:
Mark Klose (Technical Information), Office of the Executive Director, Division of Regulatory Accounting Policy, Federal Energy Regulatory Commission, 888 First Street NE, Washington, DC 20426, (202) 219–2595.
Mary Lauermann (Technical Information), Office of the Executive Director, Division of Regulatory Audits, Federal Energy Regulatory Commission, 888 First Street NE, Washington, DC 20426, (202) 208–0087.
Peter Roidakis (Legal Information), Office of the General Counsel, Federal Energy Regulatory Commission, 888 First Street NE, Washington, DC 20426, (202)208–1213.

SUPPLEMENTARY INFORMATION:

I. Introduction

1. In this Notice of Proposed Rulemaking (NOPR), the Federal Energy Regulatory Commission (Commission) proposes to amend its Uniform Systems of Accounts [1] for public utilities,[2] natural gas companies [3] and oil pipeline companies [4] by establishing the documentation necessary ''to furnish readily full information'' [5] concerning the management of funds from a FERC-regulated subsidiary by a non-FERC-regulated parent.[6] Specifically, the Commission is requiring that all such arrangements be in writing. Such arrangements must specify the duties and responsibilities of cash management participants and administrators, the methods of calculating interest and for allocating interest income and expenses, and the restrictions on deposits or borrowings by money pool members.

2. Under the proposed rule, such cash management or money pool agreements must provide documentation for all deposits into, borrowings from, interest income from, and interest expenses to such money pools. Such documentation shall include evidences of: (1) Each deposit with a money pool, including the date of the deposit, the amount of the deposit, the maturity date, if any, of the deposit, and the interest earning rate on the deposit; (2) each borrowing from a money pool, including the date of the borrowing, the amount of the borrowing, the maturity date, if any, of the borrowing and the interest rate on the borrowing; (3) the security provided by the money pool for repayment of deposits into the money pool and the security required by the money pool in support of borrowings from the money pool; and (4) daily balances of deposits with and borrowings from the money pool for each individual deposit or borrowing. Cash deposits and borrowings may not be netted.

3. Finally, the Commission is proposing that as a condition for participating in a cash management or money pool arrangement, the FERC-regulated entity must maintain a minimum proprietary capital balance (stockholder's equity) of 30 percent, and the FERC-regulated entity and its parent must maintain investment grade credit ratings. If either of these conditions is not met, the FERC-regulated entity may not participate in the cash management or money pool arrangement.

4. The proposed rule is in the public interest because it will permit FERC-regulated entities to benefit from properly structured cash management programs, while protecting customer interests.

II. Background

Cash Management Programs Generally

5. The overall objective of a cash management program is to enhance owner value. Cash management arrangements can provide participants with greater financing flexibility and a lower cost of borrowing than would otherwise be available to small entities. These arrangements can help smaller affiliates within the group receive the same favorable rates as larger entities.

6. There are several types of cash management programs. Some concentrate and transfer funds from multiple accounts into a single bank account in the parent company's name. Another type is known as ''cash pooling'' or ''money pooling.'' This system uses a single summary account with interest earned or charged on the net cash balance position. There is no movement of funds between accounts of the entities participating in the pool. All accounts must be in the same bank, but not at the same branch. A third type, known as ''zero balance accounts,'' empty or fill the balances in affiliated companies' accounts at a bank into or out of a parent's account each day.

7. In a typical zero balance program, excess funds are swept to a corporate concentration account every night from the regulated company's zero balance accounts, and an account receivable from the parent is established at the regulated company while an account payable is established at the parent company to record the transfer of funds. As part of the cash management program, the parent company provides the funds for payment of payroll and other expenditures of its subsidiaries from the funds that have been swept to the parent. The parent invests unspent funds in overnight investments so that the money of all the subsidiaries will be working for the company rather than being idle.

8. Cash management programs are not without risk, however. Problems can arise over the respective rights to the concentration or pooled account when the parent company or its subsidiaries file for bankruptcy. Courts have ruled that funds swept into a parent company's concentration account become the property of the parent, and the subsidiary loses all interest in those funds.[7]

9. There is thus a potential for degradation of the financial solvency of regulated entities if non-regulated parent companies declare bankruptcy and default on the accounts payable, advances or borrowings owed to their regulated subsidiaries.

FERC Regulated Entities' Cash Management Programs

10. In the fall of 2001, the Commission's Chief Accountant began a review of transactions between unregulated parent companies and their jurisdictional subsidiaries. Specifically, the balances in the cash account and accounts related to associated companies, reported in the FERC Forms 1, 2, and 6, were reviewed for the years 1997 through 2001. This review revealed that many companies had significant balances in Account 146—

[1] Section 301(a) of the Federal Power Act (FPA), 16 U.S.C. 825(a), section 8 of the Natural Gas Act (NGA), 15 U.S.C. 717g, and section 20 of the Interstate Commerce Act (ICA), 49 App. U.S.C. 20 (1998), authorize the Commission to prescribe rules and regulations concerning accounts, records and memoranda as necessary or appropriate for the purposes of administering the FPA, NGA and the ICA. The Commission may prescribe a system of accounts for jurisdictional companies and, after notice and opportunity for hearing, may determine the accounts in which particular outlays and receipts will be entered, charged or credited.

[2] Part 101 Uniform System of Accounts Prescribed for Public Utilities and Licensees Subject to the Provisions of the Federal Power Act. 18 CFR part 101 (2002).

[3] Part 201 Uniform System of Accounts Prescribed for Natural Gas Companies Subject to the Provisions of the Natural Gas Act. 18 CFR part 201 (2002).

[4] Part 352 Uniform System of Accounts Prescribed for Oil Pipeline Companies Subject to the Provisions of the Interstate Commerce Act. 18 CFR part 352 (2002).

[5] *See* General Instructions—Records under Parts 101, 201, and 352 of the Commission's Uniform System of Accounts for public utilities, licensees, natural gas companies, and oil pipeline companies.

[6] The proposed regulations would apply to all public utilities subject to the Uniform System of Accounts, all natural gas companies subject to the Uniform System of Accounts, and all oil pipeline carriers subject to the Uniform System of Accounts.

[7] *See, e.g.,* In the Matter of Southmark Corporation, 49 F.3d 1111 (5th Cir. 1995), and *In re* Amdura Corporation, 75 F.3d 1447 (10th Cir. 1996).

Accounts Receivable from Associated Companies, and Account 13—Receivables from Affiliated Companies, and that the balances in these accounts were significantly increasing over the period under review.

11. As a result of the use of cash management programs and the increased balances in Account 146 identified by this initial review, the Chief Accountant began an audit in January 2002, to determine compliance with the Commission's accounting and reporting requirements for the years 2000 through 2001.

12. In March 2002, the Commission initiated a non-public investigation by the Chief Accountant, Office of the Executive Director, and the Market Oversight and Enforcement section, Office of the General Counsel, regarding financial data related to transactions, activities and accounting practices that may have impaired the financial condition of entities subject to the Commission's jurisdiction to the benefit of corporate parents or other affiliates or associated entities of jurisdictional companies.

13. The investigators reviewed transactions affecting Account 146—Accounts Receivable from Associated Companies for gas and electric companies, and Account 13—Receivables from Affiliated Companies for oil companies. Based on FERC Forms 1, 2 and 6 data from 2001, balances in Accounts 146 and 13 totaled approximately $16 billion ($8.2 billion in public utility accounts, $2 billion in natural gas company accounts, and $5.7 billion in oil and product pipeline accounts). The preliminary results of the audit/investigation also revealed severe record-keeping deficiencies:

- Cash management agreements, generally and across the electric, gas and oil industries, have not been formalized in writing to stipulate the terms of the programs and the interest associated with the loans of the subsidiaries' cash.
- Interest may or may not have been paid to subsidiary companies by the parents.
- Budgets are not developed at the subsidiary level for capital expenditures and operations and maintenance expenses.
- Inter-company billings between parents and subsidiaries may have occurred at preferential rates not given to non-affiliated customers.

III. Legal Authority and Proposed Regulations

14. The Commission is proposing to require clearly defined roles and responsibilities of all parties regarding transfers of cash, payments of bills, payments of interest, and the limitations to which funds can be taken from FERC-regulated subsidiaries. Cash management agreements must be reviewed and updated periodically to ensure that changes in corporate structure have not made the agreements obsolete.

15. The Natural Gas Act (NGA) with respect to natural gas companies, and the Federal Power Act (FPA) with respect to public utilities, and the Interstate Commerce Act (ICA) with respect to oil pipeline carriers authorize the Commission to prescribe rules and regulations concerning accounts, records and memoranda as necessary or appropriate for the purposes of administering the FPA, NGA, and the ICA.[8] The NGA and the FPA also empower the Commission, with respect to natural gas pipelines and public utilities, to ''perform any and all acts, and to prescribe, issue, make, amend, and rescind such orders, rules and regulations as it may find necessary or appropriate to carry out the provisions of [the] Act.'' Section 16 of the NGA, 15 U.S.C. 717*o*, and section 309 of the FPA, 16 U.S.C. 825(h). Under the Interstate Commerce Act (ICA), the Commission may, with respect to oil and product pipelines ''prescribe the forms of any and all accounts, records, and memoranda to be kept by carriers * * * as well as of the receipts and expenditures of monies.'' ICC, Title 49 Appendix section 20 (5), 49 App. U.S.C. 20 (5) (1988). The Commission also has the authority to perform the duties for which it was created ''to inquire into and report on the business of persons controlling, controlled by, or under a common control with such carriers * * *.'' ICA, Title 49 Appendix section 12, 49 App. U.S.C. 12 (1988).

16. The Commission proposes to revise Account 146 in parts 101 and 201, and Account 13 in part 352 to provide instructions and conditions for the maintenance of cash management arrangements. Specifically, the Commission is requiring that all such arrangements be in writing. Such arrangements must specify the duties and responsibilities of cash management participants and the administrator, the methods of calculating interest and for allocating interest income and expenses, and the restrictions on deposits or borrowings by money pool members.

17. Under the proposed rule, such cash management agreements must provide documentation for all deposits into, borrowings from, interest income from, and interest expenses related to such agreements. Such documentation shall include evidence of: (1) Each deposit with a money pool, including the date of the deposit, the amount of the deposit, the maturity date, if any, of the deposit, and the interest earning rate on the deposit; (2) each borrowing from a money pool, including the date of the borrowing, the amount of the borrowing, the maturity date, if any, of the borrowing and the interest rate on the borrowing; (3) the security provided by the money pool for repayment of deposits into the money pool and the security required by the money pool in support of borrowings from the money pool; and (4) daily balances of deposits with and borrowings from the money pool for each individual deposit or borrowing. Cash deposits and borrowings may not be netted.

18. Because of the Commission's concern that such accounts not be used improperly so as to cause serious financial harm to FERC-regulated entities, and ultimately cause harm to the ratepayers, the Commission proposes that as a prerequisite to participating in a cash management arrangement, a FERC-regulated entity shall maintain a minimum proprietary capital balance of 30 percent,[9] and the FERC-regulated entity and its parent must maintain investment grade credit ratings.[10] If either of these conditions is no longer met, the FERC-regulated entity may not participate in the cash management or money pool arrangement.

IV. Information Collection Statement

19. The following collection of information contained in this proposed rule has been submitted to the Office of Management and Budget for emergency review under section 3507(j)(1) of the Paperwork Reduction Act of 1995, 44 U.S.C. 3507(j)(1). Comments are solicited on the Commission's need for this information, whether the information will have practical utility, the accuracy of provided burden estimates, ways to enhance quality, utility, and clarity of the information to

[8] *See* n.1, *supra.*

[9] *See* Niagara Mohawk Holdings, Inc, 99 FERC ¶ 61,323 (2002), where the Commission conditionally approved a requirement that a company maintain an equity balance equal to at least 30 percent of capital.

[10] The term ''investment grade'' was originally used by regulatory bodies to connote obligations eligible for investment by institutions such as banks, insurance companies, and savings and loan associations. Over time, this term became widespread throughout the investment community. Debt issues rated in four highest categories (*e.g.,* Standard & Poor's AAA, AA, A, and BBB rating, or Moody's Investors Service Aaa, Aa, and A and Baa rating are generally recognized as being investment grade. Lower rating categories are generally considered speculative.

be collected, and any suggested methods for minimizing respondents' burden, including the use of automated information techniques.

Estimated Annual Burden

At present it is unclear how many companies already have written agreements in place and would not be impacted by this rule. But there are a significant number of FERC-regulated entities that could be impacted by this rule because of their membership in consolidated groups and their participation in cash management arrangements. For this reason, the Commission projects the total hours for the following collections of information:

Data collection	Number of respondents	Estimated % that are members of a consolidated group	No. of responses	Total annual hrs.
FERC–Form 1	268	51% or 137 (approx)	137	274
FERC Form 2	133	85% or 113 (approx)	113	226
FERC Form 6	201	98.5% or 198 (approx)	198	396
Totals				896

Total Annual Hours for Collection

(Reporting + Recordkeeping, (if appropriate)) = 896 hours

* This estimate is based on an average of 2 hours per respondent to convert verbal agreements into written agreements.

Information Collection Costs: The Commission seeks comments on the costs to comply with these requirements. It has projected the cost for compliance to be the following: 896 hours ÷ 2,080 × $117,041 = $50,418.

Annualized capital/startup costs	$0
Annualized costs (Operations & Maintenance)	$50,418
Total annualized costs	$50,418

The Office of Management and Budget's (OMB) regulations [11] require OMB to approve certain information collection requirements imposed by agency rule. The Commission is submitting notification of this proposed rule to OMB.

Title: FERC Form 1 Annual Report of Major Electric Utilities, Licensees and Others; FERC Form 2 Annual Report for Major Natural Gas Companies; FERC Form No. 6 Annual Report of Oil Pipeline Companies.

Action: Proposed Collections.

OMB Control No: 1902–0021; 1902–0028; and 1902–0022. [Note: The collections of information contained in this proposed rule are being submitted to OMB under OMB's emergency clearance procedures. These collections of information are also the subject of a separate proceeding in Docket No. RM02–3–000, and to avoid any delay in OMB's review of this proposed rule, the collections of information in this proposed rule will have a temporary designation of FERC–907. When the Commission issues a final rule, the collections of information will revert to their normal identifiers and control numbers.]

Respondents: Business or other for profit.

Frequency of Responses: On occasion.

Necessity of the Information: The Commission proposes to revise its Uniform System of Accounts to establish the documentation necessary to disclose information on the management of funds from a FERC-regulated subsidiary by a non-regulated parent. Specifically, the Commission is requiring that all such cash management arrangements be in writing. Such arrangements must specify the duties and responsibilities of cash management participants and administrators, the methods of calculating the interest and for allocating interest income and expenses, and the restrictions on deposits and/or borrowing of money pool members. The Commission is also proposing that as a condition for participating in cash management arrangements, the FERC-regulated entity must maintain a minimum proprietary capital balance of 30 percent and the FERC-regulated entity and its parent must maintain investment grade ratings.

As a result of the Commission's investigations, it was found that cash management agreements, generally and across the electric, gas and oil industries have not been formalized in writing stipulating both the terms of the programs and the interest associated with the loans of the subsidiaries' cash. In addition, budgets are not developed at the subsidiary level for capital expenditures, operations and maintenance expenses and the interest that may or may not have been paid to subsidiary companies by the parent.

The Commission is concerned that such accounts may be used so as create severe financial risk to FERC-regulated entities, and cause harm to rate payers should the subsidiaries attempt to pass through costs that result from defaults by unregulated parent companies, resulting in higher costs of capital.

Internal Review: The Commission has reviewed the requirements pertaining to the Uniform System of Accounts and to the three financial reports it prescribes and has determined that the proposed revisions are necessary because the Commission needs to establish uniform accounting and reporting requirements for cash management arrangements.

These requirements conform to the Commission's plan for efficient information collection, communication, and management within the electric, natural gas and oil pipeline industries. The Commission has assured itself, by means of internal review, that there is objective support for the burden estimates associated with the information requirements.

Interested persons may obtain information on the reporting requirements by contacting the following: Federal Energy Regulatory Commission, 888 First Street, NE, Washington, DC 20426, [Attention: Michael Miller, Office of the Chief Information Officer, Phone: (202) 502–8415, fax: (202) 208–2425, e-mail: *michael.miller@ferc.fed.us*]

For submitting comments concerning the collection of information(s) and the associated burden estimate(s), please send your comments to the contact listed above and to the Office of Management and Budget, Office of Information and Regulatory Affairs, 725 17th Street, NW, Washington, DC 20503 [Attention: Desk Officer for the Federal Energy Regulatory Commission, phone (202) 395–7856, fax: (202) 395–7285.

V. Environmental Analysis

20. The Commission is required to prepare an Environmental Assessment or an Environmental Impact Statement for any action that may have a significant adverse effect on the human

[11] 5 CFR 1320.11 (1996).

environment.[12] The Commission excludes certain actions not having a significant effect on the human environment from the requirement to prepare an environmental impact statement.[13] No environmental consideration is raised by the promulgation of a rule that is procedural or does not substantially change the effect of legislation or regulations being amended.[14] The proposed rule updates Parts 101, 201, and 352 of the Commission's regulations, and does not substantially change the effect of the underlying legislation or the regulations being revised or eliminated. Accordingly, no environmental consideration is necessary.

VI. Regulatory Flexibility Act Statement

21. The Regulatory Flexibility Act of 1980 (RFA)[15] generally requires a description and analysis of final rules that will have significant economic impact on a substantial number of small entities. The Commission is not required to make such analyses if a rule would not have such an effect. The Commission concludes that this rule would not have such an impact on small entities. Most filing companies regulated by the Commission do not fall within the RFA's definition of a small entity, and the data required by this rule are already being captured by their accounting systems. However, if the reporting requirements represent an undue burden on small businesses, the entity affected may seek a waiver of the requirements from the Commission.

VII. Comment Procedures

22. The Commission invites interested persons to submit written comments on the matters and issues proposed in this notice to be adopted, including any related matters or alternative proposals that commenters may wish to discuss. Comments are due 15 days from publication in the **Federal Register**. Comments must refer to Docket No. RM02–14–000, and may be filed either in electronic or paper format. Those filing electronically do not need to make a paper filing.

23. Documents filed electronically via the Internet can be prepared in a variety of formats, including WordPerfect, MS Word, Portable Document Format, Real Text Format, or ASCII format, as listed on the Commission's web site at *http://ferc.gov*, under the e-Filing link. The e-Filing link provides instructions for how to Login and complete an electronic filing. First time users will have to establish a user name and password. The Commission will send an automatic acknowledgment to the sender's E-Mail address upon receipt of comments. User assistance for electronic filing is available at 202–208–0258 or by E-Mail to *efiling@ferc.gov.* Comments should not be submitted to the E-Mail address.

24. For paper filings, the original and 14 copies of such comments should be submitted to the Office of the Secretary, Federal Energy Regulatory Commission, 888 First Street, NE., Washington DC 20426.

25. All comments will be placed in the Commission's public files and will be available for inspection in the Commission's Public Reference Room at 888 First Street, NE., Washington DC 20426, during regular business hours. Additionally, all comments may be viewed, printed, or downloaded remotely via the Internet through FERC's Homepage using the FERRIS link.

VIII. Document Availability

26. In addition to publishing the full text of this document in the **Federal Register**, the Commission provides all interested persons an opportunity to view and/or print the contents of this document via the Internet through FERC's Home Page (*http://www.ferc.gov*) and in FERC's Public Reference Room during normal business hours (8:30 a.m. to 5 p.m. Eastern time) at 888 First Street, NE., Room 2A, Washington, DC 20426.

27. From FERC's Home Page on the Internet, this information is available in the Federal Energy Regulatory Records Information System (FERRIS). The full text of this document is available on FERRIS in PDF and WordPerfect format for viewing, printing, and/or downloading. To access this document in FERRIS, type the docket number excluding the last three digits of this document in the docket number field.

28. User assistance is available for FERRIS and the FERC's website during normal business hours from our Help line at (202) 208–2222 or the Public Reference Room at (202) 208–1371 Press 0, TTY (202) 208–1659. E-Mail the Public Reference Room at *public.referenceroom@ferc.gov.*

List of Subjects

18 CFR Part 101

Electric power, Electric utilities, Reporting and recordkeeping requirements, Uniform System of Accounts.

18 CFR Part 201

Natural gas, Reporting and recordkeeping requirements, Uniform System of Accounts.

18 CFR Part 352

Pipelines, Reporting and recordkeeping requirements, Uniform System of Accounts.

By direction of the Commission.

Magalie R. Salas,

Secretary.

In consideration of the foregoing, the Commission proposes to amend parts 101, 201, and 352, Title 18 of the Code of Federal Regulations, as follows:

PART 101—UNIFORM SYSTEM OF ACCOUNTS PRESCRIBED FOR PUBLIC UTILITIES AND LICENSEES SUBJECT TO THE PROVISIONS OF THE FEDERAL POWER ACT

1. The authority citation for part 101 continues to read as follows:

Authority: 16 U.S.C. 791a–825r, 2601–2645; 31 U.S.C. 9701; 42 U.S.C. 7101–7352, 7651–7651o.

2. In part 101, Balance Sheet Accounts, account 146 is revised to read as follows:

Balance Sheet Accounts

* * * * *

146 *Accounts receivable from associated companies.*

A. These accounts shall include notes and drafts upon which associated companies are liable, and which mature and are expected to be paid in full not later than one year from the date of issue, together with any interest thereon, and debit balances subject to current settlement in open accounts with associated companies. Items which do not bear a specified due date but which have been carried for more than twelve months and items which are not paid within twelve months from the due date shall be transferred to account 123, Investment in Associated Companies.

B. As a prerequisite for participating in a cash management or money pool arrangement, a utility shall maintain a minimum proprietary capital balance of 30 percent, and a utility and its parent must maintain an investment grade credit rating. If either of these requirements is not met, the utility may not participate in the cash management or money pool arrangement. A utility participating in a cash management or money pool arrangement shall maintain supporting documentation for all deposits into, borrowings from, interest income from, and interest expense to such money pool. The written documentation shall include evidences

[12] Order No. 486, Regulations Implementing the National Environmental Policy Act, 52 47897 (Dec. 17, 1987), FERC Stats. & Regs. Prambles 1986–1990 ¶ 30,783 (1987).

[13] 18 CFR 380.4.

[14] 18 CFR 380.4(a)(2)(ii).

[15] 5 U.S.C. 601–612.

of: (1) Each deposit with the money pool, including the date of the deposit, the amount of the deposit, the maturity date, if any, of the deposit, and the interest earning rate on the deposit; (2) each borrowing from a money pool, including the date of the borrowing, the amount of the borrowing, the maturity date, if any, of the borrowing and the interest rate on the borrowing; (3) the security provided by the money pool for repayment deposits into the money pool and the security required by the money pool in support of borrowings from the money pool; and (4) daily balances of deposits with and borrowings from the money pool for each individual deposit or borrowing. Cash deposits and borrowings may not be netted.

C. The utility shall also maintain current and up-to-date copies of the documents authorizing the establishment of the cash management or money pool arrangement that specifies the following: (1) The duties and responsibilities of the money pool, its administrator and the other participants in the money pool; (2) the restrictions on deposits or borrowings by pool members, (3) the method used to determine the interest earning rates and interest borrowing rates by pool members; and (4) the method used to allocate interest income and expenses among the pool members.

Note A: On the balance sheet, accounts receivable from an associated company may be set off against accounts payable to the same company.

Note B: The face amount of notes receivable discounted, sold or transferred without releasing the utility from liability as endorser thereon, shall be credited to a separate subdivision of this account and appropriate disclosure shall be made in financial statements of any contingent liability arising from such transactions.

* * * * *

PART 201—UNIFORM SYSTEM OF ACCOUNTS PRESCRIBED FOR NATURAL GAS COMPANIES SUBJECT TO THE PROVISIONS OF THE NATURAL GAS ACT

3. The authority citation for part 201 continues to read as follows:

Authority: 15 U.S.C. 717–717w, 3301–3432; 42 U.S.C. 7101–7352, 7651–7651o.

4. In part 201, Balance Sheet Accounts, account 146 is revised to read as follows:

Balance Sheet Accounts

* * * * *

146 *Accounts receivable from associated companies.*

A. These accounts shall include notes and drafts upon which associated companies are liable, and which mature and are expected to be paid in full not later than one year from the date of issue, together with any interest thereon, and debit balances subject to current settlement in open accounts with associated companies. Items which do not bear a specified due date but which have been carried for more than twelve months and items which are not paid within twelve months from the due date shall be transferred to account 123, Investment in Associated Companies.

B. As a prerequisite for participating in a cash management or money pool arrangement, a utility shall maintain a minimum proprietary capital balance of 30 percent and a utility and its parent must maintain an investment grade credit rating. If either of these requirements is not met, the utility may not participate in the cash management or money pool arrangement. A utility participating in a cash management or money pool arrangement shall maintain supporting documentation for all deposits into, borrowings from, interest income from, and interest expense to such money pool. The written documentation shall include evidences of: (1) Each deposit with the money pool, including the date of the deposit, the amount of the deposit, the maturity date, if any, of the deposit, and the interest earning rate on the deposit; (2) each borrowing from a money pool, including the date of the borrowing, the amount of the borrowing, the maturity date, if any, of the borrowing and the interest rate on the borrowing; (3) the security provided by the money pool for repayment deposits into the money pool and the security required by the money pool in support of borrowings from the money pool; and (4) daily balances of deposits with and borrowings from the money pool for each individual deposit or borrowing. Cash deposits and borrowings may not be netted.

C. The utility shall also maintain current and up-to-date copies of the documents authorizing the establishment of the money pool that specifies the following: (1) The duties and responsibilities of the money pool, its administrator and the other participants in the money pool; (2) the restrictions on deposits or borrowings by pool members, (3) the method used to determine the interest earning rates and interest borrowing rates by pool members; and (4) the method used to allocate interest income and expenses among the pool members.

Note A: On the balance sheet, accounts receivable from an associated company may be set off against accounts payable to the same company.

Note B: The face amount of notes receivable discounted, sold or transferred without releasing the utility from liability as endorser thereon, shall be credited to a separate subdivision of this account and appropriate disclosure shall be made in financial statements of any contingent liability arising from such transactions.

* * * * *

PART 352—UNIFORM SYSTEM OF ACCOUNTS PRESCRIBED FOR OIL PIPELINE COMPANIES SUBJECT TO THE PROVISIONS OF THE INTERSTATE COMMERCE ACT

5. The authority citation for part 352 continues to read as follows:

Authority: 49 U.S.C. 60502; 49 App. U.S.C. 1–85 (1988).

* * * * *

6. In part 352, Balance Sheet Accounts, account 13 is revised to read as follows:

Balance Sheet Accounts

* * * * *

13 *Receivables from affiliated companies.*

(a) This account shall include amounts receivable due and accrued from affiliated companies subject to settlement within one year from date of the balance sheet. This includes receivables for items such as revenue for services rendered, material furnished, rent, interest and dividends, advances and notes.

(b) As a prerequisite for participating in a cash management or money pool arrangement, a carrier shall maintain a minimum proprietary capital balance of 30 percent, and a carrier and its parent must maintain an investment grade credit rating. If either of these requirements is not met, the carrier may not participate in the cash management or money pool arrangement. A carrier participating in a money pool arrangement shall maintain supporting documentation for all deposits into, borrowings from, interest income from, and interest expense to such money pool. The written documentation shall include evidences of: (1) Each deposit with the money pool, including the date of the deposit, the amount of the deposit, the maturity date, if any, of the deposit, and the interest earning rate on the deposit; (2) each borrowing from a money pool, including the date of the borrowing, the amount of the borrowing, the maturity date, if any, of the borrowing and the interest rate on the borrowing; (3) the security provided by the money pool for repayment deposits into the money pool and the security

required by the money pool in support of borrowings from the money pool; and (4) daily balances of deposits with and borrowings from the money pool for each individual deposit or borrowing. Cash deposits and borrowings may not be netted.

(c) The carrier shall also maintain current and up-to-date copies of the documents authorizing the establishment of the money pool that specifies the following: (1) The duties and responsibilities of the money pool, its administrator and the other participants in the money pool; (2) the restrictions on deposits or borrowings by pool members, (3) the method used to determine the interest earning rates and interest borrowing rates by pool members; and (4) the method used to allocate interest income and expenses among the pool members.

[FR Doc. 02–20016 Filed 8–6–02; 8:45 am]

BILLING CODE 6717–01–P

DEPARTMENT OF THE TREASURY

Bureau of Alcohol, Tobacco and Firearms

27 CFR Part 9

[Notice No. 951; Re: Notice No. 903]

RIN 1512–AC83

Denial of the California Coast Viticultural Area Petition (2000R–166P)

AGENCY: Bureau of Alcohol, Tobacco and Firearms (ATF), Treasury.

ACTION: Termination of proposed rulemaking; denial of petition.

SUMMARY: The Bureau of Alcohol, Tobacco and Firearms (ATF) announces the denial of the petition requesting establishment of the ''California Coast'' viticultural area and the termination of the related proposed rulemaking (Notice No. 903 of September 26, 2000, 65 FR 57763). ATF has concluded the petitioned viticultural area fails to meet the regulatory requirements issued under the authority of the Federal Alcohol Administration Act. ATF also announces that a supplemental report, ''ATF Response to the California Coast Viticultural Area Petition,'' detailing the reasons for the petition's denial is available on the ATF website or by U.S. mail as described below.

ADDRESSES: A copy of this notice (Notice No. 951) and a link to the 80-page supplemental report, ''ATF Response to the California Coast Viticultural Area Petition,'' detailing the reasons for the petition's denial, are available on the ATF website at: *http://www.atf.treas.gov/alcohol/rules/index.htm.*

Paper copies of the petition, the proposed regulation, the appropriate maps, the comments received in response to Notice No. 903, this notice (Notice No. 951), and the supplemental report are available for public inspection by appointment in the ATF Reading Room, Rm. 6480, 650 Massachusetts Avenue, NW., Washington, DC 20226; telephone (202) 927–7890.

To obtain paper copies of the supplemental report, the comments received, or any other of the above documents by mail (at 20 cents per page), contact the ATF Librarian at the above address.

FOR FURTHER INFORMATION CONTACT: Nancy Sutton, Specialist, Regulations Division (San Francisco, CA), Bureau of Alcohol, Tobacco and Firearms, 221 Main Street, 11th Floor, San Francisco, CA 94105; telephone (415) 947–5192.

SUPPLEMENTARY INFORMATION:

Background—Viticultural Areas

The Federal Alcohol Administration Act (FAA Act) at 27 U.S.C. 205(e) requires that alcohol beverage labels provide the consumer with adequate information regarding a product's identity and prohibits the use of deceptive information on such labels. The FAA Act also authorizes the Bureau of Alcohol, Tobacco and Firearms (ATF) to issue regulations to carry out its provisions.

Regulations in 27 CFR part 4, Labeling and Advertising of Wine, allow the establishment of definitive viticultural areas. The regulations allow the names of approved viticultural areas to be used as appellations of origin on wine labels and in wine advertisements. Section 4.25a(e)(1) defines an American viticultural area as a delimited grape-growing region distinguishable from surrounding areas by geographical features such as climate, elevation, soil, and topography.

ATF believes that viticultural area designations enable consumers to better identify the origin of the grapes used to produce a wine, provide significant information about the identity of a wine, and prevent consumer deception through the establishment of specific boundaries for viticultural areas. A list of approved viticultural areas is contained in 27 CFR part 9, American Viticultural Areas.

Any interested person may petition ATF to establish a grape-growing region as a viticultural area. The petition should include a description of area's proposed boundaries and United States Geological Survey maps with those boundaries prominently marked, as well as:

- Evidence that the name of the proposed viticultural area is locally and/or nationally known as referring to the area specified in the petition;
- Historical or current evidence that the boundaries of the viticultural area are as specified in the petition; and
- Evidence relating to the geographical characteristics (climate, soil, elevation, physical features, *etc.*), which distinguish the viticultural features of the proposed area from surrounding areas.

The petitioner bears the burden of providing evidence showing that a proposed viticultural area meets the regulatory requirements. ATF utilizes the proposed rulemaking process to facilitate the submission of additional information from the public showing that the proposed area does or does not comply with the regulatory requirements.

Background—California Coast Petition

1998 ''California Coastal'' Petition

In 1998, a group known as the Coastal Alliance submitted a petition to ATF requesting the establishment of the ''California Coastal'' viticultural area. The petitioned area's boundaries, extending along the California coastline north from Mexico into Mendocino County 175 miles south of the Oregon border, coincided with the established South Coast viticultural area's southern boundary and with the North Coast viticultural area's northern boundary.

ATF reviewed the petition and determined that the petitioned viticultural area did not meet the regulatory requirements. In the letter denying this petition, ATF noted that the ''California Coastal'' name could apply to the State's entire coastline and not just to the portion included in the petitioned area. ATF also determined that the petitioned viticultural area's geographic and climatic features were too diverse for it to be considered a delimited grape-growing region distinguishable from surrounding areas.

March 2000 ''California Coast'' Petition

The California Coast Alliance submitted a new petition to ATF on March 17, 2000, proposing the establishment of the ''California Coast'' viticultural area. The Alliance stated that the California Coast viticultural area would provide consumers with valuable information about the origin of wine made in this area and help prevent consumer deception from the growing

use of references to the California coast and coastal areas on wine labels.

The proposed California Coast viticultural area covered 22,000 square miles and spanned 650 miles along the Pacific coast, from the Mexican border north into Mendocino County in northern California, 175 miles south of the Oregon border. The petitioned area's inland width varied from approximately 5 to 68 miles. The petition's proposed boundary lines joined the established South Coast, Central Coast, San Francisco Bay, and North Coast viticultural areas and filled in the gaps between those established areas. The petitioned area included a total of 68 smaller, established viticultural areas.

Notice No. 903 and Resulting Comments

On September 26, 2000, ATF published a Notice of Proposed Rulemaking, Notice No. 903, in the **Federal Register** (65 FR 57763) soliciting public comments regarding the proposed California Coast viticultural area. In response to that notice, ATF received 477 comments from vineyard and winery owners, industry associations, city and county officials, and individuals. Of those commenting, 97% opposed the petition. These commenters stated that the petitioned area did not meet the regulatory requirements, and, if established, would threaten the California wine industry, jeopardize the viticultural area system, mislead consumers, and make the Estate-bottled claim less meaningful.

ATF Analysis of Petition and Comments

Prior to denying the California Coast viticultural area's establishment, ATF thoroughly reviewed all the information provided in the March 2000 petition and in the comments and documentation filed in response to Notice No. 903. The documentation and evidence provided by commenters and ATF's own research has established that the petitioned California Coast viticultural area fails to meet the regulatory requirements of 27 CFR, part 9, American Viticultural Areas.

Summary of the Reasons for Denial

The primary reasons for the denial of the California Coast viticultural area petition were:

- As commonly understood, the name ''California Coast'' applies to a longer coastal region than was included in the proposed area; and
- The significant climatic diversity found within the petitioned area due to its great north-south span.

Name Evidence

ATF has concluded that the California Coast viticultural area's petitioned boundary lines do not reflect the public's understanding of the ''California Coast'' name or meet the linguistic, geographic, or definition standards for viticultural areas or wine labeling purposes. ATF believes the term ''California Coast'' refers to the entire Pacific coastal area between Mexico and Oregon, and that no other use of the name, as related to a geographical area, can be considered accurate and true for viticultural area purposes.

Geographical Evidence

The geographical evidence presented in response to the Notice No. 903 shows that the proposed California Coast viticultural area is not a unified geographical area with viticultural features that distinguish it from surrounding areas. The area's proposed boundaries span almost 650 miles from north to south, and include shoreline, coastal plains, 5,000-foot high mountain ranges, and interior basins and valleys.

While the Pacific Ocean plays a dominate role in the California's coastal climate, the petitioned area's latitudinal span and differing ocean currents lead to significant climatic variations within it. Temperatures decrease, while rainfall and summer fog increase from south to north within the petitioned area. Two major ocean currents, the cold California Current flowing south from Alaska to Santa Barbara and the warmer Southern California Counter-Current flowing north from Mexico to Santa Barbara, are also responsible for the significantly different onshore coastal climates found within the petitioned area.

These factors are reflected in the petitioned area's differing climatic classifications. Experts classify the petitioned area's southern portion as a steppe or desert climate, while the central and northern portions are classified as a Mediterranean climate. ATF notes that even if the entire California coastline from Mexico to the Oregon border were included within a proposed viticultural area, such an area would likely have even greater climate diversity. Such a proposed area would, therefore, also not meet the regulatory criteria for an American viticultural area.

Supplemental Report Available

An 80-page report, ''ATF Response to the California Coast Viticultural Area Petition,'' containing a detailed analysis of the petition evidence, commenter information and documentation, under the requirements of 27 CFR 9.3(b)(1) through (3) for name evidence, boundary evidence, and geographical evidence, is available on the ATF Internet website at: *http://www.atf.treas.gov/alcohol/rules/index.htm.* Paper copies of the report are also available as described in the **ADDRESSES** section above.

Drafting Information

The principal author of this document is Nancy Sutton, Regulations Division, Bureau of Alcohol, Tobacco and Firearms. Michael D. Hoover provided editorial assistance.

Signed: July 29, 2002.

Bradley A. Buckles,

Director.

[FR Doc. 02–19829 Filed 8–6–02; 8:45 am]

BILLING CODE 4810–31–P

DEPARTMENT OF TRANSPORTATION

Coast Guard

33 CFR Part 117

[CGD07–02–077]

RIN 2115–AE47

Drawbridge Operation Regulations; Coronado Beach Bridge (SR 44), Intracoastal Waterway, New Smyrna Beach, FL

AGENCY: Coast Guard, DOT.

ACTION: Notice of proposed rulemaking.

SUMMARY: The Coast Guard proposes to change the operating regulations of the Coronado Beach drawbridge (SR 44), Intracoastal Waterway mile 845, New Smyrna Beach, Florida. This proposed rule would require the drawbridge to open on signal, except that from 7 a.m. until 7 p.m. each day of the week, the draw need only open on the hour, twenty minutes past the hour and forty minutes past the hour. This action is intended to improve the movement of vehicular traffic while not unreasonably interfering with the needs of navigation.

DATES: Comments and related material must reach the Coast Guard on or before October 7, 2002.

ADDRESSES: You may mail comments and related material to Commander (obr), Seventh Coast Guard District, 909 SE. 1st Avenue, Room 432, Miami, FL 33131. Comments and material received from the public, as well as documents indicated in this preamble as being available in the docket, are part of docket [CGD07–02–077] and are available for inspection or copying at

Commander (obr), Seventh Coast Guard District, 909 SE. 1st Avenue, Miami, FL 33131 between 8 a.m. and 4:30 p.m., Monday through Friday, except Federal holidays.

FOR FURTHER INFORMATION CONTACT: Mr. Barry Dragon, Bridge Branch, 909 SE 1st Ave, Miami, FL 33131, telephone number 305–415–6743.

SUPPLEMENTARY INFORMATION:

Request for Comments

We encourage you to participate in this rulemaking by submitting comments and related material. If you do so, please include your name and address, identify the docket number for this rulemaking [CGD07–02–077], indicate the specific section of this document to which each comment applies, and give the reason for each comment. Please submit all comments and related material in an unbound format, no larger than 8½ by 11 inches, suitable for copying. If you would like to know they reached us, please enclose a stamped, self-addressed postcard or envelope. We will consider all comments and material received during the comment period. We may change this proposed rule in view of them.

Public Meeting

We do not now plan to hold a public meeting. But you may submit a request for a meeting by writing to Bridge Branch, Seventh Coast Guard District, 909 SE 1st Ave, Room 432, Miami, FL 33131, explaining why one would be beneficial. If we determine that one would aid this rulemaking, we will hold one at a time and place announced by a later notice in the **Federal Register**.

Background and Purpose

The Coronado Beach bascule bridge is a two-lane, narrow, undivided arterial roadway. This roadway is severely congested due to insufficient vehicular capacity. The existing operating schedule is published in 33 CFR 117.5 and requires the bridge to open on demand. This proposed rule would continue to require the drawbridge to open on signal, except that from 7 a.m. until 7 p.m. each day of the week, the draw need only open on the hour, twenty minutes past the hour and forty minutes past the hour.

Discussion of Proposed Rule

In order to meet the reasonable needs of vehicular traffic while not significantly impacting navigation, the Coast Guard proposes to allow the Coronado Beach bridge (SR 44) to open on signal, except that from 7 a.m. until 7 p.m. each day of the week, the bridge need open only on the hour, twenty minutes past the hour and forty minutes past the hour. This proposed rule would facilitate the movement of vehicle traffic across the bridge while not unreasonably interfering with or decreasing vessel safety while awaiting passage through the draw.

Regulatory Evaluation

This proposed rule is not a ''significant regulatory action'' under section 3(f) of Executive Order 12866, Regulatory Planning and Review, and does not require an assessment of potential costs and benefits under section 6(a)(3) of that Order. The Office of Management and Budget has not reviewed it under that Order. It is not significant under the regulatory policies and procedures of the Department of Transportation (DOT) (44 FR 11040, February 26, l979) because this proposed rule only modifies the existing bridge operation schedule during heavy vehicle traffic hours and still provides for regular openings.

Small Entities

Under the Regulatory Flexibility Act (5 U.S.C. 601–612), we considered whether this proposed rule would have a significant economic impact on a substantial number of small entities. The term ''small entities'' comprises small businesses, not-for-profit organizations that are independently owned and operated and are not dominant in their fields, and governmental jurisdictions with populations of less than 50,000.

This proposed rule may affect the following entities, some of which might be small entities: the owners or operators of vessels and vehicles intending to transit under and over the Coronado Beach bridge (SR 44) during the hours of 7 a.m. to 7 p.m. The Coast Guard certifies under 5 U.S.C. 605(b) that this proposed rule would not have a significant economic impact on a substantial number of small entities because this proposed rule only slightly modifies the existing bridge operation schedule and still provides for regular bridge openings.

If you think that your business, organization, or governmental jurisdiction qualifies as a small entity and that this proposed rule would have a significant economic impact on it, please submit a comment (see **ADDRESSES**) explaining why you think it qualifies and how and to what degree this rule would economically affect it.

Assistance for Small Entities

Under section 213(a) of the Small Business Regulatory Enforcement Fairness Act of 1996 (Public Law 104–121), we want to assist small entities in understanding this proposed rule so that they can better evaluate its effects on them and participate in the rulemaking. If the rule would affect your small business, organization, or governmental jurisdiction and you have questions concerning its provisions or options for compliance, please contact the person listed under **FOR FURTHER INFORMATION CONTACT**.

Small businesses may send comments on the actions of Federal employees who enforce, or otherwise determine compliance with, Federal regulations to the Small Business and Agriculture Regulatory Enforcement Ombudsman and the Regional Small Business Regulatory Fairness Boards. The Ombudsman evaluates these actions annually and rates each agency's responsiveness to small business. If you wish to comment on actions by employees of the Coast Guard, call 1–888-REG-FAIR (1–888–734–3247).

Collection of Information

This proposed rule would call for no new collection of information under the Paperwork Reduction Act of 1995 (44 U.S.C. 3501–3520).

Federalism

A rule has implications for federalism under Executive Order 13132, Federalism, if it has a substantial direct effect on State or local governments and would either preempt State law or impose a substantial direct cost of compliance on them. We have analyzed this proposed rule under that Order and have determined that it does not have implications for federalism.

Unfunded Mandates Reform Act

The Unfunded Mandates Reform Act of 1995 (2 U.S.C. 1531–1538) requires Federal agencies to assess the effects of their discretionary regulatory actions. In particular, the Act addresses actions that may result in the expenditure by a State, local, or tribal government, in the aggregate, or by the private sector of $100,000,000 or more in any one year. Although this proposed rule will not result in such an expenditure, we do discuss the effects of this rule elsewhere in this preamble.

Taking of Private Property

This proposed rule would not effect a taking of private property or otherwise have taking implications under Executive Order 12630, Governmental Actions and Interference with Constitutionally Protected Property Rights.

Civil Justice Reform

This proposed rule meets applicable standards in sections 3(a) and 3(b)(2) of Executive Order 12988, Civil Justice Reform, to minimize litigation, eliminate ambiguity, and reduce burden.

Protection of Children

We have analyzed this proposed rule under Executive Order 13045, Protection of Children from Environmental Health Risks and Safety Risks. This proposed rule is not an economically significant rule and does not create an environmental risk to health or risk to safety that may disproportionately affect children.

Environment

We considered the environmental impact of this proposed rule and concluded that, under figure 2–1, paragraph (32)(e) of Commandant Instruction M16475.lD, this proposed rule is categorically excluded from further environmental documentation.

Indian Tribal Governments

This proposed rule does not have tribal implications under Executive Order 13175, Consultation and Coordination with Indian Tribal Governments, because it does not have a substantial direct effect on one or more Indian tribes, on the relationship between the Federal Government and Indian tribes, or on the distribution of power and responsibilities between the Federal Government and Indian tribes.

Energy Effects

We have analyzed this proposed rule under Executive Order 13211, Actions Concerning Regulations That Significantly Affect Energy Supply, Distribution, or Use. We have determined that it is not a ''significant energy action'' under that order because it is not a ''significant regulatory action'' under Executive Order 12866 and is not likely to have a significant adverse effect on the supply, distribution, or use of energy. It has not been designated by the Administrator of the Office of Information and Regulatory Affairs as a significant energy action. Therefore, it does not require a Statement of Energy Effects under Executive Order 13211.

List of Subjects in 33 CFR Part 117

Bridges.

For the reasons discussed in the preamble, the Coast Guard proposes to amend 33 CFR part 117 as follows:

PART 117—DRAWBRIDGE OPERATION REGULATIONS

1. The authority citation for part 117 continues to read as follows:

Authority: 33 U.S.C. 499; 49 CFR 1.46; 33 CFR 1.05–1(g); Section 117.255 also issued under authority of Pub. L. 102–587, 106 Stat. 5039.

2. Section 117.261(ss) is added to read as follows:

§ 117.261 Atlantic Intracoastal Waterway from St. Marys River to Key Largo.

* * * * *

(ss) *Coronado Beach bridge (SR 44), mile 845, New Smyrna Beach, Florida.* The Coronado Beach bridge (SR 44), mile 845, shall open on signal, except that from 7 a.m. until 7 p.m. each day of the week, the draw need only open on the hour, twenty minutes past the hour and forty minutes past the hour.

Dated: July 24, 2002.

James S. Carmichael,

Rear Admiral, U.S. Coast Guard, Commander, Seventh Coast Guard District.

[FR Doc. 02–19998 Filed 8–6–02; 8:45 am]

BILLING CODE 4910–15–P

DEPARTMENT OF TRANSPORTATION

Coast Guard

33 CFR Part 155

[USCG–1998–3417]

RIN 2115–AF60

Salvage and Marine Firefighting Requirements; Vessel Response Plans for Oil

AGENCY: Coast Guard, DOT.

ACTION: Proposed rulemaking; notice of public meeting; notice of extension of comment period.

SUMMARY: The Coast Guard is announcing a public meeting to discuss its previously published notice of proposed rulemaking (NPRM) titled ''Salvage and Marine Firefighting Requirements; Vessel Response Plans for Oil'' (67 FR 40254). The Coast Guard is also announcing the extension of the comment period for the NPRM, and updating the point-of-contact for this rulemaking project.

DATES: Comments must reach the Coast Guard on or before October 18, 2002. The public meeting will be held in Louisville, KY, on September 26, 2002. The meeting may conclude before the allotted time if all matters of discussion have been addressed.

ADDRESSES: The public meeting will be held at the following location:

Louisville, KY—The Galt House Hotel (West Tower), Court Room (2nd Floor), 140 North Fourth Avenue, Louisville, KY, 40202.

Please submit your comments and related material(s) by any one of the following methods (choose only one method of delivery in order to avoid multiple listings in the public docket):

- By mail to the Docket Management Facility [USCG–1998–3417], U.S. Department of Transportation, room PL–401, 400 Seventh Street SW, Washington, DC 20590–0001;
- By delivery to room PL–401 on the Plaza level of the Nassif Building, 400 Seventh Street SW, Washington, DC, between 9 a.m. and 5 p.m., Monday through Friday, except Federal holidays;
- By fax to the Docket Management Facility at 202–493–2251; or
- Electronically through the website for the Docket Management System at *http://dms.dot.gov.*

FOR FURTHER INFORMATION CONTACT: If you have questions concerning this proposed rulemaking, please contact Lieutenant Commander Paul Albertson, Office of Response, Response Operations Division, Coast Guard Headquarters, at 202–267–0423, or via e-mail at *PAlbertson@comdt.uscg.mil.* If you have questions on viewing or submitting material(s) to the docket, please call Ms. Dorothy Beard, Chief, Dockets, Department of Transportation, at 202–366–5149.

SUPPLEMENTARY INFORMATION:

Request for Comments

We encourage you to participate in this rulemaking by submitting comments and related material(s). If you do so, please include your name and address, identify the docket number for this rulemaking [USCG–1998–3417], indicate the specific section of this document to which each comment applies, and give the reason for each comment. Please submit all comments and related material(s) in an unbound format, no larger than 8½ by 11 inches, suitable for copying. If you would like to receive confirmation that your submission reached us, please enclose a stamped, self-addressed postcard or envelope. We will consider all comments and material(s) received during the comment period.

Regulatory History

A notice of proposed rulemaking (NPRM) was published in the **Federal Register** on May 10, 2002 (67 FR 31868), entitled ''Salvage and Marine Firefighting Requirements; Vessel Response Plans for Oil.'' Subsequent to that publication, the Coast Guard

published a notice of public meeting in the **Federal Register** on June 12, 2002 (67 FR 40254).

In response to the NPRM, the Coast Guard received requests to extend the comment period, which would provide the public with additional time to submit their comments. Independent of these requests, the Coast Guard determined that an additional public meeting was necessary in order to allow for greater public involvement. We are extending the comment period to accommodate the date of this fourth meeting, and to provide additional time as requested in response to the NPRM.

Please do not resubmit comments that have already been submitted to this docket. The NPRM and comments already received may be viewed at *http://dms.dot.gov.*

Background and Purpose

In the NPRM, we proposed to revise the vessel response plan salvage and marine firefighting requirements for tank vessels transporting oil. The revisions would clarify the salvage and marine firefighting services that must be identified in vessel response plans. The proposed changes would insure that the appropriate salvage and marine firefighting resources are identified and available for responding to incidents up to, and including, the worst-case scenario. The proposed rulemaking would also set new response time requirements for each of the required salvage and marine firefighting services.

Public Meeting

The Coast Guard will hold an additional public meeting regarding this proposed rulemaking on the following date and at the following location:

Louisville, KY, September 26, 2002, from 9:30 a.m. to 4 p.m., at The Galt House Hotel (West Tower), Court Room (2nd Floor), 140 North Fourth Avenue, Louisville, KY, 40202.

The meeting may conclude before the allotted time if all matters of discussion have been addressed.

A summary of comments made and a list of attendees will be available on the docket after the meeting concludes.

Dated: August 2, 2002.

Joseph J. Angelo,

Director of Standards, Marine Safety, Security & Environmental Protection.

[FR Doc. 02–19910 Filed 8–2–02; 2:01 pm]

BILLING CODE 4910–15–P

Notices

Federal Register

Vol. 67, No. 152

Wednesday, August 7, 2002

This section of the FEDERAL REGISTER contains documents other than rules or proposed rules that are applicable to the public. Notices of hearings and investigations, committee meetings, agency decisions and rulings, delegations of authority, filing of petitions and applications and agency statements of organization and functions are examples of documents appearing in this section.

DEPARTMENT OF AGRICULTURE

Submission for OMB Review; Comment Request

August 1, 2002.

The Department of Agriculture has submitted the following information collection requirement(s) to OMB for review and clearance under the Paperwork Reduction Act of 1995, Public Law 104–13. Comments regarding (a) whether the collection of information is necessary for the proper performance of the functions of the agency, including whether the information will have practical utility; (b) the accuracy of the agency's estimate of burden including the validity of the methodology and assumptions used; (c) ways to enhance the quality, utility and clarity of the information to be collected; (d) ways to minimize the burden of the collection of information on those who are to respond, including through the use of appropriate automated, electronic, mechanical, or other technological collection techniques or other forms of information technology should be addressed to: Desk Officer for Agriculture, Office of Information and Regulatory Affairs, Office of Management and Budget (OMB), Washington, DC 20503 *and* to Departmental Clearance Office, USDA, OCIO, Mail Stop 7602, Washington, DC 20250–7602. Comments regarding these information collections are best assured of having their full effect if received within 30 days of this notification. Copies of the submission(s) may be obtained by calling (202) 720–6746.

An agency may not conduct or sponsor a collection of information unless the collection of information displays a currently valid OMB control number and the agency informs potential persons who are to respond to the collection of information that such persons are not required to respond to the collection of information unless it displays a currently valid OMB control number.

Office of the Chief Financial Officer

Title: Debt Collection.

OMB Control Number: 0505–0007.

Summary of Collection: The Debt Collection Act of 1982 requires that any monies that are payable or may become payable from the United States under contracts and other written agreements to any person or legal entity not an agency or subdivision of a State or local government may be subject to administrative offset for the collection of a delinquent debt the person or a legal entity owes to the United States. Section 10 requires that debtors be provided due process prior to the collection of any claims through administrative offset. Delinquent debtors wishing to appeal must provide relevant information. USDA agencies will collect information using a letter of intent from the creditor agencies to delinquent debtors.

Need and Use of the Information: USDA agencies will collect information on delinquent debtors targeted for administrative offset who want additional information; wish to enter into repayment agreements; or wish to request a review of agencies' determination to offset appropriation act. The creditor agencies will not be able to comply with the due process provision of the Debt Collection Act or the Debt Collection Improvement Act if relevant information is not collected.

Description of Respondents: Individuals or households; Business or other for-profit; Farms.

Number of Respondents: 3,771.

Frequency of Responses: Reporting: On occasion.

Total Burden Hours: 7,542.

Agricultural Research Service

Title: Utilization of Food and Nutrition Information Center (FNIC) Resources by Personnel at Schools Receiving USDA Funds for Child Nutrition Programs.

OMB Control Number: 0518–NEW.

Summary of Collection: The Food and Nutrition Information Center (FNIC) does not have a means to determine the use of FNIC resources by personnel at schools receiving USDA funds for Child Nutrition Programs. To collect this information, FNIC proposes to provide attendees of selected educated related conferences with a password to access a one-time, voluntary, electronic FNIC Resources usage survey. The information collected in this survey will assist FNIC staff in improving the resources provided to meet the needs of the targeted audience. The authority to collect this information is CFR, Title 7, Volume 1, part 2, subpart K, Sec. 2.65 (92).

Need and Use of the Information: FNIC will collect information to evaluate current FNIC resources and assist in planning and managing future projects. Failure to collect this information would inhibit FNIC's ability to ensure the resources FNIC provides are in accord with resources desired by targeted patron groups, such as personnel in schools participating in Child Nutrition Programs.

Description of Respondents: Not-for-profit institutions.

Number of Respondents: 200.

Frequency of Responses: Reporting: On occasion.

Total Burden Hours: 50.

Farm Service Agency

Title: Standard Operating Agreement Governing Intermodal Transportation.

OMB Control Number: 0560–194.

Summary of Collection: The 49 U.S.C. authorizes the Kansas City Commodity Office, Export Operations Division (KCCO/EOD) to collect information to determine the eligibility of Intermodal Marketing Companies (IMC) to haul agricultural products for the USDA Farm Service Agency (FSA). For an IMC to participate in CCC freight, FSA requires a certificate of insurance to be filed with KCCO, EOD. IMC's are also required to furnish documentation from a rail company verifying that it has an ongoing business relationship with at least one rail company. The IMC shall complete KCCO's Standard Operating Agreement Governing Intermodal Transportation. The Standard Operating Agreement sets out operating rules for intermodal shipment, accessorial charges, and the terms and conditions of carriage.

Need and Use of the Information: FSA will collect information by mail to establish the Trailer on Flatcar/Container on Flatcar (TORC/COFC) service needs of the Department of Agriculture, Farm Service Agency, the Kansas City Commodity Office, operating as Commodity Credit Corporation, for the movement of its freight, and to insure that an IMC

arranging for the transportation service has both the willingness and the capability to meet those needs. Without this information, FSA and KCCO could not meet program requirements.

Description of Respondents: Business or other for-profit; Federal; Not-for-profit institutions; State, Local or Tribal Government.

Number of Respondents: 14.

Frequency of Responses: Reporting: Other (Once).

Total Burden Hours: 14.

Farm Service Agency

Title: Representations for CCC and FSA Loans and Authorization to File a Financing Statement.

OMB Control Number: 0560–0215.

Summary of Collection: The revised Article 9 of the Uniform Commercial Code deals with secured transaction for personal property. The revised Article 9 will affect the manner in which the Commodity Credit Corporation (CCC) and the Farm Service Agency (FSA), as well as any other creditor, perfect and liquidate security interests in collateral. FSA operates several loan programs that are affected by the revision to Article 9 of the Uniform Commercial Code. Each of the programs requires that loans be secured with collateral. The security interest is created and attaches to the collateral when: (1) Value has been given, (2) the debtor has rights in the collateral or the power to transfer rights in the collateral, and (3) the debtor has authenticated a security agreement that provides a description of the collateral. FSA will collect information using form CCC–10. The information obtained on CCC–10 is needed to obtain authorization from loan applicants to file a financing statement and to verify the name and location of the debtor.

Need and Use of the Information: The information that FSA collects will be used to gather or verify basic data regarding the applicant which is required on a financing statement and to obtain permission to file a financing statement prior to the execution of a security agreement. Without obtaining the information from loan applicants, CCC and FSA would be unable to perfect a security interest in collateral used to secure loans.

Description of Respondents: Farms; Individuals or households; Business or other for-profit.

Number of Respondents: 207,500.

Frequency of Responses: Reporting; On occasion.

Total Burden Hours: 120,350.

Animal and Plant Health Inspection Service

Title: Endangered Species Regulations and Forfeiture Procedures.

OMB Control Number: 0579–0076.

Summary of Collection: The Endangered Species Act of 1973 (16 U.S.C. 1513 *et seq.*) directs Federal departments to utilize their authorities under the Act to conserve endangered and threatened species. Section 3 of the Act specifies that the Secretary of Agriculture is authorized to promulgate such regulations as may be appropriate to enforce the Act. The regulations contained in 7 CFR 355 are intended to carry out the provisions of the Act. The Plant Protection and Quarantine (PPQ) division of USDA's Animal & Plant Health Inspection Service (APHIS) is responsible for implementing these regulations. Specifically, section 9(d) of the Act authorizes 7 CFR 355.11, which requires a general permit to engage in the business of importing or exporting terrestrial plants listed in 50 CFR Parts 17 and 23. APHIS will collect information using PPQ forms 368, 621, 625, 623, and 626.

Need and Use of the Information: APHIS will collect information on the applicant's name and address, whether the applicant is affiliated with a business, and the address of all the applicant's business locations in order for the applicant to obtain a general permit. Upon approval of the permit, any endangered species shipped via mail must be sent to an authorized port of entry and must be accompanied by appropriate supporting documentation.

Description of Respondents: Business or other for-profit.

Number of Respondents: 1,400.

Frequency of Responses: Recordkeeping; Reporting: On occasion.

Total Burden Hours: 4,738.

Animal and Plant Health Inspection Service

Title: 9 CFR 50 & 77, Tuberculosis.

OMB Control Number: 0579–0084.

Summary of Collection: Title 21 U.S.C. authorizes the Secretary of Agriculture to prevent, control and eliminate domestic diseases such as tuberculosis, as well as to take actions to prevent and to manage exotic diseases such as hog cholera, African swine fever, and other foreign diseases. The Animal and Plant Health Inspection Service (APHIS) oversees the Cooperative State-Federal Bovine Tuberculosis Eradication Program to eliminate bovine tuberculosis, a serious disease of livestock. The disease also affects man through contracts with infected animals or their byproducts. APHIS works with State and other federal organizations to conduct epidemiologic investigations to locate bovine tuberculosis and provide a means of controlling it. Information is collected using a variety of forms to properly identify, test, and transport animals that are infected with or exposed to tuberculosis.

Need and Use of the Information: APHIS will collect information to search for infected herds, maintain identification of livestock, monitor deficiencies in identification of animals for movement, and monitor program deficiencies in suspicious and infected herds. Continued collection of this information is essential for program progress aimed at controlling and eradicating bovine tuberculosis.

Description of Respondents: Business or other for-profit; Farms; State, Local or Tribal Government.

Number of Respondents: 6,897.

Frequency of Responses: Reporting: On occasion.

Total Burden Hours: 17,372.

Animal and Plant Health Inspection Service

Title: Wood Packing Material from China.

OMB Control Number: 0579–0135.

Summary of Collection: The United States Department of Agriculture is responsible for preventing plant diseases or insect pests from entering the United States, preventing the spread of pests not widely distributed in the United States, and eradicating those imported pests when eradication is feasible. The Plant protection Act authorizes the Department to carry out this mission. Section 102 of the Organic Act (7 U.S.C. 147a) states, in part that the ''the Secretary of Agriculture, either independently or in cooperation with the States * * * is authorized to carry out operations or measures to detect, eradicate, suppress, control, prevent, or retard the spread of plant pests. Effective January 1, 2002, the People's Republic of China required that Solid Wood Packing Material (SWPM) exported from the United States to China be certified as having been heat treated. To be certified, coniferous SWPM must be heat treated in the United States. The rule changed that requirement to allow Canadian-origin coniferous SWPM to be heat treated in Canada. Implementing the laws is necessary in order to prevent injurious insect pests and plant diseases from entering the United States. Solid wood items used to pack commodities imported from China must first be heat treated, fumigated, or treated with preservations before they leave China for the United States.

Need and Use of the Information: The Animal and Plant Health Inspection Service (APHIS) will collect information from the Treatment Certificate and

Exporter Document that will provide information that will enable APHIS inspectors to focus their attention on those shipments that present the most risk of harboring exotic insect pests (*i.e.,* those shipments that contain solid wood packing material, as opposed to those shipments that do not). Failure to collect this information would cripple APHIS ability to ensure that solid wood packing material from China does not harbor destructive plant pests.

Description of Respondents: Business or other for-profit; Individuals or households; State, Local or Tribal Government.

Number of Respondents: 29,000.

Frequency of Responses: Reporting: On occasion.

Total Burden Hours: 73,950.

Animal and Plant Health Inspection Service

Title: ISA Payment of Indemnity.

OMB Control Number: 0579–0192.

Summary of Collection: Federal regulation contained in 9 CFR Subchapter B governs cooperative programs in control and eradicate communicable diseases of livestock from the United States. In accordance with 21 U.S.C. 111, 113, 114, 115, 117, 120, 123, and 134a, the Secretary of Agriculture has the authority to promulgate regulations and take measures to prevent the introduction into the United States and the interstate dissemination within the United States of communicable disease of livestock and poultry, and to pay claims growing out of the destruction of animals. Disease prevention is the most effective method for maintaining a healthy animal population and enhancing APHIS' ability to compete in exporting animals and animal products. Veterinary Services, a unit within USDA's Animal and Plant Health Inspection Service (APHIS), is charged with carrying out this disease prevention mission. Infectious Salmon Anemia (ISA) poses a substantial threat to the economic viability and sustainability of salmon aquaculture in the United States and abroad. In an effort to control ISA in the State of Maine, to prevent further breakouts in that State, and to prevent the disease from spreading to other parts of the United States, APHIS is publishing an interim rule to provide for the payment of indemnity to producers in the State of Maine for fish destroyed because of ISA. APHIS will collect information using VS Form 1–22 ISA Program Enrollment Form and VS Form 1–23 All Species Appraisal & Indemnity Claim Form.

Need and Use of the Information: Each program participant must sign an ISA Program Enrollment Form in which they agree to participate fully in USDA's and the State of Maine's ISA Program. APHIS will collect the owner's name and address, the number of fish for which the owner is seeking payment, and the appraised value of each fish. The owner must also certify as to whether the fish are subject to a mortgage. Without the information it would be impossible for APHIS to launch a program to contain and prevent ISA outbreaks in the United States.

Description of Respondents: Business or other for-profit; Individuals or households.

Number of Respondents: 110.

Frequency of Responses: Reporting: On occasion.

Total Burden Hours: 2,934.

Food and Nutrition Service

Title: Food Stamp Program—Store Applications.

OMB Control Number: 0584–0008.

Summary of Collection: The Food Stamp Program (FSP) is designed to promote the general welfare and safeguard the health and well being of the Nation's population by raising levels of nutrition among low-income households. Section 9 of the Food Stamp Act of 1977, as amended, (the Act) (7 U.S.C. 2011 *et. seq.*) requires that the Food and Nutrition Service (FNS) provide for the submission of applications for approval by retail food establishments and meal service programs that wish to participate in the FSP. The need to collect information is established under the Act to determine the eligibility of retail food stores, wholesale food concerns, and food service organizations applying for authorization to accept and redeem food stamp benefits, to monitor these firms for continued eligibility, to sanction stores for non-compliance with the Act, and for program management. FNS will collect information using forms FNS–252, Food Stamp Application for Tore, and FNS 252–2, Application to Participate in the Food Stamp Program for Communal Dining Facility/Others.

Need and Use of the Information: FNS will collect information to determine a firm's eligibility for participation in the FSP, program administration, compliance monitoring and investigations, and for sanctioning stores found to be violating the program. FNS is also responsible for requiring updates to application information and reviewing that information to determine whether or not the retail food store, wholesale food concern, or food service organization continues to meet eligibility requirements. Owners Employer Identification Numbers (EIN) and Social Security Numbers (SSN) may be disclosed to and used by Federal agencies or instrumentalities that otherwise gave access to EINs and SSNs. FNS and other Federal Government agencies examine such information during compliance reviews, audit review, special studies or evaluation efforts.

Description of Repondents: Business or other for-profit; Not-for-profit institutions; Farms; Federal Government.

Number of Respondents: 20,299.

Frequency of Responses: Reporting: On occasion.

Total Burden Hours: 9,050.

Food and Nutrition Service

Title: 7 CFR Part 235 State Administrative Expense Funds.

OMB Control Number: 0584–0067.

Summary of Collection: Because the Food and Nutrition Service (FNS) is accountable for State Administrative Expense (SAE) funds by fiscal year, State agencies (SAs) are requested to report their SEA budget information on that basis. If the State budgets coincide with a fiscal year other than that used by the Federal government, the SA must convert its State budget figures to amounts to be used during the applicable Federal fiscal year for this purpose. Under 7 CFR Part 235, State Administrative Expense Funds, there are five reporting requirements, which necessitate the collection of information. They are as follows: SAE Plan, Reallocation Report, Coordinated Review Effort (CRE) Data Base Update, Report of SAE Funds Usage, and Responses to Sanctions. SAs also must maintain records pertaining to SEA. These include Ledger Accounts, Source Documents, Equipment to SAE. These include Ledger Accounts, Source Documents, Equipment Records and Record on State Appropriated Funds. FNS will collect information using forms FNS–74 and 525.

Need and Use of the Information: FNS will collect information on the total SAE cost the SA expects to incur in the course of administering the Child Nutrition Programs (CNP); the indirect cost rate used by the SA in charging indirect cost to SEA, together with the name of the Federal agency that assigned the rate and the date the rate was assigned, breakdown of the current year's SAE budget between the amount allocated for the current year and the amount carried over from the prior year; and the number and types of personnel currently employed in administering the

CNPs. The information is used to determine whether SA intends to use SEA funds for purposes allowable under OMB Circular A–87, Cost Principles for State and Local Governments; does SA's administrative budget provide for sufficient funding from State sources to meet the Maintenance of Effort requirement; and is SA's staff adequate to effectively administer the program covered by the SA's agreement with FNS.

Description of Respondents: State, Local or Tribal Government.

Number of Resondents: 87.

Frequency of Responses: Recordkeeping; Reporting: Annually.

Total Burden Hours: 12,922.

Food and Nutrition Service

Title: Waivers Under Section 6(o) of the Food Stamp Act.

OMB Control Number: 0584–0479.

Summary of Collection: Section 824 of the Personal Responsibility and Work Opportunity Reconciliation Act of 1996, Pub. L. 104–193 (PRWORA) establishes a time limit for the receipt of food stamp benefits for certain able-bodied adults who are not working. In areas where the unemployment rate is over 10 percent or does not have a sufficient number of jobs to provide employment for the individuals, the Secretary of Agriculture has the authority to waive the provision for any group of individuals, upon receiving a State agency's request.

Need and Use of the Information: Food and Nutrition Service use the information provided by State food stamp agencies to evaluate whether the statutory requirements for a waiver of the food stamp time limit have been met and to determine specifically whether the designated areas' unemployment rate is over 10 percent or if there is a lack of sufficient jobs available. If the information is not collected, the State Food Stamp agencies could not obtain waivers of time limits contained in Section 6(o) of the Act.

Description of Respondents: State, Local or Tribal Government; Individuals or household.

Number of Respondents: 42.

Frequency of Responses: Reporting: On occasion; Annually.

Total Burden Hours: 148.

Animal and Plant Health Inspection Service

Title: Phytopthora Ramorum; Quarantine and Regulations.

OMB Control Number: 0579–0191.

Summary of Collection: The United States Department of Agriculture is responsible for preventing plant diseases or insect pests from entering the United States, preventing the spread of pests not widely distributed in the United States, and eradicating those imported pests when eradication is feasible. The Plant Protection Act authorizes the Department to carry out this mission. The regulations were amended to quarantine portions of California and Oregon because of Phytophthora Ramorum (PR) and restrict the interstate movement of regulated and articles from quarantined areas. This is necessary to prevent the spread of PR to noninfested areas of the United States.

Need and Use of the Information: APHIS will collect information to protect U.S. nursery stock and other plant resources from the potential introduction of plant pests into the country. If the information were not collected, APHIS ability to verify that imported nursery stock does not present a significant risk of introducing plant pests to the U.S. would be severely hampered.

Description of Respondents: Business or other for-profit; Individuals or households; Farms; Federal Government; State, Local or Tribal Government.

Number of Respondents: 387.

Frequency of Responses: Recordkeeping; Reporting; On occasion.

Total Burden Hours: 1,227.

Rural Housing Service

Title: 7 CFR Part 3565, ''Guaranteed Rural Rental Housing Program'' and its Supporting Handbook.

OMB Control Number: 0575–0174.

Summary of Collection: On March 26, 1996, the Housing Opportunity Program Extension Act of 1996 was signed. One of the provisions of the Act was the authorization of the section 538 Guaranteed Rural Rental Housing Program (GRRHP), adding the program to the Housing Act of 1949. The purpose of the GRRHP is to increase the supply of affordable rural rental housing through the use of loan guarantees that encourage partnerships between the Rural Housing Service (RHS), private lenders and public agencies. RUS will approve qualified lenders to participate and monitor lender performance to ensure program requirements are met. RHS will collect information from lenders on the eligibility cost, benefits, feasibility, and financial performance of the proposed project.

Need and Use of the Information: RHS will collect information from lenders to manage, plan, evaluate, and account for Government resources. The GRRHP regulation and handbook will provide lenders and agency staff with guidance on the origination and servicing of GRRHP loans and the approval of qualified lenders. RHS will use the information to evaluate a lender's request and make a determination that the interests of the government are protected. Failure to collect information could have an adverse impact on the agency ability to monitor lenders and assess program effectiveness and effectively guarantee loans.

Description of Respondents: Business or other for-profit; Not-for-profit institutions.

Number of Respondents: 50.

Frequency of Responses: Reporting: Quarterly; Monthly; Annually.

Total Burden Hours: 1581.

Farm Service Agency

Title: Standard Rules Tender Governing Motor Carrier Transportation.

OMB Control Number: 0560–0195.

Summary of Collection: Public Law 104–88 authorizes the Export Operation Division (EOD) to collect information to determine motor carrier compliance with Kansas City Commodity Office (KCCO) requirements, to determine eligibility of motor carriers to haul agricultural products for the USDA. A motor carrier shall complete KCCO's Standard Rules Tender Governing Motor Carrier Transportation and file its rates with EOD. The Standard Rules Tender set the operating rules for the motor carrier to determine motor carrier compliance, accessorial charges, and the terms and conditions of carriage. Carriers are selected based on their rate and service levels. The information enables KCCO to evaluate the rates to obtain transportation services to meet domestic and export program needs.

Need and Use of the Information: FSA will collect information to establish the motor carrier's qualifications, and carriage rates and conditions. Without this information FSA and KCCO could not obtain transportation services to meet program requirements.

Description of Respondents: Business or other for-profit, Not-for-profit institutions; Federal Government; State, Local or Tribal Government.

Number of Respondents: 99.

Frequency of Responses: Reporting: Once.

Total Burden Hours: 99.

Agricultural Research Service

Title: Utilization of Food and Nutrition Information Center (FNIC) Resources by Personnel at Schools Receiving USDA Funds for Child Nutrition Programs.

OMB Control Number: 0518–NEW.

Summary of Collection: The food and Nutrition Information Center (FNIC) does not have a means to determine the

use of FNIC resources by personnel at schools receiving USDA funds for Child Nutrition Programs. To collect this information, FNIC proposes to provide attendees of selected educated related conferences with a password to access a one-time, voluntary, electronic FNIC Resources usage survey. The information collected in this survey will assist FNIC staff in improving the resources provided to meet the needs of the targeted audience. The authority to collect this information is CFR, Title 7, Volume 1, Part 2, Subpart K, Sec. 2.65 (92).

Need and Use of the Information: FNIC will collect information to evaluate current FNIC resources and assist in planning and managing future projects. Failure to collect this information would inhibit FNIC's ability to ensure the resources FNIC provides are in accord with resources desired by targeted patron groups, such as personnel in schools participating in Child Nutrition Programs.

Description of Respondents: Not-for-profit institutions.

Number of Respondents: 200.

Frequency of Responses: Reporting: On occasion.

Total Burden Hours: 50.

Animal and Plant Health Inspection Service

Title: CWD in Cervids; Payment of Indemnity.

OMB Control Number: 0579–0189.

Summary of Collection: Federal regulations contained in 9 CFR Subchapter B govern cooperative programs to control and eradicate communicable diseases of livestock from the United States. In accordance with 21 U.S.C. 111–113, 114, 115, 117, 120, 123, and 134a, the Secretary of Agriculture has the authority to promulgate regulations and take measures to prevent the introduction into the United States and the interstate dissemination within the United States of communicable diseases of livestock and poultry, and to pay claims growing out of the destruction of animals. Disease prevention is the most effective method for maintaining a health animal population and enhancing our ability to complete in exporting animals and animal products. Veterinary Services, a unit within USDA's Animal and Plant Health Inspection Service (APHIS), is charged with carrying out this disease prevention mission. Chronic wasting disease (CWD) is a transmissible spongiform encephalopathy (TSE) of elk and deer typified by chronic weight loss leading to death. The presence of chronic wasting disease in cervids causes significant economic and market losses to U.S. producers. APHIS will collect information using VS Form 1–23 Appraisal & Indemnity Claim Form.

Need and Use of the Information: APHIS will collect the owner's name and address, the number of animals for which the owner is seeking payment, and the appraised value of each animal. The owner must also certify as to whether the animals are subject to a mortgage. If there is a mortgage, the form must be signed by the owner and each person holding a mortgage. Failure to collect this information would make it impossible for APHIS to launch its program to accelerate the eradication of chronic wasting disease from the United States.

Description of Respondents: Farms; Business or other for-profit.

Number of Respondents: 10.

Frequency of Responses: Reporting: On occasion.

Total Burden Hours: 10.

Sondra A. Blakey,

Departmental Information Collection Clearance Officer.

[FR Doc. 02–19945 Filed 8–6–02; 8:45 am]

BILLING CODE 3410–01–M

DEPARTMENT OF AGRICULTURE

Forest Service

Alpine County, CA, Resource Advisory Committee

AGENCY: Forest Service, USDA.

ACTION: Notice of meeting.

SUMMARY: The Alpine County Resource Advisory Committee (RAC) will meet on August 26, 2002, in Markleeville, California. The purpose of the meeting is to discuss issues relating to implementing the *Secure Rural Schools and Community Self-Determination Act of 2000* (Payments to States) and the expenditure of Title II funds benefiting National Forest System lands on the Humboldt-Toiyabe, and Stanislaus National Forests in Alpine County.

DATES: The meeting will be held August, 2002 at 6 p.m.

ADDRESSES: The meeting will be held at the Turtle Rock County Park, Markleeville, CA.

FOR FURTHER INFORMATION CONTACT: Laura Williams, Committee Coordinator, USDA, Humboldt-Toiyabe National Forest, 1536 S Carson St., Carson City, NV, 89701, (775) 884–8150, e-mail: *Ijwilliams@fs.fed.us.*

SUPPLEMENTARY INFORMATION: Agenda items to be covered include: (1) Old business; (2) Project criteria discussion; (3) Camping in Alpine County; (4) Project proposals; (5) New business & Public comment.

The meeting is open to the public. Public input opportunity will be provided and individuals will have the opportunity to address the Committee at that time.

Dated: July 29, 2002.

Gary Schiff,

Carson District Ranger.

[FR Doc. 02–19873 Filed 8–6–02; 8:45 am]

BILLING CODE 3410–11–M

DEPARTMENT OF AGRICULTURE

Forest Service

Notice of Resource Advisory Committee Meeting

AGENCY: Southwest Idaho Resource Advisory Committee, Boise, ID, USDA, Forest Service.

ACTION: Notice of meeting.

SUMMARY: Pursuant to the authorities in the Federal Advisory Committee Act (Public Law 92–463) and under the Source Rural Schools and Community Self-Determination Act of 2000 (Public Law 106–393) the Boise and Payette National Forests' Southwest Idaho Resource Advisory Committee will meet Wednesday, August 21, 2002 in Cascade, Idaho for a business meeting. The meeting is open to the public.

SUPPLEMENTARY INFORMATION: The business meeting on August 21, begins at 10:30 AM, at the American Legion Hall, Cascade, Idaho. Agenda topics will include review and approval of projects proposals, a forum with County Commissioners, development of project solicitation strategies for FY'03, and an open public forum.

FOR FURTHER INFORMATION CONTACT: Randy Swick, Designated Federal Officer, at (435) 865–3701.

Dated: July 31, 2002.

Mark J. Madrid,

Forest Supervisor, Payette National Forest.

[FR Doc. 02–19899 Filed 8–6–02; 8:45 am]

BILLING CODE 3410–11–M

DEPARTMENT OF AGRICULTURE

Forest Service

Extension of Certain Alaska Timber Sale Contracts; Finding of Substantial Public Interest

AGENCY: Forest Service, USDA.

ACTION: Notice

SUMMARY: There is substantial overriding public interest in extending

National Forest System timber sale contracts in Alaska for 3 years, subject to a maximum total contract length of 10 years. The extension applies to timber sale contracts awarded after January 1, 1997, which purchasers are diligently performing (not in default). To receive the extension, purchasers must request the extension in writing to the Contracting Officer and agree to release the Forest Service from damages for the replacement cost of timber if the contract is canceled in the future.

Contract extensions in Southeast Alaska will serve the public interest by advancing the Department's goal of economic stability through employment in Southeast Alaska in the wake of the closing of the region's two pulp mills. The intended effect is to minimize contract defaults, mill closures, and company bankruptcies.

DATES: The determination was made on July 30, 2002.

FOR FURTHER INFORMATION CONTACT: Rex Baumback, Forest and Rangelands Staff (202) 205–0855.

SUPPLEMENTARY INFORMATION: The Forest Service sells timber from National Forest System lands to individuals or companies. Each sale is formalized by execution of a contract between the purchaser and the Forest Service. The contract sets forth the explicit terms and provisions of the sale, including such matters as the estimated volume of timber to be removed, the period for removal, price to be paid to the Government, road construction and logging requirements, and environmental protection measures to be taken. The average contract period is approximately 2 years, although a few contracts have terms of 5 or more years.

The National Forest Management Act of 1976 (16 U.S.C. 472a(c)) provides that the Secretary of Agriculture shall not extend any timber sale contract period with an original term of 2 years or more, unless the purchaser has diligently performed in accordance with an approved plan of operations or the ''substantial overriding public interest'' justifies the extension. The authority to make this determination has been delegated to the Chief at 7 CFR 2.60.

The closure of the pulp mills operated by the Alaska Pulp Corporation (APC) and Ketchikan Pulp Company (KPC) in 1993 and 1997, respectively, has had a significant effect on the overall regional economy in Southeast Alaska. Wood consumption by these pulp mills and their associate sawmills accounted for about half of Alaska National Forest timber harvest since 1980. Employment in the wood products sector has declined significantly since the peak of 1990, decreasing by 2,500 jobs, or 72 percent, between 1990 and 2000. While this total includes the entire pulp mill labor force, which accounted for nearly 900 jobs in 1990, a larger absolute loss occurred in the logging sector with a loss of 1,433 jobs. A total of 993 people were employed in the wood products sector in 2000. Employment decreases tend to lag behind decreases in production. consequently, current wood products employment is projected to fall even lower since harvest has not rebounded. The unemployment rate in Alaska is 5 percent to 11 percent higher than the national average of 6 percent. Government indices indicate that the Western softwood lumber market has declined approximately 25 percent since mid-1999. Harvest from Tongass National Forest timber sales has steadily declined from 338 million board feet in 1990 to 147 million board feet in 2000. Although 2001 harvest level was only 48 million board feet, the lowest since industrial wood production started in the early 1950's this level was influenced not only by poor markets but also by court ordered injunctions that halted harvest for a portion of the year.

Rules at 36 CFR 223.52 permit contract extensions when Forest Service officials determine that adverse wood product market conditions have resulted in a drastic decline in wood product prices. Under market-related contract addition procedures, the Forest Service refers to the Western softwood lumber price index (PCU2421#4) to measure severe market declines in Western softwoods. The index has reflected the market decrease. Timber sale purchasers in Alaska, who have so requested, have received up to the maximum of 3 years of additional contract time authorized by 36 CFR 223.52. However, the market has not recovered, and companies in Alaska are still facing contract default, mill closure, and bankruptcy.

It has been determined that additional contract time will assist these purchasers by giving them more time in which the market may improve or in which they can mix their high-priced sales with lower priced sales. If bankruptcies, mill closures, and defaulted contracts are avoided, the United States and Southeast Alaska will benefit from more stable employment and market opportunities and increased competition for National Forest System timber sales. This action is consistent with Congress' direction to the Secretary in the Tongass Timber Reform Act of 1990 (16 U.S.C. 539d (note)) to provide for the multiple use and sustained yield of forest resources and to seek to provide a supply of timber from the Tongass National Forest which meets the annual market demand for timber from the Forest. This goal was also embodied in the February 21, 1997, settlement agreement reached between the Forest Service and the Ketchikan Pulp Company.

Accordingly, based on a study of alternatives and current rules at 36 CFR 223.115, it has been determined that there is substantial overriding public interest in extending sales in Alaska for up to 3 years, but not to exceed a total contract length of 10 years. To receive the extension, purchasers must request the extension in writing to the Contracting Officer and agree to release the Forest Service from damages for the replacement cost of timber if the contract is canceled in the future. The text of the finding is set out at the end of this notice.

Dated: July 30, 2002.

Sally D. Collins,

Associate Chief.

Determination of Substantial Overriding Public Interest for Extending Certain Timber Sale Contracts in Alaska

The Tongass Timber Reform Act (16 U.S.C. 539d (note)) directs the Secretary to provide for the multiple use and sustained yield of forest resources and to seek to provide a supply of timber from the Tongass National Forest which meets the annual market demand for timber from the Forest. Consistent with this direction the Forest Service seeks to maintain an economically viable timber sale program, which includes keeping volume under contract for future harvesting.

Periodically, lumber markets may experience severe declines in prices. Based on Bureau of Labor Statistics producer price indices, the lumber market for Western softwoods peaked in July 1999. Since then, price indices have declined approximately 25 to 30 percent. With the closings in 1993 and 1997 of the pulp mills operated by the Alaska Pulp Corporation and the Ketchikan Pulp Company, the economy of Southeast Alaska changed significantly. At the time of the mill closures, the Department committed itself to aiding the timber-dependent communities in Southeast Alaska by advancing the goal of economic stability through employment in the region. Currently, the unemployment rate in Alaska is 5 percent to 11 percent higher than the national average of 6 percent.

While most Forest Service timber sale contracts in Alaska contain provisions to extend termination dates during severely declining markets, many contracts have been extended for the

maximum amount of time permissable under 36 CFR 223.52. Nevertheless, the market has not improved significantly, and many companies in Alaska are still facing contract default, mill closure, and bankruptcy. A contract extension would assist these purchases by giving additional time in which the market may improve or in which they could mix their high-priced sales with lower-priced sales.

Having numerous, economically viable timber sale purchasers both maintains market opportunities and increases competition for National Forest System timber sales. These factors result in higher prices paid for such timber. Therefore, the Government benefits if defaulted timber sale contracts, mill closures, and bankruptcies can be avoided by granting contract extensions. In addition, the Government would avoid the difficult and expensive process of collecting default damages.

Therefore, pursuant to 16 U.S.C. 472a, 36 CFR 223.115, and the authority delegated to the Chief at 7 CFR 2.60 and from the Chief to the Associate Chief in Forest Service Manual Chapter 1230, I have determined that there is substantial overriding public interest in extending for 3 years National Forest System timber sales contracts in Alaska, subject to a maximum total contract length of 10 years. To receive the extension purchasers must make written request to the Contracting Officer and agree to release the Forest Service from damages for the replacement cost of timber if the contract is canceled in the future.

Dated: July 30, 2002.

Sally D. Collins,

Associate Chief.

[FR Doc. 02–19869 Filed 8–6–02; 8:45 am]

BILLING CODE 3410–11–M

DEPARTMENT OF COMMERCE

International Trade Administration

[A–570–853]

Bulk Aspirin from the People's Republic of China: Preliminary Results of Antidumping Duty Administrative Review and Changed Circumstances Review

AGENCY: Import Administration, International Trade Administration, Department of Commerce.

SUMMARY: The Department of Commerce is currently conducting an administrative review of the antidumping duty order on bulk aspirin from the People's Republic of China. The period of review is July 6, 2000, through June 30, 2001. This review covers imports of subject merchandise from two producer/exporters.

We preliminarily find that sales have not been made below normal value. If these preliminary results are adopted in our final results of review, we will instruct the Customs Service not to assess antidumping duties.

In addition, in response to a request from Jilin Pharmaceutical Import and Export Corporation, Jilin Pharmaceutical (U.S.A.) Inc., and Jilin Pharmaceutical Company Ltd., the Department of Commerce published a notice of initiation of changed circumstances review on June 7, 2002 (67 FR 39344). We preliminary find that Jilin Henghe Pharmaceutical is the successor-in-interest of Jilin Pharmaceutical Company Ltd. and Jilin Pharmaceutical Import and Export Corporation.

We invite interested parties to comment on these preliminary results. We will issue the final results no later than 120 days from the date of publication of this notice.

EFFECTIVE DATE: August 7, 2002.

FOR FURTHER INFORMATION CONTACT: Blanche Ziv or Cole Kyle, Import Administration, International Trade Administration, U.S. Department of Commerce, 14th Street and Constitution Avenue, N.W., Washington, D.C. 20230; telephone: (202) 482–4207, or (202) 482–1503, respectively.

SUPPLEMENTARY INFORMATION:

The Applicable Statute and Regulations

Unless otherwise indicated, all citations to the Tariff Act of 1930, as amended (''the Act''), are references to the provisions effective January 1, 1995, the effective date of the amendments made to the Act by the Uruguay Round Agreements Act (''URAA''). In addition, unless otherwise indicated, all citations to the Department of Commerce (''Department'') regulations are to 19 CFR Part 351 (April 2001).

Background

On July 11, 2000, the Department published an antidumping order on bulk aspirin from the People's Republic of China (''PRC''). *See Notice of Antidumping Duty Order: Bulk Aspirin from the People's Republic of China*, 65 FR 42673 (July 11, 2000). On July 2, 2001 , the Department published in the **Federal Register** an *Antidumping or Countervailing Duty Order, Finding, or Suspended Investigation; Opportunity to Request Administrative Review*, 66 FR 34910 (July 2, 2001).

On July 27 and 31, 2001, in accordance with 19 CFR 351.213(b), two manufacturers/exporters of the subject merchandise, Shandong Xinhua Pharmaceutical Co., Ltd. (''Shandong''), and Jilin Pharmaceutical Import and Export Company, Jilin Pharmaceutical (U.S.A.) Inc., and Jilin Pharmaceutical Limited Company (collectively, ''Jilin Pharmaceutical''), respectively, requested that the Department conduct an administrative review of this order. In addition, Jilin Pharmaceutical requested that, contemporaneous with the ongoing administrative review of the order, the Department review the company's name change and determine that Jilin Henghe Pharmaceutical (''Jilin Henghe'') is the successor-in-interest of Jilin Pharmaceutical.

On August 20, 2001, we published a notice of initiation of the administrative review. *See Initiation of Antidumping and Countervailing Duty Administrative Reviews and Requests for Revocations in Part*, 66 FR 43570 (August 20, 2001). The period of this review (''POR'') is July 6, 2000, through June 30, 2001.

We issued questionnaires to Jilin Pharmaceutical and Shandong on October 29, 2001. We received responses to the questionnaires from Shandong and Jilin Pharmaceutical on December 5 and 27, 2001, respectively.

On December 21, 2001, the Department invited interested parties to comment on surrogate country selection and to provide publicly available information for valuing the factors of production. We received responses from Rhodia, Inc., (''the petitioner'') and Jilin Pharmaceutical on January 22, 2002. Shandong provided surrogate value information to the Department on July 8, 2002.

On March 29, 2002, the Department found that it was not practicable to complete the review in the time allotted and published an extension of time limit for the completion of the preliminary results of this review to no later than July 31, 2002, in accordance with section 751(a)(3)(A) of the Act. *See Bulk Aspirin from the People's Republic of China; Extension of Time Limit for the Preliminary Results of the Antidumping Duty Administrative Review*, 67 FR 15177 (March 29, 2002).

We issued supplemental questionnaires to Jilin Pharmaceutical and Shandong on April 22 and 24, 2002, respectively. We received responses to the supplemental questionnaires from Jilin Pharmaceutical and Shandong on May 24 and 29, 2002, respectively.

On, June 3, 2002, we initiated a changed circumstances review to be conducted contemporaneously with the ongoing administrative review of the order. *See Bulk Aspirin From the People's Republic of China; Initiation of*

Changed Circumstances Antidumping Duty Administrative Review, 67 FR 39344 (June 7, 2002). On June 5, 2002, we issued a supplemental questionnaire to Jilin Pharmaceutical regarding the changed circumstances review. We received a response to the supplemental questionnaire from Jilin Pharmaceutical on June 28, 2002. *See* ''*Changed Circumstances*'' section, below.

Scope of the Order

The product covered by this review is bulk acetylsalicylic acid, commonly referred to as bulk aspirin, whether or not in pharmaceutical or compound form, not put up in dosage form (tablet, capsule, powders or similar form for direct human consumption). Bulk aspirin may be imported in two forms, as pure ortho-acetylsalicylic acid or as mixed ortho-acetylsalicylic acid. Pure ortho-acetylsalicylic acid can be either in crystal form or granulated into a fine powder (pharmaceutical form). This product has the chemical formula C9H8O4. It is defined by the official monograph of the United States Pharmacopoeia 23 (''USP''). It is currently classifiable under the Harmonized Tariff Schedule of the United States (''HTSUS'') subheading 2918.22.1000.

Mixed ortho-acetylsalicylic acid consists of ortho-acetylsalicylic acid combined with other inactive substances such as starch, lactose, cellulose, or coloring materials and/or other active substances. The presence of other active substances must be in concentrations less than that specified for particular nonprescription drug combinations of aspirin and active substances as published in the *Handbook of Nonprescription Drugs*, eighth edition, American Pharmaceutical Association. This product is currently classifiable under HTSUS subheading 3003.90.0000.

Although the HTSUS subheadings are provided for convenience and customs purposes, the written description of the merchandise under review is dispositive.

Separate Rates

It is the Department's standard policy to assign all exporters of the merchandise subject to review in nonmarket economy (''NME'') countries a single rate unless an exporter can demonstrate an absence of government control, both in law and in fact, with respect to exports. To establish whether an exporter is sufficiently independent of government control to be entitled to a separate rate, the Department analyzes the exporter in light of the criteria established in the *Final Determination of Sales at Less Than Fair Value: Sparklers from the People's Republic of China*, 56 FR 20588 (May 6, 1991) (''*Sparklers*''), as amplified in the *Final Determination of Sales at Less Than Fair Value: Silicon Carbide from the People's Republic of China*, 59 FR 22585 (May 2, 1994) (''*Silicon Carbide*'').

Absence of De Jure Control

Evidence supporting, though not requiring, a finding of *de jure* absence of government control over export activities includes: (1) An absence of restrictive stipulations associated with an individual exporter's business and export licenses; (2) Any legislative enactments decentralizing control of companies; and (3) Any other formal measures by the government decentralizing control of companies. *See Sparklers*, 56 FR at 20589.

Absence of De Facto Control

A *de facto* analysis of absence of government control over exports is based on four factors -- whether the respondent: 1) sets its own export prices independently of the government and other exporters; 2) retains the proceeds from its export sales and makes independent decisions regarding the disposition of profits or financing of losses; 3) has the authority to negotiate and sign contracts and other agreements; and 4) has autonomy from the government regarding the selection of management. *See Silicon Carbide*, 59 FR at 22587; *see also Sparklers*, 56 FR at 20589.

In the *Notice of Final Determination of Sales at Less Than Fair Value: Bulk Aspirin from the People's Republic of China* 65 FR 33805 (May 25, 2000) (''*LTFV Investigation*''), we determined that there was *de jure* and *de facto* absence of government control of each investigated company's export activities and determined that each company warranted a company-specific dumping margin. For the POR, Jilin Pharmaceutical and Shandong (collectively, ''the respondents''), responded to the Department's request for information regarding separate rates. We have found that the evidence on the record is consistent with the final determination in the *LTFV Investigation* and the respondents continue to demonstrate an absence of government control, both in law and in fact, with respect to their exports, in accordance with the criteria identified in *Sparklers* and *Silicon Carbide*.

Changed Circumstances

Jilin Pharmaceutical has requested that the Department conduct a changed circumstances review to determine that Jilin Henghe is the successor-in-interest of Jilin Pharmaceutical. In making successor-in-interest determinations, the Department examines several factors including, but not limited to, changes in: (1) Management; (2) production facilities; (3) supplier relationships; and (4) customer base. *See, e.g., Brass Sheet and Strip from Canada; Final Results of Antidumping Duty Administrative Review*, 57 FR 20460, 20461 (May 13, 1992). While no single factor, or combination of factors, will necessarily prove dispositive, the Department will generally consider the new company to be the successor to its predecessor company if the resulting operations are essentially the same as those of the predecessor company. *See, e.g., id.* and *Industrial Phosphoric Acid from Israel; Final Results of Changed Circumstances Review*, 59 FR 6944, 6945 (February 14, 1994). Thus, if the evidence demonstrates that, with respect to the production and sale of the subject merchandise, the new company operates as the same business entity as its predecessor, the Department will assign the new company the cash-deposit rate of its predecessor.

Based on the information submitted by Jilin Pharmaceutical during the initiation stages of this changed circumstances review and the supplemental information submitted on June 28, 2002, we preliminarily determine that Jilin Henghe Pharmaceutical Company (''Jilin Henghe'') is the successor-in-interest to Jilin Pharmaceutical. We find that the company's organizational structure, senior management, production facilities, supplier relationships, and customers have remained essentially unchanged. Furthermore, Jilin Pharmaceutical has provided sufficient documentation of its name change (*see* Jilin Pharmaceutical's June 28, 2002, supplemental response). Based on all the evidence reviewed, we find that Jilin Henghe operates as the same business entity as Jilin Pharmaceutical. Thus, we preliminarily determine that Jilin Henghe should receive the same antidumping duty cash-deposit rate with respect to the subject merchandise as Jilin Pharmaceutical, its predecessor company.

Export Price and Constructed Export Price

For certain sales made by the respondents to the United States, we used constructed export price (''CEP'') in accordance with section 772(b) of the Act because the first sale to an unaffiliated purchaser occurred after importation of the merchandise into the United States. For other sales made by

the respondents, we used export price (''EP''), in accordance with section 772(a) of the Act, because the subject merchandise was sold outside the United States to unaffiliated purchasers in the United States prior to importation into the United States.

We calculated EP based on the CIF, C&F, and FOB prices to unaffiliated purchasers, as appropriate. In accordance with section 772(c) of the Act, we deducted from these prices, where appropriate, amounts for foreign inland freight, foreign brokerage and handling, international freight, and marine insurance. We valued the deductions for foreign inland freight, foreign brokerage and handling, and marine insurance using surrogate data based on Indian freight costs. (We selected India as the surrogate country for the reasons explained in the ''*Normal Value*'' section of this notice, below.) Where all of a respondent's marine insurance and ocean freight were provided by PRC-owned companies, we valued the deductions using surrogate value data. However, where a respondent's marine insurance or ocean freight was provided by a market economy company and paid for in a market economy currency, we used the reported market economy marine insurance or ocean freight amount to value these expenses for all U.S. sales made by that respondent. *See* 19 CFR 351.408(c)(1).

We calculated CEP based on FOB and delivered prices from the respondents' U.S. subsidiaries to unaffiliated customers. In accordance with section 772(c) of the Act, we deducted from the CEP starting price foreign inland freight, international freight, marine insurance, U.S. inland freight, U.S. customs duties, and U.S. warehousing expenses. In accordance with section 772(d)(1) of the Act, we made deductions for the following selling expenses that related to economic activity in the United States: credit expenses, indirect selling expenses, inventory carrying costs, and direct selling expenses. For certain sales made by Jilin Pharmaceutical, we have used the signature date of the preliminary results (*i.e.*, July 31, 2002) in the calculation of imputed credit expenses (see the memorandum from the Team to the file (''Preliminary Results Calculation Memorandum for Jilin Henghe Pharmaceutical Co., Ltd.''), dated July 31, 2002). In accordance with section 772(d)(3) of the Act, we deducted from the starting price an amount for profit.

International Freight: Where the respondent used a market-economy shipper for a significant portion of its sales and paid for the shipping in a market-economy currency, we used the average price paid by that producer/exporter to value international freight for all of its sales. See Tapered Roller Bearings from the People's Republic of China; Notice of Preliminary Results of 2000–2001 Review, Partial Rescission of Review, and Notice of Intent to Revoke Order, in Part, 67 FR 45451 (July 9, 2002).

Marine Insurance: Where the respondent used a market-economy marine insurance provider for its sales and paid for the insurance in a market-economy currency, we used the average price for marine insurance paid by that producer/exporter for all of its sales. Where the respondent did not use a market-economy insurance provider, we used a June 1998 price quote from a U.S. insurance provider, as we have in past PRC cases. *See Tapered Roller Bearings and Parts Thereof, Finished and Unfinished, From the People's Republic of China; Preliminary Results of 1996–97 Antidumping Duty Administrative Review and New Shipper Review and Determination Not To Revoke Order in Part*, 63 FR 63842 (November 17, 1998).

Brokerage and Handling: To value brokerage and handling, we used the public version of a U.S. sales listing reported in the questionnaire response submitted by Meltroll Engineering for *Stainless Steel Bar from India; Final Results of Antidumping Duty Administrative Review and New Shipper Review and Partial Rescission of Administrative Review*, 65 FR 48965 (August 10, 2000). Because this information is not contemporaneous with the POR, we adjusted the data to the POR by using the Indian wholesale price index.

Normal Value

Section 773(c)(1) of the Act provides that the Department shall determine the normal value (''NV'') using a factors-of-production methodology if: (1) The merchandise is exported from an NME country; and (2) the information does not permit the calculation of NV using home-market prices, third-country prices, or constructed value (''CV'') under section 773(a) of the Act.

The Department has treated the PRC as an NME country in all previous antidumping cases. Furthermore, available information does not permit the calculation of NV using home market prices, third country prices, or CV under section 773(a) of the Act. In accordance with section 771(18)(C)(i) of the Act, any determination that a foreign country is an NME country shall remain in effect until revoked by the administering authority. The party in this proceeding has not contested such treatment in this review. Therefore, we treated the PRC as an NME country for purposes of this review and calculated NV by valuing the factors of production in a surrogate country.

Section 773(c)(4) of the Act requires the Department to value the NME producer's factors of production, to the extent possible, in one or more market economy countries that: (1) are at a level of economic development comparable to that of the NME, and (2) are significant producers of comparable merchandise. The Department has determined that India, Pakistan, Indonesia, Sri Lanka, and the Philippines are countries comparable to the PRC in terms of overall economic development. For a further discussion of our surrogate selection, see the December 18, 2001, Memorandum to Susan Kuhbach from Jeff May ''1st Administrative Review of Bulk Aspirin from the People's Republic of China,'' (''Surrogate Country Memo''), which is on file in the Department's Central Records Unit in Room B–099 of the main Department building. According to the available information on the record, we determined that India is a significant producer of comparable merchandise. None of the interested parties contested the selection of India as the surrogate country. Accordingly, we calculated NV using Indian values for the PRC producers' factors of production. We obtained and relied upon publicly available information wherever possible. In many instances, we used the *Monthly Statistics of the Foreign Trade of India; Volume II Imports* (''MSFTI'') to value factors of production, energy inputs and packing materials. Consistent with the *Final Determination of Sales at Less than Fair Value: Certain Automotive Replacement Glass Windshields From the People's Republic of China*, 67 FR 6482 (February 12, 2002) and accompanying *Issues and Decision Memorandum*, we excluded Indian import data reported in the MSFTI for Korea, Thailand and Indonesia in our surrogate value calculations. In addition to the MSFTI data, we used information from *Indian Chemical Weekly* (''ICW'') to value certain chemical inputs.

Factors of Production

In accordance with section 773(c) of the Act, we calculated NV based on factors of production reported by the respondents. To calculate NV, the reported unit factor quantities were multiplied by publicly available Indian surrogate values.

In selecting the surrogate values, we considered the quality, specificity, and contemporaneity of the data. As appropriate, we adjusted input prices to

make them delivered prices. For the distances reported, we added to Indian CIF surrogate values a surrogate freight cost using the reported distances from the PRC port to the PRC factory, or from the domestic supplier to the factory. This adjustment is in accordance with the United States Court of Appeals for the Federal Circuit's decision in *Sigma Corp.* v. *United States*, 117 F. 3d 1401, 1807–1908 (Fed.Cir. 1997). For those values not contemporaneous with the POR, we adjusted for inflation using the appropriate wholesale or producer price index published in the International Monetary Fund's *International Financial Statistics*.

Many of the inputs in the production of bulk aspirin are considered business proprietary information by the respondents. Due to the proprietary nature of this data, we are unable to discuss many of the inputs in this preliminary results notice. For a complete analysis of surrogate values, see the memorandum from the Team to the file (''Factors of Production Valuation Memorandum''), dated July 31, 2002.

Labor: We valued labor using the method described in 19 CFR 351.408(c)(3).

Electricity, Coal and Oil: Consistent with our approach in *Manganese Metal from the People's Republic of China; Final Results of Antidumping Duty Administrative Review*, 66 FR 15076 (March 15, 2001), we calculated our surrogate value for electricity based on electricity rate data reported by the International Energy Agency (''IEA''), 4th quarter 2000. For coal, we used import values from the MSFTI. We based the value of fuel oil on prices reported by the IEA, 4th quarter 2000.

Factory Overhead, SG&A, and Profit: We based our calculation of factory overhead, SG&A, and profit on a simple average derived from the financial data of three Indian companies of comparable merchandise: Andhra Sugars Ltd. (''Andhra''), Alta Laboratories Ltd. (''Alta''), and Gujarat Organics Ltd. (''Gujarat''). Our calculations and application of overhead, SG&A and profit ratios are consistent with the Department's practice. *See, e.g., Certain Preserved Mushrooms from the People's Republic of China*, 65 FR 66703, 66707 (November 7, 2000); *Certain Cut-to-Length Carbon Steel Late from the People's Republic of China*, 62 FR 61964, 61970 (November 20, 1997); *Notice of Final Determination of Sales at Less Than Fair Value: Bicycles from the People's Republic of China*, 61 FR 19026, 19039 (April 30, 1996).

Packing Materials: For packing materials we used import values from the MSFTI.

Inland Freight Rates: To value truck freight rates, we used a 2000 rate quote from an Indian trucking company. For rail freight, we based our calculation on 1999 price quotes from Indian rail freight transporters.

Preliminary Results of the Review

We preliminary find that the following dumping margins exist for the period July 6, 2000, through June 30, 2001:

Exporter/Manufacturer	Weighted-average margin percentage
Shandong Xinhua Pharmaceutical Co., Ltd.	0.00
Jilin Pharmaceutical	0.04 (*de minimis*)

Any interested party may request a hearing within 30 days of publication of this notice. *See* 19 CFR 351.310(c). Any hearing, if requested, will be held approximately 44 days after the date of publication of this notice, or the first working day thereafter. Interested parties may submit case briefs and/or written comments no later than 30 days after the date of publication of this notice. Rebuttal briefs and rebuttals to written comments, which must be limited to issues raised in such briefs or comments, may be filed not later than 37 days after the date of publication. Parties who submit arguments are requested to submit with the argument (1) a statement of the issue, (2) a brief summary of the argument, and (3) a table of authorities.

The Department will issue a notice of final results of this administrative review, including the results of its analysis of issues raised in any such written comments, within 120 days of publication of these preliminary results.

Assessment Rates and Cash Deposit Requirements

Pursuant to 19 CFR 351.212(b), the Department calculates an assessment rate for each importer of the subject merchandise. Upon issuance of the final results of this administrative review, if any importer-specific assessment rates calculated in the final results are above *de minimis* (*i.e.*, at or above 0.5 percent), the Department will issue appraisement instructions directly to the Customs Service to assess antidumping duties on appropriate entries by applying the assessment rate to the entered value of the merchandise. For assessment purposes, we calculate importer-specific assessment rates for the subject merchandise by aggregating the dumping duties due for all U.S. sales to each importer and dividing the amount by the total entered value of the sales to that importer.

The following cash deposit requirements will be effective upon publication of the final results of this administrative review for all shipments of bulk aspirin entered, or withdrawn from warehouse, for consumption on or after the publication date of the final results of this administrative review, as provided for by section 751(a)(1) of the Act: (1) For the PRC companies named above, which have separate rates, no antidumping duty deposits will be required; (2) for previously-reviewed PRC and non-PRC exporters with separate rates, the cash deposit rate will be the company-specific rate established for the most recent period during which they were reviewed; (3) for all other PRC exporters, the rate will be the PRC country-wide rate, which is 144.02 percent; and (4) for all other non-PRC exporters of subject merchandise from the PRC, the cash deposit rate will be the rate applicable to the PRC supplier of that exporter. These deposit requirements, when imposed, shall remain in effect until publication of the final results of the next administrative review.

Notification to Importers

This notice also serves as a preliminary reminder to importers of their responsibility under 19 CFR 351.402(f) to file a certificate regarding the reimbursement of antidumping duties prior to liquidation of the relevant entries during this review period. Failure to comply with this requirement could result in the Secretary's presumption that reimbursement of antidumping duties occurred and the subsequent assessment of double antidumping duties.

We are issuing and publishing these results in accordance with sections 751(a)(1) and 777(i)(1) of the Act.

Dated: July 31, 2002.

Faryar Shirzad,

Assistant Secretary for Import Administration.

[FR Doc. 02–19989 Filed 8–6–02; 8:45 am]

BILLING CODE 3510–DS–S

DEPARTMENT OF COMMERCE

International Trade Administration

[A–549–813]

Notice of Preliminary Results, Partial Rescission of Antidumping Duty Administrative Review and Preliminary Determination to Revoke Order in Part: Canned Pineapple Fruit From Thailand

AGENCY: Import Administration, International Trade Administration, U.S. Department of Commerce.

SUMMARY: In response to requests by producers/exporters of subject merchandise and by the petitioners, the Department of Commerce (the Department) is conducting an administrative review of the antidumping duty order on canned pineapple fruit (CPF) from Thailand. This review covers nine producers/exporters of the subject merchandise. The period of review (POR) is July 1, 2000, through June 30, 2001.

We preliminarily determine that for certain producers/exporters sales have been made below normal value (NV). If these preliminary results are adopted in our final results, we will instruct the U.S. Customs Service to assess antidumping duties based on the difference between the export price (EP) or the constructed export price (CEP), as applicable, and the NV.

Furthermore, if the preliminary results for one exporter/producer, Siam Food Products Public Co. Ltd. (SFP) are adopted in our final results of this administrative review, we intend to revoke the antidumping duty order with respect to SFP, based on three consecutive review periods of sales at not less than normal value. *See Intent to Revoke* section of this notice.

EFFECTIVE DATE: August 7, 2002.

FOR FURTHER INFORMATION CONTACT: David Layton or Charles Riggle, at (202) 482-0371 or (202) 482–0650, respectively; AD/CVD Enforcement Office 5, Group II, Import Administration, International Trade Administration, U.S. Department of Commerce, 14th Street and Constitution Avenue, NW, Washington, DC 20230.

SUPPLEMENTARY INFORMATION:

Applicable Statute and Regulations

Unless otherwise indicated, all citations to the statute are references to the provisions effective January 1, 1995, the effective date of the amendments made to the Tariff Act of 1930 (the Act) by the Uruguay Round Agreements Act (URAA). In addition, unless otherwise indicated, all citations to the Department's regulations are to 19 CFR part 351 (2002).

Case History

On July 18, 1995, the Department issued an antidumping duty order on CPF from Thailand. *See Notice of Antidumping Duty Order and Amended Final Determination: Canned Pineapple Fruit From Thailand,* 60 FR 36775 (July 18, 1995). On July 24, 2001, we published in the **Federal Register** the notice of opportunity to request the sixth administrative review of this order. *See Antidumping or Countervailing Duty Order, Finding, or Suspended Investigation; Opportunity to Request Administrative Review,* 66 FR 34910 (July 2, 2001); and *Antidumping or Countervailing Duty Order, Finding, or Suspended Investigation; Opportunity to Request Administrative Review; Correction,* 66 FR 38455 (July 24, 2001).

In accordance with 19 CFR 351.213(b)(2), the following producers/exporters made timely requests that the Department conduct an administrative review for the period from July 1, 2000, through June 30, 2001: Vita Food Factory (1989) Co., Ltd. (Vita); Kuiburi Fruit Canning Company Limited (Kuiburi); Malee Sampran Public Co., Ltd. (Malee); SFP; The Thai Pineapple Public Co., Ltd. (TIPCO); and Dole Food Company, Inc., Dole Packaged Foods Company, and Dole Thailand, Ltd (collectively, Dole).

In addition, on July 31, 2001, the petitioners, Maui Pineapple Company and the International Longshoremen's and Warehousemen's Union, in accordance with 19 CFR 351.213(b)(1), submitted a timely request that the Department conduct a review of Malee, Prachuab Fruit Canning Company (Praft), Siam Fruit Canning (1988) Co., Ltd. (SIFCO), the Thai Pineapple Canning Industry Corp., Ltd. (TPC), SFP, TIPCO, Vita, and Dole.

On August 20, 2001, we published the notice of initiation of this antidumping duty administrative review, covering the period July 1, 2000, through June 30, 2001. *See Initiation of Antidumping and Countervailing Duty Administrative Reviews and Requests for Revocation in Part,* 66 FR 43570 (August 20, 2001).

On September 17, 2001, in response to the Department's questionnaire, Praft stated that it made no shipments to the United States of the subject merchandise during the POR. The Department independently confirmed with the U.S. Customs Service that there were no shipments from Praft during the POR. *See* Memorandum to File from David Layton, November 5, 2001. Therefore, in accordance with section 351.213(d)(3) of the Department's regulations, and consistent with our practice, we are treating Praft as a non-shipper for purposes of this review and are preliminarily rescinding this review with respect to Praft.

Scope of the Review

The product covered by this review is CPF, defined as pineapple processed and/or prepared into various product forms, including rings, pieces, chunks, tidbits, and crushed pineapple, that is packed and cooked in metal cans with either pineapple juice or sugar syrup added. CPF is currently classifiable under subheadings 2008.20.0010 and 2008.20.0090 of the Harmonized Tariff Schedule of the United States (HTSUS). HTSUS 2008.20.0010 covers CPF packed in a sugar-based syrup; HTSUS 2008.20.0090 covers CPF packed without added sugar (*i.e.,* juice-packed). Although these HTSUS subheadings are provided for convenience and for customs purposes, the written description of the scope is dispositive.

Verification

As provided in sections 782(i)(2) and (3) of the Act, we verified information provided by SFP, Vita and Kuiburi. We used standard verification procedures, including on-site inspection of the respondent producers' facilities and examination of relevant sales and financial records.

Fair Value Comparisons

We compared the EP or the CEP, as applicable, to the NV, as described in the *Export Price and Constructed Export Price* and *Normal Value* sections of this notice. We first attempted to compare contemporaneous sales in the U.S. and comparison markets of products that were identical with respect to the following characteristics: weight, form, variety, and grade. Where we were unable to compare sales of identical merchandise, we compared U.S. products with the most similar merchandise sold in the comparison market based on the characteristics listed above, in that order of priority. Where there were no appropriate comparison market sales of comparable merchandise, we compared the merchandise sold in the United States to constructed value (CV), in accordance with section 773(a)(4) of the Act. For all respondents, we based the date of sale on the date of the invoice.

Export Price and Constructed Export Price

For the price to the United States, we used, as appropriate, EP or CEP as defined in sections 772(a) and 772(b) of

the Act, respectively. Section 772(a) of the Act defines EP as the price at which the subject merchandise is first sold (or agreed be sold) before the date of importation by the producer or exporter of the subject merchandise outside the United States to an unaffiliated purchaser in the United States or to an unaffiliated purchaser for exportation to the United States. Section 772(b) of the Act defines CEP as the price at which the subject merchandise is first sold inside the United States before or after the date of importation, by or for the account of the producer or exporter of the merchandise, or by a seller affiliated with the producer or exporter, to an unaffiliated purchaser, as adjusted under subsections 772(c) and (d) of the Act.

For all respondents, we calculated EP and CEP, as appropriate, based on the packed prices charged to the first unaffiliated customer in the United States.

In accordance with section 772(c)(2) of the Act, we calculated the EP and CEP by deducting movement expenses and export taxes and duties from the starting price, where appropriate. Section 772(d)(1) of the Act provides for additional adjustments to CEP. Accordingly, for CEP sales we also reduced the starting price by direct and indirect selling expenses incurred in the United States and an amount for profit.

We determined the EP or CEP for each company as follows:

TIPCO

For TIPCO's U.S. sales, the merchandise was sold either directly by TIPCO or indirectly through its U.S. affiliate, TIPCO Marketing Co. (TMC), to the first unaffiliated purchaser in the United States prior to importation. We calculated an EP for all of TIPCO's sales because CEP was not otherwise warranted based on the facts of record. Although TMC is a company legally incorporated in the United States, the company does not have either business premises or employees in the United States. TIPCO employees based in Bangkok conduct all of TMC's activities out of TIPCO's Bangkok headquarters, including invoicing, paperwork processing, receipt of payment, and arranging for customs and brokerage. Accordingly, as the merchandise was sold before importation by TMC outside the United States, we have determined these sales to be EP transactions. *See Circular Welded Non-Alloy Steel Pipe from Mexico: Final Results of Antidumping Duty Administrative Review,* 65 FR 37518 (June 15, 2000) and accompanying *Decision Memorandum* at Hylsa Comment 3.

We calculated EP based on the packed FOB or CIF price to unaffiliated purchasers for exportation to the United States. In accordance with section 772(c)(2)(A) of the Act, we made deductions from the starting price for foreign movement expenses (including brokerage and handling, port charges, stuffing expenses, and inland freight), international freight, U.S. customs duties, and U.S. brokerage and handling. *See* Analysis Memorandum for The Thai Pineapple Public Co., Ltd. dated July 31, 2002 (TIPCO Analysis Memorandum).

SFP

We calculated an EP for all of SFP's sales because the merchandise was sold directly by SFP outside the United States to the first unaffiliated purchaser in the United States prior to importation, and CEP was not otherwise indicated. SFP has one employee in the United States; however, this employee does not: (1) Take title to the subject merchandise; (2) issue invoices or receive payments; or (3) arrange for other aspects of the transaction. The merchandise was shipped directly by SFP in Bangkok to the unaffiliated customer in the United States. The information on the record indicates that SFP's Bangkok office is responsible for confirming orders and for issuing the invoice directly to the customer. Payment also is sent directly from the unaffiliated U.S. customer to SFP in Bangkok. Therefore, the Department has determined that these sales were made in Bangkok prior to importation and, thus, are properly classified as EP transactions.

We calculated EP based on the packed FOB price to unaffiliated purchasers for exportation to the United States. We made deductions for foreign movement expenses in accordance with section 772(c)(2)(A) of the Act. *See* Analysis Memorandum for Siam Food Products Public Co. Ltd., dated July 31, 2002 (SFP Analysis Memorandum).

Vita

We calculated an EP for all of Vita's sales because the merchandise was sold directly by Vita outside the United States to the first unaffiliated purchaser in the United States prior to importation, and CEP was not otherwise indicated. We calculated EP based on the packed FOB price to unaffiliated purchasers for exportation to the United States. In accordance with section 772(c)(2)(A) of the Act, we made deductions from the starting price for foreign movement expenses (including brokerage and handling, terminal handling charge, bill of lading fee, customs clearance (shipping) charge, port charges, document fee, stuffing expenses, inland freight and other miscellaneous charges). *See* Analysis Memorandum for Vita Food Factory (1989) Co., Ltd., dated July 31, 2002 (Vita Analysis Memorandum).

Kuiburi

We calculated an EP for all of Kuiburi's sales because the merchandise was sold directly by Kuiburi outside the United States to the first unaffiliated purchaser in the United States prior to importation, and CEP was not otherwise indicated. We calculated EP based on the packed, FOB or C&F price to unaffiliated purchasers for exportation to the United States. In accordance with section 772(c)(2)(A) of the Act, we made deductions from the starting price for foreign movement expenses and international freight. *See* Analysis Memorandum for Kuiburi Fruit Canning Company Limited, dated July 31, 2002 (Kuiburi Analysis Memorandum).

SIFCO

We calculated an EP for all of SIFCO's sales because the merchandise was sold directly by SIFCO outside the United States to the first unaffiliated purchaser in the United States prior to importation, and CEP was not otherwise indicated. We calculated EP based on the packed, FOB or C&F price to unaffiliated purchasers for exportation to the United States. In accordance with section 772(c)(2)(A) of the Act, we made deductions from the starting price for foreign movement expenses including inland freight (which consisted of handling charges, port/gate charges, stuffing charges, document charges, and truck costs), international freight, and U.S. brokerage and handling. *See* Analysis Memorandum for Siam Fruit Canning (1988) Co., Ltd., dated July 31, 2002 (SIFCO Analysis Memorandum).

SIFCO reported its sales contract date as the date of sale in its sales data base. However, in its responses to Section A and to the Department's supplemental questionnaire it indicated that certain terms of sale can and do change up to the invoice date. It also indicated that if the terms of sale are changed for a given transaction, the original sales contract is cancelled and a new contract is created. Since SIFCO can and did change the terms of sale after the original contract date, we have determined that invoice date is the proper date of sale.

TPC

During the POR, TPC had both EP and CEP transactions. We calculated an EP for sales where the merchandise was sold directly by TPC outside the United

States to the first unaffiliated purchaser in the United States prior to importation. We calculated a CEP for sales made by TPC's affiliated U.S. reseller, Mitsubishi International Corporation (MIC), after importation of the subject merchandise into the United States during the first 10 months of the POR. For the remainder of the POR, we calculated CEP for sales of MIC's products by Chicken of the Sea International (COSI) in the United States. EP and CEP were based on the packed, FOB, C&F, or delivered price to unaffiliated purchasers in the United States. We made deductions for discounts and rebates, including early payment discounts, promotional allowances, freight allowances, and billback discounts and rebates. We also made deductions for movement expenses in accordance with section 772(c)(2)(A) of the Act. These include inland freight from plant to port of exportation, foreign brokerage and handling, other miscellaneous foreign port charges, international freight, marine insurance, U.S. customs brokerage, U.S. customs duty, harbor maintenance fees, merchandise processing fee, and U.S. inland freight expenses (freight from port to warehouse and freight from warehouse to the customer).

In accordance with section 772(d)(1) of the Act, for CEP sales, we deducted from the starting price those selling expenses that were incurred in selling the subject merchandise in the United States, including commissions, direct selling expenses (credit costs, warranty expenses), and indirect selling expenses incurred by MIC and COSI in the United States. We also deducted from the starting price an amount for profit in accordance with section 772(d)(3) of the Act. *See* Analysis Memorandum for the Thai Pineapple Canning Industry, dated July 31, 2002 (TPC Analysis Memorandum).

Malee

For this POR, the Department found that all of Malee's U.S. sales were properly classified as CEP transactions because these sales were made in the United States by Malee's affiliated trading company, Icon Foods.

CEP was based on the packed C.I.F. ex-dock U.S. port price to unaffiliated purchasers in the United States. We made deductions for foreign inland movement expenses, insurance and international freight in accordance with section 772(c)(2)(A) of the Act. These include inland freight from plant to port of exportation, foreign brokerage and handling, other miscellaneous foreign port charges, international freight, marine insurance, U.S. customs brokerage, U.S. customs duty, harbor maintenance fees and merchandise processing fees. Because all of Malee's sales were CEP, in accordance with section 772(d)(1) of the Act, we deducted from the starting price those selling expenses associated with selling the subject merchandise in the United States, including direct selling expenses and indirect selling expenses incurred by Icon Foods in the United States. We also deducted from the starting price an amount for profit in accordance with section 772(d)(3) of the Act. *See* Analysis Memorandum for Malee Sampran Public Co., Ltd., dated July 31, 2002 (Malee Analysis Memorandum).

Dole

For this POR, the Department found that all of Dole's U.S. sales were properly classified as CEP transactions because these sales were made in the United States by Dole Packaged Foods (DPF), a division of Dole.

CEP was based on DPF's price to unaffiliated purchasers in the United States. We made deductions from the starting price for discounts in accordance with 19 CFR 351.401(c). We also made deductions for foreign inland movement expenses, insurance and international freight in accordance with section 772(c)(2)(A) of the Act. Because all of Dole's sales were CEP, in accordance with section 772(d)(1) of the Act, we deducted from the starting price those selling expenses associated with selling the subject merchandise in the United States, including direct and indirect selling expenses incurred by DPF in the United States. We also deducted from the starting price an amount for profit in accordance with section 772(d)(3) of the Act.

Normal Value

A. Selection of Comparison Markets

Based on a comparison of the aggregate quantity of home market sales and U.S. sales, we determined that, with the exception of Malee and Vita, the quantity of foreign like product each respondent sold in Thailand did not permit a proper comparison with the sales of the subject merchandise to the United States because the quantity of each company's sales in its home market was less than 5 percent of the quantity of its sales to the U.S. market. *See* section 773(a)(1) of the Act. Therefore, for all respondents except Malee and Vita, in accordance with section 773(a)(1)(B)(ii) of the Act, we based NV on the price at which the foreign like product was first sold for consumption in each respondent's largest viable third-country market, *i.e.,* France for SIFCO, the United Kingdom for SFP, Canada for Dole, Spain for Kuiburi and Germany for TPC and TIPCO. With respect to Malee and Vita, we based NV on the price at which the foreign like product was first sold for consumption in the home market.

B. Cost of Production Analysis

Pursuant to section 773(b)(1) of the Act, we initiated a cost of production (COP) investigation of comparison markets for each respondent. Because we disregarded sales that failed the cost test in the last completed review of TIPCO, SFP, TPC, Malee, Kuiburi, SIFCO, and Vita, and in the investigation (i.e., the last completed segment in which Dole participated) for Dole, we had reasonable grounds to believe or suspect that sales by these companies of the foreign like product under consideration for the determination of NV in this review were made at prices below the COP, as provided by section 773(b)(2)(A)(ii) of the Act.[1] We conducted the COP analysis as described below.

1. Calculation of COP/Fruit Cost Allocation

In accordance with section 773(b)(3) of the Act, for each respondent, we calculated the weighted-average COP, by model, based on the sum of the costs of materials, fabrication, selling, general and administrative expenses (SG&A), and packing costs. We relied on the submitted COPs except in the specific instances noted below, where the submitted costs were not appropriately quantified or valued.

The Department's long-standing practice, now codified at section 773(f)(1)(A) of the Act, is to rely on a company's normal books and records if such records are in accordance with home country generally accepted accounting principles (GAAP) and reasonably reflect the costs associated with production of the merchandise. In addition, as the statute indicates, the

[1] The 1999/2000 review was not completed until three months after the current review was initiated. Therefore, at the time the questionnaires were issued, we initiated the COP investigations based on the results of the completed 1998/1999 review and, in the case of Dole, based on our final determination in the investigation. *See Notice of Final Results of Antidumping Duty Administrative Review and Final Determination not to Revoke Order in Part: Canned Pineapple Fruit From Thailand,* 65 FR 77851 (December 10, 2000). *See also Final Determination of Sales at Less Than Fair Value: Canned Pineapple Fruit From Thailand,* 60 FR 29553 (June 5, 1995) and *Notice of Antidumping Duty Order and Amended Final Determination: Canned Pineapple Fruit From Thailand,* 60 FR 36775 (July 18, 1995), representing our findings in the last completed segment in which Dole had participated at the time this review was initiated.

Department considers whether an accounting methodology, particularly an allocation methodology, has been historically used by the company. *See* section 773(f)(1)(A) of the Act. In previous segments of this proceeding, the Department has determined that joint production costs (i.e., pineapple and pineapple processing costs) cannot be reasonably allocated to canned pineapple on the basis of weight. *See Final Determination of Sales at Less Than Fair Value: Canned Pineapple Fruit From Thailand*, 60 FR 29553, 29561 (June 5, 1995),[2] and *Notice of Final Results of Antidumping Duty Administrative Review: Canned Pineapple Fruit From Thailand*, 63 FR 7392, 7398 (February 13, 1998). For instance, cores and shells are used in juice production, while trimmed and cored pineapple cylinders are used in CPF production. Because these various parts of a pineapple are not interchangeable when it comes to CPF versus juice production, it would be unreasonable to value all parts of the pineapple equally by using a weight-based allocation methodology.

Several respondents that revised their fruit cost allocation methodologies during the 1995/1996 POR changed from their historical net realizable value (NRV) methodology to weight-based methodologies and did not incorporate any measure of the qualitative factor of the different parts of the pineapple. As a result, such methodologies, although in conformity with Thai GAAP, do not reasonably reflect the costs associated with production of CPF. Therefore, for companies whose fruit cost allocation methodology is weight-based, we requested that they recalculate fruit costs allocated to CPF based on NRV methodology.

Consistent with prior segments of this proceeding, the NRV methodology that we requested respondents to use was based on company-specific historical amounts for sales and separable costs during the five-year period of 1990 through 1994. We initially made this request of all companies in this review except Malee. Because, in the past, Malee had allocated fruit costs on a basis that reasonably takes into account qualitative differences between pineapple parts used in CPF versus juice products in its normal accounting records, we did not originally require it to recalculate its reported costs using the NRV methodology. However, Malee updated its joint cost allocation methodology in 2000. Therefore, pursuant to a supplemental questionnaire, we obtained Malee's calculation of costs based on the Department's historic NRV methodology. For these preliminary results we have continued to use Malee's normal accounting methodology.

We made the following company-specific adjustments to the cost data submitted in this review.

SFP

Based on verification findings, we applied the net realizable value ratio to SFP's shared direct labor, fixed overhead , and variable overhead for all product models. As a result of these adjustments, we revised total cost of manufacturing, general and administrative expenses, and interest expense to reflect these changes. *See* Verification of the Home Market and Comparison Market Sales Information and the Cost Information in the Response of Siam Food Products Public Company Limited in the 2000–01 Administrative Review of Canned Pineapple Fruit from Thailand.

SIFCO

We recalculated SIFCO's pineapple fruit cost allocations for specific CPF product models. SIFCO correctly allocated its overall fruit costs between solid and juice products using its historic NRV ratio. However, SIFCO included a juice product among its solid products which slightly distorts the product model-specific allocations. We excluded this juice product from the fruit cost allocation for solid products. *See* SIFCO Analysis Memorandum.

Using information submitted by SIFCO, we also calculated the per-unit cost of the natural juice packing medium for each of SIFCO's juice-packed product models considered in our cost analysis. *See* SIFCO Analysis Memorandum. In our supplemental questionnaire, we asked that SIFCO calculate the cost of the natural juice packing medium based on NRV and to add this NRV-based cost to its direct material costs. In its supplemental response, SIFCO reported separate juice packing medium costs which we can tie to each product model, but it did not calculate these costs on the basis of NRV. Since we regard natural juice as a joint product with CPF, its pineapple fruit input cost must be linked to the NRV allocation for juice products. The central purpose of establishing the NRV ratio is to divide joint costs between a producer's solid and juice products based on NRV. We understand that SIFCO, in its normal books and records, ascribes the cost of the natural juice packing medium directly to the solid pineapple fruit costs for CPF. However, we note that after the specific CPF forms are packed in the cans, natural juice packing medium is added as another component. Since the natural juice packing medium is part of SIFCO's juice production, to apply the Department's NRV methodology correctly, the cost of the packing medium is added separately to the total direct material costs for CPF and is based on the overall NRV fruit cost allocation to SIFCO's juice production. Therefore, in order to account for the cost of natural juice used in the production of CPF the Department has calculated a separate unit cost for natural juice packing medium based on information from SIFCO's response. *See* SIFCO Analysis Memorandum.

Kuiburi

Based on verification findings, we adjusted Kuiburi's calculation of general and administrative (G&A) expenses and interest expense as a ratio of its cost of goods sold. Kuiburi included packing costs in the denominator of its original calculation of G&A and interest expenses. We recalculated the ratios after adjusting the denominator to deduct Kuiburi's packing costs. *See* Verification of Sales and Cost Information Submitted by Kuiburi Fruit Canning Co., Ltd. in the Sixth Administrative Review of the Antidumping Duty Order on Canned Pineapple Fruit from Thailand.

Vita

Based on verification findings, we adjusted Vita's allocation of fruit costs to canned pineapple products. Vita allocated fruit costs to canned pineapple fruit as fruit costs to solid products times the drained weight of canned pineapple fruit divided by the sum of the drained weights of canned pineapple fruit, tropical fruit and pouch pack products, i.e., all solid products containing pineapple. We found that Vita had erroneously multiplied the ratio to packing medium weight instead of total drained weight of the pineapple in the product. By adjusting the allocation of pineapple cost to tropical fruit, we also necessarily adjusted the cost of pineapple allocable to canned pineapple fruit products. *See* Verification of the Home Market and Comparison Market Sales Information and the Cost Information in the Response of Vita Food Factory (1989) Co., Ltd. in the 2000–2001 Administrative Review of Canned

[2] This determination was upheld by the Court of Appeals for the Federal Circuit. *The Thai Pineapple Public Co.* v. *United States*, 187 F.3d 1362 (Fed. Cir. 1999) (finding that the Department's cost allocation methodology in the original investigation was reasonable and supported by substantial evidence).

Pineapple Fruit from Thailand, dated July 31, 2002.

2. Test of Comparison Market Sales Prices

As required under section 773(b) of the Act, we compared the adjusted weighted-average COP for each respondent to the comparison market sales of the foreign like product, in order to determine whether these sales had been made at prices below the COP within an extended period of time in substantial quantities, and whether such prices were sufficient to permit the recovery of all costs within a reasonable period of time. On a product-specific basis, we compared the revised COP to the comparison market prices, less any applicable movement charges, taxes, rebates, commissions and other direct and indirect selling expenses.

3. Results of the COP Test

Pursuant to section 773(b)(2)(C) of the Act, where less than 20 percent of a respondent's sales of a given product were made at prices below the COP, we did not disregard any below-cost sales of that product because the below-cost sales were not made in ''substantial quantities.'' Where (1) 20 percent or more of a respondent's sales of a given product were made at prices below the COP and thus such sales were made within an extended period of time in substantial quantities in accordance with sections 773(b)(2)(B) and (C) of the Act, and (2) based on comparisons of price to weighted-average COPs for the POR, we determined that the below-cost sales of the product were at prices which would not permit recovery of all costs within a reasonable time period, in accordance with section 773(b)(2)(D) of the Act, we disregarded the below-cost sales.

We found that for certain CPF products, Dole, Kuiburi, TIPCO, SFP, SIFCO, Malee, TPC and Vita made comparison-market sales at prices below the COP within an extended period of time in substantial quantities. Further, we found that these sales prices did not permit the recovery of costs within a reasonable period of time. We therefore excluded these sales from our analysis in accordance with section 773(b)(1) of the Act.

C. Calculation of Normal Value Based on Comparison Market Prices

We determined price-based NVs for each company as follows. For all respondents, we made adjustments for differences in packing in accordance with sections 773(a)(6)(A) and 773(a)(6)(B)(i) of the Act, and we deducted movement expenses consistent with section 773(a)(6)(B)(ii) of the Act. In addition, where applicable, we made adjustments for differences in cost attributable to differences in physical characteristics of the merchandise pursuant to section 773(a)(6)(C)(ii) of the Act, as well as for differences in circumstances of sale (COS) in accordance with section 773(a)(6)(C)(iii) of the Act and 19 CFR 351.410. We also made adjustments, in accordance with 19 CFR 351.410(e), for indirect selling expenses incurred on comparison market or U.S. sales where commissions were granted on sales in one market but not in the other (the ''commission offset''). Specifically, where commissions were granted in the U.S. market but not in the comparison market, we made a downward adjustment to NV for the lesser of (1) the amount of the commission paid in the U.S. market, or (2) the amount of indirect selling expenses incurred in the comparison market. If commissions were granted in the comparison market but not in the U.S. market, we made an upward adjustment to NV following the same methodology. Company-specific adjustments are described below.

TIPCO

We based third-country market prices on the packed, FOB prices to unaffiliated purchasers in Germany. We adjusted for the following movement expenses: brokerage and handling, port charges, stuffing expenses, liner expenses and foreign inland freight. We made COS adjustments by deducting direct selling expenses incurred for third-country market sales (commissions, credit expenses and bank charges) and adding U.S. direct selling expenses (commissions, credit expenses and bank charges).

SFP

We based third-country market prices on the packed, FOB prices to unaffiliated purchasers in the United Kingdom. We adjusted for foreign movement expenses. We made COS adjustments by deducting direct selling expenses incurred for third-country market sales (credit expenses, bank charges, warranties and commissions) and adding U.S. direct selling expenses (credit expenses, warranties, and bank charges). We applied the commission offset in the manner described above.

Vita

We based home market prices on the packed, delivered prices to unaffiliated purchasers in Thailand. We adjusted for inland freight. We made COS adjustments by deducting direct selling expenses incurred for home market sales (credit expenses, warranty expenses, commissions, and bank charges) and adding U.S. direct selling expenses (credit expenses, commissions and bank charges).

SIFCO

We based third-country market prices on the packed, FOB or C&F prices to unaffiliated purchasers in France. We adjusted for foreign movement expenses and international freight. We made COS adjustments by deducting direct selling expenses incurred for third-country market sales (credit expenses, bank charges, and commissions) and adding U.S. direct selling expenses (credit expenses, bank charges and commissions).

TPC

We based third-country market prices on the packed, FOB or C&F prices to unaffiliated purchasers in Germany. We adjusted for foreign movement expenses and international freight. For comparisons to EP, we made COS adjustments by deducting direct selling expenses incurred for third-country market sales (credit expenses, letter of credit charges, and bank charges) and adding U.S. direct selling expenses (credit expenses, letter of credit charges, bank charges, and warranty expenses). For comparisons to CEP, we made COS adjustments by deducting direct selling expenses incurred on third-country market sales.

Kuiburi

We based third-country market prices on the packed, FOB and CNF prices to unaffiliated purchasers in Spain. We adjusted for foreign movement and international freight expenses. We made COS adjustments by deducting direct selling expenses incurred for third-country market sales (credit expenses and bank charges) and adding U.S. direct selling expenses (credit expenses, bank charges, and commissions).

Malee

We based home market prices on the packed, delivered prices to unaffiliated purchasers in Thailand. We adjusted for foreign inland freight. We made COS adjustments by deducting direct selling expenses incurred for home market sales (credit expenses, warranty expenses, advertising expenses and commissions). We also made a level of trade (LOT) adjustment where appropriate. See the *Level of Trade* section, below.

Dole

We based third-country market prices on Dole Foods of Canada Ltd.''s (DFC)

prices to unaffiliated purchasers in Canada. We adjusted for foreign movement expenses and international freight. We made COS adjustments by deducting direct selling expenses incurred on third-country market sales. In addition, because the NV level of trade (LOT) is more remote from the factory than the CEP LOT (see the *Level of Trade* section, below), and there is no basis for determining whether the difference in the levels of trade between NV and CEP affects price comparability, we made a CEP offset pursuant to section 773(a)(7)(B) of the Act.

D. Calculation of Normal Value Based on Constructed Value

For those CPF products for which we could not determine the NV based on comparison market sales because there were no contemporaneous sales of a comparable product in the ordinary course of trade, we compared the EP or CEP to CV. In accordance with section 773(e) of the Act, we calculated CV based on the sum of the COM of the product sold in the United States, plus amounts for SG&A expenses, comparison market profit, and U.S. packing costs. We calculated each respondent's CV based on the methodology described in the *Calculation of COP* section of this notice, above. In accordance with section 773(e)(2)(A) of the Act, we used the actual amounts incurred and realized by each respondent in connection with the production and sale of the foreign like product, in the ordinary course of trade, for consumption in the comparison market to calculate SG&A expenses and comparison market profit.

For price-to-CV comparisons, we made adjustments to CV for COS differences, in accordance with section 773(a)(8) of the Act and 19 CFR 351.410. We made COS adjustments by deducting direct selling expenses incurred on comparison market sales and adding U.S. direct selling expenses for comparison to EP transactions in the United States. We made no price-to-CV comparisons for Kuiburi, TIPCO, SFP or SIFCO because all U.S. sales were compared to contemporaneous sales of a comparable product in the ordinary course of trade. For the other companies we made the following adjustments:

Vita

We made COS adjustments by deducting direct selling expenses incurred for home market sales (credit expenses, warranty expenses, commissions, and bank charges) and adding U.S. direct selling expenses (credit expenses, commissions and bank charges).

TPC

For comparisons to EP, we made COS adjustments by deducting direct selling expenses incurred for third-country market sales (credit expenses, letter of credit charges, and bank charges) and adding U.S. direct selling expenses (credit expenses, letter of credit charges, bank charges, and warranty expenses). For comparisons to CEP, we made COS adjustments by deducting direct selling expenses incurred on third-country market sales.

Malee

We made COS adjustments by deducting direct selling expenses (credit expenses, warranty expenses, advertising expenses and commissions) incurred for home market sales made at the level of trade equivalent to the CEP level of trade.

Dole

We made COS adjustments by deducting direct selling expenses incurred on third-country market sales. In addition, because the NV level of trade (LOT) is more remote from the factory than the CEP LOT (see the *Level of Trade* section, below), and there is no basis for determining whether the difference in the levels of trade between NV and CEP affects price comparability, we made a CEP offset pursuant to section 773(a)(7)(B) of the Act.

Level of Trade

In accordance with section 773(a)(1)(B) of the Act, to the extent practicable, we determine NV based on sales in the comparison market at the same LOT as the EP or CEP transaction. The NV LOT is that of the starting-price sales in the comparison market or, when NV is based on CV, that of the sales from which we derive SG&A expenses and profit. For EP sales, the U.S. level of trade is also the level of the starting-price sale, which is usually from exporter to importer. For CEP sales, it is the level of the constructed sale from the exporter to the importer.

To determine whether NV sales are at a different LOT than EP or CEP transactions, we examine stages in the marketing process and selling functions along the chain of distribution between the producer and the unaffiliated customer. If the comparison-market sales are at a different LOT, and the difference affects price comparability, as manifested in a pattern of consistent price differences between the sales on which NV is based and comparison-market sales at the LOT of the export transaction, we make a level-of-trade adjustment under section 773(a)(7)(A) of the Act. Finally, for CEP sales, if the NV level is more remote from the factory than the CEP level and there is no basis for determining whether the difference in the levels between NV and CEP affects price comparability, we adjust NV under section 773(a)(7)(B) of the Act (the CEP offset provision). *See Final Determination of Sales at Less Than Fair Value: Greenhouse Tomatoes From Canada,* 67 FR 8781 (February 26, 2002).

In implementing these principles in this review, we obtained information from each respondent about the marketing stage involved in the reported U.S. and comparison market sales, including a description of the selling activities performed by the respondents for each channel of distribution. In identifying levels of trade for EP and comparison market sales, we considered the selling functions reflected in the starting price before any adjustments. For CEP sales, we considered only the selling activities reflected in the price after the deduction of expenses and profit under section 772(d) of the Act. We expect that, if claimed LOTs are the same, the functions and activities of the seller should be similar. Conversely, if a party claims that LOTs are different for different groups of sales, the functions and activities of the seller should be dissimilar.

In this review, all respondents except Malee and Dole claimed that all of their sales involved identical selling functions, irrespective of channel of distribution or market. We examined these selling functions for Vita, SIFCO, SFP, TIPCO, TPC, and Kuiburi, and found that sales activities were limited to negotiating sales prices, processing of purchase orders/contracts, invoicing, and collecting payment. There was little or no strategic and economic planning, advertising or sales promotion, technical services, technical assistance, or after-sale service performed in either market by the respondents. Therefore, for all respondents except Malee and Dole, we have preliminarily found that there is an identical LOT in the U.S. and relevant comparison market, and no level-of-trade adjustment is required for comparison of U.S. sales to comparison market sales.

Malee

Malee reported that all of its sales made to the United States were to distributors and involved minimal selling functions on the part of Malee. Malee reported two different channels of distribution for its sales in the home market: (1) Sales through an affiliated

reseller, Malee Enterprise Co. Ltd. (Malee Enterprise) (formerly Malee Supply (1994) Co. Ltd.), which are made at a more advanced marketing stage than the factory-direct sales, and (2) factory-direct sales involving minimal selling functions and which are at a marketing stage identical to that of the CEP transactions after deductions.

In the home market, Malee reported numerous selling functions undertaken by Malee Enterprise for its resales to small wholesalers, retailers and end-users. In addition to maintaining inventory, Malee Enterprise also handled all advertising during the POR. The advertising was directed at the ultimate consumer. Malee also reported that Malee Enterprise replaces damaged or defective merchandise and, as necessary, breaks down packed cases into smaller lot sizes for many sales. Malee made direct sales to hotels, restaurants and industrial users. Malee claimed that its only selling function on direct sales was delivery of the product to the customer.

Our examination of the selling activities, selling expenses, and customer categories involved in these two channels of distribution indicates that they constitute separate levels of trade, and that the direct sales are made at the same level as Malee's U.S. sales. Where possible, we compared sales at Malee's U.S. LOT to sales at the identical home market LOT. If no match was available at the same LOT, we compared sales at Malee's U.S. LOT to Malee's sales through Malee Enterprise at the more advanced LOT.

To determine whether a LOT adjustment was warranted, we examined the prices of comparable product categories, net of all adjustments, between sales at the two home market LOTs we had designated. We found a pattern of consistent price differences between sales at these LOTs. In making the LOT adjustment, we calculated the difference in weighted-average prices between the two different home market LOTs. Where U.S. sales were compared to home market sales at a different LOT, we reduced the home market price by the amount of this calculated LOT difference.

Dole

Dole reported six specific customer categories and one channel of distribution (sales through an affiliated reseller) for its comparison market and seven specific customer categories and one channel of distribution (sales through an affiliated reseller) for its U.S. sales. In its response, Dole claims that all of its sales to unaffiliated comparison market customers (i.e., the six customer categories) are at the same LOT because these sales are made through the same channel of distribution and involve the same selling functions.

Dole had only CEP sales in the U.S. market. Dole reported that its CEP sales were made through a single channel of distribution (*i.e.,* sales through its U.S. affiliate, Dole Packaged Foods (DPF)), which we have treated as one LOT because there is no apparent difference in the selling functions performed by DPF for the different customers. After making the appropriate deductions under section 772(d) of the Act for these CEP sales, we found that the remaining expenses associated with selling activities performed by Dole are limited to expenses related to the arrangement of freight and delivery to the port of export that are reflected in the CEP price. In contrast, the normal value prices include a number of selling expenses attributable to selling activities performed by DFC in the comparison market, such as inventory maintenance, warehousing, delivery, order processing, advertising, rebate and promotional programs, warranties, and market research. Accordingly, we concluded that CEP is at a different LOT from the NV LOT, *i.e.,* the CEP sales are less remote from the factory than are the NV sales.

Having determined that the comparison market sales were made at a level more remote from the cannery than the CEP transactions, we then examined whether a LOT adjustment or CEP offset may be appropriate. In this case, Dole only sold at one LOT in the comparison market; therefore, there is no information available to determine a pattern of consistent price differences between the sales on which NV is based and the comparison market sales at the LOT of the export transaction, in accordance with the Department's normal methodology as described above. *See Porcelain-on-Steel Cookware from Mexico Final Results of Administrative Review,* 65 FR 30068 (May 10, 2000). Further, we do not have information which would allow us to examine pricing patterns based on respondent's sales of other products, and there are no other respondents or other record information on which such an analysis could be based. Accordingly, because the data available do not provide an appropriate basis for making a LOT adjustment, but the LOT in the comparison market is at a more advanced stage of distribution than the LOT of the CEP transactions, we made a CEP offset adjustment in accordance with section 773(a)(7)(B) of the Act. This offset is equal to the amount of indirect expenses incurred in the comparison market not exceeding the amount of indirect selling expenses deducted from the U.S. price in accordance with 772(d)(1)(D) of the Act.

Intent To Revoke in Part

On July 31, 2001, SFP requested that ''the Department revoke the antidumping order in part as regards SFP based on the absence of dumping pursuant to 19 CFR 351.222(b)(2).'' SFP submitted, along with its revocation request, a certification stating that: (1) The company sold subject merchandise at not less than normal value during the POR, and that in the future it would not sell such merchandise at less than normal value (*see* 19 CFR 351.222 (e)(1)(i)); (2) the company has sold the subject merchandise to the United States in commercial quantities during each of the past three years (*see* 19 CFR 351.222(e)(1)(ii)); and (3) the company agreed to its immediate reinstatement in the order, as long as any exporter or producer is subject to the order, if the Department concludes that the company, subsequent to the revocation, sold the subject merchandise at less than NV. *See* 19 CFR 351.222(b)(2)(i)(B), and as referenced at 19 CFR 351.222(e)(1)(iii)).

Based on the preliminary results in this review and the final results of the two preceding reviews (*see Notice of Final Results of Antidumping Duty Administrative Review and Final Determination Not To Revoke Order in Part: Canned Pineapple Fruit From Thailand,* 65 FR 77851 (December 13, 2000) and *Notice of Final Results of Antidumping Duty Administrative Review and Recission of Administrative Review in Part: Canned Pineapple Fruit from Thailand,* 66 FR 52744, (October 17, 2001)), SFP has preliminarily demonstrated three consecutive years of sales at not less than normal value. Furthermore, SFP's aggregate sales to the United States have been made in commercial quantities during the last three segments of this proceeding. *See* the July 31, 2002 Memorandum to Bernard Carreau: Preliminary Determination to Revoke in Part the Antidumping Duty Order on Canned Pineapple Fruit from Thailand. Interested parties are invited to comment in their case briefs on all of the requirements that must be met by SFP under section 351.222 of the Department's regulations in order to qualify for revocation from the antidumping duty order. Based on the above facts and absent any evidence to the contrary, the Department preliminarily determines that the continued application of the order to SFP is not otherwise necessary to offset

dumping. Therefore, if these preliminary findings are affirmed in our final results, we intend to revoke the order with respect to merchandise produced and exported by SFP. In accordance with 19 CFR 351.222(f), we will terminate the suspension of liquidation for any such merchandise entered, or withdrawn from warehouse, for consumption on or after July 1, 2001, and will instruct Customs to refund any cash deposit.

Currency Conversion

We made currency conversions into U.S. dollars in accordance with section 773A of the Act, based on exchange rates in effect on the dates of the U.S. sales as certified by the Federal Reserve Bank.

Preliminary Results of Review

As a result of this review, we preliminarily determine that the following weighted-average margins exist for the period July 1, 1999, through June 30, 2000:

Manufacturer/Exporter	Margin (percent)
Siam Food Products Company Ltd. (SFP)	0.09
Dole Food Company, Inc. (Dole)	0.63
The Thai Pineapple Public Company, Ltd. (TIPCO)	0.44
Kuiburi Fruit Canning Co. Ltd. (Kuiburi)	0.39
Thai Pineapple Canning Industry (TPC)	2.43
Siam Fruit Canning (1988) Co. Ltd. (SIFCO)	0.64
Vita Food Factory (1989) Co. Ltd. (Vita)	1.94
Malee Sampran Public Co., Ltd. (Malee)	0.56

We will disclose the calculations used in our analysis to parties to this proceeding within five days of the publication date of this notice. *See* 19 CFR 351.224(b). Interested parties are invited to comment on the preliminary results. Interested parties may submit case briefs within 30 days of the date of publication of this notice. Rebuttal briefs, limited to issues raised in the case briefs, may be filed not later than 37 days after the date of publication. Parties who submit arguments are requested to submit with each argument: (1) A statement of the issue, (2) a brief summary of the argument and (3) a table of authorities. Further, we would appreciate it if parties submitting written comments would provide the Department with an additional copy of the public version of any such comments on a diskette. Any interested party may request a hearing within 30 days of publication of this notice. See 19 CFR 351.310(c). If requested, a hearing will be held 44 days after the publication of this notice, or the first workday thereafter. The Department will publish a notice of the final results of this administrative review, which will include the results of its analysis of issues raised in any written comments or hearing, within 120 days from publication of this notice.

Assessment

Pursuant to 19 CFR 351.212(b), the Department calculated an assessment rate for each importer of subject merchandise. Upon completion of this review, the Department will instruct the U.S. Customs Service to assess antidumping duties on all entries of subject merchandise by that importer. We have calculated each importer's duty assessment rate based on the ratio of the total amount of antidumping duties calculated for the examined sales to the total entered value of examined sales. Where the assessment rate is above *de minimis*, the importer-specific rate will be assessed uniformly on all entries made during the POR.

Cash Deposit Requirements

The following deposit rates will be effective upon publication of the final results of this administrative review for all shipments of CPF from Thailand entered, or withdrawn from warehouse, for consumption on or after the publication date, as provided by section 751(a)(1) of the Act: (1) The cash deposit rate for companies listed above will be the rate established in the final results of this review, except if the rate is less than 0.5 percent and, therefore, *de minimis,* the cash deposit will be zero; (2) for previously reviewed or investigated companies not listed above, the cash deposit rate will continue to be the company-specific rate published for the most recent period; (3) if the exporter is not a firm covered in this review, a prior review, or the less than fair value (LTFV) investigation, but the manufacturer is, the cash deposit rate will be the rate established for the most recent period for the manufacturer of the merchandise; and (4) if neither the exporter nor the manufacturer is a firm covered in this or any previous review or the LTFV investigation conducted by the Department, the cash deposit rate will be 24.64 percent, the ''All Others'' rate established in the LTFV investigation.

These cash deposit requirements, when imposed, shall remain in effect until publication of the final results of the next administrative review.

This notice serves as a preliminary reminder to importers of their responsibility under 19 CFR 351.402(f)(2) to file a certificate regarding the reimbursement of antidumping duties prior to liquidation of the relevant entries during this review period. Failure to comply with this requirement could result in the Secretary's presumption that reimbursement of antidumping duties occurred and the subsequent assessment of double antidumping duties.

This determination is issued and published in accordance with sections 751(a)(1) and 777(i)(1) of the Act.

Dated: July 31, 2002.

Faryar Shirzad,

Assistant Secretary for Import Administration.

[FR Doc. 02–19995 Filed 8–6–02; 8:45 am]

BILLING CODE 3510–DS–P

DEPARTMENT OF COMMERCE

International Trade Administration

[A–549–807]

Certain Carbon Steel Butt-Weld Pipe Fittings From Thailand: Preliminary Results of Antidumping Duty Administrative Review

AGENCY: Import Administration, International Trade Administration, Department of Commerce.

ACTION: Notice of Preliminary Results of Antidumping Duty Administrative Review.

SUMMARY: In response to a timely request by Tube Forgings of America, Inc., (the petitioner), the Department of Commerce (the Department) is conducting an administrative review of the antidumping duty order on certain carbon steel butt-weld pipe fittings (pipe fittings) from Thailand. This review covers Thai Benkan Corporation, Ltd. (TBC), a manufacturer/exporter of this merchandise to the United States, during the period July 1, 2000, through June 30, 2001. We have preliminarily determined that sales of the subject merchandise have been made below normal value (NV). If these preliminary results are adopted in our final results of administrative review, we will instruct the U.S. Customs Service to assess antidumping duties based on the difference between the NV and the export price (EP) or constructed export price (CEP). Interested parties are invited to comment on these preliminary results. Parties who submit arguments in this proceeding are requested to submit with the arguments: (1) a statement of the issues; and (2) a brief summary of the arguments.

EFFECTIVE DATE: August 7, 2002.

FOR FURTHER INFORMATION CONTACT: Zev Primor or Tom Futtner, Antidumping/Countervailing Duty Enforcement, Office 4, Group II, Import Administration, International Trade Administration, U.S. Department of Commerce, 14th Street and Constitution Avenue, N.W., Washington, DC 20230; telephone: (202) 482–4114 or 482–3814, respectively.

SUPPLEMENTARY INFORMATION:

The Applicable Statute And Regulations:

Unless otherwise indicated, all citations to the statute are references to the provisions as of January 1, 1995, the effective date of the amendments made to the Tariff Act of 1930, (the Act) as amended, by the Uruguay Round Agreements Act (URAA). In addition, unless otherwise indicated, all citations to the Department's regulations refer to the regulations codified at 19 CFR Part 351 (2001).

Background

On July 6, 1992, the Department published in the **Federal Register** an antidumping duty order on pipe fittings from Thailand (57 FR 29702). On July 31, 2001, the petitioner requested, in accordance with section 351.213(b) of the Department's regulations, an administrative review of the antidumping duty order on pipe fittings from Thailand covering the period, July 1, 2001, through June 30, 2001. We published a notice of initiation of the review on August 20, 2001(66 FR 43570). On September 13, 2001, the Department sent an antidumping questionnaire to TBC.[1] The Department received questionnaire responses in October and November of 2001. On February 12, 2002, we issued a supplemental questionnaire and received a response to that questionnaire on April 30, 2002. The Department is conducting this review in accordance with section 751 of the Act.

Extension of Deadlines

Under section 751(a)(3)(A) of the Act, the Department may extend the deadline for completion of preliminary review results if it determines that it is not practicable to complete the review within the statutory time limit. On March 12, 2002, the Department extended the time limit for the preliminary results of this case (*see Notice of Extension of Time Limits for Preliminary Results of Antidumping Duty Administrative Review*, 67 FR 11092).

Scope of the Review

The product covered by this order is certain carbon steel butt-weld pipe fittings, having an inside diameter of less than 14 inches, imported in either finished or unfinished form. These formed or forged pipe fittings are used to join sections in piping systems where conditions require permanent, welded connections, as distinguished from fittings based on other fastening methods (*e.g.*, threaded, grooved, or bolted fittings). Carbon steel pipe fittings are currently classified under subheading 7307.93.30 of the Harmonized Tariff Schedule (HTS). Although the HTS subheadings are provided for convenience and customs purposes, our written description of the scope of this proceeding is dispositive. The review covers TBC and the period of review (POR) July 1, 2000, through June 30, 2001.

TBC's Financial Status

TBC informed the Department that it is currently in receivership under Thai bankruptcy law. TBC stated that while it continues its production activities as the debtor-in-possession, it had to lay off a large number of its production and office employees, including managers. According to TBC, these lay-offs have seriously affected TBC's ability to handle its day-to-day bookkeeping and administrative functions. TBC claims that the employees who possessed the experience relevant to the Department's antidumping reviews either left the company or were furloughed indefinitely. The minimal remaining staff is preoccupied with the bankruptcy proceedings, evaluating the company's assets, collecting receivables, negotiating loans and responding to creditors' inquiries. TBC maintains that under these circumstances, it has a limited ability to provide the necessary information to the Department. On numerous occasions, TBC requested extensions of time in order to collect the requested information and respond to the Department's antidumping questionnaires. The Department granted all extension requests and, in order to accommodate TBC, postponed the issuance of the preliminary results in this administrative review. *See* section ''Extension of Deadlines'' above, and letters from Perkins Coie, LLP to the Department, dated October 4, 2001, October 9, 2001, October 26, 2001, and February 13, 2002. The Department also postponed the verification until after the publication of the preliminary results.

Partial Facts Available

Sections 776(a)(2)(A) and 776(a)(2)(B) of the Act, provide for the use of facts available when an interested party withholds information that has been requested by the Department, or when an interested party fails to provide the information requested in a timely manner and in the form required. While the Department granted TBC's requests for additional time to respond to the questionnaires, and TBC did appear to cooperate to the best of its ability, TBC did not submit all the information necessary for the Department to accurately conduct its review. For example, TBC did not, as requested by the Department, submit down-stream home market sales by its affiliated parties to whom TBC sold subject merchandise. *See* the *Affiliation* section of this notice below for a further discussion of TBC's downstream sales in the home market. Similarly, TBC did not provide reliable differences-in-merchandise (DIFMER) or CV data. As a result, the Department's analysis was limited to those U.S. sales by TBC which could be compared to sales of identical merchandise in the home market. *See* Questionnaire Response to Section B, p. 42, dated Nov. 30, 2001, Questionnaire Response to Section C, p. 47, dated Nov. 30, 2001, and Supplemental Questionnaire Response, p. C–11, dated April 30, 2002. As long recognized by the CIT, the burden is on the respondent, not the Department, to create a complete and accurate record. *See Pistachio Group of Association Food Industries* v. *United States,* 641 F. Supp. 31, 39–40 (CIT 1987). Therefore, in accordance with section 776(a)(2) of the Act, we are applying partial facts otherwise available in calculating TBC's dumping margins. However, since TBC did cooperate to the best of its ability, we are not making any adverse assumptions. Therefore, in the absence of downstream sales, as facts available, we have conducted our analysis using sales to unaffiliated home market customers and sales to affiliated parties that passed the arm's-length test. Further, for those U.S. transactions that would have required the use of DIFMER (U.S. sales compared to similar merchandise if the home market) or CV (where there were neither identical nor similar products sold in the home

[1] Section A of the questionnaire requests general information concerning a company's corporate structure and business practices, the merchandise under investigation that it sells, and the manner in which it sells that merchandise in all of its markets. Section B requests a complete listing of all home market sales, or, if the home market is not viable, of sales in the most appropriate third-country market (this section is not applicable to respondents in non-market economy (NME) cases). Section C requests a complete listing of U.S. sales. Section D requests information on the cost of production (COP) of the foreign like product and the constructed value (CV) of the merchandise under investigation. Section E requests information on further manufacturing.

market) to make NV comparisons, we have applied as facts available to those U.S. transactions the weighted-average dumping margin found on the U.S transactions that were compared to sales of identical merchandise in the home market.

Product Comparisons

In accordance with section 771(16) of the Act, all merchandise produced by the respondent, and covered by the description in the *Scope of Investigation* section above, that were sold in Thailand during the POR, are considered to be foreign like products for purposes of determining appropriate product comparisons to U.S. sales. To appropriately match U.S. sales of subject merchandise to sales of the foreign like product in the comparison market, we used the following product characteristics: industry standard, type of fitting, degree of processing, size, thickness, and type of material. As stated above, TBC did not provide the Department with reliable DIFMER figures. Consequently, as discussed above, where there were no sales of identical merchandise in the home market to compare to U.S. sales, we applied facts available.

Normal Value Comparisons

With respect to TBC, in determining whether this respondent's sales of pipe fittings to customers in the United States were made at less than NV, we compared CEP to NV, as described in the *Constructed Export Price*, and *Normal Value* sections of this notice. In accordance with section 777A(d)(2) of the Act, we calculated monthly weighted-average prices for NV and compared these to the prices of individual U.S. transactions.

Constructed Export Price

We treated U.S. transactions as CEP in accordance with section 772(b) of the Act because all U.S. sales were made first to TBC's U.S.-based subsidiary and only after importation were they resold to the first unaffiliated purchaser. We based CEP on the packed FOB or delivered prices to unaffiliated purchasers in the United States. Where appropriate, we made deductions for foreign inland freight from the plant to the port, foreign inland insurance, foreign brokerage and handling, international freight, marine insurance, U.S. customs brokerage and duties, and U.S. inland freight because these expenses were incident to bringing the subject merchandise from the original place of shipment in the exporting country to the place of delivery. In addition, we deducted U.S. indirect selling expenses and inventory carrying costs in accordance with section 772(d)(1) of the Act, and made an adjustment for profit in accordance with section 772(d)(3) of the Act. We also increased CEP by the reported amount of duty drawback.

Normal Value

A. Viability

In accordance with section 773(a)(1)(C)(ii) of the Act, we preliminarily determine that the home market for the respondent serves as a viable basis for calculating NV because the aggregate volume of the respondent's home market sales of the foreign like product was greater than five percent of the aggregate volume of its U.S. sales of the subject merchandise.

B. Affiliated-Party Transactions and Arm's-Length Test

1. Affiliation

As stated above, a portion of TBC's merchandise was sold during the POR through the reseller, Marubeni Thailand Co., Inc., (Marubeni Thailand). In its October 24, 2001, questionnaire response, TBC states that Marubeni Thailand and TBC are ''affiliated'' because of TBC's substantial ''dependence'' on Marubeni Thailand for its home market sales. TBC further stated that it intended to report to the Department the downstream sales by Marubeni Thailand to the first unaffiliated customer in the home market. *See* Antidumping Questionnaire Response, Section A, p. A–9, dated October 24, 2001. On October 26, 2001, however, TBC notified the Department that due to the financial difficulties stemming from its bankruptcy proceedings, it was not able to obtain the cooperation of Marubeni Thailand in reporting downstream sales from Marubeni Thailand to the first unrelated home market customer. TBC asked the Department for additional time to collect this information. *See* Letter to the Department from Yoshihiro Saito, counsel to TBC. The Department granted TBC's request.

On November 30, 2001, TBC submitted its questionnaire response for home market sales (Section B) stating that it was unable to obtain down stream sales from Marubeni Thailand. See TBC's Questionnaire Response (Section B), at 7. On February 13, 2002, the Department issued a supplemental questionnaire again requesting downstream sales from Marubeni Thailand. On April 30, 2002, TBC stated that it was unable to obtain such information and urged the Department to reconsider the ''affiliation'' between Marubeni Thailand and itself. TBC reasoned that the affiliation no longer applied in the current administrative review because: (1) There is no direct stock ownership between TBC and Marubeni Thailand; (2) although Marubeni Japan owns stock in both TBC and Marubeni Thailand, the two Thai-based companies are not under ''common control'' of Marubeni Japan; (3) unlike in the prior review, TBC no longer depends heavily on Marubeni Thailand's home market network of customers; and (4) TBC uses Marubeni Thailand as a reseller primarily to protect itself against bad debts, *i.e.*, as a ''credit hedge.'' *See* TBC's Supplemental Questionnaire Response, at B5–B8.

The Department preliminarily disagrees with TBC's conclusion that it is no longer affiliated with Marubeni Thailand. This is consistent with the prior review of the antidumping duty order, in which TBC reported Marubeni Thailand as an affiliated party and provided downstream sales from Marubeni Thailand to the first unrelated customer. *See Certain Carbon Steel Butt-Weld Pipe Fittings from Thailand; Final Results of Antidumping Duty Administrative Review*, 64 FR 68487 (Dec. 13, 1999). In the instant review, there were no changes in stock ownership or business relations among all relevant parties. The fact that TBC's was unable to obtain downstream sales does not change its status as a party affiliated with Marubeni Thailand. Consequently, for these preliminary results, we will continue to treat TBC and Marubeni Thailand as affiliated parties.

2. Arm's-Length Test

TBC reported that it made home market sales to both affiliated and unaffiliated companies. *See* Questionnaire Response to Section B, p. 7, dated Nov. 30, 2001. We applied the arm's-length test by comparing sales made to TBC's home market affiliate to sales of identical merchandise from TBC to unaffiliated home market customers. To test whether these sales were made at arm's-length prices, we compared model-specific prices to affiliated and unaffiliated customers net of all discounts and rebates, movement charges, direct selling expenses, and home market packing. Where, for the tested models of subject merchandise, prices to the affiliated party were on average 99.5 percent or more of the price to the unaffiliated parties, we determined that sales made to the affiliated party were at arm's-length. *See* 19 CFR 351.403(c) and *Preamble - Department's Final Antidumping Regulations* 62 FR 27296, 27355 (May

19, 1997). If the sales to the affiliated customer satisfied the arm's-length test, we used them in our analysis. If the sales to the affiliated customer in the home market did not satisfy the arm's-length test, sales to that customer were excluded from our analysis because we considered them to be outside the ordinary course of trade. *See* 19 CFR 351.102 (defining ''ordinary course of trade'').

Level of Trade/CEP Offset

Section 773(a)(1)(B)(i) of the Act states that, to the extent practicable, the Department will calculate NV based on sales at the same level of trade (LOT) as the EP or CEP transaction. Sales are made at different LOTs if they are made at different marketing stages (or their equivalent). *See* 19 CFR 351.412(c)(2). Substantial differences in selling activities are a necessary, but not sufficient, condition for determining that there is a difference in the stages of marketing. *See Notice of Final Determination of Sales at Less Than Fair Value: Certain Cut-to-Length Carbon Steel Plate From South Africa (CTL Plate from South Africa)*, 62 FR 61731, 61732 (November 19, 1997). To determine whether the comparison sales were at different stages in the marketing process than the U.S. sales, we reviewed the distribution system in each market (*i.e.*, the chain of distribution), including selling functions, class of customer (customer category), and the level of selling expenses for each type of sale. Also, pursuant to 19 CFR 351.412 (c), in identifying the LOT for CEP sales, we considered only the selling activities reflected in the price after the deduction of expenses and profit under section 772(d) of the Act. *See Micron Technology, Inc.* v. *United States,* 243 F3d 1301, 1314–1315 (Fed. Cir. 2001).

When the Department is unable to match U.S. sales to sales of the foreign like product in the comparison market at the same LOT as the EP or CEP, the Department may compare the U.S. sale to sales at a different LOT in the comparison market. In comparing EP or CEP sales at a different LOT in the comparison market, where available data make it practicable, we make an LOT adjustment under section 773(a)(7)(A) of the Act. Finally, for CEP sales only, if a NV LOT is more remote from the factory than the CEP LOT and we are unable to make an LOT adjustment, the Department grants a CEP offset, as provided in section 773(a)(7)(B) of the Act. *See CTL Plate from South Africa.*

We obtained information from TBC regarding the marketing stages involved in making the reported home market and U.S. sales, including a description of the selling activities performed by TBC for *each* channel of distribution. While TBC did not request an LOT adjustment, it did request a CEP offset.

TBC reported home market sales to three customer categories through three distribution channels. In each of the distribution channels, TBC offered to its customers the same type of services such as booking orders, arranging freight, inventory maintenance, technical assistance and general customer service. Based on an analysis of the level and nature of the selling functions performed in each home market channel of distribution, we find that TBC's home market sales comprise a single LOT. For details, see the July 31, 2002, Memorandum to the File regarding TBC: *Level of Trade Analysis.*

For its U.S. sales, TBC reported CEP sales made to a single customer category through one channel of distribution. After deducting the CEP selling expenses incurred by its U.S. affiliate, Benkan America, Inc. (BAI) and reviewing the U.S. market selling functions reported by TBC, we found that TBC's United States sales also comprise a single LOT. *Id.* at 3.

In determining whether different LOTs existed in the home and U.S. markets, we examined whether TBC's sales in the two markets involved different marketing stages (or their equivalent) based on the channel of distribution, customer categories and selling functions reported. In analyzing TBC's selling activities for CEP sales, we noted, preliminarily, that the home market LOT is different from, and constitutes a more advanced stage of distribution, than the CEP LOT because after making the CEP deductions under section 772(d) of the Act, the home market LOT includes significantly more selling functions than the CEP LOTs. While in the home market TBC performs selling functions such as booking orders, price negotiation, arranging freight, inventory maintenance, etc., it does not offer similar selling functions in the U.S. market. Therefore, because of the nature and level of selling functions offered by TBC in the home market, we find that the home market LOT is at a different, more advanced marketing stage than the CEP LOT. Consequently, since NV is established at a LOT which constitutes a more advanced LOT than the CEP LOT, and the data do not provide an appropriate basis upon which to determine a LOT adjustment (TBC has only one level of trade in the home market), we conclude that TBC is entitled to a CEP offset to NV. *Id.* at 4.

Price-to-Price Comparisons

As stated above, TBC did not report product-specific CV data. *See* TBC's Supplemental Questionnaire Response, at B15–B21. Consequently, we preliminarily determined NV for all U.S. sales based on contemporaneous home market sales for identical merchandise or facts available. In accordance with section 773(a)(1)(B)(i) of the Act, we based NV on the price at which the foreign like product was first sold for consumption in the exporting country in the usual commercial quantities and in the ordinary course of trade and at the same LOT as the CEP sale. In accordance with section 773(a)(6) of the Act, where applicable, we made adjustments to home market prices for movement expenses (inland freight) and credit expenses. To adjust for differences in packing between the two markets, we deducted home market packing costs and added U.S. packing costs.

Currency Conversion

We made currency conversions into U.S. dollars in accordance with section 773A of the Act based on exchange rates in effect on the dates of the U.S. sales, as obtained from the Federal Reserve Bank, the Department's preferred source for exchange rates.

Preliminary Results of the Review

As a result of this review, we preliminarily determine that the following weighted-average dumping margin exists for the period July 1, 2000, through June 30, 2001:

Manufacturer/Exporter	Weighted-Average Margin (percent)
Thai Benkan Corporation, Ltd.	3.15

Pursuant to 19 CFR 351.224(b), the Department will disclose to parties to the proceeding any calculations performed in connection with these preliminary results within 5 days of the date of publication of this notice. Any interested party may request a hearing within 30 days of the date of publication of this notice. Parties who submit arguments in this proceeding are requested to submit with each argument: (1) a statement of the issue; and (2) a brief summary of the argument. The schedule for submitting case briefs will be established after publication of this notice. Rebuttal briefs, which are limited to issues raised in the case briefs, may be filed not later than seven days after the case briefs are filed.

The Department will publish a notice of the final results of this administrative review, which will include the results of its analysis of the issues raised in any written comments or at the hearing, within 120 days from the publication of these preliminary results.

Assessment Rate

The Department shall determine, and Customs shall assess, antidumping duties on all appropriate entries. Upon completion of this review, the Department will issue appraisement instructions directly to Customs. The final results of this review shall be the basis for the assessment of antidumping duties on entries of merchandise covered by the determination and for future deposits of estimated duties. For assessment of CEP sales, we have calculated a per-unit importer-specific assessment rate by aggregating the dumping margins calculated for all U.S. sales to each importer and dividing this amount by the total quantity of those sales. Where the importer-specific assessment rate is above *de minimis*, the Department will instruct Customs to assess antidumping duties on all entries of subject merchandise by that importer during the POR.

Cash Deposit Requirements

Furthermore, the following cash deposit requirements will be effective upon completion of the final results of this administrative review for all shipments of pipe fittings from Thailand entered, or withdrawn from warehouse, for consumption on or after the publication date of the final results of this administrative review, as provided by section 751(a)(1) of the Act: (1) the cash deposit rate for the reviewed company will be the rate established in the final results of this administrative review, except if the rate is less than 0.5 percent *ad valorem* and, therefore, *de minimis*, no cash deposit will be required; (2) for exporters not covered in this review, but covered in the original less than fair value (LTFV) investigation or a previous review, the cash deposit rate will continue to be the company-specific rate published in the most recent period; (3) if the exporter is not a firm covered in this review, a previous review, or the original LTFV investigation, but the manufacturer is, the cash deposit rate will be the rate established for the most recent period for the manufacturer of the merchandise; and (4) if neither the exporter nor the manufacturer is a firm covered in this or any previous reviews or the original LTFV investigation, the cash deposit rate will be 39.10 percent, the ''All Others'' rate which is based on the LTFV investigation (57 FR 29702, July 6, 1992). These requirements, when imposed, shall remain in effect until publication of the final results of the next administrative review.

Notification to Importers

This notice serves as a preliminary reminder to importers of their responsibility under 19 CFR 351.402(f) to file a certificate regarding the reimbursement of antidumping duties prior to liquidation of the relevant entries during this review period. Failure to comply with this requirement could result in the Secretary's presumption that reimbursement of antidumping duties occurred and the subsequent assessment of double antidumping duties.

This administrative review and notice are issued and published in accordance with sections 751(a)(1) and 777(i)(1) of the Act (19 U.S.C. 1675(a)(1) and 1677f(i)(1)).

DATED: July 31, 2002.

Faryar Shirzad,

Assistant Secretary for Import Administration.

[FR Doc. 02–19984 Filed 8–6–02; 8:45 am]

BILLING CODE 3510–DS–S

DEPARTMENT OF COMMERCE

International Trade Administration

[A–337–803]

Notice of Preliminary Results of Antidumping Duty Administrative Review, Preliminary Determination To Revoke the Order in Part, and Partial Rescission of Antidumping Duty Administrative Review: Fresh Atlantic Salmon From Chile

AGENCY: Import Administration, International Trade Administration, Department of Commerce.

SUMMARY: In response to requests by fifteen producers/exporters of subject merchandise and L.R. Enterprises,[1] the Department of Commerce (the Department) is conducting an administrative review of the antidumping duty order on fresh Atlantic salmon from Chile. This review covers seventeen producers/exporters of the subject merchandise. The period of review (POR) is July 1, 2000, through June 30, 2001.

We preliminarily determine that sales of subject merchandise by four of the respondents under review have been made below normal value (NV). If these preliminary results are adopted in our final results, we will instruct the U.S. Customs Service to assess antidumping duties on appropriate entries based on the difference between the export price (EP) or constructed export price (CEP) and the normal value.

We are also rescinding this review with respect to 68 producers, and preliminarily rescinding this review with regard to one producer. Furthermore, if these preliminary results are adopted in our final results of this administrative review, we intend to revoke the antidumping order with respect to Cultivos Marinos Chiloe Ltda. (Cultivos Marinos), Pesquera Eicosal Ltda. (Eicosal), Salmones Mainstream S.A. (Mainstream), and Salmones Pacifico Sur, S.A. (Pacifico Sur). We do not intend to revoke the antidumping duty order with respect to Cultivadora de Salmones Linao Ltda. (Linao) and Salmones Tecmar, S.A. (Tecmar) because we have calculated a preliminary antidumping margin for these companies in this administrative review. If the final results of the review are positive antidumping margins for Linao and Tecmar, these companies will not have had sales not below their normal values for three consecutive years and, therefore, will not be eligible for revocation. We do not intend to revoke the antidumping duty with respect to Marine Harvest Chile S.A. (Marine Harvest), either. Marine Harvest, as currently constituted, had not existed for three years as of the end of the current review period, and has only been reviewed for two consecutive periods.[2] *See Preliminary Determination Not To Revoke* section of this notice.

Interested parties are invited to comment on these preliminary results. Parties that submit arguments are requested to submit with each argument: (1) A statement of the issue and (2) a brief summary of the argument. Further, we would appreciate parties submitting comments to provide the Department with an additional copy of the public version of any such comments on diskette.

EFFECTIVE DATE: August 7, 2002.

FOR FURTHER INFORMATION CONTACT: Tracy Levstik or Constance Handley, at (202) 482–2815 or (202) 482–0631, respectively; AD/CVD Enforcement Office V, Group II, Import Administration, International Trade Administration, U.S. Department of Commerce, 14th Street & Constitution Avenue, NW., Washington, DC 20230.

SUPPLEMENTARY INFORMATION:

[1] L.R. Enterprises is a domestic producer of subject merchandise with operations in Lubec, Maine.

[2] In reaching its determination on this issue, the Department is mindful of the fact that its determination in the changed circumstances review is currently under review by the U.S. Court of International Trade. The outcome of this litigation may affect the Department's determination regarding revocation for Marine Harvest in this proceeding.

Applicable Statute and Regulations

Unless otherwise indicated, all citations to the Tariff Act of 1930, as amended (the Act), are references to the provisions effective January 1, 1995, the effective date of the amendments made to the Act by the Uruguay Round Agreements Act (URAA). In addition, unless otherwise indicated, all citations to the Department's regulations are to 19 CFR part 351 (2001).

Case History

On July 30, 1998, the Department issued an antidumping duty order on fresh Atlantic salmon from Chile. *See Notice of Amended Final Determination of Sales at Less Than Fair Value and Antidumping Duty Order: Fresh Atlantic Salmon from Chile,* 63 FR 40699 (July 30, 1998). On July 2, 2001, the Department issued a notice of opportunity to request an administrative review of this order. *See Antidumping or Countervailing Duty Order, Finding, or Suspended Investigation; Opportunity to Request Administrative Review,* 66 FR 34910 (July 2, 2001).

In accordance with 19 CFR 351.213(b)(2), the following producers/exporters made timely requests that the Department conduct an administrative review for the period from July 1, 2000, through June 30, 2001: (1) Chile Cultivos, S.A. (Chile Cultivos); (2) Linao; (3) Cultivos Marinos; (4) Fiordo Blanco S.A. (Fiordo Blanco); (5) Invertec Pesquera Mar de Chiloe Ltda (Invertec); (6) Marine Harvest; (7) Pesca Chile S.A. (Pesca Chile); (8) Eicosal; (9) Pesquera Pacific Star (Pacific Star); (10) Robinson Crusoe Y Cia. Ltda. (Robinson Crusoe); (11) Salmones Friosur S.A. (Friosur); (12) Mainstream; (13) Salmones Multiexport Ltda. (Multiexport); (14) Pacifico Sur; and (15) Tecmar.

In addition, on July 31, 2001, L.R. Enterprises, Inc., a domestic producer of subject merchandise, requested a review of 86 producers/exporters of fresh Atlantic salmon. As explained below, L.R. Enterprises, Inc., subsequently withdrew its request for review of all but 17 of these companies.

On August 20, 2001, we published the notice of initiation of this antidumping duty administrative review, covering the period July 1, 2000, through June 30, 2001. *See Initiation of Antidumping and Countervailing Duty Administrative Reviews and Requests for Revocation in Part,* 66 FR 43570 (August 20, 2001).

Per letters filed on September 4, 7, 19, October 18, and November 1 and 16, 2001, L.R. Enterprises, Inc., withdrew its request for review for all companies except the following: (1) Cultivos Marinos; (2) Eicosal; (3) Friosur; (4) Invertec; (5) Linao; (6) Los Fiordos Ltda. (Los Fiordos); (7) Mainstream; (8) Marine Harvest; (9) Multiexport; (10) Ocean Horizons Chile S.A. (Oceans Horizons); (11) Pacifico Sur; (12) Patagonia Salmon Farming S.A. (Patagonia); (13) Pesca Chile; (14) Robinson Crusoe; (15) Salmones Andes S.A. (Andes); (16) Salmones Unimarc, S.A. (Salmones Unimarc), and (17) Tecmar.

On September 13, 2001, Chile Cultivos submitted a letter withdrawing its request for an administrative review.

Partial Rescission of Antidumping Duty Administrative Review

Salmones Unimarc certified to the Department that it had not shipped subject merchandise to the United States during the POR. Our examination of entry data for U.S. imports confirmed that Salmones Unimarc had not shipped subject merchandise to the United States during the POR. Therefore, pursuant to 19 CFR 315.213(d)(3), we are preliminarily rescinding the review with respect to Salmones Unimarc.

In addition we are rescinding the review with regard to the following companies for which L.R. Enterprises, Inc., withdrew its request for a review, and with regard to Chile Cultivos, which withdrew its request for a review:

Acuicultura de Aquas Australes
Agromar Ltda.
Aguas Claras S.A.
Antarfish S.A.
Aquachile S.A.
Aquasur Fisheries Ltda.
Asesoria Acuicola S.A.
Australis S.A.
Best Salmon
Cenculmavique
Centro de Cultivo de Moluscos
Cerro Farrellon Ltda.
Chile Cultivos S.A.
Chisal S.A.
Comercializadora Smoltech Ltda.
Complejo Piscicola Coyhaique
Cultivos San Juan
Cultivos Yardan S.A.
Empresa Nichiro Chile Ltda.
Fiordo Blanco
Fisher Farms
Fitz Roy S.A.
Ganadera Del Mar
G.M. Tornagaleones S.A.
Hiuto Salmones S.A.
Huitosal Mares Australes Salmo Pac.
Instituto Tecnologico Del Salmon S.A.
Inversiones Pacific Star Ltda.
Manao Bay Fishery S.A.
Mardim Ltda.
Pacific Mariculture
Patagonia Fish Farming S.A.
Pesquera Antares S.A.
Pesquera Chiloe S.A.
Pesquera Friosur S.A.
Pesquera Mares de Chile S.A.
Pesquera Pacific Star
Pesquera Quellon Ltda.
Pesquera Y Comercial Rio Peulla S.A.
Piscicola Entre Rios S.A.
Piscicultura Iculpe
Piscicultura La Cascada
Piscultura Santa Margarita
Productos Del Mar Ventisqueros S.A.
Prosmolt S.A.
Quetro S.A.
River Salmon S.A.
Salmoamerica
Salmones Antarctica S.A.
Salmones Aucar Ltda.
Salmones Caicaen S.A.
Salmones Calbuco S.A.
Salmones Chiloe S.A.
Salmones Huillinco S.A.
Salmones Ice Val Ltda.
Salmones Llanquihue
Salmones Pacific Star Ltda.
Salmones Quellon
Salmones Ranco Sur Ltda.
Salmones Skyring S.A.
Salmones Tierra Del Fuego Ltda.
Salmosan
Seafine Salmon S.A.
Soc. Alimentos Maritimos Avalon Ltda.
Soc. Aquacultivos Ltda.
Truchas Aguas Blancas Ltda.
Trusal S.A.
Ventisqueros S.A.

Scope of the Review

The product covered by this review is fresh, farmed Atlantic salmon, whether imported ''dressed'' or cut. Atlantic salmon is the species *Salmo salar,* in the genus *Salmo* of the family *salmoninae.* ''Dressed'' Atlantic salmon refers to salmon that has been bled, gutted, and cleaned. Dressed Atlantic salmon may be imported with the head on or off; with the tail on or off; and with the gills in or out. All cuts of fresh Atlantic salmon are included in the scope of the review. Examples of cuts include, but are not limited to: crosswise cuts (steaks), lengthwise cuts (fillets), lengthwise cuts attached by skin (butterfly cuts), combinations of crosswise and lengthwise cuts (combination packages), and Atlantic salmon that is minced, shredded, or ground. Cuts may be subjected to various degrees of trimming, and imported with the skin on or off and with the ''pin bones'' in or out.

Excluded from the scope are (1) fresh Atlantic salmon that is ''not farmed'' (*i.e.,* wild Atlantic salmon); (2) live Atlantic salmon; and (3) Atlantic salmon that has been subject to further processing, such as frozen, canned, dried, and smoked Atlantic salmon, or processed into forms such as sausages, hot dogs, and burgers.

The merchandise subject to this investigation is classifiable as item

numbers 0302.12.0003 and 0304.10.4093, 0304.90.1009, 0304.90.1089, and 0304.90.9091 of the Harmonized Tariff Schedule of the United States (HTSUS). Although the HTSUS statistical reporting numbers are provided for convenience and customs purposes, the written description of the merchandise is dispositive.

Verification

As provided in section 782(i)(2) of the Act, we verified information provided by Cultivos Marinos, Eicosal, Mainstream, Marine Harvest, Pacifico Sur, Tecmar and Linao. We used standard verification procedures, including on-site inspection of the respondent producers' facilities and examination of relevant sales and financial records.

Fair Value Comparisons

We compared the export price (EP) or constructed export price (CEP) to the NV, as described in the *Export Price and Constructed Export Price* and *Normal Value* sections of this notice. We first attempted to compare contemporaneous sales of products sold in the United States and comparison markets that are identical with respect to the matching characteristics. Pursuant to section 771(16) of the Act, all products produced by the respondents that fit the definition of the scope of the review and were sold in the comparison markets during the POR fall within the definition of the foreign like product. We have relied on four criteria to match U.S. sales of subject merchandise to comparison market sales of the foreign like product: form, grade, weight band, and trim. As in all previous administrative reviews, we have determined that it is generally not possible to match products of dissimilar forms, grades, and weight bands, because there are significant differences among products that cannot be accounted for by means of a difference-in-merchandise adjustment; we did, where appropriate, make comparisons of merchandise with different trims. (Unlike the other three physical characteristics, trim is the result of a processing operation with readily identifiable differences in the variable cost of manufacturing, which permits the comparison of similar products with a difference-in-merchandise adjustment.) *See Notice of Final Results of Antidumping Duty Administrative Review: Fresh Atlantic Salmon from Chile,* 65 FR 78472 (December 15, 2000). Where there were no appropriate sales of comparable merchandise, we compared the merchandise sold in the United States to constructed value (CV).

Collapse of Affiliated Parties

In November 2000, Linao and Tecmar were wholly purchased by a common parent, Fjord Seafood ASA. Such members of a corporate grouping are considered affiliated parties under section 351.102(b) of the Department's regulations (defining ''affiliated'' parties). Section 351.401(f)(1) of the regulations provides for affiliated producers of subject merchandise to be treated as a single entity (*i.e.,* collapsed), where (1) those producers have production facilities for similar or identical products that would not require substantial retooling of either facility in order to restructure manufacturing priorities and (2) the Department concludes that there is a significant potential for manipulation of price or production.

Section 351.401(f)(2) of the Department's regulations provides factors for the Department to consider when looking for a significant potential for manipulation of price or production, namely (i) the level of common ownership; (ii) the extent to which managerial employees or board members of one firm sit on the board of directors of an affiliated firm; and (iii) whether operations are intertwined, such as through the sharing of sales information, involvement in production and pricing decisions, the sharing of facilities or employees, or significant transactions between the affiliated producers. Because they were purchased by a common parent during the POR and have production facilities for identical products, we find that there is a significant potential for the manipulation of prices or production. Accordingly, for the period November 15, 2000 through June 30, 2001 we have collapsed Linao and Tecmar (Linao/Tecmar) for purposes of our analysis.

Export Price and Constructed Export Price

For the price to the United States, we used, as appropriate, EP or CEP as defined in sections 772(a) and 772(b) of the Act, respectively. Section 772(a) of the Act defines EP as the price at which the subject merchandise is first sold (or agreed to be sold) before the date of importation by the exporter or producer outside the United States to an unaffiliated purchaser for exportation to the United States. Section 772(b) of the Act defines CEP as the price at which the subject merchandise is first sold inside the United States before or after the date of importation, by or for the account of the producer or exporter of the merchandise, or by a seller affiliated with the producer or exporter, to an unaffiliated purchaser, as adjusted under subsections 772(c) and (d) of the Act.

For all respondents, we calculated EP and CEP, as appropriate, based on the packed prices charged to the first unaffiliated customer in the United States. Where sales were made through an unaffiliated consignment broker, we did not consider the consignment broker to be the customer; rather, we considered the customer to be the consignment broker's customer.

In accordance with section 772(c)(2) of the Act, for both the EP and CEP transactions, we reduced the starting price by amounts for movement expenses and export taxes and duties, where appropriate. Section 772(d)(1) of the Act provides for additional adjustments to CEP. Consistent with past practice, for these sales we deducted from the CEP commissions charged to, and other direct expenses incurred for the account of, the producer/exporter related to economic activity in the United States. *See Notice of Preliminary Results of Antidumping Duty Administrative Review and Partial Rescission of Antidumping Administrative Review: Fresh Atlantic Salmon From Chile,* 65 FR 48457, 48460 (August 8, 2000). We did not deduct an amount for CEP profit for these sales, because the commission already contains an element for profit realized by the unaffiliated consignment broker. For Marine Harvest, Multiexport and Pesca Chile, which made sales through an affiliated reseller, we calculated a CEP profit ratio following the methodology set forth in section 772(f) of the Act. We determined the EP or CEP for each company as follows:

Andes

We calculated an EP for all of Andes' sales because the merchandise was sold directly by Andes to the first unaffiliated purchaser in the United States prior to importation, and CEP was not otherwise warranted based on the facts of record. We made deductions from the starting price for movement expenses in accordance with section 772(c)(2)(A) of the Act. These include inland freight, international freight, and brokerage.

Cultivos Marinos

We calculated an EP for all of Cultivos Marinos' sales because the merchandise was sold directly by Cultivos Marinos to the first unaffiliated purchaser in the United States prior to importation, and CEP was not otherwise warranted based on the facts of record. We made deductions from the starting price for movement expenses in accordance with

section 772(c)(2)(A) of the Act. These include foreign inland freight, international freight, U.S. brokerage and U.S. duties. We also deducted the amount for billing adjustments from the starting price and added duty drawback, in accordance with section 772(c)(1)(B) of the Act.

Eicosal

We calculated an EP for all of Eicosal's sales because the merchandise was sold directly by Eicosal to the first unaffiliated purchaser in the United States prior to importation, and CEP was not otherwise warranted based on the facts of record. We made deductions from the starting price for movement expenses in accordance with section 772(c)(2)(A) of the Act. These include inland freight, international freight, U.S. brokerage and U.S. duties. We also deducted the amount for billing adjustments from the starting price and added duty drawback, in accordance with section 772(c)(1)(B) of the Act.

Friosur

We calculated an EP for all of Friosur's sales because the merchandise was sold directly by Friosur to the first unaffiliated purchaser in the United States prior to importation, and CEP was not otherwise warranted based on the facts of record. We made deductions from the starting price for movement expenses in accordance with section 772(c)(2)(A) of the Act. These include inland freight, international freight, domestic and U.S. brokerage and handling expenses, U.S. customs duties and unloading costs. We also added duty drawback to the starting price, in accordance with section 772(c)(1)(B) of the Act.

Invertec

We calculated an EP for all of Invertec's sales because the merchandise was sold directly by Invertec to the first unaffiliated purchaser in the United States prior to importation, and CEP was not otherwise warranted based on the facts of record. We made deductions from the starting price for movement expenses in accordance with section 772(c)(2)(A) of the Act. These include inland freight, international freight, domestic and U.S. brokerage and handling expenses and U.S. customs duties. We also added duty drawback to the starting price, in accordance with section 772(c)(1)(B) of the Act.

Linao and Tecmar

For the period July 1, 2000 through November 14, 2001, we performed company-specific analyses for Linao and Tecmar. As of November 15, 2001, due to our decision to collapse the two companies, the databases of the two companies were merged, and a joint analysis was performed.

During the POR, Linao made both EP and CEP transactions. We calculated an EP for sales where the merchandise was sold directly by Linao to the first unaffiliated purchaser in the United States prior to importation, and CEP was not otherwise warranted based on the facts of record. We calculated a CEP for sales made for the account of the producer/exporter by an unaffiliated consignment broker in the United States after the date of importation. EP and CEP sales were based on the packed, delivered and duty-paid (DDP) U.S. port and CIF U.S. port prices for exportation to the United States. We made deductions from the starting price for discounts and rebates, as well as movement expenses in accordance with section 772(c)(2)(A) of the Act. These include inland freight, international freight, U.S. brokerage, and U.S. duties. We also deducted the amount for billing adjustments from the starting price and added the amount for duty drawback, in accordance with section 772(c)(1)(B) of the Act.

In accordance with section 772(d)(1) of the Act, for CEP sales we also deducted from the starting price those selling expenses that were incurred in selling the subject merchandise in the United States, including commissions to unaffiliated consignment brokers, direct selling expenses (credit expenses and industry association fees), and miscellaneous selling expenses incurred in the United States by the unaffiliated consignment broker on behalf of the exporter which were charged to the respondent separately from the commission. As discussed above, we did not deduct an amount for CEP profit, because the commission to the unaffiliated broker is considered to contain an element of profit.

For Tecmar, we calculated an EP for all of Tecmar's sales because the merchandise was sold directly by Tecmar to the first unaffiliated purchaser in the United States prior to importation, and CEP was not otherwise warranted based on the facts of record. We made deductions from the starting price for movement expenses in accordance with section 772(c)(2)(A) of the Act. These include inland freight, international freight, U.S. brokerage and handling, and U.S. duties. We also added the amount for duty drawback to the starting price, in accordance with section 772(c)(1)(B) of the Act.

Los Fiordos

We calculated an EP for all of Los Fiordos' sales because the merchandise was sold directly by Los Fiordos to the first unaffiliated purchaser in the United States prior to importation and CEP was not otherwise warranted based on the facts of record. We made deductions from the starting price for movement expenses in accordance with section 772(c)(2)(A) of the Act. These include inland freight, international freight, brokerage and handling, and U.S. Customs duties. We also deducted the amount for billing adjustments from the starting price and added duty drawback, in accordance with section 772(c)(1)(B) of the Act.

Mainstream

We calculated an EP for all of Mainstream's sales because the merchandise was sold directly by Mainstream to the first unaffiliated purchaser in the United States prior to importation, and CEP was not otherwise warranted based on the facts of record. We made deductions from the starting price for movement expenses in accordance with section 772(c)(2)(A) of the Act. These include inland freight, international freight, brokerage and handling, and U.S. customs duties. We also deducted the amount for billing adjustments from the starting price and added duty drawback, in accordance with section 772(c)(1)(B) of the Act.

Marine Harvest

We calculated a CEP for Marine Harvest's sales, all of which were made by an affiliated reseller in the United States after the date of importation. We made deductions from the starting price for movement expenses in accordance with section 772(c)(2)(A) of the Act. These include inland freight, international freight, U.S. duties and U.S. brokerage. We also deducted the amount for billing adjustments and rebates from the starting price, in accordance with section 772(c)(1)(B) of the Act, and added duty drawback, in accordance with section 772(c)(1)(B).

In accordance with section 772(d)(1) of the Act, for CEP sales, we deducted from the starting price those selling expenses that were incurred in selling the subject merchandise in the United States, including commissions and other direct selling expenses (credit, inspection association fees, and brokerage, handling and document processing costs). We also deducted from CEP an amount for profit in accordance with section 772(d)(3) of the Act.

Multiexport

During the POR, Multiexport made both EP and CEP transactions. We calculated an EP for sales where the merchandise was sold directly by Multiexport to the first unaffiliated purchaser in the United States prior to importation. We calculated a CEP for sales made for the account of the producer/exporter by an affiliated reseller in the United States after the date of importation.

We made deductions from the starting price for rebates, as well as movement expenses in accordance with section 772(c)(2)(A) of the Act. These include inland freight, international freight, and U.S. duties. We also added the amounts for delivery revenues and for duty drawback, in accordance with section 772(c)(1)(B) of the Act.

In accordance with section 772(d)(1) of the Act, for CEP sales we also deducted from the starting price those selling expenses that were incurred in selling the subject merchandise in the United States, including direct selling expenses (including credit expenses and miscellaneous direct selling expenses), and indirect selling expenses incurred by the affiliated reseller in the United States. We also deducted from CEP an amount for profit in accordance with section 772(d)(3) of the Act.

Ocean Horizons

We calculated a CEP for Ocean Horizon's sales, all of which were made by an affiliated reseller in the United States after the date of importation. We made deductions from the starting price for movement expenses in accordance with section 772(c)(2)(A) of the Act. These include inland freight, international freight, foreign brokerage and handling, and U.S. duties. We also added duty drawback, in accordance with section 772(c)(1)(B) of the Act.

In accordance with section 772(d)(1) of the Act, for CEP sales, we also deducted from the starting price those direct selling expenses that were incurred in selling the subject merchandise in the United States (credit and inspection association fees). We also deducted from CEP an amount for profit in accordance with section 772(d)(3) of the Act.

Pacifico Sur

We calculated an EP for all of Pacifico Sur's U.S. sales because the merchandise was sold directly by Pacifico Sur to the first unaffiliated purchaser in the United States prior to importation, and CEP was not otherwise warranted based on the facts of record. We made deductions from the starting price for movement expenses in accordance with section 772(c)(2)(A) of the Act. These include inland freight, international freight, U.S. brokerage, and U.S. duties. We also added the amount for duty drawback, in accordance with section 772(c)(1)(B) of the Act.

Patagonia

We calculated an EP for all of Patagonia's U.S. sales because the merchandise was sold directly by Patagonia to the first unaffiliated purchaser in the United States prior to importation, and CEP was not otherwise warranted based on the facts of record. We made deductions from the starting price for movement expenses in accordance with section 772(c)(2)(A) of the Act. These include inland freight, international freight, U.S. brokerage, and U.S. duties. We also added the amount for duty drawback, in accordance with section 772(c)(1)(B) of the Act.

Pesca Chile

During the POR, Pesca Chile made both EP and CEP transactions. We calculated an EP for sales where the merchandise was sold directly by Pesca Chile to the first unaffiliated purchaser in the United States prior to importation. We calculated a CEP for sales made for the account of the producer/exporter by an affiliated reseller in the United States after the date of importation.

We made deductions from the starting price for movement expenses in accordance with section 772(c)(2)(A) of the Act. These include inland freight, inland insurance, international freight, warehousing, U.S. brokerage, and U.S. duties. We also deducted the amount for billing adjustments and rebates from the starting price, in accordance with section 772(c)(1)(B) of the Act.

In accordance with section 772(d)(1) of the Act, for CEP sales, we also deducted from the starting price those selling expenses that were incurred in selling the subject merchandise in the United States, including commissions and other direct selling expenses (credit, inspection association fees, and bank charges). We also deducted from CEP an amount for profit in accordance with section 772(d)(3) of the Act.

Robinson Crusoe

We calculated an EP for all of Robinson Crusoe's sales because the merchandise was sold directly by Robinson Crusoe to the first unaffiliated purchaser in the United States prior to importation, and CEP was not otherwise warranted based on the facts of record. We made deductions from the starting price for movement expenses in accordance with section 772(c)(2)(A) of the Act. These include inland freight, inland insurance, international freight, U.S. brokerage and handling, and U.S. duties. We also added the amount for duty drawback to the starting price, in accordance with section 772(c)(1)(B) of the Act.

Normal Value

A. Selection of Comparison Markets

Based on a comparison of the aggregate quantity of home market sales and U.S. sales by Cultivos Marinos, Eicosal, and Multiexport we determined that the quantity of foreign like product sold in Chile permitted a proper comparison with the sales of the subject merchandise to the United States pursuant to section 773(a)(1)(B) of the Act, because the quantity of sales in the home market was more than five percent of the quantity of sales to the U.S. market for each of these respondents. Accordingly, for those three respondents we based NV on home market sales.

Respondents Andes, Friosur, Invertec, Los Fiordos, Mainstream, Marine Harvest, Pesca Chile, and Robinson Crusoe did not have viable home markets, as defined above. Therefore, for these respondents, in accordance with section 773(a)(1)(C) of the Act, we based NV on the price at which the foreign like product was first sold for consumption in each respondent's largest third-country market. For Andes, Friosur, Invertec, Mainstream, Marine Harvest and Pesca Chile, the largest third-country market is Brazil; for Robinson Crusoe, the largest third-country market is Mexico; and for Los Fiordos, the largest third country market is Canada.

Respondents Ocean Horizons, Pacifico Sur and Patagonia did not have any viable comparison market. Therefore, in accordance with section 773(e) of the Act, we based NV for these respondents on CV.

Neither Tecmar nor Linao had viable home markets. In addition, prior to its date of affiliation with Tecmar, Linao did not have a viable comparison market. Therefore, in accordance with section 773(e) of the Act, we based NV for Linao, for the period July 1, 2000 until November 14, 2000, on CV. Tecmar's largest third-country market was Argentina. We used Tecmar's sales to Argentina for the purposes of calculating NV for Tecmar from July 1, 2000 until November 14, 2001. We also used Tecmar's sales to Argentina for the

collapsed entity, Linao/Tecmar, after November 15, 2001.

B. Cost of Production Analysis

Based on a timely allegation filed by L.R. Enterprises, we initiated cost of production (COP) investigations of Multiexport, Robinson Crusoe, Linao and Tecmar, and Pesca Chile to determine whether sales were made at prices below the COP. *See Memorandum From Case Analysts to Gary Taverman,* dated January 23, 2002. In addition, we initiated a cost of production investigation of Marine Harvest to determine whether sales were made at price below the COP. *See Memorandum From Case Analyst to Gary Taverman,* dated February 8, 2002.[3]

Because we disregarded below-cost sales in the calculation of the final results of the second administrative review of Eicosal, we had reasonable grounds to believe or suspect that home market sales of the foreign like product by Eicosal had been made at prices below the COP during the period of this review. Therefore, pursuant to section 773(b)(1) of the Act, we also initiated a COP investigation regarding home market sales by Eicosal.

1. Calculation of COP

In accordance with section 773(b)(3) of the Act, we calculated the weighted-average COP, by model, based on the sum of materials, fabrication, and general and administrative (G&A) expenses. We relied on the submitted COPs except in the specific instances noted below, where the submitted costs were not appropriately quantified or valued.

Eicosal

We revised financial expenses to reflect changes determined at verification.

Linao and Tecmar

We revised G&A and financial expenses to reflect changes determined at verification.

Marine Harvest

We revised the cost of production, variable cost of manufacture and total cost of manufacture reported in Schedule A for two forms/trims, as determined at verification.

Pacifico Sur

We used the revised, verified costs presented at verification.

2. Test of Comparison Market Sales Prices

As required by section 773(b) of the Act, we compared the adjusted weighted-average COP for each respondent subject to a cost investigation to the comparison-market sales prices of the foreign like product, in order to determine whether these sales had been made at prices below the COP within an extended period of time in substantial quantities, and whether such prices were sufficient to permit the recovery of all costs within a reasonable period of time. On a product-specific basis, we compared the COP or revised COP, as appropriate, to the comparison-market prices, less any applicable movement charges, taxes, rebates, commissions, and other direct and indirect selling expenses.

3. Results of the COP Test

We disregarded below-cost sales where (1) 20 percent or more of a respondent's sales of a given product were made at prices below the COP and thus such sales were made within an extended period of time in substantial quantities in accordance with sections 773(b)(2)(B) and (C) of the Act, and (2) based on comparisons of price to weighted-average COPs for the POR, we determined that the below-cost sales of the product were at prices which would not permit recovery of all costs within a reasonable time period, in accordance with section 773(b)(2)(D) of the Act. We disregarded comparison market sales of Eicosal, Linao and Tecmar, Marine Harvest, Multiexport, and Robinson Crusoe.

C. Calculation of Normal Value Based on Comparison-Market Prices

We determined price-based NVs for respondent companies as follows. For all respondents, we made adjustments for any differences in packing, in accordance with section 773(a)(6) of the Act, and we deducted movement expenses pursuant to section 773(a)(6)(B)(ii) of the Act. In addition, where applicable, we made adjustments for differences in cost attributable to differences in physical characteristics of the merchandise pursuant to section 773(a)(6)(C)(ii) of the Act, as well as for differences in circumstances of sale (COS) in accordance with section 773(a)(6)(C)(iii) of the Act and 19 CFR 351.410. We also made adjustments, pursuant to 19 CFR 351.410(e), for indirect selling expenses incurred on comparison-market or U.S. sales where commissions were granted on sales in one market but not in the other (the commission offset).

Company-specific adjustments are described below.

Andes

We based third-country market prices on the packed prices to unaffiliated purchasers in Brazil. We adjusted for the following movement expenses: foreign inland freight and customs brokerage. We made COS adjustments by deducting direct selling expenses incurred for third-country market sales (credit, association fees, Certificate of Origin and Health Certificate fees, and bank charges) and adding U.S. direct selling expenses (credit, association fees, and bank charges). In addition, we deducted third-country packing expenses and added U.S. packing expenses.

Cultivos Marinos

We based home market prices on the packed prices to unaffiliated purchasers in Chile. We adjusted the starting price for foreign inland freight. We made COS adjustments by deducting direct selling expenses incurred for home market sales (credit) and adding U.S. direct selling expenses (credit). We also deducted home market packing expenses and added U.S. packing expenses.

Eicosal

We based home market prices on the packed prices to unaffiliated purchasers in Chile. We adjusted the starting price for foreign inland freight and billing adjustments. We made COS adjustments by deducting direct selling expenses incurred for home market sales (credit) and adding U.S. direct selling expenses (credit, association fees, and bank charges). We also deducted home market packing expenses and added U.S. packing expenses.

[3] On October 30, 2001, L.R. Enterprises filed a cost allegation with respect to Marine Harvest. On January 4, 2002, the Department determined that this allegation was inadequate. *See Letter From Constance Handley to Michael Coursey,* dated January 4, 2002. However, L.R. Enterprises submitted a revised cost allegation on January 7, 2002, which the Department deemed adequate. As such, the Department initiated a cost of production investigation on February 8, 2002.

On November 26, 2001, L.R. Enterprises also filed a cost allegation with respect to Mainstream. On January 23, 2002, the Department determined that this allegation was inadequate, and did not initiate a cost investigation with respect to that respondent. *See Memorandum From Case Analysts to Gary Taverman,* dated January 23, 2002. On February 7, 2002, L.R. Enterprises submitted a letter stating that the Department's decision with regard to Mainstream was based on a flawed analysis. On April 17, 2002, the Department again determined that the allegation of L.R. Enterprises was inadequate and did not initiate a cost investigation with respect to Mainstream. *See Memorandum from Case Analyst to Bernard Carreau, Deputy Assistant Secretary for Import Administration,* dated April 17, 2002.

Friosur

We based third-country market prices on the packed prices to unaffiliated purchasers in Brazil. We deducted billing adjustments and adjusted for the following movement expenses: foreign inland freight, international freight and brokerage and handling. We made COS adjustments by deducting direct selling expenses incurred for third-country market sales (including credit) and adding U.S. direct selling expenses (including credit and quality control expenses). We also added the amount for third-country duty drawback to the starting price. In addition, we deducted third-country packing expenses and added U.S. packing expenses and third-country duty drawback.

Invertec

We based third-country market prices on the packed prices to unaffiliated purchasers in Brazil. We adjusted for the following movement expenses: foreign inland freight, international freight, customs brokerage and special handling expenses. We made COS adjustments by deducting direct selling expenses incurred for third-country market sales (including commissions, credit, certification expenses and bank charges) and adding U.S. direct selling expenses (including credit). We also added the amount for third-country duty drawback to the starting price. In addition, we deducted third-country packing expenses and added U.S. packing expenses and third-country duty drawback.

Linao and Tecmar

For Tecmar, from June 30, 2000 through November 14, 2001 and for the collapsed entity Linao/Tecmar, we based third-country market prices on the packed prices to unaffiliated purchasers in Argentina. We adjusted for the following movement expenses: foreign inland freight, international freight and brokerage and handling. We also added the amount for third-country duty drawback to the starting price. In addition, we deducted third-country packing expenses and added U.S. packing expenses. For comparisons to EP transactions in the United States, we made COS adjustments by deducting direct selling expenses incurred for third-country market sales (including credit, quality control, and health certification) and adding U.S. direct selling expenses (including credit, quality control, and health certification). For comparisons to CEP transactions, we made COS adjustments by deducting direct selling expenses incurred on third-country market sales.

Linao did not have a viable home market or third-country sales prior to its affiliation with Tecmar. As discussed below, we calculated CV for Linao's NV from July 1, 2000 to November 14, 2001.

Los Fiordos

We based third-country market prices on the packed prices to unaffiliated purchasers in Canada. We adjusted for the following movement expenses: foreign inland freight, international freight, and brokerage charges. We made COS adjustments by deducting direct selling expenses incurred for third-country market sales (credit, association fees and bank charges) and adding U.S. direct selling expenses (credit, association fees and bank charges). We also added the amount for third-country duty drawback to the starting price. In addition, we deducted third-country packing expenses and added U.S. packing expenses and third-country duty drawback.

Mainstream

We based third-country market prices on the packed prices to unaffiliated purchasers in Brazil. We adjusted for the following movement expenses: foreign inland freight, international freight, customs fees and airport handling charges. We made COS adjustments by deducting direct selling expenses incurred for third-country market sales (credit, sanitary certification fees, association fees, bank charges, loan guarantee fees, and other direct selling expenses) and adding U.S. direct selling expenses (credit, association fees, and bank charges).

Marine Harvest

We based third-country market prices on the packed prices to unaffiliated purchasers in Brazil. We adjusted for inland freight, a movement expense. We made COS adjustments by deducting direct selling expenses incurred for third-country market sales (credit, inspection association fees, and brokerage, handling and document processing costs). We also added third-country duty drawback to the starting price. In addition, we deducted third-country packing expenses and added U.S. packing expenses.

Multiexport

We based home market prices on the packed prices to unaffiliated purchasers in Chile. We adjusted the starting price for foreign inland freight. We also deducted home market packing expenses and added U.S. packing expenses. For comparison to EP transactions, we made COS adjustments by deducting direct selling expenses incurred for home market sales (credit) and adding U.S. direct selling expenses (credit). For comparisons to CEP transactions, we made COS adjustments by deducting direct selling expenses incurred on home market sales.

Ocean Horizons

Ocean Horizons did not have a viable home market or third-country sales during the POR. As discussed below, we calculated CV for Ocean Horizons' NV.

Pacifico Sur

Pacifico Sur did not have a viable home market or third-country sales during the POR. As discussed below, we calculated CV for Pacifico Sur's NV.

Patagonia

Patagonia did not have a viable home market or third-country sales during the POR. As discussed below, we calculated CV for Patagonia's NV.

Pesca Chile

We based third-country market prices on the packed prices to unaffiliated purchasers in Brazil. We adjusted for the following movement expenses: foreign inland freight and inland insurance. In addition, we deducted third-country packing expenses and added U.S. packing expenses and third-country duty drawback. For comparisons to EP transactions, we made COS adjustments by deducting direct selling expenses incurred for third-country market sales (including commissions, credit, association fees, and bank charges) and adding U.S. direct selling expenses (including commissions, credit, association fees, bank charges, and customs expenses). For comparisons to CEP transactions, we made COS adjustments by deducting direct selling expenses incurred on third-country market sales.

Robinson Crusoe

We based third-country market prices on the packed prices to unaffiliated purchasers in Mexico. We adjusted for the following movement expenses: foreign inland freight and inland insurance. We made COS adjustments by deducting direct selling expenses incurred for third-country market sales (including credit, accounts receivable insurance, association fees, and quality certification inspection expenses) and adding U.S. direct selling expenses (including credit, accounts receivable insurance, association fees, and quality certification inspection expenses). In addition, we deducted third-country packing expenses and added U.S. packing expenses and third-country duty drawback.

D. Calculation of Normal Value Based on Constructed Value

For those sales for which we could not determine NV based on comparison-market sales because there were no contemporaneous sales of a comparable product in the ordinary course of trade, we compared EP or CEP, to CV. Section 773(e) of the Act provides that CV shall be based on the sum of the cost of materials and fabrication for the foreign like product, plus amounts for selling, general and administrative expenses (SG&A), profit, and U.S. packing. We calculated CV based on the methodology described in the COP section, above. In accordance with section 773(e)(2)(A) of the Act, we used the actual amounts incurred and realized by each respondent in connection with the production and sale of the foreign like product, in the ordinary course of trade, for consumption in the comparison market to calculate SG&A expenses and profit. For Linao, from July 1, 2000 through November 14, 2001, and for Ocean Horizons, Pacifico Sur, and Patagonia, which had no comparison market sales, we calculated CV following the same methodology, except that we relied on the weighted-average SG&A and profit ratios of the three respondents (Cultivos Marinos, Eicosal and Multiexport) that had a viable home market, consistent with section 773(e)(2)(B)(ii) of the Act.

For price-to-CV comparisons, we made adjustments to CV for COS differences, pursuant to section 773(a)(8) of the Act. Company-specific adjustments are described below.

Andes

We made COS adjustments by deducting direct selling expenses incurred for third-country market sales (credit, association fees, Certificate of Origin and Health Certificate fees, and bank charges) and adding U.S. direct selling expenses (credit, association fees, and bank charges).

Cultivos Marinos

We made COS adjustments by deducting direct selling expenses incurred for home market sales (credit) and adding U.S. direct selling expenses (credit) and third-country duty drawback.

Eicosal

We made COS adjustments by deducting direct selling expenses incurred for home market sales (credit expense) and adding U.S. direct selling expenses (credit expense, association fees, and bank charges).

Friosur

We made COS adjustments by deducting direct selling expenses incurred for home market sales (including credit and quality control expenses) and adding U.S. direct selling expenses (including credit and quality control expenses).

Linao and Tecmar

For Linao, from July 1, 2000 through November 14, 2001, we made COS adjustments by deducting the weighted-average direct selling expenses incurred by the three respondents that had a viable home market during the period and, for comparison to EP transactions, adding U.S. direct selling expenses (credit, quality control, and health certification expenses).

For Tecmar, and for the collapsed entity Linao/Tecmar, we made COS adjustments by deducting direct selling expenses incurred for third-country market sales (credit, quality control, and health certification expenses). For comparison to EP transactions, we added U.S. direct selling expenses (credit, quality control, and health certification expenses).

Los Fiordos

We made COS adjustments by deducting direct selling expenses incurred for third-country sales (credit, association fees and bank charges) and adding U.S. direct selling expenses (credit, association fees and bank charges).

Mainstream

We made COS adjustments by deducting direct selling expenses incurred for third-country market sales (credit, sanitary certification fees, association fees, bank charges, loan guarantee fees, and other direct selling expenses) and adding U.S. direct selling expenses (credit, association fees, and bank charges).

Marine Harvest

We made COS adjustments by deducting direct selling expenses incurred for third-country sales (credit, inspection association fees, and brokerage, handling and document processing costs).

Multiexport

We made COS adjustments by deducting direct selling expenses incurred for home market sales (credit) and adding U.S. direct selling expenses (credit) for comparison to EP transactions in the United States.

Ocean Horizons

We made COS adjustments deducting the weighted-average direct selling expenses incurred by the three respondents that had a viable home market during the POR.

Pacifico Sur

We made COS adjustments by adding U.S. direct selling expenses (including credit, inspection expenses, airline service charges and food and drug charges) and deducting the weighted-average direct selling expenses incurred by the three respondents that had a viable home market during the POR.

Patagonia

We made COS adjustments by adding U.S. direct selling expenses (including credit and inspection expenses) and deducting the weighted-average direct selling expenses incurred by the three respondents that had a viable home market during the POR.

Pesca Chile

We made COS adjustments by deducting direct selling expenses incurred for third-country sales (credit, commissions, association fees and bank charges). For comparison to EP transactions, we added U.S. direct selling expenses (credit, commissions, association fees and bank charges).

Robinson Crusoe

We made COS adjustments by deducting direct selling expenses incurred for third-country sales (credit, accounts receivable insurance, association fees, and quality certification inspection expenses) and adding U.S. direct selling expenses, including credit, accounts receivable insurance, association fees, and quality certification inspection expenses.

Level of Trade/CEP Offset

In accordance with section 773(a)(1)(B) of the Act, to the extent practicable, we determine NV based on sales in the comparison market at the same level of trade as the EP or CEP transactions. The NV level of trade is that of the starting-price sale in the comparison market or, when the NV is based on CV, that of the sales from which we derive SG&A expenses and profit. For EP sales, the U.S. level of trade is also the level of the starting-price sale, which is usually from the exporter to the importer. For CEP sales, it is the level of the constructed sale from the exporter to the importer.

To determine whether NV sales are at a different level of trade than EP or CEP transaction, we examine stages in the marketing process and selling functions

along the chain of distribution between the producer and the unaffiliated customer. If the comparison-market sales are at a different level of trade, and the difference affects price comparability with U.S. sales, as manifested in a pattern of consistent price differences between the sales on which NV is based and comparison-market sales at the level of trade of the export transaction, we make a level-of-trade adjustment pursuant to section 773(a)(7)(A) of the Act. For CEP sales, if the NV level is more remote from the factory than the CEP level and there is no basis for determining whether the difference in the levels between NV and CEP affects price comparability, we adjust NV pursuant to section 773(a)(7)(B) of the Act (the CEP offset provision). *See Final Determination of Sales at Less Than Fair Value: Greenhouse Tomatoes From Canada,* 67 FR 8781 (February 26, 2002).

To apply these guidelines in this review, we obtained information from each respondent about the marketing stages involved in its reported U.S. and comparison-market sales, including a description of the selling activities performed by the respondent for each of its channels of distribution. In identifying levels of trade for EP and comparison market sales, we considered the selling functions reflected in the starting price before any adjustments. For CEP sales, we considered only the selling activities reflected in the price after the deduction of expenses and profit pursuant to section 772(d) of the Act. Generally, if the claimed levels of trade are the same, the functions and activities of the seller should be similar. Conversely, if a party claims that levels of trade are different for different groups of sales, the functions and activities of the seller should be dissimilar.

In conducting our level-of-trade analysis for each respondent, we took into account the specific customer types, channels of distribution, and selling practices of each respondent. We found that, for all respondents, the fact pattern was virtually identical. Sales to both the U.S. and comparison markets were made to distributors, retailers, and, less commonly, to further-processors.

In this review, only three companies, Pesca Chile, Tecmar and Linao requested LOT adjustments. For each of the respondents, with the exception of Pesca Chile, we found that there was a single level of trade in the United States and a single, identical, level of trade in the comparison market. Therefore, it was not necessary to make any level of LOT adjustments or CEP offset adjustments. The companies requesting an LOT adjustment are discussed below, for all other companies, a discussion of our LOT analysis is included in their respective analysis memorandums.

Pesca Chile

For all its third country and EP sales, the selling functions Pesca Chile performed for its different customer categories and channels of distribution were virtually identical. Therefore, we found the EP and home market levels of trade to be the same and made no level-of-trade adjustment.

With regard to CEP sales, we considered only the selling activities reflected in the price after the deduction of expenses and profit covered in section 772(d) of the Act: customer development, sales negotiation, invoicing and collections, arranging customs clearance and handling any claims. After we deducted the expenses and profit covered in section 772(d), the NV level of trade was more remote from Pesca Chile than that of its U.S. sales through affiliate Pescanova, Inc., as adjusted. In addition, there is only one level of trade in the third-country market and we have no other appropriate information on which to determine if there is a pattern of consistent price differences between the sales on which NV is based and comparison market sales at the level of trade of the export transactions. As a result, we are granting a CEP offset pursuant to section 773(a)(7)(B) of the Act.

Linao and Tecmar

During the POR, Linao claimed a CEP offset for its sales through an unaffiliated consignment broker. During verification, the Department noted that Linao does not perform fewer selling activities for U.S. sales made through the consignment broker than for its comparison-market sales. *See Verification of the Sales and Cost Responses of Cultivadora de Salmones Linao Ltda. and Salmones Tecmar S.A. in the Third Antidumping Duty Administrative Review of Fresh Atlantic Salmon from Chile From Case Analyst to Gary Taverman,* dated July 31, 2002. Therefore, the Department has preliminarily decided to deny Linao's request for a CEP offset. For a further discussion of this issue, which contains proprietary information, see the Analysis Memorandum for Linao and Tecmar.

Preliminary Determination Not To Revoke Order

The Department ''may revoke, in whole or part'' an antidumping order upon completion of a review under section 751 of the Act. While Congress has not specified the procedures that the Department must follow in revoking an order, the Department has developed a procedure for revocation that is described in 19 CFR 351.222(b)(2). In determining whether to revoke an antidumping duty order in part, the Secretary will consider: (A) Whether one or more exporters or producers covered by the order have sold the merchandise at not less than NV for a period of at least three consecutive years; (B) Whether, for any exporter or producer that the Secretary previously has determined to have sold the subject merchandise at less than NV, the exporter or producer agrees in writing to its immediate reinstatement in the order, as long as any exporter or producer is subject to the order, if the Secretary concludes that the exporter or producer, subsequent to the revocation, sold the subject merchandise at less than NV; and (C) Whether the continued application of the antidumping duty order is otherwise necessary to offset dumping.

The Department's regulation requires, *inter alia,* that a company requesting revocation submit the following: (1) A certification that the company has sold the subject merchandise at not less than NV in the current review period and that the company will not sell at less than NV in the future; (2) a certification that the company sold the subject merchandise in commercial quantities in each of the three years forming the basis of the receipt of such a request; and (3) an agreement that the order will be reinstated if the company is subsequently found to be selling the subject merchandise at less than fair value. 19 CFR 351.222(e)(1)(i) *See,* e.g., *Notice of Final Results of Antidumping Duty Administrative Review and Determination Not to Revoke the Antidumping Duty Order: Brass Sheet and Strip From the Netherlands,* 65 FR 742, 743 (January 6, 2000). Cultivos Marinos, Eicosal, Mainstream, and Pacifico Sur each submitted a certification to the effect that for a consecutive three-year period, including the current review period, it sold the subject merchandise in commercial quantities at not less than normal value and that it would continue to do so in the future. Therefore, because we have determined that these respondents satisfy the requirements of 19 CFR 351.222(b), we preliminarily determine to revoke in part the antidumping order with respect to these respondents. Although Linao and Tecmar each submitted this certification also, we have preliminarily calculated an antidumping margin of 1.32 percent for

these companies in this review and these companies do not satisfy the requirements of 19 CFR 351.222(b).

As fully explained in the memorandum concerning the *Preliminary Determination to Revoke in Part the Antidumping Duty Order,* dated July 31, 2002, we have also preliminarily determined not to revoke the antidumping duty order with respect to Marine Harvest. This memorandum is on file in room B–099 of the main Department of Commerce building.

Currency Conversion

We made currency conversions into U.S. dollars in accordance with section 773A of the Act, based on exchange rates in effect on the date of the U.S. sale, as certified by the Federal Reserve Bank.

Preliminary Results of Review

As a result of this review, we preliminarily determine that the following weighted-average margins exist for the period July 1, 1999, through June 30, 2000:

Exporter/manufacturer	Weighted-average margin percentage
Andes	[1]0.16
Cultivos Marinos	[1]0.10
Eicosal	[1]0.44
Friosur	[1]0.18
Invertec	0.00
Linao	1.32
Los Fiordos	1.62
Mainstream	[1]0.05
Marine Harvest	[1]0.11
Multiexport	0.00
Ocean Horizons	[1]0.08
Pacifico Sur	0.00
Patagonia	[1]0.01
Pesca Chile	1.18
Robinson Crusoe	[1]0.06
Tecmar	1.32

[1] *De Minimis.*

The Department will disclose calculations performed within five days of the date of publication of this notice to the parties of this proceeding in accordance with 19 CFR 351.224(b). An interested party may request a hearing within 30 days of publication of these preliminary results. *See* 19 CFR 351.310(c). Any hearing, if requested, will be held 44 days after the date of publication, or the first working day thereafter. Interested parties may submit case briefs and/or written comments no later than 30 days after the date of publication of these preliminary results of review. Rebuttal briefs and rebuttals to written comments, limited to issues raised in such briefs or comments, may be filed no later than 37 days after the date of publication. Parties who submit arguments are requested to submit with the argument (1) a statement of the issue, (2) a brief summary of the argument and (3) a table of authorities. Further, we would appreciate it if parties submitting written comments would provide the Department with an additional copy of the public version of any such comments on diskette. The Department will issue the final results of this administrative review, which will include the results of its analysis of issues raised in any such comments, within 120 days of publication of these preliminary results.

Assessment

Pursuant to 19 CFR 351.212(b), the Department calculated an assessment rate on all appropriate entries. We calculated importer-specific duty assessment rates on the basis of the ratio of the total amount of antidumping duties calculated for the examined sales to the total entered value of the examined sales for that importer. Where the assessment rate is above *de minimis,* we will instruct the U.S. Customs Service to assess duties on all entries of subject merchandise by that importer.

Cash Deposit Requirements

The following deposit rates will be effective upon publication of the final results of this administrative review for all shipments of fresh Atlantic salmon from Chile entered, or withdrawn from warehouse, for consumption on or after the publication date, as provided by section 751(a)(1) of the Act: (1) The cash deposit rates for companies listed above will be the rates established in the final results of this review, except if a rate is less than 0.5 percent, and therefore *de minimis,* the cash deposit will be zero; (2) for previously reviewed or investigated companies not listed above, the cash deposit rate will continue to be the company-specific rate published for the most recent period; (3) if the exporter is not a firm covered in this review, a prior review, or the LTFV investigation, but the manufacturer is, the cash deposit rate will be the rate established for the most recent period for the manufacturer of the merchandise; and (4) if neither the exporter nor the manufacturer is a firm covered in this or any previous review conducted by the Department, the cash deposit rate will be 4.57 percent, the All Others rate established in the LTFV investigation.

These cash deposit requirements, when imposed, shall remain in effect until publication of the final results of the next administrative review.

Because Linao and Tecmar were collapsed for only part of the POR, for the purposes of calculating a duty-deposit rate for the collapsed entity, we have calculated a weighted-average of the rates for both companies during the pre-acquisition period with the rate calculated for the combined entity. For the purposes of assessment, we will rely on the period-specific results.

This notice serves as a preliminary reminder to importers of their responsibility under 19 CFR 351.402(f) to file a certificate regarding the reimbursement of antidumping duties prior to liquidation of the relevant entities during this review period. Failure to comply with this requirement could result in the Secretary's presumption that reimbursement of antidumping duties occurred and the subsequent assessment of double antidumping duties.

This determination is issued and published in accordance with sections 751(a)(1) and 777(i)(1) of the Act.

Dated: July 31, 2002.

Faryar Shirzad,

Assistant Secretary for Import Administration.

[FR Doc. 02–19994 Filed 8–6–02; 8:45 am]

BILLING CODE 3510–DS–P

DEPARTMENT OF COMMERCE

International Trade Administration

[A–549–812]

Notice of Preliminary Results of Antidumping Duty Administrative Review: Furfuryl Alcohol from Thailand

AGENCY: Import Administration, International Trade Administration, U.S. Department of Commerce.

SUMMARY: In response to a request by a U.S. producer, the Department of Commerce (the Department) is conducting an administrative review of the antidumping duty order on furfuryl alcohol from Thailand. This review covers one producer/exporter of the subject merchandise, Indorama Chemicals (Thailand) Limited (Indorama). The period of review (POR) is July 1, 2000, through June 30, 2001.

We preliminarily determine that sales have been made below normal value (NV). If these preliminary results are adopted in our final results, we will instruct the U.S. Customs Service to assess antidumping duties based on the difference between the export price (EP) and the NV.

EFFECTIVE DATE: August 7, 2002.

FOR FURTHER INFORMATION CONTACT: Charles Riggle or Tisha Loeper-Viti at

(202) 482–0650 and (202) 482–7425, respectively; AD/CVD Enforcement Office 5, Group II, Import Administration, International Trade Administration, U.S. Department of Commerce, 14th Street and Constitution Avenue, NW, Washington, DC 20230.

SUPPLEMENTARY INFORMATION:

Applicable Statute and Regulations

Unless otherwise indicated, all citations to the statute are references to the provisions effective January 1, 1995, the effective date of the amendments made to the Tariff Act of 1930 (the Act) by the Uruguay Round Agreements Act (URAA). In addition, unless otherwise indicated, all citations to the Department's regulations are to 19 CFR Part 351 (April 2002).

Case History

On July 25, 1995, the Department issued an antidumping duty order on furfuryl alcohol from Thailand. *See Notice of Amended Final Antidumping Duty Determination and Order: Furfuryl Alcohol from Thailand*, 60 FR 38035 (July 25, 1995). On July 2, 2001, we published in the **Federal Register** the notice of opportunity to request an administrative review of this order. *See Antidumping or Countervailing Duty Order, Finding, or Suspended Investigation; Opportunity to Request Administrative Review*, 66 FR 34910 (July 2, 2001).

On July 31, 2001, a U.S. producer of furfuryl alcohol, Penn Specialty Chemicals, Inc., in accordance with 19 CFR 351.213(b)(1), requested a review of Indorama. On August 20, 2001, we published the notice of initiation of this antidumping duty administrative review, covering the period July 1, 1999, through June 30, 2000. *See Initiation of Antidumping and Countervailing Duty Administrative Reviews and Requests for Revocation in Part*, 66 FR 43570 (August 20, 2001).

Scope of the Review

The merchandise covered by this review is furfuryl alcohol ($C^4H^3OCH^2OH$). Furfuryl alcohol is a primary alcohol, and is colorless or pale yellow in appearance. It is used in the manufacture of resins and as a wetting agent and solvent for coating resins, nitrocellulose, cellulose acetate, and other soluble dyes.

The product subject to this order is classifiable under subheading 2932.13.00 of the Harmonized Tariff Schedule of the United States (HTSUS). Although the HTSUS subheading is provided for convenience and customs purposes, our written description of the scope of this proceeding is dispositive.

Fair Value Comparisons

We compared the EP to the NV, as described in the *Export Price* and *Normal Value* sections of this notice. We were able to compare all sales of furfuryl alcohol made by Indorama to the United States to contemporaneous sales of identical merchandise in the home market.

Export Price

For the price to the United States, we used EP as defined in sections 772(a) of the Act, because all merchandise was sold by Indorama to the first unaffiliated purchaser in the United States outside the United States prior to importation, and CEP was not otherwise indicated. Section 772(a) of the Act defines EP as the price at which the subject merchandise is first sold (or agreed to be sold) before the date of importation by the producer or exporter of the subject merchandise outside of the United States to an unaffiliated purchaser in the United States or to an unaffiliated purchaser for exportation to the United States, as adjusted under subsection (c).

We calculated EP based on the packed CIF destination price to unaffiliated purchasers. In accordance with section 772(c)(2)(A) of the Act, we made additions to the starting price for duty drawback, and deductions from the starting price for foreign movement expenses (*i.e.*, inland freight and inland insurance), U.S. movement expenses (*i.e.*, international freight and marine insurance), and U.S. brokerage and handling. *See Analysis Memorandum for Indorama Chemicals (Thailand) Ltd.*, dated July 31, 2002 (*Indorama Analysis Memo*), on file in the Central Records Unit (CRU), Room B–099 of the Herbert C. Hoover Building, 14th Street and Constitution Avenue, NW, Washington, DC.

Normal Value

A. Selection of Comparison Market

Based on a comparison of the aggregate quantity of home market sales and U.S. sales, we determined that the quantity of foreign like product Indorama sold in Thailand is more than 5 percent of the quantity of its sales to the U.S. market and permits a proper comparison with the sales of the subject merchandise to the United States. *See* section 773(a)(1) of the Act. Therefore, in accordance with section 773(a)(1)(B)(ii) of the Act, we based NV on the price at which the foreign like product was first sold for consumption in the home market.

B. Calculation of Normal Value Based on Comparison Market Prices

We determined price-based NVs for Indorama as follows. We made adjustments for differences in packing in accordance with sections 773(a)(6)(A) and 773(a)(6)(B)(i) of the Act, and we deducted movement expenses (i.e., foreign inland freight and foreign inland insurance) consistent with section 773(a)(6)(B)(ii) of the Act. We also made circumstance of sale (COS) adjustments by deducting direct selling expenses (*i.e.*, credit expenses) incurred on home market sales and adding direct selling expenses (*i.e.*, credit expenses) incurred on U.S. sales. *See Indorama Analysis Memo*.

We note that Indorama, in its November 28 and December 18, 2001, submissions, argued that certain home market sales were outside the ordinary course of trade. Upon examining the information provided, we have preliminarily determined that these sales are within the ordinary course of trade and have, therefore, included these sales in our margin calculation. For further details, *see Indorama Analysis Memo*.

Level of Trade

In accordance with section 773(a)(1)(B) of the Act, to the extent practicable, we determine NV based on sales in the comparison market at the same level of trade (LOT) as the EP or CEP transaction. The NV LOT is that of the starting-price sales in the comparison market or, when NV is based on CV, that of the sales from which we derive SG&A expenses and profit. For EP sales, the U.S. level of trade is also the level of the starting-price sale, which is usually from exporter to importer.

To determine whether NV sales are at a different LOT than the U.S. transactions, we examine stages in the marketing process and selling functions along the chain of distribution between the producer and the unaffiliated customer. If comparison-market sales are at different LOTs, and the difference affects price comparability, as manifested in a pattern of consistent price differences between the sales on which NV is based and the comparison-market sales which are at the same LOT as the export transactions, we make a level-of-trade adjustment under section 773(a)(7)(A) of the Act. *See Final Determination of Sales at Less Than Fair Value: Greenhouse Tomatoes From Canada*, 67 FR 8781 (February 26, 2002).

In implementing these principles in this review, we obtained information

from Indorama about the marketing stage involved in the reported U.S. and home-market sales, including a description of the selling activities performed for each channel of distribution. In identifying levels of trade for EP and home-market sales, we considered the selling functions reflected in the starting price before any adjustments. We expect that, if claimed LOTs are the same,

the functions and activities of the seller should be similar. Conversely, if a party claims that LOTs are different for different groups of sales, the functions and activities of the seller should be dissimilar.

Indorama reported that all of its sales made to the United States were to unaffiliated trading companies. For its sales in the home market, Indorama reported two different channels of distribution, reflecting its two different categories of customers: (1) sales through unaffiliated trading companies, and (2) direct sales to end-users. Indorama claimed that the sales to the trading companies in the United States and to the trading companies in Thailand were at the same level of trade, while sales to end-users in the home market were at a different level of trade.

We examined the selling functions for Indorama in Thailand and the United States and found that sales activities were substantially the same in both markets. We also determined that, while there exist two customer categories in the home market, trading companies and end-users, there is only one channel of distribution, *i.e.*, direct sales from the factory to the unaffiliated customer. Our examination of the selling activities, selling expenses, and customer categories involved in this channel of distribution indicates that it constitutes a single LOT, and, furthermore, that this LOT is equivalent to that of Indorama's U.S. sales.

Currency Conversion

We made currency conversions into U.S. dollars in accordance with section 773A of the Act, based on exchange rates in effect on the dates of the U.S. sales, as certified by the Federal Reserve Bank.

Preliminary Results of Review

As a result of this review, we preliminarily determine that the following weighted-average margin exists for the period July 1, 2000, through June 30, 2001:

Manufacturer/Exporter	Margin (percent)
Indorama Chemicals (Thailand) Ltd.	0.91

We will disclose the calculations used in our analysis to parties to this proceeding within five days of the publication date of this notice. *See* 19 CFR 351.224(b). Interested parties are invited to comment on the preliminary results. Interested parties may submit case briefs within 30 days of the date of publication of this notice. Rebuttal briefs, limited to issues raised in the case briefs, may be filed not later than 37 days after the date of publication. Parties who submit arguments are requested to submit with each argument: (1) a statement of the issue, (2) a brief summary of the argument and (3) a table of authorities. Further, we would appreciate it if parties submitting written comments would provide the Department with an additional copy of the public version of any such comments on a diskette. Any interested party may request a hearing within 30 days of publication. *See* 19 CFR 351.310(c). If requested, a hearing will be held 44 days after the publication of this notice, or the first workday thereafter. The Department will publish a notice of the final results of this administrative review, which will include the results of its analysis of issues raised in any such written comments or hearing, within 120 days from publication of this notice.

Assessment

Pursuant to 19 CFR 351.212(b), the Department calculated an assessment rate for each importer of subject merchandise. We have calculated each importer's duty assessment rate based on the ratio of the total amount of antidumping duties calculated for the examined sales to the total entered value of examined sales. Upon completion of this review, the Department will instruct the U.S. Customs Service to assess antidumping duties on all entries of subject merchandise by that importer, where the assessment rate is above *de minimis*.

Cash Deposit Requirements

The following deposit rates will be effective upon publication of the final results of this administrative review for all shipments of furfuryl alcohol from Thailand entered, or withdrawn from warehouse, for consumption on or after the publication date, as provided by section 751(a)(1) of the Act: (1) the cash deposit rate for Indorama will be the rate established in the final results of this review, except if the rate is less than 0.5 percent and, therefore, *de minimis*, the cash deposit will be zero; (2) for previously reviewed or investigated companies not listed above, the cash deposit rate will continue to be the company-specific rate published for the most recent period; (3) if the exporter is not a firm covered in this review, a prior review, or the less than fair value (LTFV) investigation, but the manufacturer is, the cash deposit rate will be the rate established for the most recent period for the manufacturer of the merchandise; and (4) if neither the exporter nor the manufacturer is a firm covered in this or any previous review or the LTFV investigation conducted by the Department, the cash deposit rate will be 7.82 percent, the ''all others'' rate established in the LTFV investigation.

These cash deposit requirements, when imposed, shall remain in effect until publication of the final results of the next administrative review.

This notice serves as a preliminary reminder to importers of their responsibility under 19 CFR 351.402(f)(2) to file a certificate regarding the reimbursement of antidumping duties prior to liquidation of the relevant entries during this review period. Failure to comply with this requirement could result in the Secretary's presumption that reimbursement of antidumping duties occurred and the subsequent assessment of double antidumping duties.

This determination is issued and published in accordance with sections 751(a)(1) and 777(i)(1) of the Act.

Dated: July 31, 2002.

Faryar Shirzad,

Assistant Secretary for Import Administration.

[FR Doc. 02–19985 Filed 8–6–02; 8:45 am]

BILLING CODE 3510–DS–S

DEPARTMENT OF COMMERCE

International Trade Administration

[A–507–502]

Certain In-Shell Raw Pistachios From Iran: Notice of Rescission of Antidumping Duty Administrative Review

AGENCY: Import Administration, International Trade Administration, Department of Commerce.

ACTION: Notice of Rescission of Antidumping Duty Administrative Review.

SUMMARY: On August 20, 2001, the Department of Commerce (the Department) published in the Federal Register (66 FR 43570) a notice announcing the initiation of an administrative review of the antidumping duty order on certain in-shell raw pistachios from Iran and

Rafsanjan Pistachio Producers Cooperative (RPPC). The review period is July 1, 2000 to June 30, 2001. This review has now been rescinded because there were no sales of subject merchandise by RPPC to the United States during the period of review.

EFFECTIVE DATE: August 7, 2002.

FOR FURTHER INFORMATION CONTACT: Phyllis Hall or Donna Kinsella, Enforcement Group III, Office 8, Import Administration, International Trade Administration, U.S. Department of Commerce, 14th Street and Constitution Avenue, N.W., Room 7866, Washington, D.C. 20230; telephone (202) 482–1398 or (202) 482–0194 respectively.

SUPPLEMENTARY INFORMATION:

The Applicable Statute

Unless otherwise indicated, all citations to the Tariff Act of 1930, as amended (the Act) are references to the provisions effective January 1, 1995, the effective date of the amendments made to the Act by the Uruguay Round Agreements Act (URAA). In addition, unless otherwise indicated, all citations to the Department's regulations are references to the provisions codified at 19 CFR Part 351 (2001).

Scope of Review

Imports covered by this review are raw, in-shell pistachio nuts from which the hulls have been removed, leaving the inner hard shells and edible meats, from Iran. The merchandise under review is currently classifiable under item 0802.50.20.00 of the *Harmonized Tariff Schedule of the United States* (HTSUS). Although the HTSUS subheadings are provided for convenience and customs purposes, our written description of the scope of this proceeding is dispositive.

Background

On July 11, 2001, Cyrus Marketing (Cyrus), a U.S. importer of subject merchandise, requested an administrative review of the antidumping duty order on Certain In-Shell Pistachios from Iran, published in the **Federal Register** on July 17, 1986 (51 FR 25922), and RPPC, an Iranian producer and exporter of pistachios. We initiated the review on August 20, 2001 (66 FR 43570). On September 28, 2001, January 8, 2002, February 7, 2002, March 6, 2002, and April 25, 2002 the Department issued standard and supplemental antidumping questionnaires. On November 15, 2001, December 4, 2000, February 4, 2002, March 20, 2002, and May 13, 2002, RPPC submitted responses to these questionnaires and a July 3, 2002, addendum. Additionally, on February 20, 2002, the Department orally requested information from RPPC. RPPC responded in writing on February 22, 2002.

Under section 751(a)(3)(A) of the Act, the Department may extend the deadline for issuing the preliminary results in an administrative review if it determines that it is not practicable to complete the preliminary results within the statutory time limit of 245 days. On April 4, 2002, the Department published a notice of extension of the time limit for the completion of the preliminary results by 120 days, until July 31, 2002. *See Administrative Review of Certain In-Shell Raw Pistachios From Iran: Extension of Time Limit for Preliminary Results of Antidumping Duty Administrative Review*, 67 FR 16088 (April 4, 2002).

On June 11, 2002, the Department issued a memorandum indicating its intent to rescind the administrative review covering RPPC and invited interested parties to submit comments on its intent to rescind no later than June 25, 2002. See Decision Memorandum from Phyllis Hall, Case Analyst through Donna Kinsella, Case Manager and Richard Weible, Director, Office 8 to Joseph Spetrini, Deputy Assistant Secretary dated June 10, 2002. On June 24, 2002, the Department received joint comments from Cyrus and RPPC. No other interested party comments were received. On July 23, 2002, Cyrus submitted additional information that the Department rejected as untimely. See Letter from Phyllis Hall to Ed Borcherdt dated July 30, 2002.

Analysis of Comments Received

Pursuant to 19 CFR 351.213(d)(3), the Department may rescind an administrative review, in whole or only with respect to a particular exporter or producer, if the Department concludes that, during the period covered by the review, there were no entries, exports or sales of the subject merchandise. In light of the fact that we have determined that the only company covered by the review did not have entries for consumption into the territory of the United States during the POR in question, we find that rescinding this review is appropriate. For a complete discussion see ''Decision to Rescind the Antidumping Duty Administrative Review of Certain In-Shell Raw Pistachios from Iran Memorandum'' from Donna Kinsella, Case Manager and Richard Weible, Director Office 8 through Joseph A. Spetrini, Deputy Assistant Secretary, Import Administration to Faryar Shirzad, Assistant Secretary for Import Administration dated July 31, 2002. The cash-deposit rate for RPPC will remain at 184.28 percent, the rate established in the most recently completed segment of this proceeding, adjusted for export subsidies. *See Certain In-Shell Pistachios: Final Determination of Sales at Less Than Fair Value*, 51 FR 18919, May 23, 1986.

This notice is in accordance with section 777(i) of the Act and 19 CFR 351.213(d)(4).

Dated: July 31, 2002.

Faryar Shirzad,

Assistant Secretary for Import Administration.

[FR Doc. 02–19991 Filed 8–6–02; 8:45 am]

BILLING CODE 3510–DS–S

DEPARTMENT OF COMMERCE

International Trade Administration

[A–489–805]

Certain Pasta from Turkey: Notice of Preliminary Results of Antidumping Duty Administrative Review and Notice of Intent Not To Revoke Order in Part

AGENCY: Import Administration, International Trade Administration, Department of Commerce.

ACTION: Notice of Preliminary Results of Antidumping Duty Administrative Review and Notice of Intent Not To Revoke Order in Part.

SUMMARY: In response to a request by one producer/exporter of the subject merchandise, the Department of Commerce (the Department) is conducting an administrative review of the antidumping duty order on certain pasta (pasta) from Turkey for the period July 1, 2000 through June 30, 2001.

We preliminarily determine that during the period of review (POR), Filiz Gida Sanayi ve Ticaret A.S. (Filiz) sold subject merchandise at less than normal value (NV). If these preliminary results are adopted in the final results of this administrative review, we will instruct the U.S. Customs Service to assess antidumping duties based on the difference between the export price (EP) and NV. In addition, we are not revoking the antidumping order with respect to Filiz, because it has not had zero or *de minimis* dumping margins for three consecutive reviews and has not had three years of sales in commercial quantities at not less than NV. See *Intent Not To Revoke* section of this notice.

Interested parties are invited to comment on these preliminary results. Parties who submit comments in this proceeding should also submit with

them: (1) A statement of the issues; (2) a brief summary of their comments; and (3) a table of authorities. Further, we would appreciate it if parties submitting written comments would provide the Department with an additional copy of the public version of any such comments on diskette.

EFFECTIVE DATE: August 7, 2002.

FOR FURTHER INFORMATION CONTACT: Lyman Armstrong or Cindy Robinson, AD/CVD Enforcement, Office 6, Group II, Import Administration, International Trade Administration, U.S. Department of Commerce, 14th Street and Constitution Avenue, NW, Washington, DC 20230; telephone: (202) 482–3601 or (202) 482–3797, respectively.

SUPPLEMENTARY INFORMATION:

The Applicable Statute and Regulations:

Unless otherwise indicated, all citations to the statute are references to the provisions effective January 1, 1995, the effective date of the amendments made to the Tariff Act of 1930 (the Act) by the Uruguay Round Agreements Act (URAA). In addition, unless otherwise indicated, all citations to Department regulations refer to the regulations codified at 19 CFR Part 351 (April 2001).

Case History

On July 24, 1996, the Department published in the **Federal Register** the antidumping duty order on pasta from Turkey (61 FR 38545). On July 2, 2001, we published in the **Federal Register** the notice of ''Opportunity to Request Administrative Review'' of this order, for the period July 1, 2000, through June 30, 2001 (66 FR 34910).

On July 31, 2001, we received a request for review from Filiz, a Turkish exporter/producer of pasta, in accordance with 19 CFR 351.213(b)(2). In addition, on July 31, 2001, Filiz submitted a letter to the Department requesting, pursuant to 19 CFR 351.222(b), revocation of the antidumping duty order with respect to its sales of the subject merchandise. On August 20, 2001, we published the notice of initiation of this antidumping duty administrative review covering the period July 1, 2000 through June 30, 2001, for Filiz. *See Notice of Initiation*, 66 FR 43570 (August 20, 2001).

On August 28, 2001, we sent the antidumping duty questionnaires to Filiz. For Filiz, the Department disregarded sales that failed the cost test during the most recently completed segment of the proceeding in which this company participated.[1] Therefore, pursuant to section 773(b)(2)(A)(ii) of the Act, we had reasonable grounds to believe or suspect that sales by this company of the foreign like product under consideration for the determination of NV in this review were made at prices below the cost of production (COP). Thus, we initiated a cost investigation of Filiz at the time we initiated the antidumping review.

Filiz submitted its sections A through D questionnaire responses on October 25, 2001. The Department issued a supplemental sections A through D questionnaire to Filiz on February 6, 2002. Filiz submitted its response to our supplemental questionnaire on March 4, 2002.

On March 12, 2002, the Department published a notice postponing the preliminary results of this review until July 30, 2002.[2] *See Certain Pasta from Italy and Turkey: Extension of Preliminary Results of Antidumping Duty Administrative Reviews*, 67 FR 11095 (March 12, 2002).

We verified the sales and cost information submitted by Filiz from March 20 through March 29, 2002. On May 7, 2002, petitioners submitted comments requesting that the Department not revoke the antidumping duty order with respect to Filiz. On May 8, 2002 Filiz submitted rebuttal comments regarding revocation with respect to its sales of subject merchandise.

Scope of Review

Imports covered by this review are shipments of certain non-egg dry pasta in packages of five pounds (2.27 kilograms) or less, whether or not enriched or fortified or containing milk or other optional ingredients such as chopped vegetables, vegetable purees, milk, gluten, diastases, vitamins, coloring and flavorings, and up to two percent egg white. The pasta covered by this scope is typically sold in the retail market, in fiberboard or cardboard cartons, or polyethylene or polypropylene bags of varying dimensions.

Excluded from the scope of this review are refrigerated, frozen, or canned pastas, as well as all forms of egg pasta, with the exception of non-egg dry pasta containing up to two percent egg white.

The merchandise subject to review is currently classifiable under item 1902.19.20 of the *Harmonized Tariff Schedule of the United States* (*HTSUS*). Although the *HTSUS* subheading is provided for convenience and Customs purposes, the written description of the merchandise subject to the order is dispositive.

Scope Rulings

The Department has issued the following scope ruling to date:

(1) On October 26, 1998, the Department self-initiated a scope inquiry to determine whether a package weighing over five pounds as a result of allowable industry tolerances is within the scope of the antidumping and countervailing duty orders. On May 24, 1999 we issued a final scope ruling finding that, effective October 26, 1998, pasta in packages weighing or labeled up to (and including) five pounds four ounces is within the scope of the antidumping and countervailing duty orders. *See* ''Memorandum from John Brinkmann to Richard Moreland,'' dated May 24, 1999, in the case file in the Central Records Unit, main Commerce building, room B–099 (the CRU).

Verification

As provided in section 782(i) of the Act, we verified the cost and sales information provided by Filiz. We used standard verification procedures, including on-site inspection of the manufacturer's facilities and examination of relevant sales and financial records. Our verification results are outlined in a verification report placed in the case file in the CRU. We revised certain sales and cost data based on verification findings, *see*, *Filiz's Preliminary Calculation Memorandum (Preliminary Calculation Memorandum*) (July 31, 2002) and *Verification of the Sales Questionnaire of Filiz* (July 22, 2002) on file in the CRU.

Product Comparisons

In accordance with section 771(16) of the Act, the Department first attempted to match contemporaneous sales of products sold in the U.S. and comparison markets that were identical with respect to the following characteristics: (1) Pasta shape; (2) type of wheat; (3) additives; and (4) enrichment. Where there were no sales of identical merchandise in the home market to compare with U.S. sales, we compared U.S. sales with the most similar product based on the characteristics listed above, in descending order of priority.

[1] The fourth administrative review covering the period July 1, 1999, through June 30, 2000, was the most recently completed review for Filiz. *See Certain Pasta From Turkey: Final Results of Antidumping Duty Administrative Review and Determination Not To Revoke the Antidumping Duty Order in Part*, 67 FR 298 (January 3, 2002).

[2] There was a typographical error in the notice of ''Extension of Preliminary Results of Antidumping Duty Administrative Reviews''; the preliminary results of this review are actually due on July 31, 2002.

For purposes of the preliminary results, where appropriate, we have calculated the adjustment for differences in merchandise based on the difference in the variable cost of manufacturing between each U.S. model and the most similar home market model selected for comparison.

Comparisons to Normal Value

To determine whether sales of certain pasta from Turkey were made in the United States at less than fair value, we compared the export price (EP) to the normal value (NV), as described in the *Export Price* and *Normal Value* sections of this notice. Because Turkey's economy experienced high inflation during the POR (over 60 percent), as is Department practice, we limited our comparisons to home market sales made during the same month in which the U.S. sale occurred and did not apply our 90/60 contemporaneity rule. *See*, *e.g.*, *Notice of Final Results and Partial Rescission of Antidumping Duty Administrative Review: Certain Pasta From Turkey*, 63 FR 68429, 68430 (December 11, 1998) and *Certain Porcelain on Steel Cookware from Mexico: Final Results of Antidumping Duty Administrative Review*, 62 FR 42496, 42503 (August 7, 1997). This methodology minimizes the extent to which calculated dumping margins are overstated or understated due solely to price inflation that occurred in the intervening time period between the U.S. and home market sales.

Export Price

For the price to the United States, we used EP in accordance with section 772(a) of the Act because the merchandise was sold by the producer or exporter outside the United States to the first unaffiliated purchaser in the United States prior to importation and constructed export price was not otherwise warranted based on the facts on the record. We based EP on the packed C&F prices to the first unaffiliated customer in the United States.

In accordance with section 772(c)(2) of the Act, we made deductions, where appropriate, for movement expenses including inland freight from plant or warehouse to port of exportation, foreign brokerage handling and loading charges, and international freight. In addition, we increased the EP by the amount of the countervailing duties paid that were attributable to an export subsidy, in accordance with section 772(c)(1)(C).

Normal Value

A. Selection of Comparison Markets

In order to determine whether there was a sufficient volume of sales in the home market to serve as a viable basis for calculating NV, we compared Filiz's volume of home market sales of the foreign like product to the volume of its U.S. sales of the subject merchandise. Pursuant to section 773(a)(1)(B) of the Act, because Filiz's aggregate volume of home market sales of the foreign like product was greater than five percent of its aggregate volume of U.S. sales of the subject merchandise, we determined that the home market was viable for Filiz.

B. Arm's Length Test

Sales to affiliated customers for consumption in the home market which were determined not to be at arm's length were excluded from our analysis. To test whether these sales were made at arm's length, we compared the prices of sales of comparison products to affiliated and unaffiliated customers, net of all movement charges, direct selling expenses, discounts, rebates, and packing. Pursuant to 19 CFR 351.403(c) and in accordance with our practice, where the prices to the affiliated party were on average less than 99.5 percent of the prices to unaffiliated parties, we determined that the sales made to the affiliated party were not at arm's length. *See*, *e.g.*, *Notice of Final Results and Partial Rescission of Antidumping Duty Administrative Review: Roller Chain, Other Than Bicycle, From Japan*, 62 FR 60472, 60478 (November 10, 1997), and *Antidumping Duties; Countervailing Duties: Final Rule* (*Antidumping Duties*), 62 FR 27295, 27355–56 (May 19, 1997). We included in our NV calculations those sales to affiliated customers that passed the arm's-length test in our analysis. *See* 19 CFR 351.403; *Antidumping Duties*, 62 FR at 27355–56.

C. Cost of Production Analysis

1. Calculation of COP

Before making any comparisons to NV, we conducted a COP analysis, pursuant to section 773(b) of the Act, to determine whether the respondent's comparison market sales were made below the COP. We calculated the COP based on the sum of the cost of materials and fabrication for the foreign like product, plus amounts for selling, general, and administrative (SG&A) expenses and packing, in accordance with section 773(b)(3) of the Act. We relied on the respondent's information as submitted, except in instances where we used revised data based on verification findings. *See* the *Preliminary Calculation Memorandum* on file in the CRU, for a description of any changes that we made.

As noted above, we determined that the Turkish economy experienced high inflation during the POR. Therefore, to avoid the distortive effect of inflation on our comparison of costs and prices, we requested that the respondent submit the product-specific cost of manufacturing (COM) incurred during each month of the period for which it reported home market sales. We then calculated an average COM for each product after indexing the reported monthly costs to an equivalent currency level using the Turkish wholesale price index from the *International Financial Statistics* published by the International Monetary Fund (IMF). We then restated the average COM in the currency value of each respective month.

2. Test of Comparison Market Prices

As required under section 773(b) of the Act, for Filiz, we compared the weighted-average COP to the weighted-average per unit price of the comparison market sales of the foreign like product, to determine whether Filiz's sales had been made at prices below the COP within an extended period of time in substantial quantities. For Filiz, we determined the net comparison market prices for the below-cost test by subtracting from the gross unit price any applicable movement charges, discounts, rebates, direct and indirect selling expenses (also subtracted from the COP), and packing expenses. We added interest revenue.

3. Results of COP Test

Pursuant to section 773(b)(2)(C) of the Act, where less than 20 percent of sales of a given product were at prices less than the COP, we did not disregard any below-cost sales of that product because we determined that the below-cost sales were not made in ''substantial quantities.'' Where 20 percent or more of Filiz's sales of a given product during the twelve-month period were at prices less than the COP, we determined such sales to have been made in ''substantial quantities'' within an extended period of time in accordance with section 773(b)(2)(B) and (C) of the Act. In such cases, because we compared prices to POR-average costs (indexed for inflation), we also determined that such sales were not made at prices which would permit recovery of all costs within a reasonable period of time, in accordance with section 773(b)(2)(D) of the Act. Therefore, for purposes of this administrative review, for Filiz we

disregarded the below-cost sales and used the remaining sales as the basis for determining NV, in accordance with section 773(b)(1) of the Act.

D. Calculation of Normal Value Based on Comparison Market Prices

We calculated NV based on ex-factory or delivered prices to comparison market customers. We made deductions from the starting price for inland freight, warehousing, inland insurance, discounts, and rebates. In accordance with sections 773(a)(6)(A) and (B) of the Act, we added U.S. packing costs and deducted comparison market packing costs, respectively. In addition, we made circumstance of sale adjustments for direct expenses, including imputed credit, advertising, promotions, and warranties, in accordance with section 773(a)(6)(C)(iii) of the Act.

When comparing U.S. sales with comparison market sales of similar, but not identical, merchandise, we also made adjustments for physical differences in the merchandise in accordance with section 773(a)(6)(C)(ii) of the Act. Pursuant to section 351.411 of the Department's regulations, we based this adjustment on the difference in the variable COM for the foreign like product and subject merchandise, using twelve-month average costs, as adjusted for inflation for each month of the twelve-month period, as described in the *Cost of Production Analysis* section above.

E. Level of Trade (LOT)

In accordance with section 773(a)(1)(B) of the Act, we determined NV based on sales in the comparison market at the same LOT as the U.S. EP sales, to the extent practicable. When there are no sales at the same LOT, we compare U.S. sales to comparison market sales at a different LOT.

Pursuant to section 351.412 of the Department's regulations, to determine whether comparison market sales are at a different LOT, we examine stages in the marketing process and selling functions along the chain of distribution between the producer and the unaffiliated (or arm's length) customers. If the comparison-market sales are at a different LOT and the differences affect price comparability, as manifested in a pattern of consistent price differences between the sales on which NV is based and comparison-market sales at the LOT of the export transaction, we make an a LOT adjustment under section 773(a)(7)(A) of the Act.

For Filiz, all EP sales were compared to home market sales at the same LOT. Therefore, no LOT adjustment was necessary.

For a detailed description of our LOT methodology and a summary of company-specific LOT findings for these preliminary results, *see*, *Preliminary Calculation Memorandum* on file in the CRU.

Intent Not To Revoke

On July 31 2001, Filiz submitted a letter to the Department requesting, pursuant to 19 CFR 351.222(b), revocation of the antidumping duty order with respect to its sales of the subject merchandise.

The Department ''may revoke, in whole or in part'' an antidumping duty order upon completion of a review under section 751 of the Act. While Congress has not specified the procedures that the Department must follow in revoking an order, the Department has developed a procedure for revocation that is described in 19 CFR 351.222. This regulation requires, *inter alia*, that one or more exporters and producers covered by the order submit the following: (1) A certification that the company has sold the subject merchandise at not less than NV in the current review period and that the company will not sell at less than NV in the future; (2) a certification that the company sold the subject merchandise in each of the three years forming the basis of the request in commercial quantities; and (3) an agreement to immediate reinstatement of the order if the Department concludes that the company, subsequent to the revocation, has sold subject merchandise at less than NV. *See* 19 CFR 351.222(e)(1). Upon receipt of such a request, the Department will consider the following in determining whether to revoke the order in part: (1) Whether the producer or exporter requesting revocation has sold subject merchandise at not less than NV for a period of at least three consecutive years; (2) whether continued application of the AD order is otherwise necessary to offset dumping; and (3) whether the producer or exporter requesting revocation in part has agreed in writing to the immediate reinstatement of the order, as long as any exporter or producer is subject to the order, if the Department concludes that the exporter or producer, subsequent to revocation, sold the subject merchandise at less than NV. *See* 19 CFR. 351.222(b)(2).

In accordance with 19 CFR 351.222(e), Filiz's request was accompanied by certifications from Filiz that it had not sold the subject merchandise at less than NV for a three-year period including this review period, and would not do so in the future. In addition, Filiz stated that it had sold subject merchandise in commercial quantities during this time. Filiz also agreed to immediate reinstatement in the relevant antidumping order, as long as any firm is subject to the order, if the Department concludes under 19 CFR 351.216 that, subsequent to revocation, Filiz sold the subject merchandise at less than NV. The Department conducted verifications of Filiz's responses for this period of review.

In the two prior reviews of this order we determined that Filiz sold pasta from Turkey at not less than NV or at *de minimis* margins. We have preliminarily determined that Filiz sold pasta products at less than NV during the instant review period. However, in determining whether a requesting party is entitled to revocation, the Department must be able to determine that the company has continued to participate meaningfully in the U.S. market during each of the three years at issue. *See*, *e.g.*, *Notice of Preliminary Results of Antidumping Administrative Review and Intent Not To Revoke Order in Part: Pure Magnesium from Canada* (*Pure Magnesium from Canada*), 63 FR 26147 (May 12, 1998) and *Notice of Preliminary Results of Antidumping Administrative Review and Intent Not To Revoke Order in Part: Certain Cold-Rolled and Corrosion-Resistant Carbon Steel Flat Products From the Republic of Korea* 65 FR 54197 (September 7, 2000).

This practice has been codified in 19 CFR 351.222(e), which states that a party requesting a revocation review is required to certify that it has sold the subject merchandise in commercial quantities during the periods forming the basis of the revocation request. *See also*, Section 351.222(d)(1) of the Department's regulations, which states that, ''before revoking an order or terminating a suspended investigation, the Secretary must be satisfied that, during each of the three (or five) years, there were exports to the United States in commercial quantities of the subject merchandise to which a revocation or termination will apply.''; *see also*, the preamble of the Department's latest revision of the revocation regulation stating: ''The threshold requirement for revocation continues to be that respondent not sell at less than normal value for at least three consecutive years and that, during those years, respondent exported subject merchandise to the United States in commercial quantities'' *Amended Regulation Concerning the Revocation of Antidumping and Countervailing Duty Orders*, 64 FR 51236, 51237 (September 22, 1999). For purposes of revocation, the Department must be able to determine that past

margins reflect a company's normal commercial activity. Sales during the POR which, in the aggregate, are an abnormally small quantity do not provide a reasonable basis for determining that the discipline of the order is no longer necessary to offset dumping. As the Department has previously stated, the commercial quantities requirement is a threshold matter. *See e.g.*, *Pure Magnesium from Canada*, 64 FR 50489, 50490 (September 17, 1999). Thus, a party must have meaningfully participated in the marketplace in order to substantiate the need for further inquiry regarding whether continued imposition of the order is warranted.

Based on the current record, we find that Filiz did not sell merchandise in the United States in commercial quantities during the three consecutive reviews cited by Filiz to support its request for revocation. During the current POR (July 2000 through June 2001), Filiz made only one sale in the United States. Moreover, the total tonnage of this sale was small. By contrast, during the period covered by the antidumping investigation (May 1994 through April 1995), Filiz made numerous sales in the United States whose total quantity is 400 times greater than the quantity Filiz sold in the United States during the fifth administrative review period (the current review period). *See Verification of the Sales Questionnaire of Filiz* at exhibit 20. In other words, Filiz's sales for the entire year covered by the fifth review period were only 0.22 percent of its sales volume during the twelve-months covered by the investigation. Similarly, during the third and fourth administrative reviews, Filiz made only one sale during each of these respective reviews. *See Verification of the Sales Questionnaire of Filiz* at exhibit 20. Even, if Filiz receives a *de minimis* margin during the review at issue, this margin is not based on commercial quantities within the meaning of the revocation regulation. The number of sales and total sales volume is so small, both in absolute terms, and in comparison with the period of investigation and other review periods, that it does not provide any meaningful information about Filiz's normal commercial experience without the discipline of the antidumping duty order. *See*, *Preliminary Calculation Memorandum*. Therefore, we find that Filiz did not meaningfully participate in the marketplace, and thus, because it has not sold the subject merchandise for three years in commercial quantities within the meaning of 19 CFR 351.222(e), does not qualify for revocation.

Because the requirements under the regulations have not been satisfied, if these preliminary findings are affirmed in our final results, we do not intend to revoke the antidumping duty order with respect to merchandise produced and exported by Filiz.

Currency Conversion

Because this proceeding involves a high-inflation economy, we limited our comparison of U.S. and home market sales to those occurring in the same month (as described above) and only used daily exchange rates. *See Notice of Final Results and Partial Rescission of Antidumping Duty Administrative Review: Certain Pasta From Turkey*, 63 FR 68429 (December 11, 1998).

The Department's preferred source for daily exchange rates is the Federal Reserve Bank. However, the Federal Reserve Bank does not track or publish exchange rates for the Turkish Lira. Therefore, we made currency conversions based on the daily exchange rates from the Dow Jones Service, as published in the *Wall Street Journal*.

Preliminary Results of Review

As a result of our review, we preliminarily determine that the following percentage weighted-average margin exists for the period July 1, 2000 through June 30, 2001:

Manufacturer/exporter	Margin (percent)
Filiz	16.06

The Department will disclose the calculations performed within five days of the date of publication of this notice to the parties of this proceeding in accordance with 19 CFR 351.224(b). An interested party may request a hearing within 30 days of publication of these preliminary results. *See* 19 CFR 351.310(c). Any hearing, if requested, will be held 44 days after the date of publication, or the first working day thereafter. Interested parties may submit case briefs no later than 30 days after the date of publication of these preliminary results of review. Rebuttal briefs, limited to issues raised in such briefs, may be filed no later than 37 days after the date of publication. Parties who submit arguments are requested to submit with the argument (1) a statement of the issue, (2) a brief summary of the argument and (3) a table of authorities. Further, we would appreciate it if parties submitting written comments would provide the Department with an additional copy of the public version of any such comments on diskette. The Department will issue the final results of this administrative review, which will include the results of its analysis of issues raised in any such comments, or at a hearing, if requested, within 120 days of publication of these preliminary results.

Assessment Rate

Pursuant to 19 CFR 351.212(b), the Department calculated an assessment rate for each importer of the subject merchandise. Upon issuance of the final results of this administrative review, if any importer-specific assessment rates calculated in the final results are above *de minimis* (*i.e.*, at or above 0.5 percent) the Department will issue appraisement instructions directly to the U.S. Customs Service to assess antidumping duties on appropriate entries by applying the assessment rate to the entered value of the merchandise. For assessment purposes, we calculated importer-specific assessment rates for the subject merchandise by aggregating the dumping margins for all U.S. sales to each importer and dividing the amount by the total entered value of the sales to that importer.

Cash Deposit Requirements

To calculate the cash-deposit rates for each producer and/or exporter included in this administrative review, we divided the total dumping margins for each company by the total net value for that company's sales during the review period.

The following deposit rates will be effective upon publication of the final results of this administrative review for all shipments of certain pasta from Turkey entered, or withdrawn from warehouse, for consumption on or after the publication date, as provided by section 751(a)(2)(C) of the Act: (1) The cash deposit rate for the company listed above will be the rate established in the final results of this review except if the rate is less than 0.5 percent and, therefore, *de minimis*, the cash deposit will be zero; (2) for previously reviewed or investigated companies, the cash deposit rate will continue to be the company-specific rate published for the most recent final results in which that manufacturer or exporter participated; (3) if the exporter is not a firm covered in this review, a prior review, or the original less-than-fair-value (LTFV) investigation, but the manufacturer is, the cash deposit rate will be the rate established for the most recent final results for the manufacturer of the merchandise; and (4) if neither the exporter nor the manufacturer is a firm

covered in this or any previous review conducted by the Department, the cash deposit rate will be 51.49 percent, the ''All Others'' rate established in the LTFV investigation. *See Notice of Antidumping Duty Order and Amended Final Determination of Sales at Less Than Fair Value: Certain Pasta from Turkey*, 61 FR 38546 (July 24, 1996).

These cash deposit requirements, when imposed, shall remain in effect until publication of the final results of the next administrative review.

Notification to Importers

This notice serves as a preliminary reminder to importers of their responsibility under 19 CFR 351.402(f) to file a certificate regarding the reimbursement of antidumping duties prior to liquidation of the relevant entries during this review period. Failure to comply with this requirement could result in the Secretary's presumption that reimbursement of antidumping duties occurred and the subsequent assessment of double antidumping duties.

This administrative review is issued and published in accordance with sections 751(a)(1) and 777(i)(1) of the Act.

Dated: July 31, 2002.

Faryar Shirzad,

Assistant Secretary for Import Administration.

[FR Doc. 02–19986 Filed 8–6–02; 8:45 am]

BILLING CODE 3510–DS–S

DEPARTMENT OF COMMERCE

International Trade Administration

[A-428-825]

Stainless Steel Sheet and Strip in Coils From Germany; Notice of Preliminary Results of Antidumping Duty Administrative Review

AGENCY: Import Administration, International Trade Administration, Department of Commerce.

ACTION: Notice of Preliminary Results of Antidumping Duty Administrative Review.

EFFECTIVE DATE: August 7, 2002.

SUMMARY: In response to a request from Allegheny Ludlum, AK Steel Corporation, Butler Armco Independent Union, J&L Specialty Steel, Inc., North American Stainless, United Steelworkers of America, AFL-CIO/CLC, and Zanesville Armco Independent Organization (collectively, petitioners) and respondent Krupp Thyssen Nirosta GmbH (KTN) and Krupp Hoesch Steel Products, Inc. (KHSP), Krupp Thyssen Nirosta North America, Inc. (KTNNA), Krupp VDM GmbH (VDM), and Krupp VDM Technologies Corporation (VDMT) (collectively, KTN), the Department of Commerce (the Department) is conducting an administrative review of the antidumping duty order on stainless steel sheet and strip in coils (S4) from Germany. The review covers one manufacturer/exporter of the subject merchandise to the United States during the period July 1, 2000 through June 30, 2001.

We preliminarily determine that there are sales at less than normal value by KTN during the period July 1, 2000 through June 30, 2001. If these preliminary results are adopted in our final results of review, we will instruct the U.S. Customs Service to assess antidumping duties based on the difference between the United States Price (USP) and normal value (NV).

Interested parties are invited to comment on these preliminary results. Parties who submit arguments in this proceeding are requested to submit with the arguments: (1) a statement of the issues and (2) a brief summary of the arguments (no longer than five pages, including footnotes).

FOR FURTHER INFORMATION CONTACT: Patricia Tran, Michael Heaney, or Robert James at (202) 482-1121, (202) 482-4475, or (202) 482-0649, respectively, Antidumping and Countervailing Duty Enforcement Group III, Import Administration, International Trade Administration, U.S. Department of Commerce, 14th Street and Constitution Avenue, NW, Washington, DC 20230.

SUPPLEMENTARY INFORMATION:

Applicable Statute and Regulations:

Unless otherwise indicated, all citations to the Tariff Act of 1930, as amended (the Tariff Act), are references to the provisions effective January 1, 1995, the effective date of the amendments made to the Tariff Act by the Uruguay Round Agreements Act (URAA). In addition, unless otherwise indicated, all citations to the Department's regulations are to the regulations codified at 19 CFR Part 351 (2002).

Background

The Department published an antidumping duty order on S4 from Germany on July 27, 1999. *See Notice of Amended Final Determination of Sales at Less than Fair Value and Antidumping Duty Order; Stainless Steel Sheet and Strip in Coils from Germany (Antidumping Duty Order)*, 64 FR 40557 (July 27, 1999). On July 2, 2001, the Department published the *Notice of Opportunity to Request Administrative Review*of stainless steel sheet and strip in coils from Germany for the period July 1, 2000 through June 30, 2001 (66 FR 34910), as corrected, July 24, 2001 (66 FR 38455).

On July 31, 2001, petitioners and KTN requested an administrative review of KTN's sales for the period July 1, 2000 through June 30, 2001. On August 20, 2001, we published in the Federal Register a notice of initiation of this antidumping duty administrative review covering the period July 1, 2000 through June 30, 2001. *See Notice of Initiation of Antidumping and Countervailing Duty Administrative Reviews and Requests for Revocation in Part*, 66 FR 43570 (August 20, 2001).

Because it was not practicable to complete this review within the normal time frame, on February 25, 2002, we published in the **Federal Register** our notice of the extension of time limits for the this review. *See Stainless Steel Sheet and Strips in Coils from Germany; Antidumping Duty Administrative Review; Time Limits; Notice of Extension of Time Limits*, 67 FR 8524 (February 25, 2002). This extension established the deadline for these preliminary results as July 31, 2002.

Scope of the Review

For purposes of this order, the products covered are certain stainless steel sheet and strip in coils. Stainless steel is an alloy steel containing, by weight, 1.2 percent or less of carbon and 10.5 percent or more of chromium, with or without other elements. The subject sheet and strip is a flat-rolled product in coils that is greater than 9.5 mm in width and less than 4.75 mm in thickness, and that is annealed or otherwise heat treated and pickled or otherwise descaled. The subject sheet and strip may also be further processed (*e.g.*, cold-rolled, polished, aluminized, coated, *etc.*) provided that it maintains the specific dimensions of sheet and strip following such processing.

The merchandise subject to this order is classified in the *Harmonized Tariff Schedule of the United States* (HTS) at subheadings: 7219.13.00.31, 7219.13.00.51, 7219.13.00.71, 7219.13.00.81, 7219.14.00.30, 7219.14.00.65, 7219.14.00.90, 7219.32.00.05, 7219.32.00.20, 7219.32.00.25, 7219.32.00.35, 7219.32.00.36, 7219.32.00.38, 7219.32.00.42, 7219.32.00.44, 7219.33.00.05, 7219.33.00.20, 7219.33.00.25, 7219.33.00.35, 7219.33.00.36, 7219.33.00.38, 7219.33.00.42, 7219.33.00.44,

7219.34.00.05, 7219.34.00.20, 7219.34.00.25, 7219.34.00.30, 7219.34.00.35, 7219.35.00.05, 7219.35.00.15, 7219.35.00.30, 7219.35.00.35, 7219.90.00.10, 7219.90.00.20, 7219.90.00.25, 7219.90.00.60, 7219.90.00.80, 7220.12.10.00, 7220.12.50.00, 7220.20.10.10, 7220.20.10.15, 7220.20.10.60, 7220.20.10.80, 7220.20.60.05, 7220.20.60.10, 7220.20.60.15, 7220.20.60.60, 7220.20.60.80, 7220.20.70.05, 7220.20.70.10, 7220.20.70.15, 7220.20.70.60, 7220.20.70.80, 7220.20.80.00, 7220.20.90.30, 7220.20.90.60, 7220.90.00.10, 7220.90.00.15, 7220.90.00.60, and 7220.90.00.80. Although the HTS subheadings are provided for convenience and Customs purposes, the Department's written description of the merchandise under review is dispositive.

Excluded from the scope of this order are the following: (1) Sheet and strip that is not annealed or otherwise heat treated and pickled or otherwise descaled; (2) sheet and strip that is cut to length; (3) plate (*i.e.*, flat-rolled stainless steel products of a thickness of 4.75 mm or more); (4) flat wire (*i.e.*, cold-rolled sections, with a prepared edge, rectangular in shape, of a width of not more than 9.5 mm); and (5) razor blade steel. Razor blade steel is a flat-rolled product of stainless steel, not further worked than cold-rolled (cold-reduced), in coils, of a width of not more than 23 mm and a thickness of 0.266 mm or less, containing, by weight, 12.5 to 14.5 percent chromium, and certified at the time of entry to be used in the manufacture of razor blades. *See* Chapter 72 of the HTSUS, ''Additional U.S. Note''1(d).

In response to comments by interested parties, the Department has determined that certain specialty stainless steel products are also excluded from the scope of this order. These excluded products are described below.

Flapper valve steel is defined as stainless steel strip in coils containing, by weight, between 0.37 and 0.43 percent carbon, between 1.15 and 1.35 percent molybdenum, and between 0.20 and 0.80 percent manganese. This steel also contains, by weight, phosphorus of 0.025 percent or less, silicon of between 0.20 and 0.50 percent, and sulfur of 0.020 percent or less. The product is manufactured by means of vacuum arc remelting, with inclusion controls for sulphide of no more than 0.04 percent and for oxide of no more than 0.05 percent. Flapper valve steel has a tensile strength of between 210 and 300 ksi, yield strength of between 170 and 270 ksi, plus or minus 8 ksi, and a hardness (Hv) of between 460 and 590. Flapper valve steel is most commonly used to produce specialty flapper valves for compressors.

Also excluded is a product referred to as suspension foil, a specialty steel product used in the manufacture of suspension assemblies for computer disk drives. Suspension foil is described as 302/304 grade or 202 grade stainless steel of a thickness between 14 and 127 microns, with a thickness tolerance of plus-or-minus 2.01 microns, and surface glossiness of 200 to 700 percent Gs. Suspension foil must be supplied in coil widths of not more than 407 mm, and with a mass of 225 kg or less. Roll marks may only be visible on one side, with no scratches of measurable depth. The material must exhibit residual stresses of 2 mm maximum deflection, and flatness of 1.6 mm over 685 mm length.

Certain stainless steel foil for automotive catalytic converters is also excluded from the scope of this order. This stainless steel strip in coils is a specialty foil with a thickness of between 20 and 110 microns used to produce a metallic substrate with a honeycomb structure for use in automotive catalytic converters. The steel contains, by weight, carbon of no more than 0.030 percent, silicon of no more than 1.0 percent, manganese of no more than 1.0 percent, chromium of between 19 and 22 percent, aluminum of no less than 5.0 percent, phosphorus of no more than 0.045 percent, sulfur of no more than 0.03 percent, lanthanum of between 0.002 and 0.05 percent, and total rare earth elements of more than 0.06 percent, with the balance iron.

Permanent magnet iron-chromium-cobalt alloy stainless strip is also excluded from the scope of this order. This ductile stainless steel strip contains, by weight, 26 to 30 percent chromium, and 7 to 10 percent cobalt, with the remainder of iron, in widths 228.6 mm or less, and a thickness between 0.127 and 1.270 mm. It exhibits magnetic remanence between 9,000 and 12,000 gauss, and a coercivity of between 50 and 300 oersteds. This product is most commonly used in electronic sensors and is currently available under proprietary trade names such as ''Arnokrome III.''[1]

Certain electrical resistance alloy steel is also excluded from the scope of this order. This product is defined as a non-magnetic stainless steel manufactured to American Society of Testing and Materials (ASTM) specification B344 and containing, by weight, 36 percent nickel, 18 percent chromium, and 46 percent iron, and is most notable for its resistance to high temperature corrosion. It has a melting point of 1390 degrees Celsius and displays a creep rupture limit of 4 kilograms per square millimeter at 1000 degrees Celsius. This steel is most commonly used in the production of heating ribbons for circuit breakers and industrial furnaces, and in rheostats for railway locomotives. The product is currently available under proprietary trade names such as ''Gilphy 36.''[2]

Certain martensitic precipitation-hardenable stainless steel is also excluded from the scope of this order. This high-strength, ductile stainless steel product is designated under the Unified Numbering System (UNS) as S45500-grade steel, and contains, by weight, 11 to 13 percent chromium, and 7 to 10 percent nickel. Carbon, manganese, silicon and molybdenum each comprise, by weight, 0.05 percent or less, with phosphorus and sulfur each comprising, by weight, 0.03 percent or less. This steel has copper, niobium, and titanium added to achieve aging, and will exhibit yield strengths as high as 1700 Mpa and ultimate tensile strengths as high as 1750 Mpa after aging, with elongation percentages of 3 percent or less in 50 mm. It is generally provided in thicknesses between 0.635 and 0.787 mm, and in widths of 25.4 mm. This product is most commonly used in the manufacture of television tubes and is currently available under proprietary trade names such as ''Durphynox 17.''[3]

Finally, three specialty stainless steels typically used in certain industrial blades and surgical and medical instruments are also excluded from the scope of this order. These include stainless steel strip in coils used in the production of textile cutting tools (*e.g.*, carpet knives).[4] This steel is similar to ASTM grade 440F, but containing, by weight, 0.5 to 0.7 percent of molybdenum. The steel also contains, by weight, carbon of between 1.0 and 1.1 percent, sulfur of 0.020 percent or less, and includes between 0.20 and 0.30 percent copper and between 0.20 and 0.50 percent cobalt. This steel is sold under proprietary names such as ''GIN4 Mo.'' The second excluded stainless steel strip in coils is similar to AISI 420-J2 and contains, by weight, carbon of between 0.62 and 0.70 percent, silicon of between 0.20 and 0.50 percent, manganese of between

[1] ''Arnokrome III'' is a trademark of the Arnold Engineering Company.

[2] ''Gilphy 36'' is a trademark of Imphy, S.A.

[3] ''Durphynox 17'' is a trademark of Imphy, S.A.

[4] This list of uses is illustrative and provided for descriptive purposes only

0.45 and 0.80 percent, phosphorus of no more than 0.025 percent and sulfur of no more than 0.020 percent. This steel has a carbide density on average of 100 carbide particles per square micron. An example of this product is ''GIN5'' steel. The third specialty steel has a chemical composition similar to AISI 420 F, with carbon of between 0.37 and 0.43 percent, molybdenum of between 1.15 and 1.35 percent, but lower manganese of between 0.20 and 0.80 percent, phosphorus of no more than 0.025 percent, silicon of between 0.20 and 0.50 percent, and sulfur of no more than 0.020 percent. This product is supplied with a hardness of more than Hv 500 guaranteed after customer processing, and is supplied as, for example, ''GIN6.''[5]

Fair Value Comparisons

To determine whether sales of S4 in the United States were made at less than fair value, we compared United States Price (USP) to normal value (NV), as described in the ''United States Price'' and ''Normal Value'' sections of this notice. In accordance with section 777A(d)(2) of the Tariff Act, we calculated monthly weighted-average NVs and compared these to individual U.S. transactions.

Constructed Export Price (CEP)

We calculated CEP in accordance with subsection 772(b) of the Tariff Act, because sales to the first unaffiliated purchaser took place after importation into the United States. We based CEP on the packed, delivered, duty paid or delivered prices to unaffiliated purchasers in the United States. We made adjustments for price or billing errors, where applicable. We also made deductions for movement expenses in accordance with section 772(c)(2)(A) of the Tariff Act; these included, where appropriate, foreign inland freight, marine insurance, U.S. customs duties, U.S. inland freight, foreign brokerage and handling, international freight, foreign inland insurance, and U.S. warehousing expenses. In accordance with section 772(d)(1) of the Tariff Act, we deducted those selling expenses associated with economic activities occurring in the United States, including direct selling expenses (credit costs, warranty expenses, commissions and other direct selling expenses), inventory carrying costs, and indirect selling expenses. We offset credit expenses by the amount of interest revenue on sales. For CEP sales, we also made an adjustment for profit in accordance with section 772(d)(3) of the Tariff Act.

For those sales in which material was sent to an unaffiliated U.S. processor to be further processed, we made an adjustment based on the transaction-specific further-processing amounts reported by KTN. In addition, KTN's affiliated U.S. reseller, Ken-Mac, performed further processing on some of KTN's U.S. sales. For these sales, we deducted the cost of further processing in accordance with section 772(d)(2) of the Tariff Act. In calculating the cost of further manufacturing for Ken-Mac, we relied upon the further manufacturing information provided by KTN.

Normal Value

In order to determine whether there was a sufficient volume of sales in the home market to serve as a viable basis for calculating NV (*i.e.*, the aggregate volume of home market sales of the foreign like product was equal to or greater than five percent of the aggregate volume of U.S. sales), we compared the respondent's volume of home market sales of the foreign like product to the volume of U.S. sales of the subject merchandise, in accordance with section 773(a)(1) of the Tariff Act. As KTN's aggregate volume of home market sales of the foreign like product was greater than five percent of its aggregate volume of U.S. sales of the subject merchandise, we determined the home market was viable. Therefore, we have based NV on home market sales in the usual commercial quantities and in the ordinary course of trade.

Sales to affiliated customers in the home market not made at arm's-length prices (if any) were excluded from our analysis because we considered them to be outside the ordinary course of trade. If sales were not made at arm's-length then the Department used the sale from the affiliated party to the first unaffiliated party. *See* 19 CFR 351.102. To test whether these sales to affiliates were made at arm's-length prices, we compared on a model-specific basis the starting prices of sales to affiliated and unaffiliated customers net of all movement charges, direct selling expenses, and packing. Where, for the tested models of subject merchandise, prices to the affiliated party were on average 99.5 percent or more of the price to the unaffiliated parties, we determined that sales made to the affiliated party were at arm's length. *See* 19 CFR 351.403(c). In instances where no price ratio could be calculated for an affiliated customer because identical merchandise was not sold to unaffiliated customers, we were unable to determine whether these sales were made at arm's-length prices and, therefore, excluded them from our analysis. *See Final Determination of Sales at Less Than Fair Value: Certain Cold-Rolled Carbon Steel Flat Products from Argentina*, 58 FR 37062, 37077 (July 9, 1993) and *Notice of Preliminary Determination of Sales at Less Than Fair Value and Postponement of Final Determination; Emulsion Styrene-Butadiene Rubber from Brazil*, 63 FR 59509, 59512 (November 4, 1998). Where the exclusion of such sales eliminated all sales of the most appropriate comparison product, we made a comparison to the next most similar model.

Cost of Production (COP) Analysis

The Department disregarded certain sales made by KTN in the first administrative review because these sales failed the cost test. *See Notice of Final Results of Antidumping Duty Administrative Review: Stainless Steel Sheet and Strip in Coils from Germany*, 67 FR 7668 (February 20, 2002); *see also Stainless Steel Sheet and Strip in Coils from Germany; Notice of Preliminary Results of Antidumping Duty Administrative Review*, 66 FR 42509, 42512 (August 13, 2001). Thus, in accordance with section 773(b)(2)(A)(ii) of the Tariff Act, there are reasonable grounds to believe or suspect that sales of S4 in the home market were made at prices below their cost of production (COP) in the current review period. Accordingly, pursuant to section 773(b) of the Tariff Act, we initiated a cost investigation to determine whether sales made during the POR were at prices below their respective COP.

In accordance with section 773(b)(3) of the Tariff Act, we calculated COP based on the sum of the cost of materials and fabrication for the foreign like product, plus an amount for general and administrative expenses (G&A), interest expenses, and home market packing costs. We relied on the COP data submitted by KTN, except where noted below:

In accordance with section 773(f)(2) of the Tariff Act, where KTN's reported transfer prices for purchases of nickel from an affiliated party were not at arm's length, we increased these prices to reflect the prevailing market prices. *See* KTN Preliminary Results Analysis Memorandum, July 31, 2002.

In accordance with section 773(b)(1) of the Tariff Act, in determining whether to disregard home market sales made at prices below COP, we examined whether such sales were made within an extended period of time in substantial quantities, and whether such sales were made at prices which

[5] ''GIN4 Mo,'' ''GIN5'' and ''GIN6'' are the proprietary grades of Hitachi Metals America, Ltd.

would permit recovery of all costs within a reasonable period of time.

Pursuant to section 773(b)(2)(C) of the Tariff Act, where less than 20 percent of KTN's sales of a given model were at prices less than COP, we did not disregard any below-cost sales of that model because these below-cost sales were not made in substantial quantities. Where 20 percent or more of KTN's home market sales of a given model were at prices less than the COP, we disregarded the below-cost sales because such sales were made: (1) in substantial quantities within the POR (*i.e.*, within an extended period of time) in accordance with section 773(b)(2)(B) of the Tariff Act, and (2) at prices which would not permit recovery of all costs within a reasonable period of time, in accordance with section 773(b)(2)(D) of the Tariff Act (*i.e.*, the sales were made at prices below the weighted-average per-unit COP for the POR). We used the remaining sales as the basis for determining NV, if such sales existed, in accordance with section 773(b)(1) of the Tariff Act.

Constructed Value

In accordance with section 773(e)(1) of the Tariff Act, we calculated CV based on the sum of respondent's cost of materials, fabrication, SG&A, including interest expenses, profit, and U.S. packing costs. In accordance with section 773(e)(2)(A) of the Tariff Act, we based SG&A and profit on the amounts incurred and realized by KTN in connection with the production and sale of the foreign like product in the ordinary course of trade for consumption in the foreign country. We used the CV data KTN supplied in its section D supplemental questionnaire response, except for the adjustments that we made for COP, above.

Price-based Normal Value

We calculated NV based on prices to unaffiliated customers or prices to affiliated customers that we determined to be at arm's length. We made adjustments for interest revenue, discounts, and rebates where appropriate. We made deductions, where appropriate, for foreign inland freight, handling, and warehousing, pursuant to section 773(a)(6)(B) of the Tariff Act. In addition, when comparing sales of similar merchandise, we made adjustments for differences in cost attributable to differences in physical characteristics of the merchandise pursuant to section 773(a)(6)(C)(ii) of the Tariff Act and 19 CFR 351.411. We also made adjustments for differences in circumstances of sale (COS) in accordance with section 773(a)(6)(C)(iii) of the Tariff Act and 19 CFR 351.410. We made COS adjustments for imputed credit expenses and warranty expenses. We also made an adjustment, where appropriate, for the CEP offset in accordance with section 773(a)(7)(B) of the Tariff Act. *See* Level of Trade and CEP Offset section below. Finally, we deducted home market packing costs and added U.S. packing costs in accordance with sections 773(a)(6)(A) and (B) of the Tariff Act.

In accordance with section 773(a)(4) of the Tariff Act, we based NV on CV if we were unable to find a contemporaneous home market match of such or similar merchandise. Where appropriate, we made adjustments to CV in accordance with section 773(a)(8) of the Tariff Act. Where we compared CV to CEP, we deducted from CV the weighted-average home market direct selling expenses.

Level of Trade and CEP Offset

In accordance with section 773(a)(1)(B)(i) of the Tariff Act, to the extent practicable, we determine NV based on sales in the comparison market at the same level of trade (LOT) as the CEP transaction. The NV LOT is that of the starting price sales in the comparison market or, when NV is based on CV, that of the sales from which we derive selling, general and administrative (SG&A) expenses and profit. For CEP, it is the level of the constructed sale from the exporter to the importer. Moreover, for CEP sales, we consider only the selling activities reflected in the price after the deduction of expenses and profit, pursuant to section 772(d) of the Tariff Act. *See Micron Technology, Inc. v. United States*, 243 F.3d 1301, 1314-1315 (Fed. Cir. 2001).

To determine whether NV sales are at a different LOT than CEP sales, we examine stages in the marketing process and selling functions along the chain of distribution between the producer and the unaffiliated customer. If the comparison market sales are at a different LOT, and the difference affects price comparability, as manifested in a pattern of consistent price differences between the sales on which NV is based and comparison market sales at the LOT of the export transaction, we make a LOT adjustment under section 773(a)(7)(A) of the Tariff Act. Finally, for CEP sales, if the NV level is more remote from the factory than the CEP level and there is no basis for determining whether the differences in the levels between NV and CEP affects price comparability, we adjust NV under section 773(a)(7)(B) of the Tariff Act (the CEP offset provision). *See e.g., Certain Carbon Steel Plate from South Africa, Final Determination of Sales at Less Than Fair Value*, 62 FR 61731 (November 19, 1997).

In implementing these principles in this review, we asked KTN to identify the specific differences and similarities in selling functions and support services between all phases of marketing in the home market and the United States. KTN identified four channels of distribution in the home market: (1) Mill direct sales (2) mill inventory sales (3) service center inventory sales, and (4) service center processed sales. For all channels KTN performs similar selling functions such as negotiating prices with customers, setting similar credit terms, arranging freight to the customer, and conducting market research and sales calls. The remaining selling activities did not differ significantly by channel of distribution. Because channels of distribution do not qualify as separate levels of trade when the selling functions performed for each customer class or channel are sufficiently similar, we determined one level of trade exists for KTN's home market sales.

For the U.S. market KTN reported four channels of distribution: (1) Back-to-back CEP sales made through KHSP, KTNNA and Thyssen Marathon Canada (TMC); (2) consignment CEP sales made through KHSP, KTNNA and TMC; (3) inventory sales from KTNNA and TMC; and (4) sales by Ken-Mac. All U.S. sales were CEP transactions. Therefore, the U.S. market has one LOT.

When we compared CEP sales (after deductions made pursuant to section 772(d) of the Tariff Act) to home market sales, we determined that for CEP sales KTN performed fewer customer sales contacts, technical services, delivery services, and warranty services. In addition, the differences in selling functions performed for home market and CEP transactions indicates that home market sales involved a more advanced stage of distribution than CEP sales. In the home market KTN provides marketing further down the chain of distribution by providing certain downstream selling functions that are normally performed by the affiliated resellers in the U.S. market (*e.g.*, technical advice, credit and collection, *etc.*).

Based on our analysis, we determined that CEP and the starting price of home market sales represent different stages in the marketing process, and are thus at different LOTs. Therefore, when we compared CEP sales to HM sales, we examined whether a LOT adjustment may be appropriate. In this case KTN sold at one LOT in the home market;

therefore, there is no basis upon which to determine whether there is a pattern of consistent price differences between levels of trade. Further, we do not have the information which would allow us to examine pricing patterns of KTN's sales of other similar products, and there is no other record evidence upon which such an analysis could be based.

Because the data available do not provide an appropriate basis for making a LOT adjustment but the LOT in Germany for KTN is at a more advanced stage than the LOT of the CEP sales, a CEP offset is appropriate in accordance with section 773(a)(7)(B) of the Tariff Act, as claimed by KTN. Where there were commissions in U.S. market but not the home market, we calculated the CEP offset as the lesser of either the U.S. commissions or the home market indirect selling expenses. Where there were commissions in both the U.S. and home markets, we calculated the CEP offset as the lesser of either the home market indirect selling expenses or the difference between the U.S. and home market commissions. Where there were commissions in the home market but not the U.S. market, we set the CEP offset equal to zero. We performed these calculations in accordance with 772(d)(1)(D) of the Tariff Act. We applied the CEP offset to NV, whether based on home market prices or CV.

Facts Available

Section 776(a)(2) of the Tariff Act provides that if an interested party: (A) Withholds information that has been requested by the Department; (B) fails to provide such information in a timely manner or in the form or manner requested, subject to subsections 782(c)(1) and (e) of the Tariff Act; (C) significantly impedes a determination under the antidumping statute; or (D) provides such information but the information cannot be verified, the Department shall, subject to subsection 782(d) of the Act, use facts otherwise available in reaching the applicable determination.

In our September 6, 2001 questionnaire we requested KTN to report the physical characteristics of grade (GRADEH), hot/cold rolled (ROLLH), gauge (GAUGEH), finish (FINISHH), metallic coated (MCOATH), non-metallic coating (NONMCOTH), width (WIDTHH), temper (TEMPERH), and edge trim (EDGEH). In its November 6, 2001 response KTN's affiliated home market reseller, Nirosta Service Center GmbH (NSC), was unable to provide the physical characteristics of ROLLH, GAUGEH, FINISHH, WIDTHH, TEMPERH for a small number of sales. The absence of the noted four characteristics precludes our making proper comparisons to these sales because of the uniqueness of each characteristic.

Section 782(c)(1) of the Tariff Act provides that if an interested party ''promptly after receiving a request from [the Department] for information, notifies [the Department] that such party is unable to submit the information requested in the requested form and manner, together with a full explanation and suggested alternative form in which such party is able to submit the information,''the Department may modify the requirements to avoid imposing an unreasonable burden on that party.

Also, section 782(d) of the Tariff Act provides that, if the Department determines that a response to a request for information does not comply with the request, the Department will inform the person submitting the response of the nature of the deficiency and shall, to the extent practicable, provide that person the opportunity to remedy or explain the deficiency. If that person submits further information that continues to be unsatisfactory, or this information is not submitted within the applicable time limits, the Department may, subject to section 782(e), disregard all or part of the original and subsequent responses, as appropriate.

Additionally, section 782(e) of the Tariff Act states that the Department shall not decline to consider information deemed ''deficient'' under section 782(d) if: (1) The information is submitted by the established deadline; (2) the information can be verified; (3) the information is not so incomplete that it cannot serve as a reliable basis for reaching the applicable determination; (4) the interested party has demonstrated that it acted to the best of its ability; and (5) the information can be used without undue difficulties.

Pursuant to section 782(d) of the Tariff Act, the Department informed KTN of the deficiencies in its response. In the Department's April 8, 2002 supplemental we requested KTN to remedy the missing characteristics or explain in detail why it was not able to provide the requested information. KTN's April 26, 2002 supplemental response stated the company would have to manually review the invoices and that it would not be able to do so within the time permitted. The Department again asked KTN to remedy the deficiencies in a second supplemental questionnaire sent July 2, 2002. KTN's July 19, 2002 response stated the company attempted to the best of its ability to fill in the missing product characteristics but, for a small number of sales, could not supply the necessary information. However, KTN did not suggest an alternative method to remedy the product characteristics for these sales.

In accordance with section 776(a)(2)(B) of the Tariff Act, in these preliminary results we find it necessary to use partial facts available in those instances where the respondent did not provide us with certain information necessary to conduct our analysis.

Moreover, section 776(b) of the Tariff Act provides that the Department may use an inference adverse when a party has failed to cooperate to the best of its ability to the Department's requests for information. *See* also Statement of Administrative Action (SAA) accompanying the URAA, H.R. Rep. No. 103-316 at 870 (1994).

The Department repeatedly requested KTN to instances to report product characteristics. As stated above, KTN's April 26, 2002, supplemental claimed the company would have to manually review the invoices and it would not be able to do so within the time permitted. KTN's July 19, 2002 supplement response stated again that it was not able to report the product characteristics. Pursuant to section 782(c)(1) of the Tariff Act, KTN had the opportunity to suggest reporting the missing characteristics in an alternative form, yet it failed to do so. During the 1999 - 2000 review of S4 from Germany, a similar situation occurred where KTN initially could not report the physical characteristics of ROLLH, GAUGEH, FINISHH, WIDTHH, and TEMPERH for a number of its home market sales. However, it was able to remedy the missing characteristics by either calculating the average finish, gauge, and width from its packing list data or eventually reporting the actual transaction-specific information. *See* KTN's March 2, 2001 supplemental A through C response and May 21, 2001 supplemental B and C response. KTN is a sophisticated company with experience in the procedures of an antidumping investigation and administrative review. *See Notice of Amended Final Determination of Antidumping Duty Investigation: Stainless Steel Sheet and Strip in Coils from Germany,* 67 FR 15178 (March 29, 2002) and *Notice of Final Results of Antidumping Duty Administrative Review: Stainless Steel Sheet and Strip in Coils from Germany*, 67 FR 7668 (February 20, 2002).

Based on the foregoing, we preliminarily conclude that KTN has not provided all the information necessary to complete our analysis and has not acted to the best of its ability.

Therefore, pursuant to 776(b) of the Tariff Act, an adverse inference is warranted. We have preliminarily determined that, pursuant to section 776(b) of the Tariff Act, it is appropriate to use partial adverse facts available in calculating a margin on these sales. In each instance where KTN failed to provide one or more necessary model match characteristics, we matched this product to the lowest-priced product of the same grade sold in the United States by assigning the home market transaction the corresponding U.S. control number. For any home market sales of grades not sold in the United States which had missing characteristics, we assigned this product the home market control number of the highest-priced product of the same grade in the home market.

Preliminary Results of Review

As a result of our review, we preliminarily determine the following weighted-average dumping margin exists for the period July 1, 2000 through June 30, 2001:

Manufacturer / Exporter	Weighted Average Margin (percentage)
KTN	5.34

The Department will disclose calculations performed within five days of the date of publication of this notice in accordance with 19 CFR 351.224(b). An interested party may request a hearing within thirty days of publication. *See* CFR 351.310(c). Any hearing, if requested, will be held 37 days after the date of publication, or the first business day thereafter, unless the Department alters the date pursuant to 19 CFR 351.310(d). Interested parties may submit case briefs no later than 30 days after the date of publication of these preliminary results of review. Rebuttal briefs, limited to issues raised in the case briefs, may be filed no later than 35 days after the date of publication of this notice. Parties who submit argument in these proceedings are requested to submit with the argument (1) a statement of the issue, (2) a brief summary of the argument and (3) a table of authorities. Further, we would appreciate it if parties submitting written comments would provide the Department with an additional copy of the public version of any such comments on diskette. The Department will issue final results of these administrative reviews, including the results of our analysis of the issues in any such written comments or at a hearing, within 120 days of publication of these preliminary results.

The Department shall determine, and the U.S. Customs Service shall assess, antidumping duties on all appropriate entries. In accordance with 19 CFR 351.212(b)(1), we will calculate *ad valorem* assessment rates for the merchandise based on the ratio of the total amount of antidumping duties calculated for the examined sales made during the POR to the total customs value of the sales used to calculate those duties. This rate will be assessed uniformly on all entries that particular importer made during the POR. The Department will issue appropriate appraisement instructions directly to the Customs Service upon completion of the review.

Furthermore, the following deposit requirements will be effective upon completion of the final results of this administrative review for all shipments of S4 in coils from Germany entered, or withdrawn from warehouse, for consumption on or after the publication date of the final results of this administrative review, as provided by section 751(a)(1) of the Tariff Act:

1) The cash deposit rate for KTN will be the rate established in the final results of review;

2) If the exporter is not a firm covered in this review or the LTFV investigation, but the manufacturer is, the cash deposit rate will be the rate established for the most recent period for the manufacturer of the merchandise; and

3) If neither the exporter nor the manufacturer is a firm covered in this or any previous review conducted by the Department, the cash deposit rate will be 13.48 percent (*see Notice of Amended Final Determination of Antidumping Duty Investigation: Stainless Steel Sheet and Strip in Coils from Germany*, 67 FR 15178 (March 29, 2002)).

This notice also serves as a preliminary reminder to importers of their responsibility under 19 CFR 351.402(f) to file a certificate regarding the reimbursement of antidumping duties prior to liquidation of the relevant entries during this review period. Failure to comply with this requirement could result in the Secretary's presumption that reimbursement of antidumping duties occurred and the subsequent assessment of double antidumping duties.

We are issuing and publishing this notice in accordance with sections 751(a)(1) and 777(i)(1) of the Tariff Act.

Dated: July 31, 2002.

Faryar Shirzad,

Assistant Secretary for Import Administration.

[FR Doc. 02–19987 Filed 8–6–02; 8:45 am]

BILLING CODE 3510–DS–S

DEPARTMENT OF COMMERCE

International Trade Administration

[A–201–822]

Stainless Steel Sheet and Strip in Coils from Mexico; Preliminary Results of Antidumping Duty Administrative Review

AGENCY: Import Administration, International Trade Administration, Department of Commerce.

ACTION: Notice of Preliminary Results of Antidumping Duty Administrative Review.

SUMMARY: In response to requests from respondent ThyssenKrupp Mexinox S.A. de C.V. (Mexinox) and ThyssenKrupp Mexinox USA, Inc. (Mexinox USA) (collectively, Mexinox)[1], and Allegheny Ludlum, AK Steel Corporation (formerly Armco, Inc.), J&L Specialty Steel, Inc., North American Stainless, Butler-Armco Independent Union, Zanesville Armco Independent Union, and the United Steelworkers of America, AFL-CIO/CLC (collectively, petitioners), the Department of Commerce (the Department) is conducting an administrative review of the antidumping duty order on stainless steel sheet and strip in coils (S4 in coils) from Mexico (A–201–822). This review covers one manufacturer/exporter (Mexinox) of the subject merchandise to the United States during the period July 1, 2000 to June 30, 2001.

We preliminarily determine that sales of S4 in coils from Mexico have been made below the normal value (NV). If these preliminary results are adopted in our final results of administrative review, we will instruct the U.S. Customs Service to assess antidumping duties based on the difference between the constructed export price (CEP) and NV. Interested parties are invited to comment on these preliminary results. Parties who submit argument in these proceedings are requested to submit with the argument: (1) a statement of the

[1] On July 26, 2002, we published in the **Federal Register** the final results of our determination that ThyssenKrupp Mexinox S.A. de C.V. is the successor-in-interest to Mexinox S.A. de C.V. for purposes of determining antidumping duty liability. *See Stainless Steel Sheet and Strip in Coils from Mexico: Final Results of Changed Circumstances Antidumping Duty Administrative Review*, 67 FR 48878 (July 26, 2002).

issues and (2) a brief summary of the argument.

EFFECTIVE DATE: August 7, 2002.

FOR FURTHER INFORMATION CONTACT: Deborah Scott or or Robert James, AD/CVD Enforcement, Group III, Import Administration, International Trade Administration, U.S. Department of Commerce, 14th Street and Constitution Avenue, N.W., Washington, D.C. 20230, telephone : (202) 482–2657 or (202) 482–0649, respectively.

SUPPLEMENTARY INFORMATION:

Applicable Statute And Regulations

Unless otherwise indicated, all citations to the Tariff Act of 1930, as amended (the Tariff Act), are references to the provisions effective January 1, 1995, the effective date of the amendments made to the Tariff Act by the Uruguay Rounds Agreements Act. In addition, unless otherwise indicated, all citations to the Department's regulations are to 19 CFR Part 351 (2001).

Background

On July 27, 1999, the Department published in the **Federal Register** the *Notice of Amended Final Determination of Sales at Less Than Fair Value and Antidumping Duty Order* on stainless steel sheet and strip in coils from Mexico (64 FR 40560). On July 2, 2001, the Department published the *Notice of Opportunity to Request Administrative Review* of, *inter alia*, stainless steel sheet and strip in coils from Mexico for the period July 1, 2000 through June 30, 2001 (66 FR 34910).

In accordance with 19 CFR 351.213 (b)(1), Mexinox and the petitioners requested that we conduct an administrative review of Mexinox. On August 20, 2001, we published in the **Federal Register** a notice of initiation of this antidumping duty administrative review covering the period July 1, 2000 through June 30, 2001 (66 FR 43570).

Because it was not practicable to complete this review within the normal time frame, on March 6, 2002, we published in the **Federal Register** our notice of the extension of time limits for this review (67 FR 10133). This extension established the deadline for these preliminary results as July 31, 2002.

Scope of the Review

For purposes of this order, the products covered are certain stainless steel sheet and strip in coils. Stainless steel is an alloy steel containing, by weight, 1.2 percent or less of carbon and 10.5 percent or more of chromium, with or without other elements. The subject sheet and strip is a flat-rolled product in coils that is greater than 9.5 mm in width and less than 4.75 mm in thickness, and that is annealed or otherwise heat treated and pickled or otherwise descaled. The subject sheet and strip may also be further processed (*e.g.*, cold-rolled, polished, aluminized, coated, etc.) provided that it maintains the specific dimensions of sheet and strip following such processing.

The merchandise subject to this order is classified in the *Harmonized Tariff Schedule of the United States*(HTS) at subheadings: 7219.13.00.31, 7219.13.00.51, 7219.13.00.71, 7219.13.00.81, 7219.14.00.30, 7219.14.00.65, 7219.14.00.90, 7219.32.00.05, 7219.32.00.20, 7219.32.00.25, 7219.32.00.35, 7219.32.00.36, 7219.32.00.38, 7219.32.00.42, 7219.32.00.44, 7219.33.00.05, 7219.33.00.20, 7219.33.00.25, 7219.33.00.35, 7219.33.00.36, 7219.33.00.38, 7219.33.00.42, 7219.33.00.44, 7219.34.00.05, 7219.34.00.20, 7219.34.00.25, 7219.34.00.30, 7219.34.00.35, 7219.35.00.05, 7219.35.00.15, 7219.35.00.30, 7219.35.00.35, 7219.90.00.10, 7219.90.00.20, 7219.90.00.25, 7219.90.00.60, 7219.90.00.80, 7220.12.10.00, 7220.12.50.00, 7220.20.10.10, 7220.20.10.15, 7220.20.10.60, 7220.20.10.80, 7220.20.60.05, 7220.20.60.10, 7220.20.60.15, 7220.20.60.60, 7220.20.60.80, 7220.20.70.05, 7220.20.70.10, 7220.20.70.15, 7220.20.70.60, 7220.20.70.80, 7220.20.80.00, 7220.20.90.30, 7220.20.90.60, 7220.90.00.10, 7220.90.00.15, 7220.90.00.60, and 7220.90.00.80. Although the HTS subheadings are provided for convenience and Customs purposes, the Department's written description of the merchandise under review is dispositive.

Excluded from the scope of this order are the following: (1) Sheet and strip that is not annealed or otherwise heat treated and pickled or otherwise descaled; (2) sheet and strip that is cut to length; (3) plate (*i.e.*, flat-rolled stainless steel products of a thickness of 4.75 mm or more); (4) flat wire (*i.e.*, cold-rolled sections, with a prepared edge, rectangular in shape, of a width of not more than 9.5 mm); and (5) razor blade steel. Razor blade steel is a flat-rolled product of stainless steel, not further worked than cold-rolled (cold-reduced), in coils, of a width of not more than 23 mm and a thickness of 0.266 mm or less, containing, by weight, 12.5 to 14.5 percent chromium, and certified at the time of entry to be used in the manufacture of razor blades. *See* Chapter 72 of the HTSUS, ''Additional U.S. Note'' 1(d).

In response to comments by interested parties, the Department has determined that certain specialty stainless steel products are also excluded from the scope of this order. These excluded products are described below.

Flapper valve steel is defined as stainless steel strip in coils containing, by weight, between 0.37 and 0.43 percent carbon, between 1.15 and 1.35 percent molybdenum, and between 0.20 and 0.80 percent manganese. This steel also contains, by weight, phosphorus of 0.025 percent or less, silicon of between 0.20 and 0.50 percent, and sulfur of 0.020 percent or less. The product is manufactured by means of vacuum arc remelting, with inclusion controls for sulphide of no more than 0.04 percent and for oxide of no more than 0.05 percent. Flapper valve steel has a tensile strength of between 210 and 300 ksi, yield strength of between 170 and 270 ksi, plus or minus 8 ksi, and a hardness (Hv) of between 460 and 590. Flapper valve steel is most commonly used to produce specialty flapper valves for compressors.

Also excluded is a product referred to as suspension foil, a specialty steel product used in the manufacture of suspension assemblies for computer disk drives. Suspension foil is described as 302/304 grade or 202 grade stainless steel of a thickness between 14 and 127 microns, with a thickness tolerance of plus-or-minus 2.01 microns, and surface glossiness of 200 to 700 percent Gs. Suspension foil must be supplied in coil widths of not more than 407 mm, and with a mass of 225 kg or less. Roll marks may only be visible on one side, with no scratches of measurable depth. The material must exhibit residual stresses of 2 mm maximum deflection, and flatness of 1.6 mm over 685 mm length.

Certain stainless steel foil for automotive catalytic converters is also excluded from the scope of this order. This stainless steel strip in coils is a specialty foil with a thickness of between 20 and 110 microns used to produce a metallic substrate with a honeycomb structure for use in automotive catalytic converters. The steel contains, by weight, carbon of no more than 0.030 percent, silicon of no more than 1.0 percent, manganese of no more than 1.0 percent, chromium of between 19 and 22 percent, aluminum of no less than 5.0 percent, phosphorus of no more than 0.045 percent, sulfur of no more than 0.03 percent, lanthanum of between 0.002 and 0.05 percent, and total rare earth elements of more than 0.06 percent, with the balance iron.

Permanent magnet iron-chromium-cobalt alloy stainless strip is also excluded from the scope of this order. This ductile stainless steel strip contains, by weight, 26 to 30 percent chromium, and 7 to 10 percent cobalt, with the remainder of iron, in widths 228.6 mm or less, and a thickness between 0.127 and 1.270 mm. It exhibits magnetic remanence between 9,000 and 12,000 gauss, and a coercivity of between 50 and 300 oersteds. This product is most commonly used in electronic sensors and is currently available under proprietary trade names such as ''Arnokrome III.''[2]

Certain electrical resistance alloy steel is also excluded from the scope of this order. This product is defined as a non-magnetic stainless steel manufactured to American Society of Testing and Materials (ASTM) specification B344 and containing, by weight, 36 percent nickel, 18 percent chromium, and 46 percent iron, and is most notable for its resistance to high temperature corrosion. It has a melting point of 1390 degrees Celsius and displays a creep rupture limit of 4 kilograms per square millimeter at 1000 degrees Celsius. This steel is most commonly used in the production of heating ribbons for circuit breakers and industrial furnaces, and in rheostats for railway locomotives. The product is currently available under proprietary trade names such as ''Gilphy 36.''[3]

Certain martensitic precipitation-hardenable stainless steel is also excluded from the scope of this order. This high-strength, ductile stainless steel product is designated under the Unified Numbering System (UNS) as S45500–grade steel, and contains, by weight, 11 to 13 percent chromium, and 7 to 10 percent nickel. Carbon, manganese, silicon and molybdenum each comprise, by weight, 0.05 percent or less, with phosphorus and sulfur each comprising, by weight, 0.03 percent or less. This steel has copper, niobium, and titanium added to achieve aging, and will exhibit yield strengths as high as 1700 Mpa and ultimate tensile strengths as high as 1750 Mpa after aging, with elongation percentages of 3 percent or less in 50 mm. It is generally provided in thicknesses between 0.635 and 0.787 mm, and in widths of 25.4 mm. This product is most commonly used in the manufacture of television tubes and is currently available under proprietary trade names such as ''Durphynox 17.''[4]

Finally, three specialty stainless steels typically used in certain industrial blades and surgical and medical instruments are also excluded from the scope of this order. These include stainless steel strip in coils used in the production of textile cutting tools (*e.g.*, carpet knives).[5] This steel is similar to ASTM grade 440F, but containing, by weight, 0.5 to 0.7 percent of molybdenum. The steel also contains, by weight, carbon of between 1.0 and 1.1 percent, sulfur of 0.020 percent or less, and includes between 0.20 and 0.30 percent copper and between 0.20 and 0.50 percent cobalt. This steel is sold under proprietary names such as ''GIN4 Mo.'' The second excluded stainless steel strip in coils is similar to AISI 420–J2 and contains, by weight, carbon of between 0.62 and 0.70 percent, silicon of between 0.20 and 0.50 percent, manganese of between 0.45 and 0.80 percent, phosphorus of no more than 0.025 percent and sulfur of no more than 0.020 percent. This steel has a carbide density on average of 100 carbide particles per square micron. An example of this product is ''GIN5'' steel. The third specialty steel has a chemical composition similar to AISI 420 F, with carbon of between 0.37 and 0.43 percent, molybdenum of between 1.15 and 1.35 percent, but lower manganese of between 0.20 and 0.80 percent, phosphorus of no more than 0.025 percent, silicon of between 0.20 and 0.50 percent, and sulfur of no more than 0.020 percent. This product is supplied with a hardness of more than Hv 500 guaranteed after customer processing, and is supplied as, for example, ''GIN6.''[6]

Sales Made Through Affiliated Resellers

A. U.S. Market

As noted in Mexinox's October 12, 2001 questionnaire response at 10, Ken-Mac Metals Inc. (Ken-Mac) is an affiliated reseller that sold subject merchandise in the United States during the POR. Thus, we have included in our preliminary margin calculation resales of Mexinox subject merchandise made through Ken-Mac.

B. Home Market

Mexinox Trading, S.A. de C.V. (Mexinox Trading), a wholly-owned subsidiary of Mexinox, sells both subject and non-subject merchandise in the home market. In its October 12, 2001 questionnaire response, Mexinox reported that sales through Mexinox Trading represented less than five percent of Mexinox's total sales of subject merchandise in the home market. Because Mexinox Trading's sales of subject merchandise were less than five percent of home market subject merchandise sales, and because Mexinox certified these sales passed the Department's arm's-length test, pursuant to section 351.403 (c) and (d) of the Department's regulations, we permitted Mexinox to report its sales to Mexinox Trading rather than require it to report downstream sales by Mexinox Trading to the first unaffiliated customer.

Fair Value Comparisons

To determine whether sales of S4 in coils from Mexico to the United States were made at less than fair value, we compared the CEP[7] to the NV, as described in the ''Constructed Export Price'' and ''Normal Value'' sections of this notice, below. In accordance with section 777A(d)(2) of the Tariff Act, we compared individual CEPs to monthly weighted-average NVs.

Transactions Reviewed

For its home market and U.S. sales Mexinox reported the date of invoice as the date of sale, in keeping with the Department's stated preference for using the invoice date as the date of sale (19 CFR 351.401(i)). Mexinox stated the invoice date represented the date when the essential terms of sales, *i.e.*, price and quantity, are definitively set, and that up to the time of shipment and invoicing, these terms were subject to change. Because petitioners alleged that Mexinox did not provide adequate support for its claim that price and quantity may change at any time between the final order acceptance date (confirmation date) and the final invoice date, the Department requested that Mexinox provide additional information concerning the nature and frequency of price and quantity changes occurring between the date of order and date of invoice. We also requested that Mexinox report the order date for each transaction. Mexinox responded to our request on May 8, 2002. Based on our analysis of the information submitted by Mexinox, we have preliminarily determined the date of invoice is the appropriate date of sale because record evidence indicates that in a number of instances the price and quantity changed between the date of the order

[2] ''Arnokrome III'' is a trademark of the Arnold Engineering Company.

[3] ''Gilphy 36'' is a trademark of Imphy, S.A.

[4] ''Durphynox 17'' is a trademark of Imphy, S.A.

[5] This list of uses is illustrative and provided for descriptive purposes only.

[6] ''GIN4 Mo,'' ''GIN5'' and ''GIN6'' are the proprietary grades of Hitachi Metals America, Ltd.

[7] Mexinox categorized some of its U.S. sales as CEP sales and some as export price (EP) sales. However, as discussed below in the ''Level of Trade'' section, we have determined that all of Mexinox's U.S. sales are properly classified as CEP sales for these preliminary results.

acceptance and the date of invoice. Therefore, we find Mexinox's claim that price and quantity terms are subject to negotiation until the date of invoice is substantiated.

Product Comparisons

In accordance with section 771(16) of the Tariff Act, we considered all products produced by the respondent covered by the description in the ''Scope of the Review'' section, above, and sold in the home market during the POR, to be foreign like products for purposes of determining appropriate product comparisons to U.S. sales. Where there were no sales of identical merchandise in the home market to compare to U.S. sales, we compared U.S. sales to the next most similar foreign like product on the basis of the characteristics and reporting instructions listed in the Department's questionnaire.

Level of Trade

In accordance with section 773(a)(1)(B)(i) of the Tariff Act, to the extent practicable, we determine NV based on sales in the comparison market at the same level of trade (LOT) as the CEP transaction. The NV LOT is that of the starting price of the comparison sales in the home market or, when NV is based on CV, that of the sales from which we derive selling, general, and administrative (SG&A) expenses and profit. For CEP it is the level of the constructed sale from the exporter to the importer.

To determine whether NV sales are at a different LOT than CEP sales, we examine stages in the marketing process and selling functions along the chain of distribution between the producer and the unaffiliated customer. If the comparison market sales are at a different LOT, and the difference affects price comparability, as manifested in a pattern of consistent price differences between the sales on which NV is based and comparison market sales at the LOT of the export transaction, we make a LOT adjustment under section 773(a)(7)(A) of the Tariff Act. Finally, for CEP sales, if the NV level is more remote from the factory than the CEP level and there is no basis for determining whether the differences in the levels between NV and CEP sales affect price comparability, we adjust NV under section 773(a)(7)(B) of the Tariff Act (the CEP offset provision).

In our September 6, 2001 questionnaire, we asked Mexinox to identify the specific differences and similarities in selling functions and support services between all phases of marketing in the home market and the United States. Mexinox identified two channels of distribution in the home market: (1) retailers, and (2) end-users. For both channels, Mexinox performs similar selling functions such as pre-sale technical assistance and after-sales warranty services. *See, e.g.*, Attachment A–21 of Mexinox's May 8, 2002 submission. Because channels of distribution do not qualify as separate LOTs when the selling functions performed for each customer class are sufficiently similar, we determined one LOT exists for Mexinox's home market sales. *See Certain Stainless Steel Wire Rods from France: Final Results of Antidumping Duty Administrative Review*, 63 FR 30185, 30190 (June 3, 1998).

For the U.S. market Mexinox reported two LOTs: (1) sales designated as EP transactions, which consisted, in some cases, of sales made directly to unaffiliated U.S. customers (''direct shipments''), and in other cases of sales made from the stock of finished goods held at the Mexican factory in San Luis Potosi to unaffiliated U.S. customers (''SLP stock sales''); and (2) CEP sales made through Mexinox USA's Brownsville warehouse to service centers and end users. For both direct shipments and SLP stock sales (*i.e.*, those considered by Mexinox to be EP sales), Mexinox USA acted as the importer of record, collected purchase orders, invoiced the customer and collected payment. *See, e.g.*, Mexinox's October 12, 2001 questionnaire response at A–35 and 36 and Mexinox's November 7, 2001 questionnaire response at C–51. Thus, following the criteria set forth by the U.S. Court of Appeals for the Federal Circuit (the Federal Circuit) in *AK Steel Corp.* v. *United States*, 226 F.3d 1361 (Fed. Cir. 2000) (*AK Steel*), we determine Mexinox's direct shipments and SLP stock sales constitute a sale between Mexinox USA and its U.S. customer. In *AK Steel* the Federal Circuit, noting that CEP is defined as the price at which subject merchandise is first sold in the United States and EP as the price at which subject merchandise is first sold outside the United States, stated, ''the location of the sale appears to be critical to the distinction between the two categories.'' *See* AK Steel at 1369. Because Mexinox's sales of merchandise to its U.S. customers took place within the United States, we have classified Mexinox's direct shipments and SLP stock sales as CEP sales for these preliminary results.

When we compared CEP sales (after deductions made pursuant to section 772(d) of the Tariff Act) to home market sales, we determined that for CEP sales Mexinox performed fewer customer sales contacts, technical services, inventory maintenance, and warranty services. *See, e.g.*, Mexinox's October 12, 2001 original questionnaire response at A–31 and Attachment A–21 of Mexinox's May 8, 2002 supplemental questionnaire response. In addition, the differences in selling functions performed for home market and CEP transactions indicate home market sales involved a more advanced stage of distribution than CEP sales. In the home market Mexinox provides marketing further down the chain of distribution by providing certain downstream selling functions that are normally performed by service centers in the U.S. market (*e.g.*, technical advice, credit and collection, *etc.*).

Based on our analysis, we determined that CEP and the starting price of home market sales represent different stages in the marketing process, and are thus at different LOTs. Therefore, when we compared CEP sales to home market sales, we examined whether a level-of-trade adjustment may be appropriate. In this case, Mexinox sold at one LOT in the home market; therefore, there is no basis upon which to determine whether there is a pattern of consistent price differences between levels of trade. Further, we do not have the information which would allow us to examine pricing patterns of Mexinox's sales of other similar products, and there are no other respondents or other record evidence on which such an analysis could be based.

Because the data available do not provide an appropriate basis for making a LOT adjustment and the level of trade in Mexico for Mexinox is at a more advanced stage than the level of trade of the CEP sales, a CEP offset is appropriate in accordance with section 773(a)(7)(B) of the Tariff Act, as claimed by Mexinox. We based the amount of the CEP offset on the amount of home market indirect selling expenses, and limited the deduction for home market indirect selling expenses to the amount of indirect selling expenses deducted from CEP in accordance with section 772(d)(1)(D) of the Tariff Act. We applied the CEP offset to NV, whether based on home market prices or CV.

In addition to the three U.S. channels of distribution discussed above (direct sales, SLP stock sales, and sales through Mexinox's affiliate, Mexinox USA), Mexinox reported U.S. sales through one other channel of distribution: CEP sales through its affiliated reseller Ken-Mac (*see* the section on ''Affiliation'' above). For purposes of this preliminary determination, we treated this channel

of distribution as equivalent to the level of trade of other CEP sales.

Constructed Export Price

We calculated CEP in accordance with section 772(b) of the Tariff Act for those sales to the first unaffiliated purchaser that took place after importation into the United States. We based CEP on packed prices to unaffiliated purchasers in the United States. We made adjustments for discounts, rebates, and debit/credit notes where applicable. We also made deductions for movement expenses in accordance with section 772(c)(2)(A) of the Tariff Act; these included, where appropriate, foreign inland freight, foreign inland insurance, foreign brokerage and handling, U.S. customs duties, U.S. inland freight, U.S. brokerage, and U.S. warehousing expenses. As further directed by section 772(d)(1) of the Tariff Act, we deducted those selling expenses associated with economic activities occurring in the United States, including direct selling expenses (credit costs and warranty expenses), inventory carrying costs, and other indirect selling expenses. We also made an adjustment for profit in accordance with section 772(d)(3) of the Tariff Act, and added duty drawback to the starting price in accordance with section 772(c)(1)(B) of the Tariff Act. For those sales in which the material was sent to an unaffiliated U.S. processor to be further processed, we made an adjustment based on the transaction-specific further-processing amounts reported by Mexinox. In addition, the U.S. affiliated reseller Ken-Mac performed some further manufacturing of some of Mexinox's U.S. sales. For these sales, we deducted the cost of further processing in accordance with 772(d)(2) of the Tariff Act. In calculating the cost of further manufacturing for Ken-Mac, we relied upon the further manufacturing information provided by Mexinox.

Facts Available

In accordance with section 776(a)(1) of the Tariff Act, in these preliminary results we find it necessary to use partial facts available in those instances where the respondent did not provide us with certain information necessary to conduct our analysis.

In our September 6, 2001 questionnaire at G–6, we requested that Mexinox provide sales and cost data for all affiliates involved with the production or sale of the merchandise under review during the POR in both the home and U.S. markets. In its October 12, 2001 questionnaire response at 10, Mexinox indicated its affiliated reseller, Ken-Mac, sold subject merchandise in the United States during the POR. In its November 7, 2001 submission, Mexinox provided data related to Ken-Mac's resales of subject merchandise to unaffiliated customers in the United States. At page S1–2 of its May 8, 2002 supplemental questionnaire response, Mexinox indicated that Ken-Mac was unable to confirm the origin of some of the stainless steel material it sold during the POR. Therefore, Mexinox reported data on these particular resales through Ken-Mac in a separate database, indicating the quantity of each transaction that could be allocated reasonably to Mexinox. To designate a portion of these ''unattributable'' sales as resales of subject merchandise by Ken-Mac, Mexinox first calculated the relative percentage, by volume, of stainless steel merchandise that Ken-Mac purchased during the POR from Mexinox and other vendors. Then, of Ken-Mac's purchases of stainless steel merchandise from Mexinox, Mexinox determined the relative percentage, by volume, of subject stainless steel merchandise and non-subject stainless steel merchandise. *See* Attachment KMC–25 of Mexinox's June 3, 2002 submission. Thus, because of the unknown origin of certain of Ken-Mac's resales of subject merchandise, Mexinox has, in effect, not provided all the information necessary to complete our analysis.

Since Mexinox has not provided all of the information necessary to perform our analysis, we have preliminarily determined that, pursuant to section 776(a)(1) of the Tariff Act, it is appropriate to use the facts otherwise available in calculating a margin on Ken-Mac's ''unattributable'' sales. Section 776(a)(1) of the Tariff Act provides that the Department will, subject to section 782(d), use the facts otherwise available in reaching a determination if ''necessary information is not available on the record.'' Hence, for these preliminary results, we have calculated a margin on Ken-Mac's ''unattributable'' resales by applying the overall margin calculated on all other sales/resales of subject merchandise to the weighted-average price of these sales reported in Ken-Mac's ''unattributable'' sales database. *See also Stainless Steel Sheet and Strip in Coils From Mexico; Final Results of Antidumping Duty Administrative Review*, 67 FR 6490 (February 12, 2002). We note that for these preliminary results we have not used an adverse inference, as provided under section 776(b) of the Tariff Act, to calculate a margin on Ken-Mac's ''unattributable'' sales.

Normal Value

A. Selection of Comparison Market

To determine whether there is a sufficient volume of sales in the home market to serve as a viable basis for calculating NV (*i.e.*, the aggregate volume of home market sales of the foreign like product is greater than five percent of the aggregate volume of U.S. sales), we compared the respondent's volume of home market sales of the foreign like product to the volume of U.S. sales of the subject merchandise, in accordance with section 773(a)(1)(B) of the Tariff Act. Because the respondent's aggregate volume of home market sales of the foreign like product was greater than five percent of its aggregate volume of U.S. sales for the subject merchandise, we determined the home market was viable. *See, e.g.*, Mexinox's June 3, 2002 supplemental questionnaire response at Attachments A–35 (quantity and value chart), B–46 (home market sales listing), and C–43 (U.S. market sales listing).

B. Affiliated-Party Transactions and Arm's-Length Test

Sales to affiliated customers in the home market not made at arm's-length prices are excluded from our analysis because we consider them to be outside the ordinary course of trade. See 19 CFR 351.102(b). To test whether sales were made at arm's-length prices, we compared on a model-specific basis the starting prices of sales to affiliated and unaffiliated customers minus all movement charges, direct selling expenses, and packing. Where, for the tested models of subject merchandise, prices to the affiliated party were on average 99.5 percent or more of the price to the unaffiliated parties, we determined sales made to the affiliated party were at arm's length. *See* 19 CFR 351.403(c). In instances where no price ratio could be calculated for an affiliated customer because identical merchandise was not sold to unaffiliated customers, we were unable to determine whether these sales were made at arm's-length prices and, therefore, excluded them from our margin calculation. *See, e.g., Notice of Preliminary Determination of Sales at Less Than Fair Value and Postponement of Final Determination: Emulsion Styrene-Butadiene Rubber from Brazil,* 63 FR 59509 (Nov. 8, 1998), citing to *Final Determination of Sales at Less Than Fair Value: Certain Cold-Rolled Carbon Steel Flat Products from Argentina*, 58 FR 37062 (July 9, 1993). Where the exclusion of such sales eliminated all sales of the most appropriate comparison product, we made a comparison to the next most

similar model. For these preliminary results, we found that none of Mexinox's affiliated home market customers failed our arm's-length test.

C. Cost of Production Analysis

Because we disregarded sales of certain products made at prices below the cost of production (COP) in the investigation of S4 in coils from Mexico (*see Notice of Final Determination of Sales at Less Than Fair Value: Stainless Steel Sheet and Strip in Coils From Mexico*, 64 FR 30790 (June 8, 1999)),[8] we have reasonable grounds to believe or suspect that sales of the foreign like product under consideration for the determination of NV in this review for Mexinox may have been made at prices below the COP, as provided by section 773(b)(2)(A)(ii) of the Tariff Act. Therefore, pursuant to section 773(b)(1) of the Tariff Act, we initiated a COP investigation of sales by Mexinox.

To calculate COP, in accordance with section 773(f)(3) of the Tariff Act, we revised Mexinox's reported material costs to reflect the highest of cost of production, transfer price, or market price for those materials obtained from affiliated parties. We added the revised material costs to the respondent's reported cost of fabrication for the foreign like product, plus amounts for SG&A and packing costs, in accordance with section 773(b)(3) of the Tariff Act. We then computed weighted-average COPs during the POR, and compared the weighted-average COP figures to home market sales prices of the foreign like product as required under section 773(b) of the Tariff Act, in order to determine whether these sales had been made at prices below COP. On a product-specific basis, we compared the COP to the home market prices, less any applicable movement charges and discounts.

In determining whether to disregard home market sales made at prices below the COP, we examined, in accordance with sections 773(b)(1)(A) and (B) of the Tariff Act: (1) whether within an extended period of time, such sales were made in substantial quantities; and (2) whether such sales were made at prices which permitted the recovery of all costs within a reasonable period of time in the normal course of trade.

Where twenty percent or more of the respondent's sales of a given product were at prices below the COP, we found sales of that model were made in ''substantial quantities'' within an extended period of time, in accordance with sections 773(b)(2) (B) and (C) of the Tariff Act. Based on our comparison of prices to the weighted-average per-unit cost of production for the POR, we determined whether the below-cost prices were such as to provide for recovery of costs within a reasonable period of time, in accordance with section 773(b)(2)(D) of the Tariff Act.

Our cost test for Mexinox revealed that fewer than twenty percent of Mexinox's home market sales of certain products were at prices below Mexinox's COP. We therefore concluded that for such products, Mexinox had not made below-cost sales in substantial quantities. *See* section 773 (b)(2)(C)(i) of the Tariff Act. We therefore retained all such sales in our analysis. For other products, more than twenty percent of Mexinox's sales were at below-cost prices. In such cases we disregarded the below-cost sales, while retaining the above-cost sales for our analysis.

D. Constructed Value

In accordance with section 773(e) of the Tariff Act, we calculated CV based on the sum of the respondent's cost of materials, fabrication, SG&A expenses, profit, and U.S. packing costs. In accordance with section 773(e)(2)(A) of the Tariff Act, we based SG&A expenses and profit on the amounts incurred and realized by the respondent in connection with the production and sale of the foreign like product in the ordinary course of trade, for consumption in the foreign country. We deducted from CV the weighted-average home market direct selling expenses incurred on sales made in the ordinary course of trade.

E. Price-to-Price Comparisons

We calculated NV based on prices to unaffiliated customers or prices to affiliated customers we determined to be at arm's length. We made adjustments for debit or credit notes, discounts, rebates, interest revenue, and insurance revenue, where appropriate. We made deductions, where appropriate, for foreign inland freight, insurance, handling, and warehousing, pursuant to section 773(a)(6)(B) of the Tariff Act. In addition, we made adjustments for differences in cost attributable to differences in physical characteristics of the merchandise pursuant to section 773(a)(6)(C)(ii) of the Tariff Act and 19 CFR 351.411, as well as for differences in circumstances of sale (COS) in accordance with section 773(a)(6)(C)(iii) of the Tariff Act and 19 CFR 351.410. We made COS adjustments for imputed credit expenses and warranty expenses. As noted in the ''Level of Trade'' section of this notice, we also made an adjustment for the CEP offset in accordance with section 773(a)(7)(B) of the Tariff Act. Finally, we deducted home market packing costs and added U.S. packing costs in accordance with sections 773(a)(6)(A) and (B) of the Tariff Act.

F. Price-to-CV Comparisons

In accordance with section 773(a)(4) of the Tariff Act, we based NV on CV if we were unable to find a home market match of such or similar merchandise. Where appropriate, we made adjustments to CV in accordance with section 773(a)(8) of the Tariff Act. Where we compared CV to CEP, we deducted from CV the weighted-average home market direct selling expenses.

Currency Conversion

We made currency conversions into U.S. dollars based on the exchange rates in effect on the dates of the U.S. sales, as certified by the Federal Reserve Bank, in accordance with section 773A(a) of the Tariff Act.

Preliminary Results of Review

As a result of our review we preliminarily determine the following weighted-average dumping margin exists for the period July 1, 2000 through June 30, 2001:

Manufacturer / Exporter	Weighted Average Margin (percentage)
Mexinox	6.01

The Department will disclose calculations performed within five days of the date of publication of this notice in accordance with 19 CFR 351.224(b). An interested party may request a hearing within thirty days of publication. *See* CFR 351.310(c). Any hearing, if requested, will be held 37 days after the date of publication, or the first business day thereafter, unless the Department alters the date per 19 CFR 351.310(d). Interested parties may submit case briefs or written comments no later than 30 days after the date of publication of these preliminary results of review. Rebuttal briefs and rebuttals to written comments, limited to issues raised in the case briefs and comments, may be filed no later than 35 days after the date of publication of this notice. Parties who submit argument in these proceedings are requested to submit with the argument: 1) a statement of the

[8] Since initiating the instant review, we completed our first administrative review of S4 in coils from Mexico, in which we also found home market sales below COP. *See Stainless Steel Sheet and Strip in Coils from Mexico; Final Results of Antidumping Duty Administrative Review*, 67 FR 6490 (February 12, 2002), as amended, *Notice of Amended Final Results of Antidumping Duty Administrative Review: Stainless Steel Sheet and Strip in Coils from Mexico*, 67 FR 15542 (April 2, 2002)).

issue, 2) a brief summary of the argument and 3) a table of authorities. Further, we would appreciate it if parties submitting written comments would provide the Department with an additional copy of the public version of any such comments on diskette. The Department will issue final results of this administrative review, including the results of our analysis of the issues in any such written comments or at a hearing, within 120 days of publication of these preliminary results.

The Department shall determine, and the U.S. Customs Service shall assess, antidumping duties on all appropriate entries. In accordance with 19 CFR 351.212(b)(1), we will calculate importer-specific *ad valorem* assessment rates for the merchandise based on the ratio of the total amount of antidumping duties calculated for the examined sales made during the POR to the total customs value of the sales used to calculate those duties. This rate will be assessed uniformly on all entries of that particular importer made during the POR. The Department will issue appropriate appraisement instructions directly to the Customs Service upon completion of the review.

Furthermore, the following deposit requirements will be effective upon completion of the final results of this administrative review for all shipments of S4 in coils from Mexico entered, or withdrawn from warehouse, for consumption on or after the publication date of the final results of this administrative review, as provided by section 751(a)(1) of the Tariff Act:

1) The cash deposit rate for Mexinox will be the rate established in the final results of review;

2) If the exporter is not a firm covered in this review or the LTFV investigation, but the manufacturer is, the cash deposit rate will be the rate established for the most recent period for the manufacturer of the merchandise; and

3) If neither the exporter nor the manufacturer is a firm covered in this or any previous review conducted by the Department, the cash deposit rate will be the all others rate from the investigation (30.85 percent; *see Notice of Amended Final Determination of Sales at Less Than Fair Value and Antidumping Duty Order; Stainless Steel Sheet and Strip in Coils from Mexico*, 64 FR 40560, 40562 (July 27, 1999)).

This notice also serves as a preliminary reminder to importers of their responsibility under 19 CFR 351.402(f) to file a certificate regarding the reimbursement of antidumping duties prior to liquidation of the relevant entries during this review period. Failure to comply with this requirement could result in the Secretary's presumption that reimbursement of antidumping duties occurred and the subsequent assessment of double antidumping duties. We are issuing and publishing this notice in accordance with sections 751(a)(1) and 777(i)(1) of the Tariff Act.

Dated: July 31, 2002.

Faryar Shirzad,

Assistant Secretary for Import Administration.

[FR Doc. 02–19988 Filed 8–6–02; 8:45 am]

BILLING CODE 3510–DS–S

DEPARTMENT OF COMMERCE

International Trade Administration

[A–427–814]

Preliminary Results of Antidumping Administrative Review: Stainless Steel Sheet and Strip in Coils From France

AGENCY: Import Administration, International Trade Administration, U.S. Department of Commerce.

ACTION: Notice of preliminary results in the antidumping duty administrative review of stainless steel sheet and strip in coils from France.

SUMMARY: In response to requests from Ugine S.A. (''Ugine''), and Allegheny Ludlum, AK Steel Corporation (formerly Armco, Inc.), North American Stainless, Butler-Armco Independent Union, Zanesville Armco Independent Organization Inc., and the United Steelworkers of America, AFL–CIO/CLC, collectively, (''the Petitioners''), the U.S. Department of Commerce (''Department'') is conducting an administrative review of the antidumping duty order on stainless steel sheet and strip (''SSSS'') from France for the period July 1, 2000 through June 30, 2001. The Department preliminarily determines that a dumping margin exists for Ugine's sales of SSSS in the United States. If these preliminary results are adopted in our final results of this administrative review, we will instruct the U.S. Customs Service to assess antidumping duties on entries of Ugine's merchandise during the period of review. The preliminary results are listed in the section titled ''Preliminary Results of Review,'' *infra*.

EFFECTIVE DATE: August 7, 2002.

FOR FURTHER INFORMATION CONTACT: Alex Villanueva, Enforcement Group III, Import Administration, International Trade Administration, U.S. Department of Commerce, 1401 Constitution Avenue, NW., Washington, DC 20230; telephone: 202–482–3208.

Applicable Statute and Regulations

Unless otherwise indicated, all citations to the Tariff Act of 1930, as amended (''Act''), are references to the provisions effective January 1, 1995, the effective date of the amendments made to the Act by the Uruguay Round Agreements Act (''URAA''). In addition, unless otherwise indicated, all citations to the Department's regulations are to the regulations codified at 19 CFR part 351 (2001).

Background

On July 27, 1999, the Department published in the **Federal Register** the amended final determination and antidumping duty order on SSSS from France. *See Notice of Amended Final Determination of Sales at Less Than Fair Value and Antidumping Duty Order; Stainless Steel Sheet and Strip in Coils from France*, 64 FR 40562 (July 27, 1999) (''*Antidumping Duty Order*''). On March 19, 2002, the Department published in the **Federal Register** the amended final results of the first antidumping duty administrative review of SSSS from France. *See Notice of Amended Final Results of Antidumping Duty Administrative Review: Stainless Steel Sheet and Strip in Coils from France*, 67 FR 12522 (March 19, 2002). On July 2, 2001, the Department published in the **Federal Register** a notice of ''Opportunity to Request Administrative Review'' of the antidumping duty order on stainless steel sheet and strip in coils from France for the period July 1, 2000, through June 30, 2001. *See Notice of Opportunity to Request Administrative Review of Antidumping Duty or Countervailing Duty Order, Finding, or Suspended Investigation* 66 FR 34910 (July 2, 2001).

On July 31, 2001, Ugine, a French producer and exporter of subject merchandise, and the Petitioners requested that the Department conduct a review of sales or entries of merchandise subject to the Department's antidumping duty order on SSSS from France. On October 1, 2001, in accordance with section 751(a) of the Act, the Department published in the **Federal Register** a notice of initiation of this antidumping duty administrative review for the period July 1, 2000 through June 30, 2001. *See Initiation of Antidumping and Countervailing Duty Administrative Reviews and Requests for Revocation in Part*, 66 FR 49924 (October 1, 2001).

On November 16, 2001, Ugine reported that it made sales of subject merchandise to the United States during

the period of review in its response to Section A of the Department's questionnaire. On December 21, 2001, Ugine submitted its responses to Sections B, C, D, and E of the Department's questionnaire. On January 29, 2002, the Department issued a supplemental questionnaire for Sections A, B, C, D, and E of Ugine's questionnaire responses. On February 19, 2002, the Department published an extension of time limit for the preliminary results of the antidumping duty administrative review. *See Extension of Time Limit for the Preliminary Results of the Antidumping Duty Administrative Review of Stainless Steel Sheet and Strip in Coil from France*, 67 FR 7357 (February 19, 2002). On February 26, 2002, Ugine submitted its response to the Department's Sections B, C, D, and E supplemental questionnaire. On March 12, 2002, the Department issued a supplemental questionnaire regarding affiliates customers in the home market. On March 19, 2002, Ugine submitted its response to this questionnaire. On March 25, 2002, the Department issued another supplemental questionnaire regarding the affiliated customers in the home market. On April 3, 2002, Ugine submitted its response to the second supplemental questionnaire regarding affiliated customers in the home market. On April 30, 2002, the Department issued a second supplemental questionnaire for Sections A, B, C, D, and E of Ugine's questionnaire responses. On May 13, 2002, Ugine submited its response to the second supplemental questionnaire for Sections A, B, C, D, and E. On May 31, 2002, the Department issued a supplemental questionnaire to Ugine regarding the reporting of certain affiliated customers' downstream sales. Their response was due by COB June 7, 2002; however, Ugine did not submit a response.

Verification

As provided in section 782(i)(3) of the Act, we verified the information submitted by Ugine for use in our preliminary results. We used standard verification procedures, including examination of relevant accounting and production records and original source documents provided by Ugine. We verified Ugine's U.S. subsidiary, Hague Steel Corp. (''Hague''), from May 20, 2002 through May 24, 2002. Additionally, we verified sales and cost information provided by Ugine from June 10, 2002 through June 21, 2002. Our verification results are outlined in the public version of the verification report and are on file in the Central Records Unit (''CRU'') located in room B–099 of the main Department of Commerce Building, 14th Street and Constitution Avenue, NW., Washington, DC. *See Memorandum from Alex Villanueva and Jonathan Herzog, Case Analysts through James C. Doyle, Program Manager, to the File: Verification Report of the Second Administrative Review of Stainless Steel Sheet and Strip from France—United States Sales and Cost Verification Report of Hague Steel Corporation* (''*U.S. Verification Report*''), dated July 31, 2002, and *Memorandum from Alex Villanueva, Case Analyst through James C. Doyle, Program Manager, to the File: Verification Report of the Second Administrative Review of Stainless Steel Sheet and Strip from France—Home Market Sales and Cost Verification Report of Ugine, S.A., (''Home Market Verification Report'')*, dated July 31, 2002.

Period of Review

The period of review (''POR'') is July 1, 2000 through June 30, 2001.

Scope of Review

For purposes of this administrative review, the products covered are certain stainless steel sheet and strip in coils. Stainless steel is an alloy steel containing, by weight, 1.2 percent or less of carbon and 10.5 percent or more of chromium, with or without other elements. The subject sheet and strip is a flat-rolled product in coils that is greater than 9.5 mm in width and less than 4.75 mm in thickness, and that is annealed or otherwise heat treated and pickled or otherwise descaled. The subject sheet and strip may also be further processed (*e.g.,* cold-rolled, polished, aluminized, coated, *etc.*) provided that it maintains the specific dimensions of sheet and strip following such processing.

The merchandise subject to this order is currently classifiable in the *Harmonized Tariff Schedule of the United States* (''HTS'') at subheadings: 7219.13.0031, 7219.13.0051, 7219.13.0071, 7219.1300.81,[1] 7219.14.0030, 7219.14.0065, 7219.14.0090, 7219.32.0005, 7219.32.0020, 7219.32.0025, 7219.32.0035, 7219.32.0036, 7219.32.0038, 7219.32.0042, 7219.32.0044, 7219.33.0005, 7219.33.0020, 7219.33.0025, 7219.33.0035, 7219.33.0036, 7219.33.0038, 7219.33.0042, 7219.33.0044, 7219.34.0005, 7219.34.0020, 7219.34.0025, 7219.34.0030, 7219.34.0035, 7219.35.0005, 7219.35.0015, 7219.35.0030, 7219.35.0035, 7219.90.0010, 7219.90.0020, 7219.90.0025, 7219.90.0060, 7219.90.0080, 7220.12.1000, 7220.12.5000, 7220.20.1010, 7220.20.1015, 7220.20.1060, 7220.20.1080, 7220.20.6005, 7220.20.6010, 7220.20.6015, 7220.20.6060, 7220.20.6080, 7220.20.7005, 7220.20.7010, 7220.20.7015, 7220.20.7060, 7220.20.7080, 7220.20.8000, 7220.20.9030, 7220.20.9060, 7220.90.0010, 7220.90.0015, 7220.90.0060, and 7220.90.0080. Although the HTS subheadings are provided for convenience and Customs purposes, the Department's written description of the merchandise under review is dispositive.

Excluded from the review of this order are the following: (1) Sheet and strip that is not annealed or otherwise heat treated and pickled or otherwise descaled, (2) sheet and strip that is cut to length, (3) plate (*i.e.,* flat-rolled stainless steel products of a thickness of 4.75 mm or more), (4) flat wire (*i.e.,* cold-rolled sections, with a prepared edge, rectangular in shape, of a width of not more than 9.5 mm), and (5) razor blade steel. Razor blade steel is a flat-rolled product of stainless steel, not further worked than cold-rolled (cold-reduced), in coils, of a width of not more than 23 mm and a thickness of 0.266 mm or less, containing, by weight, 12.5 to 14.5 percent chromium, and certified at the time of entry to be used in the manufacture of razor blades. *See* Chapter 72 of the HTS, ''Additional U.S. Note'' 1(d).

Flapper valve steel is also excluded from the scope of the order. This product is defined as stainless steel strip in coils containing, by weight, between 0.37 and 0.43 percent carbon, between 1.15 and 1.35 percent molybdenum, and between 0.20 and 0.80 percent manganese. This steel also contains, by weight, phosphorus of 0.025 percent or less, silicon of between 0.20 and 0.50 percent, and sulfur of 0.020 percent or less. The product is manufactured by means of vacuum arc remelting, with inclusion controls for sulphide of no more than 0.04 percent and for oxide of no more than 0.05 percent. Flapper valve steel has a tensile strength of between 210 and 300 ksi, yield strength of between 170 and 270 ksi, plus or minus 8 ksi, and a hardness (Hv) of between 460 and 590. Flapper valve steel is most commonly used to produce specialty flapper valves in compressors.

Also excluded is a product referred to as suspension foil, a specialty steel

[1] Due to changes to the HTS numbers in 2001, 7219.13.0030, 7219.13.0050, 7219.13.0070, and 7219.13.0080 are now 7219.13.0031, 7219.13.0051, 7219.13.0071, and 7219.13.0081, respectively.

product used in the manufacture of suspension assemblies for computer disk drives. Suspension foil is described as 302/304 grade or 202 grade stainless steel of a thickness between 14 and 127 microns, with a thickness tolerance of plus-or-minus 2.01 microns, and surface glossiness of 200 to 700 percent Gs. Suspension foil must be supplied in coil widths of not more than 407 mm, and with a mass of 225 kg or less. Roll marks may only be visible on one side, with no scratches of measurable depth. The material must exhibit residual stresses of 2 mm maximum deflection, and flatness of 1.6 mm over 685 mm length.

Certain stainless steel foil for automotive catalytic converters is also excluded from the scope of this order. This stainless steel strip in coils is a specialty foil with a thickness of between 20 and 110 microns used to produce a metallic substrate with a honeycomb structure for use in automotive catalytic converters. The steel contains, by weight, carbon of no more than 0.030 percent, silicon of no more than 1.0 percent, manganese of no more than 1.0 percent, chromium of between 19 and 22 percent, aluminum of no less than 5.0 percent, phosphorus of no more than 0.045 percent, sulfur of no more than 0.03 percent, lanthanum of less than 0.002 or greater than 0.05 percent, and total rare earth elements of more than 0.06 percent, with the balance iron.

Permanent magnet iron-chromium-cobalt alloy stainless strip is also excluded from the scope of this order. This ductile stainless steel strip contains, by weight, 26 to 30 percent chromium, and 7 to 10 percent cobalt, with the remainder of iron, in widths 228.6 mm or less, and a thickness between 0.127 and 1.270 mm. It exhibits magnetic remanence between 9,000 and 12,000 gauss, and a coercivity of between 50 and 300 oersteds. This product is most commonly used in electronic sensors and is currently available under proprietary trade names such as ''Arnokrome III.'' [2]

Certain electrical resistance alloy steel is also excluded from the scope of this order. This product is defined as a non-magnetic stainless steel manufactured to American Society of Testing and Materials (ASTM) specification B344 and containing, by weight, 36 percent nickel, 18 percent chromium, and 46 percent iron, and is most notable for its resistance to high temperature corrosion. It has a melting point of 1390 degrees Celsius and displays a creep rupture limit of 4 kilograms per square millimeter at 1000 degrees Celsius. This steel is most commonly used in the production of heating ribbons for circuit breakers and industrial furnaces, and in rheostats for railway locomotives. The product is currently available under proprietary trade names such as ''Gilphy 36.'' [3]

Certain martensitic precipitation-hardenable stainless steel is also excluded from the scope of this order. This high-strength, ductile stainless steel product is designated under the Unified Numbering System (UNS) as S45500-grade steel, and contains, by weight, 11 to 13 percent chromium, and 7 to 10 percent nickel. Carbon, manganese, silicon and molybdenum each comprise, by weight, 0.05 percent or less, with phosphorus and sulfur each comprising, by weight, 0.03 percent or less. This steel has copper, niobium, and titanium added to achieve aging, and will exhibit yield strengths as high as 1700 Mpa and ultimate tensile strengths as high as 1750 Mpa after aging, with elongation percentages of 3 percent or less in 50 mm. It is generally provided in thicknesses between 0.635 and 0.787 mm, and in widths of 25.4 mm. This product is most commonly used in the manufacture of television tubes and is currently available under proprietary trade names such as ''Durphynox 17.'' [4]

Finally, three specialty stainless steels typically used in certain industrial blades and surgical and medical instruments are also excluded from the scope of this order. These include stainless steel strip in coils used in the production of textile cutting tools (*e.g.,* carpet knives). [5] This steel is similar to AISI grade 420 but containing, by weight, 0.5 to 0.7 percent of molybdenum. The steel also contains, by weight, carbon of between 1.0 and 1.1 percent, sulfur of 0.020 percent or less, and includes between 0.20 and 0.30 percent copper and between 0.20 and 0.50 percent cobalt. This steel is sold under proprietary names such as ''GIN4 Mo.'' The second excluded stainless steel strip in coils is similar to AISI 420–J2 and contains, by weight, carbon of between 0.62 and 0.70 percent, silicon of between 0.20 and 0.50 percent, manganese of between 0.45 and 0.80 percent, phosphorus of no more than 0.025 percent and sulfur of no more than 0.020 percent. This steel has a carbide density on average of 100 carbide particles per 100 square microns. An example of this product is ''GIN5'' steel. The third specialty steel has a chemical composition similar to AISI 420 F, with carbon of between 0.37 and 0.43 percent, molybdenum of between 1.15 and 1.35 percent, but lower manganese of between 0.20 and 0.80 percent, phosphorus of no more than 0.025 percent, silicon of between 0.20 and 0.50 percent, and sulfur of no more than 0.020 percent. This product is supplied with a hardness of more than Hv 500 guaranteed after customer processing, and is supplied as, for example, ''GIN6.'' [6]

Normal Value Comparisons

To determine whether Ugine's sales of subject merchandise from France to the United States were made at less than fair value, we compared the constructed export price (''CEP'') to the normal value (''NV''), as described in the ''Constructed Export Price'' and ''Normal Value'' sections of this notice, below. In accordance with section 777A(d)(2) of the Act, we calculated monthly weighted-average prices for NV and compared these to individual CEP transactions.

Transactions Reviewed

A. Home Market Viability

In accordance with section 773(a)(1)(C) of the Act, to determine whether there was sufficient volume of sales in the home market to serve as a viable basis for calculating NV (*i.e.,* the aggregate volume of home market sales of the foreign like product is greater than or equal to five percent of the aggregate volume of U.S. sales), we compared Ugine's volume of home market sales of the foreign like product to the volume of U.S. sales of the subject merchandise. Pursuant to sections 773(a)(1)(B) and (C) of the Act, because Ugine's aggregate volume of home market sales of the foreign like product was greater than five percent of its aggregate volume of U.S. sales for the subject merchandise, we determined that the home market was viable.

B. Arm's Length Test

Ugine reported that it made sales in the home market to affiliated end users and resellers during the POR. Sales to affiliated customers in the home market not made at arm's length were excluded from our analysis. To test whether these sales were made at arm's length, we compared the starting prices of sales to affiliated and unaffiliated customers net of all movement charges, direct selling expenses, discounts and packing. Where prices to the affiliated party were on

[2] ''Arnokrome III'' is a trademark of the Arnold Engineering Company.

[3] ''Gilphy 36'' is a trademark of Imphy, S.A.

[4] ''Durphynox 17'' is a trademark of Imphy, S.A.

[5] This list of uses is illustrative and provided for descriptive purposes only.

[6] ''GIN4 Mo,'' ''GIN5'' and ''GIN6'' are the proprietary grades of Hitachi Metals America, Ltd.

average 99.5 percent or more of the price to the unrelated party, we determined that sales made to the related party were at arm's length. Where no affiliated customer ratio could be calculated because identical merchandise was not sold to unaffiliated customers, we were unable to determine that these sales were made at arm's length and, therefore, excluded them from our analysis. *See, e.g., Notice of Preliminary Results of Antidumping Duty Administrative Review: Stainless Steel Plate in Coils from Italy,* 67 FR 39677, 39679 (June 10, 2002). Where the exclusion of such sales eliminated all sales of the most appropriate comparison product, we made comparisons to the next most similar model. In our home market NV calculation, we have included Ugine's sales to certain of its affiliated customers because these entities passed the Department's arm's length test criteria. Conversely, certain other affiliated customers did not pass the arm's length test and have therefore been excluded from our home market NV calculation. For a further discussion of home market sales made by Ugine to one affiliated reseller who failed the arm's length test, please see the ''Facts Available'' section below.

Product Comparisons

In accordance with section 771(16) of the Act, we considered all SSSS products produced by Ugine, covered by the description in the ''Scope of Review'' section of this notice, *supra,* and sold in the home market during the POR to be foreign like products for the purpose of determining appropriate product comparisons to SSSS products sold in the United States. We have relied on nine characteristics to match U.S. sales of subject merchandise to comparison sales of the foreign like product (listed in order of preference): grade, hot/cold rolled, gauge, finish, metallic coating, non-metallic coating, width, tempered/tensile strength, and edge trim.

Constructed Export Price

In accordance with section 772(a) of the Act, export price (''EP'') is the price at which the subject merchandise is first sold (or agreed to be sold) before the date of importation by the producer or exporter of the subject merchandise outside of the United States to an unaffiliated purchaser in the United States or to an unaffiliated purchaser for exportation to the United States. In accordance with section 772(b) of the Act, CEP is the price at which the subject merchandise is first sold (or agreed to be sold) in the United States before or after the date of importation by or for the account of the producer or exporter of such merchandise or by a seller affiliated with the producer or exporter, to a purchaser not affiliated with the producer or exporter.

For purposes of this review, Ugine classified all of its reported sales of SSSS as CEP sales. During the review period Ugine made sales to the United States through its two U.S. based affiliates, Usinor Stainless USA and Hague, which then resold the merchandise to unaffiliated customers. According to Ugine, Usinor Stainless USA serves as a national ''super-distributor'' for Ugine in the U.S. market. Hague is an affiliated customer in the United States which further manufactured the SSSS before selling to unaffiliated customers. Therefore, because Ugine's U.S. sales were made by Usinor Stainless USA and Hague after the subject merchandise was imported into the United States, it is appropriate to classify these sales as CEP sales.

We calculated the CEP in accordance with section 772(b) of the Act. We based CEP on the packed ex-warehouse or delivered prices to unaffiliated purchasers in the United States. We also made deductions for the following movement expenses, where appropriate, in accordance with section 772(c)(2)(A) of the Act: inland freight from plant to distribution warehouse, international freight, marine insurance, U.S. inland freight from port to warehouse, U.S. inland freight from warehouse/plant to the unaffiliated customer, U.S. warehouse expenses, other U.S. transportation expense, and U.S. Customs duties. In accordance with section 772(d)(1) of the Act, we deducted selling expenses associated with economic activities occurring in the United States, including direct selling expenses, inventory carrying costs, discounts, credit, warranty expenses, commissions and other indirect selling expenses.

For products that were further manufactured after importation, we adjusted for all costs of further manufacturing in the United States in accordance with section 772(d)(2) of the Act. We deducted the profit allocated to expenses deducted under section 772(d)(1) and (d)(2) in accordance with sections 772(d)(3) and 772(f) of the Act. In accordance with section 772(f) of the Act, we computed profit based on total revenues realized on sales in both the U.S. and home markets, less all expenses associated with those sales. We then allocated profit to expenses incurred with respect to U.S. economic activity (including further manufacturing costs), based on the ratio of total U.S. expenses to total expenses for both the U.S. and home market. We also adjusted the starting price for billing adjustments.

Normal Value

After testing home market viability and whether home market sales were at below-cost prices, we calculated NV as noted in the ''Price-to-Constructed Value (''CV'') Comparison'' and ''Price-to-Price Comparisons'' section of this notice.

Cost of Production Analysis

Because we disregarded sales below the cost of production in the first antidumping duty administrative review of SSSS from France, the two recently completed segment of these proceedings, we have reasonable grounds to believe or suspect that sales by Ugine in its home market were made at prices below the cost of production (''COP''), pursuant to section 773(b)(1) of the Act. *See Notice of Final Determination of Sales at Less Than Fair Value: Stainless Steel Sheet and Strip in Coils from France,* 64 FR 308204 (June 8, 1999) (''*LTFV Final*'') and *Notice of Final Results of Antidumping Duty Administrative Review: Stainless Steel Sheet and Strip in Coils from France,* 67 FR 6493 (February 12, 2002). Therefore, pursuant to section 773 (b)(1) of the Act, we conducted a COP analysis of home market sales by Ugine as described below.

A. Calculation of COP

In accordance with section 773(b)(3) of the Act, we calculated a weighted-average COP based on the sum of Ugine's cost of materials and fabrication for the foreign like product, plus amounts for selling, general and administrative expenses (''SG&A''), including interest expenses, and packing costs. We relied on the COP data submitted by Ugine in its original and supplemental cost questionnaire responses. For these preliminary results, we did not make any adjustments to Ugine's submitted costs.

B. Test of Home Market Prices

We compared the weighted-average COP for Ugine to home market sales of the foreign like product, as required under section 773(b) of the Act, in order to determine whether these sales had been made at prices below the COP. In determining whether to disregard home market sales made at prices below the COP, we examined whether such sales were made (1) within an extended period of time in substantial quantities,

and (2) at prices which permitted the recovery of all costs within a reasonable period of time in the normal course of trade, in accordance with section 773(b)(1)(A) and (B) of the Act. On a product-specific basis, we compared the COP to home market prices, less any applicable billing adjustments, movement charges, discounts, and direct and indirect selling expenses.

C. Results of the COP Test

Pursuant to section 773(b)(2)(C) of the Act, where less than 20 percent of Ugine's sales of a given product were at prices less than the COP, we did not disregard any below-cost sales of that product because we determined that the below-cost sales were not made in ''substantial quantities.'' Where 20 percent or more of Ugine's sales of a given product during the POR were at prices less than the COP, we determined that such sales have been made in ''substantial quantities'' within an extended period of time, in accordance with section 773(b)(2)(B) of the Act. In such cases, because we use POR average costs, we also determined that such sales were not made at prices which would permit recovery of all costs within a reasonable period of time, in accordance with section 773(b)(2)(D) of the Act. Therefore, we disregarded the below-cost sales.

D. Calculation of Constructed Value

In accordance with section 773(e)(1) of the Act, we calculated CV based on the sum of Ugine's cost of materials, fabrication, SG&A (including interest expenses), U.S. packing costs, and profit. In accordance with section 773(e)(2)(A) of the Act, we based SG&A and profit on the amounts incurred and realized by Ugine in connection with the production and sale of the foreign like product in the ordinary course of trade, for consumption in the foreign country. For selling expenses, we used the actual weighted-average home market direct and indirect selling expenses.

Price-to-CV Comparisons

In accordance with section 773(a)(4) of the Act, we based NV on CV if we were unable to find a home market match of identical or similar merchandise. Where appropriate, we made adjustments to CV in accordance with section 773(a)(8) of the Act. We deducted from CV the weighted-average home market direct selling expenses.

Price-to-Price Comparisons

For those product comparisons for which there were sales at prices above the COP, we based NV on prices to home market customers or prices to affiliated customers that were determined to be at arm's length. Where appropriate, we deducted discounts, rebates, credit expenses, warranty expenses, inland freight, inland insurance, and warehousing expense. We also adjusted the starting price for billing adjustments. We also made adjustments, where applicable, for home market indirect selling expenses to offset U.S. commissions in CEP comparisons.

We made adjustments, where appropriate, for physical differences in the merchandise in accordance with section 773(a)(6)(C)(ii) of the Act. Additionally, in accordance with section 773(a)(6), we deducted home market packing costs and added U.S. packing costs. In accordance with the Department's practice, where all contemporaneous matches to a U.S. sale observation resulted in difference-in-merchandise adjustments exceeding 20 percent of the cost of manufacturing (''COM'') of the U.S. product, we based NV constructed value.

For reasons discussed below in the ''Level of Trade'' section below, we allowed a CEP offset for comparisons made at different levels of trade. To calculate the CEP offset, we deducted the home market indirect selling expenses from NV for home market sales that were compared to U.S. CEP sales. We limited the home market indirect selling expense deduction by the amount of the indirect selling expenses deducted in calculating the CEP as required under section 772(d)(1)(D) of the Act.

Level of Trade

In accordance with section 773(a)(1)(B) of the Act, to the extent practicable, we determine NV based on sales in the comparison market at the same level of trade (''LOT'') as the CEP transaction. The NV LOT is that of the starting-price sales in the comparison market, or when NV is based on CV, that of the sales from which we derive SG&A expenses and profit. For CEP, it is the level of the constructed sale from the exporter to the importer.

To determine whether NV sales are at a different LOT than CEP, we examine stages in the marketing process and selling functions along the chain of distribution between the producer and the unaffiliated customer. If the comparison market sales are at a different LOT, and the difference affects price comparability as manifested in a pattern of consistent price differences between the sales on which NV is based and comparison market sales at the LOT of the export transaction, we make a LOT adjustment under section 773(a)(7)(A) of the Act. Finally, for CEP sales, if the NV level is more remote from the factory than the CEP level and there is no basis for determining whether the difference in levels between NV and CEP affects price comparability, we adjust NV under section 773(a)(7)(B) of the Act (the CEP offset provision). *See, e.g., Notice of Final Determination of Sales at Less Than Fair Value: Certain Cut-to-Length Carbon Steel Plate from South Africa,* 62 FR 61731, 61732 (November 19, 1997).

In reviewing the selling functions reported by the respondent, we examined all types of selling functions and activities reported in the respondent's questionnaire responses on LOT and during verification. In analyzing whether separate LOTs existed in this review, we found that no single selling function was sufficient to warrant a separate LOT in the home market. *See Antidumping Duties; Countervailing Duties, Final Rule,* 62 FR 27296, 27371 (May 19, 1997). However, based on a comparison of all selling functions performed for sales through affiliated parties to all selling functions performed for unaffiliated customers, we have preliminarily determined that Ugine sold merchandise at two LOTs in the home market during the POR. One LOT involved sales made through two channels: sales by Ugine directly to unaffiliated service centers or end users (Channel 1) and sales made by Ugine with the assistance of Ugine France Service in its capacity as sales agent, to unaffiliated end users (Channel 2). Additionally, the second LOT involved sales to affiliated parties made through two additional channels: sales from Ugine to its affiliate, IUP, for subsequent resales by IUP to unaffiliated end users and service centers (Channel 3) and sales from Ugine to its affiliate, IUP, for resale, with the assistance of Ugine France Service in its capacity as sales agent, to unaffiliated end users (Channel 4). From our analysis of the marketing process for these sales, we have determined that there are significant distinctions in selling activities between Ugine's sales to its affiliate in Channels 3 and 4 and its direct sales through Channels 1 or 2. *See Memorandum from Alex Villanueva, Case Analyst to the File through James C, Doyle, Program Manager, Second Antidumping Duty Administrative Review of Stainless Steel Sheet and Strip from France: Level of Trade Analysis,* dated July 31, 2002 (''LOT Memorandum''), on file in Import Administration's Central Records Unit, Room B–099, U.S. Department of Commerce, 14th &

Constitution Avenue, NW., Washington, DC. Based on these differences, we preliminarily concluded that two LOTs existed in the home market during the POR.

In order to determine the LOTs of the U.S. market, we reviewed the selling activities associated with each reported channel of distribution. Ugine only reported CEP sales in the U.S. market. Because all of Ugine's CEP sales in the U.S. market were made through Usinor Stainless USA and Hague, we found that there was one LOT in the U.S. market. For these CEP sales, we determined that fewer and different selling functions were performed for CEP sales to Usinor Stainless USA than for sales at either of the home market LOTs. In addition, we found that sales at both home market LOTs were at a more advanced stage of distribution compared to the CEP sales. *See LOT Memorandum* at 10.

We examined whether a LOT adjustment was appropriate. The Department makes this adjustment when it is demonstrated that a difference in LOTs affects price comparability. However, where the available data do not provide an appropriate basis upon which to determine a LOT adjustment, and where the NV is established at a LOT that is at a more advanced stage of distribution than the LOT of the CEP transactions, we adjust NV under section 773(a)(7)(B) of the Act (the CEP offset provision). We were unable to quantify the LOT adjustment in accordance with section 773(a)(7)(A) of the Act, as we found that neither of the LOTs in the home market matched the LOT of the CEP transactions. Because of this, we did not calculate a LOT adjustment. Instead, a CEP offset was applied to the NV-CEP comparisons. *See LOT Memo* at 8. In the most recent administrative review of this order, where a similar fact pattern existed, we also granted a CEP offset. *See Notice of Final Results of Antidumping Duty Administrative Review: Stainless Steel Sheet and Strip in Coils from France and accompanying Issues and Decision Memorandum* 67 FR 6493 (February 12, 2002) at Comment 8.

Facts Available

We preliminarily determine that the use of facts available is appropriate for two elements of Ugine's dumping margin calculation. Section 776(a)(2) of the Act provides that if an interested party: (A) Withholds information that has been requested by the Department; (B) fails to provide such information in a timely manner or in the form or manner requested, subject to subsections 782(c)(1) and (e) of the Act; (C) significantly impedes a determination under the antidumping statute; or (D) provides such information but the information cannot be verified, the Department shall, subject to subsection 782(d) of the Act, use facts otherwise available in reaching the applicable determination.

In this case, at the verification of Ugine's sales information from June 10, 2002 through June 21, 2002, Ugine presented as a minor correction a very small number of previously unreported home market sales. The information Ugine supplied and accepted by the Department included the total sales value and the total weight in kilograms. *See Home Market Verification Report* at 3.

We have preliminarily determined that the use of neutral facts available, in accordance with section 776(a) of the Act, is warranted for these unreported home market sales. This unreported home market sales information should have been reported in the respondent's questionnaire responses. By failing to report these sales until the beginning of verification, the respondent prevented the Department from gathering and verifying further information necessary to its analysis. However, during verification, we noted that the total volume of unreported sales constituted less than one percent of total home market sales. Furthermore, Ugine volunteered the unreported sales information prior to the beginning of verification and the Department did not discover additional unreported sales or otherwise find that the respondent was uncooperative. Therefore, for these reasons, we are applying neutral facts available to the unreported sales information. As facts available, the Department has not considered these unreported home market sales in its dumping analysis.

Additionally, consistent with section 776(a)(2)(A) and (C) of the Act, we preliminarily determine that use of partial adverse facts available is warranted for home market sales made to an affiliated reseller who failed the arm's length test. On January 29, 2002, the Department sent Ugine a supplemental questionnaire requesting the downstream sales for all known affiliated customers and resellers who purchased the subject merchandise in the home market during the POR. On February 6, 2002, Ugine submited a letter arguing that if the Department applies one of the criteria outlined in the letter, resales by affiliated customers need not be reported. One of these criteria specifically stated that if the customers passed the arm's length test, then there was no need to report those customers' downstream sales. On February 26, 2002, Ugine submitted its Sections B–E supplemental questionnaire response, but did not include downstream sales for any affiliated customers. On May 31, 2002, the Department requested downstream sales for a smaller number of affiliated resellers, which included the affiliated customer who failed the arm's length test. To date, Ugine has not provided the downstream sales for any customer, including that affiliated customer. Therefore, consistent with section 776(a)(2)(A) and (C) of the Act, Ugine withheld information that had been requested by the Department, failed to provide such information in a timely manner, and significantly impeded the determination under the antidumping statute, justifying the use facts otherwise available in reaching the applicable determination. In addition, section 776(b) of the Act provides that, if the Department finds that an interested party ''has failed to cooperate to the best of its ability to comply with a request for information,'' the Department may use information that is adverse to the interests of that party as facts available otherwise available. In this case, Ugine failed to provide its downstream sales made by affiliated resellers as requested in the Department's February 26, 2002, and May 31, 2002, letters to Ugine.

In selecting from facts otherwise available, for these preliminary results, for those sales to the affiliated reseller that failed the arm's length test, for which Ugine did not provide downstream sales, the Department used the highest gross unit price of an identical model purchased by another affiliated customer. For that customer's sales of models that were not sold to other affiliated customers, we applied the highest gross unit price for those models with a match. The Department applied similar facts available in a recent investigation. *See Notice of Preliminary Determination of Sales at Less Than Fair Value: Certain Cold-Rolled Carbon Steel Flat Products from France,* 67 FR 31204 (May 9, 2002).

Currency Conversion

For purposes of the preliminary results, we made currency conversions in accordance with section 773A of the Act, based on the official exchange rates in effect on the dates of the U.S. sales as certified by the Federal Reserve Bank of New York. Section 773A(a) of the Act directs the Department to use the daily exchange rate in effect on the date of sale in order to convert foreign currencies into U.S. dollars, unless the daily rate involves a ''fluctuation.'' In accordance with the Department's

practice, we have determined as a general matter that a fluctuation exists when the daily exchange rate differs from a benchmark by 2.25 percent. *See, e.g., Certain Stainless Steel Wire Rods from France; Preliminary Results of Antidumping Duty Administrative Review,* 61 FR 8915, 8918 (March 6, 1998), and Policy Bulletin 96–1: Currency Conversions, 61 FR 9434 (March 8, 1996). The benchmark is defined as the rolling average of rates for the past 40 business days. When we determine a fluctuation exists, we substitute the benchmark for the daily rate.

Preliminary Results of Review

As a result of this review, we preliminarily determine that the following weighted-average dumping margin exists:

STAINLESS STEEL SHEET AND STRIP IN COILS FROM FRANCE

Producer/manufacturer/exporter	Weighted-average margin (in percent)
Ugine	1.64

Pursuant to 19 CFR 351.224, the Department will disclose to any party to the proceeding, within ten days of publication of this notice, the calculations performed. Any interested party may request a hearing within 30 days of publication. Any hearing, if requested, will be held 37 days after the date of publication, or the first working day thereafter. Interested parties may submit case briefs and/or written comments no later than 30 days after the date of publication. Rebuttal briefs and rebuttals to written comments, limited to issues raised in such briefs or comments, may be filed no later than 35 days after the date of publication. Parties who submit arguments are requested to submit with the argument: (1) A statement of the issue, (2) A brief summary of the argument and (3) a table of authorities. Further, the Department requests that parties submitting written comments provide the Department with an additional copy of the public version of any such comments on a computer diskette. The Department will publish the final results of this administrative review, which will include the results of its analysis of issues raised in any such written comments or at a hearing, within 120 days after the publication of this notice.

Assessment

Upon issuance of the final results of review, the Department shall determine, and Customs shall assess, antidumping duties on all appropriate entries. The Department will issue appraisement instructions directly to Customs. The final results of this review shall be the basis for the assessment of antidumping duties on entries of merchandise covered by the results and for future deposits of estimated duties. For duty assessment purposes, we calculated an importer-specific assessment rate by dividing the total dumping margins calculated for the U.S. sales to the importer by the total entered value of these sales. This rate will be used for the assessment of antidumping duties on all entries of the subject merchandise by that importer during the POR.

Cash Deposits

The following deposit requirements will be effective upon completion of the final results of this administrative review for all shipments of the subject merchandise entered, or withdrawn from warehouse, for consumption on or after the publication of the final results of this administrative review, as provided in section 751(a)(1) of the Act: (1) The cash deposit rate for Ugine will be that established in the final results of this review; (2) for previously reviewed or investigated companies not covered in this review, the cash deposit rate will continue to be the company-specific rate published for the most recent period; (3) if the exporter is not a firm covered in this review, a prior review, or the original LTFV investigation, but the manufacturer is, the cash deposit rate will be the rate established in the most recent period for the manufacturer of the merchandise; and (4) if neither the exporter nor the manufacturer is a firm covered in this or any previous review conducted by the Department, the cash deposit rate will continue to be the ''all other'' rate established in the LTFV investigation, which was 9.38 percent. *See Antidumping Duty Order,* at 40565.

Notification to Interested Parties

This notice serves as a preliminary reminder to importers of their responsibility under regulation 19 CFR 351.402(f) to file a certificate regarding the reimbursement of antidumping duties prior to liquidation of the relevant entries during this review period. Failure to comply with this requirement could result in the Secretary's presumption that reimbursement of antidumping duties occurred and the subsequent assessment of double antidumping duties.

This administrative review and notice is published in accordance with sections 751(a)(1) and 777(i)(1) of the Act.

Dated: July 31, 2002.

Faryar Shirzad,

Assistant Secretary for Import Administration.

[FR Doc. 02–19990 Filed 8–6–02; 8:45 am]

BILLING CODE 3510–DS–P

DEPARTMENT OF COMMERCE

International Trade Administration

[A–580–834]

Stainless Steel Sheet and Strip in Coils From the Republic of Korea: Preliminary Results of Antidumping Duty Administrative Review and Intent To Rescind in Part

AGENCY: Import Administration, International Trade Administration, Department of Commerce.

ACTION: Notice of preliminary results and partial rescission of antidumping duty administrative review of stainless steel sheet and strip in coils from the Republic of Korea.

SUMMARY: The Department of Commerce (''the Department'') is conducting an administrative review of the antidumping duty order on stainless steel sheet and strip in coils (''SSSS'') from the Republic of Korea in response to a request from respondents Pohang Iron & Steel Co., Ltd. (''POSCO''), Samwon Precision Metals Co., Ltd. (''Samwon''), Daiyang Metal Co., Ltd. (''DMC''), and petitioners,[1] who requested a review of POSCO and DMC. This review covers imports of subject merchandise from POSCO and DMC. The period of review (''POR'') is July 1, 2000, through June 30, 2001.

Our preliminary results of review indicate that POSCO and DMC have sold the subject merchandise at less than normal value (''NV'') during the POR. We have also preliminarily determined to rescind the review with respect to Samwon because the evidence on the record indicates that Samwon had no shipments of subject merchandise to the United States during the POR. If these preliminary results are adopted in our final results of review, we will instruct the U.S. Customs Service to assess antidumping duties on entries of POSCO's and DMC's subject merchandise during the POR, in accordance with Sections 19 CFR 351.106 and 351.212(b) of the Department's regulations.

[1] Allegheny Ludlum, AK Steel Corporation (formerly Armco, Inc.), J&L Specialty Steel, Inc., North American Stainless, Butler-Armco Independent Union, Zanesville Armco Independent Union, and the United Steelworkers of America, AFL–CIO/CLC.

We invite interested parties to comment on these preliminary results. Parties who submit arguments in this segment of the proceeding should also submit with each argument (1) a statement of the issue and (2) a brief summary of the argument.

EFFECTIVE DATE: August 7, 2002.

FOR FURTHER INFORMATION CONTACT: Laurel LaCivita (POSCO and Samwon), Lilit Astvatsatrian (DMC), or Robert Bolling, Import Administration, International Trade Administration, U.S. Department of Commerce, 14th and Constitution Avenue, NW., Washington, DC 20230; telephone: (202) 482–4243, (202) 482–6412, or (202) 482–3434, respectively.

SUPPLEMENTARY INFORMATION:

The Applicable Statute and Regulations

Unless otherwise indicated, all citations to the Tariff Act of 1930, as amended (''the Act''), are references to the provisions effective January 1, 1995, the effective date of the amendments made to the Act by the Uruguay Round Agreements Act (''URAA''). In addition, unless otherwise indicated, all citations to the Department's regulations are to the regulations codified at 19 CFR part 351 (2001).

Background

On July 2, 2001, the Department published in the **Federal Register** a notice of ''Opportunity to Request Administrative Review'' of the antidumping duty order on stainless steel sheet and strip in coils from the Republic of Korea. *See Notice of Opportunity to Request Administrative Review of Antidumping or Countervailing Duty Order, Finding, or Suspended Investigation,* 66 FR 34910 (July 2, 2001), as corrected, 66 FR 38455 (July 24, 2001). On July 31, 2001, petitioners requested a review of POSCO and DMC in accordance with 19 CFR 351.213(b)(1). Also, on July 31, 2000, POSCO, Samwon, and DMC, producers and exporters of subject merchandise during the POR, in accordance with 19 CFR 351.213(b)(2), each requested administrative reviews of the antidumping order covering the period July 1, 2000, through June 30, 2001. On August 20, 2001, the Department published in the **Federal Register** a notice of initiation of administrative review of this order. *See Initiation of Antidumping and Countervailing Duty Administrative Reviews and Requests for Revocation in Part,* 66 FR 43570 (August 20, 2001).

On August 27, 2001, Samwon informed the Department that it made no shipments of subject merchandise to the United States during the POR. We have confirmed this information with the U.S. Customs Service. For further discussion, see the ''Partial Rescission of Review'' section of this notice, below.

On August 29, 2001, the Department issued questionnaires for this review to POSCO and DMC. POSCO and DMC submitted Section A questionnaire responses on October 3, 2001. On November 5, 2001, POSCO submitted its Sections B through D questionnaire responses and DMC submitted its Sections B through E questionnaire responses. POSCO submitted its cost reconciliation on November 5, 2001, in the context of the Section D response, and DMC submitted its cost reconciliation on November 19, 2001.

On October 23, 2001, DMC requested that the Department adjust DMC's cost reporting period to conform more closely with its fiscal year reporting period. On October 25, 2001, the Department requested additional information from DMC in order to evaluate DMC's request. DMC submitted the requested information on November 15, 2001. On the same date, petitioners submitted a letter regarding DMC's reporting of its cost using the fiscal year rather than the period of review. On November 27, 2001, the Department granted DMC's request to report its COP and CV information for its April 1, 2000, through March 31, 2001, fiscal year rather than for the period of review, July 1, 2000, through June 30, 2001.

On December 13, 2001, the Department issued supplemental questionnaires to POSCO and DMC covering their Section A though E responses. POSCO and DMC provided supplemental questionnaire responses on January 19, 2002.

On December 19, 2001, in a memorandum to the file from Catherine Bertrand through James Doyle, *Stainless Steel Sheet and Strip from Korea: Sales Below Cost Investigation,* we informed DMC that since the Department disregarded DMC's sales below cost from its analysis in the final results of the first administrative review (*see Stainless Steel Sheet and Strip From the Republic of Korea; Final Results and Partial Rescission of Antidumping Duty Administrative Review,* 66 FR 64950 (December 17, 2001)), it was therefore initiating a sales below cost investigation for the period July 1, 2000, through June 30, 2001. Our memorandum noted that DMC had already filed its Section D response on November 5, 2001.

The Department issued its second supplemental questionnaires to POSCO on March 21, 2002, and to DMC on April 4, 2002. POSCO responded on April 5, 2002, and DMC responded on April 19, 2002. On May 8, 2002, DMC submitted its sales reconciliation. On June 6, 2002, POSCO submitted its sales reconciliation.

Under section 751(a)(3)(A) of the Act, the Department may extend the deadline for completion of an administrative review if it determines that it is not practicable to complete the review within the statutory time limit. On March 6, 2002, the Department extended the time limit for the preliminary results in this review to July 31, 2002. *See Stainless Steel Sheet and Strip in Coils From the Republic of Korea: Extension of Time Limits for the Preliminary Results of the Antidumping Duty Administrative Review,* 67 FR 10134 (March 6, 2002).

The Department is conducting this administrative review in accordance with section 751 of the Act.

Scope of the Review

For purposes of this review, the products covered are certain stainless steel sheet and strip in coils. Stainless steel is an alloy steel containing, by weight, 1.2 percent or less of carbon and 10.5 percent or more of chromium, with or without other elements. The subject sheet and strip is a flat-rolled product in coils that is greater than 9.5 mm in width and less than 4.75 mm in thickness, and that is annealed or otherwise heat treated and pickled or otherwise descaled. The subject sheet and strip may also be further processed (*e.g.,* cold-rolled, polished, aluminized, coated, *etc.*) provided that it maintains the specific dimensions of sheet and strip following such processing.

The merchandise subject to this order is classified in the *Harmonized Tariff Schedule of the United States* (HTS) at subheadings: 7219.13.0031, 7219.13.0051, 7219.13.0071, 7219.1300.81,[2] 7219.14.0030, 7219.14.0065, 7219.14.0090, 7219.32.0005, 7219.32.0020, 7219.32.0025, 7219.32.0035, 7219.32.0036, 7219.32.0038, 7219.32.0042, 7219.32.0044, 7219.33.0005, 7219.33.0020, 7219.33.0025, 7219.33.0035, 7219.33.0036, 7219.33.0038, 7219.33.0042, 7219.33.0044, 7219.34.0005, 7219.34.0020, 7219.34.0025, 7219.34.0030, 7219.34.0035, 7219.35.0005, 7219.35.0015, 7219.35.0030, 7219.35.0035, 7219.90.0010, 7219.90.0020, 7219.90.0025,

[2] Due to changes to the HTS numbers in 2001, 7219.13.0030, 7219.13.0050, 7219.13.0070, and 7219.13.0080 are now 7219.13.0031, 7219.13.0051, 7219.13.0071, and 7219.13.0081, respectively.

7219.90.0060, 7219.90.0080, 7220.12.1000, 7220.12.5000, 7220.20.1010, 7220.20.1015, 7220.20.1060, 7220.20.1080, 7220.20.6005, 7220.20.6010, 7220.20.6015, 7220.20.6060, 7220.20.6080, 7220.20.7005, 7220.20.7010, 7220.20.7015, 7220.20.7060, 7220.20.7080, 7220.20.8000, 7220.20.9030, 7220.20.9060, 7220.90.0010, 7220.90.0015, 7220.90.0060, and 7220.90.0080. Although the HTS subheadings are provided for convenience and Customs purposes, the Department's written description of the merchandise covered by this order is dispositive.

Excluded from the scope of this order are the following: (1) Sheet and strip that is not annealed or otherwise heat treated and pickled or otherwise descaled, (2) sheet and strip that is cut to length, (3) plate (*i.e.,* flat-rolled stainless steel products of a thickness of 4.75 mm or more), (4) flat wire (*i.e.,* cold-rolled sections, with a prepared edge, rectangular in shape, of a width of not more than 9.5 mm), and (5) razor blade steel. Razor blade steel is a flat-rolled product of stainless steel, not further worked than cold-rolled (cold-reduced), in coils, of a width of not more than 23 mm and a thickness of 0.266 mm or less, containing, by weight, 12.5 to 14.5 percent chromium, and certified at the time of entry to be used in the manufacture of razor blades. *See* Chapter 72 of the HTS, ''Additional U.S. Note'' 1(d).

In response to comments by interested parties, the Department has determined that certain specialty stainless steel products were excluded from the scope of the investigation and the subsequent order. These excluded products are described below.

Flapper valve steel is defined as stainless steel strip in coils containing, by weight, between 0.37 and 0.43 percent carbon, between 1.15 and 1.35 percent molybdenum, and between 0.20 and 0.80 percent manganese. This steel also contains, by weight, phosphorus of 0.025 percent or less, silicon of between 0.20 and 0.50 percent, and sulfur of 0.020 percent or less. The product is manufactured by means of vacuum arc remelting, with inclusion controls for sulphide of no more than 0.04 percent and for oxide of no more than 0.05 percent. Flapper valve steel has a tensile strength of between 210 and 300 ksi, yield strength of between 170 and 270 ksi, plus or minus 8 ksi, and a hardness (Hv) of between 460 and 590. Flapper valve steel is most commonly used to produce specialty flapper valves in compressors.

Also excluded is a product referred to as suspension foil, a specialty steel product used in the manufacture of suspension assemblies for computer disk drives. Suspension foil is described as 302/304 grade or 202 grade stainless steel of a thickness between 14 and 127 microns, with a thickness tolerance of plus-or-minus 2.01 microns, and surface glossiness of 200 to 700 percent Gs. Suspension foil must be supplied in coil widths of not more than 407 mm, and with a mass of 225 kg or less. Roll marks may only be visible on one side, with no scratches of measurable depth. The material must exhibit residual stresses of 2 mm maximum deflection, and flatness of 1.6 mm over 685 mm length.

Certain stainless steel foil for automotive catalytic converters is also excluded from the scope of this order. This stainless steel strip in coils is a specialty foil with a thickness of between 20 and 110 microns used to produce a metallic substrate with a honeycomb structure for use in automotive catalytic converters. The steel contains, by weight, carbon of no more than 0.030 percent, silicon of no more than 1.0 percent, manganese of no more than 1.0 percent, chromium of between 19 and 22 percent, aluminum of no less than 5.0 percent, phosphorus of no more than 0.045 percent, sulfur of no more than 0.03 percent, lanthanum of less than 0.002 or greater than 0.05 percent, and total rare earth elements of more than 0.06 percent, with the balance iron.

Permanent magnet iron-chromium-cobalt alloy stainless strip is also excluded from the scope of this order. This ductile stainless steel strip contains, by weight, 26 to 30 percent chromium, and 7 to 10 percent cobalt, with the remainder of iron, in widths 228.6 mm or less, and a thickness between 0.127 and 1.270 mm. It exhibits magnetic remanence between 9,000 and 12,000 gauss, and a coercivity of between 50 and 300 oersteds. This product is most commonly used in electronic sensors and is currently available under proprietary trade names such as ''Arnokrome III.'' [3]

Certain electrical resistance alloy steel is also excluded from the scope of this order. This product is defined as a non-magnetic stainless steel manufactured to American Society of Testing and Materials (''ASTM'') specification B344 and containing, by weight, 36 percent nickel, 18 percent chromium, and 46 percent iron, and is most notable for its resistance to high temperature corrosion. It has a melting point of 1390 degrees Celsius and displays a creep rupture limit of 4 kilograms per square millimeter at 1000 degrees Celsius. This steel is most commonly used in the production of heating ribbons for circuit breakers and industrial furnaces, and in rheostats for railway locomotives. The product is currently available under proprietary trade names such as ''Gilphy 36.'' [4]

Certain martensitic precipitation-hardenable stainless steel is also excluded from the scope of this order. This high-strength, ductile stainless steel product is designated under the Unified Numbering System (''UNS'') as S45500-grade steel, and contains, by weight, 11 to 13 percent chromium, and 7 to 10 percent nickel. Carbon, manganese, silicon and molybdenum each comprise, by weight, 0.05 percent or less, with phosphorus and sulfur each comprising, by weight, 0.03 percent or less. This steel has copper, niobium, and titanium added to achieve aging, and will exhibit yield strengths as high as 1700 Mpa and ultimate tensile strengths as high as 1750 Mpa after aging, with elongation percentages of 3 percent or less in 50 mm. It is generally provided in thicknesses between 0.635 and 0.787 mm, and in widths of 25.4 mm. This product is most commonly used in the manufacture of television tubes and is currently available under proprietary trade names such as ''Durphynox 17.'' [5]

Finally, three specialty stainless steels typically used in certain industrial blades and surgical and medical instruments are also excluded from the scope of this order. These include stainless steel strip in coils used in the production of textile cutting tools (*e.g.,* carpet knives).[6] This steel is similar to AISI grade 420 but containing, by weight, 0.5 to 0.7 percent of molybdenum. The steel also contains, by weight, carbon of between 1.0 and 1.1 percent, sulfur of 0.020 percent or less, and includes between 0.20 and 0.30 percent copper and between 0.20 and 0.50 percent cobalt. This steel is sold under proprietary names such as ''GIN4 Mo.'' The second excluded stainless steel strip in coils is similar to AISI 420–J2 and contains, by weight, carbon of between 0.62 and 0.70 percent, silicon of between 0.20 and 0.50 percent, manganese of between 0.45 and 0.80 percent, phosphorus of no more than 0.025 percent and sulfur of no more than 0.020 percent. This steel has a carbide density on average of 100

[3] ''Arnokrome III'' is a trademark of the Arnold Engineering Company.

[4] ''Gilphy 36'' is a trademark of Imphy, S.A.

[5] ''Durphynox 17'' is a trademark of Imphy, S.A.

[6] This list of uses is illustrative and provided for descriptive purposes only.

carbide particles per 100 square microns. An example of this product is ''GIN5'' steel. The third specialty steel has a chemical composition similar to AISI 420 F, with carbon of between 0.37 and 0.43 percent, molybdenum of between 1.15 and 1.35 percent, but lower manganese of between 0.20 and 0.80 percent, phosphorus of no more than 0.025 percent, silicon of between 0.20 and 0.50 percent, and sulfur of no more than 0.020 percent. This product is supplied with a hardness of more than Hv 500 guaranteed after customer processing, and is supplied as, for example, ''GIN6.'' [7]

Partial Rescission of Review

As noted above, Samwon informed the Department that it had no shipments of subject merchandise to the United States during the POR. The Department subsequently contacted the U.S. Customs Service, requested Customs to conduct an inquiry into entries of Samwon's subject merchandise into the United States during the POR, and reviewed Customs' data. There is no evidence on the record which indicates that Samwon made exports of subject merchandise during the POR. Therefore, in accordance with 19 CFR 351.213(d)(3) and consistent with the Department's practice, we are preliminarily rescinding our review with respect to Samwon. *See, e.g., Certain Welded Carbon Steel Pipe and Tube from Turkey; Final Results and Partial Rescission of Antidumping Administrative Review,* 63 FR 35190, 35191 (June 29, 1998); *Certain Fresh Cut Flowers from Colombia; Final Results and Partial Rescission of Antidumping Duty Administrative Review,* 62 FR 53287, 53288 (Oct. 14, 1997).

Verification

As provided in section 782(i) of the Act, we verified sales and cost information provided by DMC from May 22, 2002, to May 30, 2002, in Seoul, Korea. We verified the CEP sales response of DMC's U.S. affiliate, Ocean Metal Corporation (''OMC''), from June 14, 2002, to June 18, 2002, in City of Industry, CA. We verified POSCO's sales and cost information from June 25 to July 5, 2002, at POSCO's plant headquarters in Pohang, Korea and their corporate offices in Seoul, Korea. We used standard verification procedures, including an examination of relevant sales, cost, and financial records, and selection of original documentation containing relevant information. Our verification results are outlined in the public version of the verification reports and are on file in the Central Records Unit (''CRU'') located in room B–099 of the main Department of Commerce Building, 14th Street and Constitution Avenue, NW., Washington, DC.

Normal Value Comparisons

To determine whether POSCO's and DMC's sales of subject merchandise from Korea to the United States were made at less than normal value, we compared the constructed export price (''CEP'') to the NV, as described in the ''Constructed Export Price'' and ''Normal Value'' sections of this notice, below. In accordance with section 777A of the Act, we calculated monthly weighted-average prices for NV and compared these to individual CEP transactions.

Product Comparisons

In accordance with section 771(16) of the Act, we considered all products covered by the description in the ''Scope of the Review'' section of this notice *supra,* which were produced and sold by POSCO and DMC in the home market during the POR, to be foreign like products for purposes of determining appropriate product comparisons to SSSS products sold in the United States. We have relied on nine product characteristics to match U.S. sales of subject merchandise to comparison sales of the foreign like product: grade, hot or cold-rolled, gauge, surface finish, metallic coating, non-metallic coating, width, temper, and edge. Where there were no sales of identical merchandise in the home market to compare to U.S. sales, we compared U.S. sales to the next most similar foreign like product on the basis of the characteristics and reporting instructions listed in the August 29, 2001, antidumping duty questionnaire and instructions, or to constructed value (''CV''), as appropriate.

Date of Sale

It is the Department's practice normally to use the invoice date as the date of sale, although we may use a date other than the invoice date if we are satisfied that a different date better reflects the date on which the exporter or producer establishes the material terms of sale. *See* 19 CFR 351.401(i). We have preliminarily determined that the of invoice date as the date of sale for respondents Dai Yang and POSCO. Consistent with the prior review, for home market sales, we used the reported date of the invoice from the Korean manufacturer.

For U.S. sales, POSCO reported its date of sale to be the earlier of the shipment date from Korea or POSCO's invoice date, although these were CEP transactions. Additionally, POSCO reported that its sales are shipped directly from the factory in Korea to the U.S. customer. However, POSCO's U.S. affiliate, Pohang Steel America Corporation (''POSAM''), serves as the principal point of contact for the U.S. customer. Customers place their orders with POSAM, which then places an order with POSCO. Upon confirmation from POSCO, POSAM separately invoices the unaffiliated customer in the United States. POSAM is solely responsible for collecting payment from the U.S. customer, and for paying POSCO for the merchandise. Since POSCO's U.S. sales were made ''in the United States'' within the meaning of section 772(b) of the Act, we have treated these sales as CEP transactions, consistent with *AK Steel Corp.* v. *United States,* 226 F.3d 1361, 1374 (Fed. Cir. 2000). Thus, we have determined that the date of sale for these U.S. sale is the date of invoice from POSAM to the unaffiliated customer. Therefore, we have based date of sale on invoice date from the U.S. affiliate, unless that date was subsequent to the date of shipment to the unaffiliated customer from Korea, in which case that shipment date is the date of sale. *See Certain Cold-Rolled and Corrosion-Resistant Carbon Steel Flat Products from Korea: Preliminary Results,* 65 FR 54197, 54201 (September 7, 2000), and *see Certain Cold-Rolled and Corrosion-Resistant Carbon Steel Flat Products from Korea: Final Results of Antidumping Duty Administrative Reviews,* 66 FR 3540 (January 16, 2001).

Dai Yang reported that the date of sale for its U.S. sales, was the invoice date from its U.S. affiliate to the unaffiliated customer.

Export Price and Constructed Export Price

In accordance with section 772(a) of the Act, export price is the price at which the subject merchandise is first sold (or agreed to be sold) before the date of importation by the producer or exporter of the subject merchandise outside of the United States to an unaffiliated purchaser in the United States or to an unaffiliated purchaser for exportation to the United States. In accordance with section 772(b) of the Act, CEP is the price at which the subject merchandise is first sold (or agreed to be sold) in the United States before or after the date of importation by or for the account of the producer or exporter of such merchandise or by a seller affiliated with the producer or exporter, to a purchaser not affiliated with the producer or exporter.

[7] ''GIN4 Mo,'' ''GIN5'' and ''GIN6'' are the proprietary grades of Hitachi Metals America, Ltd.

POSCO

For purposes of this administrative review, POSCO classified all of its sales as CEP sales. POSCO identified only one channel of distribution for U.S. sales through its wholly owned subsidiary, Pohang Steel America Corporation (''POSAM''), to its unaffiliated customer in the United States. We based our calculations on CEP, in accordance with subsections 772(b), (c), and (d) of the Act.

We calculated CEP based on packed prices to unaffiliated purchasers in the United States. We made deductions for movement expenses in accordance with section 772(c)(2)(A) of the Act; these included, where appropriate, foreign inland freight from the plant to the port of export, foreign brokerage and Korean customs clearance fees, international freight, marine insurance, U.S. customs duty, and U.S. brokerage and wharfage expenses (classified as other U.S. transportation expenses). Also, in accordance with section 772(c)(2)(A) of the Act, we deducted packing expenses because packing expenses are included in the CEP. In accordance with section 772(d)(1) of the Act, we deducted those selling expenses associated with economic activities occurring in the United States, including direct selling expenses (*i.e.,* imputed credit expenses, postage and term credit expenses, and letter of credit and remittance expenses) and indirect selling expenses, including inventory carrying costs. For POSAM's indirect selling expenses, we reduced POSAM's reported interest expenses by the amount of the imputed credit expenses reported on POSCO's U.S. sales database. Additionally, we added an amount for duty drawback to the U.S. price pursuant to section 772(c)(1)(B) of the Act.

For CEP sales, we also made an adjustment for profit in accordance with section 772(d)(3) of the Act. We deducted the profit allocated to expenses deducted under sections 772(d)(1) and 772(d)(2) in accordance with sections 772(d)(3) and 772(f) of the Act. In accordance with section 772(f) of the Act, we computed profit based on total revenue realized on sales in both the U.S. and home markets, less all expenses associated with those sales. We then allocated profit to expenses incurred with respect to U.S. economic activity, based on the ratio of total U.S. expenses to total expenses for both the U.S. and home markets.

We made no changes to POSCO's reported CEP sales database as a result of verification. *See Sales and Cost Verification of Pohang Iron and Steel Corporation (''POSCO'') in the Antidumping Administrative Review of Certain Stainless Steel Sheet and Strip in Coils from Korea (''POSCO Verification Report'')* (July 31, 2002); *Analysis for the preliminary results of review for stainless steel strip in coils from Korea—Pohang Iron & Steel Company (''POSCO'') (''POSCO Prelim Analysis Memo'')* (July 31, 2002).

DMC

DMC reported that it made all sales of subject merchandise to the United States through its wholly-owned subsidiary in the United States, OMC. Consequently, it classified all of its U.S. sales as CEP sales. We based our calculations on CEP, in accordance with subsections 772(b), (c), and (d) of the Act.

We calculated CEP based on packed prices to unaffiliated purchasers in the United States. We made adjustments to the starting price for billing adjustments, where applicable. We made deductions for movement expenses in accordance with section 772(c)(2)(A) of the Act; these included, where appropriate, foreign inland freight from the plant to the port of export, foreign brokerage and Korean customs clearance fees, international freight, marine insurance, U.S. inland freight from port to warehouse, U.S. inland freight from warehouse/plant to the unaffiliated customer, U.S. brokerage and handling, and U.S. customs duty. Also, in accordance with section 772(c)(2)(A) of the Act, we deducted packing expenses because packing expenses are included in the CEP. In accordance with section 772(d)(1) of the Act, we deducted those selling expenses associated with economic activities occurring in the United States, including direct selling expenses (*i.e.,* imputed credit, commissions, warranty expense, banking expenses, and domestic banking fees) and indirect selling expenses, including inventory carrying costs. Additionally, we added to the U.S. price an amount for duty drawback pursuant to section 772(c)(1)(B) of the Act.

For CEP sales, we also made an adjustment for profit in accordance with section 772(d)(3) of the Act. We deducted the profit allocated to expenses deducted under sections 772(d)(1) and 772(d)(2) in accordance with sections 772(d)(3) and 772(f) of the Act. In accordance with section 772(f) of the Act, we computed profit based on total revenue realized on sales in both the U.S. and home markets, less all expenses associated with those sales. We then allocated profit to expenses incurred with respect to U.S. economic activity, based on the ratio of total U.S. expenses to total expenses for both the U.S. and home markets.

We made corrections to the data for certain variables included in the pre-selected sales examined at verification. *See Daiyang Metal Co., Ltd. Home Market Sales, United States Sales, and Cost of Production Verification Report; Antidumping Administrative Review on Stainless Steel Sheet and Strip in Coils from Korea* (July 31, 2002) *(''DMC Verification Report''); Verification Report of the Administrative Review of Stainless Steel Sheet and Strip from Korea—United States Sales Verification Report of Ocean Metal Corporation* (July 31, 2002) *(''OMC Verification Report''); Analysis for the preliminary results of review for stainless steel strip in coils from Korea—Daiyang Metal Co., Ltd. (''DMC Prelim Analysis Memo'')* (July 31, 2002).

Normal Value

1. Home Market Viability

For POSCO and DMC, we compared the aggregate volume of home market sales of the foreign like product and U.S. sales of the subject merchandise to determine whether the volume of the foreign like product sold in Korea was sufficient, pursuant to section 773(a)(1)(C) of the Act, to form a basis for NV. Because the volume of home market sales of the foreign like product was greater than five percent of the U.S. sales of subject merchandise for both companies, in accordance with section 773(a)(1)(B)(i) of the Act, we have based the determination of NV upon the home market sales of the foreign like product. Thus, we used as NV the prices at which the foreign like product was first sold for consumption in Korea, in the usual commercial quantities, in the ordinary course of trade, and, to the extent possible, at the same level of trade (''LOT'') as the CEP or NV sales, as appropriate.

After testing home market viability and whether home market sales were at below-cost prices, we calculated NV as noted in the ''Price-to-Price Comparisons'' and ''Price-to-Constructed Value (''CV'') Comparisons'' sections of this notice.

2. Arm's-Length Test

POSCO and DMC reported that they each made sales in the home market to affiliated and unaffiliated end users and distributors/retailers. Sales to affiliated customers in the home market not made at arm's length were excluded from our analysis. To test whether these sales were made at arm's length, we compared the starting prices of sales to

affiliated and unaffiliated customers net of all billing adjustments, movement charges, direct selling expenses, discounts and packing, but including the alloy surcharge. Where prices to the affiliated party were on average 99.5 percent or more of the price to the unaffiliated party, we determined that sales made to the affiliated party were made at arm's length. *See* 19 CFR 351.403(c). Where no affiliated customer ratio could be calculated because identical merchandise was not sold to unaffiliated customers, we were unable to determine that these sales were made at arm's length and, therefore, excluded them from our analysis. *See, e.g., Final Determination of Sales at Less Than Fair Value: Certain Cold-Rolled Carbon Steel Flat Products from Argentina*, 58 FR 37062, 37077 (July 9, 1993). Where the exclusion of such sales eliminated all sales of the most appropriate comparison product, we made comparisons to the next most similar model. Certain of POSCO's and DMC's affiliated home market customers did not pass the arm's length test. However, we did not consider the downstream sales from these customers to the first unaffiliated customer because DMC's affiliated home market customers further manufactured the subject merchandise into merchandise outside of the scope of the order. With respect to POSCO, the total quantity of sales made through these affiliated parties was less than 5 percent of the total quantity of home market sales. Therefore, in accord with section 351.403 of the Department's regulations, we did not request information on the downstream sales.

3. Cost of Production (''COP'') Analysis

Because the Department determined that POSCO and DMC made sales in the home market at prices below the cost of producing the subject merchandise in the previous administrative review of and therefore excluded such sales from normal value, the Department determined that there are reasonable grounds to believe or suspect that POSCO and DMC made sales in the home market at prices below the cost of producing the merchandise in this administrative review. *See* section 773(b)(2)(A)(ii) of the Act. As a result, the Department initiated a cost of production inquiry to determine whether POSCO and DMC made home market sales during the POR at prices below their respective COP within the meaning of section 773(b) of the Act.

We conducted the COP analysis described below.

A. Calculation of COP

In accordance with section 773(b)(3) of the Act, we calculated a weighted-average COP based on the sum of POSCO's and DMC's cost of materials and fabrication for the foreign like product, plus amounts for home market selling, general and administrative expenses (''SG&A''), including interest expenses, and packing costs. We relied on the COP data submitted by POSCO and DMC in their original and supplemental cost questionnaire responses. For the preliminary results of review, we revised the COP information submitted by POSCO as follows: We reclassified net gains and losses on the valuation and disposition of marketable securities as financing expense, and we reclassified the reversal of an allowance for doubtful accounts as an indirect selling expense. *See POSCO Prelim Analysis Memo* and *POSCO Verification Report*.

We made no changes to the COP information provided by DMC to conduct the cost test.

B. Test of Home Market Prices

On a product-specific basis, we compared the weighted-average COP for POSCO and DMC, adjusted where appropriate, to their home market sales of the foreign like product as required under section 773(b) of the Act, in order to determine whether these sales had been made at prices below the COP. In determining whether to disregard home market sales made at prices less than the COP, we examined whether such sales were made: (1) Within an extended period of time, in substantial quantities; and (2) at prices which did not permit the recovery of all costs within a reasonable period of time in accordance with section 773(b)(1)(A) and (B) of the Act. We compared the COP to home market prices, less any applicable billing adjustments, movement charges, discounts, and direct and indirect selling expenses.

C. Results of the COP Test

Pursuant to section 773(b)(2)(C) of the Act, where less than 20 percent of a respondent's sales of a given product within an extended period of time are at prices less than the COP, we did not disregard any below-cost sales of that product because the below-cost sales were not made in ''substantial quantities.'' Where 20 percent or more of a respondent's sales of a given product during the extended period were at prices less than the COP, we determined such sales to have been made in ''substantial quantities'' pursuant to section 773(b)(2)(C)(i) within an extended period of time, in accordance with section 773(b)(2)(B) of the Act. In such cases, because we used POR average costs, we also determined that such sales were not made at prices which would permit recovery of all costs within a reasonable period of time, in accordance with section 773(b)(2)(D) of the Act. As a result, we disregarded such below-cost sales. Where all sales of a specific product were at prices below the COP, we disregarded all sales of that product. Based on this test, we disregarded below-cost sales from our analysis for POSCO and DMC. For those sales of subject merchandise for which there were no comparable home market sales in the ordinary course of trade, we compared CEP to CV, in accordance with section 773(a)(4) of the Act.

D. Calculation of CV

In accordance with section 773(e)(1) of the Act, we calculated POSCO's and DMC's constructed value (''CV'') based on the sum of their cost of materials, fabrication, SG&A, including interest expenses, and profit. We calculated the COPs included in the calculation of CV as noted above in the ''Calculation of COP'' section of this notice. In accordance with section 773(e)(2)(A) of the Act, we based SG&A and profit on the amounts incurred and realized by POSCO and DMC in connection with the production and sale of the foreign like product in the ordinary course of trade for consumption in the foreign country. For selling expenses, we used the actual weighted-average home market direct and indirect selling expenses. For CV, we made the same adjustments described in the COP section above.

Price-to-Price Comparisons

POSCO

For those product comparisons for which there were sales at prices above the COP, we based NV on the home market prices to unaffiliated purchasers and those affiliated customer sales which passed the arm's length test. We made adjustments, where appropriate, for physical differences in the merchandise in accordance with section 773(a)(6)(C)(ii) of the Act.

We made adjustments, where applicable, for movement expenses (*i.e.*, inland freight from plant to distribution warehouse, warehousing expense, and inland freight from plant/distribution warehouse to customer) in accordance with section 773(a)(6)(B) of the Act. We made circumstance-of-sale adjustments for credit, warranty expense and interest revenue, where appropriate in accordance with section 773(a)(6)(C). In

accordance with section 773(a)(6), we deducted home market packing costs and added U.S. packing costs. Also, on certain sales, we added to NV an amount for duty drawback. Finally, in accordance with section 773(a)(4) of the Act, where the Department was unable to determine NV on the basis of contemporaneous matches in accordance with 773(1)(B)(i), we based NV on CV.

We did not make any adjustments to POSCO's reported home market sales data in the calculation of NV.

DMC

For those product comparisons for which there were sales at prices above the COP, we based NV on the home market prices to unaffiliated purchasers and those affiliated customer sales which passed the arm's length test. We made adjustments, where appropriate, for physical differences in the merchandise in accordance with section 773(a)(6)(C)(ii) of the Act.

We calculated NV based on the home market prices to both affiliated and unaffiliated home market customers. Because all of DMC's home market sales were made on an ex-factory basis, we made no adjustments for inland freight from the plant or distribution warehouse to the customer in accordance with section 773(a)(6)(B) of the Act. We made circumstance-of-sale adjustments for credit, where appropriate. In accordance with section 773(a)(6), we deducted home market packing costs and added U.S. packing costs. Finally, in accordance with section 773(a)(4) of the Act, where the Department was unable to determine NV on the basis of contemporaneous matches in accordance with 773(1)(B)(i), we based NV on CV.

Price-to-CV Comparisons

In accordance with section 773(a)(4) of the Act, we base NV on CV if we are unable to find a home market match of identical or similar merchandise. For selling expenses, we used the actual weighted-average home market direct and indirect selling expenses. Where applicable, we make adjustments to CV in accordance with section 773(a)(8) of the Act.

Level of Trade

In accordance with section 773(a)(1)(B) of the Act, to the extent practicable, we determine NV based on sales in the comparison market at the same level of trade (''LOT'') as the EP or CEP transaction. The NV LOT is that of the starting-price sales in the comparison market or, when NV is based on CV, that of the sales from which we derive selling, general and administrative (''SG&A'') expenses and profit. For EP, the LOT is also the level of the starting price sale, which is usually from the exporter to the importer. For CEP, it is the level of the constructed sale from the exporter to the importer.

To determine whether NV sales are at a different LOT than EP or CEP sales, we examine stages in the marketing process and selling functions along the chain of distribution between the producer and the customer. If the comparison market sales are at a different LOT, and the difference affects price comparability, as manifested in a pattern of consistent price differences between the sales on which NV is based and comparison-market sales at the LOT of the export transaction, we make an LOT adjustment under section 773(a)(7)(A) of the Act. Finally, for CEP sales, if the NV level is more remote from the factory than the CEP level and there is no basis for determining whether the differences in the levels between NV and CEP sales affects price comparability, we adjust NV under section 773(A)(7)(B) of the Act (the CEP offset provision). *See Notice of Final Determination of Sales at Less Than Fair Value: Certain Carbon Steel Plate from South Africa*, 62 FR 61731 (November 19, 1997).

In implementing these principles in this administrative review, we obtained information from POSCO and DMC about the marketing stages involved in its reported U.S. and home market sales, including a description of the selling activities performed by POSCO and DMC for each channel of distribution. In identifying levels of trade for CEP, we considered only the selling activities reflected in the price after the deduction of expenses and profit under section 772(d) of the Act. *See Micron Technology, Inc.* v. *United States*, 243 F.3d 1301, 1314–1315 (Fed. Cir. 2001). Generally, if the reported levels of trade are the same in the home and U.S. markets, the functions and activities of the seller should be similar. Conversely, if a party reports levels of trade that are different for different categories of sales, the functions and activities should be dissimilar.

In the present review, neither POSCO nor DMC requested a LOT adjustment. To determine whether an adjustment was necessary, in accordance with the principles discussed above, we examined information regarding the distribution systems in both the United States and home markets, including the selling functions, classes of customer, and selling expenses.

POSCO

In the present review, POSCO did not request a LOT adjustment. However, because POSCO claims that the adjustment for the function of the U.S. operation would result in a U.S. level of trade that is less advanced than the home market level of trade, POSCO claims that a CEP offset is required. To determine whether an adjustment was necessary, in accordance with the principles discussed above, we examined information regarding the distribution systems in both the United States and Korean markets, including the selling functions, classes of customer, and selling expenses.

In both the U.S. and home markets, POSCO reported one level of trade. *See* POSCO's October 3, 2001, Section A response, at A–9 through A–13. POSCO sold through two channels of distribution in the home market: (1) directly from its mill to all customers in the home market: end users, domestic trading companies and service centers; and (2) POSCO sold a limited quantity of overrun and secondary merchandise through the internet. POSCO sold through one channel distribution in the U.S. market: through POSAM to unaffiliated trading companies.

For sales in home market channel one, POSCO performed all sales-related activities, including arranging for freight and delivery; providing computerized accounting and sales systems; market research; warranty; sales negotiation; after-sales service; quality control; and extending credit. POSCO's home market sales in channel 1 were produced to order. The same selling functions were performed in home market channel two; however, all internet sales were made from inventory. Because these selling functions are similar for both sales channels, we preliminarily determine that there is one LOT in the home market.

For all U.S. sales made through POSAM, POSCO determined the price and terms of sale and performed all sales-related activities (with the exception of extending credit and invoicing the customers). Since all sales in the United States are made through a single channel of distribution, we preliminarily determine that there is one LOT in the U.S. market.

In comparing POSCO's home market and U.S. market sales, it appears that POSCO's offered many of the same selling functions in both markets, including: negotiating prices; meeting with customers; providing inventory; personnel management and training; technical advice; providing computerized accounting and sales

systems; engineering services; research and development and technical programs; procurement services; and quality control. Accordingly, we preliminarily determine that there is not a significant difference in the selling functions performed in the home market and U.S. market and that these sales are made at the same LOT. Consequently, we preliminarily determine that a LOT adjustment or CEP offset is not warranted in this case.

DMC

In the present review, DMC made no claims that a LOT adjustment was appropriate. To determine whether an adjustment is necessary, in accordance with the principles discussed above, we examined information regarding the distribution systems in both the United States and home markets, including the selling functions, classes of customer, and selling expenses.

In both the U.S. and home markets, DMC reported one level of trade. *See* DMC's October 3, 2001, Section A response, at A–8 through A–11. DMC sold through two channels of distribution in the home market: (1) Directly from its mill to affiliated and unaffiliated manufacturers; and (2) directly from its mill to unaffiliated distributors. DMC sold through two channels of distribution in the U.S. market: (1) Through OMC to unaffiliated customers in the United States; and (2) through OMC for further manufacturing into stainless steel pipe, which is not covered by the order.

For sales in the home market to either end-users or distributors, DMC's selling activities consisted of receiving and processing customers' orders, arranging freight and delivery for small customers and delivery services for customers purchasing large quantities, and inventory maintenance for small distributors. Because DMC's selling activities did not vary by channels of distribution, we preliminarily determine that there is one LOT in the home market.

In the U.S. market, DMC sold all of its merchandise through its's U.S. subsidiary, OMC. Consequently, DMC claimed that OMC performed the requisite selling activities, such as the negotiation of sales terms, maintenance and collection of accounts receivable, evaluation of customer credit, importation of subject merchandise and delivery of the merchandise to the unaffiliated customer. For the U.S. market, DMC's selling functions are limited to freight and delivery arrangements, which did not vary by customer type. Therefore, we preliminarily determine that there is one LOT in the U.S. market. For these CEP sales, we determined that fewer and different selling functions were performed for CEP sales to OMC than for sales at the home market LOT. We found sales at the home market LOT were at a more advanced stage of distribution (to end users) compared to the CEP sales.

We attempted to examine whether the difference in LOTs affects price comparability. However, we were unable to quantify the LOT adjustment in accordance with section 773(a)(7)(A) of the Act, as we found that there is only one LOT in the home market. Because of this, we were unable to calculate a LOT adjustment, as we found the LOT in the home market did not match the LOT of the CEP transactions. Therefore, because the NV is established at a more advanced level of trade than the LOT of the CEP transactions, we adjusted NV under section 773(a)(7)(B) of the Act (the CEP offset provision). Because of this, we did not calculate a LOT adjustment. Instead, a CEP offset was applied to the NV-CEP comparison.

Currency Conversion

For purposes of the preliminary results, we made currency conversions in accordance with section 773A of the Act, based on the official exchange rates in effect on the dates of the U.S. sales as certified by the Federal Reserve Bank of New York. Section 773A(a) of the Act directs the Department to use the daily exchange rate in effect on the date of sale in order to convert foreign currencies into U.S. dollars, unless the daily rate involves a ''fluctuation.'' In accordance with the Department's practice, we have determined as a general matter that a fluctuation exists when the daily exchange rate differs from a benchmark by 2.25 percent. *See, e.g., Certain Stainless Steel Wire Rods from France; Preliminary Results of Antidumping Duty Administrative Review*, 61 FR 8915, 8918 (March 6, 1998), and Policy Bulletin 96–1: Currency Conversions, 61 FR 9434 (March 8, 1996). The benchmark is defined as the rolling average of rates for the past 40 business days. When we determine a fluctuation exists, we substitute the benchmark for the daily rate.

Preliminary Results of Review

As a result of our administrative review, we preliminarily determine that the following weighted-average dumping margin exists for the period July 1, 2000, through June 30, 2001:

STAINLESS STEEL SHEET AND STRIP IN COILS FROM KOREA

Manufacturer/exporter/reseller	Margin (percent)
POSCO	1.01
DMC	5.42

The Department will disclose calculations performed within five days of the date of publication of this notice to the parties to this proceeding in accordance with 19 CFR 351.224(b). An interested party may request a hearing within 30 days of publication of these preliminary results. *See* 19 CFR 351.310(c). Any hearing, if requested, will be held 37 days after the date of publication, or the first working day thereafter. Interested parties may submit case briefs and/or written comments no later than 30 days after the date of publication of these preliminary results of review. *See* 19 CFR 351.309(c)(ii). Rebuttal briefs and rebuttals to written comments, limited to issues raised in such briefs or comments, may be filed no later than 35 days after the date of publication. *See* 19 CFR 351.309(d). Parties submitting arguments in this proceeding are requested to submit with the argument: (1) A statement of the issue, and (2) a brief summary of the argument. Case and rebuttal briefs and comments must be served on interested parties in accordance with 19 CFR 351.303(f). Further, we would appreciate it if parties submitting written comments also provide the Department with an additional copy of those comments on diskette. The Department will issue the final results of this administrative review, which will include the results of its analysis of issues raised in any such comments, within 120 days of publication of these preliminary results, pursuant to Section 751(a)(3)(A) of the Act.

Assessment

Upon issuance of the final results of this review, the Department shall determine, and the U.S. Customs Service shall assess, antidumping duties on all appropriate entries. Pursuant to 19 CFR 351.212(b), the Department has calculated an assessment rate applicable to all appropriate entries. We calculated importer-specific duty assessment rates on the basis of the ratio of the total amount of antidumping duties calculated for the examined sales to the total entered value, or entered quantity, as appropriate, of the examined sales for that importer. Upon completion of this review, where the assessment rate is above *de minimis*, we will instruct the U.S. Customs Service to assess duties on

all entries of subject merchandise by that importer.

Cash Deposit

The following cash deposit requirements will be effective upon publication of these final results for all shipments of the subject merchandise entered, or withdrawn from warehouse, for consumption on or after the publication date of these final results of administrative review, as provided by section 751(a)(1) of the Act: (1) The cash deposit rate for each of the reviewed companies will be the rate listed in the final results of review (except that if the rate for a particular product is *de minimis, i.e.*, less than 0.5 percent, no cash deposit will be required for that company); (2) for previously investigated companies not listed above, the cash deposit rate will continue to be the company-specific rate published for the most recent period; (3) if the exporter is not a firm covered in this review, a prior review, or the original less than fair value (''LTFV'') investigation, but the manufacturer is, the cash deposit rate will be the rate established for the most recent period for the manufacturer of the merchandise; and (4) the cash deposit rate for all other manufacturers or exporters will continue to be the ''all others'' rate of 2.49 percent, which is the all others rate established in the LTFV investigation. These deposit requirements, when imposed, shall remain in effect until publication of the final results of the next administrative review.

Notification to Interested Parties

This notice also serves as a preliminary reminder to importers of their responsibility under 19 CFR 351.402(f)(2) to file a certificate regarding the reimbursement of antidumping duties prior to liquidation of the relevant entries during this review period. Failure to comply with this requirement could result in the Secretary's presumption that reimbursement of the antidumping duties occurred and the subsequent assessment of double antidumping duties.

This notice also serves as a reminder to parties subject to administrative protective orders (''APOs'') of their responsibility concerning the disposition of proprietary information disclosed under APO in accordance with 19 CFR 351.305, that continues to govern business proprietary information in this segment of the proceeding. Timely written notification of the return/destruction of APO materials or conversion to judicial protective order is hereby requested. Failure to comply with the regulations and the terms of an APO is a sanctionable violation.

This determination is issued and published in accordance with sections 751(a)(1) and 777(i)(1) of the Act.

Dated: July 31, 2002.

Faryar Shirzad,

Assistant Secretary for Import Administration.

[FR Doc. 02–19992 Filed 8–6–02; 8:45 am]

BILLING CODE 3510–DS–P

DEPARTMENT OF COMMERCE

International Trade Administration

[A–475–824]

Preliminary Results of Antidumping Duty Administrative Review: Stainless Steel Sheet and Strip in Coils from Italy

AGENCY: Import Administration, International Trade Administration, Department of Commerce.

ACTION: Notice of the preliminary results of the antidumping duty administrative review of stainless steel sheet and strip in coils from Italy.

SUMMARY: In response to requests from domestic interested parties, ThyssenKrupp Acciai Speciali Terni S.p.A. (''TKAST'')[1], a producer and exporter of subject merchandise, and ThyssenKrupp AST USA, Inc. (''TKAST USA''), an importer of subject merchandise, the Department of Commerce (''the Department'') is conducting an administrative review of the antidumping duty order on stainless steel sheet and strip in coils (''SSSS'') from Italy. This review covers imports of subject merchandise from TKAST. The period of review (''POR'') is July 1, 2000 through June 30, 2001.

The Department preliminary determines that SSSS from Italy has been sold in the United States at less than normal value during the POR. If these preliminary results are adopted in our final results of this administrative review, we will instruct the U.S. Customs Service (''Customs'') to assess antidumping duties equal to the difference between export price and normal value.

EFFECTIVE DATE: August 7, 2002.

FOR FURTHER INFORMATION CONTACT: Robert A. Bolling at 202–482–3434, Import Administration, International Trade Administration, U.S. Department of Commerce, 1401 Constitution Avenue, N.W., Washington, DC 20230.

SUPPLEMENTARY INFORMATION:

Applicable Statute and Regulations

Unless otherwise indicated, all citations to the Tariff Act of 1930, as amended (''Act''), are references to the provisions effective January 1, 1995, the effective date of the amendments made to the Act by the Uruguay Round Agreements Act. In addition, unless otherwise indicated, all citations to the Department's regulations are to the regulations codified at 19 C.F.R. part 351 (2001).

Background

On July 2, 2001, the Department published in the Federal Register a notice of opportunity to request an administrative review of the antidumping duty order on stainless steel sheet and strip in coils (''SSSS'') from Italy. *See Antidumping or Countervailing Duty Order, Finding, or Suspended Investigation; Opportunity to Request Administrative Review*, 66 FR 34910 (July 2, 2001). On July 31, 2001, domestic industry parties from the original investigation (''petitioners''), TKAST and TKAST USA requested that the Department conduct an administrative review of the antidumping duty order. On August 20, 2001, the Department initiated an administrative review of the antidumping duty order on SSSS from Italy with regard to TKAST. *See Initiation of Antidumping and Countervailing Duty Administrative Reviews and Requests for Revocation in Part*, 66 FR 43570 (August 20, 2001).

On August 31, 2001, the Department issued an antidumping duty questionnaire to TKAST. On September 21, 2001, TKAST submitted its response to Section A of the questionnaire. On November 5, 2001, TKAST submitted its responses to Sections A through E of the questionnaire. On November 19, 2001, TKAST submitted its cost reconciliation to the Department. On December 21, 2001, petitioners submitted comments on TKAST's Sections A through C responses, which included concerns regarding TKAST's reported insurance revenues, indirect selling expenses, and export price sales. On January 31, 2002, petitioners submitted comments on TKAST's cost reconciliation, and TKAST's Sections D and E responses, which included concerns regarding tying the Section D cost data to TKAST's financial statements, the use of fiscal year 2000 data in reporting costs,

[1] On January 18, 2002 Acciai Speciali Terni S.p.A.'s shareholders voted to change the company's name to ThyssenKrupp Acciai Speciali Terni S.p.A. On February 27, 2002, Acciai Speciali Terni USA, Inc. became ThyssenKrupp AST USA, Inc. Throughout most of the responses, the companies refer to themselves as TKAST and TKAST USA, respectively.

and supporting documentation on further manufacturing costs.

On March 14, 2002, the Department issued a supplemental questionnaire to Sections A through C. On March 22, 2002, TKAST submitted a letter to the Department asking that the Department reconsider its request that TKAST report downstream home market sales from certain Italian affiliate(s). On March 27, 2002, the Department denied TKAST's request and reiterated to TKAST that, pursuant to section 351.403(d) of the Department's regulations, TKAST was required to report all downstream sales for these Italian affiliate(s). On April 2, 2002, the Department issued a supplemental questionnaire to Sections D and E. On April 8, 2002, TKAST submitted its Section A supplemental response. On April 15, 2002, TKAST submitted its Section B supplemental response. On April 22, 2002, TKAST submitted its Section C supplemental response. On April 30, 2002, TKAST submitted its Sections D and E supplemental responses. On May 1, 2002, petitioners submitted additional comments on TKAST's reported insurance revenue.

On May 13, 2002, the Department issued a second supplemental questionnaire to Sections A through C. Also on May 13, 2002, TKAST submitted downstream sales information for certain Italian affiliate(s). On May 24, 2002, TKAST submitted its Sections A through C second supplemental responses. On May 30, 2002, TKAST submitted its sales reconciliation information.

Under section 751(a)(3)(A) of the Act, the Department may extend the deadline for completion of an administrative review if it determines that it is not practicable to complete the review within the statutory time limit. On February 26, 2002, the Department extended the time limit for the preliminary results in this administrative review by ninety days. *See Notice of Extension of Time Limit of the Preliminary Results of Antidumping Duty Administrative Review: Stainless Steel Sheet and Strip in Coils From Italy*, 67 FR 9960 (March 5, 2002). On May 3, 2002, the Department extended the time limit for the preliminary results in this administrative review another twenty-five days. *See Notice of Extension of Time Limit of the Preliminary Results of Antidumping Duty Administrative Review: Stainless Steel Sheet and Strip in Coils From Italy*, 67 FR 32015 (May 13, 2002). On July 26, 2002, the Department extended the time limit for the preliminary results in this administrative review another five days.

The Department is conducting this administrative review in accordance with section 751 of the Act.

Period of Review

The POR is July 1, 2000 through June 30, 2001.

Verification

On December 21, 2001, petitioners requested that the Department conduct a verification in this administrative review. *See* petitioners' letter to the Department, at 53 (December 21, 2001). As provided in section 782(i) of the Act, the Department conducted a sales verification of the information provided by TKAST, from June 10, 2002 through June 14, 2002, using standard verification procedures, including an examination of relevant sales, cost, financial records, and a selection of relevant original documentation. Our verification results are outlined in the Report on the Sales Verification of ThyssenKrupp Acciai Speciali Terni S.p.A. (July 11, 2002) (''*Verification Report*''), a public version of which is available on file in the Central Records Unit, room B–099 of the Herbert C. Hoover Department of Commerce building, 1401 Constitution Avenue, N.W., Washington, D.C.

Scope of the Review

For purposes of this administrative review, the products covered are certain stainless steel sheet and strip in coils. Stainless steel is an alloy steel containing, by weight, 1.2 percent or less of carbon and 10.5 percent or more of chromium, with or without other elements. The subject sheet and strip is a flat-rolled product in coils that is greater than 9.5 mm in width and less than 4.75 mm in thickness, and that is annealed or otherwise heat treated and pickled or otherwise descaled. The subject sheet and strip may also be further processed (e.g., cold-rolled, polished, aluminized, coated, etc.) provided that it maintains the specific dimensions of sheet and strip following such processing.

The merchandise subject to this review is currently classifiable in the Harmonized Tariff Schedule of the United States (''HTS'') at subheadings: 7219.13.0031, 7219.13.0051, 7219.13.0071, 7219.1300.81,[2] 7219.14.0030, 7219.14.0065, 7219.14.0090, 7219.32.0005, 7219.32.0020, 7219.32.0025, 7219.32.0035, 7219.32.0036, 7219.32.0038, 7219.32.0042, 7219.32.0044, 7219.33.0005, 7219.33.0020, 7219.33.0025, 7219.33.0035, 7219.33.0036, 7219.33.0038, 7219.33.0042, 7219.33.0044, 7219.34.0005, 7219.34.0020, 7219.34.0025, 7219.34.0030, 7219.34.0035, 7219.35.0005, 7219.35.0015, 7219.35.0030, 7219.35.0035, 7219.90.0010, 7219.90.0020, 7219.90.0025, 7219.90.0060, 7219.90.0080, 7220.12.1000, 7220.12.5000, 7220.20.1010, 7220.20.1015, 7220.20.1060, 7220.20.1080, 7220.20.6005, 7220.20.6010, 7220.20.6015, 7220.20.6060, 7220.20.6080, 7220.20.7005, 7220.20.7010, 7220.20.7015, 7220.20.7060, 7220.20.7080, 7220.20.8000, 7220.20.9030, 7220.20.9060, 7220.90.0010, 7220.90.0015, 7220.90.0060, and 7220.90.0080. Although the HTS subheadings are provided for convenience and Customs purposes, the Department's written description of the merchandise under review is dispositive.

Excluded from the scope of this review are the following: (1) Sheet and strip that is not annealed or otherwise heat treated and pickled or otherwise descaled, (2) sheet and strip that is cut to length, (3) plate (*i.e.*, flat-rolled stainless steel products of a thickness of 4.75 mm or more), (4) flat wire (*i.e.*, cold-rolled sections, with a prepared edge, rectangular in shape, of a width of not more than 9.5 mm), and (5) razor blade steel. Razor blade steel is a flat-rolled product of stainless steel, not further worked than cold-rolled (cold-reduced), in coils, of a width of not more than 23 mm and a thickness of 0.266 mm or less, containing, by weight, 12.5 to 14.5 percent chromium, and certified at the time of entry to be used in the manufacture of razor blades. *See* Chapter 72 of the HTS, ''Additional U.S. Note'' 1(d).

Flapper valve steel is also excluded from the scope of this review. This product is defined as stainless steel strip in coils containing, by weight, between 0.37 and 0.43 percent carbon, between 1.15 and 1.35 percent molybdenum, and between 0.20 and 0.80 percent manganese. This steel also contains, by weight, phosphorus of 0.025 percent or less, silicon of between 0.20 and 0.50 percent, and sulfur of 0.020 percent or less. The product is manufactured by means of vacuum arc remelting, with inclusion controls for sulphide of no more than 0.04 percent and for oxide of no more than 0.05 percent. Flapper valve steel has a tensile strength of between 210 and 300 ksi, yield strength of between 170 and 270 ksi, plus or

[2] Due to changes to the HTS numbers in 2001, 7219.13.0030, 7219.13.0050, 7219.13.0070, and 7219.13.0080 are now 7219.13.0031, 7219.13.0051, 7219.13.0071, and 7219.13.0081, respectively.

minus 8 ksi, and a hardness (Hv) of between 460 and 590. Flapper valve steel is most commonly used to produce specialty flapper valves in compressors.

Also excluded is a product referred to as suspension foil, a specialty steel product used in the manufacture of suspension assemblies for computer disk drives. Suspension foil is described as 302/304 grade or 202 grade stainless steel of a thickness between 14 and 127 microns, with a thickness tolerance of plus-or-minus 2.01 microns, and surface glossiness of 200 to 700 percent Gs. Suspension foil must be supplied in coil widths of not more than 407 mm, and with a mass of 225 kg or less. Roll marks may only be visible on one side, with no scratches of measurable depth. The material must exhibit residual stresses of 2 mm maximum deflection, and flatness of 1.6 mm over 685 mm length.

Certain stainless steel foil for automotive catalytic converters is also excluded from the scope of this review. This stainless steel strip in coils is a specialty foil with a thickness of between 20 and 110 microns used to produce a metallic substrate with a honeycomb structure for use in automotive catalytic converters. The steel contains, by weight, carbon of no more than 0.030 percent, silicon of no more than 1.0 percent, manganese of no more than 1.0 percent, chromium of between 19 and 22 percent, aluminum of no less than 5.0 percent, phosphorus of no more than 0.045 percent, sulfur of no more than 0.03 percent, lanthanum of less than 0.002 or greater than 0.05 percent, and total rare earth elements of more than 0.06 percent, with the balance iron.

Permanent magnet iron-chromium-cobalt alloy stainless strip is also excluded from the scope of this order. This ductile stainless steel strip contains, by weight, 26 to 30 percent chromium, and 7 to 10 percent cobalt, with the remainder of iron, in widths 228.6 mm or less, and a thickness between 0.127 and 1.270 mm. It exhibits magnetic remanence between 9,000 and 12,000 gauss, and a coercivity of between 50 and 300 oersteds. This product is most commonly used in electronic sensors and is currently available under proprietary trade names such as ''Arnokrome III.''[3]

Certain electrical resistance alloy steel is also excluded from the scope of this review. This product is defined as a non-magnetic stainless steel manufactured to American Society of Testing and Materials (''ASTM'') specification B344 and containing, by weight, 36 percent nickel, 18 percent chromium, and 46 percent iron, and is most notable for its resistance to high temperature corrosion. It has a melting point of 1390 degrees Celsius and displays a creep rupture limit of 4 kilograms per square millimeter at 1000 degrees Celsius. This steel is most commonly used in the production of heating ribbons for circuit breakers and industrial furnaces, and in rheostats for railway locomotives. The product is currently available under proprietary trade names such as ''Gilphy 36.''[4]

Certain martensitic precipitation-hardenable stainless steel is also excluded from the scope of this order. This high-strength, ductile stainless steel product is designated under the Unified Numbering System (''UNS'') as S45500–grade steel, and contains, by weight, 11 to 13 percent chromium, and 7 to 10 percent nickel. Carbon, manganese, silicon and molybdenum each comprise, by weight, 0.05 percent or less, with phosphorus and sulfur each comprising, by weight, 0.03 percent or less. This steel has copper, niobium, and titanium added to achieve aging, and will exhibit yield strengths as high as 1700 Mpa and ultimate tensile strengths as high as 1750 Mpa after aging, with elongation percentages of 3 percent or less in 50 mm. It is generally provided in thicknesses between 0.635 and 0.787 mm, and in widths of 25.4 mm. This product is most commonly used in the manufacture of television tubes and is currently available under proprietary trade names such as ''Durphynox 17.''[5]

Also excluded are three specialty stainless steels typically used in certain industrial blades and surgical and medical instruments. These include stainless steel strip in coils used in the production of textile cutting tools (*e.g.*, carpet knives).[6] This steel is similar to AISI grade 420 but containing, by weight, 0.5 to 0.7 percent of molybdenum. The steel also contains, by weight, carbon of between 1.0 and 1.1 percent, sulfur of 0.020 percent or less, and includes between 0.20 and 0.30 percent copper and between 0.20 and 0.50 percent cobalt. This steel is sold under proprietary names such as ''GIN4 Mo.''[7] The second excluded stainless steel strip in coils is similar to AISI 420–J2 and contains, by weight, carbon of between 0.62 and 0.70 percent, silicon of between 0.20 and 0.50 percent, manganese of between 0.45 and 0.80 percent, phosphorus of no more than 0.025 percent and sulfur of no more than 0.020 percent. This steel has a carbide density on average of 100 carbide particles per 100 square microns. An example of this product is ''GIN5''[8] steel. The third specialty steel has a chemical composition similar to AISI 420 F, with carbon of between 0.37 and 0.43 percent, molybdenum of between 1.15 and 1.35 percent, but lower manganese of between 0.20 and 0.80 percent, phosphorus of no more than 0.025 percent, silicon of between 0.20 and 0.50 percent, and sulfur of no more than 0.020 percent. This product is supplied with a hardness of more than Hv 500 guaranteed after customer processing, and is supplied as, for example, ''GIN6.''[9]

Product Comparisons

In accordance with section 771(16) of the Act, we considered all SSSS products covered by the ''Scope of the Review'' section of this notice, *supra*, which were produced and sold by TKAST in the home market during the POR, to be foreign like products for the purpose of determining appropriate product comparisons to U.S. sales of SSSS products. We relied on nine characteristics to match U.S. sales of subject merchandise to comparison sales of the foreign like product (listed in order of preference): (1) Grade; (2) hot/cold rolled; (3) gauge; (4) surface finish; (5) metallic coating; (6) non-metallic coating; (7) width; (8) temper; and (9) edge trim. For the grade product characteristic, TKAST reported additional grades which were specifically permitted by the Department's questionnaire. *See* Analysis Memorandum for ThyssenKrupp Acciai Speciali Terni S.p.A.: Preliminary Results of the 2000–2001 Administrative Review of Stainless Steel Sheet and Strip in Coils from Italy (July 26, 2002) (''*Analysis Memo*''). Where there were no sales of identical merchandise in the home market to compare to U.S. sales, we compared U.S. sales to the next most similar foreign like product on the basis of the characteristics and reporting instructions listed in the Department's questionnaire.

Export Price/Constructed Export Price

In accordance with section 772(a) of the Act, export price (''EP'') is the price at which the subject merchandise is first

[3] ''Arnokrome III'' is a trademark of the Arnold Engineering Company.

[4] ''Gilphy 36'' is a trademark of Imphy, S.A.

[5] ''Durphynox 17'' is a trademark of Imphy, S.A.

[6] This list of uses is illustrative and provided for descriptive purposes only.

[7] ''GIN4 Mo'' is the proprietary grade of Hitachi Metals America, Ltd.

[8] ''GIN5'' is the proprietary grade of Hitachi Metals America, Ltd.

[9] ''GIN6'' is the proprietary grade of Hitachi Metals America, Ltd.

sold (or agreed to be sold) before the date of importation by the producer or exporter of the subject merchandise outside of the United States to an unaffiliated purchaser in the United States or to an unaffiliated purchaser for exportation to the United States. In accordance with section 772(b) of the Act, constructed export price (''CEP'') is the price at which the subject merchandise is first sold (or agreed to be sold) in the United States before or after the date of importation by or for the account of the producer or exporter of such merchandise or by a seller affiliated with the producer or exporter, to a purchaser not affiliated with the producer or exporter.

For purposes of this review, TKAST originally classified its U.S. sales as EP and CEP sales. *See* Section A supplemental response at Exhibit A–32. TKAST also argued that it is entitled to a CEP offset with respect to its CEP sales in the United States. See Section A response at A–21. For further discussion on CEP offset, see the ''Level of Trade'' section, *infra*. TKAST later reclassified its EP sales as CEP sales, pursuant to Departmental request. *See* Section C supplemental response at 3. Based on the information on the record, we preliminarily find that all of TKAST's U.S. sales are appropriately classified as CEP sales.

TKAST reported that it sold the subject merchandise in the United States through three channels (*i.e.*, Channels one, two and three). Channel two sales are made from the inventory of TKAST's U.S. based affiliated reseller, TKAST USA. Channel three sales involve subject merchandise that is sold by TKAST USA to an affiliated U.S. reseller (*i.e.*, Ken-Mac), who may or may not further manufacture the merchandise before reselling it to an unaffiliated customer. Therefore, because sales in channels two and three are sold from the inventory of TKAST's U.S. affiliated resellers, it is appropriate to classify these sales as CEP sales.

With respect to channel one sales, TKAST reported that these sales are shipped directly from the factory in Italy to the U.S. customer. However, TKAST USA serves as the principal point of contact for the U.S. customer. For channel one sales, customers place their orders with TKAST USA, which then places an order with TKAST. Upon confirmation from TKAST, TKAST USA separately issues an invoice to the customer. TKAST USA is solely responsible for collecting payment from the U.S. customer, and separately responsible for paying TKAST for the merchandise. TKAST USA separately invoiced and received payment from those customers. Accordingly, the Department preliminarily determines that TKAST's channel one sales were made ''in the United States'' within the meaning of section 772(b) of the Act and should be treated as CEP transactions, consistent with *AK Steel Corp.* v. *United States*, 226 F.3d 1361, 1374 (Fed. Cir. 2000).

We calculated CEP in accordance with section 772(b) of the Act. We based CEP on the packed, CIF or FOB prices to the first unaffiliated customer in the U.S. market. We made adjustments to the starting price for billing adjustments and the alloy surcharge, where applicable. Where appropriate, we made deductions from the starting price for credit, repacking, skid charges, and Ken-Mac commissions. We also made deductions for the following movement expenses, where appropriate, in accordance with section 772(c)(2)(A) of the Act: international freight, U.S. inland freight from warehouse/plant to the unaffiliated customer, Ken-Mac's U.S. inland freight from warehouse/plant to the unaffiliated customer, Ken-Mac warehousing expense, other U.S. transportation expense, U.S. Customs duties, and freight equalization charges. In accordance with section 772(d)(1) of the Act, we deducted selling expenses associated with economic activities occurring in the United States, including technical services expenses, inventory carrying costs, and other indirect selling expenses. We recalculated the insurance revenue factor based on subject merchandise only. *See Analysis Memo* and *Verification Report*.

For products that were further manufactured after importation, we adjusted for all costs of further manufacturing in the United States in accordance with section 772(d)(2) of the Act. We deducted the profit allocated to expenses deducted under sections 772(d)(1) and (d)(2) in accordance with sections 772(d)(3) and 772(f) of the Act. In accordance with section 772(f) of the Act, we computed profit based on total revenues realized on sales in both the U.S. and home markets, less all expenses associated with those sales. We then allocated profit to expenses incurred with respect to U.S. economic activity, based on the ratio of total U.S. expenses to total expenses for both the U.S. and home market.

Normal Value

After testing home market viability, we calculated NV as noted in the ''Price-to-CV Comparisons'' and ''Price-to-Price Comparisons'' sections of this notice.

1. *Home Market Viability*

In accordance with section 773(a)(1)(C) of the Act, to determine whether there was a sufficient volume of sales in the home market to serve as a viable basis for calculating normal value (''NV'') (*i.e.*, the aggregate volume of home market sales of the foreign like product is greater than or equal to five percent of the aggregate volume of U.S. sales), we compared TKAST's volume of home market sales of the foreign like product to the volume of its U.S. sales of the subject merchandise. Pursuant to sections 773(a)(1)(B) and (C) of the Act, because TKAST's aggregate volume of home market sales of the foreign like product was greater than five percent of its aggregate volume of U.S. sales for the subject merchandise, we determined that sales in the home market provide a viable basis for calculating NV. We therefore based NV on home market sales to unaffiliated purchasers and to those affiliated customer sales which passed the arm's length test, as discussed in the ''Arm's Length Test'' section of this notice, *infra*, made in the usual commercial quantities and in the ordinary course of trade.

Thus, we used as NV the prices at which the foreign like product was first sold for consumption in Italy, in the usual commercial quantities, in the ordinary course of trade, and, to the extent possible, at the same level of trade (''LOT'') as the constructed export price (''CEP'') or NV sales, as appropriate. After testing home market viability and whether home market sales were at below-cost prices, we calculated NV as noted in the ''Price-to-Price Comparisons'' and ''Price-to-Constructed Value (''CV'') Comparisons'' sections of this notice.

Arm's Length Test

During the POR, TKAST reported that it made sales of subject merchandise in the home market to affiliated customers (resellers and end-users). If any sales to affiliated customers in the home market were not made at arm's length prices, we excluded them from our analysis because we considered them to be outside the ordinary course of trade. To test whether these sales were made at arm's-length prices, we compared on a model-specific basis the starting prices of sales to affiliated and unaffiliated customers, net of all billing adjustments, rebates, movement charges, direct selling expenses, and home market packing. Where, for the tested models of subject merchandise, prices to the affiliated party were on average 99.5 percent or more of the price to the unaffiliated parties, we determine that

sales made to the affiliated party were at arm's-length. *See* 19 CFR 351.403(c); *Antidumping Duties; Countervailing Duties; Final Rule*, 62 FR 27296, 27355 (May 19, 1997). In our home market NV calculation, we have included TKAST's sales to certain of its affiliated customers because these entities passed the Department's arm's length test criteria. Conversely, certain other affiliated customers did not pass the arm's length test and have therefore been excluded from our home market NV calculation. For a further discussion of home market sales made by TKAST to affiliated resellers who failed the arm's length test, please see the ''Facts Available'' section below.

Price-to-Price Comparisons

For those product comparisons for which there were sales at prices above the COP, we based NV on the home market delivered prices to unaffiliated customers or prices to affiliated customers that we determined to be at arm's length. We made adjustments, where appropriate, for physical differences in the merchandise in accordance with section 773(a)(6)(C)(ii) of the Act. Where appropriate, we deducted early payment discounts, rebates, credit expenses, warranty expenses, and inland freight. We also adjusted the starting price for billing adjustments and the alloy surcharge. In accordance with section 773(a)(6), we deducted home market packing costs and added U.S. packing costs. Finally, in accordance with section 773(b)(1) of the Act, where there were no usable contemporaneous matches to a U.S. sale observation, we based NV on CV.

We have recalculated certain billing adjustments to be early payment discounts because it appears that early payment discounts were applicable only on certain home market sales during the POR. When a certain payment term code was reported and a billing adjustment was applied, the Department has recategorized the billing adjustment as an early payment discount in those instances. *See Analysis Memo*. Additionally, we have disallowed TKAST's home market insurance revenue adjustment. At verification, the Department discovered that TKAST could have reported home market insurance revenue on a sales specific basis and should not have allocated this adjustment over the entire home market database. *See Analysis Memo* and *Verification Report*. Also, we have recalculated TKAST's inventory carrying costs to include the alloy surcharge in the gross unit price and a new average inventory days. At verification, we discovered that TKAST's average days in inventory did not include fiscal year 2001. *See Analysis Memo* and *Verification Report*.

For reasons discussed below in the ''Level of Trade'' section, we have not granted TKAST a CEP offset.

Price-to-CV Comparisons

In accordance with section 773(a)(4) of the Act, we based NV on CV if we were unable to find a home market match of identical or similar merchandise. We calculated CV based on the costs of materials and fabrication employed in producing the subject merchandise, selling, general and administrative expenses (''SG&A''), and profit. In accordance with section 773(e)(2)(A) of the Act, we based SG&A expense and profit on the amounts incurred and realized by the respondent in connection with the production and sale of the foreign like product in the ordinary course of trade for consumption in Italy. For selling expenses, we used the weighted-average home market selling expenses. Where appropriate, we made adjustments to CV in accordance with section 773(a)(8) of the Act. We deducted from CV the weighted-average home market direct selling expenses.

2. Cost of Production

In the original investigation, the Department determined that TKAST made sales in the home market at prices below the cost of production (''COP'') and, therefore, excluded such sales from NV. *See Notice of Final Determination of Sales at Less Than Fair Value: Stainless Steel Sheet and Strip in Coils From Italy*, 64 FR 30750, 30754–55 (June 8, 1999). Accordingly, the Department had reasonable grounds to believe or suspect that TKAST made sales in the home market at prices below the COP for this POR. *See* section 773(b)(2)(A)(ii) of the Act. As a result, pursuant to section 773(b)(1) of the Act, we conducted a COP analysis of home market sales by TKAST.

A. Calculation of the COP

In accordance with section 773(b)(3) of the Act, we calculated the COP based on the sum of TKAST's cost of materials and fabrication for the foreign like product, plus amounts for home market selling, general and administrative expenses (''SG&A''), interest expenses, and packing costs. We relied on the COP data submitted by TKAST in its original and supplemental cost questionnaire responses. For these preliminary results, we did not make any adjustments to TKAST's submitted costs.

B. Test of Home Market Prices

We compared the weighted-average COP for TKAST to its home market sales of the foreign like product, as required under section 773(b) of the Act, in order to determine whether these sales had been made at prices below the COP. In determining whether to disregard home market sales made at prices less than the COP, we examined whether such sales were made: (1) in substantial quantities within an extended period of time; and (2) at prices which permitted the recovery of all costs within a reasonable period of time, in accordance with sections 773(b)(1)(A) and (B) of the Act. We compared the COP to home market prices, less any applicable billing adjustments, movement charges, discounts, and direct and indirect selling expenses.

C. Results of the COP Test

Pursuant to section 773(b)(2)(C) of the Act, where less than 20 percent of TKAST's sales of a given product were, within an extended period of time, at prices less than the COP, we did not disregard any below-cost sales of that product because we determined that the below-cost sales were not made in ''substantial quantities.'' Where 20 percent or more of TKAST's sales of a given product during the POR were at prices less than the COP, we determined such sales to have been made in ''substantial quantities'' within an extended period of time, in accordance with sections 773(b)(2)(B) of the Act. In such cases, because we used POR average costs, we also determined that such sales were not made at prices which would permit recovery of all costs within a reasonable period of time, in accordance with section 773(b)(2)(D) of the Act. We compared the COP for subject merchandise to the reported home market prices less any applicable movement charges. Based on this test, we disregarded below-cost sales. Where all sales of a specific product were at prices below the COP, we disregarded all sales of that product.

D. Calculation of Constructed Value

In accordance with section 773(e)(1) of the Act, we calculated constructed value (''CV'') based on the sum of TKAST's cost of materials, fabrication, SG&A (including interest expenses), U.S. packing costs, direct and indirect selling expenses, and profit. As noted in the ''Calculation of the COP'' section, *supra*, we made no adjustments to TKAST's reported cost. In accordance with section 773(e)(2)(A) of the Act, we based SG&A and profit on the amounts incurred and realized by TKAST in

connection with the production and sale of the foreign like product in the ordinary course of trade, for consumption in the foreign country. For selling expenses, we used the actual weighted-average home market direct and indirect selling expenses.

Level of Trade

In accordance with section 773(a)(1)(B) of the Act, to the extent practicable, we determine NV based on sales in the comparison market at the same level of trade (''LOT'') as the EP or CEP transaction. The NV LOT is that of the starting-price sales in the comparison market or, when NV is based on CV, that of the sales from which we derive SG&A expenses and profit. For EP sales, the LOT is also the level of the starting-price sale, which is usually from the exporter to the importer. For CEP sales, the LOT the level of the constructed sale from the exporter to the affiliated importer. *See* 19 C.F.R. 351.412(c)(1). As noted in the ''Export Price/Constructed Export Price'' section, *supra*, , we preliminarily find that all of TKAST's U.S. sales are appropriately classified as CEP sales.

To determine whether NV sales are at a different LOT than EP or CEP sales, we examine stages in the marketing process and selling functions along the chain of distribution between the producer and the unaffiliated customer. Substantial differences in selling activities are a necessary, but not sufficient condition for determining that there is a difference in the stage of marketing. *See* 19 C.F.R. 351.412(c)(2). If the comparison market sales are at a different LOT, and the difference affects price comparability, as manifested in a pattern of consistent price differences between the sales on which NV is based and comparison-market sales at the LOT of the export transaction, we make a LOT adjustment under section 773(a)(7)(A) of the Act. Finally, for CEP sales, if the NV level is more remote from the factory than the CEP level and there is no basis for determining whether the differences in the levels between NV and CEP sales affect price comparability, we adjust NV under section 773(A)(7)(B) of the Act (the CEP offset provision). *See Notice of Final Determination of Sales at Less Than Fair Value: Certain Cut-to-Length Carbon Steel Plate from South Africa*, 62 FR 61731, 61732 (November 19, 1997).

In the present administrative review, TKAST requested a CEP offset. To determine whether a CEP offset was necessary, in accordance with the principles discussed above, we examined information regarding the distribution systems in both the United States and Italian markets, including the selling functions, classes of customer, and selling expenses.

TKAST reported one LOT in the home market, with two channels of distribution: (1) direct factory sales to end-users, manufacturers, service centers and distributors; and (2) warehouse sales to end-users, service centers and distributors. TKAST performed the same selling functions for sales in both home market channels of distribution, including production guidance, price negotiations, sales calls and services, arranging for freight and delivery, technical assistance and general selling activities. The only differences are that in warehouse sales TKAST initiates the sale (whereas direct sales are initiated by either party) by distributing a ''Pronto'' list of available inventory to potential customers, and warehouse sales typically carry no guarantee or warranty. Accordingly, because these selling functions are substantially similar for both channels of distribution, we preliminarily determine that there is one LOT in the home market.

TKAST reported two LOTs in the U.S. market, with three channels of distribution: (1) Direct factory sales through TKAST USA to end-users and service centers; (2) warehouse sales from the inventory of TKAST USA to end-users and service centers; and (3) sales from the mill through TKAST USA to Ken-Mac, its affiliated U.S. further manufacturer/reseller, which then sells to unaffiliated customers. TKAST performed many of the same selling functions for sales in all three U.S. market channels of distribution, including approaching the customer in conjunction with TKAST USA, processing TKAST USA inquiries and purchase orders, offering production and pricing guidance, invoicing TKAST USA, arranging for freight and delivery to the U.S. port, and general selling activities. Accordingly, because these selling functions are substantially similar for the three channels of distribution, we preliminarily determine that there is one LOT in the U.S. market.

In comparing TKAST's home market and U.S. market sales, it appears that TKAST offered many of the same selling functions in both market, including production and pricing guidance, invoicing, arranging for freight and delivery, technical service and other general selling activities. Accordingly, we preliminarily determine that sales in the home market and in the U.S. market were made at the same LOT and have not granted a CEP offset.

Facts Available

We preliminarily determine that the use of facts available is appropriate for one element of TKAST's dumping margin calculation. Section 776(a)(2) of the Act provides that if an interested party: (A) Withholds information that has been requested by the Department; (B) fails to provide such information in a timely manner or in the form or manner requested, subject to subsections 782(c)(1) and (e) of the Act; (C) significantly impedes a determination under the antidumping statute; or (D) provides such information but the information cannot be verified, the Department shall, subject to subsection 782(d) of the Act, use facts otherwise available in reaching the applicable determination.

Consistent with section 776(a)(2)(A)(B) and (C) of the Act, we preliminarily determine that use of facts available is warranted for home market sales made to certain affiliated resellers who failed the arm's length test. The Department's original August 31, 2001, section B questionnaire requests that TKAST ''report only the resales by the affiliated reseller to unaffiliated customers.'' The Department further requested in the August 31, 2001 section A questionnaire that TKAST exclude its ''sales to affiliated resellers'' and instead report the ''resales by the affiliates to unaffiliated customers.'' On March 14, 2002, the Department further stated that TKAST must report the downstream sales of the affiliates with whom its sales were not on an arm's length basis.

On September 21, 2001, TKAST submitted a letter to the Department which stated that it did not intend to submit home market sales data by the customer that it claimed failed the arm's length test because it accounted for only a portion of TKAST's total home market sales during the POR. TKAST further stated that TKAST did not have access to the sales and other data for companies that are not majority owned by it and could not compel such companies to provide such information. On November 5, 2001, TKAST stated that it had only reported the ''home market sales to, rather than downstream sales by, its affiliated resellers of the foreign like product in the home market.'' Regarding those affiliates to whom TKAST maintained that it sold on an arm's length basis, TKAST stated that their downstream sales would not be used by the Department for matching purposes in any event. It further stated that ''such sales are not necessary to the Department's analysis because home market sales of the same or similar products to unaffiliated companies

provide ample matches'' to TKAST's U.S. sales. On March 21, 2002, TKAST submitted a letter in which it requested that the Department not require the reporting of downstream sales by a certain affiliate of TKAST.

On March 27, 2002, the Department denied this request in a letter to TKAST. The Department stated the following:

As stated in the Department's original questionnaire, dated August 31, 2001, at G–6: You must report all your sales to affiliated customers. If the Department determines that your sales to affiliated customers are at arm's length, the Department will use these sales in its analysis. For sales to affiliated resellers, you must report the sales from the affiliated resellers to the unaffiliated customers. However, if sales to all affiliated customers constitute less than 5% of your total sales in the foreign market, or if you are unable to collect information on such resales, please notify the official in charge in writing immediately so that the Department may consider a possible exemption.

In your September 21, 2001 section A response, at A–3, you failed to show that sales to all affiliated customers constituted less than 5% of your total sales in the foreign market, nor did you indicate you were unable to collect information on resales by the affiliate, although you recognized that sales to this affiliate failed the arm's length test. Accordingly, the Department restated in its Supp. A-C questionnaire, at question 3, that pursuant to section 351.403(d):

As the table on your affiliates' percentage of sales (at A–30) indicates that your sales to *all* affiliated parties do not account for less than five percent of the total sales, you must report the downstream home market sales by {the affiliate} and revise your database accordingly.

Please note that if you fail to provide accurately the information requested within the time provided, the Department may be required to base its findings on the facts available. If you fail to cooperate with the Department by not acting to the best of your ability to comply with a request for information, the Department may use information that is adverse to your interest in conducting its analysis.

Accordingly, the Department is requiring that AST report the downstream sales of the aforementioned affiliate. However, we are granting AST an extension of time in which to report the affiliate's downstream sales until c.o.b. April 29, 2002. If you are unable to collect the requested information on the affiliates resales, please notify the official in charge in writing immediately. We note that failure to provide the requested information may require us to use information that is based on facts available. Moreover, should the Department find that you failed to cooperate by not acting to your best of your ability, we may use information that is based on adverse facts available.

On May 1, 2002, in response to TKAST's request of April 29, 2002, the Department further extended the deadline for the reporting of downstream sales to May 13, 2002.

On May 13, 2002, TKAST provided a limited amount of downstream sales information. TKAST maintained in this submission that the information it provided was the best that it was able to extract and that it was not in a ''position to compel the companies to comply with requests for information.''

TKAST failed to provide its downstream sales made by certain affiliated resellers as requested by the Department in its August 31, 2001, and March 14 and 27, 2002, original questionnaire and supplemental questionnaires, respectively, in a format that is usable by the Department. Therefore, consistent with section 776(a)(2)(A)(B) and (C) of the Act, TKAST withheld information that had been requested by the Department, failed to provide such information in a timely manner or in the form or manner requested, and significantly impeded the determination under the antidumping statute, justifying the use facts otherwise available in reaching the applicable determination. Therefore, we preliminarily determine that use of facts available is warranted for home market sales made to certain affiliated resellers who failed the arm's length test.

For these preliminary results, the Department has disregarded all affiliated resellers sales that failed the arm's length test, and has used the remaining home market sales in its margin calculation.

Currency Conversion

For purposes of the preliminary results, we made currency conversions in accordance with section 773A of the Act, based on the official exchange rates in effect on the dates of the U.S. sales as certified by the Federal Reserve Bank of New York. Section 773A(a) of the Act directs the Department to use the daily exchange rate in effect on the date of sale in order to convert foreign currencies into U.S. dollars, unless the daily rate involves a ''fluctuation.'' In accordance with the Department's practice, we have determined as a general matter that a fluctuation exists when the daily exchange rate differs from a benchmark by 2.25 percent. *See*, *e.g.*, *Certain Stainless Steel Wire Rods from France; Preliminary Results of Antidumping Duty Administrative Review*, 61 FR 8915, 8918 (March 6, 1998), and Policy Bulletin 96–1: Currency Conversions, 61 FR 9434 (March 8, 1996). The benchmark is defined as the rolling average of rates for the past 40 business days. When we determine a fluctuation exists, we substitute the benchmark for the daily rate.

Preliminary Results of Review

As a result of our review, we preliminarily determine that the following weighted-average dumping margin exists for the POR:

Producer/Manufacturer/ Exporter	Weighted-Average Margin
ThyssenKrupp Acciai Speciali Terni S.p.A.	3.49%

In accordance with 19 CFR 351.224(b), the Department will disclose to the parties to this proceeding the calculations performed in connection with these preliminary results within five days of the date of publication of this notice.

Pursuant to 19 CFR 351.309, interested parties may submit written comments and/or case briefs on these preliminary results. Comments and case briefs must be submitted no later than thirty days after the date of publication of this notice. Rebuttal comments and briefs must be limited to issues raised in the case briefs and comments, and must be submitted no later than five days after time limit for filing case briefs and comments. Parties submitting arguments in this proceeding are requested to submit with the argument: (1) a statement of the issue, and (2) a brief summary of the argument. Case and rebuttal briefs and comments must be served on interested parties in accordance with 19 CFR 351.303(f). Also, within thirty days of the date of publication of this notice, an interested party may request a public hearing on the arguments to be raised in the case and rebuttal briefs and comments. *See* 19 CFR 351.310(c). Unless otherwise specified, the hearing, if requested, will be held two days after the date for submission of rebuttal briefs, or the first working day thereafter. The Department will issue the final results of this administrative review, including the results of its analysis of issues raised in any case and rebuttal briefs and comments, within 120 days of publication of these preliminary results.

Assessment

Upon issuance of the final results of this administrative review, the Department shall determine, and the U.S. Customs Service (''Customs'') shall assess, antidumping duties on all appropriate entries. In accordance with 19 CFR 351.212(b), we have calculated exporter/importer-specific assessment rates. We calculated importer-specific duty assessment rates by dividing the total dumping margins for the reviewed sales by the total entered value of those reviewed sales for each importer. If these preliminary results are adopted in our final results, we will direct Customs not to assess antidumping duties on the merchandise subject to review. Upon completion of this review, the Department will issue appraisement instructions directly to Customs.

Cash Deposit

The following cash deposit requirements will be effective upon publication of the final results of this administrative review for all shipments of the subject merchandise entered, or withdrawn from warehouse, for consumption on or after the publication date of the final results of this administrative review, as provided by section 751(a)(1) of the Act: (1) The cash deposit rate for the reviewed company will be the rate established in the final results of this administrative review (except that no deposit will be required if the rate is zero or *de minimis*, *i.e.*, less than 0.5 percent); (2) for previously investigated companies not listed above, the cash deposit rate will continue to be the company-specific rate published for the most recent period; (3) if the exporter is not a firm covered in this review, a prior review, or the original LTFV investigation, but the manufacturer is, the cash deposit rate will be the rate established for the most recent period for the manufacturer of the merchandise; and (4) if neither the exporter nor the manufacturer is a firm covered in this review, a prior review, or the original LTFV investigation, the cash deposit rate will continue to be the ''all others'' rate of 11.23 percent, which is the all others rate established in the LTFV investigation. *See Notice of Amended Final Determination of Sales at Less Than Fair Value and Antidumping Duty Order; Stainless Steel Sheet and Strip in Coils From Italy*, 64 FR 40567 (July 27, 1999). These deposit requirements, when imposed, shall remain in effect until publication of the final results of the next administrative review.

Notification to Interested Parties

This notice also serves as a preliminary reminder to importers of their responsibility under 19 C.F.R. 351.402(f)(2) to file a certificate regarding the reimbursement of antidumping duties prior to liquidation of the relevant entries during this administrative review period. Failure to comply with this requirement could result in the Secretary's presumption that reimbursement of antidumping duties occurred and the subsequent assessment of double antidumping duties.

This determination is issued and published in accordance with sections 751(a)(1) and 777(i)(1) of the Act.

Dated: July 31, 2002.

Faryar Shirzad,

Assistant Secretary for Import Administration.

[FR Doc. 02–19993 Filed 8–6–02; 8:45 am]

BILLING CODE 3510–DS–S

DEPARTMENT OF COMMERCE

Notice of Availability of Revised Draft Restoration Plan and Environmental Assessment for the Applied Environmental Services (Shore Realty) Superfund Site

AGENCY: National Oceanic and Atmospheric Administration, Department of Commerce

ACTION: Notice of availability; request for comments.

SUMMARY: The National Oceanic and Atmospheric Administration (NOAA), of the U.S. Department of Commerce, hereby gives notice of the availability of the Revised Draft Restoration Plan and Environmental Assessment for the Applied Environmental Services (Shore Realty) Superfund Site for public review. NOAA, the U.S. Fish and Wildlife Service (USFWS), of the U.S. Department of the Interior (DOI), and the State of New York (New York), share trusteeship authority over natural resources adversely affected by releases of hazardous substances from the Shore Realty Superfund Site (the Site) and are collectively referred to as the Natural Resource Trustees (the Trustees) for the Site. NOAA, the lead administrative Trustee, in consultation with the USFWS and New York, prepared this Revised Draft Restoration Plan and Environmental Assessment (Revised Draft RP/EA).

The original Draft RP/EA was published in the **Federal Register** on November 9, 2001 and a 30-day public notice and comment period was provided. See **Federal Register**, Volume 66, Number 218. No public comments were received. The primary difference between this Revised Draft RP/EA and the original Draft RP/EA is that the Trustees now propose to use all or part of an additional $50,000 in natural resources damages which was paid to the Federal Trustees by the Performing Parties Group (an entity composed of cooperating past and current owners, operators and generators who share liability for the releases from the Site, hereinafter referred to as ''the PPG''), and set it aside to be used for off-site, compensatory restoration, to supplement the preferred restoration alternative—the North Hempstead Bar Beach Lagoon Project.

The public is invited to submit written comments on this Revised Draft RP/EA to the Trustees. Any and all written comments received on or before August 22, 2002 will be considered. The Trustees will respond to any comments received through revision of this Revised Draft RP/EA, incorporation into the Final Restoration Plan, or by letter to the commentor, after the close of the comment period. The Final Restoration Plan will then be published.

DATES: The Trustees will accept written comments on the Revised Draft Restoration Plan and Environmental Assessment through August 22, 2002.

ADDRESSES: A copy of this Revised Draft Restoration Plan and Environmental Assessment is available for review during office hours at the following locations: (1) Michelle Schimel, Town Clerk, Town of North Hempstead, 200 Plandome Road, Manhassett, NY 11030 (516–869–7646); (2) EPA Administrative Records Office, 290 Broadway, 18th Floor, New York, NY 10007 (212–637–4308); (3) Bryant Library, 2 Paper Mill Road, Roslyn, NY (516–621–2240); (4) Port Washington Library, Manorhaven Blvd., Port Washington (515–883–4400); (5) Lisa Holst, Long Island Sound Study Habitat Restoration, NYSDEC Bureau of Marine Resources, 205 North Belle Meade Road, Suite 1, East Setauket, NY (631–444–0469); (6) Steve Sanford , NYSDEC, Division of Fish, Wildlife, and Marine Resources, 625 Broadway, Albany, NY (518–402–8997). It is also available on NOAA's web page (*http://response.restoration.noaa.gov/cpr/library/publications.html*) or through a link on USFWS's web page (*http://contaminants.fws.gov/Issues/Restoration.cfm*). NOAA will accept written comments addressed to: Lisa Rosman, NOAA/CPRD, via fax to 212–637–4207 or email at *lisa.rosman@noaa.gov*.

FOR FURTHER INFORMATION CONTACT: Lisa Rosman, NOAA Coastal Resource Coordinator, at 212–637–3259.

SUPPLEMENTARY INFORMATION:

I. Background

The Applied Environmental Services Superfund Site (the Site), also known as the Shore Realty Superfund Site, is a 3.2 acre area located in Glenwood Landing, Nassau County, New York. Part of the Site is a peninsula surrounded by the waters of Motts Cove and Hempstead Harbor, located off of Long Island Sound. The Site was first used to store petroleum products in 1939. Subsequently, the Site was used for the distribution and storage of chemical solvents and the operation of a hazardous waste facility. Beginning in 1974, numerous organic chemical spills were reported to have occurred, including a 1978 spill of about 3,000 gallons of toluene. Several hazardous substances and materials, as defined by the U.S. Environmental Protection Agency (USEPA), and listed at 40 CFR 302.4, in accordance with Section 102(a) of the Comprehensive Environmental Response, Compensation, and Liability Act (CERCLA), contaminated the soil, groundwater, surface water, sediment, and air of the Site, including toluene, xylene, ethylbenzene, naphthalene, phthalates, and polychlorinated biphenlys (PCBs). *See*, 40 CFR 302.4. and 42 U.S.C. 9602. In accordance with Section 105 of CERCLA, the USEPA placed the Site on the National Priorities List in June, 1986. *See* 42 U.S.C. 9605(8)(B) and 40 CFR 300, Appendix B.

In 1991, the USEPA issued a Record of Decision (ROD) for the Site. The selected remedy for the site included: active venting, by vacuum extraction, of contaminated soils; collection of contaminated groundwater and treatment by air-stripping; re-injection of treated groundwater, nutrients, and a chemical source of oxygen, to stimulate natural remediation of groundwater and saturated soils; and treatment of contaminant-laden vapors. The treatment plant has been operating since July of 1995 and will continue operation until site sampling data and analysis show that the performance standards set forth in the ROD are met. The performance standards include: reduction of concentrations of benzene, methylene chloride, and organic contaminants in soils to conformity with applicable state and Federal standards; reduction of contaminants in groundwater to levels equal to or less than the groundwater standards for the State of New York; indirect remediation of Site sediments by treating contamination in other Site media (soils and groundwater) which serve as the source of contaminants to the sediments; elimination of exceedance of ambient air standards over the mudflats of the Site; and elimination of sheen on surface waters to comply with applicable surface water standards.

Under CERCLA, owners and operators of facilities where hazardous wastes were located, and those who generated or transported the hazardous substances, are liable for response costs and damages for ''injury to, destruction of, or loss of natural resources,'' including the reasonable costs of assessing those natural resource damages (42 U.S.C. 9607(a)). The President of the United States, and the Governor of each state whose resources have been affected by releases from a Site, have the authority to ''act on behalf of the public as trustees of such natural resources to recover such damages.'' (*See* 42 U.S.C. 9607(F)(1).) In accordance with CERCLA, the President delegated this Trustee authority to the U.S. Department of Commerce (DOC), and the U.S. Department of the Interior (DOI) (42 U.S.C. 9607(f)(2)). The Secretary of Commerce delegated DOC Trustee authority to the National Oceanic and Atmospheric Administration (NOAA). The Secretary of the Interior delegated DOI Trustee authority to the U.S. Fish and Wildlife Service (USFWS).

The Site is located in Glenwood Landing, Nassau County, New York. Therefore, the Federal Trustees, NOAA and the USFWS, share Trustee authority with the State of New York. The Governor of New York delegated Trustee authority to the New York State Department of Environmental Conservation (NYSDEC).

NYSDEC, NOAA, and the USFWS cooperatively serve as the Natural Resource Trustees (the Trustees) for the natural resources affected by releases of hazardous substances at, or from, the Site. The Trustees are responsible for recovering damages for ''injury to, loss of, or destruction of natural resources.'' (*See* 42 U.S.C. 9607 (f)(1).) The Trustees must use any recovered funds to ''restore, replace, or acquire the equivalent of '' the natural resources that have been injured by a release of a hazardous substance (42 U.S.C. 9607 (f)(1)). Approximately 2 to 3 acres of mudflat and saltmarsh cordgrass (Spartina alterniflora) were severely impacted as a result of hazardous releases at and from the Site. The Trustees are in the process of selecting a restoration project to address natural resource injuries and ecological service losses which resulted from the release of hazardous substances from the Site.

In 1992, the United States, the State of New York, and the Performing Parties Group (an entity composed of cooperating past and current owners, operators and generators who share liability for the releases from the Site, hereinafter referred to as ''the PPG'') entered into a Consent Judgment settling the liability of the responsible parties under CERCLA for response costs, natural resource damages, and the costs of assessing those damages related to the Site.

Section X of the 1992 Consent Judgment specifically requires the PPG to restore saltmarsh in the mudflats to the east and south of the Site, in Hempstead Harbor and Motts Cove, after it is determined that '' * * * discharges to the shoreline and mud flats adjacent to the Site have been sufficiently abated by the remedial program.'' The Consent Judgment specifies that the PPG must plant saltmarsh grasses (*e.g.*, Spartina alterniflora, S. patens, and/or Distichlis spicata) in these areas and may also need to regrade the sediments. If the initial plantings are unsuccessful, the PPG would be required to plant more halophytic grasses to ensure that the vegetation is sustainable and able to support biota, including marine and/or estuarine fish and invertebrate species. However, the Consent Judgment does not require the PPG to physically alter the mudflats (*e.g.*, alter the elevation) to achieve optimal survival of the saltmarsh grasses over the broadest area. The PPG's monetary liability for performance of the on-site restoration is limited to $50,000. The PPG is also required to remit to the Trustees the sum of $60,000 for ''the design and implementation of a post-planting monitoring program,'' to determine the functional success of the wetlands restoration.

The Trustees have determined, and the PPG agrees, that the restoration actions due to be implemented in areas of the Hempstead Harbor inlet and Motts Cove adjacent to the Site, should be relocated off-Site. The parties have concerns regarding the potential success of on-site restoration, which are unrelated to historical releases of hazardous substances from the Site.

Two major factors have led to this determination. First, there are a number of nearby sources of pollution and debris that impact the original on-site restoration areas. Storm water runoff, from storm water culverts draining the adjacent county road and upgradient areas east of the Site, directly impacts the Hempstead Harbor inlet (the inlet) and Motts Cove. The inlet is a natural

collection point for trash and other floating debris in the Harbor. The inlet is not protected from wave action caused by marine traffic and storm events, and is also vulnerable to erosion events. The Motts Cove marsh area is adjacent to a boat marina, and is also a natural collection point for trash and other debris of various sizes, some of which is not readily removable (*e.g.,* large concrete-based dock). The inlet and Motts Cove are subject to trespassing and potential incidental dumping. Second, and of greatest concern to the Trustees and the PPG, the current water levels in the areas of Hempstead Harbor and Motts Cove adjoining the Site do not provide optimum conditions for the long-term survival of a saltmarsh community. Water depths on the Hempstead Harbor side (in the inlet) exceed those required for successful growth of Spartina for a substantial part of the area originally set aside for restoration. All of these factors would reduce the efficacy and acreage of S. alterniflora marsh ultimately restored in the areas. Likewise, the ecological services provided from such a restoration would be less than, or substantially different from, those originally envisioned.

Therefore, the Trustees have decided to seek an alternate restoration project/location to ensure that natural resources and the ecological services they provide are satisfactorily restored. This decision was made for the reasons discussed above, the restrictions set forth in Paragraph X.1. of the Consent Judgment, and the added costs to implement the activities (*i.e.,* debris removal, excavation, fill to grade etc.) that would be required for successful on-Site restoration, but are not required under the terms of the original Consent Judgment. As noted above, under the terms of the 1992 Consent Judgment, the PPG is not required to alter the elevation of the mudflats in order to make the area more suitable for salt marsh grasses, and the costs of altering the elevation would far exceed the PPG's $50,000 liability limit.

In lieu of conducting the restoration actions called for in the Consent Judgment, the Trustees and the PPG have explored other restoration options available in the vicinity of the Site. These options have a high probability of success and would produce ecological benefits at least equivalent to those derived from the restoration project presently required in the Consent Judgment. The PPG has indicated its desire to perform an alternative off-Site project for a cost not to exceed $50,000 (the PPG's maximum liability as specified in the original Consent Judgment). In addition, the PPG participated in the identification and review of potential restoration alternatives, and has agreed to fund the designs costs for the preferred restoration project. The PPG has also agreed to replace a deteriorating bulkhead at the site in order to further remediation efforts.

II. Explanation for a Revised Draft Restoration Plan/Environmental Assessment

The Trustees released a Draft Restoration Plan/Environmental Assessment for the Applied Environmental Services (aka Shore Realty) Site in June 2001. The project and document availability were announced in the **Federal Register** Vol. 66, No. 218, Nov 9, 2001. No comments were received. This Revised Draft RP/EA primarily differs from the June 2001 version in that the Trustees would like to use all or part of the $50,000 natural resource damage settlement paid to the Federal Trustees for an off-Site enhancement project at the preferred restoration project location. It also reflects the subsequent availability of a draft design document and a draft monitoring plan. Sections updated include site selection, project design, project monitoring and Coastal Zone Management Act.

III. Restoration Alternatives Considered and the Preferred Restoration Project Selected by the Natural Resource Trustees

The Trustees identified three desired characteristics for potential projects: (1) the habitat proposed to be restored must be similar in type to the habitat that was impacted, and potentially provide similar service; (2) the project must be in the same watershed as the impacted wetland; and, (3) the project must provide long-term or perpetual benefits to the impacted resources, including fish and wildlife. Thirteen alternative restoration proposals were considered, including: a No Action alternative, the on-Site, in-kind Restoration specified in the 1992 Consent Judgment, and eleven off-Site, in-kind projects. The Trustees comparatively evaluated each of the proposed alternatives based on seven additional selection criteria: effectiveness, protectiveness, technical feasibility, cross-benefits, collateral effects, consistency, and cost considerations. Details of the alternative analysis can be found in Section 2.2.2.2. of the Draft Restoration Plan and Environmental Assessment.

Below is a description of the preferred restoration alternative selected by the Trustees: the North Hempstead Bar Beach Lagoon Project. If this proposed project becomes final, the Trustees and the PPG will modify the 1992 Consent Judgment to specify that this off-Site project will be conducted in lieu of the on-Site restoration project specified in the 1992 Consent Judgment.

The North Hempstead Bar Beach Lagoon Project would be located in the Town of North Hempstead, on municipal land. The proposed project area is located across from the Site on the western shore of Hempstead Harbor and immediately east of West Shore Road in Port Washington, New York. The proposed restoration site is a 5 +/ − acre tidal cove situated within Bar Beach, a park owned by the Town of North Hempstead. The proposed project area consists of a mosaic of intertidal mudflat, sandflat, patchy low saltmarsh dominated by smooth cordgrass, and shellfish beds dominated by ribbed mussel and American oyster. Localized habitat loss and disturbances have degraded the habitat and adversely affected the full functioning of the saltmarsh.

The North Hempstead Bar Beach Lagoon Project will consist of several restoration components. Restoration tasks, listed in order of decreasing significance as determined by the Trustees, will likely include: Saltmarsh restoration, coastal shoreline restoration, Phragmites removal or control, and erosion control through the retrofitting of a culvert. Priorities may change upon input from the contractor selected to design and oversee the project.

The North Hempstead Bar Beach Lagoon Project would improve fish, bird, and shellfish habitat, enhance the detrital export functioning of this tidal community, and provide an opportunity for the public to enjoy this ecosystem due to its proximity to the North Hempstead Trail. Expected improvements include increased vegetative cover derived directly from plantings (approximately 0.6 acre) and indirectly from site enhancement. The latter could augment the density and coverage of the existing saltmarsh (approximately 2 acres). Amelioration of substrate conditions (*i.e.,* reduced erosion, reduced freshwater input) should increase the spatial coverage and/or density of Spartina over current conditions by fostering natural colonization. Habitat quality will improve due to increases in vegetative cover and structural complexity, thereby benefitting macroinvertebrates, fish and birds. Details of the project design can be found in Section 3.2 of the Draft Restoration Plan and Environmental Assessment.

The PPG would be primarily responsible for implementing the project. As noted above, the PPG's liability under the terms of the Consent Judgment is limited to $50,000. The available settlement funds would not be sufficient to address all of the ecological and anthropogenic challenges facing the proposed restoration area. Therefore, the Trustees, the PPG, and the Town of North Hempstead are working cooperatively with each other, and various nonprofit groups, to provide for the funding and implementation of additional projects in the same lagoon which will be conducted with, or complementary to, the North Hempstead Bar Beach Lagoon Project. The PPG has volunteered to pay for the restoration design for the North Hempstead Bar Beach Lagoon Project, in addition to their original $50,000 liability. The Town of North Hempstead has agreed to provide additional funding, goods, and services valued at approximately $59,896. The Town of North Hempstead received a NOAA/NMFS Community Outreach Grant of matching funds to partner with the Trustees and the PPG on the project. The Long Island Wetland Restoration Initiative Group and/or Ducks Unlimited may also contribute to the project or implement complementary projects. This synergy of projects will confer a greater ecological benefit to the natural resources and to the public in a highly cost-efficient manner.

Under the terms of the Consent Judgment entered into in 1992, the PPG also paid $50,000 to the Federal Trustees to compensate for ''past injury to, destruction of, or loss of, natural resources,'' for the said purpose of ''restoring, replacing or acquiring the equivalent of the affected natural resources' at an off-Site location. The Trustees now propose to use all or part of this $50,000 which was set aside for off-Site, compensatory restoration to supplement the budget for the preferred restoration alternative, the North Hempstead Bar Beach Lagoon Project.

The Trustees invite the public to comment on this Revised Draft RP/EA. All comments received on the Revised Draft RP/EA will be considered. The Trustees will respond to any comments received either through revision of this Revised Draft RP/EA, incorporation into the Final Restoration Plan, or by letter to the commentor once the comment period has ended. The Final Restoration Plan will then be published.

This notice does not contain a collection-of-information requirement subject to the Paperwork Reduction Act.

Authority: 42 U.S.C. 4321 *et seq.* and 42 U.S.C. 9601 *et seq.*

Dated: July 31, 2002.

Jamison S. Hawkins,

Deputy Assistant Administrator for Ocean Services and Coastal Zone Management.

[FR Doc. 02–19972 Filed 8–6–02; 8:45 am]

BILLING CODE 3510–JE–P

DEPARTMENT OF COMMERCE

National Oceanic and Atmospheric Administration

[I.D. 072602A]

Harbor Porpoise Bycatch Estimates for 2001

AGENCY: National Marine Fisheries Service (NMFS), National Oceanic and Atmospheric Administration (NOAA), Commerce.

ACTION: Notice of availability.

SUMMARY: NMFS announces the availability of harbor porpoise bycatch estimates for January through December, 2001.

ADDRESSES: Send information requests to Protected Resources Division, NMFS, One Blackburn Drive, Gloucester, MA 01930–2298 or to Marine Mammal Conservation Division, NMFS, Office of Protected Resources, 1315 East-West Highway, Silver Spring, MD 20910.

FOR FURTHER INFORMATION CONTACT: Kimberly Thounhurst, Northeast Region, phone: (978) 281–9138, e-mail: *Kimberly.Thounhurst@noaa.gov*.

SUPPLEMENTARY INFORMATION: In December of 1998, NMFS implemented a plan to reduce the incidental mortality and serious injury of the Gulf of Maine/Bay of Fundy (GOM/BOF) harbor porpoise stock in the Northeast sink gillnet fishery and Mid-Atlantic coastal gillnet fishery to below the Potential Biological Removal (PBR) level for that stock pursuant to the Marine Mammal Protection Act. The Harbor Porpoise Take Reduction Plan contains a combination of management measures including fishery closures and gear modifications. These measures are described in the December 2, 1998, final rule (63 FR 66464) and December 23, 1998, correction notice (63 FR 71041).

The most current estimate of incidental take of harbor porpoise for 2001 by fishery is available. This information is provided pursuant to a requirement of the May 12, 2000, Settlement Agreement in *Center for Marine Conservation et al.* v. *Daley et al.*(Civ. No. 1:98CV02029 EGS). The incidental take of GOM/BOF harbor porpoise in U.S. waters during 2001 is estimated to be 80 animals (Coefficient of Variation (CV)=0.71; 95–percent Confidence Interval (CI)=6–204). This estimate is comprised of 51 animals (64–percent; CV=0.97, 95–percent CI=2-166) extrapolated from takes observed during random sampling of the Northeast sink gillnet fishery, 26 animals (32–percent; CV=0.95, 95–percent CI=1-83) extrapolated from takes observed during random sampling of the Mid-Atlantic coastal gillnet fishery, and 3 animals (4–percent) represented in unextrapolated opportunistic data obtained from stranded animals displaying evidence of fishery interactions. An estimate of incidental take of GOM/BOF harbor porpoise in Canadian waters during 2001 is not available at this time.

For 2000, the estimated annual incidental take of harbor porpoise in U.S. waters was 529 animals (CV=0.36, 95–percent CI=267–1049). This estimate is comprised of 507 animals (CV=0.37, 95–percent CI=169–924) from the Northeast sink gillnet fishery, 21 animals (CV=0.76, 95–percent CI=1–53) from the Mid-Atlantic coastal gillnet fishery, and 1 animal from an unknown Mid-Atlantic fishery.

For 1999, the estimated annual incidental take of harbor porpoise in U.S. waters was 323 animals (CV=0.25, 95–percent CI=211–554), comprised of 270 animals (CV=-0.28, 95–percent CI=78–364) from the Northeast sink gillnet fishery and 53 animals (CV=0.49, 95-percent CI=3–98) from the Mid-Atlantic coastal gillnet fishery.

1999, 2000, and 2001 represent the years since implementation of the Harbor Porpoise Take Reduction Plan and fishery management measures intended to reduce harbor porpoise bycatch. From 1994 through 1998, the mean annual mortality of harbor porpoise was 1,521 animals (CV=0.10), comprised of 1163 animals (CV=0.11) from the Northeast sink gillnet fishery and 358 animals (CV=0.20) from the Mid-Atlantic coastal gillnet fishery.

Further detail on the 2001 GOM/BOF harbor porpoise bycatch analysis is available from NMFS (see **ADDRESSES** or **FOR FURTHER INFORMATION CONTACT**).

Dated: August 1, 2002.

Wanda L. Cain,

Acting Director, Office of Protected Resources, National Marine Fisheries Service.

[FR Doc. 02–19976 Filed 8–6–02; 8:45 am]

BILLING CODE 3510–22–S

COMMITTEE FOR THE IMPLEMENTATION OF TEXTILE AGREEMENTS

Adjustment of Import Limits for Certain Cotton and Man-Made Fiber Textile Products Produced or Manufactured in Bangladesh

July 31, 2002.

AGENCY: Committee for the Implementation of Textile Agreements (CITA).

ACTION: Issuing a directive to the Commissioner of Customs adjusting limits.

EFFECTIVE DATE: August 9, 2002.

FOR FURTHER INFORMATION CONTACT: Ross Arnold, International Trade Specialist, Office of Textiles and Apparel, U.S. Department of Commerce, (202) 482–4212. For information on the quota status of these limits, refer to the Quota Status Reports posted on the bulletin boards of each Customs port, call (202) 927–5850, or refer to the U.S. Customs Web site at *http://www.customs.gov*. For information on embargoes and quota re-openings, refer to the Office of Textiles and Apparel Web site at *http://otexa.ita.doc.gov*.

SUPPLEMENTARY INFORMATION:

Authority: Section 204 of the Agricultural Act of 1956, as amended (7 U.S.C. 1854); Executive Order 11651 of March 3, 1972, as amended.

The current limits for certain categories are being adjusted for swing, carryforward, and special shift.

A description of the textile and apparel categories in terms of HTS numbers is available in the CORRELATION: Textile and Apparel Categories with the Harmonized Tariff Schedule of the United States (see **Federal Register** notice 66 FR 65178, published on December 18, 2001). Also see 66 FR 59409, published on November 28, 2001.

D. Michael Hutchinson,

Acting Chairman, Committee for the Implementation of Textile Agreements.

Committee for the Implementation of Textile Agreements

July 31, 2002.

Commissioner of Customs,
Department of the Treasury, Washington, DC 20229.

Dear Commissioner: This directive amends, but does not cancel, the directive issued to you on November 21, 2001, by the Chairman, Committee for the Implementation of Textile Agreements. That directive concerns imports of certain cotton and man-made fiber textile products, produced or manufactured in Bangladesh and exported during the twelve-month period which began on January 1, 2002 and extends through December 31, 2002.

Effective on August 9, 2002, you are directed to adjust the limits for the following categories, as provided for under the Uruguay Round Agreement on Textiles and Clothing:

Category	Adjusted twelve-month limit [1]
237	460,537 dozen.
338/339	2,473,117 dozen.
638/639	2,474,517 dozen.
641	1,208,418 dozen.
647/648	2,704,167 dozen.

[1] The limits have not been adjusted to account for any imports exported after December 31, 2001.

The Committee for the Implementation of Textile Agreements has determined that these actions fall within the foreign affairs exception of the rulemaking provisions of 5 U.S.C. 553(a)(1).

Sincerely,
D. Michael Hutchinson,
Acting Chairman, Committee for the Implementation of Textile Agreements.

[FR Doc.02–19893 Filed 8–6–02; 8:45 am]

BILLING CODE 3510–DR–S

COMMITTEE FOR THE IMPLEMENTATION OF TEXTILE AGREEMENTS

Adjustment of Import Limits for Certain Cotton and Man-Made Fiber Textile Products Produced or Manufactured in Oman

August 1, 2002.

AGENCY: Committee for the Implementation of Textile Agreements (CITA).

ACTION: Issuing a directive to the Commissioner of Customs adjusting limits.

EFFECTIVE DATE: August 7, 2002.

FOR FURTHER INFORMATION CONTACT: Roy Unger, International Trade Specialist, Office of Textiles and Apparel, U.S. Department of Commerce, (202) 482–4212. For information on the quota status of these limits, refer to the Quota Status Reports posted on the bulletin boards of each Customs port, call (202) 927–5850, or refer to the U.S. Customs Web site at *http://www.customs.gov*. For information on embargoes and quota re-openings, refer to the Office of Textiles and Apparel Web site at *http://otexa.ita.doc.gov*.

SUPPLEMENTARY INFORMATION:

Authority: Section 204 of the Agricultural Act of 1956, as amended (7 U.S.C. 1854); Executive Order 11651 of March 3, 1972, as amended.

The current limits for certain categories are being adjusted for swing and special shift.

A description of the textile and apparel categories in terms of HTS numbers is available in the CORRELATION: Textile and Apparel Categories with the Harmonized Tariff Schedule of the United States (see **Federal Register** notice 66 FR 65178, published on December 18, 2001). Also see 66 FR 59581, published on November 29, 2001.

James C. Leonard III,

Chairman, Committee for the Implementation of Textile Agreements.

Committee for the Implementation of Textile Agreements

August 1, 2002.

Commissioner of Customs,
Department of the Treasury, Washington, DC 20229.

Dear Commissioner: This directive amends, but does not cancel, the directive issued to you on November 23, 2001, by the Chairman, Committee for the Implementation of Textile Agreements. That directive concerns imports of certain cotton and man-made fiber textile products, produced or manufactured in Oman and exported during the twelve-month period beginning on January 1, 2002 and extending through December 31, 2002.

Effective on August 7, 2002, you are directed to adjust the current limits for the following categories, as provided for under the Uruguay Round Agreement on Textiles and Clothing:

Category	Adjusted twelve-month limit [1]
334/634	183,783 dozen.
335/635	335,513 dozen.
338/339	819,929 dozen.
347/348	1,400,674 dozen.
647/648	405,790 dozen.

[1] The limits have not been adjusted to account for any imports exported after December 31, 2001.

The Committee for the Implementation of Textile Agreements has determined that these actions fall within the foreign affairs exception of the rulemaking provisions of 5 U.S.C. 553(a)(1).

Sincerely,
James C. Leonard III,
Chairman, Committee for the Implementation of Textile Agreements.

[FR Doc. 02–19894 Filed 8–6–02; 8:45 am]

BILLING CODE 3510–DR–S

DEPARTMENT OF DEFENSE

Office of the Secretary

Privacy Act of 1974; System of Records

AGENCY: Office of the Secretary, DOD.

ACTION: Notice to Amend two Systems of Records.

SUMMARY: The Office of the Secretary of Defense proposes to amend two systems of records notices in its inventory of record systems subject to the Privacy Act of 1974 (5 U.S.C. 552a), as amended.

DATES: The changes will be effective on September 6, 2002 unless comments are received that would result in a contrary determination.

ADDRESSES: Send comments to OSD Privacy Act Coordinator, Records Management Section, Washington Headquarters Services, 1155 Defense Pentagon, Washington, DC 20301–1155.

FOR FURTHER INFORMATION CONTACT: Mr. David Bosworth at (703) 601–4728.

SUPPLEMENTARY INFORMATION: The Office of the Secretary of Defense notices for systems of records subject to the Privacy Act of 1974 (5 U.S.C. 552a), as amended, have been published in the **Federal Register** and are available from the address above.

The specific changes to the records system being amended are set forth below followed by the notice, as amended, published in its entirety. The proposed amendments are not within the purview of subsection (r) of the Privacy Act of 1974, (5 U.S.C. 552a), as amended, which requires the submission of a new or altered system report.

Dated: August 1, 2002.

Patricia L. Toppings,

Alternate OSD Federal Register Liaison Officer, Department of Defense.

DPA DSR.A 06

SYSTEM NAME:

Security Review Index File (February 22, 1993, 58 FR 10227).

CHANGES

* * * * *

SYSTEM IDENTIFIER:

Delete entry and replace with 'DFOISR 06'.

* * * * *

SYSTEM LOCATION:

Delete entry and replace with 'Director, Freedom of Information and Security Review, Washington Headquarters Service, 1155 Defense Pentagon, Washington, DC 20301–1155.'

CATEGORIES OF INDIVIDUALS COVERED BY THE SYSTEM:

Delete entry and replace with 'Department of Defense officials who present statements, testify, or who furnish information to the Congress of the United States. Department of Defense officials and citizens or organizations outside the Defense Department who submit documents, such as but not limited to, speeches and articles, for clearance prior to public release.'

CATEGORIES OF RECORDS IN THE SYSTEM:

Delete entry and replace with 'Names, organizational affiliations, addresses, and other contact information of individuals submitting material for security review. The material submitted for review is also maintained with a database link to information about the submitting official and the action officer.'

AUTHORITY:

Delete entry and replace with '5 U.S.C. 301, Departmental Regulations.'

PURPOSE(S);

Delete entry and replace with 'To manage the security review process for documents or materials before they are released outside of the Department of Defense. The documents and materials of completed security reviews are maintained for historical reference to ensure subsequent reviews, which may be similar in content are handled consistently.'

* * * * *

STORAGE:

Delete entry and replace with 'Paper records in file folders and computer database.'

RETRIEVABILITY:

Delete entry and replace with 'Retrieved by submitting official or action officer's name and/or organization, Security Review Case Number, or subject of submitted material.'

SAFEGUARDS:

Delete entry and replace with 'Paper files are maintained in security containers with access only to officials in accordance with assigned duties. Computer databases are password protected and accessed by individuals who have a need to know.'

* * * * *

DFOISR 06

SYSTEM NAME:

Security Review Index File.

SYSTEM LOCATION:

Director, Freedom of Information and Security Review, Washington Headquarters Service, 1155 Defense Pentagon, Washington, DC 20301–1155.

CATEGORIES OF INDIVIDUALS COVERED BY THE SYSTEM:

Department of Defense officials who present statements, testify, or who furnish information to the Congress of the United States. Department of Defense officials and citizens or organizations outside the Defense Department who submit documents, such as but not limited to, speeches and articles, for clearance prior to public release.

CATEGORIES OF RECORDS IN THE SYSTEM:

Names, organizational affiliations, addresses, and other contact information of individuals submitting material for security review. The material submitted for review is also maintained with a database link to information about the submitting official and the action officer.

AUTHORITY FOR MAINTENANCE OF THE SYSTEM:

5 U.S.C. 301, Departmental Regulations.

PURPOSE(S):

To manage the security review process for documents or materials before they are released outside of the Department of Defense. The documents and materials of completed security reviews are maintained for historical reference to ensure subsequent reviews, which may be similar in content, are handled consistently.

ROUTINE USES OF RECORDS MAINTAINED IN THE SYSTEM, INCLUDING CATEGORIES OF USERS AND THE PURPOSES OF SUCH USES:

In addition to those disclosures generally permitted under 5 U.S.C. 552a(b) of the Privacy Act, these records or information contained therein may specifically be disclosed outside the DoD as a routine use pursuant to 5 U.S.C. 552a(b)(3) as follows:

The DoD 'Blanket Routine Uses' set forth at the beginning of OSD's compilation of systems of records notices apply to this system.

POLICIES AND PRACTICES FOR STORING, RETRIEVING, ACCESSING, RETAINING, AND DISPOSING OF RECORDS IN THE SYSTEM:

STORAGE:

Paper records in file folders and computer database.

RETRIEVABILITY:

Retrieved by submitting official or action officer's name and/or organization, Security Review Case Number, or subject of submitted material.

SAFEGUARDS:

Paper files are maintained in security containers with access only to officials in accordance with assigned duties. Computer databases are password protected and accessed by individuals who have a need to know.

RETENTION AND DISPOSAL:

Security review initial files are destroyed 2 years after clearance without amendment and 6 years after record was cleared with amendment or denied clearance. Security review appeal files which are cleared are destroyed 2 years after clearance and 6 years after record was cleared with amendment or denied.

SYSTEM MANAGER(S) AND ADDRESS:

Director, Freedom of Information and Security Review, Washington Headquarters Services, 1155 Defense Pentagon, Washington, DC 20301–1155.

NOTIFICATION PROCEDURE:

Individuals seeking to determine whether information about themselves is contained in this system of records should address written inquiries to the Director, Freedom of Information and Security Review, Washington Headquarters Services, 1155 Defense Pentagon, Washington, DC 20301–1155.

Written requests for information should include the full name and organizational affiliation of the individual.

RECORD ACCESS PROCEDURES:

Individuals seeking access to information about themselves contained in this system of records should address written inquiries to Director, Freedom of Information and Security Review, Washington Headquarters Services, 1155 Defense Pentagon, Washington, DC 20301–1155.

Written requests for information should include the full name and organizational affiliation of the individual.

For personal visits to examine records, the individual should provide identification such as a driver's license or other form of picture identification.

CONTESTING RECORD PROCEDURES:

The OSD rules for accessing records, for contesting contents and appealing initial agency determinations are published in OSD Administrative Instruction 81; 32 CFR part 311; or may be obtained from the system manager.

RECORD SOURCE CATEGORIES:

Submitted documents and materials with requests for security review from organizations and individuals and comments and recommendations returned by subject matter specialists.

EXEMPTIONS CLAIMED FOR THE SYSTEM:

None.

DPA DSR.B 11

SYSTEM NAME:

Mandatory Declassification Review Files (February 22, 1993, 58 FR 10227).

CHANGES:

* * * * *

SYSTEM IDENTIFIER:

Delete entry and replace with 'DFOISR 11'.

SYSTEM LOCATION:

Delete entry and replace with 'Director, Freedom of Information and Security Review, Washington Headquarters Service, 1155 Defense Pentagon, Washington, DC 20301–1155.'

CATEGORIES OF INDIVIDUALS COVERED BY THE SYSTEM:

Delete entry and replace with 'Individuals who request Mandatory Declassification Review (MDR) or appeal an MDR determination of any classified document for the purpose of releasing declassified material to the public, as provided for under the applicable Executive Order(s) governing classified National Security Information. Other individuals in the system are action officers.'

CATEGORIES OF RECORDS IN THE SYSTEM:

Delete entry and replace with 'Name and address of person making MDR request or appeal, identification of records requested, dates and summaries of action taken, and documentation for establishing and processing collectable fees.

Names, titles, and/or positions of security specialists and/or officials responsible for an initial or final denial on appeal of a request for declassification of a record.'

AUTHORITY FOR MAINTENANCE OF THE SYSTEM:

Delete entry and replace with 'E.O. 12958, Classified National Security Information, or other applicable Executive Order(s) governing classified National Security Information.'

PURPOSE(S):

Delete entry and replace with 'To manage requests and/or appeals from individuals for the mandatory review of classified documents for the purposes of releasing declassified material to the public; and to provide a research resource of historical data on release of records so as to facilitate conformity in subsequent actions.

Data developed from this system is used for the annual report required by the applicable Executive Order(s) governing classified National Security Information. This data also serves management needs, by providing information about the number of requests; the type or category of records requested; and the average processing time.'

* * * * *

SAFEGUARDS:

Delete second sentence and replace with 'Computer access is password protected and accessed by individuals who have a need to know.'

* * * * *

DFOISR 11

SYSTEM NAME:

Mandatory Declassification Review Files.

SYSTEM LOCATION:

Director, Freedom of Information and Security Review, Washington Headquarters Services, 1155 Defense Pentagon, Washington, DC 20301–1155.

CATEGORIES OF INDIVIDUALS COVERED BY THE SYSTEM:

Individuals who request Mandatory Declassification Review (MDR) or appeal an MDR determination of any classified document for the purpose of releasing declassified material to the public, as provided for under the applicable Executive Order(s) governing classified National Security Information. Other individuals in the system are action officers.

CATEGORIES OF RECORDS IN THE SYSTEM:

Name and address of person making MDR request or appeal, identification of records requested, dates and summaries of action taken, and documentation for establishing and processing collectable fees.

Names, titles, and/or positions of security specialists and/or officials responsible for an initial or final denial on appeal of a request for declassification of a record.

AUTHORITY FOR MAINTENANCE OF THE SYSTEM:

E.O. 12958, Classified National Security Information, or other applicable Executive Order(s) governing classified National Security Information.

PURPOSE(S):

To manage requests and/or appeals from individuals for the mandatory review of classified documents for the purposes of releasing declassified material to the public; and to provide a research resource of historical data on release of records so as to facilitate conformity in subsequent actions.

Data developed from this system is used for the annual report required by the applicable Executive Order(s)

governing classified National Security Information. This data also serves management needs, by providing information about the number of requests; the type or category of records requested; and the average processing time

ROUTINE USES OF RECORDS MAINTAINED IN THE SYSTEM, INCLUDING CATEGORIES OF USERS AND THE PURPOSES OF SUCH USES:

In addition to those disclosures generally permitted under 5 U.S.C. 552a(b) of the Privacy Act, these records or information contained therein may specifically be disclosed outside the DoD as a routine use pursuant to 5 U.S.C. 552a(b)(3) as follows:

The DoD 'Blanket Routine Uses' set forth at the beginning of OSD's compilation of systems of records notices apply to this system.

POLICIES AND PRACTICES FOR STORING, RETRIEVING, ACCESSING, RETAINING, AND DISPOSING OF RECORDS IN THE SYSTEM:

STORAGE:

Magnetic media storage, computer database, paper computer printouts, and paper records in file folders.

RETRIEVABILITY:

Retrieved by name of requester and other pertinent information, such as organization or address, subject material describing the MDR item (including date), MDR request number using computer indices, referring agency, or any combination of fields.

SAFEGUARDS:

Paper records are maintained in security containers with access limited to officials having a need-to-know based on their assigned duties. Computer systems require user passwords and users are limited according to their assigned duties to appropriate access on a need-to-know basis.

RETENTION AND DISPOSAL:

Files that grant access to records are held in current status for two years after the end of the calendar year in which created, then destroyed. Files pertaining to denials of requests are destroyed 5 years after final determination. Appeals are retained for 3 years after final determination.

SYSTEM MANAGER(S) AND ADDRESS:

Director, Freedom of Information and Security Review, Washington Headquarters Services, 1155 Defense Pentagon, Washington, DC 20301–1155.

NOTIFICATION PROCEDURE:

Individuals seeking to determine whether information about themselves is contained in this system of records should address written inquiries to the Director, Freedom of Information and Security Review, Washington Headquarters Services, 1155 Defense Pentagon, Washington, DC 20301–1155.

Written requests for information should include the full name and organizational affiliation of the individual at the time the record would have been created.

RECORD ACCESS PROCEDURES:

Individuals seeking access to information about themselves contained in this system should address written inquiries to the Director, Freedom of Information and Security Review, Washington Headquarters Services, 1155 Defense Pentagon, Washington, DC 20301–1155.

Written requests for information should include the full name and organizational affiliation of the individual at the time the record would have been created.

For personal visits to examine records, the individual should provide identification such as a driver's license or other form of picture identification.

CONTESTING RECORD PROCEDURES:

The OSD rules for accessing records, for contesting contents and appealing initial agency determinations are published in OSD Administrative Instruction 81; 32 CFR part 311; or may be obtained from the system manager.

RECORD SOURCE CATEGORIES:

Requests from individuals for Mandatory Declassification Review and subsequent release of records and information provided by form and memorandum by officials who hold the requested records, act upon the request, or who are involved in legal action stemming from the action taken.

EXEMPTIONS CLAIMED FOR THE SYSTEM:

None.

[FR Doc. 02–19865 Filed 8–6–02; 8:45 am]

BILLING CODE 5001–08–P

DEPARTMENT OF EDUCATION

Submission for OMB Review; Comment Request

AGENCY: Department of Education.

SUMMARY: The Leader, Regulatory Information Management Group, Office of the Chief Information Officer invites comments on the submission for OMB review as required by the Paperwork Reduction Act of 1995.

DATES: Interested persons are invited to submit comments on or before September 6, 2002.

ADDRESSES: Written comments should be addressed to the Office of Information and Regulatory Affairs, Attention: Lauren Wittenberg, Desk Officer, Department of Education, Office of Management and Budget, 725 17th Street, NW., Room 10235, New Executive Office Building, Washington, DC 20503 or should be electronically mailed to the internet address *Lauren Wittenberg@omb.eop.gov.*

SUPPLEMENTARY INFORMATION: Section 3506 of the Paperwork Reduction Act of 1995 (44 U.S.C. Chapter 35) requires that the Office of Management and Budget (OMB) provide interested Federal agencies and the public an early opportunity to comment on information collection requests. OMB may amend or waive the requirement for public consultation to the extent that public participation in the approval process would defeat the purpose of the information collection, violate State or Federal law, or substantially interfere with any agency's ability to perform its statutory obligations. The Leader, Regulatory Information Management Group, Office of the Chief Information Officer, publishes that notice containing proposed information collection requests prior to submission of these requests to OMB. Each proposed information collection, grouped by office, contains the following: (1) Type of review requested, e.g. new, revision, extension, existing or reinstatement; (2) Title; (3) Summary of the collection; (4) Description of the need for, and proposed use of, the information; (5) Respondents and frequency of collection; and (6) Reporting and/or Recordkeeping burden. OMB invites public comment.

Dated: August 1, 2002.

John D. Tressler,

Leader, Regulatory Information Management, Office of the Chief Information Officer.

Office of Elementary and Secondary Education

Type of Review: Reinstatement.

Title: Consolidated State Application/ Consolidated State Annual Report.

Frequency: Annually.

Affected Public: State, Local, or Tribal Gov't, SEAs or LEAs.

Reporting and Recordkeeping Hour Burden:

Responses: 52.

Burden Hours: 7,800.

Abstract: This information collection package describes the proposed criteria and procedures that govern the consolidated State application under which State educational agencies will apply to obtain funds for implementing Elementary and Secondary Education

Act (ESEA) programs. The option of submitting a consolidated application for obtaining federal formula program grant funds is provided for in the reauthorized ESEA (No Child Left Behind—NCLB) Sections 9301–9306. This information collection package will guide the States in identifying the information and data required in the application.

In addition to this comment period for the Consolidated State Application, the Department has published the Notice of Proposed Rulemaking (NPRM) for the Title 1—Improving the Academic Achievement of the Disadvantaged for public comment. The comment period for the information collection requirements pertaining to this collection has been offered through the NPRM.

Requests for copies of the submission for OMB review; comment request may be accessed from *http://edicsweb.ed.gov,* by selecting the ''Browse Pending Collections'' link and by clicking on link number 2123. When you access the information collection, click on ''Download Attachments '' to view. Written requests for information should be addressed to Vivian Reese, Department of Education, 400 Maryland Avenue, SW., Room 4050, Regional Office Building 3, Washington, DC 20202–4651 or to the e-mail address *vivan.reese@ed.gov.* Requests may also be electronically mailed to the internet address *OCIO_RIMG@ed.gov* or faxed to 202–708–9346. Please specify the complete title of the information collection when making your request.

Comments regarding burden and/or the collection activity requirements should be directed to Kathy Axt at her e-mail address *Kathy.Axt@ed.gov.* Individuals who use a telecommunications device for the deaf (TDD) may call the Federal Information Relay Service (FIRS) at 1–800–877–8339.

[FR Doc. 02–19978 Filed 8–6–02; 8:45 am]

BILLING CODE 4000–01–P

DEPARTMENT OF ENERGY

[Docket No. EA–220–A]

Application To Export Electric Energy, NRG Power Marketing Inc.

AGENCY: Office of Fossil Energy, DOE.

ACTION: Notice of application.

SUMMARY: NRG Power Marketing, Inc. (NRGPMI) has applied for authority to transmit electric energy from the United States to Canada pursuant to section 202(e) of the Federal Power Act.

DATES: Comments, protests or requests to intervene must be submitted on or before September 6, 2002.

ADDRESSES: Comments, protests or requests to intervene should be addressed as follows: Office of Coal & Power Import/Export (FE–27), Office of Fossil Energy, U.S. Department of Energy, 1000 Independence Avenue, SW., Washington, DC 20585–0350 (FAX 202–287–5736).

FOR FURTHER INFORMATION CONTACT: Rosalind Carter (Program Office) 202–586–7983 or Michael Skinker (Program Attorney) 202–586–2793.

SUPPLEMENTARY INFORMATION: Exports of electricity from the United States to a foreign country are regulated and require authorization under section 202(e) of the Federal Power Act (FPA) (16U.S.C. § 824a(e)).

On May 3, 2000, the Office of Fossil Energy (FE) of the Department of Energy (DOE) issued Order No. EA–220 authorizing NRGPMI to transmit electric energy from the United States to Canada as a power marketer using the international electric transmission facilities owned and operated by Basin Electric Power Cooperative, Bonneville Power Administration, Citizen Utilities, Eastern Maine Electric Cooperative, International Transmission Company (formally The Detroit Edison Company), Joint Owners of the Highgate Project, Long Sault, Inc., Maine Electric Power Company, Maine Public Service Company, Minnesota Power Inc., Minnkota Power Cooperative, New York Power Authority, Niagara Mohawk Power Corporation, Northern States Power, and Vermont Electric Transmission Company. That two-year authorization expired on May 3, 2002.

On July 10, 2002, DOE received an application from NRGPMI to renew its authorization to transmit electric energy from the United States to Canada.

Procedural Matters

Any person desiring to become a party to this proceeding or to be heard by filing comments or protests to this application should file a petition to intervene, comment or protest at the address provided above in accordance with §§ 385.211 or 385.214 of the Federal Energy Regulatory Commission's Rules of Practice and Procedures (18 CFR 385.211, 385.214). Fifteen copies of each petition and protest should be filed with DOE on or before the date listed above.

Comments on the NRGPMI application to export electric energy to Canada should be clearly marked with Docket EA–220–A. Additional copies are to be filed directly with NRG Power Marketing Inc., 901 Marquette Ave, Suite 2300, Minneapolis, MN 55402–3265, ATTN: Contract Administration and General Counsel.

DOE notes that the circumstances described in this application are virtually identical to those for which export authority had previously been granted in FE Order No. EA–220. Consequently, DOE believes that it has adequately satisfied its responsibilities under the National Environmental Policy Act of 1969 through the documentation of a categorical exclusion in the FE Docket EA–220 proceeding.

Copies of this application will be made available, upon request, for public inspection and copying at the address provided above or by accessing the FE Home Page at *http://www.fe.de.gov.* Upon reaching the FE Home page, select ''Electricity Regulation'' and then ''Pending Proceedings'' from the options menus.

Issued in Washington, DC on July 31, 2002.

Anthony J. Como,

Deputy Director, Electric Power Regulation, Office of Coal & Power Import/Export, Office of Coal & Power Systems, Office of Fossil Energy.

[FR Doc. 02–19911 Filed 8–6–02; 8:45 am]

BILLING CODE 6450–01–P

DEPARTMENT OF ENERGY

Environmental Management Site-Specific Advisory Board, Hanford

AGENCY: Department of Energy.

ACTION: Notice of open meeting.

SUMMARY: This notice announces a meeting of the Environmental Management Site-Specific Advisory Board (EM SSAB), Hanford. The Federal Advisory Committee Act (Pub. L. 92–463, 86 Stat. 770) requires that public notice of these meeting be announced in the **Federal Register**.

DATES: Thursday, September 5, 2002, 9 a.m.–5 p.m. Friday, September 6, 2002, 8:30 a.m.–4 p.m.

ADDRESSES: Radisson Hotel Seattle Airport, 17001 Pacific Highway South, Seattle, WA (206) 244–6600.

FOR FURTHER INFORMATION CONTACT: Gail McClure, Public Involvement Program Manager, Department of Energy Richland Operations Office, PO Box 550 (A7–75), Richland, WA, 99352; Phone: (509) 373–5647; Fax: (509) 376–1563.

SUPPLEMENTARY INFORMATION: *Purpose of the Board:* The purpose of the Board is to make recommendations to DOE and its regulators in the areas of environmental restoration, waste management, and related activities.

Tentative Agenda: Thursday, September 5, 2002.

- Perspectives from Tri-Party Agreement (TPA) Senior Managers
- Performance Management Plan for the Accelerated Cleanup of the Hanford Site
- Hanford Advisory Board Work Plan Priorities for FY 2003
- Hanford Exposure Scenarios Task Force Workshop Draft Advice on the 100 and 300 areas
- Potential Draft Advice on FY 03 and FY 04 Budget
- Potential Draft Advice on Tank Waste Project

Friday, September 6, 2002

- Update on the Draft Hanford Solid (Radioactive and Hazardous) Waste Environmental Impact Statement (EIS) Public Meetings
- Agency Response to Hanford Advisory Board Advice
- Fast Flux Test Facility (FFTF) Tri-Party Agreement (TPA) Draft Change Package
- Lesson Learned from the Committee of the Whole and Task Force Meetings
- Committee Updates

Public Participation: The meeting is open to the public. Written statements may be filed with the Board either before or after the meeting. Individuals who wish to make oral statements pertaining to agenda items should contact Gail McClure's office at the address or telephone number listed above. Requests must be received five days prior to the meeting and reasonable provision will be made to include the presentation in the agenda. The Deputy Designated Federal Officer is empowered to conduct the meeting in a fashion that will facilitate the orderly conduct of business. Each individual wishing to make public comment will be provided equal time to present their comments.

Minutes: The minutes of this meeting will be available for public review and copying at the Freedom of Information Public Reading Room, 1E–190, Forrestal Building, 1000 Independence Avenue, SW., Washington, DC 20585 between 9 a.m. and 4 p.m., Monday-Friday, except Federal holidays. Minutes will also be available by writing to Gail McClure, Department of Energy Richland Operation Office, PO Box 550, Richland, WA 99352, or by calling her at (509) 373–5647.

Issued at Washington, DC, on August 2, 2002.

Rachel M. Samuel,

Deputy Advisory Committee Management Officer.

[FR Doc. 02–19912 Filed 8–6–02; 8:45 am]

BILLING CODE 6450–01–P

DEPARTMENT OF ENERGY

Federal Energy Regulatory Commission

[Docket Nos. RP00–480–001, RP00–445–002, and RP01–9–001]

Alliance Pipeline L.P.; Notice of Compliance Filing

August 1, 2002.

Take notice that on July 3, 2002, Alliance Pipeline L.P. (Alliance) tendered for filing as part of its FERC Gas Tariff, Original Volume No. 1, the revised tariff sheets attached to Appendix A to the filing, with an effective date of August 2, 2002.

Alliance states that the purpose of this tariff filing is to comply with the Commission's Order issued June 5, 2002, on the compliance by Alliance with Commission Order Nos. 637, 587–G and 587–L.

Any person desiring to protest said filing should file a protest with the Federal Energy Regulatory Commission, 888 First Street, NE., Washington, DC 20426, in accordance with Section 385.211 of the Commission's Rules and Regulations. All such protests must be filed on or before August 8, 2002. Protests will be considered by the Commission in determining the appropriate action to be taken, but will not serve to make protestants parties to the proceedings. Copies of this filing are on file with the Commission and are available for public inspection. This filing may also be viewed on the web at *http://www.ferc.gov* using the ''RIMS'' link, select ''Docket#'' and follow the instructions (call 202–208–2222 for assistance). Comments, protests and interventions may be filed electronically via the Internet in lieu of paper. The Commission strongly encourages electronic filings. *See*, 18 CFR 385.2001(a)(1)(iii) and the instructions on the Commission's web site under the ''e-Filing'' link.

Linwood A. Watson, Jr.,

Deputy Secretary.

[FR Doc. 02–19933 Filed 8–6–02; 8:45 am]

BILLING CODE 6717–01–P

DEPARTMENT OF ENERGY

Federal Energy Regulatory Commission

[Docket No. RP02–395–000]

ANR Storage Company; Notice of Tariff Filing

August 1, 2002.

Take notice that on July 26, 2002, ANR Storage Company (ANR Storage), tendered for filing as part of its FERC Gas Tariff, Original Volume No. 1, the following tariff sheets, with an effective date of August 25, 2002:

Fourth Revised Sheet No. 19
Second Revised Sheet No. 20A
Second Revised Sheet No. 25
Second Revised Sheet No. 26
First Revised Sheet No. 27
First Revised Sheet No. 28
First Revised Sheet No. 52 First Revised Sheet No. 54
Second Revised Sheet No. 126A
First Revised Sheet No. 127
Second Revised Sheet No. 128
First Revised Sheet No. 131
First Revised Sheet No. 156
Second Revised Sheet No. 157

ANR Storage states that the tariff sheets are being filed to make various minor clean-up related changes to its tariff including a change in the contact information due to the merger of The Coastal Corporation, ANR Storage's previous parent and El Paso Corporation. Also, a change is being made to the FS Rate Schedule so that it reflects actual current practices. Finally, ANR Storage is adding a provision that allows it to waive the requirement of providing earnest money for creditworthy companies.

Any person desiring to be heard or to protest said filing should file a motion to intervene or a protest with the Federal Energy Regulatory Commission, 888 First Street, NE., Washington, DC 20426, in accordance with Sections 385.214 or 385.211 of the Commission's Rules and Regulations. All such motions or protests must be filed in accordance with Section 154.210 of the Commission's Regulations. Protests will be considered by the Commission in determining the appropriate action to be taken, but will not serve to make protestants parties to the proceedings. Any person wishing to become a party must file a motion to intervene. Copies of this filing are on file with the Commission and are available for public inspection. This filing may also be viewed on the web at *http://www.ferc.gov* using the ''RIMS'' link, select ''Docket#'' and follow the instructions (call 202–208–2222 for assistance). Comments, protests and interventions may be filed electronically via the Internet in lieu of paper. The Commission strongly encourages electronic filings. *See*, 18 CFR 385.2001(a)(1)(iii) and the instructions on the Commission's web site under the ''e-Filing'' link.

Linwood A. Watson, Jr.,

Deputy Secretary.

[FR Doc. 02–19936 Filed 8–6–02; 8:45 am]

BILLING CODE 6717–01–P

DEPARTMENT OF ENERGY

Federal Energy Regulatory Commission

[Docket No. RP96–389–061]

Columbia Gulf Transmission Company; Notice of Negotiated Rate Filing

August 1, 2002.

Take notice that on July 23, 2002, Columbia Gulf Transmission Company (Columbia Gulf) tendered for filing the following contract for disclosure of a negotiated rate transaction: FTS–1 Service Agreement No. 73132 between Columbia Gulf Transmission Company and Reliant Energy Services, Inc. dated July 1, 2002.

Transportation service is to commence July 1, 2002 under the agreement.

Columbia Gulf states that it has served copies of the filing on all parties identified on the official service list in Docket No. RP96–389.

Any person desiring to be heard or to protest said filing should file a motion to intervene or a protest with the Federal Energy Regulatory Commission, 888 First Street, NE., Washington, DC 20426, in accordance with Sections 385.214 or 385.211 of the Commission's Rules and Regulations. All such motions or protests must be filed in accordance with Section 154.210 of the Commission's Regulations. Protests will be considered by the Commission in determining the appropriate action to be taken, but will not serve to make protestants parties to the proceedings. Any person wishing to become a party must file a motion to intervene. Copies of this filing are on file with the Commission and are available for public inspection. This filing may also be viewed on the web at *http://www.ferc.gov* using the ''RIMS'' link, select ''Docket#'' and follow the instructions (call 202–208–2222 for assistance). Comments, protests and interventions may be filed electronically via the Internet in lieu of paper. The Commission strongly encourages electronic filings. *See* 18 CFR 385.2001(a)(1)(iii) and the instructions on the Commission's web site under the ''e-Filing'' link.

Linwood A. Watson, Jr.,

Deputy Secretary.

[FR Doc. 02–19928 Filed 8–6–02; 8:45 am]

BILLING CODE 6717–01–P

DEPARTMENT OF ENERGY

Federal Energy Regulatory Commission

[Docket Nos. RP00–462–002 and RP01–37–004]

Equitrans, L.P.; Notice of Compliance

August 1, 2002.

Take notice that on July 22, 2002, Equitrans, L.P. (Equitrans) tendered for filing as part of its FERC Gas Tariff, Original Volume No. 1, the following revised tariff sheets to become effective on the date designated by the Commission upon acceptance of the tariff sheets:

First Revised Sheet No. 201
First Revised Sheet No. 217
First Revised Sheet No. 227
Second Revised Sheet No. 245
First Revised Sheet No. 246
First Revised Sheet No. 249
Second Revised Sheet No. 253
Second Revised Sheet No. 254
Second Revised Sheet No. 267
First Revised Sheet No. 268
First Revised Sheet No. 269
Second Revised Sheet No. 270
First Revised Sheet No. 271
Second Revised Sheet No. 276
Original Sheet No. 276A
Original Sheet No. 276B
Original Sheet No. 276C
Original Sheet No. 276D
Second Revised Sheet No. 286
Second Revised Sheet No. 306

Equitrans states that the purpose of this tariff filing is to comply with the Commission's Order issued May 21, 2002, on the compliance by Equitrans with Commission Order Nos. 637, 58–G and 587–L.

Any person desiring to protest said filing should file a protest with the Federal Energy Regulatory Commission, 888 First Street, NE., Washington, DC 20426, in accordance with Section 385.211 of the Commission's Rules and Regulations. All such protests must be filed on or before August 8, 2002. Protests will be considered by the Commission in determining the appropriate action to be taken, but will not serve to make protestants parties to the proceedings. Copies of this filing are on file with the Commission and are available for public inspection. This filing may also be viewed on the web at *http://www.ferc.gov* using the ''RIMS'' link, select ''Docket#'' and follow the instructions (call 202–208–2222 for assistance). Comments, protests and interventions may be filed electronically via the Internet in lieu of paper. The Commission strongly encourages electronic filings. *See*, 18 CFR 385.2001(a)(1)(iii) and the instructions on the Commission's web site under the ''e-Filing'' link.

Linwood A. Watson, Jr.,

Deputy Secretary.

[FR Doc. 02–19932 Filed 8–6–02; 8:45 am]

BILLING CODE 6717–01–P

DEPARTMENT OF ENERGY

[Docket No. RP02–396–000]

Federal Energy Regulatory Commission Great Lakes Gas Transmission Limited Partnership; Notice of Proposed Changes in FERC Gas Tariff

August 1, 2002.

Take notice that on July 29, 2002, Great Lakes Gas Transmission Limited Partnership (Great Lakes) tendered for filing as part of its FERC Gas Tariff Second Revised Volume No. 1 the following tariff sheets, proposed to be effective October 1, 2002:

Eleventh Revised Sheet No. 1
Seventh Revised Sheet No. 10A
Fifth Revised Sheet No. 11
Fourth Revised Sheet No. 39
Eighth Revised Sheet No. 41
Sixth Revised Sheet No. 42
Sixth Revised Sheet No. 42A
Eighth Revised Sheet No. 50C
Second Revised Sheet No. 50N

Great Lakes states that these tariff sheets are being filed to comply with the Commission's Order No. 587–O issued on May 1, 2002, in Docket No. RM96–1–020, 99 FERC 61,146 (2002). In Order No. 587–O, the Commission adopted Version 1.5 of the standards promulgated by the Wholesale Gas Quadrant of the North American Energy Standards Board, formerly the Gas Industry Standards Board (GISB), to be effective October 1, 2002.

Any person desiring to be heard or to protest said filing should file a motion to intervene or a protest with the Federal Energy Regulatory Commission, 888 First Street, NE., Washington, DC 20426, in accordance with Sections 385.214 or 385.211 of the Commission's Rules and Regulations. All such motions or protests must be filed in accordance with Section 154.210 of the Commission's Regulations. Protests will be considered by the Commission in determining the appropriate action to be taken, but will not serve to make protestants parties to the proceedings. Any person wishing to become a party must file a motion to intervene. Copies of this filing are on file with the Commission and are available for public inspection. This filing may also be viewed on the web at *http://www.ferc.gov* using the ''RIMS'' link,

select ''Docket#'' and follow the instructions (call 202–208–2222 for assistance). Comments, protests and interventions may be filed electronically via the Internet in lieu of paper. The Commission strongly encourages electronic filings. *See*, 18 CFR 385.2001(a)(1)(iii) and the instructions on the Commission's web site under the ''e-Filing'' link.

Linwood A. Watson, Jr.,

Deputy Secretary.

[FR Doc. 02–19937 Filed 8–6–02; 8:45 am]

BILLING CODE 6717–01–P

DEPARTMENT OF ENERGY

Federal Energy Regulatory Commission

[Project Nos. 2364–013, 2365–024]

Madison Paper Industries, Maine; Notice of Docket Assignments

August 1, 2002.

Take notice that the applications for new licenses for the Abenaki and Anson Projects, located on the Kennebec River in Somerset County, Maine, have been assigned docket nos. P–2364–013 and P–2365–024, respectively. Filings under docket nos. 2364–012 and 2365–023, assigned to a Settlement Agreement for the Abenaki and Anson Projects, need not be refiled.

Linwood A. Watson, Jr.,

Deputy Secretary.

[FR Doc. 02–19920 Filed 8–6–02; 8:45 am]

BILLING CODE 6717–01–P

DEPARTMENT OF ENERGY

Federal Energy Regulatory Commission

[Docket No. RP97–29–005]

Panhandle Eastern Pipe Line Company; Notice of Compliance Filing

August 1, 2002.

Take notice that on July 24, 2002, Panhandle Eastern Pipe Line Company (Panhandle) tendered for filing as part of its FERC Gas Tariff, First Revised Volume No. 1, the following revised tariff sheet to become effective August 24, 2002:

Second Revised Sheet No. 273A.

Panhandle states that this filing is being made to comply with the Commission's Letter Order dated July 9, 2002 in Docket No. RP97–29–004 which requires Panhandle to provide a time frame for responding to customers' requests for interconnection.

Panhandle states that copies of this filing are being served on all jurisdictional customers, interested state regulatory agencies and parties to this proceeding.

Any person desiring to protest said filing should file a protest with the Federal Energy Regulatory Commission, 888 First Street, NE., Washington, DC 20426, in accordance with Section 385.211 of the Commission's Rules and Regulations. All such protests must be filed in accordance with Section 154.210 of the Commission's Regulations. Protests will be considered by the Commission in determining the appropriate action to be taken, but will not serve to make protestants parties to the proceedings. Copies of this filing are on file with the Commission and are available for public inspection. This filing may also be viewed on the web at *http://www.ferc.gov* using the ''RIMS'' link, select ''Docket#'' and follow the instructions (call 202–208–2222 for assistance). Comments, protests and interventions may be filed electronically via the Internet in lieu of paper. The Commission strongly encourages electronic filings. *See* 18 CFR 385.2001(a)(1)(iii) and the instructions on the Commission's web site under the ''e-Filing'' link.

Linwood A. Watson, Jr.,

Deputy Secretary.

[FR Doc. 02–19929 Filed 8–6–02; 8:45 am]

BILLING CODE 6717–01–P

DEPARTMENT OF ENERGY

Federal Energy Regulatory Commission

[Docket Nos. RP00–414–001, and RP01–15–002]

PG&E Gas Transmission, Northwest Corporation; Notice of Compliance

August 1, 2002.

Take notice that on July 29, 2002, PG&E Gas Transmission, Northwest Corporation (GTN) tendered for filing as part of its FERC Gas Tariff, Second Revised Volume No. 1, the tariff sheets listed on Appendix A to the filing, with an effective date of August 29, 2002.

GTN states that the tariff sheets are being filed to comply with the Commission's March 29, 2002 Order on Compliance with Order Nos. 637, 587–G and 587–L (''Compliance Order''), and requested that the Commission extend the date for GTN to comply with certain aspects of Order No. 637 until the first quarter of 2003.

GTN states that a copy of this filing has been served upon its customers and interested state regulatory commissions.

Any person desiring to protest said filing should file a protest with the Federal Energy Regulatory Commission, 888 First Street, NE., Washington, DC 20426, in accordance with Section 385.211 of the Commission's Rules and Regulations. All such protests must be filed on or before August 8, 2002. Protests will be considered by the Commission in determining the appropriate action to be taken, but will not serve to make protestants parties to the proceedings. Copies of this filing are on file with the Commission and are available for public inspection. This filing may also be viewed on the web at *http://www.ferc.gov* using the ''RIMS'' link, select ''Docket#'' and follow the instructions (call 202–208–2222 for assistance). Comments, protests and interventions may be filed electronically via the Internet in lieu of paper. The Commission strongly encourages electronic filings. *See*, 18 CFR 385.2001(a)(1)(iii) and the instructions on the Commission's web site under the ''e-Filing'' link.

Linwood A. Watson, Jr.,

Deputy Secretary.

[FR Doc. 02–19931 Filed 8–6–02; 8:45 am]

BILLING CODE 6717–01–P

DEPARTMENT OF ENERGY

Federal Energy Regulatory Commission

[Docket No. RP02–362–001]

PG&E Gas Transmission, Northwest Corporation; Notice of Compliance Filing

August 1, 2002.

Take notice that on July 24, 2002, PG&E Gas Transmission, Northwest Corporation (GTN) tendered for filing to be part of its FERC Gas Tariff, Second Revised Volume No. 1–A, First Revised Sheet No. 127, First Revised Sheet No. 128 and First Revised Sheet No. 129, with an effective date of August 23, 2002.

GTN states that these tariff sheets are being submitted to comply with the Commission's July 5, 2002 Order in this docket, which directed GTN to revise its tariff to make clear that GTN will not enter into a pre-arranged deal during the bidding process in an open season and to better explain how GTN will be entering into pre-arranged deals.

GTN further states that a copy of this filing has been served on GTN's

jurisdictional customers and interested state regulatory agencies.

Any person desiring to protest said filing should file a protest with the Federal Energy Regulatory Commission, 888 First Street, NE., Washington, DC 20426, in accordance with Section 385.211 of the Commission's Rules and Regulations. All such protests must be filed in accordance with Section 154.210 of the Commission's Regulations. Protests will be considered by the Commission in determining the appropriate action to be taken, but will not serve to make protestants parties to the proceedings. Copies of this filing are on file with the Commission and are available for public inspection. This filing may also be viewed on the web at *http://www.ferc.gov* using the ''RIMS'' link, select ''Docket#'' and follow the instructions (call 202–208–2222 for assistance). Comments, protests and interventions may be filed electronically via the Internet in lieu of paper. The Commission strongly encourages electronic filings. *See*, 18 CFR 385.2001(a)(1)(iii) and the instructions on the Commission's web site under the ''e-Filing'' link.

Linwood A. Watson, Jr.,

Deputy Secretary.

[FR Doc. 02–19935 Filed 8–6–02; 8:45 am]

BILLING CODE 6717–01–P

DEPARTMENT OF ENERGY

Federal Energy Regulatory Commission

[Docket No. RP96–312–082]

Tennessee Gas Pipeline Company; Notice of Negotiated Rate Tariff Filing

August 1, 2002.

Take notice that on July 25, 2002, Tennessee Gas Pipeline Company (Tennessee), tendered for filing its Negotiated Rate Tariff Filing.

Tennessee's filing requests that the Commission approve a negotiated rate arrangement between Tennessee and Cincinnati Gas & Electric Company. Tennessee requests that the Commission grant such approval effective August 1, 2002.

Any person desiring to be heard or to protest said filing should file a motion to intervene or a protest with the Federal Energy Regulatory Commission, 888 First Street, NE., Washington, DC 20426, in accordance with Sections 385.214 or 385.211 of the Commission's Rules and Regulations. All such motions or protests must be filed in accordance with Section 154.210 of the Commission's Regulations. Protests will be considered by the Commission in determining the appropriate action to be taken, but will not serve to make protestants parties to the proceedings. Any person wishing to become a party must file a motion to intervene. Copies of this filing are on file with the Commission and are available for public inspection. This filing may also be viewed on the web at *http://www.ferc.gov* using the ''RIMS'' link, select ''Docket#'' and follow the instructions (call 202–208–2222 for assistance). Comments, protests and interventions may be filed electronically via the Internet in lieu of paper. The Commission strongly encourages electronic filings. *See*, 18 CFR 385.2001(a)(1)(iii) and the instructions on the Commission's web site under the ''e-Filing'' link.

Linwood A. Watson, Jr.,

Deputy Secretary.

[FR Doc. 02–19925 Filed 8–6–02; 8:45 am]

BILLING CODE 6717–01–P

DEPARTMENT OF ENERGY

Federal Energy Regulatory Commission

[Docket No. RP96–312–083]

Tennessee Gas Pipeline Company; Notice of Negotiated Rate Tariff Filing

August 1, 2002.

Take notice that on July 25, 2002, Tennessee Gas Pipeline Company (Tennessee), tendered for filing its Negotiated Rate Tariff Filing.

Tennessee's filing requests that the Commission approve a negotiated rate arrangement between Tennessee and Union Light, Heat & Power Company. Tennessee requests that the Commission grant such approval effective August 1, 2002.

Any person desiring to be heard or to protest said filing should file a motion to intervene or a protest with the Federal Energy Regulatory Commission, 888 First Street, NE., Washington, DC 20426, in accordance with Sections 385.214 or 385.211 of the Commission's Rules and Regulations. All such motions or protests must be filed in accordance with Section 154.210 of the Commission's Regulations. Protests will be considered by the Commission in determining the appropriate action to be taken, but will not serve to make protestants parties to the proceedings. Any person wishing to become a party must file a motion to intervene. Copies of this filing are on file with the Commission and are available for public inspection. This filing may also be viewed on the web at *http://www.ferc.gov* using the ''RIMS'' link, select ''Docket#'' and follow the instructions (call 202–208–2222 for assistance). Comments, protests and interventions may be filed electronically via the Internet in lieu of paper. The Commission strongly encourages electronic filings. *See*, 18 CFR 385.2001(a)(1)(iii) and the instructions on the Commission's web site under the ''e-Filing'' link.

Linwood A. Watson, Jr.,

Deputy Secretary.

[FR Doc. 02–19926 Filed 8–6–02; 8:45 am]

BILLING CODE 6717–01–P

DEPARTMENT OF ENERGY

Federal Energy Regulatory Commission

[Docket No. RP96–312–084]

Tennessee Gas Pipeline Company; Notice of Negotiated Rate Tariff Filing

August 1, 2002.

Take notice that on July 25, 2002, Tennessee Gas Pipeline Company (Tennessee), tendered for filing its Negotiated Rate Tariff Filing.

Tennessee's filing requests that the Commission approve a negotiated rate arrangement between Tennessee and Rhode Island State Energy Partners. The filing also requests the Commission to determine that the FT–A agreement related to the negotiated rate arrangement does not constitute a non-conforming agreement. Tennessee requests that the Commission grant such approval effective September 1, 2002.

Any person desiring to be heard or to protest said filing should file a motion to intervene or a protest with the Federal Energy Regulatory Commission, 888 First Street, NE., Washington, DC 20426, in accordance with Sections 385.214 or 385.211 of the Commission's Rules and Regulations. All such motions or protests must be filed in accordance with Section 154.210 of the Commission's Regulations. Protests will be considered by the Commission in determining the appropriate action to be taken, but will not serve to make protestants parties to the proceedings. Any person wishing to become a party must file a motion to intervene. Copies of this filing are on file with the Commission and are available for public inspection. This filing may also be viewed on the web at *http://www.ferc.gov* using the ''RIMS'' link, select ''Docket#'' and follow the instructions (call 202–208–2222 for assistance). Comments, protests and

interventions may be filed electronically via the Internet in lieu of paper. The Commission strongly encourages electronic filings. *See*, 18 CFR 385.2001(a)(1)(iii) and the instructions on the Commission's web site under the ''e-Filing'' link.

Linwood A. Watson, Jr.,

Deputy Secretary.

[FR Doc. 02–19927 Filed 8–6–02; 8:45 am]

BILLING CODE 6717–01–P

DEPARTMENT OF ENERGY

Federal Energy Regulatory Commission

[Docket No. RP00–260–011]

Texas Gas Transmission Corporation; Notice of Proposed Changes in FERC Gas Tariff

August 1, 2002.

Take notice that on July 29, 2002, Texas Gas Transmission Corporation (Texas Gas) tendered for filing as part of its FERC Gas Tariff, First Revised Volume No. 1, the tariff sheets listed on Appendix A to the filing, to become effective on the dates set forth on the respective tariff sheets in accordance with Article II and Article XIII of the Stipulation and Agreement of Settlement (Settlement).

Texas Gas states that this filing is being submitted in accordance with the Settlement filed on August 14, 2001 by Texas Gas. On March 4, 2002, the Commission issued an ''Order Accepting Offer of Settlement and Severing Parties'' which accepted the August 2001 Settlement as to the consenting parties and severed the Indicated Shippers for further proceedings before the Administrative Law Judge. Pursuant to Section 1 of Article II of the Settlement, Texas Gas shall file tariff sheets to implement the Settlement within twenty days after the date it becomes effective. Such tariff sheets shall place the ''retroactive settlement base rates'' into effect commencing November 1, 2000, and continuing until the ''prospective settlement base rates'' go into effect ''* * * on the first day of the next calendar month after the date on which this Stipulation becomes effective * * *''. The prospective rates contained herein are effective on August 1, 2002. By this filing, Texas Gas seeks to implement the provisions of the Settlement according to its terms.

Texas Gas states that copies of the revised tariff sheets are being mailed to all parties on the official service list, to Texas Gas's jurisdictional customers and to interested state commissions.

Any person desiring to protest said filing should file a protest with the Federal Energy Regulatory Commission, 888 First Street, NE., Washington, DC 20426, in accordance with Section 385.211 of the Commission's Rules and Regulations. All such protests must be filed in accordance with Section 154.210 of the Commission's Regulations. Protests will be considered by the Commission in determining the appropriate action to be taken, but will not serve to make protestants parties to the proceedings. Copies of this filing are on file with the Commission and are available for public inspection. This filing may also be viewed on the web at *http://www.ferc.gov* using the ''RIMS'' link, select ''Docket#'' and follow the instructions (call 202–208–2222 for assistance). Comments, protests and interventions may be filed electronically via the Internet in lieu of paper. The Commission strongly encourages electronic filings. See, 18 CFR 385.2001(a)(1)(iii) and the instructions on the Commission's web site under the ''e-Filing'' link.

Linwood A. Watson, Jr.,

Deputy Secretary.

[FR Doc. 02–19930 Filed 8–6–02; 8:45 am]

BILLING CODE 6717–01–P

DEPARTMENT OF ENERGY

Federal Energy Regulatory Commission

[Docket No. RP01–245–010]

Transcontinental Gas Pipe Line Corporation; Notice of Compliance Filing

August 1, 2002.

Take notice that on July 23, 2002, Transcontinental Gas Pipe Line Corporation (Transco), tendered for filing as part of its FERC Gas Tariff, Third Revised Volume No. 1, 3rd Sub Fourth Revised Sheet No. 328 and Second Revised Sheet No. 330, with an effective date of September 1, 2001.

Transco states that the purpose of this filing is to reflect the most recently approved provisions for Rate Zones, of Section 21 of the General Terms and Conditions, in Transco's currently effective tariff. These provisions were inadvertently removed from Transco's tariff by the Commission in its June 28, 2002 Order, in Docket No. RP98–430–002 which approved changes to Section 20 of the General Terms and Conditions (Policy For Construction Of Interconnect Facilities).

Any person desiring to protest said filing should file a protest with the Federal Energy Regulatory Commission, 888 First Street, NE., Washington, DC 20426, in accordance with Section 385.211 of the Commission's Rules and Regulations. All such protests must be filed in accordance with Section 154.210 of the Commission's Regulations. Protests will be considered by the Commission in determining the appropriate action to be taken, but will not serve to make protestants parties to the proceedings. Copies of this filing are on file with the Commission and are available for public inspection. This filing may also be viewed on the web at *http://www.ferc.gov* using the ''RIMS'' link, select ''Docket#'' and follow the instructions (call 202–208–2222 for assistance). Comments, protests and interventions may be filed electronically via the Internet in lieu of paper. The Commission strongly encourages electronic filings. See, 18 CFR 385.2001(a)(1)(iii) and the instructions on the Commission's web site under the ''e-Filing'' link.

Linwood A. Watson, Jr.,

Deputy Secretary.

[FR Doc. 02–19934 Filed 8–6–02; 8:45 am]

BILLING CODE 6717–01–P

DEPARTMENT OF ENERGY

Federal Energy Regulatory Commission

[Docket No. EG02–171–000, et al.]

Genova Arkansas I, LLC, et al.; Electric Rate and Corporate Regulation Filings

July 30, 2002.

The following filings have been made with the Commission. The filings are listed in ascending order within each docket classification.

1. Genova Arkansas I, LLC

[Docket No. EG02–171–000]

Take notice that on July 25, 2002, Genova Arkansas I, LLC, 5700 West Plano Parkway, Suite 1000, Plano, Texas 75093, filed with the Federal Energy Regulatory Commission (Commission) an application for determination of exempt wholesale generator status pursuant to Part 365 of the Commission's regulations.

Genova Arkansas I, LLC is a limited liability company, organized under the laws of the State of Delaware, and states it is engaged directly and exclusively in owning and operating the Genova Arkansas I, LLC electric generating facility (the Project) to be located in Washington County, Arkansas, and

selling electric energy at wholesale from the Project. The Project will consist of a combined cycle combustion turbine unit with a nominal rating of approximately 580 megawatts and associated transmission interconnection components.

Comment Date: August 20, 2002.

2. Ameren Services Company

[Docket No. ER02–1619–001]

Take notice that on July 25, 2002, Ameren Services Company (ASC) tendered for filing a Parallel Operating Agreement between ASC and Clay County Trust 2000. ASC asserts that the purpose of the Agreement is to replace Appendix B—Company Verification attached to the Agreement in Docket No. ER 02–1619–000 with an executed Appendix B—Company Verification.

Comment Date: August 15, 2002.

3. Carolina Power & Light Company and Florida Power Corporation

[Docket Nos. ER01–1807–010 and ER01–2020–007]

Take notice that on July 25, 2002, Progress Energy, Inc., on behalf of Florida Power Corporation (FPC) and Carolina Power & Light Company (CP&L), tendered for filing with the Federal Energy Regulatory Commission (Commission) a redesignated Service Agreement for Firm Point-To-Point Transmission Service (Firm PTP Service Agreement) between FPC and the City of Tallahassee and a redesignated, executed Service Agreement for Network Integration Transmission Service and Network Operating Agreement (collectively, Network Service Agreement) between FPC and Tampa Electric Company. Progress Energy is filing the agreements under both FPC's open-access transmission tariff, FERC Electric Tariff, Second Revised Volume No. 6 and CP&L's open-access transmission tariff, FERC Electric Tariff, Third Revised Volume No. 3, in compliance with the Commission's June 25, 2001, September 21, 2001 and November 26, 2001 orders in these proceedings.

Progress Energy respectfully requests waiver of the Commission's regulations to allow the Firm PTP Service Agreement to become effective December 1, 2000, and the Network Service Agreement to become effective June 18, 2002. Copies of the filing were served upon the City of Tallahassee, Tampa Electric Company, the Florida Public Service Commission and North Carolina Utilities Commission.

Comment Date: August 15, 2002.

4. Ameren Services Company

[Docket No. ER02–1936–003]

Take notice that on July 25, 2002, Ameren Services Company (ASC) tendered for filing a Network Integration Transmission Service Agreement and Network Operating Agreement between ASC and Edgar Electric Cooperative Association, d/b/a EnerStar Power Corp. ASC asserts that the purpose of the Agreement is to replace the unexecuted Agreements in Docket No. ER 02–1936–000 with the executed Agreements.

Comment Date: August 15, 2002.

5. Ameren Services Company

[Docket No. ER02–2176–001]

Take notice that on July 25, 2002, Ameren Services Company (ASC) tendered for filing a Network Integration Transmission Service Agreement and Network Operating Agreement between ASC and Edgar Electric Cooperative Association, d/b/a EnerStar Power Corp. ASC asserts that the purpose of the Agreement is to replace the unexecuted Agreements in Docket No. ER 02–2176–000 with the executed Agreements.

Comment Date: August 15, 2002.

6. Ameren Services Company

[Docket No. ER02–2236–001]

Take notice that on July 25, 2002, Ameren Services Company (ASC) tendered for filing a Firm Point-to-Point Transmission Service Agreement between ASC and American Electric Power Service Corp. ASC asserts that the purpose of the Agreement is to replace the unexecuted Agreement in Docket No. ER 02–2237–000 with the executed Agreement.

Comment Date: August 15, 2002.

7. Central Maine Power Company

[Docket No. ER02–2363–000]

Please take notice that on July 25, 2002, Central Maine Power Company (CMP) and Maine Electric Power Company (MEPCO) tendered for filing a Support Services Agreement for support services provided by CMP to MEPCO, and designated as Rate Schedule FERC No. 115, First Revised

Comment Date: August 15, 2002.

8. Florida Power & Light Company

[Docket No. ER02–2364–000]

Take notice that on July 25, 2002, Florida Power & Light Company (FPL) tendered for filing a Notice of Termination of an Interconnection and Operation Agreement (IOA) between FPL and CPV Atlantic, Ltd. (CPV Atlantic). Termination of the IOA has been mutually agreed to by FPL and CPV Atlantic.

Comment Date: August 15, 2002.

9. PJM Interconnection, L.L.C.

[Docket No. ER02–2365–000]

Take notice that on July 25, 2002 PJM Interconnection, L.L.C. (PJM), submitted for filing with the Federal Energy Regulatory Commission (Commission) an executed interconnection service agreement between PJM and Prince George's County, Maryland.

PJM requests a waiver of the Commission's 60-day notice requirement to permit a June 26, 2002 effective date as agreed to by the parties. Copies of this filing were served upon each of the parties to the agreements and the state regulatory commissions within the PJM region.

Comment Date: August 15, 2002.

10. Louis Dreyfus Energy LLC

[Docket No. ER02–2366–000]

Take notice that on July 25, 2002, Louis Dreyfus Energy LLC petitioned the Federal Energy Regulatory Commission (Commission) for acceptance of its Rate Schedule FERC No. 1, the granting of certain blanket approvals, including the authority to sell electricity at market-based rates, and the waiver of certain of the Commission's Regulations.

Comment Date: August 15, 2002.

11. Ameren Services Company

[Docket No. ER02–2367–000]

Take notice that on July 25, 2002, Ameren Services Company (ASC) tendered for filing a Network Integration Transmission Service Agreement and Network Operating Agreement between ASC and EnerStar Power Corporation, previously d/b/a Edgar Electric Cooperative Association. ASC asserts that the purpose of the Agreement is to replace the unexecuted Agreements in Docket No. ER02–1693–000 with the executed Agreements.

Comment Date: August 15, 2002.

Standard Paragraph

E. Any person desiring to intervene or to protest this filing should file with the Federal Energy Regulatory Commission, 888 First Street, NE., Washington, DC 20426, in accordance with Rules 211 and 214 of the Commission's Rules of Practice and Procedure (18 CFR 385.211 and 385.214). Protests will be considered by the Commission in determining the appropriate action to be taken, but will not serve to make protestants parties to the proceeding. Any person wishing to become a party must file a motion to intervene. All such motions or protests should be filed on or before the comment date, and, to the extent applicable, must be served on the applicant and on any other person

designated on the official service list. This filing is available for review at the Commission or may be viewed on the Commission's web site at *http://www.ferc.gov* using the ''RIMS'' link, select ''Docket #'' and follow the instructions (call 202–208–2222 for assistance). Protests and interventions may be filed electronically via the Internet in lieu of paper; see 18 CFR 385.2001(a)(1)(iii) and the instructions on the Commission's web site under the ''e-Filing'' link.

Magalie R. Salas,

Secretary.

[FR Doc. 02–19916 Filed 8–6–02; 8:45 am]

BILLING CODE 6717–01–P

DEPARTMENT OF ENERGY

Federal Energy Regulatory Commission

[Docket No. CP02–60–000]

CMS Trunkline LNG Company, LLC; Notice of Availability of the Environmental Assessment for the Proposed Trunkline LNG Expansion Project

August 1, 2002.

The staff of the Federal Energy Regulatory Commission (FERC or Commission) has prepared an environmental assessment (EA) on the liquefied natural gas (LNG) facilities proposed by CMS Trunkline LNG Company, LLC (Trunkline LNG) in the above referenced docket.

The EA was prepared to satisfy the requirements of the National Environmental Policy Act. The staff concludes that approval of the proposed project, with appropriate mitigating measures, would not constitute a major Federal action significantly affecting the quality of the human environment.

The EA assesses the potential environmental effects of the proposed project which includes the expansion of the existing Trunkline LNG import terminal in Calcasieu Parish, Louisiana. Trunkline LNG proposes to:

- Construct an LNG ship unloading facility;
- Construct a 880,000-barrel double walled LNG storage tank;
- Construct three first-stage pumps;
- Construct four second-stage pumps, with a recondenser vessel;
- Construct three submerged combustion vaporizers;
- Construct a high expansion foam building;
- Construct an electrical building;
- Construct a cryogenic fuel gas/ship vapor return compressor; and
- Construct two nominal 22 megawatt gas turbine electric generators.

The proposed facilities would expand the storage and sendout capacity of Trunkline LNG's existing LNG import terminal in Calcasieu Parish, Louisiana. The proposal would: (1) Expand the storage capacity of the LNG terminal; (2) increase the sustainable daily sendout capability to 1,200 million standard cubic feet per day (MMscfd) and its peaking capacity to 1,300 MMscfd; and (3) allow the terminal to accommodate two LNG tankers at one time. This filing is related to Docket No. CP02–55–000, CMS Trunkline Gas Company, LLC's proposal to increase the maximum capacity at its metering facilities at the tailgate of the LNG terminal.

The EA has been placed in the public files of the FERC. A limited number of copies of the EA are available for distribution and public inspection at: Federal Energy Regulatory Commission, Public Reference and Files Maintenance Branch, 888 First Street, NE., Room 2A, Washington, DC 20426, (202) 208–1371.

Copies of the EA have been mailed to Federal, state and local agencies, public interest groups, interested individuals, newspapers, and parties to this proceeding.

Any person wishing to comment on the EA may do so. To ensure consideration prior to a Commission decision on the proposal, it is important that we receive your comments before the date specified below. Please carefully follow these instructions to ensure that your comments are received in time and properly recorded:

- Send an original and two copies of your comments to:

Secretary, Federal Energy Regulatory Commission, 888 First St., NE., Room 1A, Washington, DC 20426.

- Label one copy of the comments for the attention of the Gas Branch 1, PJ11.1;
- Reference Docket No. CP02–60–000; and
- Mail your comments so that they will be received in Washington, DC on or before August 30, 2002.

Please note that we are continuing to experience delays in mail deliveries from the U.S. Postal Service. As a result, we will include all comments that we receive within a reasonable time frame in our environmental analysis of this project. However, the Commission encourages electronic filing of any comments or interventions or protests to this proceeding. See 18 CFR 385.2001(a)(1)(iii) and the instructions on the Commission's web site at *http://www.ferc.gov* under the ''e-Filing'' link and the link to the User's Guide. Before you can file comments you will need to create a free account which can be created by clicking on ''Login to File'' and then ''New User Account.''

Comments will be considered by the Commission but will not serve to make the commentor a party to the proceeding. Any person seeking to become a party to the proceeding must file a motion to intervene pursuant to Rule 214 of the Commission's Rules of Practice and Procedures (18 CFR 385.214).[1] Only intervenors have the right to seek rehearing of the Commission's decision.

Affected landowners and parties with environmental concerns may be granted intervenor status upon showing good cause by stating that they have a clear and direct interest in this proceeding which would not be adequately represented by any other parties. You do not need intervenor status to have your comments considered.

Additional information about the proposed project is available from the Commission's Office of External Affairs, at (866) 208-FERC or on the FERC Internet website (www.ferc.gov) using the ''RIMS'' link to information in this docket number. Click on the ''RIMS'' link select ''Docket #'' from the RIMS Menu, and follow the instructions. For assistance with access to RIMS, the RIMS helpline can be reached at (202) 208–2222.

Similarly, the ''CIPS'' link on the FERC Internet website provides access to the texts of formal documents issued by the Commission, such as orders, notices, and rulemakings. From the FERC Internet website, click on the ''CIPS'' link, select ''Docket #'' from the CIPS menu, and follow the instructions. For assistance with access to CIPS, the CIPS helpline can be reached at (202) 208–2222.

Linwood A. Watson, Jr.,

Deputy Secretary.

[FR Doc. 02–19917 Filed 8–6–02; 8:45 am]

BILLING CODE 6717–01–P

DEPARTMENT OF ENERGY

Federal Energy Regulatory Commission

[Project No. 3090–008 Vermont]

Village of Lyndonville Electric Department; Notice of Availability of Environmental Assessment

August 1, 2002.

In accordance with the National Environmental Policy Act of 1969 and

[1] Interventions may also be filed electronically via the Internet in lieu of paper. See the previous discussion on filing comments electronically.

the Federal Energy Regulatory Commission's (Commission) regulations, 18 CFR Part 380 (Order No. 486, 52 F.R. 47897), the Office of Energy Projects has reviewed the application for license for the Vail Hydroelectric Project and has prepared an Environmental Assessment (EA) for the project. The project is located on the Passumpsic River, in the Village of Lyndonville, within the county of Caledonia, Vermont. No federal lands or facilities are occupied or used by the project.

The EA contains the staff's analysis of the potential environmental impacts of the project and concludes that licensing the project, with appropriate environmental protective measures, would not constitute a major federal action that would significantly affect the quality of the human environment.

A copy of the EA is on file with the Commission and is available for public inspection. The EA may also be viewed on the web at *http://www.ferc.gov* using the ''RIMS'' link—select ''Docket #'' and follow the instructions (call 202–208–2222 for assistance).

Any comments should be filed within 30 days from the date of this notice and should be addressed to Magalie R. Salas, Secretary, Federal Energy Regulatory Commission, 888 First Street, NE, Washington, DC 20426. Please affix Project No. 3090–008 to all comments. Comments may be filed electronically via the Internet in lieu of paper. See 18 CFR 385.2001(a)(1)(iii) and the instructions on the Commission's web site under the ''e-Filing'' link. The Commission strongly encourages electronic filings.

For further information, contact Timothy Looney at (202) 219–2852.

Linwood A. Watson, Jr.,

Deputy Secretary.

[FR Doc. 02–19921 Filed 8–6–02; 8:45 am]

BILLING CODE 6717–01–P

DEPARTMENT OF ENERGY

Federal Energy Regulatory Commission

[Project No. 10855–002, Michigan]

Upper Peninsula Power Company, Marquette Board of Light and PowerProject No. 2589–024, Michigan; Notice of Availability of Final Environmental Assessment

August 1, 2002.

In accordance with the National Environmental Policy Act of 1969 and the Federal Energy Regulatory Commission's (Commission) regulations contained in the Code of Federal Regulations, Part 380 (18 CFR part 380) [FERC Order No. 486, 52 FR 47897], the Office of Energy Projects Staff (Staff) has reviewed the application for an initial license for the Dead River Project and a new license for the Marquette Project, both located on the Dead River in Marquette County, Michigan, and has prepared a final environmental assessment (FEA) for the projects. In this FEA, the Staff has analyzed the potential environmental effects of the existing projects and has concluded that licensing the projects, with staff's recommended measures, would not constitute a major federal action significantly affecting the quality of the human environment.

Copies of the FEA are available for review in the Public Reference Branch, Room 2-A, of the Commission's offices at 888 First Street, NE., Washington, DC 20426. This FEA may also be viewed on the Internet at *http://www.ferc.gov* using the ''RIMS'' link; select ''Docket#'' and follow the instructions. Please call (202) 208–2222 for assistance.

Linwood A. Watson, Jr.,

Deputy Secretary.

[FR Doc. 02–19923 Filed 8–6–02; 8:45 am]

BILLING CODE 6717–01–P

DEPARTMENT OF ENERGY

Federal Energy Regulatory Commission

Notice of Transfer of License and Soliciting Comments, Motions to Intervene, and Protests

August 1, 2002.

Take notice that the following hydroelectric application has been filed with the Commission and is available for public inspection:

a. *Application Type:* Transfer of License.

b. *Project No.:* 1895–012.

c. *Date Filed:* July 10, 2002.

d. *Applicants:* South Carolina Electric & Gas Company (Transferor) and the City of Columbia, South Carolina (Transferee).

e. *Name of Project:* Columbia.

f. *Location:* The project is located on the Broad and Congaree Rivers in the City of Columbia and Richland County, South Carolina. The project does not occupy any federal lands.

g. *Filed Pursuant to:* Federal Power Act, 16 U.S.C. 791(a)–825(r).

h. *Applicants Contacts:* Brian J. McManus, Jones, Day, Reavis & Pogue, 51 Louisiana Avenue, NW., Washington, DC 20001–2113, (202) 879–5452 (for the Transferor); Frances E. Francis and William S. Huang, Spiegel & McDiarmid, 1350 New York Avenue, NW., Suite 1100, Washington, DC 20005–4798, (202) 879–4000 (for the Transferee).

i. *FERC Contact:* Regina Saizan, (202) 219–2673.

j. *Deadline for filing comments and or motions:* August 16, 2002.

All documents (original and eight copies) should be filed with: Magalie R. Salas, Secretary, Federal Energy Regulatory Commission, 888 First Street, NE., Washington, DC 20426. Please include the Project Number (1895–012) on any comments or motions filed.

k. *Description of Transfer:* As consideration for entering into a franchise agreement to supply electricity and gas service, South Carolina Electric & Gas Company (SCE&G) has agreed (pursuant to a Conveyance Agreement), to convey to the City of Columbia, South Carolina (City), the Columbia area transit system operated by SCE&G, and the Columbia Project No. 1895. Consequently, SCE&G and the City seek Commission approval to transfer the license for the Columbia Project from SCE&G to the City. On May 30, 2002, the Commission issued SCE&G a new license for the project. 99 FERC ¶ 62,152 (2002), reh'g filed, July 1, 2002. The application also includes a request to delete (as inapplicable to the City) Article 204 (requirement for maintaining amortization reserves) of the new license, upon approval of the transfer.

l. *Location of the Application:* This filing is available for review at the Commission or may be viewed on the Commission's web site at *http://www/ferc/gov* using the ''RIMS'' link, select ''Docket #'' and follow the instructions (call 202–208–2222 for assistance). A copy is also available for inspection and reproduction at the addresses in item h above.

Comments, protests, and interventions may be filed electronically via the Internet in lieu of paper; see 18 CFR 385.2001(a)(1)(iii) and the instructions on the Commission's web site under the ''e-Filing'' link. The Commission strongly encourages electronic filings.

m. Individuals desiring to be included on the Commission's mailing list should so indicate by writing to the Secretary of the Commission.

n. Comments, Protests, or Motions to Intervene—-Anyone may submit comments, a protest, or a motion to intervene in accordance with the requirements of Rules of Practice and Procedure, 18 CFR 385.210, .211, 214. In determining the appropriate action to

take, the Commission will consider all protests or other comments filed, but only those who file a motion to intervene in accordance with the Commission's Rules may become a party to the proceeding. Any comments, protests, or motions to intervene must be received on or before the specified comment date for the particular application.

o. Filing and Service of Responsive Documents—-Any filings must bear in all capital letters the title ''COMMENTS'', ''RECOMMENDATIONS FOR TERMS AND CONDITIONS'', ''PROTEST'', OR ''MOTION TO INTERVENE'', as applicable, and the Project Number of the particular application to which the filing refers. A copy of any motion to intervene must also be served upon each representative of the Applicant specified in the particular application.

p. Agency Comments—-Federal, state, and local agencies are invited to file comments on the described application. A copy of the application may be obtained by agencies directly from the Applicant. If an agency does not file comments within the time specified for filing comments, it will be presumed to have no comments. One copy of an agency's comments must also be sent to the Applicant's representatives.

Linwood A. Watson, Jr.,

Deputy Secretary.

[FR Doc. 02–19918 Filed 8–6–02; 8:45 am]

BILLING CODE 6717–01–P

DEPARTMENT OF ENERGY

Federal Energy Regulatory Commission

Notice of Temporary Variance and Soliciting Comments, Motions To Intervene, and Protests

August 1, 2002.

Take notice that the following application has been filed with the Commission and is available for public inspection:

a. *Application Type:* Request for temporary variance to minimum flow releases.

b. *Project No:* 2197–054.

c. *Date Filed:* July 22 and July 26, 2002.

d. *Applicant:* Alcoa Power Generating Inc.

e. *Name of Project:* Yadkin.

f. *Location:* The project is located on the Yadkin/Pee Dee River, in Montgomery, Stanley, Davidson, Rowan, and Davie Counties, North Carolina.

g. *Filed Pursuant to:* Federal Power Act, 16 USC 791 (a) 825(r) and §§ 799 and 801.

h. *Applicant Contact:* Julian Polk, Alcoa Power Generating Inc., 293 NC 740 Highway, P.O. Box 576, Badin, NC 28009–0576, (704) 422–5617.

i. *FERC Contact:* Any questions on this notice should be addressed to Mr. T.J. LoVullo at (202) 219–1168, or e-mail address: *thomas.lovullo@ferc.gov* .

j. *Deadline for filing comments and or motions:* August 23, 2002.

All documents (original and eight copies) should be filed with: Ms. Magalie R. Salas, Secretary, Federal Energy Regulatory Commission, 888 First Street, NE., Washington DC 20426. Please include the project number (P–2197) on any comments or motions filed.

k. *Description of Request:* As the result of a meeting held on July 25, 2002, Alcoa Power Generating Inc. (APGI or licensee), Duke Energy, Carolina Power and Light, Commission staff, and representatives from the resources agencies with responsibility for water for the States of North Carolina and South Carolina concerning the drought in the project area and reservoir levels in the project reservoirs, there emerged a consensus that it would be prudent on behalf of all users of water in the watershed to further reduce minimum releases from the Yadkin Project from 1,200 cubic feet per second (cfs) to 900 cfs as measured at the Rockingham, NC stream gage. Accordingly, APGI requested from the Commission that it be granted a temporary variance of the license requirements permitting APGI to coordinate Yadkin Project operations with Carolina Power and Light's Tillery and Blewett Falls developments such that Pee Dee River flows, measured at the Rockingham gage, are at least 900 cfs on a daily basis through September 15, 2002. Secondly, APGI requested a temporary variance of the operating guides to draw down Narrows reservoir (Badin Lake) at increments to be determined in consultation with the Water Resources Division of the North Carolina Department of Environment and Natural Resources. On July 30, 2002, the Commission granted the licensee's requests, but reserved authority to require changes in project operation based upon comments received from this notice.

l. *Location of the Application:* A copy of the application is available for inspection and reproduction at the Commission's Public Reference Room, located at 888 First Street, NE, Room 2A, Washington, DC 20426, or by calling (202) 208–1371. This filing may also be viewed on the web at *http://www.ferc.gov* using the ''RIMS'' link, select ''Docket#'' and follow the instructions (call 202–208–2222 for assistance). A copy is also available for inspection and reproduction at the address in item (h) above.

m. Individuals desiring to be included on the Commission's mailing list should so indicate by writing to the Secretary of the Commission.

n. Comments, Protests, or Motions to Intervene—Anyone may submit comments, a protest, or a motion to intervene in accordance with the requirements of Rules of Practice and Procedure, 18 CFR 385.210, .211, .214. In determining the appropriate action to take, the Commission will consider all protests or other comments filed, but only those who file a motion to intervene in accordance with the Commission's Rules may become a party to the proceeding. Any comments, protests, or motions to intervene must be received on or before the specified comment date for the particular application.

o. Filing and Service of Responsive Documents—Any filings must bear in all capital letters the title ''COMMENTS'', ''RECOMMENDATIONS FOR TERMS AND CONDITIONS'', ''PROTEST'', OR ''MOTION TO INTERVENE'', as applicable, and the Project Number of the particular application to which the filing refers. A copy of any motion to intervene must also be served upon each representative of the Applicant specified in the particular application.

p. Agency Comments—Federal, state, and local agencies are invited to file comments on the described application. A copy of the application may be obtained by agencies directly from the Applicant. If an agency does not file comments within the time specified for filing comments, it will be presumed to have no comments. One copy of an agency's comments must also be sent to the Applicant's representatives.

q. Comments, protests and interventions may be filed electronically via the Internet in lieu of paper. See, 18 CFR 385.2001(a)(1)(iii) and the instructions on the Commission's web site at *http://www.ferc.gov* under the ''e-Filing'' link. The Commission strongly encourages electronic filings.

Linwood A. Watson, Jr.,

Deputy Secretary.

[FR Doc. 02–19919 Filed 8–6–02; 8:45 am]

BILLING CODE 6717–01–P

DEPARTMENT OF ENERGY

Federal Energy Regulatory Commission

Notice of Transfer of License and Soliciting Comments, Motions To Intervene, and Protests

August 1, 2002.

Take notice that the following hydroelectric application has been filed with the Commission and is available for public inspection:

a. *Application Type:* Transfer of License.

b. *Project No:* 7000–017.

c. *Date Filed:* July 19, 2002.

d. *Applicants:* Newton Falls Holdings, LLC (transferor) and Orion Power New York GP II, Inc. (transferee).

e. *Project Name and Location:* The Newton Falls Project is on the East Branch of the Oswegatchie River near the Village of Newton Falls in St. Lawrence County, New York. The project does not occupy federal or tribal lands.

f. *Filed Pursuant to:* Federal Power Act, 16 U.S.C. 791(a)—825(r).

g. *Applicant Contacts:* For Transferor: Harold G. Slone, Manager, Newton Falls Holdings, LLC, 1930 West Wesley Road, NW., Atlanta, GA 30327, (770) 638–1172. For Transferee: William J. Madden, Jr., Winston & Strawn, 1400 L Street, NW, Washington, DC 20005–3502, (202) 371–5715.

h. *FERC Contact:* James Hunter, (202) 219–2839.

i. *Deadline for filing motions to intervene, protests, and comments:* August 30, 2002.

All documents (original and eight copies) should be filed with: Magalie R. Salas, Secretary, Federal Energy Regulatory Commission, 888 First Street, NE., Washington, DC 20426. Comments, protests and interventions may be filed electronically via the Internet in lieu of paper; see 18 CFR 385.2001(a)(1)(iii) and the instructions on the Commission's web site under the ''e-Filing'' link. The Commission strongly encourages electronic filngs. Please include the project number (P–7000–017) on any comments or motions filed.

j. *Description of Proposal:* The Applicants request approval of the transfer of the license for Project No. 7000 from the transferor to the transferee, in connection with the proposed sale of the project.

The transfer application was filed within five years of the expiration of the license for Project No. 7000, which is the subject of a pending relicense application in Project No. 7000–015. In Hydroelectric Relicensing Regulations Under the Federal Power Act (54 FR 23,756; FERC Stats. and Regs., Regs. Preambles 1986–1990 30,854 at p. 31,437), the Commission declined to forbid all license transfers during the last five years of an existing license, and instead indicated that it would scrutinize all such transfer requests to determine if the primary purpose of the transfer was to give the transferee an advantage in relicensing (id. at p. 31,438 n. 318).

k. This filing is available for review at the Commission or may be viewed on the Commission's web site at *http://www.ferc.gov* using the ''RIMS'' link, select ''Docket #'' and follow the instructions (call (202) 208–2222 for assistance). A copy is also available for inspection and reproduction at the addresses in item g above.

l. Individuals desiring to be included on the Commission's mailing list should so indicate by writing to the Secretary of the Commission.

Comments, Protests, or Motions to Intervene—Anyone may submit comments, a protest, or a motion to intervene in accordance with the requirements of Rules of Practice and Procedure, 18 CFR 385.210, .211, .214. In determining the appropriate action to take, the Commission will consider all protests or other comments filed, but only those who file a motion to intervene in accordance with the Commission's Rules may become a party to the proceeding. Any comments, protests, or motions to intervene must be received on or before the specified comment date for the particular application.

Filing and Service of Responsive Documents—Any filings must bear in all capital letters the title ''COMMENTS'', ''RECOMMENDATIONS FOR TERMS AND CONDITIONS'', ''PROTEST'', OR ''MOTION TO INTERVENE'', as applicable, and the Project Number of the particular application to which the filing refers. Any of the above-named documents must be filed by providing the original and the number of copies provided by the Commission's regulations to: The Secretary, Federal Energy Regulatory Commission, 888 First Street, NE., Washington, D.C. 20426. A copy of any motion to intervene must also be served upon each representative of the Applicant specified in the particular application.

Agency Comments—Federal, state, and local agencies are invited to file comments on the described application. A copy of the application may be obtained by agencies directly from the Applicant. If an agency does not file comments within the time specified for filing comments, it will be presumed to have no comments. One copy of an agency's comments must also be sent to the Applicant's representatives.

Linwood A. Watson, Jr.,

Deputy Secretary.

[FR Doc. 02–19922 Filed 8–6–02; 8:45 am]

BILLING CODE 6717–01–P

DEPARTMENT OF ENERGY

Federal Energy Regulatory Commission

Notice of Application Accepted for Filing and Soliciting Comments, Motions To Intervene, and Protests

August 1, 2002.

Take notice that the following hydroelectric application has been filed with the Commission and is available for public inspection:

a. *Type of Application:* Preliminary Permit.

b. *Project No:* 12249–000.

c. *Date Filed:* June 18, 2002.

d. *Applicant:* Waco Hydro, LLC.

e. *Name of Project:* Waco Dam Hydroelectric Project.

f. *Location:* The proposed project would be located on an existing dam owned by the U.S. Army Corps of Engineers (Corps), on the Bosque River in McLennan County, Texas.

g. *Filed Pursuant to:* Federal Power Act, 16 U.S.C. 791(a)–825(r).

h. *Applicant Contact:* Mr. Brent L. Smith, Northwest Power Services, Inc., P.O. Box 535, Rigby, ID 83442, (208) 745–8630, (fax) (208) 745–7909, or e-mail address: *npsihydro@aol.com*.

i. *FERC Contact:* Any questions on this notice should be addressed to Mr. Lynn R. Miles, Sr. at (202) 219–2671, or e-mail address: *lynn.miles@ferc.fed.us*.

j. *Deadline for filing motions to intervene, protests and comments:* 60 days from the issuance date of this notice.

All documents (original and eight copies) should be filed with: Magalie R. Salas, Secretary, Federal Energy Regulatory Commission, 888 First Street, NE., Washington, DC 20426. Comments, protests and interventions may be filed electronically via the Internet in lieu of paper; *see* 18 CFR 385.2001(a)(1)(iii) and the instructions on the Commission's web site under the ''e-Filing'' link. The Commission strongly encourages electronic filings. Please include the project number (P–12249–000) on any comments or motions filed.

The Commission's Rules of Practice and Procedure require all interveners

filing documents with the Commission to serve a copy of that document on each person in the official service list for the project. Further, if an intervener files comments or documents with the Commission relating to the merits of an issue that may affect the responsibilities of a particular resource agency, they must also serve a copy of the document on that resource agency.

k. *Description of Project:* The proposed run-of-river project using the existing Corps' Waco Dam would consist of; (1) a 96-inch-diameter 500-foot-long steel penstock; (2) a powerhouse containing one generating unit with an installed capacity of 4 MW; (3) a 25 kv transmission line approximately 1 mile long; and (4) appurtenant facilities.

The project would have an annual generation of 5.4 GWh.

l. This filing is available for review at the Commission or may be viewed on the Commission's web site at *http://www.ferc.gov* using the ''RIMS'' link, select ''Docket #'' and follow the instructions (call 202–208–2222 for assistance). A copy is also available for inspection and reproduction at the address in item h above.

m. Preliminary Permit—Anyone desiring to file a competing application for preliminary permit for a proposed project must submit the competing application itself, or a notice of intent to file such an application, to the Commission on or before the specified comment date for the particular application (*see* 18 CFR 4.36). Submission of a timely notice of intent allows an interested person to file the competing preliminary permit application no later than 30 days after the specified comment date for the particular application. A competing preliminary permit application must conform with 18 CFR 4.30(b) and 4.36.

n. Preliminary Permit—Any qualified development applicant desiring to file a competing development application must submit to the Commission, on or before a specified comment date for the particular application, either a competing development application or a notice of intent to file such an application. Submission of a timely notice of intent to file a development application allows an interested person to file the competing application no later than 120 days after the specified comment date for the particular application. A competing license application must conform with 18 CFR 4.30(b) and 4.36.

o. Notice of Intent—A notice of intent must specify the exact name, business address, and telephone number of the prospective applicant, and must include an unequivocal statement of intent to submit, if such an application may be filed, either a preliminary permit application or a development application (specify which type of application). A notice of intent must be served on the applicant(s) named in this public notice.

p. Proposed Scope of Studies under Permit—A preliminary permit, if issued, does not authorize construction. The term of the proposed preliminary permit would be 36 months. The work proposed under the preliminary permit would include economic analysis, preparation of preliminary engineering plans, and a study of environmental impacts. Based on the results of these studies, the Applicant would decide whether to proceed with the preparation of a development application to construct and operate the project.

q. Comments, Protests, or Motions to Intervene—Anyone may submit comments, a protest, or a motion to intervene in accordance with the requirements of Rules of Practice and Procedure, 18 CFR 385.210, .211, .214. In determining the appropriate action to take, the Commission will consider all protests or other comments filed, but only those who file a motion to intervene in accordance with the Commission's Rules may become a party to the proceeding. Any comments, protests, or motions to intervene must be received on or before the specified comment date for the particular application.

r. Filing and Service of Responsive Documents—Any filings must bear in all capital letters the title ''COMMENTS'', ''NOTICE OF INTENT TO FILE COMPETING APPLICATION'', ''COMPETING APPLICATION'', ''PROTEST'', ''MOTION TO INTERVENE'', as applicable, and the Project Number of the particular application to which the filing refers. Any of the above-named documents must be filed by providing the original and the number of copies provided by the Commission's regulations to: The Secretary, Federal Energy Regulatory Commission, 888 First Street, NE., Washington, DC 20426. An additional copy must be sent to Director, Division of Hydropower Administration and Compliance, Federal Energy Regulatory Commission, at the above-mentioned address. A copy of any notice of intent, competing application or motion to intervene must also be served upon each representative of the Applicant specified in the particular application.

s. Agency Comments—Federal, state, and local agencies are invited to file comments on the described application. A copy of the application may be obtained by agencies directly from the Applicant. If an agency does not file comments within the time specified for filing comments, it will be presumed to have no comments. One copy of an agency's comments must also be sent to the Applicant's representatives.

Linwood A. Watson, Jr.,

Deputy Secretary.

[FR Doc. 02–19924 Filed 8–6–02; 8:45 am]

BILLING CODE 6717–01–P

ENVIRONMENTAL PROTECTION AGENCY

[OPP–2002–0122; FRL–7184–9]

Cancellation of Pesticides for Non-payment of Year 2002 Registration Maintenance Fees

AGENCY: Environmental Protection Agency (EPA).

ACTION: Notice.

SUMMARY: Since the amendments of October, 1988, the Federal Insecticide, Fungicide, and Rodenticide Act (FIFRA) has required payment of an annual maintenance fee to keep pesticide registrations in effect. The fee due last January 15 has gone unpaid for 914 registrations. Section 4(i)(5)(G) of FIFRA provides that the Administrator may cancel these registrations by order and without a hearing; orders to cancel all 914 of these registrations have been issued within the past few days.

FOR FURTHER INFORMATION CONTACT: For further information on the maintenance fee program in general, contact by mail: John Jamula, Office of Pesticide Programs (7504C), Environmental Protection Agency, 1200 Pennsylvania Avenue NW, Washington, DC 20460; telephone number: (703) 305–6426; e-mail address: jamula.john@epa.gov

SUPPLEMENTARY INFORMATION:

I. Important Information

A. Does This Apply to Me?

You may be potentially affected by this notice if you are an EPA registrant with any approved product registration(s). Although this action may be of particular interest to persons who produce or use pesticides, the Agency has not attempted to describe all the specific entities that may be affected by this action. If you have any questions regarding the information in this notice, consult the person listed in the **FOR FURTHER INFORMATION CONTACT** section.

B. How Can I Get Additional Information or Copies of Support Documents

You may obtain electronic copies of this document, and certain other related documents that might be available electronically, from the EPA Internet Home Page at http://www.epa.gov/. To access this document, on the Home Page select ''Laws and Regulations,'' ''Regulations and Proposed Rules,'' and then look up the entry for this document under the ''Federal Register—Environmental Documents.'' You can also go directly to the **Federal Register** listings at http://www.epa.gov/fedrgstr/.

The Agency has established an official record for this action under docket control number OPP–2002–0122. The official record consists of the documents specifically referenced in this action, any public comments received during an applicable comment period, and other information related to this action, including any information claimed as Confidential Business Information (CBI). This official record includes the documents that are physically located in the docket, as well as the documents that are referenced in those documents. The public version of the official record does not include any information claimed as CBI. The public version of the official record, which includes printed, paper versions of any electronic comments submitted during an applicable comment period, is available for inspection in the Public Information and Records Integrity Branch (PIRIB), Rm. 119, Crystal Mall #2, 1921 Jefferson Davis Hwy., Arlington, VA, from 8:30 a.m. to 4 p.m., Monday through Friday, excluding legal holidays. The PIRIB telephone number is (703) 305–5805.

II. Introduction

Section4(i)(5) of FIFRA as amended in October, 1988 (Public Law 100–532), December, 1991 (Public Law 102–237), and again in August, 1996 (Public Law 104–170), requires that all pesticide registrants pay an annual registration maintenance fee, due by January 15 of each year, to keep their registrations in effect. This requirement applies to all registrations granted under section 3 as well as those granted under section 24(c) to meet special local needs. Registrations for which the fee is not paid are subject to cancellation by order and without a hearing.

The Food, Agriculture, Conservation, and Trade Act Amendments of 1991, Public Law 102–237, amended FIFRA to allow the Administrator to reduce or waive maintenance fees for minor agricultural use pesticides when she determines that the fee would be likely to cause significant impact on the availability of the pesticide for the use. The Agency has waived the fee for 133 minor agricultural use registrations at the request of the registrants.

In late December, 2001, all holders of either section 3 registrations or section 24(c) registrations were sent lists of their active registrations, along with forms and instructions for responding. They were asked to identify which of their registrations they wished to maintain in effect, and to calculate and remit the appropriate maintenance fees. Most responses were received by the statutory deadline of January 15. A notice of intent to cancel was sent in mid-February to companies who did not respond and to companies who responded, but paid for less than all of their registrations.

Since mailing the notices, EPA has maintained a toll-free inquiry number through which the questions of affected registrants have been answered.

Maintenance fees have been paid for about 15,444 section 3 registrations, or about 95 percent of the registrations on file in December. Fees have been paid for about 2,204 section 24(c) registrations, or about 79 percent of the total on file in December. Cancellations for non-payment of the maintenance fee affect about 511 section 3 registrations and about 403 section 24(c) registrations.

The cancellation orders generally permit registrants to continue to sell and distribute existing stocks of the canceled products until January 15, 2003, one year after the date on which the fee was due. Existing stocks already in the hands of dealers or users, however, can generally be distributed, sold or used legally until they are exhausted. Existing stocks are defined as those stocks of a registered pesticide product which are currently in the U.S. and which have been packaged, labeled and released for shipment prior to the effective date of the action.

The exceptions to these general rules are cases where more stringent restrictions on sale, distribution, or use of the products have already been imposed, through Special Reviews or other Agency actions. These general provisions for disposition of stocks should serve in most cases to cushion the impact of these cancellations while the market adjusts.

III. Listing of Registrations Canceled for Non-payment

Table 1 lists all of the Section 24(c)registrations, and Table 2 Lists all of the Section 3 registrations which were canceled for non-payment of the 2002 maintenance fee. These registrations have been canceled by order and without hearing. Cancellation orders were sent to affected registrants via certified mail in the past several days. The Agency is unlikely to rescind cancellation of any particular registration unless the cancellation resulted from Agency error.

TABLE 1.—SECTION 24(C) REGISTRATIONS CANCELED FOR NON-PAYMENT OF MAINTENANCE FEE

SLN no.	Product Name
009779 AL–80–0022	Riverside 912 Herbicide
003125 AL–81–0026	Sencor 4 Flowable Herbicide
038167 AL–91–0001	Weed-Rhap A-4D
000279 AL–93–0005	Command 4EC
000279 AL–94–0008	Ammo 2.5 EC Insecticide
059639 AL–99–0001	Select Herbicide
054555 AL–99–0002	Dormex
000279 AR–01–0001	Command Xtra Herbicide
000432 AR–81–0009	SBP-1382 - 40 MF ''Z'' Oil Base Concentrate
000100 AR–88–0004	D-Z-N Diazinon 50W Insecticide
000100 AR–88–0005	D.Z.N. Diazinon AG 500
000432 AR–89–0007	Permanone Multi-Purpose 10% E. C.
009779 AR–96–0007	Riverside 912 Herbicide
010182 AZ–01–0004	Cyclone Concentrate/ Gramoxone Max
007173 AZ–77–0006	Rozol Ground Squirrel Bait
010163 AZ–80–0010	Gowan Dimethoate E267
034704 AZ–81–0001	Dimethogon 267 EC
000400 AZ–81–0022	Comite Agricultural Miticide
004581 AZ–87–0018	Des-I-Cate
034704 AZ–88–0007	Clean Crop Dimethoate 400
000432 AZ–88–0023	Pyraperm 455 Dust
010182 AZ–91–0008	Stauffer Eptam 7-E Granules
000241 AZ–92–0007	Prowl 3.3 EC Herbicide
005905 AZ–93–0011	5LB Dimethoate Systemic Insecticide
010182 AZ–95–0002	Eptam (r) 20. G Granules
009779 AZ–96–0001	Dimate 4E
010182 AZ–98–0006	Gramoxone Extra Herbicide
066196 AZ–98–0010	Lime-Sulfur Solution
010163 AZ–99–0002	Supracide 25WP

TABLE 1.—SECTION 24(C) REGISTRATIONS CANCELED FOR NON-PAYMENT OF MAINTENANCE FEE—Continued

SLN no.	Product Name
000275 CA–00–0009	Pro-Gibb 4% Liquid Concentrate
059639 CA–00–0010	Nylar Fire Ant Bait 26291
073554 CA–00–0012	Clean Crop(r) Amine 4CA 2,4-D Weed Killer
000275 CA–00–0015	Pro-Gibb 4% Liquid Concentrate
054555 CA–01–0005	Dormex
002935 CA–76–0114	Red-Top Strike Granular
000100 CA–78–0034	D-Z-N Diazinon 50W
010182 CA–78–0075	Ro-Neet 6e A Selective Herbicide Emulsifiable Liquid
002935 CA–78–0203	Red Top Chlorate Concentrate
059639 CA–79–0219	Volck Supreme Spray
052300 CA–83–0013	Niagara Pyrenone Crop Spray Insecticide
059623 CA–85–0060	Du Pont Karmex Weed Killer
000264 CA–86–0064	Rovral Fungicide
063231 CA–86–0067	Bacti-Chlor
059639 CA–87–0020	Orthene 75 S Soluble Powder
010182 CA–87–0025	Ambush Insecticide
037982 CA–89–0050	Chlorine Gas
002935 CA–90–0018	Wilbur-Ellis Sevin 5 Bait
065391 CA–91–0018	Avid 0.15 EC
068132 CA–94–0020	Pro-Gibb 4% Liquid Concentrate
063231 CA–94–0021	Dithane WF Turf & Ornamental Fungicide
000100 CA–94–0033	D-Z-N Diazinon 50W Insecticide
070165 CA–96–0018	Metasystox-R Spray Concentrate
000432 CA–97–0018	Chipco Ronstar 50 WSP Herbicide
005481 CA–97–0025	Dibrom 8 Emulsive
000241 CA–98–0006	Prowl 3.3 EC Herbicide
000241 CA–98–0009	Prowl 3.3 EC Herbicide
071857 CA–98–0014	Dylox 80 Turf and Ornamental Insecticide
000524 CA–98–0020	MON-65005 Herbicide
010182 CA–98–0025	Gramoxone Extra Herbicide
054555 CA–99–0001	Dormex
010182 CA–99–0009	Abound Flowable Fungicide

TABLE 1.—SECTION 24(C) REGISTRATIONS CANCELED FOR NON-PAYMENT OF MAINTENANCE FEE—Continued

SLN no.	Product Name
010163 CA–99–0023	Savey Ovicide/miticide 50-WP
059639 CO–98–0002	Dibrom 8 Emulsive
050534 CT–96–0003	Bravo 720
050534 CT–96–0004	Bravo 825
034704 DC–90–0001	Sprout Nip Emulsifiable Concentrate
074156 DE–01–0001	Sandea Herbicide
000432 DE–81–0001	SBP-1382 - 40 MF ''Z'' Oil Base Concentrate
000279 DE–89–0001	Command 4EC
000279 DE–90–0002	Command 4EC
000279 DE–93–0002	Command 4EC
000279 DE–96–0001	Command 4EC Herbicide
010163 FL–00–0005	Imidan 70-WP Agricultural Insecticide
000264 FL–00–0014	Aliette WDG Fungicide
000279 FL–77–0039	Niagara Ethion 4 Miscible Miticide Insecticide
000100 FL–78–0059	Geigy Diazinon AG 500
000100 FL–78–0060	D-Z-N Diazinon 50W
000432 FL–82–0045	Chipco Ronstar G
004581 FL–87–0006	Aquathol Granular
009779 FL–88–0009	Farmbelt 455 Soluble Oil
000100 FL–89–0024	D-Z-N Diazinon 50W Insecticide
000100 FL–89–0025	D.Z.N. Diazinon AG 500
000432 FL–89–0043	Permanone Multi-Purpose 10% E. C.
000100 FL–90–0002	Pennant Liquid Herbicide
062719 FL–90–0005	Lorsban 50W Wettable Powder
000400 FL–94–0008	Micromite 25W
008536 FL–97–0006	Methyl Bromide 98%
054555 FL–99–0011	Dormex
000279 GA–00–0002	Command 3ME Microencapsulated Herbicide
005905 GA–82–0001	Dimethoate 267 EC
000100 GA–88–0007	D-Z-N Diazinon 50W Insecticide
000100 GA–88–0008	D.Z.N. Diazinon AG 500
000279 GA–93–0001	Command 4EC
062719 GA–93–0003	Lorsban 50W
062719 GA–93–0004	Lorsban 50W Insecticide In Water Soluble Packets
000279 GA–96–0001	Command 4EC Herbicide
054555 GA–99–0002	Dormex

TABLE 1.—SECTION 24(C) REGISTRATIONS CANCELED FOR NON-PAYMENT OF MAINTENANCE FEE—Continued

SLN no.	Product Name
012455 HI–91–0004	Diphacinone Concentrate
059639 HI–91–0007	Volck Supreme Spray
000100 HI–91–0009	Tilt 250 EC
061282 HI–96–0007	Zinc Phosphide Oat Bait
000432 HI–97–0001	Chipco Ronstar G Herbicide
037982 HI–98–0009	Chlorine Gas
010182 ID–01–0008	Cyclone Concentrate/ Gramoxone Max
010182 ID–01–0009	Cyclone Concentrate/ Gramoxone Max
010182 ID–01–0010	Cyclone Concentrate/ Gramoxone Max
012455 ID–82–0025	Ditrac Rat and Mouse Bait
009779 ID–90–0001	Dimate 4E
007173 ID–92–0003	Rozol Paraffinized Pellets
010182 ID–92–0010	Gramoxone Extra Herbicide
010182 ID–93–0006	Gramoxone Extra Herbicide
000264 ID–93–0014	Rovral Fungicide
010163 ID–95–0001	Metasystox-R Spray Concentrate
010163 ID–95–0002	Metasystox-R Spray Concentrate
000100 ID–96–0010	Supracide 25WP Insecticide-Miticide
010163 ID–97–0005	Savey Ovicide/miticide 50-WP
009779 ID–97–0014	Dimate 4E
003125 ID–99–0001	Admire 2 Flowable
000524 ID–99–0021	MON-65005 Herbicide
000524 ID–99–0022	MON-65005 Herbicide
000279 IL–00–0003	Command 3ME Microencapsulated Herbicide
000279 IL–00–0004	Command 3ME Microencapsulated Herbicide
000279 IL–00–0005	Command 4EC Herbicide
010182 IL–90–0003	Ro-Neet 6-E
000279 IL–96–0002	Command 4EC Herbicide
000279 IL–99–0005	Command 3ME Microencapsulated Herbicide
004581 IN–96–0001	Ziram 76DF Fungicide
000241 KS–00–0001	Ac 263, 222 Herbicide
000279 KY–93–0002	Command 4EC
000279 KY–96–0003	Command 4EC Herbicide
003125 LA–00–0001	Baythroid 2 Emulsifiable Pyrethroid Insecticide
000241 LA–01–0007	Pursuit Herbicide

TABLE 1.—SECTION 24(C) REGISTRATIONS CANCELED FOR NON-PAYMENT OF MAINTENANCE FEE—Continued

SLN no.	Product Name
000100 LA–01–0015	Cyclone Concentrate/ Gramoxone Max
009779 LA–90–0013	Riverside 912 Herbicide
009779 LA–90–0014	Riverside 120 Herbicide
000279 LA–91–0021	Pounce 3.2 EC Insecticide
004581 LA–94–0001	Penncozeb 75DF Fungicide
000279 LA–94–0002	Ammo 2.5 EC Insecticide
000352 LA–95–0016	Dupont Lannate Insecticide
000352 LA–95–0017	Dupont Lannate LV Insecticide
000241 LA–96–0002	Scepter Herbicide
000241 LA–96–0003	Scepter 70 DG Herbicide
000400 LA–96–0011	Dimilin 25W for Cotton/ Soybean
009779 LA–98–0006	Riverside 912 Herbicide
054555 LA–99–0001	Dormex
004816 MA–89–0001	Larvin Brand 3.2 Thiodicarb Insecticide/ Ovicide
050534 MA–90–0001	Bravo 720
050534 MA–96–0001	Bravo 825
000279 MD–88–0001	Command 4EC
000100 ME–77–0001	Geigy Diazinon AG 500
000100 ME–81–0003	Geigy Diazinon AG 500
000279 ME–94–0004	Command 4EC
050534 ME–95–0001	Bravo 500
050534 ME–96–0002	Bravo 720
050534 ME–96–0003	Bravo 825
001812 MI–91–0005	Granular Crystals Copper Sulfate
050534 MI–96–0001	Bravo 720
004581 MI–96–0002	Ziram 76DF Fungicide
000279 MI–96–0003	Command 4EC Herbicide
000279 MI–96–0004	Command 4EC Herbicide
000279 MI–96–0005	Command 4EC Herbicide
050534 MI–96–0008	Bravo 720
050534 MI–96–0009	Bravo Zn
050534 MN–00–0002	Bravo Weather Stik Zn
056576 MN–01–0001	Copper Sulfate Crystals
042750 MN–01–0006	MCPA Amine 4
072407 MN–01–0009	Sulphuric Acid Desiccant
000279 MN–01–0010	Aim Herbicide
050534 MN–96–0001	Bravo 720
050534 MN–96–0002	Bravo ZN

TABLE 1.—SECTION 24(C) REGISTRATIONS CANCELED FOR NON-PAYMENT OF MAINTENANCE FEE—Continued

SLN no.	Product Name
003125 MN–99–0006	Admire 2 Flowable
000279 MN–99–0009	Command 3ME Microencapsulated Herbicide
000279 MN–99–0010	Command 3ME Microencapsulated Herbicide
050534 MO–77–0005	Bueno-6
004643 MO–92–0006	Dearcide 723
000279 MO–96–0003	Command 4EC Herbicide
054555 MS–00–0002	Dormex
007138 MS–01–0040	2,4-D Amine Type Weed Killer
000100 MS–88–0005	D-Z-N Diazinon 50W Insecticide
000100 MS–88–0006	D.Z.N. Diazinon AG 500
038167 MS–89–0019	Liquid DSMA
038167 MS–89–0020	Msma Arsonate Liquid
009779 MS–90–0007	Mcpa Amine Herbicide
009779 MS–90–0008	2,4-D Amine 4
009779 MS–90–0029	Riverside 912 Herbicide
009779 MS–90–0031	Dsma 4
038167 MS–91–0002	Weed-Rhap A-4D
000279 MS–93–0003	Command 4EC
000279 MS–94–0004	Ammo 2.5 EC Insecticide
009779 MS–96–0012	Riverside 912 Herbicide
010163 MT–00–0002	Supracide 25W
010182 MT–00–0006	Gramoxone Extra Herbicide
000432 MT–89–0005	Permanone Tick Repellent
010182 MT–94–0005	Gramoxone Extra Herbicide
003125 MT–99–0001	Admire 2 Flowable
000524 MT–99–0016	MON-65005 Herbicide
000524 MT–99–0017	MON-65005 Herbicide
000352 NC–89–0010	Dupont Asana XL Insecticide
000279 NC–93–0002	Command 4EC
010163 NC–95–0009	Imidan 70-WSB/Imidan 70 - WP
010163 NC–98–0006	Imidan 70-WSB
050534 NC–99–0003	Bravo 825
050534 NC–99–0004	Bravo 720
050534 ND–00–0003	Bravo Weather Stik ZN
042750 ND–01–0006	Glyphosate 41% Plus
003125 ND–93–0004	Sencor 4 Flowable Herbicide
050534 ND–95–0003	Bravo 720
050534 ND–95–0004	Bravo ZN

TABLE 1.—SECTION 24(C) REGISTRATIONS CANCELED FOR NON-PAYMENT OF MAINTENANCE FEE—Continued

SLN no.	Product Name
000264 ND–96–0003	Bugle Herbicide
003125 ND–99–0005	Admire 2 Flowable
010182 ND–99–0011	Bravo 720
000524 ND–99–0013	MON-65005 Herbicide
000279 NE–01–0003	Aim Herbicide
010707 NE–95–0002	Magnacide H Herbicide
050534 NE–97–0004	Bravo ZN
050534 NE–97–0005	Bravo 825
003125 NJ–00–0003	Admire 2 Flowable
000241 NJ–94–0004	Abate 4E Insecticide
000241 NJ–94–0005	Abate 5-G Insecticide
000279 NJ–95–0001	Command 4EC Herbicide
000279 NJ–95–0002	Command 4EC Herbicide
000352 NJ–95–0009	Dupont Asana XL Insecticide
050534 NJ–96–0001	Bravo 720
050534 NJ–96–0002	Bravo 825
000279 NJ–96–0006	Command 4EC Herbicide
050534 NJ–97–0002	Bravo 825
050534 NJ–97–0003	Bravo 720
000279 NJ–99–0003	Command 4EC Herbicide
008329 NJ–99–0008	Abate 5-G Insecticide
000279 NM–85–0006	Pounce 3.2 EC Insecticide
012455 NM–89–0001	Quintox Rat and Mouse Bait
010182 NM–94–0003	Cyclone Herbicide
010182 NM–95–0003	Cyclone Concentrate Herbicide
012455 NM–99–0005	Quintox Rat and Mouse Bait
000432 NV–88–0004	Pyraperm 455 Dust
010707 NV–93–0006	Magnacide H Herbicide
005481 NV–94–0004	Dibrom 8 Emulsive
010163 NV–97–0002	Savey Ovicide/Miticide 50-WP
010163 NV–99–0010	Supracide 25W
056576 NY–01–0001	Copper Sulfate Crystals
001812 NY–94–0005	Medium Crystals Copper Sulfate
001812 NY–96–0002	Tennessee Brand Copper Sulfate Crystal
004581 NY–98–0001	Aquathol Granular Aquatic Herbicide
000100 NY–99–0004	Vangard WG Fungicide
000279 OH–00–0001	Command 3ME Microencapsulated Herbicide
000279 OH–00–0002	Command 3ME Microencapsulated Herbicide

TABLE 1.—SECTION 24(C) REGISTRATIONS CANCELED FOR NON-PAYMENT OF MAINTENANCE FEE—Continued

SLN no.	Product Name
000279 OH–00–0003	Command 3ME Microencapsulated Herbicide
000279 OH–01–0001	Aim Herbicide
000279 OH–93–0004	Command 4EC
010163 OH–94–0006	Metasystox-R Spray Concentrate
004581 OH–96–0004	Ziram 76DF Fungicide
059639 OH–97–0006	Orthene Turf, Tree, & Ornamental Spray
000432 OK–82–0006	Permanone Tick Repellent
009779 OK–85–0005	Riverside Atraside 4l
009779 OK–85–0006	Riverside Atrazine 90 Dry Flowable
059639 OK–89–0005	Orthene 75 S Soluble Powder
060063 OK–92–0005	Oxon Italia Atrazine 90 Herbicide
060063 OK–92–0006	IDA, Inc. Atrazine 4L Herbicide
010182 OK–94–0004	Cyclone Herbicide
010182 OK–95–0004	Cyclone Concentrate Herbicide
010163 OR–00–0011	Savey 2E
010182 OR–00–0027	Diquat Herbicide
000241 OR–00–0031	Raptor Herbicide
010182 OR–01–0010	Cyclone Concentrate/ Gramoxone Max
010182 OR–01–0012	Cyclone Concentrate/ Gramoxone Max
007173 OR–78–0018	Rozol Rodenticide Ground Spray Concentrate
003125 OR–78–0024	Mesurol 50% Hopper - Box Treater
002935 OR–81–0073	Wilbur-Ellis Malathion 8 Spray
012455 OR–85–0038	Ditrac Rat and Mouse Bait
000432 OR–87–0016	Acclaim 1 EC Herbicide
002935 OR–90–0003	Dupont Karmex DF Herbicide
010163 OR–90–0017	Gowan Diazinon 14G
034704 OR–91–0012	Sprout Nip Emulsifiable Concentrate
002792 OR–91–0021	Deccoquin 305 Concentrate
000241 OR–93–0002	Prowl 3.3 EC Herbicide
010182 OR–93–0009	Gramoxone Extra Herbicide
051161 OR–93–0013	Orthene 75 S Soluble Powder

TABLE 1.—SECTION 24(C) REGISTRATIONS CANCELED FOR NON-PAYMENT OF MAINTENANCE FEE—Continued

SLN no.	Product Name
067752 OR–93–0014	Orthene 75 S Soluble Powder
010182 OR–93–0019	Gramoxone Extra Herbicide
000264 OR–94–0014	Dodine 65W
010163 OR–94–0052	Metasystox-R Spray Concentrate
010163 OR–94–0054	Metasystox-R Spray Concentrate
000279 OR–96–0020	Command 4EC Herbicide
000432 OR–96–0022	Acclaim 1 EC Herbicide
010163 OR–97–0013	Savey Ovicide/miticide 50-WP
010182 OR–98–0009	Quadris Fungicide
071795 OR–98–0018	Clorox
050534 OR–99–0013	Bravo 825
050534 OR–99–0014	Bravo 825
000241 OR–99–0016	Raptor Herbicide
050534 OR–99–0019	Bravo 720
050534 OR–99–0020	Bravo 720
050534 OR–99–0021	Bravo 720
050534 OR–99–0025	Bravo 825
050534 OR–99–0026	Bravo 720
000524 OR–99–0047	MON-65005 Herbicide
000524 OR–99–0048	MON-65005 Herbicide
010163 OR–99–0053	Supracide 25W
000279 PA–89–0005	Command 4EC
000279 PA–93–0001	Command 4EC
000400 PA–95–0009	Dimilin 4L for Use on Forests
004581 PA–96–0003	Ziram 76DF Fungicide
000279 PA–98–0002	Command 4EC Herbicide
000100 PR–93–0001	Tilt 250 EC
011649 PR–96–0002	Avitrol Powder Mix
073545 SC–79–0033	Topsin-M 70 W
000279 SC–93–0002	Command 4EC
000279 SC–95–0008	Ammo 2.5 EC Insecticide
059639 SC–98–0005	Select Herbicide
054555 SC–99–0001	Dormex
010163 SC–99–0005	Imidan 70-WP Agricultural Insecticide
000264 SC–99–0007	Hoelon 3EC Herbicide
050534 SD–00–0006	Bravo Weather Stik ZN
050534 SD–00–0008	Bravo ZN
000279 SD–01–0004	Aim Herbicide
010182 SD–99–0003	Bravo 720
003125 TN–89–0007	Monitor 4

TABLE 1.—SECTION 24(C) REGISTRATIONS CANCELED FOR NON-PAYMENT OF MAINTENANCE FEE—Continued

SLN no.	Product Name
000279 TN–93–0009	Command 4EC
054555 TX–00–0001	Dormex
003125 TX–00–0010	Admire 2 Flowable
010182 TX–01–0004	Cyclone Concentrate/ Gramoxone Max
004581 TX–78–0045	Aquathol Granular
000100 TX–83–0016	D.Z.N. Diazinon AG 500
000352 TX–88–0007	Dupont Asana XL Insecticide
060063 TX–92–0001	Oxon Italia Atrazine 90 Herbicide
060063 TX–92–0002	Ida, Inc. Atrazine 4L Herbicide
009779 TX–94–0014	Terranil 6l
010182 TX–96–0008	Gramoxone Extra Herbicide
004581 TX–99–0003	Aquathol Granular Aquatic Herbicide
000279 UT–00–0008	Capture 2 EC Insecticide/ Miticide
000279 UT–00–0009	Furadan 4F Insecticide/ Nematicide
000432 UT–01–0001	Permanone Insecticide Concentrate.
000432 UT–01–0002	Aqua-Permanone
007173 UT–77–0001	Rozol Paraffinized Pellets
007173 UT–78–0006	Rozol Rodenticide Ground Spray Concentrate
009779 UT–93–0001	Dimate 4E
010707 UT–93–0004	Magnacide H Herbicide
010182 UT–96–0003	Gramoxone Extra Herbicide
000279 UT–96–0005	Capture 2 EC Insecticide/ Miticide
000279 VA–00–0001	Command 4EC Herbicide
000279 VA–89–0001	Command 4EC
000279 VA–89–0002	Command 4EC
000279 VA–93–0003	Command 4EC
000279 VA–93–0004	Command 4EC
000279 VA–93–0009	Command 4EC
063569 VA–94–0011	Epco-Tek 2000
000279 VA–96–0004	Command 4EC Herbicide
000279 VA–96–0006	Command 4EC Herbicide
056576 VT–01–0001	Copper Sulfate Crystals
000100 VT–90–0001	D.Z.N. Diazinon AG 500
001812 VT–94–0002	Granular Crystals Copper Sulfate
050534 VT–96–0001	Bravo 720

TABLE 1.—SECTION 24(C) REGISTRATIONS CANCELED FOR NON-PAYMENT OF MAINTENANCE FEE—Continued

SLN no.	Product Name
050534 WA–00–0013	Daconil SDG
050534 WA–00–0025	Bravo 720
050534 WA–00–0026	Bravo 825__Agricultural Fungicide
010182 WA–00–0032	Gramoxone Extra Herbicide
010182 WA–01–0008	Cyclone Concentrate/ Gramoxone Max
010182 WA–01–0012	Cyclone Concentrate/ Gramoxone Max
007173 WA–78–0060	Rozol Rodenticide Ground Spray Concentrate
010707 WA–87–0018	Magnacide H Herbicide
009779 WA–87–0022	Dimethoate 4E
009779 WA–88–0014	Riverside Dimate 2.67
005481 WA–89–0019	Dibrom 8 Emulsive
009779 WA–92–0005	Phorate 20-G
010182 WA–93–0014	Gramoxone Extra Herbicide
010163 WA–95–0005	Metasystox-R Spray Concentrate
002792 WA–95–0039	Deccoquin 305 Concentrate
069880 WA–96–0011	Ro-Neet 6-E Selective Herbicide
000279 WA–96–0016	Command 4EC Herbicide
050534 WA–96–0029	Bravo 720
034704 WA–96–0036	Clean Crop Trifluralin 4EC
009779 WA–97–0019	Dimate 4E
010163 WA–97–0020	Savey Ovicide/miticide 50-WP
009779 WA–97–0031	Dimate 4E
050534 WA–99–0007	Bravo 720
050534 WA–99–0008	Bravo 825
010182 WA–99–0016	Abound Flowable Fungicide
000524 WA–99–0029	MON-65005 Herbicide
010163 WA–99–0030	Supracide 25W
000524 WA–99–0031	MON-65005 Herbicide
050534 WI–00–0001	Bravo 720
050534 WI–00–0004	Bravo Weather Stik ZN
000279 WI–01–0002	Command 4EC Herbicide
066222 WI–01–0003	Galigan 2E
009779 WI–91–0006	Phorate 20-G
000279 WI–92–0006	Command 4EC
000279 WI–96–0002	Command 4EC Herbicide
050534 WI–96–0003	Bravo 720

TABLE 1.—SECTION 24(C) REGISTRATIONS CANCELED FOR NON-PAYMENT OF MAINTENANCE FEE—Continued

SLN no.	Product Name
050534 WI–96–0004	Bravo ZN
000279 WI–97–0001	Command 4EC Herbicide
000279 WI–99–0006	Command 4EC Herbicide
003125 WI–99–0010	Admire 2 Flowable
007173 WV–77–0003	Rodenticide Ground Spray Concentrate
012455 WV–82–0005	Ditrac Rat and Mouse Bait
003125 WV–93–0002	Tempo 2 Ornamental Insecticide
010182 WY–00–0001	Gramoxone Extra Herbicide
010163 WY–00–0002	Supracide 25W
010163 WY–00–0004	Savey Ovicide/Miticide 50-WP
000432 WY–01–0002	Aqua-Permanone
010707 WY–93–0003	Magnacide H Herbicide
003125 WY–95–0003	Sencor Df 75% Dry Flowable Herbicide
010163 WY–97–0002	Gowan Endosulfan 3EC
059639 WY–98–0004	Dibrom 8 Emulsive

The following Table 2 lists all of the section 3 registrations which were canceled for non-payment of the 2002 maintenance fees.

TABLE 2.—SECTION 3 REGISTRATIONS CANCELED FOR NON-PAYMENT OF MAINTENANCE FEE

Registration no.	Product Name
000052–00208	Germ Warfare Concentrated Detergent Germicide
000087–00009	Penngas Sterilizing Gas
000087–00011	Penngas 2
000100–00928	Bicep Magnum TR Herbicide
000100–00956	Prosulfuron + Atrazine Herbicide
000100–01094	Dynasty Herbicide
000106–00078	Broadspec 128
000193–00004	Wonder Bleach
000193–00016	Wonder Chlor
000193–00017	Jewel Bleach
000193–00018	Wonder Fresh Scent Bleach
000264–00630	Folistar 50WP
000270–00320	Bendiocarb 2.5 Insecticide Granules
000275–00078	Receptal Saf-Gard Liner System with Germicide
000279–03222	Methyl Parathion 2 Thiodan 3 EC
000283–00004	Neo Solu-Styril No. 5 Aqueous Germicidal Solution

TABLE 2.—SECTION 3 REGISTRATIONS CANCELED FOR NON-PAYMENT OF MAINTENANCE FEE—Continued

Registration no.	Product Name
000303–00063	Huntington Hi-Sine
000303–00108	H6-29l Sanitizer-Cleaner
000303–00116	Hunto-Pine
000303–00219	Firing Squad UlV Spray Insecticide
000303–00222	TOR II
000322–00007	Fort Brand Gopher Bait
000323–00025	N-Dit Concentrate
000323–00056	N-Dit 3
000323–00064	Holcomb Surface Cleaner and Disinfectant
000334–00566	Hytime Metered Aerosol Insecticide
000334–00567	HBII Wasp &Hornet Killer
000335–00178	Chlorine
000432–00547	Crossfire SBP-1382 3% Multipurpose Spray
000432–00554	Pramex Insecticide Emulsifiable Concentrate 13.3% Formu
000432–00711	Perimeter 57% MF
000432–00731	Dethmor Manufacturing - Use Product
000432–00815	Talex Manufacturing Use Product
000432–00902	Lawn Fungicide Granules
000432–00908	Ford's 50% Malathion Emulsifiable Concentrate
000432–00909	Ford's Malathion 57%
000432–00922	Ford's Pyricide Horse Spray
000432–00944	Ficam ULV Solution
000432–00970	Pyretox No. 100 D Insecticide
000432–00990	Pyrenone Grain Protectant
000432–01037	Pyrenone Flexi-Dust
000432–01049	Dairy Spray Concentrate
000432–01066	A-PB Food Plant Fogging Spray
000432–01075	Alleviate Equine Insecticide E.C.
000432–01109	Perma-Vape
000432–01126	Secure Insecticide
000432–01131	Turbocide Pest Control System with DDVP
000432–01206	GA6 - Weed &Grass Killer Ready-To-Use
000491–00217	Super Se-Fly-Go
000491–00263	DRB-SP
000498–00087	Chase-Mm Patio Patrol Outdoor Insect Fogger
000498–00144	Spray Pak Flying and Crawling Insect Killer Formula 2
000506–00184	TAT Residual Roach &Ant Killer
000524–00124	Avadex BW Selective Herbicide

TABLE 2.—SECTION 3 REGISTRATIONS CANCELED FOR NON-PAYMENT OF MAINTENANCE FEE—Continued

Registration no.	Product Name
000524–00291	Granular Avadex BW Herbicide
000538–00087	Scotts Turf Builder with Halts
000538–00128	Scotts Vegetable Garden Weed Preventer
000538–00235	Flower and Garden Weed Preventer
000541–00168	Galahad Neutral Detergent-Germicide Hospital Grade
000541–00265	Puritan #6790 Detergent-Germicide
000550–00193	Liquichlor 10.0%
000550–00196	Vanchlor Sanitizer 5.25%
000550–20001	Liquichlor 12 1/2%
000655–00019	Prentox Warfarin Concentrate Rax Powder
000655–00457	Prentox Diazinon 4E Insecticide
000655–00519	Prentox Liquid Household Spray #1
000662–00073	GDA 50
000662–00074	Sepacide 25
000662–00075	Protectol GA 50
000675–00046	New O-Syl Disinfectant - Detergent
000773–00046	K.F.L. Insecticide-Shampoo
000773–00052	Weladol Disinfectant
000773–00058	Expar 3.2% EC
000773–00061	Expar Cream Rinse for Dogs and Cats
000773–00064	Ectiban Wp Insecticide
000833–00071	Vigilquat
000862–00027	Sunspray 8B
000862–00030	Sunspray 12N
000961–00343	Lebanon Granular 1.5% Oftanol Insecticide
000961–00351	Lebanon Lawn Food with Oftanol Insect Control
001015–00034	Douglas HI-PO ''22'' Ready To Use Fortified Multi-Purpose
001015–00071	Vaporooter
001317–00074	Fly Du
001317–00080	Du-Clor Swimming Pool Chlorine
001327–00038	Fulex Dithio Insecticidal Smoke
001459–00075	Wintermint Disinfectant, Cleaner, Deodorant
001475–00030	ENOZ Delicately Scented Bouquet-Aire Hang-Up Cakes
001475–00090	ENOZ Cedar Tree
001475–00142	Moth-Tek Paper Covered Moth Ball Hangers
001475–00148	Bacta Clean Sanitizer Tablets

TABLE 2.—SECTION 3 REGISTRATIONS CANCELED FOR NON-PAYMENT OF MAINTENANCE FEE—Continued

Registration no.	Product Name
001475–00149	Paradise Cedar Scented Cedar Block
001475–00152	Click Moth Balls
001475–00153	Click 4 Moth &Mildew Discs
001475–00154	Click Solid Air Deodorizer and Bacteriostat for Urinal
001475–00155	Click Para Nuggets
001574–00031	First Mate Disinfectant Cleaner
001574–00034	Enda-Bug Insecticide III.
001677–00131	KX-6034-A
001677–00137	Sta-Chlor
001677–00147	BK LFI Germicide-Sanitizer
001677–00165	Enviro San II
001677–00168	Monarch Low-Foam Iodophor Germicidal Detergent
001677–00171	Monoklor Liquid
001677–00172	Advantage
001677–00173	Monarch CL-14
001677–00174	Monarch Bac'cide
001677–00175	CLX
001677–00176	SANEZE
001677–00178	Monarch Iodine Concentrate
001677–00179	Phos-Enquat
001677–00180	Enquat
001677–00181	Monarch - Ful- Chlor
001677–00182	Monoklor
001677–00184	KX-6078
001706–00042	Nalcon 248
001706–00180	Nalcon 7638
001706–00203	Tektamer 38 O.F.
001706–00204	Calgon PB-15l Papermill Slimicide
001706–00210	H-3130 M Municipal Water Treatment
002011–00007	Vigortone Bovotone FC ''008'' with Rabon Oral Larvicide
002382–00123	Ecto-Soothe Permethrin Shampoo for Dogs
002382–00139	Amitraz Tick Collar for Dogs
002382–00140	Permethrin-IGR #2 Flea and Tick Spray for Dogs
002382–00153	Knockout Room and Area Fogger #1
002382–00154	Flypel II
002382–00168	Diazion-Pyriproxyfen Collar for Dogs and Puppies #1
002382–00171	Diazion-Pyriproxyfen Collar for Dogs and Puppies #3
002382–00172	Diazion-Pyriproxyfen Collar for Dogs and Puppies #2
002439–20003	Sodium Hypochlorite Solution

TABLE 2.—SECTION 3 REGISTRATIONS CANCELED FOR NON-PAYMENT OF MAINTENANCE FEE—Continued

Registration no.	Product Name
002568–00092	Coastal Super Service Anti-Fouling 59-R-7 Red
002568–00097	Vinyl Anti-Fouling V59R25 Red
002568–00098	Sea Prince Antifouling Red 60a3000 Red
002792–00041	Pennwalt Decco 273 Aerosol Potato Sprout Inhibitor
002881–00068	Miraquat II
003008–00053	ADZ-Pad
003095–00061	Pic Room Fogger III
003134–00028	Evsco Theradex A Shampoo for Veterinary Use Only
003240–00009	Technical Grade Pival
003240–00010	Technical Grade Pivalyn
003573–00059	Cleaning Magic I
003862–00002	Insecticide No. 111
003862–00047	Malathion-50 Spray
003862–00049	LEM-O-DIS 27-42
003862–00051	O-DIS 27-42
003862–00065	Bromokil 2.0 Weed Killer
003862–00074	Lemon 7
003862–00079	Insect Death Mist
003862–00081	Destroyer
003862–00084	Easy Does It
003862–00090	Quick Kill Ready To Use Weed Killer
003862–00094	ABC Neutral Disinfectant
003862–00098	Chemscope Insecticide 150
003862–00113	Insect 3000
003862–00114	Dog Shampoo
003862–00118	Di-Elec Wasp &Hornet Spray
003862–00120	Acid Disenfectant Bowl Cleaner
004000–00069	Emulsol Disinfectant Bowl Cleaner
004170–00084	Bac Gard
004787–00024	Malathion Technical
004925–00003	Special King Mosquito Repellent Coil
004972–00063	Protexall Lice Killer (Alternate Formula)
005011–00004	Formula F-5
005011–00071	Formula MU-17
005202–00006	Agri-Fresh
005202–00017	Britex 360 F Apple Wax.
005481–00284	Thuricide HP-90M Dust
005481–00293	Royal Brand Thuricide Hp Cornmeal Bait
005481–00302	Royal Brand Dipel 150 Dust

TABLE 2.—SECTION 3 REGISTRATIONS CANCELED FOR NON-PAYMENT OF MAINTENANCE FEE—Continued

Registration no.	Product Name
005481–00303	Royal Brand Dipel 150 Cornmeal Bait
005481–00304	Royal Brand Dipel 110 Dust
005481–00313	5% Rotenone Fish Toxicant
005535–00074	Gro-Well No-Gro Weed and Grass Killer
005568–00185	Sodium Hypochlorite Solution
005602–00097	Di-Tox E
005602–00151	Di-Tox Plus
005602–00178	Virchem Seventy-Six Insecticide
005602–00201	Hub States Corporation/V-73
006035–00047	Vinco Formaldehyde Solution
006175–00020	Flea Sheen II Shampoo
006175–00024	Flea Sheen Concentrate
006175–00032	Aqua-Kill Forte
006175–00033	Aqua-Kill Flea &Tick Spray
006175–00045	Horse Spray &Rub
006175–00061	Ami Flea &Tick Spray #1
006175–00062	Ami Flea and Tick Dip for Dogs #2
006175–00065	Defend Insecticide for Dogs
006325–00016	Yellow Jacket Fluid Sulfur 70 Sd
006325–00018	Yellow Jacket Sulfur 80 Df
006390–00009	Vikol RG
006409–00014	Professional Do It Yourself Exterminator's Kit Formula
006718–00020	Quick Killing Bug Spray
006718–00021	Amway Fast-Acting Bowl Cleaner II
007001–00344	Sodium Chlorate 5lb Concentrate
007001–00373	Sochlor 6
007405–00034	Chemi-Cap Bamboo Air Sanitizer
007501–00098	Gustafson 2% Reldan Dust Insecticide
007616–00004	Shock
007809–00004	Dial-A-Therm Germicide
008119–00010	Deadline Force, Meal
008176–00024	Hvc 5.25% Sodium Hypochlorite
008176–20001	Hi-Test Sodium Hypochlorite
008176–20005	Premier No. 144 Microbiocide
008329–00058	Abate 2-CG Insecticide
008329–00059	Abate 5-G Insecticide
008540–00015	Garratt-Callahan Formula 34-A
008591–00045	Stabrex St30
008591–00046	N-136b
008616–00007	Iodex

TABLE 2.—SECTION 3 REGISTRATIONS CANCELED FOR NON-PAYMENT OF MAINTENANCE FEE—Continued

Registration no.	Product Name
008660–00053	25% Lindane Wettable Powder
008660–00085	Green Up Kerb 50w
008660–00129	Pursell Metam Sodium
008764–00009	Freshgard 20
008842–00004	Pynamin Forte 120 Mosquito and Fly Vape Mat
008873–20004	Kleen Brite Bleach
009198–00160	The Anderson's 7.5% Chloroneb Turf Fungicide
009386–00025	DMTT-24
009488–00001	Chlorine Liquefied (under Pressure)
009488–20002	Sodium Hypochlorite Solution
009591–00166	Insecticide 110
009616–00009	Vertex Css-10
009634–00002	Clorosol Chlorinating Solution
009688–00118	Chemsico Granules Formula B
009779–00362	Riverside Methyl Parathion 4
009852–00070	No-Chlor Wasp and Hornet Killer
010107–00010	Micro - Gro Cythion Premium Grade Malathion E-5
010107–00036	6% Malathion Grain Protector
010145–00007	Vita-San WS
010352–00047	Stabilene Fly Repellent
010404–00010	Lesco Thiram 75W
010404–00092	Agway Lawn Shield Crabgrass Killer with Tupersan
010631–00002	Angel City House Plant Insect Spray
010634–00002	Alpha San 100
010634–00003	Alpha San 200
010951–00012	Britz Wettable or Dusting Sulfur
011204–00003	Greenall Pro-Formula Weed Control and Lawn Fertilizer 2
011364–00005	Angus Hot Rod
011399–00001	Quaternary Germicidal Cleaner UL-709
011399–00003	UL-530 Heavy Duty Cleaner and Disinfectant
011525–00014	Bathroom Cleaner
011525–00074	P/P Disinfectant, Degreaser and Cleaner
011529–00002	BAF-10
011556–00058	Fleatol Shampoo
011773–00018	De-Bug-1 Bait for Grasshoppers
013208–20001	White House Pool Chlorine
013648–00009	Glidclean 80/60 Pine Oil Disinfectant

TABLE 2.—SECTION 3 REGISTRATIONS CANCELED FOR NON-PAYMENT OF MAINTENANCE FEE—Continued

Registration no.	Product Name
013648–00020	Glidclean 20/80 20% Pine Type Disinfectant
013926–00006	Diaciclon F-5
017705–00002	Pathmark Fresh Scent Bleach
018184–00007	Sultan Germicide
019713–00118	Methoxychlor 4L Insecticide
026884–00001	Bonco Algaecide-Slimicide No. 15
028293–00256	Dursban Roach &Ant Bait
028293–00266	Dursban Plus Resmethrin Concentrate
030574–00007	Tri-Tox 55% Tablets
030574–00008	Tri-Tox 55% Pellets
032802–00023	Stop Grub Plus W/ 20-3-5 Fertilizer
032802–00025	Stop Grub Insecticide Granules
032802–00032	Systemic Rose &Flower Care
033560–00044	Staa - Free 2 + 2 Granular Weed Killer
033753–00001	Myacide Pharma BP
033753–00011	Myacide Bt
033753–00019	Myacide Bt30
033753–00024	Myacide GDA
033912–00001	Wagnol 40 Pest Control Spray Concentrate contains Diazi
034277–00001	Chlorine
034277–00002	Sodium Hypochlorite Solution
034750–20004	Sodium Hypochlorite 5
034871–00005	Chemicide 965
035512–00041	Weed &Feed "s" 32-3-8
035512–00042	Weed &Feed for St. Augustine Grass
035896–00004	Basic Copper TS-53
035896–00007	Copper Pride
035896–00009	Basic Copper Sulfate
036029–00015	Milo Bait for Pocket Gophers
036272–00020	Mystic Flea Spray
036488–00037	Ringer (Safer) Wasp &Hornet Attack RTU.
037655–00003	Tropi-Clear Slow Dissolving 3″ Wrapped Tabs
037655–00004	Tropi-Clear Black Algae Destroyer
037831–00009	Cu2o Antifouling Marine Paint FR-4800
037910–00002	Hi-Lite 60P
037910–00003	Hi-Lite 90p Powder
038110–00008	Green Grass M-14 with Rabon Oral Larvicide

TABLE 2.—SECTION 3 REGISTRATIONS CANCELED FOR NON-PAYMENT OF MAINTENANCE FEE—Continued

Registration no.	Product Name
038797–00001	Nu-Clear Pool Chlorination Solution
039039–00005	Dryzon Wp Livestock Premise &Sheep Insecticide
039260–00001	M-44 Cyanide Capsules
039444–00007	Micropur Mt 5
040572–00001	Carrollchlor
040800–20001	Sodium Hypochlorite Solution
040841–00003	Microbiocide W-15
041014–00003	Marlate Garden Insecticide 5% Dust
041014–00012	Marlate 70% Methoxychlor Dust Base
041134–00004	Tica Granular
041134–00005	SDIC Granular
041391–00001	Sanitizer
042273–00001	Mercury Exterior-Ready Mixed Penetrating Oil Stain
042506–00004	Pine Fresh Household Cleaner
042697–00006	Safer Flea Soap for Cats and Dogs
042697–00040	Safer Brand Ant, Roach &Spider Killer I
042697–00051	Safer Brand Weed-Away Lawn Weed Killer Ready To Use
042697–00052	Safer Brand Weed-Away Lawn Weed Killer Concentrate
042697–00053	EH 1357 Herbicide
042697–00054	Delta S Rtu Insecticide
042697–00056	Ant Killer Granules
042697–00057	Deltamethrin Insect Control Dust
042964–00003	Entacide
043410–00027	ACI Sanitizer 405-R
043521–00003	Super Swim Brite 62
043602–00017	Kleer Tower X300 Cooling Tower Algaecide
043843–00003	Chlorine Liquified Gas Under Pressure
044446–00011	Quik-Kill Fly &Mosquito Spray
044446–00063	Remote Total Release Fogger
044786–00001	ABL 16
045600–00011	Insecta Perimeter Spray
045973–00001	Al-Chlor 150
045987–00006	Rodspray Mosquito Larvicide
046196–00001	Roach and Ant Killer
046579–00005	Pyra - Fog 3 Contact and Space Spray
046830–00001	Palene 586B
048273–00013	Pestban 2E
048273–00019	Pestban 4E

TABLE 2.—SECTION 3 REGISTRATIONS CANCELED FOR NON-PAYMENT OF MAINTENANCE FEE—Continued

Registration no.	Product Name
048301–00016	Bodoxin
049407–00001	Rescue! Dog &Cat Repellent
049517–00002	Poly-Foliant III Defoliant-Dessicant
049668–00007	Redball Lightning Degradable Sulfur
049720–00001	Sccchlor Liquefied Chlorine
050039–00002	Abuse-A-Bug
050221–00001	Liquefied Chlorine Gas Under Pressure
050400–00001	Liquefied Chlorine Gas Under Pressure
050414–00002	Tomlyn Daily Protection
050414–00004	Tomyln Flea, Tick and Lice Shampoo
050414–00005	Tomlyn Flea, Tick &Lice Shampoo
050534–00004	Daconil 2787 W75
050534–00023	Bravo W-75 Agricultural Fungicide
050534–00106	Kacodil
050534–00107	Pickall
050534–00117	Tuffcide 960s
050534–00218	Tuffcide Ultrex ADG
050534–00224	Tuffcide Xtra
050654–00002	Insekten Killer
050654–00004	Insectkiller Cockroach Carpet
050675–00005	PB-Rope
051219–00005	CWT-BB100
051517–00007	Gargoil
051699–00001	C-H Formula #9 Bug Killer
051699–00002	Formula No. 15 Bug Killer
052287–00002	Harrell's Ronstar 1.5 with Fertilizer
052287–00004	Oftanol 660 with Plant Food
052287–00005	0.40% Chlorpyrifos Plus Fertilizer
053356–00002	D-Bug-75
053824–00002	P-7 Grain Preservative
053883–00058	Martin's Diazinon 4e Indoor-Outdoor Insecticide
054045–00001	Zebra Mosquito Coils
054679–00003	Custom Chlor 200
054705–00003	Fungi-Fighter Systemic Fungicide
054998–00003	Tablets
055236–00004	101 Blue 100 Copper Antifouling Paint

TABLE 2.—SECTION 3 REGISTRATIONS CANCELED FOR NON-PAYMENT OF MAINTENANCE FEE—Continued

Registration no.	Product Name
055615–00005	Wilbro Fertilizer with Ronstar
055773–00001	Score Roach Bait
056159–00002	Beaphar Flea and Tick Spray
056159–00003	Beaphar Flea and Tick Shampoo for Dogs (cats)
056159–00005	Durham's Flea, Tick and Lice Dip
056159–00006	Durham's General Purpose Insecticide
056212–00002	Dmx-7 Plus Lecithin
056572–00003	Liquid Chlor
056637–00001	Trap-n-a-Sak
056637–00003	Trap-n-a-Sak Bar Bait Kills Rats and Mice
056637–00004	Trap-n-a-Sak II Kills Rats and Mice
056986–00001	Insect Repellent Patio Candle
057538–00007	Top Cop Tri-Basic Flowable Fungicide/Bactericide
057787–00013	Combat
057966–00001	Chlorine
058199–00006	Jump Plant Regulator
058401–00012	Stellar One Inch Tablet
058401–00014	Stellar 90 Granular
058501–00001	Confront Weed Stick
058841–00001	Mosquito Shield
059732–00001	Liquified Chlorine Gas Under Pressure
059790–00001	El Matador
061219–20001	Sodium Hypochlorite
061602–00001	Laroche Chlorine
061616–00001	Liquified Chlorine Gas Under Pressure
061842–00001	Or-Cal Sectagon II
061842–00002	Sectagon
061842–00003	Pole Life
061842–00005	Or-Cal Metam-S.A.U.
062012–00001	Mr. Christal's Kills Fleas
062563–00002	Blue Ridge Bleach
062563–00003	Time Saver Bleach
062563–00005	Linco Bleach
062563–00006	SX-3 Liquid Bactericide
062719–00230	Grandstand
063015–00001	Liquified Chlorine Gas Under Pressure
063281–00003	Povidone Iodine, USP Solution
063281–00004	MTR Phenolic Germicidal Cleaner

TABLE 2.—SECTION 3 REGISTRATIONS CANCELED FOR NON-PAYMENT OF MAINTENANCE FEE—Continued

Registration no.	Product Name
063281–00009	BC II Phenolic
063569–00001	Epco-Tek 2000
063823–00035	Stick-Up Roach Trap
064005–00004	Itek-5 Water Purification Resin
064350–00002	W-60-3
064439–00002	Gopher-Med
064864–00037	Last-Bite Snail and Slug Killer Meal
064864–00044	Thiabendazole Citrus Fungicide Concentrate
064864–00049	Pacrite Clean San
065560–00001	Chlorine
065560–00003	Sodium Hypochlorite 10%
065560–20001	Sodium Hypochlorite 12.5%
065897–00001	Swepr Klorpik-Sr Fume
065987–00002	911 Home Exterminator
066301–00001	UBIX Animal Wash or Spray
066352–00002	Garlic Barrier AG
066736–00001	Ciba Seeds B. Thuringiensis S. K. European Corn Borer C
067003–00021	Calcium Hypochlorite Granular
067003–00022	Calcium Hypochlorite
067066–00001	EFFAC
067279–00001	Sodium Hypochlorite Solution
067279–00002	Chemply Chlorine Liquified Gas Under Pressure
067425–00001	Ant &Roach Killer
067425–00003	Ecopco G Granular Insecticide
067425–00006	Eco Safe(tm) Broad Spectrum Insecticide
067425–00012	Ecopco EC Emulsifiable Concentrate
067544–20001	Spar Chlor
067553–00001	Liquified Chlorine Gas Under Pressure
067572–00003	R &M Permethrin 10% E.C.
067572–00004	R &M Aqueous Residual Flea &Tick Spray #3
067572–00006	R &M Flea &Tick Spray #11
067572–00007	R &M Flea and Tick Shampoo #11
067572–00015	R &M Aqueous Flea &Tick Spray #13
067572–00018	R &M Aqueous Residual Flea &Tick Spray #1
067572–00019	R &M Hamster &Gerbil Spray
067572–00021	R &M Flea &Tick Shampoo #15
067572–00022	R &M Flea &Tick Shampoo #16
067572–00029	R &M Flea &Tick Spray #12

TABLE 2.—SECTION 3 REGISTRATIONS CANCELED FOR NON-PAYMENT OF MAINTENANCE FEE—Continued

Registration no.	Product Name
067572–00033	R &M Flea and Tick Dip #11
067572–00034	R &M Flea and Tick Dip #12
067572–00056	CP Snail &Bug Bait
067572–00057	CP Cage and Aviary Spray
067760–00037	Parathion 4 EC.
067959–00001	Trifluralin Technical
068150–00001	Maltchlor
068329–00020	Alpha 416
068338–00003	Sodium Hypochlorite 16%
068338–00006	North Bright Bleach
068543–00007	Bengal Roach &Ant Spray
068543–00011	Bengal Water-Based Wasp &Hornet Killer
068826–00001	Cal Crop USA Envirepel
068826–00002	Cal Crop USA Nutripel
069217–00001	Prevent
069421–00102	Irrigate
069607–00001	Double Duty Flea &Tick Collar for Dogs
069735–20001	Wilclor - 2
069897–00001	Microfree Brand B 507
069897–00002	Microfree Brand B 240
069900–00001	Outsmart
069979–00001	Acid-Anionic Sanitizer Cleaner
070051–00008	Neemguard
070051–00024	Azatin Technical
070051–00050	Able Biological Insecticide
070051–00058	Thuricide - 64LV Plus
070051–00059	Thuricide 64 LV
070051–00071	Teknar Hp-B Larvicide
070126–00002	Organic Resources Crawling Insect Killer
070271–00005	Sparkle Brite
070271–00006	Lasso Pine Aroma Disinfectant
070271–00007	Pure Bright Institutional Sanitizer
070271–00009	Pure Bright Industrial Sanitizer/disinfectant
070271–00011	Pure Bright Liquid Chlorinator
070271–00014	Clo White Bleach
070395–00001	Gone Insect Repelling Wristband
070810–00002	Auxigro Manufacturing Use Product
070810–00007	Corngard
070810–00009	Mycotrol 22WP
070907–00002	Regatta 4E Chlorpyrifos Professional Insecticide
070907–00009	Regatta 50W Chlorpyrifos Professionalinsecticide

TABLE 2.—SECTION 3 REGISTRATIONS CANCELED FOR NON-PAYMENT OF MAINTENANCE FEE—Continued

Registration no.	Product Name
071207–00001	Chlorine Liquified Gas Under Pressure
071207–20001	Sodium Hypochlorite Solution (end-Use Product)
071207–20007	Sodium Hypochlorite Solution (manufacturing Use)
071227–00002	Zeomic Type AJ10N Silver Zeolite A
071227–00003	Zeomic Type AJ10N Silver Zeolite A
071683–00001	Exile Herbicide Technical
071711–00009	Flutolanil Technical
071711–00010	Moncut 50WP
071711–00011	Moncut 50WP
071711–00012	Moncut 70WP (for Use on Rice)
071768–00001	Bear Pause Attack Deterrent
071817–00001	Brightwater Disinfectant
071829–00001	One Drop Anti-Flea and Tick Treatment
071946–00001	Sharp-Shield
072025–00001	Registered Rabbit Repellent
072190–00001	5-Chloro-2-(2,4-Dichlorophenoxy)phenol Polymer Additive
072437–00001	Stellar 85 Tabs
072437–00002	Stellar 80 Tabs
072437–00003	Stellar 95 Tabs
072439–00001	IPEX 200
072439–00002	IPEX 1000
072439–00003	IPEX 400
072451–00001	MSTRS ECB
072451–00004	MSTRS BHFW-2
072581–20004	Low Temp Sanitizer
072594–00002	Dyna-Gro Root-Gel
072639–00002	LT Biosyn, Inc. 1-Naphthaleneacetic Acid Technical
072679–00001	Copper Paint No.5 Green
072679–00003	Copper Paint No.3 Red
072738–20001	Sunscape
072738–20002	Patterson West Sunscape
072738–20004	Patterson West Blue Ribbon
073049–00007	Promalin II Plant Growth Regulator Solution
073748–00002	Kattleguard ''plus''
073825–00003	Ecozap Granular Insecticide
073825–00004	Ecozap Carpet Powder
074180–00001	Super IQ Insecticide Coating-APT
074180–00002	Super IQ Insecticide Coating-LC

IV. Public Docket

Complete lists of registrations canceled for non-payment of the maintenance fee will also be available for reference during normal business hours in the OPP Public Docket, Room 119, Crystal Mall #2, 1921 Jefferson Davis Highway South, Arlington VA, and at each EPA Regional Office. Product–specific status inquiries may be made by telephone by calling toll-free 1–800–444–7255.

List of Subjects

Environmental protection, Fees.

Dated: July 25, 2002.

Marcia E. Mulkey,

Director, Office of Pesticide Programs.

[FR Doc. 02–19982 Filed 8–6–02; 8:45 a.m.]

BILLING CODE 6560–50–S

ENVIRONMENTAL PROTECTION AGENCY

[OPP–2002–0166; FRL–7190–4]

Notice of Filing a Pesticide Petition to Establish a Tolerance for a Certain Pesticide Chemical in or on Food

AGENCY: Environmental Protection Agency (EPA).

ACTION: Notice.

SUMMARY: This notice announces the initial filing of a pesticide petition proposing the establishment of regulations for residues of a certain pesticide chemical in or on various food commodities.

DATES: Comments, identified by docket ID number OPP–2002–0166, must be received on or before September 6, 2002.

ADDRESSES: Comments may be submitted by mail, electronically, or in person. Please follow the detailed instructions for each method as provided in Unit I.C. of the **SUPPLEMENTARY INFORMATION.** To ensure proper receipt by EPA, it is imperative that you identify docket ID number OPP–2002–0166 in the subject line on the first page of your response.

FOR FURTHER INFORMATION CONTACT: By mail: Treva Alston, Registration Support Branch, Registration Division (7505C), Office of Pesticide Programs, Environmental Protection Agency, 1200 Pennsylvania Ave., NW., Washington, DC 20460; telephone number: (703) 308–8373; e-mail address: treva.alston@epa.gov.

SUPPLEMENTARY INFORMATION:

I. General Information

A. Does this Action Apply to Me?

You may be affected by this action if you are an agricultural producer, food manufacturer or pesticide manufacturer. Potentially affected categories and entities may include, but are not limited to:

Categories	NAICS codes	Examples of potentially affected entities
Industry	111 112 311 32532	Crop production Animal production Food manufacturing Pesticide manufacturing

This listing is not intended to be exhaustive, but rather provides a guide for readers regarding entities likely to be affected by this action. Other types of entities not listed in the table could also be affected. The North American Industrial Classification System (NAICS) codes have been provided to assist you and others in determining whether or not this action might apply to certain entities. If you have questions regarding the applicability of this action to a particular entity, consult the person listed under **FOR FURTHER INFORMATION CONTACT**.

B. How Can I Get Additional Information, Including Copies of this Document and Other Related Documents?

1. *Electronically.* You may obtain electronic copies of this document, and certain other related documents that might be available electronically, from the EPA Internet Home Page at http://www.epa.gov/. To access this document, on the Home Page select ''Laws and Regulations,'' ''Regulations and Proposed Rules,'' and then look up the entry for this document under the ''**Federal Register**—Environmental Documents.'' You can also go directly to the **Federal Register** listings at: http://www.epa.gov/fedrgstr/.

2. *In person.* The Agency has established an official record for this action under docket ID number OPP–2002–0166. The official record consists of the documents specifically referenced in this action, any public comments received during an applicable comment period, and other information related to this action, including any information claimed as confidential business information (CBI). This official record includes the documents that are physically located in the docket, as well as the documents that are referenced in those documents. The public version of the official record does not include any information claimed as CBI. The public version of the official record, which includes printed, paper versions of any electronic comments submitted during an applicable comment period, is available for inspection in the Public Information and Records Integrity Branch (PIRIB), Rm. 119, Crystal Mall #2, 1921 Jefferson Davis Highway, Arlington, VA, from 8:30 a.m. to 4 p.m., Monday through Friday, excluding legal holidays. The PIRIB telephone number is (703) 305–5805.

C. How and to Whom Do I Submit Comments?

You may submit comments through the mail, in person, or electronically. To ensure proper receipt by EPA, it is imperative that you identify docket ID number OPP–2002-0166 in the subject line on the first page of your response.

1. *By mail.* Submit your comments to: Public Information and Records Integrity Branch (PIRIB), Information Resources and Services Division (7502C), Office of Pesticide Programs (OPP), Environmental Protection Agency, 1200 Pennsylvania Ave., NW., Washington, DC 20460.

2. *In person or by courier.* Deliver your comments to: Public Information and Records Integrity Branch (PIRIB), Information Resources and Services Division (7502C), Office of Pesticide Programs (OPP), Environmental Protection Agency, Rm. 119, Crystal Mall #2, 1921 Jefferson Davis Highway, Arlington, VA. The PIRIB is open from 8:30 a.m. to 4 p.m., Monday through Friday, excluding legal holidays. The PIRIB telephone number is (703) 305–5805.

3. *Electronically.* You may submit your comments electronically by e-mail to: opp-docket@epa.gov, or you can submit a computer disk as described above. Do not submit any information electronically that you consider to be CBI. Avoid the use of special characters and any form of encryption. Electronic submissions will be accepted in Wordperfect 6.1/8.0 or ASCII file format. All comments in electronic form must be identified by docket ID number OPP–2002–0166. Electronic comments may also be filed online at many Federal Depository Libraries.

D. How Should I Handle CBI That I Want to Submit to the Agency?

Do not submit any information electronically that you consider to be CBI. You may claim information that you submit to EPA in response to this document as CBI by marking any part or

all of that information as CBI. Information so marked will not be disclosed except in accordance with procedures set forth in 40 CFR part 2. In addition to one complete version of the comment that includes any information claimed as CBI, a copy of the comment that does not contain the information claimed as CBI must be submitted for inclusion in the public version of the official record. Information not marked confidential will be included in the public version of the official record without prior notice. If you have any questions about CBI or the procedures for claiming CBI, please consult the person identified under **FOR FURTHER INFORMATION CONTACT**.

E. What Should I Consider as I Prepare My Comments for EPA?

You may find the following suggestions helpful for preparing your comments:

1. Explain your views as clearly as possible.
2. Describe any assumptions that you used.
3. Provide copies of any technical information and/or data you used that support your views.
4. If you estimate potential burden or costs, explain how you arrived at the estimate that you provide.
5. Provide specific examples to illustrate your concerns.
6. Make sure to submit your comments by the deadline in this notice.
7. To ensure proper receipt by EPA, be sure to identify the docket ID number assigned to this action in the subject line on the first page of your response. You may also provide the name, date, and **Federal Register** citation.

II. What Action is the Agency Taking?

EPA has received a pesticide petition as follows proposing the establishment and/or amendment of regulations for residues of a certain pesticide chemical in or on various food commodities under section 408 of the Federal Food, Drug, and Cosmetic Act (FFDCA), 21 U.S.C. 346a. EPA has determined that this petition contains data or information regarding the elements set forth in section 408(d)(2); however, EPA has not fully evaluated the sufficiency of the submitted data at this time or whether the data support granting of the petition. Additional data may be needed before EPA rules on the petition.

List of Subjects

Environmental protection, Agricultural commodities, Feed additives, Food additives, Pesticides and pests, Reporting and recordkeeping requirements.

Dated: July 25, 2002.

Peter Caukins,

Acting Director, Registration Division, Office of Pesticide Programs.

Summary of Petition

The petitioner summary of the pesticide petition is printed below as required by section 408(d)(3) of the FFDCA. The summary of the petition was prepared by the petitioner and represents the view of the petitioner. EPA is publishing the petition summary verbatim without editing it in any way. The petition summary announces the availability of a description of the analytical methods available to EPA for the detection and measurement of the pesticide chemical residues or an explanation of why no such method is needed.

Akzo Nobel Surface Chemistry LLC

PP 7E4807

EPA has received a pesticide petition PP 7E4807 from Akzo Nobel Surface Chemistry LLC, 300 South Riverside Plaza, Chicago, IL 60606, proposing, pursuant to section 408(d) of the Federal Food, Drug, and Cosmetic Act (FFDCA), 21 U.S.C. 346a(d), to amend 40 CFR part 180. To establish an exemption from the requirement of a tolerance for [2-ethylhexyl glucopyranoside] to be applied to growing crops only. EPA has determined that the petition contains data or information regarding the elements set forth in section 408(d)(2) of the FFDCA; however, EPA has not fully evaluated the sufficiency of the submitted data at this time or whether the data support granting of the petition. Additional data may be needed before EPA rules on the petition.

A. Residue Chemistry

1. *Plant metabolism.* The plant metabolism of 2-ethylhexyl glucopyranoside has not been investigated. However, due to the structural similarity, the metabolic pathway for 2-ethylhexyl glucopyranoside is expected to be similar to that of other alkyl glucosides which have been previously granted an exemption from the requirement of a tolerance, and also of those alkyl glucosides of similar structure that appear on EPA's current List 4B Inert Ingredient List.

2. *Analytical method.* The inert ingredient, impurities and oligomer distribution can be analyzed using high temperature gas chromatography with cold on column injection after derivatization with silylating reagents. Low levels of the inert ingredient can be detected by HPLC.

3. *Magnitude of residues.* Given the current extensive and widespread use of structurally similar nonionic surfactants in herbicide formulations, the added use of 2-ethylhexyl glucopyranoside will not significantly contribute to the total use-volume of these materials. The expected concentration of 2ethylhexyl glucopyranoside when used in an herbicide formulation will be much lower than the concentration of any co-formulated pesticide active ingredient. Therefore, the comparable application rate, on a grams/acre basis will be significantly lower than that of any co-formulated active ingredient. It is then reasonable to assume that any potential residues resulting from the use of 2-ethylhexyl glucopyranoside in a pesticide formulation would be insignificant.

B. Toxicological Profile

1. *Acute toxicity.* The results of acute toxicity testing for 2-ethylhexyl glucopyranoside are as follows: Acute oral LD_{50} (rat) >2.0 gram/kilogram (g/kg); Acute dermal LD_{50} (rat) >2.38 g/kg; moderate to severe eye irritant (rabbit); non-irritating to skin (rabbit); not a skin sensitizer (guinea pig).

2. *Genotoxicty.* 2-Ethylhexyl glucoside was negative in the Ames test, and did not induce chromosomal aberrations in human lymphocytes cultured *in vivo.*

3. *Reproductive and developmental toxicity.* Although the final report has not yet been issued, the preliminary results from a one-generation reproduction toxicity study with 2-ethylhexyl glucoside administered in male and female Wistar rats are available. The results indicate gavage treatment of male and female Wistar rats with 2-ethylhexyl glucoside at dose levels of 15, 150 or 750 milligram/kilogram (mg/kg) body weight/day during one generation, revealed parental toxicity in animals receiving 750 mg/kg b.w./day. Reproductive parameters and development of the pups were not affected up to 750 mg/kg b.w./day.

Parental toxicity consisted of affected mortality, clinical signs, body weights, and food consumption for animals treated at 750 mg/kg body weight/day.

Based on the results in this one-generation study, the definitive parental no observed adverse effect level (NOAEL) was established as being 150 mg/kg body weight/day. The definitive reproductive and developmental NOAEL was established as being 750 mg/kg body weight/day.

4. *Subchronic toxicity.* A 28-day oral toxicity study in the rat was conducted

on 2-ethylhexyl glucopyranoside. The results were that in the rat, 750 mg/kg/day represents the no-observed-toxic effect level (NOTEL) and 150 mg/kg/day represents the no-observed effect level (NOEL).

5. *Chronic toxicity.* Based on the NOTEL and NOEL results of the 28-day study conducted on 2-ethylhexyl glucopyranoside, there are no chronic health concerns.

6. *Animal metabolism.* Animal metabolism studies have not been conducted on 2-ethylhexyl glucopyranoside. However, structurally similar radiolabeled alkyl glucopyranosides were studied after oral administration to mice. The results indicate that the glycosidic bond was rapidly hydrolyzed in the intestine and liver to sugars and the parent alcohol. The sugars and alcohols then entered the pathways of lipid and carbohydrate metabolism.

7. *Metabolite toxicology.* The metabolites of 2-ethylhexyl glucopyranoside are expected to be the cleavage products at the glycosidic bond, 2-ethylhexanol and glucose. The toxicity of these two metabolites is well known.

8. *Endocrine disruption.* No evidence of endocrine disruption was observed in any of the studies conducted on 2-ethylhexyl glucopyranoside, nor are there any known reports of any estrogenic and adverse effects to human population as a result of the use of 2-ethyhexyl glucopyranoside.

C. Aggregate Exposure

1. *Dietary exposure.* Based on the metabolism study that indicates alkyl glucopyranosides are readily metabolized in the liver and intestine to glucose and the alcohol, exposure to 2-ethylhexyl glucopyranoside should not pose a dietary risk under any foreseeable circumstances to the U.S. population including infants and children.

i. *Food.* Exposures to 2-ethylhexyl glucopyranoside due to ingestion of food is not expected to occur.

ii. *Drinking water.* Exposures to 2-ethylhexyl glucopyranoside due to ingestion of water is not expected to occur.

2. *Non-dietary exposure.* Structurally similar alkyl glucopyranosides are currently being used in a number of institutional and household cleaning applications. These current uses are expected to result in significantly higher exposures than exposure due to the insignificant residue levels resulting from the use under the proposed exemption from the requirement of a tolerance applied to growing crops only.

D. Cumulative Effects.

From the results of the tests conducted on 2-ethylhexyl glucopyranoside, no evidence of any specific target organ toxicity has been produced. Therefore, there is no evidence of a common mechanism of toxicity with any other substance, and there is no reason to expect that the use of 2-ethyhexyl glucopyranoside will contribute to any cumulative toxicity resulting from exposures to other substances having a common mechanism of toxicity.

E. Safety Determination

1. *U.S. population.* The results of the acute, genotoxic, subacute and developmental toxicity studies conducted on 2-ethylhexyl glucopyranoside indicate a relatively low order of toxicity. Structurally similar alkyl glucopyranosides currently exempted from the requirement of a tolerance, also appear on EPA's List 4B Inert List. Therefore, due to the low order of toxicity of 2-ethylhexyl glucopyranoside and the lack of known adverse human health effects associated with this class of chemicals, the exemption from the requirement of a tolerance on growing crops only is not expected to result in any new, or adverse effects to human health or the environment.

2. *Infants and children.* Exposure to 2-ethylhexyl glucopyranosides to infants and children is not expected to occur. The substance will be used as an inert ingredient at low levels on growing crops only, and any residual levels are expected to be insignificant and consistent with structurally similar alkyl glucopyranosides currently exempted from the requirement of a tolerance.

F. International Tolerances

No codex maximum residue levels have been established for 2-ethyhexyl glucopyranoside.

[FR Doc. 02–19805 Filed 8–6–02; 8:45 am]

BILLING CODE 6560–50–S

ENVIRONMENTAL PROTECTION AGENCY

[OPP–2002–0151; FRL–7188–6]

Notice of Filing a Pesticide Petition to Establish a Tolerance for a Certain Pesticide Chemical in or on Food

AGENCY: Environmental Protection Agency (EPA).

ACTION: Notice.

SUMMARY: This notice announces the initial filing of a pesticide petition proposing the establishment of regulations for residues of a certain pesticide chemical in or on various food commodities.

DATES: Comments, identified by docket ID number OPP–2002–0151, must be received on or before September 6, 2002.

ADDRESSES: Comments may be submitted by mail, electronically, or in person. Please follow the detailed instructions for each method as provided in Unit I.C. of the **SUPPLEMENTARY INFORMATION.** To ensure proper receipt by EPA, it is imperative that you identify docket ID number OPP–2002–0151 in the subject line on the first page of your response.

FOR FURTHER INFORMATION CONTACT: By mail: Sidney Jackson, Registration Division (7505C), Office of Pesticide Programs, Environmental Protection Agency, 1200 Pennsylvania Ave., NW., Washington, DC 20460; telephone number: (703) 305–7610; e-mail address: jackson.sidney@epa.gov.

SUPPLEMENTARY INFORMATION:

I. General Information

A. Does this Action Apply to Me?

You may be affected by this action if you are an agricultural producer, food manufacturer or pesticide manufacturer. Potentially affected categories and entities may include, but are not limited to:

Categories	NAICS codes	Examples of potentially affected entities
Industry	111 112 311 32532	Crop production Animal production Food manufacturing Pesticide manufacturing

This listing is not intended to be exhaustive, but rather provides a guide for readers regarding entities likely to be affected by this action. Other types of entities not listed in the table could also be affected. The North American Industrial Classification System (NAICS) codes have been provided to assist you and others in determining whether or not this action might apply to certain entities. If you have questions regarding the applicability of this action to a particular entity, consult the person listed under **FOR FURTHER INFORMATION CONTACT.**

B. How Can I Get Additional Information, Including Copies of this Document and Other Related Documents?

1. *Electronically*. You may obtain electronic copies of this document, and certain other related documents that might be available electronically, from the EPA Internet Home Page at http://www.epa.gov/. To access this document, on the Home Page select ''Laws and Regulations,'' ''Regulations and Proposed Rules,'' and then look up the entry for this document under the ''**Federal Register**—Environmental Documents.'' You can also go directly to the **Federal Register** listings at http://www.epa.gov/fedrgstr/.

2. *In person*. The Agency has established an official record for this actionunder docket ID number OPP–2002–0151. The official record consists of the documents specifically referenced in this action, any public comments received during an applicable comment period, and other information related to this action, including any information claimed as confidential business information (CBI). This official record includes the documents that are physically located in the docket, as well as the documents that are referenced in those documents. The public version of the official record does not include any information claimed as CBI. The public version of the official record, which includes printed, paper versions of any electronic comments submitted during an applicable comment period, is available for inspection in the Public Information and Records Integrity Branch (PIRIB), Rm. 119, Crystal Mall #2, 1921 Jefferson Davis Highway, Arlington, VA, from 8:30 a.m. to 4 p.m., Monday through Friday, excluding legal holidays. The PIRIB telephone number is (703) 305–5805.

C. How and to Whom Do I Submit Comments?

You may submit comments through the mail, in person, or electronically. To ensure proper receipt by EPA, it is imperative that you identify docket ID number OPP–2002–0151 in the subject line on the first page of your response.

1. *By mail*. Submit your comments to: Public Information and Records Integrity Branch (PIRIB), Information Resources and Services Division (7502C), Office of Pesticide Programs (OPP), Environmental Protection Agency, 1200 Pennsylvania Ave., NW., Washington, DC 20460.

2. *In person or by courier*. Deliver your comments to: Public Information and Records Integrity Branch (PIRIB), Information Resources and Services Division (7502C), Office of Pesticide Programs (OPP), Environmental Protection Agency, Rm. 119, Crystal Mall #2, 1921 Jefferson Davis Highway, Arlington, VA. The PIRIB is open from 8:30 a.m. to 4 p.m., Monday through Friday, excluding legal holidays. The PIRIB telephone number is (703) 305–5805.

3. *Electronically*. You may submit your comments electronically by e-mail to: opp-docket@epa.gov, or you can submit a computer disk as described above. Do not submit any information electronically that you consider to be CBI. Avoid the use of special characters and any form of encryption. Electronic submissions will be accepted in Wordperfect 6.1/8.0 or ASCII file format. All comments in electronic form must be identified by docket ID number OPP–2002–0151. Electronic comments may also be filed online at many Federal Depository Libraries.

D. How Should I Handle CBI That I Want to Submit to the Agency?

Do not submit any information electronically that you consider to be CBI. You may claim information that you submit to EPA in response to this document as CBI by marking any part or all of that information as CBI. Information so marked will not be disclosed except in accordance with procedures set forth in 40 CFR part 2. In addition to one complete version of the comment that includes any information claimed as CBI, a copy of the comment that does not contain the information claimed as CBI must be submitted for inclusion in the public version of the official record. Information not marked confidential will be included in the public version of the official record without prior notice. If you have any questions about CBI or the procedures for claiming CBI, please consult the person identified under **FOR FURTHER INFORMATION CONTACT**.

E. What Should I Consider as I Prepare My Comments for EPA?

You may find the following suggestions helpful for preparing your comments:

1. Explain your views as clearly as possible.
2. Describe any assumptions that you used.
3. Provide copies of any technical information and/or data you used that support your views.
4. If you estimate potential burden or costs, explain how you arrived at the estimate that you provide.
5. Provide specific examples to illustrate your concerns.
6. Make sure to submit your comments by the deadline in this notice.
7. To ensure proper receipt by EPA, be sure to identify the docket ID number assigned to this action in the subject line on the first page of your response. You may also provide the name, date, and **Federal Register** citation.

II. What Action is the Agency Taking?

EPA has received a pesticide petition as follows proposing the establishment and/or amendment of regulations for residues of a certain pesticide chemical in or on various food commodities under section 408 of the Federal Food, Drug, and Cosmetic Act (FFDCA), 21 U.S.C. 346a. EPA has determined that this petition contains data or information regarding the elements set forth in section 408(d)(2); however, EPA has not fully evaluated the sufficiency of the submitted data at this time or whether the data support granting of the petition. Additional data may be needed before EPA rules on the petition.

List of Subjects

Environmental protection, Agricultural commodities, Feed additives, Food additives, Pesticides and pests, Reporting and recordkeeping requirements.

Dated: July 25, 2002.

Peter Caulkins,

Acting Director, Registration Division, Office of Pesticide Programs.

Summary of Petition

The petitioner summary of the pesticide petition is printed below as required by section 408(d)(3) of the Federal Food, Drug, and Cosmetic Act (FFDCA). The summary of the petition was prepared by the petitioner and represents the view of the petitioner. EPA is publishing the petition summary verbatim without editing it in any way. The petition summary announces the availability of a description of the analytical methods available to EPA for the detection and measurement of the pesticide chemical residues or an explanation of why no such method is needed.

Interregional Reseaarch Project Number 4

PP 0E6205

Summary of Petitions

EPA has received a pesticide petition (PP 0E6205) from the Interregional Research Project Number 4 (IR-4), Technology Centre of New Jersey, Rutgers, the State University, 681 U. S. Highway #1 South, North Brunswick, NJ 08902 proposing, pursuant to section

408(d) of the FFDCA, 21 U.S.C. 346a(d), to amend 40 CFR 180.300 by establishing a tolerance for residues of ethephon, (2-chloroethyl)phosphonic acid in or on the raw agricultural commodity coffee, bean at 0.5 parts per million (ppm). EPA has determined that the petition contains data or information regarding the elements set forth in section 408(d)(2) of the FFDCA; however, EPA has not fully evaluated the sufficiency of the submitted data at this time or whether the data support granting of the petition. Additional data may be needed before EPA rules on the petition.

This Notice was prepared by Aventis CropScience USA LP, Research Triangle Park, NC 27709.

A. Residue Chemistry

1. *Plant metabolism.* The qualitative nature of the residue in plants is adequately understood based on tomato, cantaloupe, apple, fig, pineapple, tobacco, grape, walnut, filbert, cherry, tangerine and lemon metabolism data. Ethephon degrades to ethylene, phosphate and chloride. Data indicate that proximal and distal translocation of ethephon to fruits may occur following application to leaves. The residue of concern in plants is ethephon.

2. *Analytical method.* Adequate methods for purposes of enforcement of ethephon tolerances in plant commodities, ruminant tissues, and milk are available. The Amchem-Plant Method (PAM, Vol. II, Method I) is the recommended method for enforcement purposes for plant commodities and processed products other than wheat and barley straw. The Amchem-Cereal Method (forwarded to the Food and Drug Administration (FDA) for inclusion in the PAM, Vol. II, Method I) is the recommended method for enforcement purposes for wheat and barley straw. The Union Carbide-Animal Method (forwarded to the FDA for inclusion in the PAM, Vol. II, Method III) is the recommended method for enforcement purposes for milk and animal tissues. These methods employ diazomethane as a methylating agent. A new plant and animal method has been submitted for enforcement purposes that does not employ diazomethane. The method principally involves the decomposition of ethephon to ethylene to determine the residues of ethephon. An independent lab validation of this method has been completed and accepted by EPA.

3. *Magnitude of residues.* Residue studies have been conducted to support ethephon registrations on: cotton, apple, cherry, tomato, wheat, barley, pepper, grape, tobacco, walnut, almond, blackberry, cantaloupe, pineapple, sugarcane and macadamia nuts. In addition, IR-4 has conducted residue studies to support use on coffee. All residue data requirements cited in the ethephon Reregistration Eligibility Document (RED) have been submitted to EPA. As a result of this work, increased tolerances have been proposed for cottonseed (6 ppm, PP 6F4743) and cotton gin by-products (180 ppm, amendment to PP 1H5603). As part of the reregistration process, the following tolerances will be revoked: cucumber, filbert, lemon, pineapple forage and fodder, pumpkin, tangerine, tangerine hybrids and sugarcane molasses. The tolerances for residues of ethephon in or on food and feed commodities are currently based in terms of ethephon per se. Processing studies have been conducted on apple, barley, cottonseed, grape, pineapple, tomato, and wheat and are deemed adequate to determine the extent to which residues of ethephon concentrate in food/feed items upon processing of the raw agricultural commodity. Data indicate that ethephon residues concentrate in apple juice, dried apple pomace, barley hulls, cottonseed meal, grape juice, raisin, raisin waste, dried grape pomace, pineapple bran and pulp, dried tomato pomace, wheat bran, wheat shorts and germ and red dog. Available apple processing data indicate that residues of ethephon do not concentrate in wet apple pomace. Therefore, a feed additive tolerance on apple pomace is not required. Available tomato processing data indicate that residues of ethephon do not concentrate in tomato paste and, therefore, no tolerance is needed. Pineapple processing data indicate that residues of ethephon concentrate in dried pineapple bran (5.3X; no longer a processed commodity) and wet pulp (1.2X), but do not concentrate in juice, syrup, and slices. No feed additive tolerance for residues of ethephon in processed pineapple is required. As a result of a recent cow feeding study, new animal tolerances have been proposed. The following tolerances have been proposed for cattle, goat, hog, horse, and sheep: meat - 0.02 ppm; meat byproducts (except kidney) - 0.20 ppm; kidney - 1.0 ppm; fat 0.02 ppm, and milk (cow and goat) - 0.01 ppm. Following a hen feeding study, new tolerances were proposed for poultry: poultry meat - 0.01 ppm; poultry meat byproducts (except liver) - 0.01 ppm; poultry fat - 0.02 ppm; poultry liver - 0.05 ppm; and eggs - 0.002 ppm.

B. Toxicological Profile

1. *Acute toxicity.* A complete battery of acute toxicity studies for ethephon technical was completed. The acute oral toxicity study resulted in a lethal dose LD_{50} of 1,600 milligram/kilogram (mg/kg) for both sexes. The acute dermal toxicity in rabbits resulted in an LD_{50} in either sex of greater than 5,000 mg/kg. The acute inhalation study in rats resulted in a lethal concentration LC_{50} of 4.52 milligram/liter (mg/l). Ethephon was corrosive to the skin of rabbits in the primary dermal irritation study. Therefore, the primary eye irritation study in rabbits was not required. The dermal sensitization study in guinea pigs indicated that ethephon is not a sensitizer. Based on the results of the dermal irritation study, and the anticipated results in an eye irritation study, ethephon technical is placed in toxicity Category I. Based on the acute toxicity data cited above, the registrant concluded that ethephon technical does not pose any acute dietary risks.

2. *Genotoxicty.* The potential for genetic toxicity of ethephon was evaluated in several assays. The compound was found to be mutagenic in strain TA-1535 with and without S9 activation in the Ames assay. In the *in vitro* chromosomal aberrations study with Chinese hamster ovary cells, ethephon was negative. Ethephon was tested for unscheduled DNA synthesis in the rat hepatocyte system and was found to be negative. Based on the data cited above, Aventis contends that the weight of evidence indicates that ethephon technical does not pose a risk of mutagenicity or genotoxicity.

3. *Reproductive and developmental toxicity.* Ethephon has been tested for reproductive toxicity in rats and developmental toxicity in both rats and rabbits (two studies in each species). The results of these studies are summarized below:

i. In a two generation reproduction study, 28 Sprague-Dawley rats per sex per dose were administered 0, 300, 3,000, or 30,000 ppm (0,15, 150, or 1,500 mg/kg/day of ethephon in the diet. For the offspring, a no observed adverse effect level (NOAEL) of 15 mg/kg/day and a lowest observed adverse effect level (LOAEL) of 150 mg/kg/day was established based on decreased body weight gain in the females at 150 mg/kg/day and in both sexes at 1,500 mg/kg/day. No effects were observed on fertility, gestation, mating, organ weights, or histopathology in any generation.

ii. In rats, ethephon was administered by gavage at doses of 0, 20, 600, or 1,800 mg/kg for gestation days 6 through 15.

At 1,800 mg/kg/ day, 14 of the 24 treated female rats died. No toxic effects were observed at lower doses. The NOAEL for maternal and developmental toxicity was 600 mg/kg/day. In a second study, rats were dosed by gavage at 0, 125, 250, or 500 mg/kg/day on days 6 through 15 of gestation. No toxic effects were observed at any dose. The NOAEL for maternal and developmental toxicity was 500 mg/kg/day.

iii. In rabbits, ethephon was administered by gavage at doses of 0, 50, 100, and 250 mg/kg for gestation days 6 through 19. The number of doses with live fetuses were 10, 12, 8, and 5, respectively. Resorptions were increased at 100 mg/kg/day and statistically significantly increased at 250 mg/kg/day. At 250 mg/kg/day, does were depressed, ataxic, showed an increase of clinical observations and gross pathology in the gut. The NOAEL for maternal toxicity was 50 mg/kg/day and the NOAEL for developmental toxicity was 50 mg/kg/day. In a second study, rabbits were dosed by gavage at 0, 62.5, 125, or 250 mg/kg/day on days 6 through 19 of gestation. Maternal morbidity, mortality, and clinical signs of toxicity were observed at 250 mg/kg/day. Fetal toxicity, consisting of decreased number of live fetuses per doe, increased early resorptions and post implantation loss was observed at 250 mg/kg/day. A NOAEL for maternal and developmental toxicity of 125 mg/kg/day was observed.

Based on the 2-generation reproduction study in rats, ethephon is not considered a reproductive toxicant and shows no evidence of endocrine effects. The data from the developmental toxicity studies on ethephon show no evidence of a potential for developmental effects (malformations or variations) at doses that are not maternally toxic. The NOAEL for both maternal and developmental toxicity in rats was 500 mg/kg/day and for rabbits, the NOAEL for both maternal and developmental toxicity was 50 mg/kg/day, respectively.

4. *Subchronic toxicity.* The subchronic toxicity of ethephon has been studied in three human studies and a 21–day dermal study in rabbits. These studies are summarized below:

i. Male and female subjects received ethephon at doses of 0.17 and 0.33 mg/kg/day for 22 days. The daily doses were divided into 3 gelatin capsules. No adverse effects were noted in clinical observations, hematology, serum chemistry including red blood cell cholinesterase inhibitors (RBC ChE) and urinalysis. There was a significant decrease in plasma ChE for both treatment groups, although the effect at 0.17 mg/kg/day appeared to be very close to the threshold for significance.

ii. Male and female subjects received ethephon at a dosage of 0.5 mg/kg/day for 16 days. The daily dose was divided into 3 gelatin capsules. No adverse effects were noted in clinical observations, hematology, serum chemistry (including RBC ChE) and urinalysis. There was a significant decrease in plasma cholinesterase.

iii. Ethephon was administered to male and female subjects at a daily dose of 124 mg/day (1.8 mg/kg/day average for both sexes) divided up into 3 gelatin capsules for 28 days. Clinical signs of toxicity were observed and included diarrhea, urgency of bowel movements, urinary urgency and stomach cramps. No effects were noted with regard to hematology, urinalysis or serum chemistry including cholinesterase evaluations.

iv. In a 21–day dermal study, 10 rabbits per sex per group were dosed dermally at 0, 25, 75, and 150 mg/kg/day, 5–days per week for 3 weeks. Skin effects were observed at all doses. Effects ranged from erythema and desquamation at the lowest dose to acanthosis and chronic inflammation at 150 mg/kg/day. No systemic treatment-related effects were observed on body weight, food consumption, organ weight or histopathology. The systemic NOAEL was greater than 150 mg/kg/day.

Based on the results of the three studies in humans, a LOAEL of 1.8 mg/kg/day was established in the 28–day study. In the 22–day study, 0.17 mg/kg/day appeared to be very close to the threshold for significance. The systemic NOAEL in the 21–day dermal study in rabbits was greater than 150 mg/kg/day.

5. *Chronic toxicity.* A 2 year chronic toxicity/carcinogenicity study in rats, an 18-month mouse carcinogenicity study, a 1–year study in dogs, and a 2–year chronic study in dogs were performed on ethephon technical. These studies are summarized below:

i. A combined chronic/carcinogenicity study was performed on ethephon in Sprague-Dawley rats. Doses administered in the feed were 0, 300, 3,000, 10,000, or 30,000 ppm for 95 weeks to the males and 103 weeks for the females. The doses administered relative to body weight were 0, 13, 131, 446, or 1,416 mg/kg/day for males and 0, 16, 161, 543, or 1,794 mg/kg/day for females. Plasma and erythrocyte cholinesterase was inhibited at all doses (NOAEL <300 ppm). Brain cholinesterase inhibition was not observed. A decrease in male body weight was observed at 10,000 ppm. At 30,000 ppm a body weight decrease was observed in both sexes. Additional effects at 30,000 ppm were thyroglossal duct cysts, kidney glomerulo-sclerosis, nephritis, and biliary hyperplasia cholangiofibrosis. No carcinogenic effects were observed.

ii. Male and female CD-1 mice were administered ethephon in the diet at 0, 100, 1,000, or 10,000 ppm (0, 15.5, 156, or 1,630 mg/kg/day) for 78 weeks. An additional dose level of 50,000 ppm was terminated at 12-weeks because of excessive morbidity and mortality. No evidence of treatment related tumors was observed. A NOAEL of 15.5 mg/kg/day was determined for plasma cholinesterase inhibition. At 1,630 mg/kg/day male body weights were increased and female body weights decreased compared to controls.

iii. Ethephon technical was administered in the feed at 0, 30, 300, and 3,000 ppm (0, 0.75, 7.5, or 75 mg/kg/day) to male and female beagle dogs for 2 years. Due to toxicity/morbidity, the high dose was reduced as follows: 75 mg/kg/day weeks 0–3; 50 mg/kg/day weeks 4–5; 25 mg/kg/day weeks 6-24; 37.5 mg/kg/day weeks 25-104. Plasma cholinesterase was inhibited at all doses (NOAEL< 0.75 mg/kg/day). A NOAEL for erythrocyte cholinesterase inhibition of 0.75 mg/kg/day with a LOAEL of 7.5 mg/kg/day was observed. Histopathology showed smooth muscle atrophy in the gut at 7.5 mg/kg/day with a NOAEL of 0.75 mg/kg/day.

iv. Ethephon was administered in the feed at doses of 0, 100, 300, 1,000, or 2,000 ppm (0, 2.7, 8.2, 28.5, or 52.1 mg/kg/day) to male and female beagle dogs for 52 weeks. A systemic NOAEL of 1,000 ppm (28.5 mg/kg/day) was observed for decreased spleen weight, body weight, hemoglobin and hematocrit in males. The females showed a decreased spleen/body weight ratio for the same NOAEL. Cholinesterase inhibition was not determined.

The NOAEL in the chronic rat study was 131 mg/kg/day based on the decreased body weight gains in males. The NOAEL in the most recent 1–year dog study was determined to be 28.5 mg/kg/day based on body weight, organ weight effects and hematology effects. Ethephon has been tested in both rats and mice for carcinogenic activity. No carcinogenic effects were observed.

6. *Animal metabolism.* The rat metabolism study consisted of a single intravenous dose group at 50 mg/kg, and single and multiple oral high dose groups at 50 and 1,000 mg/kg. The oral Cmax (maximum concentrations) were reached at 1.3 and 1 hours for the 50 mg/kg dose and 1.9 and 2.5 hours for the 1,000 mg/kg dose in males and females, respectively. The $t_{1/2}$ of the

rapid excretion phase (A-phase) at the 50 mg/kg dose was 7 hours for both sexes and 4 and 9 hours at 1,000 mg/kg for the males and females, respectively. Oral and intravenous doses were rapidly excreted in the urine and accounted for 48 to 71% of the administered radioactivity. Approximately 7% was excreted in the feces. Exhaled ethylene was 10–20% and CO2 was less than 1% of the administered dose. The highest tissue concentrations were found in the blood, bone, liver, kidney, and spleen with no significant differences between single and multiple dosing. No significant differences were observed in the excretion pattern with either sex or multiple dosing.

In a goat metabolism study, ethephon was incorporated into natural products (glutathione conjugates, protein, glycogen, and triglycerides) and expired as CO2 and ethylene.

In a hen metabolism study, ethephon metabolism involved an initial removal of chlorine to form 2-hydroxyethanephosphonic acid followed by further metabolism which results in the release of ethylene and carbon dioxide as well as intermediates which can enter into fundamental biochemical pathways leading to the biosynthesis of proteins and lipids. Aventis believes that ethephon technical is not metabolized to breakdown products that can be reasonably expected to present any chronic dietary risk.

7. *Metabolite toxicology.* Ethephon degrades to ethylene phosphate and chloride. Therefore, no significant toxicity is anticipated from these breakdown/metabolites.

8. *Endocrine disruption.* EPA is required under the FFDCA, as amended by Federal Quality Protection Act (FQPA), to develop a screening program to determine certain substances (including all pesticide active and other ingredients) ''may have an effect in humans that is similar to an effect produced by a naturally occurring estrogen, or other such endocrine effects as the Administrator may designate.'' Following the recommendations of its Endocrine Disruptor Screening and Testing Advisory Committee (EDSTAC), EPA determined that there were scientific bases for including, as part of the program, the androgen and thyroid hormone systems, in addition to the estrogen hormone system. EPA also adopted EDSTAC's recommendation that the Program include evaluations of potential effects in wildlife. For pesticide chemicals, EPA will use FIFRA and, to the extent that effects in wildlife may help determine whether a substance may have an effect in humans, FFDCA authority to require the wildlife evaluations. As the science develops and resources allow, screening of additional hormone systems may be added to the Endocrine Disruptor Screening Program (EDSP). When the appropriate screening and/or testing protocols being considered under the Agency's EDSP have been developed, ethephon may be subjected to additional screening and/or testing to better characterize effects related to endocrine disruption.

C. Aggregate Exposure

1. *Dietary exposure*—i. *Food.* Ethephon is registered for use on the following food crops: cotton, apple, cherry, tomato, wheat, barley, pepper, grape, tobacco, walnut, almond, blackberry, cantaloupe, pineapple, sugarcane, and macadamia nuts. In addition, IR-4 has conducted work to support new use on coffee. Ethephon has several ornamental/non-food applications as well. All residue requirements cited in the ethephon RED have been submitted to EPA. As a result of this work, increased tolerances have been proposed for cottonseed (6 ppm, PP 6F4743) and cotton gin byproducts (180 ppm, amendment to PP 1H5603). As part of the reregistration process, the following tolerances will be revoked: cucumber, filbert, lemon, pineapple, forage, fodder, pumpkin, tangerine, tangerine hybrids, and sugarcane molasses. The tolerances for residues of ethephon in or on food and feed commodities are currently based in terms of ethephon per se. An enforcement method was submitted to EPA for determination of residues of ethephon in/on plant commodities and in milk, ruminant and poultry tissues. The ethephon RED lists the number of treated acres by crop for all major ethephon uses in the United States.

ii. *Drinking water.* Based on the available studies and the use pattern, Aventis does not anticipate residues of ethephon in drinking water. There is no established Maximum Concentration Level or Health Advisory Level for ethephon under the Safe Drinking Water Act.

2. *Non-dietary exposure.* The potential for non-occupational exposure to the general public is also insignificant since only approximately 800 lbs of ethephon technical is sold in the U.S. home and garden market annually. The residential lawn or garden uses anticipated for these products where the general population may be exposed via inhalation or dermal routes are negligible. The home and garden formulation that is sold in the United States contains only 3.9% ethephon which would further limit exposure.

D. Cumulative Effects

While ethephon is an inhibitor of ChE of the plasma and RBC, it has not demonstrated any ability to inhibit brain ChE in rats, mice, or dogs under condition of a chronic dietary dosing regimen. Furthermore, unlike classic organophosphate ChE inhibitors, ethephon did not induce symptoms of ChE inhibition, such as constriction of the pupils, salivation, lacrimation, diarrhea, urination, tremors, and convulsions under chronic feeding of doses up to 30,000, 10,000, and 2,000 ppm in the rat, mouse, and dog, respectively. In the rat study, the plasma and RBC ChE were inhibited approximately 55% and 85%, respectively. In the mouse study, both peripheral ChEs were inhibited by approximately 70%. Although cholinesterase determinations were not performed in the 1 year dog study, in a 2 year dog study, plasma and RBC ChE were inhibited 60% and 70%, respectively. Despite these high degrees of inhibition of peripheral ChE, no clinical signs or symptoms consistent with ChE inhibition occurred in these studies. It is generally only under very extreme conditions such as high doses administered via oral gavage or under occlusive dermal dressing in rabbits in which signs that are consistent with ChE inhibition are observed. These clinical signs generally occur at doses that produce acute lethality. However, these signs may in fact be unrelated to CNS ChE inhibition and could be a non-specific reaction to the acidic and, therefore, highly irritant nature of ethephon.

Ethephon should not be regarded as a classical inhibitor of ChE such as the carbamates and organophosphates since it does not produce the typical nervous system effects of those compounds. The recently updated chronic data base adequately proves that very high dietary doses of ethephon do not inhibit brain ChE, that it does not produce the classical clinical signs of ChE inhibition, and that it does not produce life-shortening effects, despite moderate to severe lifetime inhibition of both plasma and RBC ChE. The inhibition of ChE by ethephon is only an indicator of exposure and is not a measure of its potential for inducing ChE-mediated toxicity. In summary, Aventis concludes that consideration of a common mechanism of toxicity is not appropriate at this time since there is no significant toxicity observed for ethephon. Even at high doses, ethephon does not act as a classical inhibitor of cholinesterase.

Exposure, even at high doses, does not lead to brain cholinesterase inhibition. There is no reliable data to indicate that the effects noted would be cumulative with those of organophosphate or carbamate-type compounds. Therefore, Aventis has considered only the potential risks of ethephon in its exposure assessment.

E. Safety Determination

EPA reference dose (RfD) Peer Review Committee determined that the RfD should be based on the 28–day study in humans. Using the LOAEL of 1.8 mg/kg/day in this study and an uncertainty factor (UF) of 100 to account for intraspecies variability and the lack of a NOAEL, an RfD of 0.018 mg/kg/day was established as the chronic dietary endpoint.

1. *U.S. population.* A chronic dietary risk assessment which included all proposed changes in ethephon tolerances was conducted on ethephon using two approaches: A Tier 1 approach using tolerance-level residues for all foods included in the analysis, and Monte Carlo simulations using tolerance-level residues for all foods adjusted for percent crop treated (PCT) (Tier 3). Using the Tier 1 approach, margin of exposure (MOEs) at the percentiles of exposure for the overall U.S. population were 25 and 9, respectively. Using Tier 3 procedures in which residues were adjusted for the PCT, MOEs were 114 and 42, respectively. Acute exposure was also estimated for infants and children 1 to 6 years of age. In the Tier 1 analysis, the most highly exposed subgroup was infants. For this population, MOEs at the 95th and 99th percentiles of exposure were 7 and 4, respectively. Using the Tier 3 method MOEs were 56 and 12, respectively. Even under the conservative assumptions presented here, the more realistic estimates of dietary exposure (Tier 3 analyses) clearly demonstrate adequate MOEs up to the 99th percentile of exposure for all population groups analyzed.

2. *Infants and children.* In assessing the potential for additional sensitivity of infants and children to residues of ethephon, the available developmental toxicity and reproductive toxicity studies and the potential for endocrine modulation by ethephon were considered. Developmental toxicity studies in two species indicate that ethephon is not a teratogen. The 2 generation reproduction study in rats demonstrated that there were no adverse effects on reproductive performance, fertility, fecundity, pup survival, or pup development. Maternal and developmental NOAELs and LOAELs were comparable, indicating no increase in susceptibility of developing organisms. No evidence of endocrine effects were noted in any study. It is therefore, concluded that ethephon poses no additional risk for infants and children and no additional uncertainty factor is warranted. FFDCA section 408 provides that an additional safety factor for infants and children may be applied in the case of threshold effects. Since, as discussed in the previous section, the toxicology studies do not indicate that young animals are any more susceptible than adult animals and the fact that the proposed RfD calculated from the LOAEL from the 28-day human study already incorporates an additional uncertainty factor, Aventis believes that an adequate margin of safety is, therefore, provided by the RfD established by EPA. Additionally, this LOAEL is also 8X lower than the next lowest NOAEL (2 generation reproduction study, NOAEL=15 mg/kg/day) in the ethephon toxicology data base. Ethephon has no endocrine-modulation characteristics as demonstrated by the lack of endocrine effects in developmental, reproductive, subchronic, and chronic studies.

An RfD of 0.018 mg/kg/day has been established by EPA based on the LOAEL in the 28–day human study. Adequate MOEs exist for all populations including infants and children. No additional uncertainty factor for infants and children is warranted based on the completeness and reliability of the database, the demonstrated lack of increased risk to developing organisms, and the lack of endocrine-modulating effects.

F. International Tolerances

The codex maximum residue limits (MRLs) for grape is 10 mg/kg verses 2 ppm for U.S. tolerance. The tomato codex MRL is 3 mg/kg verses 2 ppm for the U.S. tolerance. All other U.S. tolerances are identical to corresponding codex MRLs.

[FR Doc. 02–19803 Filed 8–6–02; 8:45 am]

BILLING CODE 6560–50–S

ENVIRONMENTAL PROTECTION AGENCY

[OPP–2002–0173; FRL–7191–3]

Notice of Filing a Pesticide Petition to Establish a Tolerance for a Certain Pesticide Chemical in or on Food

AGENCY: Environmental Protection Agency (EPA).

ACTION: Notice.

SUMMARY: This notice announces the initial filing of a pesticide petition proposing the establishment of regulations for residues of a certain pesticide chemical in or on various food commodities.

DATES: Comments, identified by docket ID number OPP–2002–0173, must be received on or before September 6, 2002.

ADDRESSES: Comments may be submitted by mail, electronically, or in person. Please follow the detailed instructions for each method as provided in Unit I.C. of the **SUPPLEMENTARY INFORMATION**. To ensure proper receipt by EPA, it is imperative that you identify docket ID number OPP–2002–0173 in the subject line on the first page of your response.

FOR FURTHER INFORMATION CONTACT: By mail: Sidney Jackson, Registration Division (7505C), Office of Pesticide Programs, Environmental Protection Agency, 1200 Pennsylvania Ave., NW., Washington, DC 20460;telephone number: (703) 305–7610; e-mail address: jackson.sidney@epa.gov.

SUPPLEMENTARY INFORMATION:

I. General Information

A. Does this Action Apply to Me?

You may be affected by this action if you are an agricultural producer, food manufacturer or pesticide manufacturer. Potentially affected categories and entities may include, but are not limited to:

Categories	NAICS codes	Examples of potentially affected entities
Industry	111 112 311 32532	Crop production Animal production Food manufacturing Pesticide manufacturing

This listing is not intended to be exhaustive, but rather provides a guide for readers regarding entities likely to be affected by this action. Other types of entities not listed in the table could also be affected. The North American Industrial Classification System (NAICS) codes have been provided to assist you and others in determining whether or not this action might apply to certain entities. If you have questions regarding the applicability of this action to a particular entity, consult the person listed under **FOR FURTHER INFORMATION CONTACT**.

B. How Can I Get Additional Information, Including Copies of this Document and Other Related Documents?

1. *Electronically*. You may obtain electronic copies of this document, and certain other related documents that might be available electronically, from the EPA Internet Home Page at http://www.epa.gov/. To access this document, on the Home Page select ''Laws and Regulations,'' ''Regulations and Proposed Rules,'' and then look up the entry for this document under the ''**Federal Register**—Environmental Documents.'' You can also go directly to the **Federal Register** listings at http://www.epa.gov/fedrgstr/.

2. *In person*. The Agency has established an official record for this action under docket ID number OPP–2002–0173. The official record consists of the documents specifically referenced in this action, any public comments received during an applicable comment period, and other information related to this action, including any information claimed as confidential business information (CBI). This official record includes the documents that are physically located in the docket, as well as the documents that are referenced in those documents. The public version of the official record does not include any information claimed as CBI. The public version of the official record, which includes printed, paper versions of any electronic comments submitted during an applicable comment period, is available for inspection in the Public Information and Records Integrity Branch (PIRIB), Rm. 119, Crystal Mall #2, 1921 Jefferson Davis Highway, Arlington, VA, from 8:30 a.m. to 4 p.m., Monday through Friday, excluding legal holidays. The PIRIB telephone number is (703)305–5805.

C. How and to Whom Do I Submit Comments?

You may submit comments through the mail, in person, or electronically. To ensure proper receipt by EPA, it is imperative that you identify docket ID number OPP–2002–0173 in the subject line on the first page of your response.

1. *By mail*. Submit your comments to: Public Information and Records Integrity Branch (PIRIB), Information Resources and Services Division (7502C), Office of Pesticide Programs (OPP), Environmental Protection Agency, 1200 Pennsylvania Ave., NW., Washington, DC 20460.

2. *In person or by courier*. Deliver your comments to: Public Information and Records Integrity Branch (PIRIB), Information Resources and Services Division (7502C), Office of Pesticide Programs (OPP), Environmental Protection Agency, Rm. 119, Crystal Mall #2, 1921 Jefferson Davis Highway, Arlington, VA. The PIRIB is open from 8:30 a.m. to 4 p.m., Monday through Friday, excluding legal holidays. The PIRIB telephone number is (703) 305–5805.

3. *Electronically*. You may submit your comments electronically by e-mail to: opp-docket@epa.gov, or you can submit a computer disk as described above. Do not submit any information electronically that you consider to be CBI. Avoid the use of special characters and any form of encryption. Electronic submissions will be accepted in WordPerfect 6.1/8.0/9.0 or ASCII file format. All comments in electronic form must be identified by docket ID number OPP–2002–0173. Electronic comments may also be filed online at many Federal Depository Libraries.

D. How Should I Handle CBI That I Want to Submit to the Agency?

Do not submit any information electronically that you consider to be CBI. You may claim information that you submit to EPA in response to this document as CBI by marking any part or all of that information as CBI. Information so marked will not be disclosed except in accordance with procedures set forth in 40 CFR part 2. In addition to one complete version of the comment that includes any information claimed as CBI, a copy of the comment that does not contain the information claimed as CBI must be submitted for inclusion in the public version of the official record. Information not marked confidential will be included in the public version of the official record without prior notice. If you have any questions about CBI or the procedures for claiming CBI, please consult the person identified under **FOR FURTHER INFORMATION CONTACT**.

E. What Should I Consider as I Prepare My Comments for EPA?

You may find the following suggestions helpful for preparing your comments:

1. Explain your views as clearly as possible.
2. Describe any assumptions that you used.
3. Provide copies of any technical information and/or data you used that support your views.
4. If you estimate potential burden or costs, explain how you arrived at the estimate that you provide.
5. Provide specific examples to illustrate your concerns.
6. Make sure to submit your comments by the deadline in this notice.
7. To ensure proper receipt by EPA, be sure to identify the docket control number assigned to this action in the subject line on the first page of your response. You may also provide the name, date, and **Federal Register** citation.

II. What Action is the Agency Taking?

EPA has received a pesticide petition as follows proposing the establishment and/or amendment of regulations for residues of a certain pesticide chemical in or on various food commodities under section 408 of the Federal Food, Drug, and Cosmetic Act (FFDCA), 21 U.S.C. 346a. EPA has determined that this petition contains data or information regarding the elements set forth in section 408(d)(2); however, EPA has not fully evaluated the sufficiency of the submitted data at this time or whether the data support granting of the petition. Additional data may be needed before EPA rules on the petition.

List of Subjects

Environmental protection, Agricultural commodities, Feed additives, Food additives, Pesticides and pests, Reporting and recordkeeping requirements.

Dated: July 31, 2002.

Peter Caulkins,

Acting Director, Registration Division, Office of Pesticide Programs.

Summary of Petition

The petitioner summary of the pesticide petition is printed below as required by section 408(d)(3) of the FFDCA. The summary of the petition was prepared by the petitioner and represents the view of the petitioner. EPA is publishing the petition summary verbatim without editing it in any way. The petition summary announces the availability of a description of the analytical methods available to EPA for the detection and measurement of the pesticide chemical residues or an explanation of why no such method is needed.

Interregional Research Project Number (IR–4)

PP 0E6150

EPA has received a pesticide petition PP (0E6150) from the Interregional Research Project Number (IR-4), Technology Centre of New Jersey, Rutgers, the State University of New Jersey, 681 U. S. Hwy., #1 South, North Brunswick, NJ 08902–3390 proposing, pursuant to section 408(d) of the

FFDCA, 21 U.S.C. 346a(d), to amend 40 CFR part 180 by establishing tolerances for combined residues of the herbicide, sethoxydim (2-[1-(ethoxyimino)butyl]-5-[2-(ethylthio)propyl]-3-hydroxy-2-cyclohexen-1-one) and its metabolites containing the 2-cyclohexen-1- one moiety (calculated as the herbicide)] in or on the raw agricultural commodities as follows:

1. Herb subgroup 19A, fresh leaves, except lemongrass at 5.0 parts per million (ppm).

2. Abarella, atemoya, avocado, acerola, banana, birbira, blimbe, breadfruit, cacao bean canistel, cherimoya, coconut, custard apple, date, durian, feijoa, fig, governor's plum, guava, ilama, imbe, imbu, jaboticaba, jackfruit, kiwifruit, longan, lychee, mamey apple, mango, marmaladebox, mamey sapote, mangosteen, mountain papaya, papaya, passionfruit, persimmon, pomegrante, rambutan, rose apple, sapodilla, black sapote, white sapote, soursop, spanish lime, starfruit, star apple, surinam cherry, sugar apple, tamarind, ugli fruit, and wax jambu at 0.5 ppm.

3. Lingonberries, juneberry, and salal at 5.0 ppm.

EPA has determined that the petition contains data or information regarding the elements set forth in section 408(d)(2) of the FFDCA; however, EPA has not fully evaluated the sufficiency of the submitted data at this time or whether the data support granting of the petition. Additional data may be needed before EPA rules on the petition. This notice includes a summary of the petition prepared by BASF Corporation, P.O. Box 13528, Research Triangle Park, North Carolina.

A. Residue Chemistry

1. *Plant metabolism*. The qualitative nature of the residues in plants and animals is adequately understood for the purposes of registration.

2. *Analytical method*. Analytical methods for detecting levels of sethoxydim and its metabolites in or on food with a limit of detection that allows monitoring of food with residues at or above the levels set in these tolerances were submitted to EPA. The proposed analytical method involves extraction, partition, and clean-up. Samples are then analyzed by gas chromatography with sulfur-specific flame photometric detection. The limit of quantitation (LOQ) is 0.05 ppm.

B. Toxicological Profile

EPA has evaluated the available toxicity data and considered their validity, completeness, and reliability as well as the relationship of the results of the studies to human risk. EPA has also considered available information concerning the reliability of the sensitivities of major identifiable subgroups of consumers, including infants and children. The nature of the toxic effects caused by sethoxydim are discussed in Unit II. A. of the final rule on sethoxydim pesticide tolerances published in the **Federal Register** of October 8, 1998 (63 FR 54066) (FRL–6034–1)

1. *Animal metabolism*. In a rat metabolism study, excretion was extremely rapid and tissue accumulation was negligible.

2. *Metabolite toxicology*. As a condition to registration, BASF had been asked to submit additional toxicology studies for the hydroxy-metabolites of sethoxydim. EPA agreed with BASF's recommendation to use the most abundant metabolite, 5–OH–MSO2, as surrogate for all metabolites. Based on these data, it was concluded that the toxicological potency of the plant hydroxy-metabolites is likely to be equal or less than that of the parent compound. The tolerance expression for sethoxydim and its metabolites containing the 2-cyclohexen-1-one moiety, measured as parent. Hence, the hyrdroxy-metabolites are figured into all tolerance calculations.

3. *Endocrine disruption*. No specific tests have been performed with sethoxydim to determine whether the chemical may have an effect in humans that is similar to an effect produced by naturally-occurring estrogen or other endocrine effects.

C. Aggregate Exposure

1. *Dietary exposure*—i. *Food*. For purposes of assessing the potential dietary exposure, BASF has estimated aggregate exposure based on the Theoretical Maximum Residue Contribution (TMRC) from existing and pending tolerances for sethoxydim. (The TMRC is a ''worst case'' estimate of dietary exposure since it is assumed that 100% of all crops for which tolerances are established are treated and that pesticide residues are at the tolerance levels.) The TMRC from existing tolerances for the overall U.S. population is estimated at approximately 44% of the reference dose (RfD). BASF estimates indicate that dietary exposure will not exceed the RfD for any population subgroup for which EPA has data. This exposure assessment relies on very conservative assumptions 100% of crops will contain sethoxydim residues and those residues would be at the level of the tolerance which results in an overestimate of human exposure.

Other potential sources of exposure of the general population to residues of pesticides are residues in drinking water and exposure from non-occupational sources.

ii. *Drinking water*. Based on the available studies submitted to EPA for assessment of environmental risk, BASF does not anticipate exposure to residues of sethoxydim in drinking water. There is no established maximum concentration level (MCL) for residues of sethoxydim in drinking water under the safe drinking water act (SDWA).

2. *Non-dietary exposure*. BASF has not estimated non-occupational exposure for sethoxydim. Sethoxydim is labeled for use by homeowners on and around the following use sites: Flowers, evergreens, shrubs, trees, fruits, vegetables, ornamental groundcovers, and bedding plants. Hence, the potential for non-occupational exposure to the general population exists. However, these use sites do not appreciably increase exposure. Protective clothing requirements, including the use of gloves, adequately protect homeowners when applying the product. The product may only be applied through hose-end sprayers or tank sprayers as a 0.14% solution. Sethoxydim is not a volatile compound so inhalation exposure during and after application would be negligible. Dermal exposure would be minimal in light of the protective clothing and the low application rate. According to BASF, post-treatment (re-entry) exposure would be negligible for these use sites as contact with treated surfaces would be low. BASF concludes that the potential for non-occupational exposure to the general population is insignificant.

D. Cumulative Effects

BASF also considered the potential for cumulative effects of sethoxydim and other substances that have a common mechanism of toxicity. BASF is aware of one other active ingredient which is structurally similar, clethodim. However BASF believes that consideration of a common mechanism of toxicity is not appropriate at this time. BASF does not have any reliable information to indicate that toxic effects produced by sethoxydim would be cumulative with clethodim or any other chemical; thus BASF is considering only the potential risks of sethoxydim in its exposure assessment.

E. Safety Determination

1. *U.S. population*. RFD using the conservative exposure assumptions described above, BASF has estimated that aggregate exposure to sethoxydim

will utilize 44% of the RfD for the U.S. population. EPA generally has no concern for exposures below 100% of the RfD. Therefore, based on the completeness and reliability of the toxicity data, and the conservative exposure assessment, BASF concludes that there is a reasonable certainty that no harm will result from aggregate exposure to residues of sethoxydim, including all anticipated dietary exposure and all other non-occupational exposures.

2. *Infants and children*—i. Developmental toxicity was observed in a developmental toxicity study using rats but was not seen in a developmental toxicity study using rabbits. In the developmental toxicity study in rats a maternal no observed adverse effect level (NOAEL) of 180 milligrams/kilograms/day (mg/kg/day) and a maternal lowest observed adverse effect level (LOAEL) of 650 mg/kg/day (irregular gait, decreased activity, excessive salivation, and anogenital staining) was determined. A developmental NOAEL of 180 mg/kg/day and a developmental lowest effect level (LEL)__ of 650 mg/kg/day (21 to 22% decrease in fetal weights, filamentous tail and lack of tail due to the absence of sacral and/or caudal vertebrae, and delayed ossification in the hyoids, vertebral centrum and/or transverse processes, sternebrae and/or metatarsals, and pubes). Since developmental effects were observed only at doses where maternal toxicity was noted, the developmental effects observed are believed to be secondary effects resulting from maternal stress.

ii. *Reproductive toxicity*. A 2–generation reproduction study with rats fed diets containing 0, 150, 600, and 3,000 ppm (approximately 0, 7.5, 30, and 150 mg/kg/day) produced no reproductive effects during the course of the study. Although the dose levels were insufficient to elicit a toxic response, the Agency has considered this study usable for regulatory purposes and has established a free-standing NOAEL of 3,000 ppm (approximately 150 mg/kg/day), Proposed Rule of March 15, 1995, (60 FR 13941) (FRL–4936–1)

iii. *Reference dose*. Based on the demonstrated lack of significant developmental or reproductive toxicity BASF believes that the RfD used to assess safety to children should be the same as that for the general population, 0.09 mg/kg/day. Using the conservative exposure assumptions described above, BASF has concluded that the most sensitive child population is that of children ages 1 to 6. BASF calculates the exposure to this group to be approximately 96% of the RfD for all uses (including those proposed in this document). Based on the completeness and reliability of the toxicity data and the conservative exposure assessment, BASF concludes that there is a reasonable certainty that no harm will result to infants and children from aggregate exposure to the residues of sethoxydim, including all anticipated dietary exposure and all other non-occupational exposures.

F. International Tolerances

A maximum residue level has not been established by the Codex Alimentarius Commission for residues of sethoxydim on the crops included in this proposal.

[FR Doc. 02–19983 Filed 8–6–02; 8:45 am]

BILLING CODE 6560–50–S

ENVIRONMENTAL PROTECTION AGENCY

[OPP–2002–2139; FRL–7186–5]

Notice of Filing a Pesticide Petition to Establish a Tolerance for a Certain Pesticide Chemical in or on Food

AGENCY: Environmental Protection Agency (EPA).

ACTION: Notice.

SUMMARY: This notice announces the initial filing of a pesticide petition proposing the establishment of regulations for residues of a certain pesticide chemical in or on various food commodities.

DATES: Comments, identified by docket ID number OPP–2002–2139, must be received on or before September 6, 2002.

ADDRESSES: Comments may be submitted by mail, electronically, or in person. Please follow the detailed instructions for each method as provided in Unit I.C. of the **SUPPLEMENTARY INFORMATION**. To ensure proper receipt by EPA, it is imperative that you identify docket ID number OPP–2002–2139 in the subject line on the first page of your response.

FOR FURTHER INFORMATION CONTACT: By mail: Joanne I. Miller, Registration Division (7505C), Office of Pesticide Programs, Environmental Protection Agency, 1200 Pennsylvania Ave., NW., Washington, DC 20460; telephone number: (703) 305–6224; e-mail address: miller.joanne@epa.gov.

SUPPLEMENTARY INFORMATION:

I. General Information

A. Does this Action Apply to Me?

You may be affected by this action if you are an agricultural producer, food manufacturer or pesticide manufacturer. Potentially affected categories and entities may include, but are not limited to:

Categories	NAICS codes	Examples of potentially affected entities
Industry	111 112 311 32532	Crop production Animal production Food manufacturing Pesticide manufacturing

This listing is not intended to be exhaustive, but rather provides a guide for readers regarding entities likely to be affected by this action. Other types of entities not listed in the table could also be affected. The North American Industrial Classification System (NAICS) codes have been provided to assist you and others in determining whether or not this action might apply to certain entities. If you have questions regarding the applicability of this action to a particular entity, consult the person listed under **FOR FURTHER INFORMATION CONTACT**.

B. How Can I Get Additional Information, Including Copies of this Document and Other Related Documents?

1. *Electronically.* You may obtain electronic copies of this document, and certain other related documents that might be available electronically, from the EPA Internet Home Page at http://www.epa.gov/. To access this document, on the Home Page select ''Laws and Regulations,'' ''Regulations and Proposed Rules,'' and then look up the entry for this document under the ''**Federal Register**—Environmental Documents.'' You can also go directly to the **Federal Register** listings at http://www.epa.gov/fedrgstr/. A frequently updated electronic version of 40 CFR part 180 is available at http://www.access.gpo.gov/nara/cfr/cfrhtml_00/Title_40/40cfr180_00.html a beta site currently under development.

2. *In person.* The Agency has established an official record for this action under docket ID number OPP–2002–2139. The official record consists of the documents specifically referenced in this action, any public comments received during an applicable comment period, and other information related to

this action, including any information claimed as Confidential Business Information (CBI). This official record includes the documents that are physically located in the docket, as well as the documents that are referenced in those documents. The public version of the official record does not include any information claimed as CBI. The public version of the official record, which includes printed, paper versions of any electronic comments submitted during an applicable comment period, is available for inspection in the Public Information and Records Integrity Branch (PIRIB), Rm. 119, Crystal Mall #2, 1921 Jefferson Davis Highway, Arlington, VA, from 8:30 a.m. to 4 p.m., Monday through Friday, excluding legal holidays. The PIRIB telephone number is (703) 305–5805.

C. How and to Whom Do I Submit Comments?

You may submit comments through the mail, in person, or electronically. To ensure proper receipt by EPA, it is imperative that you identify docket ID number OPP–2002–2139 in the subject line on the first page of your response.

1. *By mail.* Submit your comments to: Public Information and Records Integrity Branch (PIRIB), Information Resources and Services Division (7502C), Office of Pesticide Programs (OPP), Environmental Protection Agency, 1200 Pennsylvania Ave., NW., Washington, DC 20460.

2. *In person or by courier.* Deliver your comments to: Public Information and Records Integrity Branch (PIRIB), Information Resources and Services Division (7502C), Office of Pesticide Programs (OPP), Environmental Protection Agency, Rm. 119, Crystal Mall #2, 1921 Jefferson Davis Highway, Arlington, VA. The PIRIB is open from 8:30 a.m. to 4 p.m., Monday through Friday, excluding legal holidays. The PIRIB telephone number is (703) 305–5805.

3. *Electronically.* You may submit your comments electronically by e-mail to: opp-docket@epa.gov, or you can submit a computer disk as described above. Do not submit any information electronically that you consider to be CBI. Avoid the use of special characters and any form of encryption. Electronic submissions will be accepted in Wordperfect 6.1/8.0 or ASCII file format. All comments in electronic form must be identified by docket ID number OPP–2002–2139. Electronic comments may also be filed online at many Federal Depository Libraries.

D. How Should I Handle CBI That I Want to Submit to the Agency?

Do not submit any information electronically that you consider to be CBI. You may claim information that you submit to EPA in response to this document as CBI by marking any part or all of that information as CBI. Information so marked will not be disclosed except in accordance with procedures set forth in 40 CFR part 2. In addition to one complete version of the comment that includes any information claimed as CBI, a copy of the comment that does not contain the information claimed as CBI must be submitted for inclusion in the public version of the official record. Information not marked confidential will be included in the public version of the official record without prior notice. If you have any questions about CBI or the procedures for claiming CBI, please consult the person identified under **FOR FURTHER INFORMATION CONTACT**.

E. What Should I Consider as I Prepare My Comments for EPA?

You may find the following suggestions helpful for preparing your comments:

1. Explain your views as clearly as possible.
2. Describe any assumptions that you used.
3. Provide copies of any technical information and/or data you used that support your views.
4. If you estimate potential burden or costs, explain how you arrived at the estimate that you provide.
5. Provide specific examples to illustrate your concerns.
6. Make sure to submit your comments by the deadline in this notice.
7. To ensure proper receipt by EPA, be sure to identify the docket ID number assigned to this action in the subject line on the first page of your response. You may also provide the name, date, and **Federal Register** citation.

II. What Action is the Agency Taking?

EPA has received a pesticide petition as follows proposing the establishment and/or amendment of regulations for residues of a certain pesticide chemical in or on various food commodities under section 408 of the Federal Food, Drug, and Cosmetic Act (FFDCA), 21 U.S.C. 346a. EPA has determined that this petition contains data or information regarding the elements set forth in section 408(d)(2); however, EPA has not fully evaluated the sufficiency of the submitted data at this time or whether the data support granting of the petition. Additional data may be needed before EPA rules on the petition.

List of Subjects

Environmental protection, Agricultural commodities, Feed additives, Food additives, Pesticides and pests, Reporting and recordkeeping requirements.

Dated: July 29, 2002.

Peter Caulkins,

Acting Director, Registration Division, Office of Pesticide Programs.

Summary of Petition

The petitioner summary of the pesticide petition is printed below as required by section 408(d)(3) of the FFDCA. The summary of the petition was prepared by Syngenta Crop Protection Inc. and represents the view of Syngenta. EPA is publishing the petition summary verbatim without editing it in any way. The petition summary announces the availability of a description of the analytical methods available to EPA for the detection and measurement of the pesticide chemical residues or an explanation of why no such method is needed.

Syngenta Crop Protection, Inc.

Interregional Research Project Number #4

PP 2F6443, PP 2E6465

EPA has received pesticide petitions 2F6443 and from Syngenta Crop Protection, Inc., P.O. Box 18300, Greensboro, NC 27419–8300 and 2E6465 from the Interregional Research Project Number #4, 681 U.S. Highway #1 South, North Brunswick, NJ 08902 proposing, pursuant to section 408(d) of the Federal Food, Drug, and Cosmetic Act (FFDCA), 21 U.S.C. 346a(d), to amend 40 CFR part 180 by establishing a tolerance for residues of mesotrione, 2-[4-(methylsulfonyl)-2-nitrobenzoyl]-1,3-cyclohexanedione, in or on the raw agricultural commodities popcorn, sweet corn ears, sweet corn forage, and sweet corn stover at 0.01, 0.01, 0.50, and 2.0 parts per million (ppm); respectively. EPA has determined that the petitions contain data or information regarding the elements set forth in section 408(d)(2) of the FFDCA; however, EPA has not fully evaluated the sufficiency of the submitted data at this time or whether the data support granting of the petition. Additional data may be needed before EPA rules on the petitions.

A. Residue Chemistry

1. *Plant metabolism.* The nature of the residue of mesotrione in plants is

adequately understood. Mesotrione is rapidly and completely metabolized in corn. No single extract or component accounted for greater than 0.01 ppm in grain. Numerous components were characterized in forage and fodder, including the metabolite 2-amino-4-methylsulfonyl benzoic acid (AMBA) and its conjugates and 4-methylsulfonyl-2-nitrobenzoic acid (MNBA).

2. *Analytical method.* Adequate analytical methods (HPLC- fluorescence method and HPLV-MS-MS) are available for enforcement purposes.

3. *Magnitude of residues.* The appropriate number of field residue studies were conducted with popcorn and sweet corn grown in 12 states. These trials were conducted in the major U.S. growing areas for popcorn and sweet corn.

B. Toxicological Profile

A full description of the studies describing the toxicity, animal metabolism, metabolite toxicology, and endocrine disruption of mesotrione can be found in the posting for its first tolerances in the **Federal Register** of June 21, 2001 (66 FR 33187) (FRL–6787–7)

C. Aggregate Exposure

1. *Dietary exposure.* For purposes of assessing the potential dietary exposure under the proposed tolerance, Syngenta estimated aggregate exposure based on the theoretical maximum residue concentration (TMRC) in popcorn, field corn, and sweet corn. The TMRC is calculated by multiplying the proposed tolerance levels for corn by the consumption data which estimate the amount of the commodity consumed by various population subgroups. Exposure was calculated only for the chronic exposures, since EPA has previously determined that mesotrione is not acutely toxic and no toxic reference dose was selected.

i. *Food.* Chronic exposure to mesotrione is negligible. Syngenta has conservatively assumed that 100% of all popcorn, field, and sweet corn used for human consumption would contain tolerance level residues of mesotrione. The potential dietary exposure to mesotrione was calculated on the basis of the proposed tolerance of the LOQ, 0.01 ppm, in corn. Residues in milk, meat and eggs due to the feeding of popcorn, field, and sweet corn commodities are not expected and tolerances for milk, meat and eggs are not required. However, exposure estimates took into consideration the transfer of minute residues from feed commodities into meat and dairy products. Calculated on this basis, the dietary exposure of the general U.S. population to mesotrione would correspond to 2.5% of the chronic reference dose. The percent of the reference dose that will be utilized by dietary exposure to residues of mesotrione is 1.4% for nursing infants less than 1 year old, 5.8% for non-nursing infants and 6.2% for children 1 to 6 years old. It is concluded, there is reasonable certainty that no harm will result from the additional tolerances on popcorn, and sweet corn.

ii. *Drinking water.* Based on EPA's ''Interim Guidance for Conducting Drinking Water Exposure and Risk Assessments'' document (December 2, 1997), chronic drinking water levels of comparison (DWLOC) for mesotrione were calculated. The calculated DWLOCs for the U.S. population in general was 24.45 parts per billion (ppb). The most sensitive sub population was children between 1 to 6 years old with a chronic DWLOC of 6.96 ppb. The highly conservative model estimated water concentrations by FQPA Index Reservoir Screening Tool (FIRST) were 27 to 95 times lower than all the DWLOCs including the most sensitive group. It is, therefore, concluded that the potential impact of mesotrione residues in drinking water derived from either surface water or ground water on the aggregate risk to human health is negligible.

2. *Non-dietary exposure.* Mesotrione is not registered for any non-food use, and no significant non-dietary, non-occupational exposure is anticipated.

D. Cumulative Effects

Mesotrione is the only registered pesticide from the triketone chemical class, and mesotrione does not produce a toxic metabolite produced by other substances. For the purposes of this tolerance action, mesotrione does not have a common mechanism of toxicity with other substances.

E. Safety Determination

1. *U.S. population.* Mesotrione is not acutely toxic, no acute PAD has been selected, and no acute assessment is warranted. Under the most conservative estimates, the dietary exposure of the general U.S. population to mesotrione would be no more than 2.5% of the chronic reference dose. Highly conservative model estimated water concentrations by FIRST were 27 to 95 times lower than all the DWLOCs including the most sensitive group. It is, therefore, concluded that the potential impact of mesotrione residues derived from either dietary or water sources on the aggregate risk to human health is negligible.

2. *Infants and children.* EPA previously determined that there is quantitative evidence of increased susceptibility demonstrated in the oral prenatal developmental toxicity studies in rats, mice, and rabbits. Delayed ossification was seen in the fetuses at doses below those at which maternal toxic effects were noted. Maternal toxic effects in the rat were decreased body weight gain during treatment and decreased food consumption and in the rabbit, abortions and gastrointestinal (GI) effects. The Food Quality Protection Act (FQPA) 10x safety factor was retained. Syngenta has summarized new data in the popcorn, and sweet corn petition to support the position that the default FQPA safety factor of 10x should not be applied to mesotrione. There is direct evidence that has been accepted by EPA that the mouse is the most appropriate model for predicting potential effects of mesotrione-induced elevation of tyrosine in humans, based on the similarity of the key tyrosine catabolism enzyme, tyrosine aminotransferase (TAT), in mice and humans. Furthermore, there is direct evidence to indicate that all the biological processes needed to regulate tyrosine levels in neonates are developed at birth, and TAT levels are comparable to the degree of expression in adults. Therefore, there is no compelling evidence to indicate that developing organisms are more sensitive to mesotrione administration than adults.

F. International Tolerances

There are no codex maximum residue levels established for residues of mesotrione on popcorn, and sweet corn, nor are there maximum residue levels established in Canada or Mexico.

[FR Doc. 02–19804 Filed 8–6–02; 8:45 am]

BILLING CODE 6560–50–S

ENVIRONMENTAL PROTECTION AGENCY

[OPP–2002–0164; FRL–7189–9]

Pesticide Emergency Exemptions; Agency Decisions and State and Federal Agency Crisis Declarations

AGENCY: Environmental Protection Agency (EPA).

ACTION: Notice.

SUMMARY: EPA has granted or denied emergency exemptions under the Federal Insecticide, Fungicide, and Rodenticide Act (FIFRA) for use of pesticides as listed in this notice. The

exemptions or denials were granted during the period April 1, 2002 to June 30, 2002, to control unforseen pest outbreaks.

FOR FURTHER INFORMATION CONTACT: See each emergency exemption or denial for the name of a contact person. The following information applies to all contact persons: Team Leader, Emergency Response Team, Registration Division (7505C), Office of Pesticide Programs, Environmental Protection Agency, 1200 Pennsylvania Ave., NW., Washington, DC 20460; telephone number: (703) 308–9366.

SUPPLEMENTARY INFORMATION: EPA has granted or denied emergency exemptions to the following State and Federal agencies. The emergency exemptions may take the following form: Crisis, public health, quarantine, or specific. EPA has also listed denied emergency exemption requests in this notice.

I. General Information

A. Does this Action Apply to Me?

You may be potentially affected by this action if you petition EPA for authorization under section 18 of FIFRA to use pesticide products which are otherwise unavailable for a given use. Potentially affected categories and entities may include, but are not limited to:

Categories	NAICS codes	Examples of potentially affected entities
Federal Government State and Territorial government agencies charged with pesticide authority.	9241	Federal agencies that petition EPA for section 18 pesticide use authorization State agencies that petition EPA for section 18 pesticide use authorization

This listing is not intended to be exhaustive, but rather provides a guide for readers regarding entities likely to be regulated by this action. Other types of entities not listed in the table in this unit could also be regulated. The North American Industrial Classification System (NAICS) codes have been provided to assist you and others in determining whether or not this action applies to certain entities. If you have any questions regarding the applicability of this action to a particular entity, consult the person listed under **FOR FURTHER INFORMATION CONTACT**.

B. How Can I Get Additional Information or Copies of this Document or Other Documents?

1. *Electronically.* You may obtain electronic copies of this document, and certain other related documents that might be available electronically, from the EPA Internet Home Page at http://www.epa.gov/. To access this document, on the Home Page select ''Laws and Regulations,'' ''Regulations and Proposed Rules,'' and then look up the entry for this document under the ''**Federal Register**—Environmental Documents.'' You can also go directly to the **Federal Register** listings at http://www.epa.gov/fedrgstr/.

2. *In person.* The Agency has established an official record for this action under docket ID number OPP–2002–0164. The official record consists of the documents specifically referenced in this action, and other information related to this action, including any information claimed as Confidential Business Information (CBI). This official record includes the documents that are physically located in the docket, as well as the documents that are referenced in those documents. The public version of the official record does not include any information claimed as CBI. The public version of the official record, which includes printed, paper versions of any electronic comments submitted during an applicable comment period is available for inspection in the Public Information and Records Integrity Branch (PIRIB), Rm. 119, Crystal Mall #2, 1921 Jefferson Davis Hwy., Arlington, VA, from 8:30 a.m. to 4 p.m., Monday through Friday, excluding legal holidays. The PIRIB telephone number is (703) 305–5805.

II. Background

Under FIFRA section 18, EPA can authorize the use of a pesticide when emergency conditions exist. Authorizations (commonly called emergency exemptions) are granted to State and Federal agencies and are of four types:

1. A ''specific exemption'' authorizes use of a pesticide against specific pests on a limited acreage in a particular State. Most emergency exemptions are specific exemptions.

2. ''Quarantine'' and ''public health'' exemptions are a particular form of specific exemption issued for quarantine or public health purposes. These are rarely requested.

3. A ''crisis exemption'' is initiated by a State or Federal agency (and is confirmed by EPA) when there is insufficient time to request and obtain EPA permission for use of a pesticide in an emergency.

EPA may deny an emergency exemption: If the State or Federal agency cannot demonstrate that an emergency exists, if the use poses unacceptable risks to the environment, or if EPA cannot reach a conclusion that the proposed pesticide use is likely to result in ''a reasonable certainty of no harm'' to human health, including exposure of residues of the pesticide to infants and children.

If the emergency use of the pesticide on a food or feed commodity would result in pesticide chemical residues, EPA establishes a time-limited tolerance meeting the ''reasonable certainty of no harm standard'' of the Federal Food, Drug, and Cosmetic Act (FFDCA).

In this document: EPA identifies the State or Federal agency granted the exemption or denial, the type of exemption, the pesticide authorized and the pests, the crop or use for which authorized, number of acres (if applicable), and the duration of the exemption. EPA also gives the **Federal Register** citation for the time-limited tolerance, if any.

III. Emergency Exemptions and Denials

A. U. S. States and Territories

Arkansas

State Plant Board

Crisis: On May 29, 2002, for the use of sodium chlorate on wheat as a desiccant/defoliant. This program ended on/is expected to end on June 13, 2002. Contact: Libby Pemberton

Specific: EPA authorized the use of fomesafen on snap beans to control various weed species; April 1, 2002 to September 15, 2002. Contact: Andrea Conrath

EPA authorized the use of methoxyfenozide on soybeans to control saltmarsh caterpillars and armyworms; May 28, 2002 to October 30, 2002. Contact: Barbara Madden

EPA authorized the use of diuron on catfish ponds to control blue-green algae; June 11, 2002 to September 30, 2002. Contact: Libby Pemberton

California

Environmental Protection Agency, Department of Pesticide Regulation

Specific: EPA authorized the use of fludioxonil on pomegranates to control gray mold; August 1, 2002 to December 15, 2002. Contact: Andrew Ertman

EPA authorized the use of avermecton on basil to control leafminers; July 1, 2002 to October 31, 2002. This request was granted because emergency conditions still exist and there are no registered or unregistered alternatives available. Contact: Barbara Madden

EPA authorized the use of myclobutanil on artichoke to control

powdery mildew; August 18, 2002 to August 17, 2003. Contact: Barbara Madden

Colorado

Department of Agriculture

Crisis: On June 14, 2002, for the use of clopyralid on canola to control weeds. This program ended on/is expected to end on August 1, 2002. Contact: Libby Pemberton

Specific: EPA authorized the use of dimethenamid-p on sugar beets to control various nightshade species, lambsquarter, redroot pigweed, barnyardgrass and the suppression of ALS-resistant kochia ; April 9, 2002 to August 1, 2002. Contact: Barbara Madden

EPA authorized the use of sulfentrazone on chickpeas to control broadleaf weeds; April 24, 2002 to June 30, 2002. Contact: Andrew Ertman

EPA authorized the use of lambda-cyhalothrin on barley to control Russian wheat aphids; May 8, 2002 to July 15, 2002. Contact: Andrew Ertman

EPA authorized the use of tetraconazole on sugarbeet to control Cercospora; May 29, 2002 to September 30, 2002. Contact: Andrea Conrath

EPA authorized the use of sulfentrazone on potatoes to control broadleaf weeds; June 4, 2002 to July 1, 2002. Contact: Andrew Ertman

EPA authorized the use of propiconazole on dry beans to control rust; June 18, 2002 to August 31, 2002. Contact: Andrea Conrath

EPA authorized the use of tebuconazole on sunflowers to control rust; July 1, 2002 to August 25, 2002. Contact: Barbara Madden

Connecticut

Department of Environmental Protection

Public Health: EPA authorized the use of fipronil in a rodent bait box system to control immature blacklegged ticks which are vectors for Lyme disease. Lyme disease is a serious public health concern. Lyme disease is caused by the bacterium, Borrelia burgdorferi. These bacteria are transmitted to humans by the bite of infected deer ticks and cause more than 16,000 infections in the United States each year. Lyme disease is spread by the bite of ticks of the genus Ixodes that are infected with Borrelia burgdorferi.; April 26, 2002 to December 31, 2002. Contact: Barbara Madden

Specific: EPA authorized the use of thiophanate methyl on blueberries to control various fungal diseases; May 6, 2002 to September 30, 2002. Contact: Andrea Conrath

EPA authorized the use of imidacloprid on blueberries to control oriental beetles; May 15, 2002 to August 15, 2002. Contact: Andrew Ertman

Delaware

Department of Agriculture

Specific: EPA authorized the use of fomesafen on snap beans to control various weed species; April 1, 2002 to October 1, 2002. Contact: Andrea Conrath

EPA authorized the use of dimethomorph on cantaloupes, cucumbers, watermelons, and squash (summer, winter, and pumpkins) to control Phytophthora capsici; April 25, 2002 to September 30, 2002. Contact: Libby Pemberton

Florida

Department of Agriculture and Consumer Services

Specific: EPA authorized the use of carfentrazone-ethyl on fruiting vegetables (except cucurbits) to control Paraquat resistant nightshade, purslane and morningglory; May 31, 2002 to May 30, 2003. Contact: Barbara Madden

EPA authorized the use of fenbuconazole on blueberries to control Septoria leaf spot and rust; May 31, 2002 to May 30, 2003. Contact: Barbara Madden

EPA authorized the use of halosulfuron-methyl on tomatoes to control purple nutsedge (Cyperus rotundis L.) and yellow nutsedge (Cyperus esculentus L.); June 5, 2002 to June 4, 2003. Contact: Barbara Madden

Georgia

Department of Agriculture

Specific: EPA authorized the use of halosulfuron-methyl on tomatoes to control purple nutsedge (Cyperus rotundis L.) and yellow nutsedge (Cyperus esculentus L.); June 5, 2002 to June 4, 2003. Contact: Barbara Madden

Hawaii

Department of Agriculture

Specific: EPA authorized the use of hydramethylnon on pineapple to control big-headed and Argentine ants; May 31, 2002 to May 31, 2003. Contact: Libby Pemberton

Idaho

Department of Agriculture

Denial: On May 7, 2002 EPA denied the use of dimethenamid-p on potatoes to control hairy nightshade. This request was denied because the situation as described does not meet the criteria for an urgent, non-routine situation because an adequate alternative is available. Contact: Barbara Madden

Specific: EPA authorized the use of cymoxanil on hops to control downy mildew; April 3, 2002 to September 15, 2003. Contact: Libby Pemberton

EPA authorized the use of thiabendazole on lentils to control Ascochyta blight; April 23, 2002 to June 1, 2002. Contact: Andrea Conrath

EPA authorized the use of dimethenamid-p on sugar beets to control hairy nightshade, redroot pigweed, and yellow nutsedge; April 26, 2002 to July 15, 2002. Contact: Barbara Madden

EPA authorized the use of zinc phosphide on potato, sugarbeet, wheat, and barley to control mice and voles; May 6, 2002 to October 1, 2002. Contact: Libby Pemberton

EPA authorized the use of fluroxypyr on sweet corn and field corn to control volunteer potatoes; May 20, 2002 to August 1, 2002. Contact: Andrew Ertman

EPA authorized the use of lambda-cyhalothrin on barley to control Russian wheat aphids; May 22, 2002 to July 30, 2002. Contact: Andrew Ertman

EPA authorized the use of fenpyroximate on hops to control two-spotted spider mites; June 11, 2002 to September 15, 2002. Contact: Andrea Conrath

EPA authorized the use of clopyralid on canola to control Canada thistle; June 25, 2002 to July 31, 2002. Contact: Libby Pemberton

EPA authorized the use of myclobutanil on sugar beets to control powdery mildew; July 5, 2002 to September 15, 2002. Contact: Barbara Madden

Illinois

Department of Agriculture

Specific: EPA authorized the use of fomesafen on snap beans to control various weed species; April 1, 2002 to August 31, 2002. Contact: Andrea Conrath

EPA authorized the use of sulfentrazone on horseradish to control broadleaf weeds; April 15, 2002 to July 15, 2002. Contact: Andrew Ertman

Indiana

Office of Indiana State Chemist

Specific: EPA authorized the use of fomesafen on snap beans to control various weed species; May 6, 2002 to September 1, 2002. Contact: Andrea Conrath

Kansas

Department of Agriculture

Specific: EPA authorized the use of metsulfuron-methyl on sorghum to control various weed species; April 30, 2002 to July 31, 2002. Contact: Andrew Ertman

EPA authorized the use of thiophanate methyl on blueberries to control various fungal diseases; May 6, 2002 to September 30, 2002. Contact: Andrea Conrath

EPA authorized the use of propiconazole on sorghum to control sorghum ergot; June 13, 2002 to June 12, 2003. Contact: Barbara Madden

EPA authorized the use of propiconazole on dry beans to control rust; June 18, 2002 to August 15, 2002. Contact: Andrea Conrath

Louisiana
Department of Agriculture and Forestry
Crisis: EPA authorized the use of methoxyfenozide on soybeans to control saltmarsh caterpillars, armyworms, and soybean loopers; June 13, 2002 to September 30, 2002. Contact: Barbara Madden
Specific: EPA authorized the use of emamectin benzoate on cotton to control beet armyworm and tobacco budworm; June 21, 2002 to September 30, 2002. Contact: Andrea Conrath
Maine
Department of Agriculture, Food, and Rural Resources
Specific: EPA authorized the use of fomesafen on dry beans to control various weed species; May 6, 2002 to July 15, 2002. Contact: Andrea Conrath
EPA authorized the use of tebufenozide on pasture to control armyworms; June 28, 2002 to October 31, 2002. This request was granted because IR-4 is currently conducting residue field trials for use of methoxyfenozide on pasture to control armyworms. However, the state was granted the use of tebufenozide instead of methoxyfenozide due to history of successful use of tebufenozide to control armyworm in pastures; and Dow AgroSciences anticipates only a limited supply of methoxyfenozide would be available to treat pastures for the 2002 growing season. Contact: Barbara Madden
Maryland
Department of Agriculture
Specific: EPA authorized the use of fomesafen on snap beans to control various weed species; April 1, 2002 to September 15, 2002. Contact: Andrea Conrath
EPA authorized the use of terbacil on watermelons to control broadleaf weeds; April 4, 2002 to June 25, 2002. Contact: Dan Rosenblatt
Massachusetts
Massachusetts Department of Food and Agriculture
Specific: EPA authorized the use of fenbuconazole on blueberries to control Mummyberry disease; May 17, 2002 to June 30, 2002. Contact: Barbara Madden
Michigan
Michigan Department of Agriculture
Specific: EPA authorized the use of dimethomorph on cantaloupes, cucumbers, watermelons, and squash (summer, winter, and pumpkins) to control Phytophthora capsici; April 9, 2002 to November 1, 2002. Contact: Libby Pemberton
EPA authorized the use of thiophanate methyl on blueberries to control various fungal diseases; May 6, 2002 to September 30, 2002. Contact: Andrea Conrath
EPA authorized the use of fomesafen on dry beans to control various weed species; May 6, 2002 to August 15, 2002. Contact: Andrea Conrath
EPA authorized the use of fomesafen on snap beans to control various weed species; May 6, 2002 to August 30, 2002. Contact: Andrea Conrath
EPA authorized the use of tebuconazole on asparagus to control rust; May 7, 2002 to November 1, 2002. Contact: Barbara Madden
EPA authorized the use of tebuconazole on wheat to control Fusarium head blight; May 17, 2002 to June 15, 2002. Contact: Barbara Madden
EPA authorized the use of tetraconazole on sugarbeet to control Cercospora; May 29, 2002 to September 30, 2002. Contact: Andrea Conrath
Minnesota
Department of Agriculture
Specific: EPA authorized the use of fomesafen on dry beans to control various weed species; April 1, 2002 to August 15, 2002. Contact: Andrea Conrath
EPA authorized the use of dimethenamid-p on sugar beets to control waterhemp and Powell amaranth; April 9, 2002 to August 1, 2002. Contact: Barbara Madden
EPA authorized the use of sulfentrazone on horseradish to control broadleaf weeds; April 15, 2002 to July 15, 2002. Contact: Andrew Ertman
EPA authorized the use of propiconazole on dry beans to control rust; June 18, 2002 to August 31, 2002. Contact: Andrea Conrath
Mississippi
Department of Agriculture and Commerce
Specific: EPA authorized the use of methoxyfenozide on soybeans to control saltmarsh caterpillars and armyworms; May 28, 2002 to October 30, 2002. Contact: Barbara Madden
EPA authorized the use of methoxyfenozide on field corn to control Southwestern corn borer; July 1, 2002 to September 30, 2002. Contact: Barbara Madden
Missouri
Department of Agriculture
Specific: EPA authorized the use of fomesafen on snap beans to control various weed species; April 1, 2002 to September 10, 2002. Contact: Andrea Conrath
Montana
Department of Agriculture
Specific: EPA authorized the use of clopyralid on canola to control Canada thistle and perennial sowthistle; April 9, 2002 to July 31, 2002. Contact: Libby Pemberton
EPA authorized the use of sulfentrazone on chickpeas and dried peas to control kochia; April 9, 2002 to June 30, 2002. Contact: Andrew Ertman
EPA authorized the use of thiabendazole on lentils to control Ascochyta blight; April 10, 2002 to June 1, 2002. Contact: Andrea Conrath
EPA authorized the use of lambda-cyhalothrin on barley to control cutworms; May 22, 2002 to July 1, 2002. Contact: Andrew Ertman
EPA authorized the use of sethoxydim on safflower to control wild oats; June 28, 2002 to July 31, 2002. Contact: Libby Pemberton
Nebraska
Department of Agriculture
Specific: EPA authorized the use of dimethenamid-p on sugar beets to control nightshade, redroot pigweed and ALS-resistant kochia; April 9, 2002 to August 1, 2002. Contact: Barbara Madden
EPA authorized the use of sulfentrazone on chickpeas to control broadleaf weeds; April 12, 2002 to July 1, 2002. Contact: Andrew Ertman
EPA authorized the use of metsulfuron-methyl on sorghum to control various weed species; April 30, 2002 to August 15, 2002. Contact: Andrew Ertman
EPA authorized the use of sulfentrazone on potatoes to control broadleaf weeds; May 21, 2002 to July 1, 2002. Contact: Andrew Ertman
EPA authorized the use of tetraconazole on sugarbeet to control Cercospora; May 29, 2002 to September 30, 2002. Contact: Andrea Conrath
Nevada
Department of Agriculture
Denial: On June 4, 2002 EPA denied the use of bromoxynil on pasture to control weeds. This request was denied because the situation, as described did not meet the criteria for an urgent, non-routine situation. The situation appears to be a chronic weed control situation. Contact: Barbara Madden
New Hampshire
Department of Agriculture
Specific: EPA authorized the use of propiconazole on blueberries to control mummyberry disease; May 24, 2002 to June 30, 2002. Contact: Barbara Madden
New Jersey
Department of Environmental Protection
Public Health: EPA authorized the use of fipronil in a rodent bait box system to control immature blacklegged ticks which are vectors for Lyme disease. Lyme disease is a serious public health concern. Lyme disease is caused by the bacterium, Borrelia burgdorferi. These bacteria are transmitted to humans by the bite of infected deer ticks and cause more than 16,000 infections in the United States each year. Lyme disease is spread by the bite of ticks of the genus

Ixodes that are infected with Borrelia burgdorferi. May 8, 2002 to December 31, 2002. Contact: Barbara Madden
Specific: EPA authorized the use of dimethomorph on cantaloupes, cucumbers, watermelons, and squash (summer, winter, and pumpkins) to control Phytophthora capsici; April 25, 2002 to October 31, 2002. Contact: Libby Pemberton

EPA authorized the use of thiophanate methyl on blueberries to control various fungal diseases; May 6, 2002 to September 30, 2002. Contact: Andrea Conrath

EPA authorized the use of imidacloprid on blueberries to control blueberry aphids; May 7, 2002 to August 10, 2002. Contact: Andrew Ertman

EPA authorized the use of imidacloprid on blueberries to control oriental beetles; May 15, 2002 to September 15, 2002. Contact: Andrew Ertman

EPA authorized the use of clopyralid on cranberries to control wild bean; May 23, 2002 to December 1, 2002. Contact: Libby Pemberton

EPA authorized the use of fludioxonil on peaches and nectarines to control brown rot, gray mold, and Rhizopus rot; July 1, 2002 to September 30, 2002. Contact: Andrew Ertman

New Mexico

Department of Agriculture
Specific: EPA authorized the use of emamectin benzoate on cotton to control beet armyworm; May 13, 2002 to October 31, 2002. Contact: Andrea Conrath

EPA authorized the use of spinosad on alfalfa to control beet armyworms; May 17, 2002 to November 1, 2002. Contact: Andrew Ertman

EPA authorized the use of spinosad on peanuts to control lepidopteran larvae; June 15, 2002 to October 30, 2002. Contact: Andrew Ertman

EPA authorized the use of myclobutanil on peppers to control powdery mildew; July 1, 2002 to October 15, 2002. Contact: Barbara Madden

New York

Department of Environmental Conservation
Public Health: EPA authorized the use of fipronil in a rodent bait box system to control immature blacklegged ticks which are vectors for Lyme disease. Lyme disease is a serious public health concern. Lyme disease is caused by the bacterium, Borrelia burgdorferi. These bacteria are transmitted to humans by the bite of infected deer ticks and cause more than 16,000 infections in the United States each year. Lyme disease is spread by the bite of ticks of the genus Ixodes that are infected with Borrelia burgdorferi. June 7, 2002 to December 31, 2002. Contact: Barbara Madden
Specific: EPA authorized the use of fomesafen on snap and dry beans to control various weed species; April 1, 2002 to August 30, 2002. Contact: Andrea Conrath

EPA authorized the use of thiophanate methyl on blueberries to control various fungal diseases; May 6, 2002 to September 30, 2002. Contact: Andrea Conrath

North Dakota

Department of Agriculture
Crisis: On May 31, 2002, for the use of zeta-cypermethrin on mustard to control crucifer flea beetles. This program ended on/is expected to end on June 14, 2002. Contact: Libby Pemberton
Specific: EPA authorized the use of fomesafen on dry beans to control various weed species; April 1, 2002 to August 15, 2002. Contact: Andrea Conrath

EPA authorized the use of sulfentrazone on flax to control kochia and ALS-resistant kochia; April 1, 2002 to June 30, 2002. Contact: Andrew Ertman

EPA authorized the use of dimethenamid-p on sugar beets to control waterhemp and Powell amaranth; April 9, 2002 to August 1, 2002. Contact: Barbara Madden

EPA authorized the use of thiabendazole on lentils to control Ascochyta blight; April 10, 2002 to June 1, 2002. Contact: Andrea Conrath

EPA authorized the use of clopyralid on flax to control Canada thistle and perennial sowthistle; May 10, 2002 to July 31, 2002. Contact: Libby Pemberton

EPA authorized the use of sethoxydim on no till or reduced tillage safflower to control wild oat; May 29, 2002 to July 31, 2002. Contact: Libby Pemberton

EPA authorized the use of propiconazole on dry beans to control rust; June 18, 2002 to August 31, 2002. Contact: Andrea Conrath

Ohio

Department of Agriculture
Specific: EPA authorized the use of thiophanate methyl on blueberries to control various fungal diseases; May 6, 2002 to September 30, 2002. Contact: Andrea Conrath

Oklahoma

Department of Agriculture
Specific: EPA authorized the use of fomesafen on snap beans to control various weed species; April 1, 2002 to September 10, 2002. Contact: Andrea Conrath

EPA authorized the use of emamectin benzoate on cotton to control beet armyworm; May 13, 2002 to October 31, 2002. Contact: Andrea Conrath

EPA authorized the use of spinosad on peanuts to control lepidopteran larvae; June 15, 2002 to October 30, 2002. Contact: Andrew Ertman

Oregon

Department of Agriculture
Specific: EPA authorized the use of cymoxanil on hops to control downy mildew; April 3, 2002 to September 15, 2003. Contact: Libby Pemberton

EPA authorized the use of thiabendazole on lentils to control Ascochyta blight; April 10, 2002 to June 1, 2002. Contact: Andrea Conrath

EPA authorized the use of cyprodinil and fludioxonil on caneberries to control gray mold; April 19, 2002 to September 15, 2002. Contact: Libby Pemberton

EPA authorized the use of halosulfuron-methyl on asparagus to control yellow nutsedge; April 25, 2002 to July 15, 2002. Contact: Andrew Ertman

EPA authorized the use of dimethenamid-p on sugar beets to control hairy nightshade, redroot pigweed, and yellow nutsedge; April 26, 2002 to July 15, 2002. Contact: Barbara Madden

EPA authorized the use of triazamate on true fir Christmas trees to control root aphids; May 9, 2002 to October 31, 2002. Contact: Barbara Madden

EPA authorized the use of fluroxypyr on sweet corn and field corn to control volunteer potatoes; May 13, 2002 to August 1, 2002. Contact: Andrew Ertman

EPA authorized the use of tebuconazole on hops to control powdery mildew; June 15, 2002 to September 22, 2002. Contact: Barbara Madden

EPA authorized the use of clopyralid on canola to control Canada thistle; June 25, 2002 to July 31, 2002. Contact: Libby Pemberton

EPA authorized the use of myclobutanil on sugar beets to control powdery mildew; July 5, 2002 to September 15, 2002. Contact: Barbara Madden

Pennsylvania

Department of Agriculture
Specific: EPA authorized the use of thiophanate methyl on blueberries to control various fungal diseases; May 6, 2002 to September 30, 2002. Contact: Andrea Conrath

Rhode Island

Department of Environmental Management
Specific: EPA authorized the use of propiconazole on blueberries to control mummyberry disease; May 24, 2002 to June 30, 2002. Contact: Barbara Madden

South Carolina

Clemson University
Specific: EPA authorized the use of fludioxonil on peaches, nectarines, and

plums to control brown rot; May 1, 2002 to September 15, 2003. Contact: Andrew Ertman

South Dakota

Department of Agriculture

Specific: EPA authorized the use of sulfentrazone on chickpeas and dried peas to control kochia; April 9, 2002 to June 30, 2002. Contact: Andrew Ertman

EPA authorized the use of tebuconazole on wheat and barley to control Fusarium head blight; May 17, 2002 to August 31, 2002. Contact: Barbara Madden

Tennessee

Department of Agriculture

Specific: EPA authorized the use of sulfentrazone on lima beans and cowpeas to control hophornbeam copperleaf; May 30, 2002 to September 30, 2003. Contact: Barbara Madden

Texas

Department of Agriculture

Specific: EPA authorized the use of emamectin benzoate on cotton to control beet armyworm; May 13, 2002 to October 31, 2002. Contact: Andrea Conrath

EPA authorized the use of spinosad on alfalfa to control beet armyworms; May 17, 2002 to November 1, 2002. Contact: Andrew Ertman

EPA authorized the use of spinosad on peanuts to control lepidopteran larvae; June 15, 2002 to October 30, 2002. Contact: Andrew Ertman

Utah

Department of Agriculture

Specific: EPA authorized the use of myclobutanil on sugar beets to control powdery mildew; April 26, 2002 to September 15, 2002. Contact: Barbara Madden

Vermont

Department of Agriculture

Specific: EPA authorized the use of fenbuconazole on blueberry to control mummy berry disease; June 4, 2002 to September 1, 2002. Contact: Andrea Conrath

EPA authorized the use of tebufenozide on pasture to control armyworms; June 28, 2002 to October 31, 2002. This request was granted because IR-4 is currently conducting residue field trials for use of methoxyfenozide on pasture to control armyworms. However, the state was granted the use of tebufenozide instead of methoxyfenozide due to history of successful use of tebufenozide to control armyworm in pastures; and Dow AgroSciences anticipates only a limited supply of methoxyfenozide would be available to treat pastures for the 2002 growing season. Contact: Barbara Madden

Virginia

Department of Agriculture and Consumer Services

Specific: EPA authorized the use of fomesafen on snap beans to control various weed species; April 1, 2002 to September 20, 2002. Contact: Andrea Conrath

EPA authorized the use of terbacil on watermelons to control broadleaf weeds; April 4, 2002 to July 10, 2002. Contact: Dan Rosenblatt

EPA authorized the use of s-metolachlor on spinach to control weeds; April 4, 2002 to December 31, 2002. Contact: Andrew Ertman

EPA authorized the use of coumaphos in beehives to control varroa mites and small hive beetles; April 5, 2002 to February 1, 2003. Contact: Barbara Madden

EPA authorized the use of imidacloprid on peaches, nectarines and apricots to control aphids; April 9, 2002 to October 1, 2002. Contact: Andrew Ertman

EPA authorized the use of halosulfuron-methyl on tomatoes to control purple nutsedge and yellow nutsedge; June 19, 2002 to June 18, 2003. Contact: Barbara Madden

Washington

Department of Agriculture

EPA authorized the use of thiabendazole on lentils to control Ascochyta blight; April 10, 2002 to June 1, 2002. Contact: Andrea Conrath

EPA authorized the use of halosulfuron-methyl on asparagus to control yellow nutsedge; April 25, 2002 to July 15, 2002. Contact: Andrew Ertman

Specific: EPA authorized the use of cyprodinil and fludioxonil on caneberries to control gray mold; May 1, 2002 to September 15, 2002. Contact: Libby Pemberton

EPA authorized the use of triazamate on true fir Christmas trees to control root aphids; May 9, 2002 to October 31, 2002. Contact: Barbara Madden

EPA authorized the use of fluroxypyr on sweet corn and field corn to control volunteer potatoes; May 13, 2002 to August 1, 2002. Contact: Andrew Ertman

EPA authorized the use of fenpyroximate on hops to control two-spotted spider mites; June 11, 2002 to September 15, 2002. Contact: Andrea Conrath

EPA authorized the use of propiconazole on cranberry to control cotton ball disease; June 14, 2002 to July 31, 2002. Contact: Andrea Conrath

EPA authorized the use of tebuconazole on hops to control powdery mildew; June 15, 2002 to September 22, 2002. Contact: Barbara Madden

EPA authorized the use of clopyralid on canola to control Canada thistle; June 25, 2002 to July 31, 2002. Contact: Libby Pemberton

West Virginia

Department of Agriculture

Specific: EPA authorized the use of imidacloprid on peaches and nectarines to control aphids; April 9, 2002 to November 30, 2002. Contact: Andrew Ertman

EPA authorized the use of coumaphos in beehives to control varroa mites and small hive beetles; June 17, 2002 to February 1, 2003. Contact: Barbara Madden

Wisconsin

Department of Agriculture, Trade, and Consumer Protection

Specific: EPA authorized the use of dimethomorph on cucumbers and pumpkins to control Phytophthora capsici; April 10, 2002 to September 30, 2002. Contact: Libby Pemberton

EPA authorized the use of sulfentrazone on horseradish to control broadleaf weeds; April 15, 2002 to July 15, 2002. Contact: Andrew Ertman

EPA authorized the use of sulfentrazone on strawberries to control common groundsel; June 20, 2002 to December 15, 2002. Contact: Barbara Madden

Wyoming

Department of Agriculture

Specific: EPA authorized the use of lambda-cyhalothrin on barley to control Russian wheat aphids; May 22, 2002 to July 31, 2002. Contact: Andrew Ertman

B. Federal Departments and Agencies

Agriculture Department

Animal and Plant Health Inspector Service

Crisis: On April 9, 2002, for the use of sodium carbonate, sodium hydroxide or sodium hypochlorite on various items including but not limited to aircraft surfaces, semen containers, regulated garbage, laboratory buildings, biological safety cabinets, animal isolation rooms, necropsy suites, and ancillary equipment for the control of exotic animal disease pathogens in various locations throughout the United States. These programs are expected to end on June 21, 2005. Contact: Barbara Madden

On April 25, 2002, for the use of potassium peroxymonosulfate and sodium chloride on clothing and various equipment to control avian influenza. This program is expected to end on May 8, 2005. Contact: Libby Pemberton

Quarantine: EPA authorized the use of sodium carbonate, sodium hydroxide or sodium hypochlorite on various items including but not limited to aircraft surfaces, semen containers, regulated garbage, laboratory buildings, biological safety cabinets, animal isolation rooms,

necropsy suites, and ancillary equipment for the control of exotic animal disease pathogens in various locations throughout the United States; June 21, 2002, to June 21, 2005. Contact: Barbara Madden

List of Subjects

Environmental protection, Pesticides and pest.

Dated: July 25, 2002.

Peter Caulkins,

Acting Director, Registration Division, Office of Pesticide Programs.

[FR Doc. 02–19802 Filed 8–6–02; 8:45 am]

BILLING CODE 6560–50–S

ENVIRONMENTAL PROTECTION AGENCY

[OPP–2002–0127; FRL–7188–9]

Availability of the Tolerance Reassessment Decision (TRED) for Trichlorfon

AGENCY: Environmental Protection Agency (EPA).

ACTION: Notice.

SUMMARY: This notice announces the availability of the tolerance reassessment decision document for trichlorfon. The trichlorfon document, referred to as a TRED, is the Agency's Report of the Food Quality Protection Act (FQPA) Tolerance Reassessment Progress and Interim Risk Management Decision for Trichlorfon. The documents have been developed using a public participation process designed by EPA and the U.S. Department of Agriculture (USDA) to involve the public in the reassessment of pesticide tolerances under the FQPA and the reregistration of individual organophosphates (OPs) under the Federal Insecticide, Fungicide, and Rodenticide Act (FIFRA).

DATES: EPA is maintaining an open docket for trichloron under docket ID number, OPP–2002–0127. The Agency will place any new comments there for future consideration. To ensure proper receipt by EPA, it is imperative that you identify docket ID number OPP–2002–0127 in the subject line on the first page of your response.

ADDRESSES: Comments may be submitted by mail, electronically, or in person. Please follow the detailed instructions for each method as provided in Unit I. of the **SUPPLEMENTARY INFORMATION.** To ensure proper receipt by EPA, it is imperative that you identify docket ID number OPP–2002–0127 in the subject line on the first page of your response.

FOR FURTHER INFORMATION CONTACT: By mail: Kylie Rothwell, Special Review and Reregistration Division (7508C), Office of Pesticide Programs, Environmental Protection Agency, 1200 Pennsylvania Ave., NW., Washington, DC 20460; telephone number: (703) 308–8055; e-mail address: rothwell.kylie@epa.gov.

SUPPLEMENTARY INFORMATION:

I. General Information

A. Does this Action Apply to Me?

This action is directed to the public in general. This action may, however, be of interest to persons who are or may be required to conduct testing of chemical substances under FIFRA or the Federal Food, Drug, and Cosmetic Act (FFDCA); environmental, human health, and agricultural advocates; pesticides users; and members of the public interested in the use of pesticides. Since other entities may also be interested, the Agency has not attempted to describe all the specific entities that may be affected by this action. If you have any questions regarding the applicability of this action to a particular entity, consult the person listed under **FOR FURTHER INFORMATION CONTACT.**

B. How Can I Get Additional Information, Including Copies of this Document and Other Related Documents?

1. *Electronically.*You may obtain electronic copies of this document, and certain other related documents that might be available electronically, from the EPA Internet Home Page at http://www.epa.gov/. To access this document, on the Home Page select ''Laws and Regulations,'' ''Regulations and Proposed Rules,'' and then look up the entry for this document under the ''**Federal Register**—Environmental Documents.'' You can also go directly to the **Federal Register** listings at http://www.epa.gov/fedrgstr/.

To access reregistration eligibility decision (RED) documents and fact sheets electronically, go directly to the documents on TREDs table on EPA's Office of Pesticide Programs Home Page, at http://www.epa.gov/pesticides/reregistration.

2. *In person.* The Agency has established an official record for this action under docket ID number OPP–2002–0127. The official record consists of the documents specifically referenced in this action, and other information related to this action, including any information claimed as Confidential Business Information (CBI). This official record includes the documents that are physically located in the docket, as well as the documents that are referenced in those documents. The public version of the official record does not include any information claimed as CBI. The public version of the official record, which includes printed, paper versions of any electronic comments submitted during an applicable comment period is available for inspection in the Public Information and Records Integrity Branch (PIRIB), Rm. 119, Crystal Mall #2, 1921 Jefferson Davis Hwy., Arlington, VA, from 8:30 a.m. to 4 p.m., Monday through Friday, excluding legal holidays. The PIRIB telephone number is (703) 305–5805.

C. How and to Whom Do I Submit Comments?

You may submit comments through the mail, in person, or electronically. To ensure proper receipt by EPA, it is imperative that you identify docket ID number OPP–2002–0127 in the subject line on the first page of your response.

1. *By mail.* Submit your comments to: Public Information and Records Integrity Branch (PIRIB), Information Resources and Services Division (7502C), Office of Pesticide Programs (OPP), Environmental Protection Agency, 1200 Pennsylvania Ave., NW., Washington, DC 20460.

2. *In person or by courier.* Deliver your comments to: Public Information and Records Integrity Branch (PIRIB), Information Resources and Services Division (7502C), Office of Pesticide Programs (OPP), Environmental Protection Agency, Rm. 119, Crystal Mall #2, 1921 Jefferson Davis Hwy., Arlington, VA. The PIRIB is open from 8:30 a.m. to 4 p.m., Monday through Friday, excluding legal holidays. The PIRIB telephone number is (703) 305–5805.

D. How Should I Handle CBI That I Want to Submit to the Agency?

Do not submit any information electronically that you consider to be CBI. You may claim information that you submit to EPA in response to this document as CBI by marking any part or all of that information as CBI. Information so marked will not be disclosed except in accordance with procedures set forth in 40 CFR part 2. In addition to one complete version of the comment that includes any information claimed as CBI, a copy of the comment that does not contain the information claimed as CBI must be submitted for inclusion in the public version of the official record. Information not marked confidential will be included in the public version

of the official record without prior notice. If you have any questions about CBI or the procedures for claiming CBI, please consult the person listed under **FOR FURTHER INFORMATION CONTACT**.

E. What Should I Consider as I Prepare My Comments for EPA?

You may find the following suggestions helpful for preparing your comments:

1. Explain your views as clearly as possible.
2. Describe any assumptions that you used.
3. Provide copies of any technical information and/or data you used that support your views.
4. If you estimate potential burden or costs, explain how you arrived at the estimate that you provide.
5. Provide specific examples to illustrate your concerns.
6. Offer alternative ways to improve the notice or collection activity.
7. Make sure to submit your comments by the deadline in this document.
8. To ensure proper receipt by EPA, be sure to identify the docket ID number assigned to this action in the subject line on the first page of your response. You may also provide the name, date, and **Federal Register**citation.

II. What Action is the Agency Taking?

These documents were developed using the OP public participation process. The process was designed to increase transparency and maximize stakeholder involvement, and provides numerous opportunities for public comment. EPA has also conducted extensive outreach to affected parties. EPA is taking this action without a formal comment period. The public participation process for trichlorfon provided opportunities for public comment as EPA developed these decisions. To read more about the OP public participation process, see http://www.epa.gov/pesticides/op/process.htm. Below is a brief summary of EPA's interim decisions, which are fully described in the TRED or interim reregistration eligibility decision (IRED) documents.

A. Trichlorfon Decision

EPA has reassessed risks from non-occupational exposure to trichlorfon through food, drinking water, and residential uses. Trichlorfon is not expected to pose risk concerns for these exposures provided that risk mitigation measures identified in the TRED for trichlorfon are adopted. Under the FQPA, EPA must review tolerances and tolerance exemptions that were already in effect when Congress enacted the FQPA in August 1996, to ensure that existing pesticide residue limits for food and feed commodities meet the safety standard of the new law. EPA completed a RED for trichlorfon in September 1995, prior to FQPA enactment, and therefore needed an updated assessment to consider the provisions of the Act. In reviewing these tolerances, the Agency must consider, among other things, aggregate risks from non-occupational sources of pesticide exposure, whether there is increased susceptibility to infants and children, and the cumulative effects of pesticides with a common mechanism of toxicity. Once the Agency has considered the cumulative risks for the OPs, tolerances for trichlorfon will be reassessed in that light.

The Agency also reevaluated the occupational risks for trichlorfon, based on newly submitted data associated with the current non-agricultural uses. Risk mitigation measures to be implemented for these uses included:

1. Limiting application of trichlorfon to tees and greens of golf course turf.
2. Cancelling foliar application of trichlorfon to ornamental plants (only direct application to soil is allowed).
3. Allowing only truck-drawn spraying of large ponds for ornamentals and bait fish, and requiring an on-off switch inside the truck cab.

B. Next steps

EPA's next step under FQPA is to consider a cumulative risk assessment and risk management decision for the OP pesticides, which share a common mechanism of toxicity. Because the Agency has not yet considered the cumulative risks for the OPs, the Agency's interim decisions do not fully satisfy the reassessment of the existing food residue tolerances as required by FQPA. When the Agency has considered the cumulative risks for the OPs, then the tolerances for OP pesticides will be reassessed in this light. At that time, the Agency will complete the FQPA requirements for the OPs and, where required, make final REDs, which may include further risk mitigation measures.

List of Subjects

Environmental protection, Chemicals, Pesticides and pests.

Dated: July 29, 2002.

Lois A. Rossi,

Director, Special Review and Reregistration Division, Office of Pesticide Programs.

[FR Doc. 02–19694 Filed 8–6–02; 8:45 am]

BILLING CODE 6560–50–S

FEDERAL COMMUNICATIONS COMMISSION

Notice of Public Information Collection(s) Being Reviewed by the Federal Communications Commission

July 29, 2002.

SUMMARY: The Federal Communications Commission, as part of its continuing effort to reduce paperwork burden invites the general public and other Federal agencies to take this opportunity to comment on the following information collection(s), as required by the Paperwork Reduction Act of 1995, Public Law 104–13. An agency may not conduct or sponsor a collection of information unless it displays a currently valid control number. No person shall be subject to any penalty for failing to comply with a collection of information subject to the Paperwork Reduction Act (PRA) that does not display a valid control number. Comments are requested concerning whether the proposed collection of information is necessary for the proper performance of the functions of the Commission, including whether the information shall have practical utility; the accuracy of the Commission's burden estimate; ways to enhance the quality, utility, and clarity of the information collected; and ways to minimize the burden of the collection of information on the respondents, including the use of automated collection techniques or other forms of information technology.

DATES: Written comments should be submitted on or before September 6, 2002. If you anticipate that you will be submitting comments, but find it difficult to do so within the period of time allowed by this notice, you should advise the contact listed below as soon as possible.

ADDRESSES: Direct all comments to Judith Boley Herman, Federal Communications Commission, Room 1–C804, 445 12th Street, SW., DC 20554 or via the Internet to *jboley@fcc.gov.*

FOR FURTHER INFORMATION CONTACT: For additional information or copies of the information collection(s), contact Judith Boley Herman at 202–418–0214 or via the Internet at *jboley@fcc.gov.*

SUPPLEMENTARY INFORMATION:

OMB Control No.: 3060–0463.

Title: Telecommunications Services for Individuals with Hearing and Speech Disabilities and te American with Disabilities Act of 1990, 47 CFR part 64 (Sections 64.601–64.605).

Form No.: N/A.

Type of Review: Extension of a currently approved collection.

Respondents: Business or other for-profit, and state, local, and tribal government.

Number of Respondents: 5,052.

Estimated Time Per Response: 5.31 hours (average burden per response).

Frequency of Response: On occasion, annual, and ever five year reporting requirements, recordkeeping requirement, and third party disclosure requirement.

Total Annual Burden: 26,831 hours.

Total Annual Cost: N/A.

Needs and Uses: The Commission adopted cost-recovery guidelines to telecommunications relay services (TRS), speech-to-speech relay services (STS), and video relay services (VRS). These guidelines are based, in part, on the recommendation of the Interstate TRS Advisory Council and the TRS Fund Administrator (Advisory Council and Fund Administrator, respectively). In the Further Notice of Proposed Rulemaking that was adopted and released on December 21, 2001, in CC Docket No. 98–67, the Commission solicited comment on the recommendations submitted by the Advisory Council and the Fund Administrator relating to the appropriate permanent cost recovery mechanism for VRS. The Commission is submitting this information collection to extend the OMB to obtain the full three-year approval with no change.

Federal Communications Commission.

Marlene H. Dortch,

Secretary.

[FR Doc. 02–19882 Filed 8–6–02; 8:45 am]

BILLING CODE 6712–01–P

FEDERAL COMMUNICATIONS COMMISSION

Notice of Public Information Collection(s) Being Reviewed by the Federal Communications Commission for Extension Under Delegated Authority, Comments Requested

July 29, 2002.

SUMMARY: The Federal Communications Commission, as part of its continuing effort to reduce paperwork burden invites the general public and other Federal agencies to take this opportunity to comment on the following information collection(s), as required by the Paperwork Reduction Act of 1995, Public Law 104–13. An agency may not conduct or sponsor a collection of information unless it displays a currently valid control number. No person shall be subject to any penalty for failing to comply with a collection of information subject to the Paperwork Reduction Act (PRA) that does not display a valid control number. Comments are requested concerning whether the proposed collection of information is necessary for the proper performance of the functions of the Commission, including whether the information shall have practical utility; the accuracy of the Commission's burden estimate; ways to enhance the quality, utility, and clarity of the information collected; and ways to minimize the burden of the collection of information on the respondents, including the use of automated collection techniques or other forms of information technology.

DATES: Persons wishing to comment on this information collection should submit comments October 7, 2002. If you anticipate that you will be submitting comments, but find it difficult to do so within the period of time allowed by this notice, you should advise the contact listed below as soon as possible.

ADDRESSES: Direct all comments to Judy Boley Herman, Federal Communications Commission, 445 12th Street, SW, Room 1–C804, Washington, DC 20554 or via the Internet to *jboley@fcc.gov.*

FOR FURTHER INFORMATION CONTACT: For additional information or copies of the information collections contact Judy Boley Herman at 202–418–0214 or via the Internet at *jboley@fcc.gov.*

SUPPLEMENTARY INFORMATION:

OMB Control No.: 3060–0683.

Title: Direct Broadcast Satellite Service.

Form No.: N/A.

Type of Review: Extension of a currently approved collection.

Respondents: Business or other for-profit.

Number of Respondents: 6 respondents; 35 responses.

Estimated Time Per Response: 1.5–20 hours.

Frequency of Response: On occasion, one-time, and annual reporting requirements, and recordkeeping requirement.

Total Annual Burden: 3,200 hours.

Annual Reporting and Recordkeeping Cost Burden: $50,000.

Needs and Uses: The Commission sought and received emergency clearance of this information collection on 7/26/02. The Commission is now initiating a 60-day comment period to extend this collection with no change for the regular, three-year approval.

This information collection, among other things, previously modified Direct Broadcast Satellite (DBS) to Part 25 of the Commission's rules, and eliminated Part 100 of the Commission's rules. These revisions were necessary to simplify the procedures applicable to DBS, to eliminate unnecessary filing requirements, and to harmonize the DBS licensing process with that of other satellite services.

Federal Communications Commission.

Marlene H. Dortch,

Secretary.

[FR Doc. 02–19883 Filed 8–6–02; 8:45 am]

BILLING CODE 6712–01–P

FEDERAL COMMUNICATIONS COMMISSION

Notice of Public Information Collection(s) Being Submitted to OMB for Review and Approval

July 29, 2002.

SUMMARY: The Federal Communications Commissions, as part of its continuing effort to reduce paperwork burden invites the general public and other Federal agencies to take this opportunity to comment on the following information collection, as required by the Paperwork Reduction Act of 1995, Public Law 104–13. An agency may not conduct or sponsor a collection of information unless it displays a currently valid control number. No person shall be subject to any penalty for failing to comply with a collection of information subject to the Paperwork Reduction Act (PRA) that does not display a valid control number. Comments are requested concerning whether the proposed collection of information is necessary for the proper performance of the functions of the Commission, including whether the information shall have practical utility; the accuracy of the Commission's burden estimate; ways to enhance the quality, utility, and clarity of the information collected; and ways to minimize the burden of the collection of information on the respondents, including the use of automated collection techniques or other forms of information technology.

DATES: Written comments should be submitted on or before September 6, 2002. If you anticipate that you will be submitting comments, but find it difficult to do so within the period of time allowed by this notice, you should advise the contact listed below as soon as possible.

ADDRESSES: Direct all comments to Les Smith, Federal Communications Commission, Room 1–A804, 445 12th Street, SW., Washington, DC 20554 or via the Internet to *lesmith@fcc.gov.*

FOR FURTHER INFORMATION CONTACT: For additional information or copies of the information collections contact Les

Smith at (202) 418–0217 or via the Internet at *lesmith@fcc.gov.*

SUPPLEMENTARY INFORMATION:

OMB Control Number: 3060–0174.

Title: Section 73.1212, Sponsorship Identification; List Retention; Related Requirements.

Form Number: N/A.

Type of Review: Extension of a currently approved collection.

Respondents: Individuals or households; Business or other for-profit entities.

Number of Respondents: 15,122.

Estimated Time per Response: 4 secs. to 6 mins.

Total Annual Burden: 91,231 hours.

Total Annual Costs: None.

Needs and Uses: 47 CFR 73.1212 requires a broadcast station to identify the sponsor of programming for which consideration is provided. For programming advertising commercial products or services, generally mention of the product's name or service constitutes sponsorship identification. For television political advertisements for candidates seeking public office, the sponsor shall be identified with letters equal to or greater than four percent of the vertical height of the television screen. In addition, when an entity rather than an individual sponsors broadcast programming of a political or controversial nature, the licensee must retain a list of the executive officers, board of directors, or executive committee, *etc.*, of the organization paying for the programming. Sponsorship announcements are waived when broadcasting ''want ads'' are sponsored by individuals, but the licensee must maintain a list of each advertiser's name, address, and telephone number. Each list must be available for public inspection.

OMB Control Number: 3060–0707.

Title: Over-the-Air Reception Devices (OTARD).

Form Number: N/A.

Type of Review: Revision of a currently approved collection.

Respondents: State, local, or tribal governments; Individuals or households.

Number of Respondents: 60.

Estimated Time per Response: 2 to 5 hours.

Frequency of Response: On occasion reporting requirements; Third party disclosure.

Total Annual Burden: 224 hours.

Total Annual Costs: $9,050.

Needs and Uses: The FCC uses petitions for waivers of the rules under section 207 of the Telecommunications Act of 1996 to determine whether a state, local, or non-governmental regulation or restriction is unique in a way that justifies waiver of our rules prohibiting restrictions on the use of over-the-air reception devices (OTARD).

OMB Control Number: 3060–0896.

Title: Broadcast Auction Form Exhibits.

Form Number: FCC 175.

Type of Review: Extension of a currently approved collection.

Respondents: Business and other for-profit entities; Not-for-profit institutions; and State, Local, or Tribal Governments.

Number of Respondents: 5,650.

Estimated Time per Response: 0.5 to 2 hours.

Total Annual Burden: 10,903 hours.

Total Annual Costs: $32,535,500.

Needs and Uses: FCC Rules require broadcast auction participants to submit exhibits disclosing ownership, bidding agreements, and engineering data. The Commission staff use these data to ensure that applicants are qualified to participate in FCC auctions and to ensure that license winners are entitled to receive the new entrant bidding credit, if applicable. Exhibits regarding joint bidding agreements are designed to prevent collusion. Submission of engineering exhibits for non-table services enables the FCC to determine which applications are mutually exclusive.

Federal Communications Commission.

Marlene Dortch,

Secretary.

[FR Doc. 02–19884 Filed 8–6–02; 8:45 am]

BILLING CODE 6712–01–P

FEDERAL COMMUNICATIONS COMMISSION

Notice of Public Information Collection(s) Being Reviewed by the Federal Communications Commission, Comments Requested

July 29, 2002.

SUMMARY: The Federal Communications Commission, as part of its continuing effort to reduce paperwork burden invites the general public and other Federal agencies to take this opportunity to comment on the following information collection(s), as required by the Paperwork Reduction Act of 1995, Public Law 104–13. An agency may not conduct or sponsor a collection of information unless it displays a currently valid control number. No person shall be subject to any penalty for failing to comply with a collection of information subject to the Paperwork Reduction Act (PRA) that does not display a valid control number. Comments are requested concerning whether the proposed collection of information is necessary for the proper performance of the functions of the Commission, including whether the information shall have practical utility; the accuracy of the Commission's burden estimate; ways to enhance the quality, utility, and clarity of the information collected; and ways to minimize the burden of the collection of information on the respondents, including the use of automated collection techniques or other forms of information technology.

DATES: Written comments should be submitted on or before October 7, 2002. If you anticipate that you will be submitting comments, but find it difficult to do so within the period of time allowed by this notice, you should advise the contact listed below as soon as possible.

ADDRESSES: Direct all comments to Judith Boley Herman or Leslie Smith, Federal Communications Commission, Room 1–C804 or Room 1–A804, 445 12th Street, SW., Washington, DC 20554 or via the Internet to *jboley@fcc.gov* or *lesmith@fcc.gov.*

FOR FURTHER INFORMATION CONTACT: For additional information or copies of the information collection(s), contact Judith Boley Herman at 202–418–0214 or via the Internet at *jboley@fcc.gov.*

SUPPLEMENTARY INFORMATION:

OMB Control No.: 3060–0715.

Title: Telecommunications Carriers' Use of Customer Proprietary Network Information and Other Customer Information, CC Docket No. 96–115.

Form No.: N/A.

Type of Review: Revision of a current collection.

Respondents: Business or other for-profit.

Number of Respondents: 4,832.

Estimated Time Per Response: 17 hours (average).

Frequency of Response: On occasion reporting requirement, recordkeeping requirement, third party disclosure requirement.

Total Annual Burden: 672,808 hours.

Total Annual Cost: $229,520,000.

Needs and Uses: The requirements implement the statutory obligations of section 222 of the Telecommunications Act of 1996. Among other things, carriers are permitted to use, disclose, or permit access to CPNI, without customer approval, under certain conditions. Many uses of CPNI require either opt-in or opt-out customer approval, depending upon the entity using the CPNI and the purpose for which it is used.

Federal Communications Commission.

Marlene H. Dortch,

Secretary.

[FR Doc. 02–19885 Filed 8–6–02; 8:45 am]

BILLING CODE 6712–01–P

FEDERAL COMMUNICATIONS COMMISSION

Public Information Collection Approved by Office of Management and Budget

July 31, 2002.

The Federal Communications Commission (FCC) has received Office of Management and Budget (OMB) approval for the following public information collections pursuant to the Paperwork Reduction Act of 1995, Public Law 104–13. An agency may not conduct or sponsor and a person is not required to respond to a collection of information unless it displays a currently valid control number. Questions concerning the OMB control numbers and expiration dates should be directed to Judy Boley Herman, Federal Communications Commission, (202) 418–0214.

Federal Communications Commission

OMB Control No.: 3060–0939.

Expiration Date: 5/31/04.

Title: E911 Second Memorandum and Order.

Form No.: None.

Respondents: Business or other for profit; Not-for-profit institutions; and State, local, or tribal government entities.

Estimated Annual Burden: 50 responses, approximately 1 hour per response and 50 total annual burden hours.

Estimated Annual Reporting and Recordkeeping Cost Burden: 0.

Frequency of Response: On occasion.

Description: Commercial Mobile Radio Service carriers and Public Safety Answering Points who cannot agree on the choice of transmission means and related technologies may ask the Commission for assistance in settling the disagreement. In approaching the Commission, the involved parties must provide the Commission with information, which will be used by the Commission to understand and resolve such disputes.

Federal Communications Commission.

Marlene H. Dortch,

Secretary.

[FR Doc. 02–19881 Filed 8–6–02; 8:45 am]

BILLING CODE 6712–01–P

FEDERAL COMMUNICATIONS COMMISSION

Sunshine Act Meeting; Open Commission Meeting, Thursday, August 8, 2002

August 1, 2002.

The Federal Communications Commission will hold an Open Meeting on the subjects listed below on Thursday, August 8, 2002, which is scheduled to commence at 9:30 a.m. in Room TW–C305, at 445 12th Street, SW., Washington, DC.

Item No.	Bureau	Subject
1	Media	*Title:* Digital Broadcast Copy Protection. *Summary:* The Commission will consider a Notice of Proposed Rulemaking concerning digital broadcast copy protection.
2	Office of Engineering and Technology and Media.	*Title:* Review of the Commission's Rules and Policies Affecting the Conversion to Digital Television (MM Docket No. 00–39). *Summary:* The Commission will consider a Second Report and Order and Second Memorandum Opinion and Order regarding its policies and rules for conversion of the broadcast television service to digital technology.
3	Wireless Telecommunications	*Title:* Year 2000 Biennial Regulatory Review—Amendment of Part 22 of the Commission's Rules to Modify or Eliminate Outdated Rules Affecting the Cellular Radiotelephone Service and other Commercial Mobile Radio Services (WT Docket No. 01–108). *Summary:* The Commission will consider a Report and Order concerning various Part 22 rules that have become outdated due to technological change, increased competition in the Commercial Mobile Radio Service (CMRS), or supervening rules.

Additional information concerning this meeting may be obtained from Maureen Peratino or David Fiske, Office of Media Relations, telephone number (202) 418–0500; TTY 1–888–835–5322.

Copies of materials adopted at this meeting can be purchased from the FCC's duplicating contractor, Qualex International (202) 863–2893; Fax (202) 863–2898; TTY (202) 863–2897. These copies are available in paper format and alternative media, including large print/type; digital disk; and audio tape. Qualex International may be reached by e-mail at *Qualexint@aol.com.*

This meeting can be viewed over George Mason University's Capitol Connection. The Capitol Connection also will carry the meeting live via the Internet. For information on these services call (703) 993–3100. Audio/Video coverage of the meeting will be broadcast live over the Internet from the FCC's Audio/Video Events web page at *http://www.fcc.gov/realaudio.* Audio and video tapes of this meeting can be purchased from CACI Productions, 341 Victory Drive, Herndon, VA 20170, telephone number (703) 834–1470, Ext. 19; fax number (703) 834–0111.

Federal Communications Commission.

Marlene H. Dortch,

Secretary.

[FR Doc. 02–20114 Filed 8–5–02; 2:06 pm]

BILLING CODE 6712–01–P

FEDERAL MARITIME COMMISSION

Notice of Agreement(s) Filed

The Commission hereby gives notice of the filing of the following agreement(s) under the Shipping Act of 1984. Interested parties can review or obtain copies of agreements at the Washington, DC offices of the Commission, 800 North Capitol Street, NW., Room 940. Interested parties may submit comments on an agreement to the Secretary, Federal Maritime Commission, Washington, DC 20573, within 10 days of the date this notice appears in the **Federal Register**.

Agreement Nos.: 011803–001.

Title: Maersk Sealand/Evergreen Slot Exchange Agreement.

Parties: A.P. Moller-Maersk Sealand, Evergreen Marine Corp. (Taiwan) Ltd.

Synopsis: The proposed agreement modification adds Yantian as an additional port to the geographic scope of the agreement.

Dated: August 2, 2002.

By Order of the Federal Maritime Commission.

Bryant L. VanBrakle,

Secretary.

[FR Doc. 02–20003 Filed 8–6–02; 8:45 am]

BILLING CODE 6730–01–P

FEDERAL MARITIME COMMISSION

Ocean Transportation Intermediary License Reissuance

Notice is hereby given that the following Ocean Transportation Intermediary license has been reissued by the Federal Maritime Commission pursuant to section 19 of the Shipping Act of 1984, as amended by the Ocean Shipping Reform Act of 1998 (46 U.S.C. app. 1718) and the regulations of the Commission pertaining to the licensing of Ocean Transportation Intermediaries, 46 CFR part 515.

License No.: 13778N.

Name/Address: Triton Shipping Co., Inc., 8081 NW 67th Street, Miami, FL 33166.

Date Reissued: May 25, 2002.

Sandra L. Kusumoto,

Director, Bureau of Consumer Complaints and Licensing.

[FR Doc. 02–20004 Filed 8–6–02; 8:45 am]

BILLING CODE 6730–01–P

FEDERAL RESERVE SYSTEM

Formations of, Acquisitions by, and Mergers of Bank Holding Companies

The companies listed in this notice have applied to the Board for approval, pursuant to the Bank Holding Company Act of 1956 (12 U.S.C. 1841 *et seq.*) (BHC Act), Regulation Y (12 CFR part 225), and all other applicable statutes and regulations to become a bank holding company and/or to acquire the assets or the ownership of, control of, or the power to vote shares of a bank or bank holding company and all of the banks and nonbanking companies owned by the bank holding company, including the companies listed below.

The applications listed below, as well as other related filings required by the Board, are available for immediate inspection at the Federal Reserve Bank indicated. The application also will be available for inspection at the offices of the Board of Governors. Interested persons may express their views in writing on the standards enumerated in the BHC Act (12 U.S.C. 1842(c)). If the proposal also involves the acquisition of a nonbanking company, the review also includes whether the acquisition of the nonbanking company complies with the standards in section 4 of the BHC Act (12 U.S.C. 1843). Unless otherwise noted, nonbanking activities will be conducted throughout the United States. Additional information on all bank holding companies may be obtained from the National Information Center Web site at *www.ffiec.gov/nic/*.

Unless otherwise noted, comments regarding each of these applications must be received at the Reserve Bank indicated or the offices of the Board of Governors not later than August 30, 2002.

A. Federal Reserve Bank of New York (Betsy Buttrill White, Senior Vice President) 33 Liberty Street, New York, New York 10045–0001:

1. HSBC Holdings PLC, London, England; HSBC Holdings B.V., London, England; HSBC Finance (Netherlands), London, England; and HSBC North America, Inc., Buffalo, New York; to acquire 100 percent of the voting shares of HSBC Washington Savings Bank, Seattle, Washington, and HSBC Oregon Shell Bank, Portland, Oregon, both banks in formation.

B. Federal Reserve Bank of Richmond (A. Linwood Gill, III, Vice President) 701 East Byrd Street, Richmond, Virginia 23261–4528:

1. Guaranty Financial Services, Inc., Huntington, West Virginia; to become a bank holding company by acquiring 100 percent of the voting shares of Guaranty Bank & Trust Company, Huntington, West Virginia.

C. Federal Reserve Bank of Atlanta (Sue Costello, Vice President) 1000 Peachtree Street, NE., Atlanta, Georgia 30309–4470:

1. Generation Bancshares, Inc., Blairsville, Georgia; to become a bank holding company by acquiring 100 percent of the voting shares of Generation Bank, Blairsville, Georgia (in organization).

D. Federal Reserve Bank of Chicago (Phillip Jackson, Applications Officer) 230 South LaSalle Street, Chicago, Illinois 60690–1414:

1. Bement Bancshares, Inc., Bement, Illinois; to acquire 100 percent of the voting shares of CGB&L Financial Group, Inc., Cerro Gordo, Illinois, and thereby indirectly acquire voting shares of Cerro Gordo Building and Loan, S.B., Cerro Gordo, Illinois.

2. Oswego Community Bank Employee Stock Ownership Plan, Oswego, Illinois; to acquire additional voting shares and increase its ownership from 32.52 percent to 51 percent of the voting shares of Oswego Bancshares, Oswego, Illinois, and thereby indirectly acquire additional voting shares of Oswego Community Bank, Oswego, Illinois.

E. Federal Reserve Bank of Dallas (W. Arthur Tribble, Vice President) 2200 North Pearl Street, Dallas, Texas 75201–2272:

1. Prosperity Bancshares, Inc., Houston, Texas; to merge with Southwest Bank Holding Company, Dallas, Texas, and thereby indirectly acquire Bank of the Southwest of Dallas, Dallas, Texas.

Board of Governors of the Federal Reserve System, August 2, 2002.

Jennifer J. Johnson,

Secretary of the Board.

[FR Doc. 02–20005 Filed 8–6–02; 8:45 am]

BILLING CODE 6210–01–S

FEDERAL RESERVE SYSTEM

Formations of, Acquisitions by, and Mergers of Bank Holding Companies; Correction

This notice corrects a notice (FR Doc. 02-17355) published on pages 45733-45734 of the issue for Wednesday, July 10, 2002.

Under the Federal Reserve Bank of San Francisco heading, the entry for UCBH Holdings, Inc., San Francisco, California, is revised to read as follows:

A. Federal Reserve Bank of San Francisco (Maria Villanueva, Consumer Regulation Group) 101 Market Street, San Francisco, California 94105–1579:

1. UCBH Holdings, Inc., San Francisco, California; to acquire up to 100 percent of the voting shares of Bank of Canton of California, San Francisco, California.

Comments on this application must be received by August 24, 2002.

Board of Governors of the Federal Reserve System, August 2, 2002.

Jennifer J. Johnson,

Secretary of the Board.

[FR Doc. 02–20006 Filed 8–6–02; 8:45 am]

BILLING CODE 6210–01–S

DEPARTMENT OF HEALTH AND HUMAN SERVICES

Proposed Recommendation Regarding Support of Research Protocol: Precursors to Diabetes in Japanese American Youth

AGENCY: Office of the Secretary, Office of Public Health and Science, Office for Human Research Protections,

Department of Health and Human Services.

ACTION: Notice.

SUMMARY: The Office for Human Research Protections (OHRP), Office of Public Health and Science, Department of Health and Human Services (HHS), gives notice that a panel of experts was convened pursuant to the requirements of 45 CFR 46.407 for review of a proposed protocol entitled ''Precursors to Diabetes in Japanese American Youth.'' This proposed research would include children as research subjects. OHRP has reviewed the protocol and findings of the expert panel and proposes to recommend approval for HHS support of this research protocol, subject to the stipulation of a modification of the protocol and consent forms in accordance with expert recommendations. Public comment is solicited regarding this proposed recommendation pursuant to the requirements of 45 CFR 46.407.

DATES: To be considered, comments must be received on or before 5 p.m. on August 21, 2002.

ADDRESSES: Please send comments to: Clifford C. Scharke, Division of Policy Planning and Special Projects, Office for Human Research Protections, 1101 Wootton Parkway, Suite 200, The Tower Building, Rockville, MD 20852. Comments also may be sent via facsimile at (301) 402–2071 (not a toll free number) or by e-mail to *cscharke@osophs.dhhs.gov.*

FOR FURTHER INFORMATION CONTACT: Clifford C. Scharke, Division of Policy Planning and Special Projects, Office for Human Research Protections, 1101 Wootton Parkway, Suite 200, The Tower Building, Rockville, MD 20852; telephone number: (301) 402–5218 (not a toll free number) or by e-mail to *cscharke@osophs.dhhs.gov.*

SUPPLEMENTARY INFORMATION: The HHS regulations regarding the protection of human research subjects, 45 part 46, permit HHS to conduct or fund research involving children only if the research falls within one of the following categories: research not involving greater than minimal risk (45 CFR 46.404); research involving greater than minimal risk but presenting the prospect of direct benefit to the individual subjects (45 CFR 46.405); research involving greater than minimal risk and presenting no prospect of direct benefit to individual subjects, but likely to yield generalizable knowledge about the subject's disorder or condition (45 CFR 46.405); and research not otherwise approvable which presents an opportunity to understand, prevent, or alleviate a serious problem affecting the health or welfare of children (45 CFR 46.407). In accordance with § 46.407, HHS will conduct or fund research involving children which an Institutional Review Board (IRB) has determined does not meet the requirements of 45 CFR 46.404–46.406 only if (a) the IRB finds that the research presents a reasonable opportunity to further the understanding, prevention, or alleviation of a serious problem affecting the health or welfare of children; and (b) the Secretary of HHS, after consultation with a panel of experts in pertinent disciplines and following opportunity for public review and comment, has determined either: (1) That the research in fact satisfies the conditions of Section 46.404, Section 46.405, or Section 46.406, as applicable, or (2) the following: (i) the research presents a reasonable opportunity to further the understanding, prevention, or alleviation of a serious problem affecting the health or welfare of children; (ii) the research will be conducted in accordance with sound ethical principles; (iii) adequate provisions are made for soliciting the assent of children and the permission of their parents or guardians, as set forth in § 46.408.

OHRP received a request from the University of Washington of Seattle, Washington to convene a panel of experts pursuant to 45 CFR 46.407 to review a protocol entitled ''Precursors to Diabetes in Japanese American Youth'' (1 R01 DK59234–01). The long-term aim of the proposed study is to increase understanding about the metabolic changes that precede the development of type 2 diabetes in children and the influence of Asian ethnicity on the diabetes risk. The institution's designated IRB determined that the research does not meet the requirements of 45 CFR 46.404, 46.405, or 46.406, but is suitable for review under 45 CFR 46.407. Although the IRB found that the research was not designed to provide direct benefit to subjects, it found that the research presents a reasonable opportunity to further the understanding, prevention, or alleviation of a serious problem affecting the health or welfare of children.

The panel of experts convened by OHRP, under authority delegated by the Secretary of HHS, found that the protocol presented a reasonable opportunity to further the understanding of a serious problem affecting the health or welfare of children and recommended modifications to the protocol to further minimize the risks to the children and to the consent forms. The experts found that if these recommended modifications are implemented, the research would be conducted in accordance with sound ethical principles, with adequate provisions for assent and permission, and would be in conformance with the requirements of 45 CFR 46.407 and 46.408. The summary report of the findings of the expert panel members is available from OHRP, upon request.

OHRP proposes to recommend approval of HHS support of this research protocol, subject to the stipulation that the protocol and consent forms be modified in accordance with the expert recommendations, to the satisfaction of the IRB and the funding authority, prior to the involvement of human subjects. Public review and comment on this proposal is hereby solicited pursuant to the requirements of 45 CFR 46.407.

Dated: June 27, 2002.

Eve E. Slater, F.A.C.C.,

Assistant Secretary for Health.

[FR Doc. 02–19871 Filed 8–6–02; 8:45 am]

BILLING CODE 4150–28–M

DEPARTMENT OF HEALTH AND HUMAN SERVICES

Food and Drug Administration

[Docket No. 02D–0307]

Draft Guidance for Industry on Potassium Chloride Modified-Release Tablets and Capsules: In Vivo Bioequivalence and In Vitro Dissolution Testing, Revision; Availability

AGENCY: Food and Drug Administration, HHS.

ACTION: Notice.

SUMMARY: The Food and Drug Administration is announcing the availability of a revised draft guidance for industry entitled ''Potassium Chloride Modified-Release Tablets and Capsules: In Vivo Bioequivalence and In Vitro Dissolution Testing.'' This draft guidance document provides recommendations to sponsors of abbreviated new drug applications (ANDAs) on the design of bioequivalence studies for modified-release dosage forms of potassium chloride.

DATES: Submit written or electronic comments on the draft guidance by September 23, 2002. General comments on agency guidance documents are welcome at any time.

ADDRESSES: Submit written requests for single copies of this draft guidance to the Division of Drug Information (HFD–240), Center for Drug Evaluation and Research, Food and Drug Administration, 5600 Fishers Lane, Rockville, MD 20857. Send one self-addressed adhesive label to assist that office in processing your requests. Submit written comments on the draft guidance to the Dockets Management Branch (HFA–305), Food and Drug Administration, 5630 Fishers Lane, rm. 1061, Rockville, MD 20857. Submit electronic comments to http://www.fda.gov/dockets/ecomments. See the **SUPPLEMENTARY INFORMATION** section for electronic access to the draft guidance document.

FOR FURTHER INFORMATION CONTACT: Lizzie Sanchez, Center for Drug Evaluation and Research (HFD–650), Food and Drug Administration, 5600 Fishers Lane, Rockville, MD 20857, 301–827–5847.

SUPPLEMENTARY INFORMATION:

I. Background

FDA is announcing the availability of a revised draft guidance for industry entitled ''Potassium Chloride Modified-Release Tablets and Capsules: In Vivo Bioequivalence and In Vitro Dissolution Testing.'' This draft guidance is intended to provide information to sponsors of ANDAs on the design of bioequivalence studies for modified-release dosage forms of potassium chloride. A document entitled ''Guidance for In Vivo Bioequivalence Study for Slow-Release Potassium Chloride Tablets/Capsules'' was issued on May 15, 1987, and revised on June 6, 1994. The guidance is now being revised to incorporate current thinking on the bioequivalence requirements for potassium chloride modified-release products.

In the previous guidance, the agency recommended a three-way crossover study design comparing the reference product (RLD) to the generic product and to a solution of potassium chloride. The earlier guidance also recommended analysis of covariance (ANCOVA) for the pharmacokinetic parameters. The revised draft guidance provides recommendations for a two-way crossover study design comparing the generic product to the RLD. In addition, in the revision, the use of ANCOVA is no longer recommended. The agency has found that the analysis of variance (ANOVA) with baseline correction is adequate for bioequivalence analysis of pharmacokinetic data obtained following oral administration of potassium chloride drug products. The recommendations for in vitro dissolution testing and the criteria for waivers of in vivo testing for lower strengths have been revised in accordance with the guidance entitled ''Bioavailability and Bioequivalence Studies for Orally Administered Drug Products—General Considerations,'' issued in October 2000.

The agency is issuing this product-specific draft guidance because of special considerations for potassium chloride testing that are not covered in other agency guidances.

This revised draft guidance is being issued consistent with FDA's good guidance practices (21 CFR 10.115). The draft guidance, when finalized, will represent the agency's current thinking on studies to demonstrate the bioequivalence of potassium chloride modified-release tablets and capsules. It does not create or confer any rights for or on any person and does not operate to bind FDA or the public. An alternative approach may be used if such approach satisfies the applicable statutes and regulations.

II. Comments

Interested persons may submit to the Dockets Management Branch (see **ADDRESSES**) written or electronic comments on the draft guidance. Two copies of any comments are to be submitted, except that individuals may submit one copy. Comments are to be identified with the docket number found in brackets in the heading of this document. The draft guidance and received comments are available for public examination in the Dockets Management Branch between 9 a.m. and 4 p.m., Monday through Friday.

III. Electronic Access

Persons with access to the Internet may obtain the document at either http://www.fda.gov/cder/guidance/index.htm or http://www.fda.gov/ohrms/dockets/default.htm.

Dated: July 31, 2002.

Margaret M. Dotzel,

Associate Commissioner for Policy.

[FR Doc. 02–19863 Filed 8–6–02; 8:45 am]

BILLING CODE 4160–01–S

DEPARTMENT OF HEALTH AND HUMAN SERVICES

Health Resources and Services Administration

Peer Educator Training Sites and Resource and Evaluation Center Cooperative Agreements; Open Competition Announcement

AGENCY: Health Resources and Services Administration, HHS.

ACTION: Notice of availability of funds.

SUMMARY: The Health Resources and Services Administration's (HRSA) HIV/AIDS Bureau (HAB) announces that applications will be accepted for fiscal year (FY) 2002 awards for up to four Peer Educator Training Sites (PETS) and one Resource and Evaluation Center (REC) Demonstration Cooperative Agreements. HRSA will support up to four national, regional, or local organizations with a demonstrable record of providing PETS, or similar programs, and other technical assistance (TA) designed to strengthen HIV/AIDS peer education programs within Ryan White Comprehensive AIDS Resources Emergency (CARE) Act funded sites. Through the training of peer educators, the PETS program will expand and improve the delivery of HIV/AIDS primary health care services in underserved communities of color significantly affected by existing and emerging HIV/AIDS epidemics. Peer educators assist people who are infected or affected by HIV to access and remain in care, through outreach, education, and advocacy services to affected individuals and health care professionals. These peer educators are typically not clinically trained health care professionals and may include peer counselors; community health center workers; promoters; outreach workers; treatment educators; HIV peer educators, consumer trainers, and peer advocates. Also, PETS will provide TA to the community-based organizations (CBOs) that employ the peer educators trained by the PETS. The purpose of the TA is two fold. First, the PETS will work with CBO peer educator programs to identify training needs and potential for capacity building to enhance peer educator programs. Second, the PETS will provide TA to CBOs to maximize the impact of peer educator activities within care service programs.

One cooperative agreement will support a REC to provide TA to PETS to develop effective programs for monitoring and evaluating peer educator training activities. The REC will also coordinate the collection,

evaluation, and dissemination of training and professional tools to support the development, adaptation, and translation of new or existing tools and materials and to reduce duplication among PETS grantees.

Available Funding: It is anticipated that awards for up to four PETS and one REC Demonstration Cooperative Agreements will be made in FY 2002 for a total of $2,000,000 of available funds. HRSA expects that the average PETS award will be approximately $300,000 to $400,000 and the average REC award will be approximately $400,000. It is anticipated that project funding will be for 3 years. After the first year, continuation funding will depend on reasonable progress and the availability of funds. There are no matching requirements for this program.

Eligible Applicants: Funding will be directed to activities designed to deliver services specifically targeting racial and ethnic minority populations affected by HIV/AIDS. Eligible entities may include: not-for-profit community-based organizations, national organizations, colleges and universities, clinics and hospitals, research institutions, State and local government agencies and tribal government and tribal/urban Indian entities and organizations. Faith-based and community-based organizations are eligible to apply.

Authorizing Legislation: The authority for these cooperative agreements is in Section 2692(a) of the Public Health Service Act, as amended, 42 U.S.C. 300ff–111(a). This program is excluded from coverage under Executive Order 12372.

Where to Request and Send Applications: To obtain an application kit: Call the HRSA Grants Application Center at the toll free number, 877–477–2123 and request the OMB Catalogue of Federal Domestic Assistance number (CFDA) 93.145, and cite ''Peer Educator Training Sites and Resource and Evaluation Center Cooperative Agreements''.

To submit the completed kit: Send the original and 2 copies of your grant application to: HRSA Grants Application Center, Attention: HAB Grants Management Officer, 901 Russell Avenue, Suite 450, Gaithersburg, MD 20879. Applications sent to any other address are subject to being returned. **Federal Register** notices are available on the following web site: *http://www.hab.hrsa.gov.*

Application Dates: A letter of intent to submit an application is requested by August 21, 2002. Applications for this announced grant must be received in the HRSA Grant Application Center by close of business September 6, 2002. Applications shall be considered as meeting the deadline if they are (1) received on or before the deadline date or (2) are postmarked on or before the deadline date and received in time for orderly processing and submission to the review committee. Applicants should request a legibly dated receipt from a commercial carrier or U.S. Postal Service postmark. Private metered postmarks will not be accepted as proof of timely mailing. Applications postmarked after the due date will be returned to the applicant.

ADDRESSES: Brief letters of intent are requested for HAB to determine how many will apply. Letters of intent to apply for funding should be faxed, 301–594–2835 or mailed to Elijah Martin, Jr., HIV/AIDS Bureau, Health Resources and Services Administration, 5600 Fishers Lane, Room 7–47, Rockville, MD 20857.

FOR FURTHER INFORMATION CONTACT: Additional technical information may be obtained from Elijah Martin, Jr., HAB, HRSA, 5600 Fishers Lane 7–47 Rockville, MD 20857. His telephone number is (301) 443–0802; fax number (301) 594–2835; and e-mail emartin@hrsa.gov. You may also contact Ledia I. Martinez, M.D., Acting Chief, HIV Education Branch, Division of Training and Technical Assistance, HAB, HRSA, 5600 Fishers Lane, Room 7–46, Rockville, MD 20857. Her telephone number is (301) 443–5431 and e-mail *lmartinez@hrsa.gov.*

SUPPLEMENTARY INFORMATION: Applications will be reviewed by an objective review committee. The review criteria will include: adequacy of needs assessment; adequacy of proposed plan; coordination and collaboration; management plan, staffing, project organization and resources; program documentation, program evaluation, and quality improvement; appropriateness and justification of budget; and adherence to program guidance.

The Secretary shall give preference to qualified projects which will—

(A) Train, or result in the training of, health professionals who will provide treatment for minority individuals with HIV disease and other individuals who are high risk of contracting such disease; and

(B) Train, or result in the training of, minority health professionals and minority allied health professionals to provide treatment for individuals with such disease.

As an active partner in this cooperative agreement, HRSA will have significant programmatic involvement with the applicant regarding program plans, policies and other issues which may have major implications for any activities undertaken by the applicant under the cooperative agreement. HRSA will provide consultation and technical assistance in planning, operating, and evaluating major program activities. HRSA's specific involvement will be to:

- Assist to facilitate collaborations with Ryan White grantees and other HIV community organizations to reach the target population;
- Participate, as appropriate, in planning and producing any conferences, meetings, or site visits conducted during the period of the project; and
- Attend and participate in advisory, consultant meeting, and other project planning meetings and conference calls.

Paper Reduction Act: Should any of the data collection activities associated with this cooperative agreement fall under the purview of the Paperwork Reduction Act of 1995, OMB clearance will be sought.

Dated: July 22, 2002.

Elizabeth M. Duke,

Administrator.

[FR Doc. 02–19908 Filed 8–6–02; 8:45 am]

BILLING CODE 4165–15–P

DEPARTMENT OF HEALTH AND HUMAN SERVICES

Health Resources and Services Administration

Training and Technical Assistance Program Announcement; American Indian/Alaska Native Technical Assistance Center

AGENCY: Health Resources and Services Administration, HHS.

ACTION: Notice of availability of funds.

SUMMARY: The Health Resources and Services Administration (HRSA), HIV/AIDS Bureau (HAB) announces that applications will be accepted for fiscal year (FY) 2002 for the award of a cooperative agreement to support an American Indian/Alaska Native Technical Assistance Center (AIANTAC). The purpose of this cooperative agreement is to provide funding for the operation of a technical assistance center to provide competitive proposal development and implementation services to American Indian/Alaska Natives (AI/AN) in Urban and Tribal programs and in the AI/AN communities to increase their involvement in the competitive proposal process. This center will provide professional staff who will assist participants in the development,

preparation and finalization of written competitive proposals for submission. This one-on-one technical assistance will assist in the linkages among the AI/AN Urban and Tribal health care programs, which will increase their knowledge about HIV/AIDS prevention and treatment, increase their access to care and assist in eliminating health disparities in the AI/AN communities.

Available Funding: It is estimated that up to $700,000 will be available to support a single recipient. Actual funding levels will depend on the availability of funds. The entire project period will be 2 years. Continuation of awards will be made on the basis of satisfactory progress and the availability of funds.

Eligible Applicants: Eligible applicants are public and nonprofit private entities and schools and academic health sciences centers. Tribal/Native Alaskan organizations and faith-based and community-based organizations are eligible to apply. The applicant must demonstrate significant experience working with the AI/AN communities.

Authorizing Legislation: The authority of this cooperative agreement is Section 2692 of the Public Health Service Act.

Where To Request and Send an Application

To obtain an application kit: Call the HRSA Grants Application Center at 877–477–2123 and request the OMB Catalogue of Federal Domestic Assistance number is 93.145.

To submit the completed kit: Send the original and 2 copies of your grant application to: HRSA Grants Application Center, Attention: Grants Management Officer, 901 Russell Avenue, Suite 450, Gaithersburg, MD 20879.

Application Dates: The deadline for receipt of applications is close of business September 6, 2002. Applications shall be considered as meeting the deadline if they are either (1) received on or before the due date or (2) postmarked on or before the deadline date.

Applicants must request a legibly dated U.S. Postal Service postmark or obtain a legibly dated receipt from a commercial carrier or the U.S. Postal Service. Private metered postmarks will not be accepted as proof of timely mailing. Grant applications postmarked after the deadline date and/or not received in time for the Objective Review Committee will be returned to the applicant.

FOR ADDITIONAL INFORMATION: Additional information may be obtained from Juanita Koziol, MS, NP, CS, RN., Senior Public Health Analyst, HAB, 5600 Fishers Lane, Parklawn Building, Room 7–47, Rockville, MD 20857, Telephone (301) 443–6068, FAX: (301) 443–6709, e-mail: *jkoziol@hrsa.gov*

SUPPLEMENTARY INFORMATION: The Secretary shall give preference to qualified projects which will—

(A) Train, or result in the training of, health professionals who will provide treatment for minority individuals with HIV disease and other individuals who are at high risk of contracting such disease; and

(B) Train, or result in the training of, minority health professional and minority allied health professionals to provide treatment for individuals with such disease.

As an active partner in this cooperative agreement, HRSA will have significant involvement with the applicant regarding training plans, program plans and other issues which may have major implications for any activities undertaken by the applicant under the cooperative agreement. HRSA will provide consultation and technical assistance in planning, operating, and evaluating activities for the AIANTAC.

Dated: July 12, 2002.

Elizabeth M. Duke,

Administrator.

[FR Doc. 02–19907 Filed 8–6–02; 8:45 am]

BILLING CODE 4165–15–P

DEPARTMENT OF HEALTH AND HUMAN SERVICES

Health Resources and Services Administration

Advisory Commission on Childhood Vaccines; Notice of Meeting

In accordance with section 10(a)(2) of the Federal Advisory Committee Act (Public Law 92–463), announcement is made of the following National Advisory body scheduled to meet during the month of September.

Name: Advisory Commission on Childhood Vaccines (ACCV).

Date and Time: September 4, 2002; 9:00 a.m.–12:30 p.m.

Place: Audio Conference Call.

The full ACCV will meet via audio conference call on Wednesday, September 4, from 9:00 a.m. to 12:30 p.m. The public can join the meeting by dialing 1–888–968–3511 on September 4 and provide the following information:

Leader's Name: Thomas E. Balbier, Jr.

Password: ACCV.

The agenda items for September 4 will include, but not limited to: an update on the thimerosal class action lawsuits; an update on the CDC influenza vaccine recommendation; a presentation on the average cost of a health insurance policy; and updates from the Division of Vaccine Injury Compensation, the Department of Justice, and the National Vaccine Program Office.

Persons interested in providing an oral presentation should submit a written request, along with a copy of their presentation to: Ms. Cheryl Lee, Principal Staff Liaison, Division of Vaccine Injury Compensation, Office of Special Programs, Health Resources and Services Administration, Room 8A–46, 5600 Fishers Lane, Rockville, MD 20857 or by e-mail at *clee@hrsa.gov.* Requests should contain the name, address, telephone number, and any business or professional affiliation of the person desiring to make an oral presentation. Groups having similar interests are requested to combine their comments and present them through a single representative. The allocation of time may be adjusted to accommodate the level of expressed interest. The Division of Vaccine Injury Compensation will notify each presenter by mail or telephone of their assigned presentation time.

Persons who do not file an advance request for a presentation, but desire to make an oral statement, may announce it at the time of the comment period on the audio conference call. These persons will be allocated time as time permits.

Anyone requiring information regarding the ACCV should contact Ms. Cheryl Lee, Principal Staff Liaison, Division of Vaccine Injury Compensation, Office of Special Programs, Health Resources and Services Administration, Room 8A–46, 5600 Fishers Lane, Rockville, Maryland 20857, telephone (301) 443–2124 or e-mail: *clee@hrsa.gov.*

Agenda items are subject to change as priorities dictate.

Dated: July 31, 2002.

Jane M. Harrison,

Director, Division of Policy Review and Coordination.

[FR Doc. 02–19870 Filed 8–6–02; 8:45 am]

BILLING CODE 4165–15–P

DEPARTMENT OF HEALTH AND HUMAN SERVICES

National Institutes of Health

Submission for OMB Review; Comment Request; HIV Vaccine Awareness Study-Americans' Attitudes

SUMMARY: Under the provisions of Section 3507(a)(1)(D) of the Paperwork Reduction Act of 1995, the National Institutes of Allergy and Infectious Diseases (NIAID), the National Institutes of Health (NIH) has submitted to the Office of Management and Budget (OMB) a request for review and approval of the information collection listed below. This proposed information collection was previously published in the **Federal Register** on November 28, 2001, pages 59438–59439 and allowed 60-days for public comment. No comments were received. The purpose

of this notice is to allow an additional 30 days for public comment. The National Institutes of Health may not conduct or sponsor, and the respondent is not required to, an information collection that has been extended, revised, or implemented on or after October 1, 1995, unless it displays a currently valid OMB control number.

Proposed Collection: Title: HIV Vaccine Awareness Study-Americans' Attitudes. *Type of Information Collection Request:* New. *Need and Use of Information Collection:* NIH/NIAID/DAIDS is in the process of planning a campaign to inform Americans about HIV preventive vaccine research. As part of planning, it is necessary to establish a baseline of Americans' levels of knowledge and attitudes with respect to HIV preventive vaccine research; to determine what information is required by communities to address the mistrust, myths, and misinformation about HIV vaccine research; and to identify how and what information should be provided to communities to promote more positive attitudes toward HIV vaccine research. Findings will help inform initial campaign decisions and serve to evaluate the effectiveness of the campaign's efforts. *Frequency of Response:* Two times. *Affected Public:* Individuals or households. *Type of Respondents:* Random samples of adults, including those considered at-risk for HIV and members of their social networks. The annual reporting burden is as follows:

Type of respondents	Estimated number of respondents	Estimated number of responses per respondent	Average burden hours per response	Estimated total annual burden hours requested
General Population Adults	4,000	1	.25	1,000
HIV-Affected Adults	3,000	1	.25	750
Total	7,000		.25	1,750

The annualized cost to respondents is estimated at $17,500. There are no Capital Costs to report. There are no Operating or Maintenance Costs to report.

Request for Comments: Written comments and/or suggestions from the public and affected agencies are invited on one or more of the following points: (1) Whether the proposed collection of information is necessary for the proper performance of the function of the agency, including whether the information will have practical utility; (2) The accuracy of the agency's estimate of the burden of the proposed collection of information, including the validity of the methodology and assumptions used; (3) Ways to enhance the quality, utility, and clarity of the information to be collected; and (4) Ways to minimize the burden of the collection of information on those who are to respond, including the use of appropriate automated, electronic, mechanical, or other technological collection techniques or other forms of information technology.

Direct Comments to OMB: Written comments and/or suggestions regarding the item(s) contained in this notice, especially regarding the estimated public burden and associated response time, should be directed to the: Office of Management and Budget, Office of Regulatory Affairs, New Executive Office Building, Room 10235, Washington, DC 20503, Attention: Desk Officer for NIH. To request more information on the proposed project or to obtain a copy of the data collection plans and instruments, contact Robert J. Gulakowski, Health Sciences Communications Specialist, DAIDS, NIAID, NIH, 6700–B Rockledge Drive, MSC 7620, Room 4144, Bethesda, MD 20892–7620, or call non-toll free (301) 496–0545, or E-mail your request, including your address to *rg106x@nih.gov.*

Comments Due Date: Comments regarding this information collection are best assured of having their full effect if received within 30-days of the date of this publication.

Dated: July 31, 2002.

Brenda J. Velez,

Chief, CMB, NIAID and NIAID Project Clearance Liaison.

[FR Doc. 02–19868 Filed 8–6–02; 8:45 am]

BILLING CODE 4140–01–M

DEPARTMENT OF HEALTH AND HUMAN SERVICES

National Institutes of Health

Government-Owned Inventions; Availability for Licensing

AGENCY: National Institutes of Health, Public Health Service, DHHS.

ACTION: Notice.

SUMMARY: The inventions listed below are owned by agencies of the U.S. Government and are available for licensing in the U.S. in accordance with 35 U.S.C. 207 to achieve expeditious commercialization of results of federally-funded research and development. Foreign patent applications are filed on selected inventions to extend market coverage for companies and may also be available for licensing.

ADDRESSES: Licensing information and copies of the U.S. patent applications listed below may be obtained by writing to the indicated licensing contact at the Office of Technology Transfer, National Institutes of Health, 6011 Executive Boulevard, Suite 325, Rockville, Maryland 20852–3804; telephone: 301/496–7057; fax: 301/402–0220. A signed Confidential Disclosure Agreement will be required to receive copies of the patent applications.

An Obligate Domain-Swapped Dimer of Cyanovirin with Enhanced Anti-Viral Activity

Carole A. Bewley and Brendans Kelly (NIDDK).

DHHS Reference No. E–096–02/0 filed 25 Feb 2002.

Licensing Contact: Sally Hu; 301/496–7056 ext. 265; e-mail: *hus@od.nih.gov*.

The present invention provides a purified or isolated obligate domain-swapped dimer of Cyanovirin-N (CVN hereafter), a method of making an obligate domain-swapped dimer of CVN and a method of inhibiting a viral infection of a mammal by administering domain-swapped dimer of CVN. CVN is outstanding in that it potently blocks viral entry in all human and simian isolates by binding to HIV through highly avid and very specific carbohydrate-mediated interactions with the surface envelope glycoprotein gp120. CVN has also been shown to form a domain-swapped dimer under non-physiological conditions such as mM concentration and low pH. This invention provides an obligate domain-swapped dimeric mutant of CVN, called ΔQ50–CVN, which has several significant advantages over the wild-type CVN: First, ΔQ50–CVN can be purified form a crude bacterial cell

lysate in a single chromatographic step because it forms only one homogeneous species. Second, because this obligate dimer has four carbohydrate binding sites, it binds gp120 and other glycoproteins with greater affinity than wild-type CVN. Third, ΔQ50–CVN shows an enhancing increase in efficacy in blocking viral entry in a quantitative HIV–1 envelope-mediated cell fusion assay. Thus, ΔQ50–CVN displays enhanced anti-HIV activity relative to the wild-type CVN monomer and offers a great advantage over wild-type CVN because it is extremely easy to purify large quantities to greater than 95% homogeneity. So, it may open the possibility that an effective drug treatment for HIV could reach underdeveloped countries.

Finally, the background of this invention is further described in J. Am. Chem. Soc. (2002) 124:3210–3211, J. Magn. Reson. (2002) 154:329–335, Structure (2001) 10:931–940, J. Am. Chem. Soc. (2001) 123:3892–3902, J. Am. Chem. Soc. 122: 6009–6016, and J. Mol. Biol. (1999) 288:403–412.

Methods and Compositions for Antagonizing Septic Shock

George Kunos (NIAAA).
DHHS Reference No. E–321–01/0 filed 15 Aug 2001.
Licensing Contact: Norbert Pontzer; 301/496–7736, ext. 284; e-mail: *np59n@nih.gov*.

Septic shock is an often fatal type of vasodilatory shock that may accompany microbial infections. Septic shock has therefore been an increasing problem in recent years because of the increasing number of individuals who are immunocompromised. Recent studies have indicated that the hypotension associated with hemorrhagic shock (Wagner *et al.,* Nature 1997; 390:518–521) or septic shock (Varga *et al.,* FASEB J. 1998; 12:1035–1044) may be mediated by macrophage-derived endogenous cannabinoids such as anandamide, acting at vascular cannabinoid receptors. In an earlier study (PNAS, 1999; 96:14136) the NIH inventor(s) presented several lines of evidence indicating the vasodilator effect of anandamide is mediated by a receptor distinct from the two known cannabinoid receptors, CB1 and CB2. In particular, anandamide-induced vasodilation persists in mice deficient in both CB1 and CB2 receptors. They postulated that a yet unidentified cannabinoid receptor was responsible for the observed effect. The invention described and claimed in the pending patent application provides compounds acting as agonists and antagonists at the newly described cannabinoid receptor and methods for reversing pathological vasodilation of blood vessels observed during conditions such as septic shock.

Methods of Diagnosing and Treating Schizophrenia

Daniel R. Weinberger *et al.* (NIMH).
DHHS Reference No. E–247–01/0 filed 31 Aug 2001.
Licensing Contact: Norbert Pontzer; 301/496–7736, ext. 284; e-mail: *np59n@nih.gov*.

Neurotrophins promote survival of neurons from both the central nervous system and peripheral nervous system in cell culture. More recently it has been shown that neurotrophins may serve as a new class of neuromodulators that mediate activity-dependent modifications of neuronal connectivity and synaptic efficacy. Brain derived neurotrophic factor (BDNF) is a neurotrophin that mediates LTP and hippocampus-related spatial memory. Schizophrenia and other mental disorders appear to involve deficits in verbal memory and reduced hippocampal—acetyl aspartate (NAA), a measure of hippocampal neuronal integrity. BDNF may thus play a role in memory function and human diseases of the hippocampus such as schizophrenia.

The human BDNF gene contains one known non-conservative SNP, producing a met66val substitution. The invention is related to the discovery that a met66val polymorphism in the gene for BDNF is correlated with verbal memory and risk for schizophrenia. The invention provides methods and kits for diagnosing and modulating verbal memory and risk for schizophrenia in an individual by determining the individual's BDNF genotype, and associating a met allele with impaired verbal memory and risk for schizophrenia and a val allele with enhanced verbal memory and protection from schizophrenia. The invention also provides methods of finding and using compounds which modulate BDNF function in order to treat human diseases of the hippocampus such as memory disorders and schizophrenia.

Retinoids Can Increase the Potency of Anti-Cancer Immunotoxins

You N. Wu and Richard J. Youle (NINDS).
U.S. Patent 5,942,230 issued August 24, 1999 and U.S. Patent 6,197,528 issued March 6, 2001.
Licensing Contact: Richard Rodriguez; (301) 496–7056 ext 287; e-mail: *rodrigur@od.nih.gov*.

A unique method of potentiating the effect of anti-cancer immunotoxins has been developed, thus offering to significantly improve the treatment of a number of cancers as well as autoimmune diseases. Prolonged treatment of human cancers with classical methods such as radiation and chemotherapy, or a combination of both, may cause greater damage than the underlying disease because healthy tissue is often damaged along with diseased tissue. More recently, immunotherapy has emerged as a new and promising therapy for treating cancer because it employs monoclonal antibodies specific for tumor cells coupled to protein toxins. Thus, cancer cells are selectively targeted for destruction. These immunotoxins are being examined in numerous clinical trials for the treatment of cancer and autoimmune diseases. However, often the protein toxin coupled to the monoclonal antibody does not pass as readily into the cytosol of the target cell as does the native protein toxin. This invention improves the effectiveness of such immunotoxins by employing retinoic acid, which disrupts the Golgi apparatus of the target cell and increases the cytosolic routing of specific protein toxins. Also included in this invention is an in vitro method for assessing the ability of a retinoid to potentiate the activity of immunotoxins.

Dated: July 29, 2002.

Jack Spiegel,
Director, Division of Technology Development and Transfer, Office of Technology Transfer, National Institutes of Health.

[FR Doc. 02–19866 Filed 8–6–02; 8:45 am]
BILLING CODE 4140–01–P

DEPARTMENT OF HEALTH AND HUMAN SERVICES

National Institutes of Health

Laboratory Animal Welfare: Change in PHS Policy on Humane Care and Use of Laboratory Animals

AGENCY: National Institutes of Health, DHHS.

ACTION: Amended Policy Statement.

SUMMARY: The NIH is changing the PHS Policy on Humane Care and Use of Laboratory Animals (PHS Policy) to permit institutions with PHS Animal Welfare Assurances to submit verification of Institutional Animal Care and Use Committee (IACUC) approval for competing applications subsequent to peer review but prior to award.

DATES: This change in PHS Policy is effective as of September 1, 2002 (*i.e.*, for all applications submitted for the May-June 2003 Advisory Council dates).

FOR FURTHER INFORMATION CONTACT: Anthony Demsey, Ph.D., Senior Advisor for Policy, Office of Extramural Research, National Institutes of Health, 301–496–5127, email: *demseya@od.nih.gov*.

SUPPLEMENTARY INFORMATION: In the March 28, 2002, **Federal Register** (67 FR 14956), the NIH proposed to change the PHS Policy to allow institutions to provide IACUC approval for competing applications subsequent to peer review but prior to award. This change would modify the PHS Policy, applicable to all PHS-conducted or -supported activities involving live, vertebrate animals, which currently provides institutions with a PHS-approved Animal Welfare Assurance the option of submitting verification of IACUC approval for competing applications (1) at the time of submission, or (2) subsequent to submission but within 60 days from the receipt date and in any case prior to peer review. Now, with this change in the PHS Policy, IACUC verification is no longer required to be submitted prior to NIH peer review, but instead is simply required prior to award. This process, already adopted as of May 1, 2000, for Institutional Review Board approval of applications involving human subjects, is often referred to as ''just-in-time.'' The purpose of the change is to enhance the flexibility of institutions and reduce the burden on applicants and IACUCs, allowing resources to be focused on substantive review of applications likely to be funded. The change, however, permits funding components to require verification of IACUC approval at an earlier date if necessary.

Over 200 comments from the research community and institutional officials were received in response to the March 28, 2002, **Federal Register** solicitation for public comment on the proposed change. The comments were overwhelmingly in favor of the change; some included suggestions for NIH in its implementation of the change. Consequently, NIH emphasizes the following principles and expectations:

- The fundamental PHS Policy requirement that no award may be made without an approved Assurance and without verification of IACUC approval remains in effect. This change only affects the timing of the submission of the verification of that review.
- This change is intended to permit flexibility and discretion on the part of the institution. It is not a requirement that IACUC approval be deferred. Institutional officials retain the discretion to require IACUC approval prior to peer review in certain circumstances of their choosing if they so desire.
- Under no circumstances may an IACUC be pressured to approve a protocol or be overruled on its decision to withhold approval. NIH peer review groups will continue to address the adequacy of animal usage and protections in their review of an application and will continue to raise concerns about animal welfare issues. However, in no way is peer review intended to supersede or serve as a replacement for IACUC approval. An institution that elects to use IACUC just-in-time bears the responsibility for supporting the role of the IACUC.
- It remains incumbent upon investigators to be totally forthcoming and timely in conveying to their IACUCs any modifications related to project scope and animal usage that may result from the NIH review and award process. Should an institution find that one of its investigators disregards his/her responsibilities, the institution may, for example, determine that all animal protocols from that investigator be subject to IACUC approval before it will permit submission of an application from that investigator.
- The existing PHS Policy requirement that modifications required by the IACUC be submitted to the NIH with the verification of IACUC approval remains in effect, and it remains the responsibility of institutions to communicate any IACUC-imposed changes to NIH staff.
- The NIH understands its responsibility to ensure that institutions are given adequate notice to allow for timely IACUC review prior to award and will take appropriate internal measures to fulfill its responsibility to establish timely feedback.

For the reasons stated above, the NIH amends the PHS Policy on Humane Care and Use of Laboratory Animals as set forth below:

Amend the second sentence of Section IV.D.2. of the PHS Policy to delete the words ''a time not to exceed 60 days after the receipt deadline date'' and replace them with the words ''any time prior to award unless specifically required earlier by the funding component'' so that the sentence states: ''For competing applications or proposals only, such verification may be filed at any time prior to award unless specifically required earlier by the funding component.''

The NIH will modify the NIH Grants Policy Statement and instructions for the 398 Grant Application Form accordingly.

Dated: July 29, 2002.

Elias A. Zerhouni,

Director, National Institutes or Health.

[FR Doc. 02–19867 Filed 8–6–02; 8:45 am]

BILLING CODE 4140–01–P

DEPARTMENT OF THE INTERIOR

U.S. Geological Survey

Request for Public Comments on Information Collection Submitted to the Office of Management and Budget for Review Under the Paperwork Reduction Act

A request extending the collection of information has been submitted to the Office of Management and Budget for approval under the provisions of the Paperwork Reduction Act (44 U.S.C. Chapter 35). Copies of the proposed collection of information and related forms may be obtained by contracting the USGS Clearance Officer at the phone number listed below. OMB has up to 60 days to approve or disapprove the information collection but may respond after 30 days; therefore, public comments should be submitted to OMB within 30 days in order to assure their maximum consideration. Comments and suggestions on the requirement should be made directly to the Desk Officer for the Interior Department, Office of Regulatory Affairs, Office of Management and Budget, Washington, DC 20503 and to the USGS Clearance Officer, U.S. Geological Survey, 807 National Center, Reston, VA 20192.

As required by OMB regulations at CFR 1320.8(d)(1), the U.S. Geological Survey solicits specific public comments regarding the proposed information collection as to:

1. Whether the collection of information is necessary for the proper performance of the functions of the USGS, including whether the information will have practical utility;
2. The accuracy of the USGS estimate of the burden of the collection of information, including the validity of the methodology and assumptions used;
3. The utility, quality, and clarity of the information to be collected; and,
4. How to minimize the burden of the collection of information on those who are to respond, including the use of appropriate automated electronic, mechanical, or other forms of information technology.

Title: Ferrous Metals Surveys.

Current OMB approval number: 1028–0053.

Abstract: Respondents supply the U.S. Geological Survey with domestic production and consumption data on

nonferrous and related metals. This information will be published as monthly, quarterly, and annual reports for use by Government agencies, industry, and the general public.

Bureau form number: Various (32 forms).

Frequency: Monthly, Quarterly, and Annual.

Description of respondents: Producers and Consumers of nonferrous and related metals.

Annual Responses: 5,897.

Annual burden hours: 4,791.

Bureau of clearance officer: John E. Cordyack, Jr., 703–648–7313.

John H. DeYoung, Jr.,

Chief Scientist, Minerals Information Team.

[FR Doc. 02–19903 Filed 8–6–02; 8:45 am]

BILLING CODE 4310–Y7–M

DEPARTMENT OF THE INTERIOR

U.S. Geological Survey

Request for Public Comments on Proposed Information Collection Submitted to the Office of Management and Budget for Review Under the Paperwork Reduction Act

The proposal for the collection of information described below has been submitted to the Office of Management and Budget for approval under the provisions of the Paperwork Reduction Act (44 U.S.C. Chapter 35). Copies of the proposed collection of information and related forms may be obtained by contacting the Bureau's clearance officer at the phone number listed below. OMB has up to 60 days to approve or disapprove the information collection, but may respond after 30 days; therefore public comments should be submitted to OMB within 30 days in order to assure their maximum consideration. Comments and suggestions on the requirement should be made directly to the Desk Officer for the Interior Department, Office of Information and Regulatory Affairs, Office of Management and Budget, Washington, DC 20503, and to the Bureau Clearance Officer, U.S. Geological Survey, 807 National Center, 12201 Sunrise Valley Drive, Reston, Virginia 20192.

Specific public comments are requested as to:

1. Whether the collection of information is necessary for the proper performance of the functions on the bureaus, including whether the information will have practical utility;

2. The accuracy of the bureau's estimate of the burden of the collection of information, including the validity of the methodology and assumptions used:

3. The quality, utility, and clarity of the information to be collected; and

4. How to minimize the burden of the collection of information on those who are to respond, including the use of appropriate automated, electronic, mechanical, or other forms of information technology.

Title: Earthquake Report.

Current OMB approval number: 1028–0048.

Abstract: Respondents supply information on the effects of the shaking from an earthquake—on themselves personally, buildings and their effects, other man-made structures, and ground effects such as faulting or landslides. This information will be used in the study of the hazards from earthquakes and used to compile and publish the annual USGS publication ''United States Earthquakes''.

Bureau form number: 9–3013.

Frequency: After each earthquake.

Description of respondents: State and local employees; and, the general public.

Estimated completion time: 0.1 hours.

Annual responses: 100,000.

Annual burden hours: 10,000 hours.

Bureau clearance officer: John Cordyack 703–648–7313.

Dated: June 28, 2002.

P. Patrick Leahy,

Associate Director for Geology.

[FR Doc. 02–19904 Filed 8–6–02; 8:45 am]

BILLING CODE 4310–Y7–M

DEPARTMENT OF THE INTERIOR

Bureau of Land Management

[BC–621–1830–PF–24 1A]

Extension of Approved Information Collection, OMB Approval Number 1004–0187

AGENCY: Bureau of Land Management, Interior.

ACTION: Notice and request for comments.

SUMMARY: In accordance with the Paperwork Reduction Act of 1995, the Bureau of Land Management (BLM) requests the office of Management and Budget (OMB) to extend an existing approval to collect social security numbers or taxpayer identification numbers (SSN/TIN) from entities doing business with BLM. The BLM needs this information in case an entity fails to timely pay money owed, in which case BLM may refer the matter to the Treasury Department for collection. BLM uses Form 1372–6 to collect this information for debt collection purposes only under the Debt Collection Improvement Act of 1996.

DATES: You must submit your comments to BLM at the address below on or before October 7, 2002. BLM will not necessarily consider any comments received after the above date.

ADDRESSES: You may mail comments to: Regulatory Affairs Group (WO–630), Eastern States Office, 7450 Boston Blvd., Springfield, Virginia 22153.

You may send comments via Internet to: *WOComment@blm.gov.* Please include ''ATTN: 1004–0187'' and your name and address with your comments.

You may deliver comments to the Bureau of Land Management, Administrative Record, Room 401, 1620 L Street, NW., Washington, DC.

Comments will be available for public review at the L Street address during regular business hours (7:45 a.m. to 4:15 p.m.) Monday through Friday.

FOR FURTHER INFORMATION CONTACT: You may contact Dorothy Butler, Branch Chief, Collection and Billings (BC–621), National Business Center, Denver, Colorado, on (303) 236–6332 (Commercial or FTS). Persons who use a telecommunication device for the deaf (TDD) may call the Federal Information Relay Service (FIRS) on 1–800–877–8330, 24 hours a day, seven days a week, to contact Ms. Butler.

SUPPLEMENTARY INFORMATION: 5 CFR 1320.12(a) requires that we provide a 60-day notice in the **Federal Register** concerning a collection of information to solicit comments on:

(a) Whether the collection of information is necessary for the proper functioning of the agency, including whether the information will have practical utility;

(b) the accuracy of our estimates of the information collection burden, including the validity of the methodology and assumptions we use;

(c) ways to enhance the quality, utility, and clarity of the information collected; and

(d) ways to minimize the information collection burden on those who are to respond, including the use of appropriate automated, electronic, mechanical, or other technological collection techniques or other forms of information technology.

The Debt Collection Improvement Act of 1996 (DCIA), 31 U.S.C. 3701, contains a number of provisions that affect how BLM does business. One of the more significant provisions allows BLM to refer debts delinquent over 180 days to the Treasury Department for collection. Another provision gives the Treasury Department increased flexibility in seeking to collect the debts by various

offsets of payments, including tax refunds.

The DCIA requires that all Federal disbursements include the payee's SSN/TIN. This information aids the Treasury Department in matching debtors to payments and in seeking those payments from the debtors. BLM uses Form 1372–6 to collect the payee's full name, address, and the SSN/TIN. The SSN/TIN data is protected under the Privacy Act.

Based on BLM's experience administering this program, we estimate the public reporting burden is 1 minute to complete Form 1372–6. These estimates include the time spent on research, gathering, and assembling information, reviewing instructions, and completing the respective form. In FY 1999, BLM estimated 120,000 respondents the first year with a total annual burden of 20,000 hours. The number was expected to decrease the second year to 5,000 respondents with a total annual burden of 83 hours. Respondents are those entities who do business with BLM which include licensees, permittees, lessees, and contract holders. Individuals who pay one-time recreation fees are not affected.

Any member of the public may request and obtain, without charge, a copy of BLM Form 1372–6 by contacting the person identified under **FOR FURTHER INFORMATION CONTACT.**

BLM will summarize all responses to this notice and include them in the request for OMB approval. All comments will become a matter of a public record.

Dated: August 1, 2002.

Michael H. Schwartz,

Bureau of Land Management, Information Collection Clearance Officer.

[FR Doc. 02–19887 Filed 8–6–02; 8:45 am]

BILLING CODE 4310–84–M

DEPARTMENT OF THE INTERIOR

Bureau of Reclamation

Information Collection Activities; Proposed Collection; Comment Request; Extension.

AGENCY: Bureau of Reclamation, Interior.

ACTION: Notice and request for comments.

SUMMARY: In accordance with the Paperwork Reduction Act of 1995, this notice announces that the Bureau of Reclamation (Reclamation) intends to submit for approval the following extension of a currently approved information collection: Right-of-Use Application. Before submitting the information collection request to the Office of Management and Budget for approval, Reclamation is soliciting comments on specific aspects of the information collection.

DATES: Comments on this notice must be received by October 7, 2002.

ADDRESSES: Address all comments concerning this notice to the Bureau of Reclamation, Office of Policy, Attention: Gene Munson (D–5200), PO Box 25007, Denver, CO 80225–0007.

FOR FURTHER INFORMATION CONTACT: Gene Munson, 303–445–2898.

SUPPLEMENTARY INFORMATION: Comments are invited on: (a) Whether the proposed collection of information is necessary for the proper performance of Reclamation's functions, including whether the information will have practical use; (b) the accuracy of Reclamation's estimated time and cost burdens of the proposed collection of information, including the validity of the methodology and assumptions used; (c) ways to enhance the quality, use, and clarity of the information to be collected; and (d) ways to minimize the burden of the collection of information on respondents, including increased use of automated collection techniques or other forms of information technology. Consideration will be given to comments and suggestions submitted within 60 days of this publication.

Title: Right-of-Use Application.

OMB No.: 1006–0003.

Abstract: Reclamation is responsible for over 8 million acres of land in the 17 western States. Parties wishing to use any of that land must submit a Right-of-Use application. Reclamation will review the application and determine whether the granting of the right-of-use is compatible with the present or future uses of the land. After preliminary review of the application, the applicant will be advised of the estimated administrative costs for processing the application. In addition to the administrative costs, the applicant will also be required to pay a land use fee based on the fair market value for such land use, as determined by Reclamation. If the Right-of-Use application is for a bridge, building, or other type of major structure, Reclamation may require that all plans and specifications be signed and sealed by a professional engineer licensed by the State where the work is proposed. Linear facilities such as roads, pipelines, and transmission lines require a centerline survey defining the limits of the requested right-of-use.

Description of respondents: Individuals, corporations, companies, and State and local entities that desire to use Reclamation lands.

Frequency: Each time a Right of Use is requested.

Estimated completion time: An average of 2 hours per respondent.

Annual responses: 500 respondents.

Annual burden hours: 1,000.

Our practice is to make comments, including names and home addresses of respondents, available for public review. Individual respondents may request that we withhold their home address from public disclosure, which we will honor to the extent allowable by law. There also may be circumstances in which we would withhold a respondent's identity from public disclosure, as allowable by law. If you wish us to withhold your name and/or address, you must state this prominently at the beginning of your comment. We will make all submissions from organizations or businesses, and from individuals identifying themselves as representatives or officials of organizations or businesses, available for public disclosure in their entirety.

Dated: July 23, 2002.

Elizabeth Cordova-Harrison,

Deputy Director, Office of Policy.

[FR Doc. 02–19901 Filed 8–6–02; 8:45 am]

BILLING CODE 4310–MN–M

DEPARTMENT OF JUSTICE

Office Management Division; Agency Information Collection Activities: Proposed Collection; Comments Requested

ACTION: 60-Day notice of information collection under review: Extension of currently approved collection; Department of Justice federal Coal Lease Review Information.

The Department of Justice (DOJ), Antitrust Division has submitted the following information collection request to the Office of Management and Budget (OMB) for review and approval in accordance with the Paperwork Reduction Act of 1995. The proposed information collection is published to obtain comments from the public and affected agencies. Comments are encouraged and will be accepted for ''sixty days'' until October 7, 2002. This process is conducted in accordance with 5 CFR 1320.10.

If you have comments especially on the estimated public burden or associated response time, suggestions, need a copy of the proposed information collection instrument, or additional information, please contact Jill Ptacek,

Antitrust Division, Department of Justice, 325 7th St., NW., Washington, DC 20350.

Written comments or suggestions from the public and affected agencies concerning the proposed collection of information are encouraged. Your comments should address one or more of the following points:

(1) Evaluate whether the proposed collection of information is necessary for the proper performance of the functions of the agency, including whether the information will have practical utility;

(2) Evaluate the accuracy of the agency's estimate of the burden of the proposed collection of information, including the validity of the methodology and assumptions used;

(3) Enhance the quality, utility, and clarity of the information to be collected; and

(4) Minimize the burden of the collection of information on those who are to respond, including through the use of appropriate automated, electronic, mechanical, or other technical collection techniques or other forms of information technology, *e.g.,* permitting electronic submission of responses.

Overview of this information collection:

(1) *Type of Information Collection:* Extension of currently approved collection.

(2) *Title of the Form/Collection:* Department of Justice Federal Coal Lease Review Information.

(3) *Agency form number, if any, and the applicable component of the Department of Justice sponsoring the collection:* Form Number(s): ATR–139; ATR–140. Antitrust Division, Department of Justice.

(4) *Affected public who will be asked or required to respond, as well as a brief abstract:* Primary: Business or other for profit. Other: None. Abstract: The Department of Justice evaluates the competitive impact of issuances, transfers and exchanges of federal coal leases. These forms seek information regarding a prospective coal lessee's coal reserves subject to the federal lease. The Department uses this information to determine whether the coal lease transfer is consistent with the antitrust laws.

(5) *An estimate of the total number of respondents and the amount of time estimated for an average respondent to respond:* 20 responses per year at two hours per response.

(6) *An estimate of the total public burden (in hours) associated with the collection:* 40 annual burden hours.

If additional information is required contact: Robert B. Briggs, Department Clearance Officer, Information Management and Security Staff, Justice Management Division, United States Department of Justice, Patrick Henry Building, Suite 1600, 601 D Street, NW., Washington, DC 20530.

Dated: August 1, 2002.

Robert B. Briggs,

Department Clearance Officer, United States Department of Justice.

[FR Doc. 02–19859 Filed 8–6–02; 8:45 am]

BILLING CODE 4410–30–M

DEPARTMENT OF JUSTICE

Executive Office for Immigration Review; Agency Information Collection Activities: Proposed Collection; Comments Requested

ACTION: 30-Day Notice of Information Collection Under Review: Extension of a currently approved Fee Waiver Request.

The Department of Justice (DOJ), Executive Office for Immigration Review (EOIR) has submitted the following information collection request to the Office of Management and Budget (OMB) for review and approval in accordance with the Paperwork Reduction Act of 1995. The proposed information collection is published to obtain comments from the public and affected agencies. This proposed information collection was previously published in the *Federal Register* Volume 67, Number 71, page 18036 on April 12, 2002, allowing for a 60 day comment period. The purpose of this notice is to allow for an additional 30 days for public comment until September 6, 2002. This process is conducted in accordance with 5 CFR 1320.10.

Written comments and/or suggestions regarding the items contained in this notice, especially the estimated public burden and associated response time, should be directed to The Office of Management and Budget, Office of Information and Regulatory Affairs, Attention Department of Justice Desk Officer, Washington, DC. 20503. Additionally, comments may be submitted to OMB via facsimile to (202) 395–7285.

Request written comments and suggestions from the public and affected agencies concerning the proposed collection of information are encouraged. Your comments should address one or more of the following four points:

(1) Evaluate whether the proposed collection of information is necessary for the proper performance of the functions of the agency, including whether the information will have practical utility;

(2) Evaluate the accuracy of the agencies estimate of the burden of the proposed collection of information, including the validity of the methodology and assumptions used;

(3) Enhance the quality, utility, and clarity of the information to be collected; and

(4) Minimize the burden of the collection of information on those who are to respond, including through the use of appropriate automated, electronic, mechanical, or other technological collection techniques or other forms of information technology, e.g., permitting electronic submission of responses.

Overview of This Information Collection

(1) *Type of Information Collection:* Extension of a Currently Approved Collection.

(2) *Title of the Form:* Fee Waiver Request.

(3) *Agency form number, if any, and the applicable component of the Department of Justice Sponsoring the collection:* Form EOIR 26A, Executive Office for Immigration Review, United States Department of Justice.

(4) *Affected Public who will be asked to respond, as well as brief abstract:* Primary: An alien appealing an Immigration Judge's decision. Other: None Abstract: The information collected on EOIR–26A will be used to determine whether the requisite fee for a motion or appeal will be waived due to an alien's financial situation.

(5) *An estimate of the total number of respondents and the amount of time estimated for an average respondent to respond:* 1,500 responses are estimated annually with a average of one hour per response.

(6) *An estimate of the total public burden (in hours) associated with the collection:* 1,500 hours annually.

If additional information is required contact: Mrs. Brenda E. Dyer, Deputy Clearance Officer, United States Department of Justice, Information Management and Security Staff, Justice Management Division, suite 1600, Patrick Henry Building, 601 D Street NW., Washington, DC 20530.

Dated: July 31, 2002.

Brenda E. Dyer,

Department Deputy Clearance Officer, United States Department of Justice.

[FR Doc. 02–19860 Filed 8–6–02; 8:45 am]

BILLING CODE 4410–30–M

DEPARTMENT OF JUSTICE

Drug Enforcement Administration

Manufacturer of Controlled Substances; Notice of Application

Pursuant to section 1301.33(a) of Title 21 of the Code of Federal Regulations (CFR), this is notice that on April 11, 2002, Applied Science Labs, Division of Alltech Associates, Inc., 2701 Carolean Industrial Drive, State College, Pennsylvania 16801, made application by renewal to the Drug Enforcement Administration (DEA) for registration as a bulk manufacturer of the basic classes of controlled substances listed below:

Drug	Schedule
Methcathinone (1237)	I
N-Ethylamphetamine (1475)	I
N,N-Dimethylamphetamine (1480)	I
4-Methylaminorex (cis isomer) (1590).	I
Lysergic acid diethylamide (7315)	I
Mescaline (7381)	I
3,4-Methylenedioxyamphetamine (7400).	I
N-Hydroxy-3,4-methylenedioxy-amphetamine (7402).	I
3,4-Methylenedioxy-N-ethylam-phetamine (7404).	I
3,4-Methylenedioxymeth-amphetamine (7405).	I
N-Ethyl-1-phenylcyclohexylamine (7455).	I
1-(1-Phenylcyclohexyl)pyrrolidine (7458).	I
1-[1-(2-Thienyl)cyclohexyl] piper-idine (7470).	I
Dihydromorphine (9145)	I
Normorphine (9313)	I
1-Phenylcyclohexylamine (7460)	II
Phencyclidine (7471)	II
Phenylacetone (8501)	II
1-Piperidinocyclohexane-carbonitrille (8603).	II
Cocaine (9041)	II
Codeine (9050)	II
Dihydrocodeine (9120)	II
Benzoylecgonine (9180)	II
Morphine (9300)	II
Noroxymorphone (9668)	II

The firm plans to manufacture small quantities of the listed controlled substances for reference standards.

Any other such applicant and any person who is presently registered with DEA to manufacture such substance may file comments or objections to the issuance of the proposed registration.

Any such comments or objections may be addressed, in quintuplicate, to the Deputy Assistance Administrator, Office of Diversion Control, Drug Enforcement Administration, United States Department of Justice, Washington, DC 20537, Attention: DEA Federal Register Representative (CCR), and must be filed no later than October 7, 2002.

Dated: June 28, 2002.

Laura M. Nagel,

Deputy Assistant Administrator, Office of Diversion Control, Drug Enforcement Administration.

[FR Doc. 02–19895 Filed 8–6–02; 8:45 am]

BILLING CODE 4410–09–M

DEPARTMENT OF JUSTICE

Drug Enforcement Administration

Manufacturer of Controlled Substances; Notice of Application

Pursuant to section 1301.33(a) of Title 21 of the Code of Federal Regulations (CFR), this is notice that on December 13, 2001, Johnson Matthey, Inc., Custom Pharmaceuticals Department, 2003 Nolte Drive, West Deptford, New Jersey 08066, made application by renewal to the Drug Enforcement Administration (DEA) for registration as a bulk manufacturer of the basic classes of controlled substances listed below:

Drug	Schedule
Tetrahydrocannabinols (7370)	I
Difenoxin (9168)	I
Propiram (9649)	I
Amphetamine (1100)	II
Methylphenidate (1724)	II
Codeine (9050)	II
Oxycodone (9143)	II
Hydromorphone (9150)	II
Hydrocodone (9193)	II
Meperdine (9230)	II
Morphine (9300)	II
Thebaine (9333)	II
Alfentanil (9737)	II
Sufentanil (9740)	II
Fentanyl (9801)	II

The firm plans to manufacture the listed controlled substances in bulk to supply final dosage form manufacturers.

Any other such applicant and any person who is presently registered with DEA to manufacture such substances may file comments or objections to the issuance of the proposed registration.

Any such comments or objections may be addressed, in quintuplicate, to the Deputy Assistant Administrator, Office of Diversion Control, Drug Enforcement Administration, United States Department of Justice, Washington, DC 20537, Attention: DEA Federal Register Representative (CCR), and must be filed no later than October 7, 2002.

Dated: June 28, 2002.

Laura M. Nagel,

Deputy Assistant Administrator, Office of Control, Drug Enforcement Administration.

[FR Doc. 02–19896 Filed 8–6–02; 8:45 am]

BILLING CODE 4410–09–M

DEPARTMENT OF LABOR

Employment and Training Administration

Notice of Determinations Regarding Eligibility To Apply for Worker Adjustment Assistance and NAFTA Transitional Adjustment Assistance

In accordance with Section 223 of the Trade Act of 1974, as amended, the Department of Labor herein presents summaries of determinations regarding eligibility to apply for trade adjustment assistance for workers (TA–W) issued during the period of July, 2002.

In order for an affirmative determination to be made and a certification of eligibility to apply for worker adjustment assistance to be issued, each of the group eligibility requirements of Section 222 of the Act must be met.

(1) that a significant number or proportion of the workers in the workers' firm, or an appropriate subdivision thereof, have become totally or partially separated,

(2) that sales or production, or both, of the firm or sub-division have decreased absolutely, and

(3) that increases of imports of articles like or directly competitive with articles produced by the firm or appropriate subdivision have contributed importantly to the separations, or threat thereof, and to the absolute decline in sales or production.

Negative Determinations for Worker Adjustment Assistance

In each of the following cases the investigation revealed that criterion (3) has not been met. A survey of customers indicated that increased imports did not contribute importantly to worker separations at the firm.

TA–W–41,588; Osram Sylvania Products, Inc., Central Falls, RI

TA–W–41,580; Pacific Northwest Sugar Co., Moses Lake, WA

TA–W–41.559; Southern Button Industries, Inc., Rivera Beach, FL

TA–W–41,522; John W. Hancock, Jr., Inc. A Subsidiary of Roanoke Electric Steel Corp., Salem, VA

TA–W–41,516; Washington Mould Co., Washington, PA

TA–W–41,402; Instron-Satec Systems, Grove City, PA

TA–W–41,435; Imperial Holly Sugar, Hereford, TX

In the following cases, the investigation revealed that the criteria for eligibility have not been met for the reasons specified.

The workers firm does not produce an article as required for certification under Section 222 of the Trade Act of 1974.

TA–W–41,572; RMH Teleservices, Inc., Scranton, PA

TA–W–41,000; Advanced Service, Inc., A Subsidiary of General Electric Appliances, Memphis, TN

The investigation revealed that criteria (2) has not been met. Sales or production did not decline during the relevant period as required for certification.

TA–W–41,729; Liz Claiborne, Inc., Mt. Pocono, PA

The investigation revealed that criteria (1) has not been met. A Significant number or proportion of the workers did not become totally or partially separated from employment as required for certification.

TA–W–41,577; Minnesota Mining and Manufacturing Co., Microinternconnect Systems Div., Columbia, MO

Increased imports did not contribute importantly to worker separations at the firm.

TA–W–41,597; Waukesha Engine Div., Waukesha, WI

TA–W–41,578; Holophane, A Div. Of Acuity Lighting Group, Inc., Springfield, OH

TA–W–41,501; Carolina Brand Foods, Div. Of Tyson Foods Group, Holly Ridge, NC

TA–W–41,504; US Timber Co., Camas Prairie Lumber Div., Craigmont, ID

TA–W–41,540; Anvil International, Inc., A Subsidiary of Mueller Group, Inc., Henderson, TN

Affirmative Determinations for Worker Adjustment Assistance

The following certifications have been issued; the date following the company name and location of each determination references the impact date for all workers of such determination.

TA–W–41,585; C and M Knitting Mills, Inc., Maspeth, NY: May 2, 2001.

TA–W–41,567; Vaughan-Bassett Furniture Co., Inc., Virginia House Furniture Div., Atkins, VA: May 7, 2001.

TA–W–41,561; Casco Products Corp., Bridgeport, CT: April 29, 2001.

TA–W–41,553; Astechnologies, Inc., Laminated Products Group, Monroe, MI: April 19, 2001.

TA–W–41,530; Martin Color-FI, Palmetto Spinning Yarn Div., Laurens, SC: April 12, 2001.

TA–W–41,514; Aladdin Industries, LLC, Nashville, TN: April 19, 2001.

TA–W–41,506; Ampco Metal, Inc., Milwaukee, WI: April 10, 2001.

TA–W–41,445; Quantegy, Inc., Opelika, AL: January 27, 2002.

TA–W–41,212; Ametek Specialty Motors, Hudson, WI: March 25, 2001.

TA–W–40,666; Loren Castings, Inc., Loren Industries, Hollywood, FL: December 4, 2000.

TA–W–39,253; Federal Mogul, Abex Friction Product, Salisbury, NC: May 3, 2000.

Also, pursuant to Title V of the North American Free Trade Agreement Implementation Act (Pub. L. 103–182) concerning transitional adjustment assistance hereinafter called (NAFTA–TAA) and in accordance with Section 250(a), Subchaper D, Chapter 2, Title II, of the Trade Act as amended, the Department of Labor presents summaries of determinations regarding eligibility to apply for NAFTA–TAA issued during the months of July, 2002.

In order for an affirmative determination to be made and a certification of eligibility to apply for NAFTA–TAA the following group eligibility requirements of Section 250 of the Trade Act must be met:

(1) That a significant number or proportion of the workers in the workers' firm, or an appropriate subdivision thereof, (including workers in any agricultural firm or appropriate subdivision thereof) have become totally or partially separated from employment and either—

(2) That sales or production, or both, of such firm or subdivision have decreased absolutely,

(3) That imports from Mexico or Canada of articles like or directly competitive with articles produced by such firm or subdivision have increased, and that the increases imports contributed importantly to such workers' separations or threat of separation and to the decline in sales or production of such firm or subdivision; or

(4) That there has been a shift in production by such workers' firm or subdivision to Mexico or Canada of articles like or directly competitive with articles which are produced by the firm or subdivision.

Negative Determinations NAFTA–TAA

In each of the following cases the investigation revealed that criteria (3) and (4) were not met. Imports from Canada or Mexico did not contribute importantly to workers' separations. There was no shift in production from the subject firm to Canada or Mexico during the relevant period.

NAFTA–TAA–05674; Loren Castings, Inc., Loren Industries, Hollywood, FL

NAFTA–TAA–06066 & A; Motorola, Inc., Semiconductor Products Sector, MOS 5, Mesa, AZ, Semiconductor Products Sector, MOS 6, Mesa, AZ

NAFTA–TAA–06177; US Timber Co., Camas Prairie Lumber Div., Craigmont, ID

NAFTA–TAA–06202; Pacific Northwest Sugar Co., Moses Lake, WA

NAFTA–TAA–06136; International Utility Structures, Inc., Batesville, AR

NAFTA–TAA–06176; Northstar Aerospace (Chicago), Inc., A Div. of Northstar Aerospace, Inc., Formerly Derlan Industries, Inc., Bedford Park, IL

NAFTA–TAA–06188; Martin Color-FI, Palmetto Spinning Yarn Div., Laurens, SC

The investigation revealed that the criteria for eligibility have not been met for the reasons specified.

The investigation revealed that workers of the subject firm did not produce an article within the meaning of Section 250(a) of the Trade Act, as amended.

NAFTA–TAA–06345; The News Group, Midwest Div., A Div. of Great Midwest News, LLC, Jackson, MS

NAFTA–TAA–06148; Stanley Furniture Co., Inc., Stanleytown, VA

NAFTA–TAA–06049; Jacobs Sverdrup, Amherst, NY

Affimative Determinations NAFTA–TAA

NAFTA–TAA–06157; Astechnologies, Inc. Laminated Products Group, Monroe, MI: April 19, 2001.

NAFTA–TAA–06264; Washington Garment Co., Inc., Washington, NC: April 29, 2001.

NAFTA–TAA–05795; Lakemont Manufacturing Co., Inc., Lakemont, GA: January 24, 2001

NAFTA–TAA–06158; Fayette Cotton Mill, Inc. A Subsidiary of Union Underwear Co., Inc., A Subsidiary of Fruit of The Loom, Inc., Fayette, AL: April 29, 2001.

#NAFTA–TAA–06325; Metso Minerals, Inc., Clintonville, WI: June 25, 2001.

NAFTA–TAA–06340; Solectron Corp., West Palm Beach Interconnect and C–Mac Microcircuits, West Palm Beach, FL: July 5, 2001.

NAFTA–TAA–06274; Meyersdale Manufacturing Co., Div. Of Elbeco, Inc., Meyersdale, PA: May 29, 2001.

I hereby certify that the aforementioned determinations were issued during the months of July, 2002.

Copies of these determinations are available for inspection in Room C–5311, U.S. Department of Labor, 200 Constitution Avenue, NW, Washington, DC 20210 during normal business hours or will be mailed to persons who write to the above address.

Dated: July 26, 2002.

Edward A. Tomchick,

Director, Division of Trade Adjustment Assistance.

[FR Doc. 02–19957 Filed 8–6–02; 8:45 am]

BILLING CODE 4510–30–P

DEPARTMENT OF LABOR

Employment and Training Administration

[TA–W–40,018 and NAFTA–05269]

Trailmobile Trailer, LLC, Liberal, KS; Notice of Negative Determination Regarding Application for Reconsideration

By application postmarked May 14, 2002, the petitioners requested administrative reconsideration of the Department's negative determination regarding eligibility for workers and former workers of the subject firm to apply for Trade Adjustment Assistance (TAA) under petition TA–W–40,018 and North American Free Trade Agreement-Transitional Adjustment Assistance (NAFTA–TAA) under petition NAFTA–5269. The TAA and NAFTA–TAA denial notices applicable to workers of Trailmobile Trailer, LLC, Liberal, Kansas were signed on April 26, 2002 and April 29, 2002, respectively and published in the **Federal Register** on May 17, 2002 (67 FR 35143 & 35144, respectively).

Pursuant to 29 CFR 90.18(c) reconsideration may be granted under the following circumstances:

(1) If it appears on the basis of facts not previously considered that the determination complained of was erroneous;

(2) If it appears that the determination complained of was based on a mistake in the determination of facts not previously considered; or

(3) If in the opinion of the Certifying Officer, a misinterpretation of facts or of the law justified reconsideration of the decision.

The TAA petition, filed on behalf of workers at Trailmobile Trailer, LLC, Liberal, Kansas engaged in employment related to the production of dry freight and refrigerator trailers, was denied because the ''contributed importantly'' group eligibility requirement of Section 222(3) of the Trade Act of 1974, as amended, was not met. The investigation revealed that the subject firm did not import dry freight trailers and refrigerator trailers during the relevant period. The investigation also revealed that the predominant cause of worker separations at the subject firm was a domestic shift of production to an affiliated facility.

The NAFTA–TAA petition for the same worker group was denied because criteria (3) and (4) of the group eligibility requirements in paragraph (a)(1) of Section 250 of the Trade Act, as amended, were not met. The investigation revealed that the subject firm neither imported dry freight or refrigerator trailers from Canada or Mexico nor shifted production of dry freight or refrigerator trailers to Canada or Mexico. The investigation further revealed that the predominant cause of worker separations at the subject firm was a domestic shift of production to an affiliated facility.

The petitioner alleges that since all (three) domestic company plants closed and the company maintains a production plant in Canada, it is only logical that subject plant production would have been shifted to the affiliated Canadian plant.

A review of the initial decision and further contact with the company show that subject plant production was shifted to Charleston, Illinois. Based on information provided by the company, the subject plant was designed to produce only refrigerated truck trailers and was the only company location to produce these products. The plant never reached full planned employment or production. The plant was built in anticipation of acquiring new customers for a fleet type refrigerated trailer. These customers did not materialize. For a short time, dry van trailers with insulated panels were built in Liberal in addition to refrigerated trailers in an attempt to bring some production into the plant. Production of the fleet type refrigerated trailers ceased as of January 12, 2001. Specialty refrigerated trailers continued to be built in the affiliated Charleston, Illinois plant. No subject plant production of refrigerated trailers was ever shifted to Canada. With the closure of the three domestic sites by the latter part of 2001, the refrigerated trailer production was eliminated by the company and not shifted to Canada. The dry van trailers (3–4 percent of plant production) accounted for an extremely small portion of the work performed at the subject plant and thus any potential imports of this product cannot be considered as contributing importantly to the layoffs at the subject plant.

The petitioner further indicated that the plant worked in concert with an affiliated plant located in Missisaugua (Toronto), Canada and that on several occasions the plant sent equipment used in the trailer manufacturing to Canada, such as a vacuum lifter for roof mounting. The petitioner also indicated that one of the plant's C-frames for hydraulic punch Huck units was also sent to Canada.

The Canadian plant did not produce the major product the subject plant produced (refrigerated trailers) and therefore the working of the two plants in concert is not relevant in meeting the eligibility requirements of Section 222 or Section 250 of the Trade Act. Also, any machinery shipped to Canada was used to produce products other than those produced by the subject plant, and thus are not relevant factors in meeting eligibility requirements of Section 222 or Section 250 of the Trade Act.

Conclusion

After review of the application and investigative findings, I conclude that there has been no error or misinterpretation of the law or of the facts which would justify reconsideration of the Department of Labor's prior decisions. Accordingly, the application is denied.

Signed at Washington, DC, this 26th day of July, 2002.

Edward A. Tomchick,

Director, Division of Trade Adjustment Assistance.

[FR Doc. 02–19964 Filed 8–6–02; 8:45 am]

BILLING CODE 4510–30-P

DEPARTMENT OF LABOR

Employment and Training Administration

[TA–W–40,548]

BP Exploration Alaska, Inc. Prudhoe Bay, AK; Notice of Revised Determination on Reconsideration

By letter of May 30, 2002, the company requested administrative reconsideration regarding the Department's Negative Determination Regarding Eligibility to Apply for Worker Adjustment Assistance applicable to the workers of the subject firm.

The initial investigation resulted in a negative determination issued on April 25, 2002, based on the finding that the workers of BP Exploration Alaska, Inc., Prudhoe Bay, Alaska did not produce an article within the meaning of section 222(3) of the Act, as amended. The denial notice was published in the

Federal Register on May 2, 2002 (67 FR 22112).

To support the request for reconsideration, the company indicated that the workers were primarily engaged in the production of crude oil. They supplied additional information to help clarify the functions performed at the Prudhoe Bay location. They provided copies of job descriptions.

Based on data supplied by the company in their request for reconsideration and further clarification by the company, it is evident that the workers are primarily engaged in activities related to the production of crude oil.

Layoffs at the subject firm occurred from August 2001 through the April 2002 period. Further layoffs are scheduled throughout the remainder of 2002 into early 2003. Production at the subject facility declined in 2001 over the corresponding 2000 period.

A survey of the firm's major declining customer(s) was conducted regarding their purchases of crude oil during the relevant period. The survey revealed that a major customer increased their purchases of imported crude oil, while decreasing their purchases from the subject firm during the relevant period.

Also, aggregate U.S. imports of crude oil increased from 2000 to 2001. The U.S. import to U.S. production ratio of crude oil was over 150 percent during the 2001 period.

Conclusion

After careful review of the additional facts obtained on reconsideration, I conclude that increased imports of articles like or directly competitive with those produced at BP Exploration Alaska, Inc., Prudhoe Bay, Alaska, contributed importantly to the declines in sales or production and to the total or partial separation of workers at the subject firm. In accordance with the provisions of the Act, I make the following certification:

All workers of BP Exploration Alaska, Inc., Prudhoe Bay, Alaska, who became totally or partially separated from employment on or after December 27, 2000 through two years from the date of this certification, are eligible to apply for adjustment assistance under Section 223 of the Trade Act of 1974.

Signed in Washington, DC this 25th day of July 2002.

Edward A. Tomchick,

Director, Division of Trade Adjustment Assistance.

[FR Doc. 02–19952 Filed 8–6–02; 8:45 am]

BILLING CODE 4510–30–P

DEPARTMENT OF LABOR

Employment and Training Administration

[TA–W–41,043]

Champion Parts, Inc., Beech Creek, Pennsylvania; Notice of Negative Determination Regarding Application for Reconsideration

By application received on June 26, 2002, the International Brotherhood of Electrical Workers (IBEW), Local 1592 requested administrative reconsideration of the Department's negative determination regarding eligibility to apply for Trade Adjustment Assistance (TAA), applicable to workers and former workers of the subject firm. The denial notice applicable to workers of the subject firm was signed on May 23, 2002. The decision was published in the **Federal Register** on June 11, 2002 (67 FR 40004).

Pursuant to 29 CFR 90.18(c) reconsideration may be granted under the following circumstances:

(1) If it appears on the basis of facts not previously considered that the determination complained of was erroneous;

(2) If it appears that the determination complained of was based on a mistake in the determination of facts not previously considered; or

(3) If in the opinion of the Certifying Officer, a misinterpretation of facts or of the law justified reconsideration of the decision.

The petition filed on behalf of workers of Champion Parts, Inc., Beech Creek, Pennsylvania, producing fuel systems and CV products was denied because the ''contributed importantly'' group eligibility requirement of Section 222(3) of the Trade Act of 1974, as amended, was not met. The ''contributed importantly'' test is generally demonstrated through a survey of the worker firm's customers. None of the customers reported importing fuel systems and CV products during the relevant period. The subject firm did not import fuel systems or CV products during the relevant period.

The petitioner indicates that the TAA decision depicts ''that increases of imports of the articles like or directly competitive with articles produced by the firm or appropriate subdivision have contributed importantly to the separation, or threat thereof, and to the absolute declines in sales or production.''

In the above instance, the petitioner appears to be referencing criterion (3) of the group eligibility requirement of Section 222 of the Act. In fact, the decision clearly states that subject firm workers do not meet the eligibility requirement of criterion (3) of Section 222 of the Act.

The petitioner also appears to be concerned that the Department may not have examined the correct products produced by the subject plant during the initial investigation.

A review of the customer survey conducted by the Department shows that none of the customers reported importing fuel systems and CV products (carburetors), during the relevant period. These products account for all production performed at the subject firm during the relevant period.

The petitioner also references plant production of carburetors that was produced during the mid-1990's and also indicates that this product was replaced by imported fuel injectors.

Products produced by the subject plant prior to the year 2000 are outside the scope of the relevant period. As indicated previously, customers reported no like or directly or competitive imports of products produced by the subject plant during the relevant period.

Finally, the petitioner contends that CV component production was not a part of the initial investigation.

A review of plant sales and production data pertaining to CV products (a relatively small portion of plant production) shows increases throughout the relevant period. Thus, import impact is not an issue in regard to this product.

Conclusion

After review of the application and investigative findings, I conclude that there has been no error or misinterpretation of the law or of the facts which would justify reconsideration of the Department of Labor's prior decisions. Accordingly, the application is denied.

Signed at Washington, DC this 25th day of July 2002.

Edward A. Tomchick,

Director, Division of Trade Adjustment Assistance.

[FR Doc. 02–19968 Filed 8–6–02; 8:45 am]

BILLING CODE 4510–30–P

DEPARTMENT OF LABOR

Employment and Training Administration

[TA–W–41,022]

DT Magnetics International, Inc., Knightdale, NC; Notice of Revised Determination on Reconsideration

By letter dated June 15, 2002, a petitioner requested administrative reconsideration regarding the Department's Negative Determination Regarding Eligibility to Apply for Worker Adjustment Assistance, applicable to the workers of the subject firm.

The initial investigation resulted in a negative determination issued on May 31, 2002, based on the finding that imports did not contribute importantly to the layoffs at the subject plant. The denial notice was published in the **Federal Register** on June 21, 2002 (67 FR 42285).

The request for reconsideration is based on the allegation that all production at the subject plant was shifted to the Dominican Republic and China. The petitioner further attached a ''Certification Regarding Eligibility to Apply for Worker Adjustment Assistance'' for a sister plant (TA–W–40,468, DT Magnetics International, Inc., Dover, New Hampshire) producing the same products as the subject plant. That certification was based on the subject firm increasing imports of inductors and transformers.

The Department on further review of the initial investigation and data supplied in the TAA certified DT Magnetics International, Inc., Dover, New Hampshire plant, shows both locations produced inductors and transformers. The subject plant workers were not separately identifiable. The review also showed that subject plant production was shifted to the Dominican Republic and the company increased their reliance on imported inductors and transformers during the relevant period.

Conclusion

After careful review of the additional facts obtained on reconsideration, I conclude that increased imports of articles like or directly competitive with those produced at DT Magnetics, Inc., Knightdale, North Carolina contributed importantly to the declines in sales or production and to the total or partial separation of workers at the subject firm. In accordance with the provisions of the Act, I make the following certification:

All workers of DT Magnetics, Inc., Knightdale, North Carolina who became totally or partially separated from employment on or after February 18, 2001 through two years from the date of this certification, are eligible to apply for adjustment assistance under Section 223 of the Trade Act of 1974.

Signed in Washington, DC this 29th day of July 2002.

Edward A. Tomchick,

Director, Division of Trade Adjustment Assistance.

[FR Doc. 02–19966 Filed 8–6–02; 8:45 am]

BILLING CODE 4510–30–P

DEPARTMENT OF LABOR

Employment and Training Administration

[TA–W–41,239]

Enerflex, Inc., Cedar Mountain, North Carolina; Notice of Revised Determination on Reconsideration

By application of June 23, 2002, the company requested administrative reconsideration regarding the Department's Negative Determination Regarding Eligibility to Apply for Worker Adjustment Assistance, applicable to the workers of the subject firm.

The initial investigation resulted in a negative determination based on the fact that the workers did not produce an article as required for certification under Section 222 of the Trade Act. The denial notice was published in the **Federal Register** on June 11, 2002 (67 FR 40004).

To support the request for reconsideration, the applicant provided additional information explaining the support and production functions performed by the subject workers. The company also indicated that the subject workers were working exclusively for a TAA certified facility.

Upon examination of the data supplied by the applicant, it became apparent that the workers were engaged in activities related to the production of an article. The workers were contract workers engaged in the production of medical x-ray film and the polyester base chemicals used in the manufacture of medical x-ray film at Afga Corporation, Cedar Mountain, North Carolina. The Afga plant was certified for Trade Adjustment Assistance under TA–W–40,818 under Afga Corporation, Brevard, North Carolina on March 31, 2002. The Brevard location is the post office address of the Afga Corporation, the physical plant is located in Cedar Mountain, North Carolina, the same location as the subject firm workers.

Based on the decision in case TA–W–40,818 and data supplied by the subject firm, it has become evident that all criteria have been met for the Enerflex, Inc. contractors working at Afga Corporation engaged in support and production activities at the certified plant. Plant sales, production and employment declined and Afga imports of film like or directly competitive with what the subject plant produced increased during the relevant period.

Conclusion

After careful review of the additional facts obtained on reconsideration, I conclude that increased imports of articles like or directly competitive with those produced at Afga Corporation, Cedar Mountain, North Carolina contributed importantly to the declines in the total or partial separation of Enerflex, Inc., Cedar Mountain, North Carolina workers, who performed work in direct support of the production of medical x-ray film and the polyester base chemicals at the Afga plant. In accordance with the provisions of the Act, I make the following certification:

''Workers of Enerflex, Inc., Cedar Mountain, North Carolina engaged in employment activities related to the production of medical x-ray film and the polyester base chemicals at Afga Corporation, Cedar Mountain, North Carolina, who became totally or partially separated from employment on or after March 29, 2001 through two years from the date of this certification, are eligible to apply for adjustment assistance under Section 223 of the Trade Act of 1974.''

Signed in Washington, DC this 25th day of July 2002.

Edward A. Tomchick,

Director, Division of Trade Adjustment Assistance.

[FR Doc. 02–19969 Filed 8–6–02; 8:45 am]

BILLING CODE 4510–30–P

DEPARTMENT OF LABOR

Employment and Training Administration

[TA–W–40,853]

Hayes Lemmerz International, Inc., Wheels Business Unit, Somerset, KY, Including Leased Workers of Manpower Temporary Services, Somerset, KY, Job Shop Temporary Services, Somerset, KY, CBS Personnel Services, Cincinnati, OH, Technical Staffing Solutions, London, KY; Amended Certification Regarding Eligibility To Apply for Worker Adjustment Assistance

In accordance with section 223 of the Trade Act of 1974 (19 USC 2273) the

Department of Labor issued a Certification of Eligibility to Apply for Worker Adjustment Assistance on March 25, 2002, applicable to workers of Hayes Lemmerz International, Inc., Wheels Business Unit, Somerset, Kentucky. The notice was published in the **Federal Register** on April 5, 2002 (67 FR 16441).

At the request of the State agency, the Department reviewed the certification for workers of the subject firm. Information provided by the State shows that some employees of Hayes Lemmerz International, Inc., Wheels Business Unit were leased from Manpower Temporary Services, Job Shop Temporary Services, CBS Personnel Services, and Technical Staffing Solutions to produce aluminum wheels for the automobile industry at the Somerset, Kentucky facility of the subject firm.

Worker separations occurred at these companies as a result of worker separations a Hayes Lemmerz International, Inc., Wheels Business Unit, Somerset, Kentucky.

Based on these findings, the Department is amending the certification to include leased workers producing aluminum wheels at the Somerset, Kentucky location of the subject firm.

The intent of the Department's certification is to include all workers of Hayes Lemmerz International, Inc., Wheels Business Unit adversely affected by increased imports.

The amended notice applicable to TA–W–40,853 is hereby issued as follows:

All workers of Hayes Lemmerz International, Inc., Wheels Business Unit, Somerset Kentucky, and leased workers of Manpower Temporary Services, Job Shop Temporary Services, Somerset, Kentucky, CBS Personnel Services, Cincinnati, Ohio and Technical Staffing Solutions, London, Kentucky, engaged in employment related to the production of aluminum wheels for the automobile industry for Hayes Lemmerz International, Inc., Wheels Business Unit, Somerset, Kentucky who became totally or partially separated from employment on or after November 26, 2000, through March 25, 2004, are eligible to apply for adjustment assistance under Section 223 of the Trade Act of 1974.

Signed at Washington, DC this 25th day of July, 2002.

Edward A. Tomchick,

Director, Division of Trade Adjustment Assistance.

[FR Doc. 02–19965 Filed 8–6–02; 8:45 am]

BILLING CODE 4510–30–P

DEPARTMENT OF LABOR

Employment and Training Administration

[TA–W–39,947]

Martin Marietta Magnesia Specialties, Inc., Manistee, Michigan; Notice of Revised Determination on Reconsideration

On June 17, 2002, the Department issued an Affirmative Determination Regarding Application on Reconsideration applicable to workers and former workers of the subject firm. The notice will soon be published in the **Federal Register**.

On March 27, 2002 the Department initially denied TAA to workers of Martin Marietta Magnesia Specialties, Inc., Manistee, Michigan producing magnesium oxide and magnesium hydroxide monolithics because the ''contributed importantly'' group eligibility requirement of Section 222 of the Trade Act of 1974, as amended, was not met.

On reconsideration, the Department of Labor conducted a further survey of the subject plants' major declining customer(s) regarding their purchases of magnesium oxide during the relevant period. The survey revealed that a major customer increased their imports of magnesium oxide, while reducing their purchases from the subject firm during the relevant period.

Further review of company data supplied during the initial investigation shows that the company increased their reliance on imported magnesium oxide during the relevant period.

Imports of magnesium oxide contributed importantly to the layoffs at the subject firm based on the combination of increased reliance of imported magnesium oxide by a customer and the company during the relevant period.

Conclusion

After careful review of the additional facts obtained on reconsideration, I conclude that increased imports of articles like or directly competitive with magnesium oxide, contributed importantly to the declines in sales or production and to the total or partial separation of workers of Martin Marietta Magnesia Specialties, Inc., Manistee, Michigan. In accordance with the provisions of the Act, I make the following certification:

All workers of Martin Marietta Magnesia Specialties, Inc., Manistee, Michigan who became totally or partially separated from employment on or after August 13, 2000 through two years of this certification, are eligible to apply for adjustment assistance under Section 223 of the Trade Act of 1974.

Signed in Washington, DC this 25th day of July 2002.

Edward A. Tomchick,

Director, Division of Trade Adjustment Assistance.

[FR Doc. 02–19951 Filed 8–6–02; 8:45 am]

BILLING CODE 4510–30–P

DEPARTMENT OF LABOR

Employment and Training Administration

Investigations Regarding Certifications of Eligibility To Apply for Worker Adjustment Assistance

Petitions have been filed with the Secretary of Labor under Section 221(a) of the Trade Act of 1974 (''the Act'') and are identified in the Appendix to this notice. Upon receipt of these petitions, the Director of the Division of Trade Adjustment Assistance, Employment and Training Administration, has instituted investigations pursuant to Section 221(a) of the Act.

The purpose of each of the investigations is to determine whether the workers are eligible to apply for adjustment assistance under Title II, Chapter 2, of the Act. The investigations will further relate, as appropriate, to the determination of the date on which total or partial separations began or threatened to begin and the subdivision of the firm involved.

The petitioners or any other persons showing a substantial interest in the subject matter of the investigations may request a public hearing, provided such request is filed in writing with the Director, Division of Trade Adjustment Assistance, at the address shown below, not later than August 19, 2002.

Interested persons are invited to submit written comments regarding the subject matter of the investigations to the Director, Division of Trade Adjustment Assistance, at the address shown below, not later than August 19, 2002.

The petitions filed in this case are available for inspection at the Office of the Director, Division of Trade Adjustment Assistance, Employment and Training Administration, U.S. Department of Labor, Room C–5311, 2000 Constitution Avenue, NW., Washington, DC 20210.

Signed at Washington, DC this 15th day of July, 2002.

Edward A. Tomchick,

Director, Division of Trade Adjustment Assistance.

Appendix

PETITIONS INSTITUTED ON 07/15/2002

TA–W	Subject firm (petitioners)	Location	Date of petition	Product(s)
41,808	Newcor (Co.)	Troy, MI	06/24/2002	Ford Oil Pump.
41,809	Encana Energy Resources (Co.).	Butte, MI	06/13/2002	Oil and Gas.
41,810	Mid Western Machinery Co. (Co.).	Joplin, MO	06/06/2002	Rock Drills and Replacement Part.
41,811	Clark Alabama (Co.)	Pell City, AL	06/24/2002	Handling Equipment.
41,812	A.O. Smith (Co.)	Monticello, IN	06/24/2002	C–Frame.
41,813	StarTrek (Co.)	Laramie, WY	05/31/2002	Technical Support.
41,814	Trus Joist (Co.)	Stayton, OR	06/25/2002	I–Joist Products.
41,815	Saunders Mfg. Co. Inc. (Co.)	Winthrop, ME	07/01/2002	Aluminum Clipboards.
41,816	Wisconsin Color Press (Co.)	Milwaukee, WI	06/20/2002	Magazines.
41,817	Arrow SI, Inc. (Co.)	Asheboro, NC	07/02/2002	Replacement Parts.
41,881	Robinson Mfg. (Co.)	Oxford, ME	07/02/2002	Wool/Nylon.
41,819	National Forge Company (Wkrs).	Irvine, PA	06/25/2002	CrankShafts.
41,820	General Cable (IBEW)	Bonham, TX	06/24/2002	Copper Cable.
41,821	Detroit Stoker Company (Wkrs)	Monroe, MI	04/02/2002	Roto Grates.
41,822	Nextec (Wkrs)	Vista, CA	06/11/2002	Textiles, Fabric, Carcovee.
41,823	Austin Farms (Wkrs)	Indianola, MS	06/18/2002	Catfish.
41,824	Spectel MultiLink Inc. (Wkrs)	Andover, MA	06/17/2002	Audio Conferencing Hard and Software.
41,825	Voith Paper (Wkrs)	Appleton, WI	06/19/2002	Paper Producing Machinery.
41,826	Marco Manufacturing (Wkrs)	Seattle, WA	06/28/2002	Fishing Gear and Equipment.
41,827	Motorola (Wkrs.)	Mesa, AZ	06/17/2002	LD–MOS Devices.
41,828	Eagle Picher Technologies (Wkrs).	Quapaw, OK	06/21/2002	Geraniam.
41,829	Aurafin LLC (Wkrs)	Providence, RI	06/26/2002	Gold Hoop Earrings.
41,830	Ameriphone (Wkrs.)	Garden Grove, CA	06/25/2002	Amplified Telephones.
41,831	Accura Tool & Die (Wkrs)	Crystal Lake, IL	04/26/2002	Metal Parts and Molds.
41,832	Alcoa Fujikura Ltd. (Wkrs)	Houston, MS	02/25/2002	Fiber Optical Cables.
41,833	Metso Automation (Wkrs)	Shrewsbury, MA	06/21/2002	Industrial Valves.
41,834	Munsey Products (Co.)	Little Rock, AR	06/19/2002	Small Electrical Appliance.
41,835	Premier Turbines (Co.)	Neosho, MO	06/25/2002	J85 Engine.
41,836	Mansfield Plumbing (Wkrs)	Kilgore, TX	06/03/2002	Toilet Bowls.
41,837	Kurt Manufacturing (Wkrs)	Mpls, MN	07/03/2002	Industrial Machinery.

[FR Doc. 02–19962 Filed 8–6–02; 8:45 am]
BILLING CODE 4510–30–M

DEPARTMENT OF LABOR

Employment and Training Administration

[TA–W–41,576 and TA–W–41,576A]

R&B Falcon Management, Services, Lafayette, LA, and R&B Falcon Management, Services, Houma, LA; Notice of Termination of Investigation

Pursuant to Section 221 of the Trade Act of 1974, an investigation was initiated on May 28, 2002, in response to a petition filed by a company official on behalf of workers at R&B Falcon Management, Services, Lafayette and Houma, Louisiana.

The company official submitting the petition has requested that the petition be withdrawn. Consequently, further investigation in this case would serve no purpose, and the investigation has been terminated.

Signed in Washington, DC this 19th day of July, 2002.

Linda G. Poole,

Certifying Officer, Division of Trade Adjustment Assistance.

[FR Doc. 02–19956 Filed 8–6–02; 8:45 am]
BILLING CODE 4510–30–P

DEPARTMENT OF LABOR

Employment and Training Administration

[TA–W–40,919]

Sovereign Adhesives Incorporated, Formerly Croda Adhesives, Ewing, NJ; Notice of Negative Determination Regarding Application for Reconsideration

By application postmarked of June 7, 2002, a worker requested administrative reconsideration of the Department's negative determination regarding eligibility for workers and former workers of the subject firm to apply for Trade Adjustment Assistance (TAA) under petition TA–W–40,919. The TAA denial notice applicable to workers of Sovereign Adhesives Incorporated, formerly Croda Adhesives, Ewing, New Jersey, was signed on April 30, 2002 and published in the **Federal Register** on May 17, 2002 (67 FR 35143).

Pursuant to 29 CFR 90.18(c) reconsideration may be granted under the following circumstances:

(1) If it appears on the basis of facts not previously considered that the determination complained of was erroneous;

(2) If it appears that the determination complained of was based on a mistake in the determination of facts not previously considered; or

(3) If in the opinion of the Certifying Officer, a mis-interpretation of facts or of the law justified reconsideration of the decision.

The TAA petition, filed on behalf of workers at Sovereign Adhesives Incorporated, formerly Croda Adhesives, Ewing, New Jersey engaged in employment related to the production of adhesives, was denied

because the ''contributed importantly'' group eligibility requirement of Section 222(3) of the Trade Act of 1974, as amended, was not met. The preponderance in the declines in employment at the subject plant was related to Sovereign Specialty Chemicals, Inc. acquiring Croda International Plc Specialty adhesive and coatings business in October 2000. Following this acquisition production was transferred from the Croda plant in Ewing, New Jersey to other Sovereign plants located in the United States.

The petitioner alleges, based on the company's SEC filings, that they have manufacturing plants in Brazil, Belgium and the United Kingdom. The SEC filing states that the Brazilian plant would be a conditional sale. The petitioner indicates the subject plant supplied Latiseal type sealants to Brazil and they would start production on their own and send them to the United States. The petitioner further indicates that the Ewing plant also produced acrylic blends 29–044 and 29–045, which were shipped to American and Canadian customers and subsequently replaced by European imports. The petitioner feels these events were overlooked.

A review of the initial investigation and further contact with the company revealed that the company did not import the sealants or blends as addressed by the petitioner above during the relevant period. The company indicated that any imported products like or directly competitive with what the subject plant produced would be ''less than negligible''.

Further review of the initial investigation shows the preponderance in the declines in employment at the subject plant was related to a domestic shift in plant production to Buffalo, New York and Akron, Ohio. Also, in the initial investigation the company reported no declines in their customer base during the relevant period. Therefore, any potential imports of products ''like or directly competitive'' with what the subject plant produced would not meet the ''contributed importantly'' group eligibility requirement of Section 222(3) of the Trade Act of 1974, as amended.

Conclusion

After review of the application and investigative findings, I conclude that there has been no error or misinterpretation of the law or of the facts which would justify reconsideration of the Department of Labor's prior decisions. Accordingly, the application is denied.

Signed at Washington, DC, this 25th day of July, 2002.

Edward A. Tomchick,

Director, Division of Trade Adjustment Assistance.

[FR Doc. 02–19953 Filed 8–6–02; 8:45 am]

BILLING CODE 4510–30–P

DEPARTMENT OF LABOR

Employment and Training Administration

[TA–W–41,560]

SRAM Corporation, Colorado Springs, CO; Notice of Termination of Investigation

Pursuant to Section 221 of the Trade Act of 1974, an investigation was initiated on May 20, 2002, in response to a petition filed by a company official on behalf of workers at SRAM Corporation, Colorado Springs, Colorado.

The company official submitting the petition has requested that the petition be withdrawn. Consequently, further investigation in this case would serve no purpose, and the investigation has been terminated.

Signed in Washington, DC this 19th day of July, 2002.

Linda G. Poole,

Certifying Officer, Division of Trade Adjustment Assistance.

[FR Doc. 02–19955 Filed 8–6–02; 8:45 am]

BILLING CODE 4510–30–P

DEPARTMENT OF LABOR

Employment and Training Administration

[TA–W–41,515]

Stabilit America, Inc., Glasteel Division, Moscow, TN; Notice of Termination of Investigation

Pursuant to Section 221 of the Trade Act of 1974, an investigation was initiated on May 13, 2002 in response to a worker petition, which was filed on behalf of workers at Stabilit America, Inc., Glasteel Division, Moscow, Tennessee.

The petitioning group of workers was not employed at the subject facility. Consequently, the investigation has been terminated.

Signed in Washington, DC this 23rd day of July, 2002.

Curtis K. Kooser,

Certifying Officer, Division of Trade Adjustment Assistance.

[FR Doc. 02–19954 Filed 8–6–02; 8:45 am]

BILLING CODE 4510–30–P

DEPARTMENT OF LABOR

Employment and Training Administration

[TA–W–41,024]

Whisper Jet, Inc., Sanford, FL; Notice of Termination of Investigation

Pursuant to section 221 of the Trade Act of 1974, an investigation was initiated on March 11, 2002, in response to a petition filed on behalf of workers at Whisper Jet, Sanford, Florida.

The investigation revealed that the petitioners were in fact workers of Vertical Aviation Technologies, Inc., Sanford, Florida.

The petitioner submitting the petition has requested that the petition be withdrawn. Further investigation in this case would serve no purpose, and the investigation has been terminated.

Signed in Washington, DC this 26th day of June, 2002.

Linda G. Poole,

Certifying Officer, Division of Trade Adjustment Assistance.

[FR Doc. 02–19967 Filed 8–6–02; 8:45 am]

BILLING CODE 4510–30–P

DEPARTMENT OF LABOR

Employment and Training Administration

[NAFTA–05844]

Argus International, Inc., Including Leased Workers of ADP Total Source, Medley, FL; Amended Certification Regarding Eligibility To Apply for NAFTA–Transitional Adjustment Assistance

In accordance with Section 250(a), Subchapter D, Chapter 2, Title II, of the Trade Act of 1974, as amended (19 U.S.C. 2273), the Department of Labor issued a Certification of Eligibility to Apply for NAFTA Transitional Adjustment Assistance on May 6, 2002, applicable to workers of Argus International, Inc., Medley, Florida. The notice was published in the **Federal Register** on May 17, 2002 (67 FR 35142).

At the request of the State agency, the Department reviewed the certification for workers of the subject firm. Information provided by the State shows that leased workers of ADP Total Source were employed at Argus International, Inc. to produce ladies', men's and children's apparel at the Medley, Florida location of the subject firm.

Based on these findings, the Department is amending the certification to include leased workers

of ADP Total Source producing ladies', men's and children's apparel at the Medley, Florida location of the subject firm.

The intent of the Department's certification is to include all workers of Argus International, Inc., affected by layoffs and customer imports from Canada and/or Mexico.

The amended notice applicable to NAFTA–05844 is hereby issued as follows:

All workers of Argus International, Inc., Medley, Florida including leased workers of ADP Total Source engaged in employment related to the production of ladies', men's and children's apparel at Argus International, Inc., Medley, Florida, who became totally or partially separated from employment on or after January 7, 2001, through May 6, 2004, are eligible to apply for NAFTA–TAA under Section 250 of the Trade Act of 1974.

Signed in Washington, DC this 25th day of July, 2002.

Edward A. Tomchick,

Director, Division of Trade Adjustment Assistance.

[FR Doc. 02–19960 Filed 8–6–02; 8:45 am]

BILLING CODE 4510–30–P

DEPARTMENT OF LABOR

Employment and Training Administration

[NAFTA 5827]

Carey Industries, Inc., Danbury, CT; Notice of Termination of Investigation

Pursuant to Title V of the North American Free Trade Agreement Implementation Act (Pub. L. 103–182) concerning transitional adjustment assistance, hereinafter called NAFTA–TAA and in accordance with Section 250(a), Subchapter D, Chapter 2, Title II, of the Trade Act of 1974, as amended (19 U.S.C. 2273), an investigation was initiated on January 29, 2002 in response to a petition filed by a company official on behalf of workers at Carey Industries, Inc., Danbury, Connecticut.

The petitioner has requested that the petition be withdrawn. Consequently, further investigation in this case would serve no purpose, and the investigation has been terminated.

Signed in Washington, DC, this 5th day of July, 2002.

Linda G. Poole,

Certifying Officer, Division of Trade Adjustment Assistance.

[FR Doc. 02–19970 Filed 8–6–02; 8:45 am]

BILLING CODE 4510–30–P

DEPARTMENT OF LABOR

Employment and Training Administration

[NAFTA–05943]

F.H. Stoltze Land and Lumber Company, Stoltze Aspen Mills Division, Siguird, UT; Notice of Negative Determination Regarding Application for Reconsideration

By application of July 1, 2002, the petitioner requested administrative reconsideration of the Department's negative determination regarding eligibility for workers and former workers of the subject firm to apply for North American Free Trade Agreement-Transitional Adjustment Assistance (NAFTA–TAA). The NAFTA–TAA denial notice applicable to workers of F.H. Stoltze Land and Lumber Company, Stoltze Aspen Mills Division, Siguird, Utah was signed on June 21, 2002 and will soon be published in the **Federal Register**.

Pursuant to 29 CFR 90.18(c) reconsideration may be granted under the following circumstances:

(1) If it appears on the basis of facts not previously considered that the determination complained of was erroneous;

(2) If it appears that the determination complained of was based on a mistake in the determination of facts not previously considered; or

(3) If in the opinion of the Certifying Officer, a mis-interpretation of facts or of the law justified reconsideration of the decision.

The NAFTA–TAA petition, filed on behalf of workers at F.H. Stoltze Land and Lumber Company, Stoltze Aspen Mills Division, Siguird, Utah was denied because criteria (3) and (4) of the group eligibility requirements in paragraph (a)(1) of Section 250 of the Trade Act, as amended, were not met. The ''contributed importantly'' test is generally demonstrated through a survey of the workers' firm's customers. The survey revealed that none of the respondents increased their imports from Canada or Mexico of products like or directly competitive with what the subject plant produced during the relevant period. The subject firm did not import from Canada or Mexico products like or directly competitive with what the subject plant produced, nor was the subject plant's production shifted from the workers' firm to Mexico or Canada. The workers were primarily engaged in activities related to the production of landscape timber.

The petitioner appears to be alleging that the subject firm's customers switched purchases from the subject firm in favor of buying from other domestic competitors that had an apparent competitive edge, since the competitors could purchase landscape timber directly from Canada at a lower price than the subject plant could produce landscape timber.

The Department, as already indicated, examines the impact of imports from Canada and Mexico by a survey of the subject firm's major declining customers to examine if the ''contributed importantly'' test is met. The survey conducted during the initial investigation revealed that none of the respondents increased their imports of landscape timbers from Canada or Mexico, while decreasing their purchases from the subject firm during the relevant period.

The survey also examines if the products purchased by the customers from other domestic sources were imported from Canada or Mexico. The survey revealed that none of the customers reported purchasing imported landscape timbers from other domestic sources.

Conclusion

After review of the application and investigative findings, I conclude that there has been no error or misinterpretation of the law or of the facts which would justify reconsideration of the Department of Labor's prior decisions. Accordingly, the application is denied.

Signed at Washington, DC, this 25th day of July 2002.

Edward A. Tomchick,

Director, Division of Trade Adjustment Assistance.

[FR Doc. 02–19971 Filed 8–6–02; 8:45 am]

BILLING CODE 4510–30–P

DEPARTMENT OF LABOR

Employment and Training Administration

[NAFTA–05319, and NAFTA–05319A]

Motorola, Inc., Personal Communications Sector, Wireless Messaging Division, Including Leased Workers of Adecco Employment, Boynton Beach, FL and Motorola, Inc., Personal Communications Sector, Wireless Messaging Division, Buda, TX; Amended Certification Regarding Eligibility To Apply for NAFTA–Transitional Adjustment Assistance

In accordance with Section 250(a), Subchapter D, Chapter 2, Title II, of the Trade Act of 1974, as amended (19 U.S.C. 2273), the Department of Labor

issued a Certification of Eligibility to Apply for NAFTA Transitional Adjustment Assistance on February 11, 2002, applicable to workers of Motorola, Inc., Personal Communications Sector, Wireless Messaging Division, Boynton Beach, Florida. The notice was published in the **Federal Register** on February 28, 2002 (67 FR 9328). The certification was amended on April 9, 2002 to include leased workers of Adecco Employment employed at Motorola, Inc., Personal Communication Sector, Wireless Messaging Division, Boynton Beach, Florida. The notice was published in the **Federal Register** on April 24, 2002 (67 FR 20173).

At the request of the State agency, the Department reviewed the certification for workers of the subject firm. Information provided by the State shows that a worker separation occurred involving an employee whose wages were paid by Motorola, Inc., Personal Communications Sector, Wireless Messaging Div., Boynton Beach, Florida, but worked in Buda, Texas. This employee was engaged in employment related to the production of electronic paging and cellular products at the Boynton Beach, Florida location of the subject firm.

Based on these findings, the Department is amending the certification to include an employee of Motorola, Inc., Personal Communications Sector, Wireless Messaging Division, Buda, Texas.

The intent of the Department's certification is to include all workers of Motorola, Inc., Personal Communications Sector, Wireless Messaging affected by employment declines and a shift in the production of electronic paging and cellular products to Mexico.

The amended notice applicable to NAFTA–05319 is hereby issued as follows:

All workers of Motorola, Inc., Personal Communications Sector, Wireless Messaging Division, Boynton Beach, Florida including leased workers of Adecco Employment, Boca Raton, Florida (NAFTA–5319), and including a worker of Motorola, Inc., Personal Communications Sector, Wireless Messaging Division, Buda, Texas (NAFTA–5319A), engaged in employment related to the production of electronic paging and cellular products at Motorola, Inc., Personal Communications Sector, Wireless Messaging Division, Boynton Beach, Florida who became totally or partially separated from employment on or after September 13, 2000, through February 11, 2004, are eligible to apply for NAFTA–TAA under Section 250 of the Trade Act of 1974.

Signed in Washington, DC this 25th day of July, 2002.

Edward A. Tomchick,

Director, Division of Trade Adjustment Assistance.

[FR Doc. 02–19958 Filed 8–6–02; 8:45 am]

BILLING CODE 4510–30–P

DEPARTMENT OF LABOR

Employment and Training Administration

[NAFTA–05503]

Telair International Air Cargo Equipment, Rancho Domingez, California; Amended Certification Regarding Eligibility To Apply for NAFTA-Transitional Adjustment Assistance

In accordance with Section 250(A), Subchapter D, Chapter 2, Title II, of the Trade Act of 1974 (19 U.S.C. 2273), the Department of Labor issued a Certification for NAFTA Transitional Adjustment Assistance on April 3, 2002, applicable to workers of Telair International, Rancho Domingez, California. The notice was published in the **Federal Register** on April 17, 2002 (67 FR 18924).

At the request of the State agency, the Department reviewed the certification for workers of the subject firm. The workers are engaged in the production of air cargo containers and hardware. New information shows that Air Cargo Equipment purchased Telair International in May, 2001.

Information also shows that workers separated from employment at the subject firm had their wages reported under a separate unemployment insurance (UI) tax account for Air Cargo Equipment.

Accordingly, the Department is amending the certification to properly reflect this matter.

The intent of the Department's certification is to include all workers of Telair International, Rancho Domingez, California who were adversely affected by a shift of production of air cargo containers and hardware to Mexico.

The amended notice applicable to NAFTA–05503 is hereby issued as follows:

All workers of Telair International, Air Cargo Equipment, Rancho Domingez, California, who became totally or partially separated from employment on or after October 25, 2000, through April 3, 2004, are eligible to apply for NAFTA–TAA under Section 250 of the Trade Act of 1974.

Signed at Washington, DC this 25th day of July, 2002.

Edward A. Tomchick,

Director, Division of Trade Adjustment Assistance.

[FR Doc. 02–19959 Filed 8–6–02; 8:45 am]

BILLING CODE 4510–30–P

DEPARTMENT OF LABOR

Employment and Training Administration

Investigations Regarding Certifications of Eligibility To Apply for NAFTA Transitional Adjustment Assistance

Petitions for transitional adjustment assistance under the North American Free Trade Agreement-Transitional Adjustment Assistance Implementation Act (Pub. L. 103–182), hereinafter called (NAFTA–TAA), have been filed with State Governors under Section 250(b)(1) of Subchapter D, Chapter 2, Title II, of the Trade Act of 1974, as amended, are identified in the Appendix to this Notice. Upon notice from a Governor that a NAFTA–TAA petition has been received, the Director of the Division of Trade Adjustment Assistance (DTAA), Employment and Training Administration (ETA), Department of Labor (DOL), announces the filing of the petition and takes action pursuant to paragraphs (c) and (e) of Section 250 of the Trade Act.

The purpose of the Governor's actions and the Labor Department's investigations are to determine whether the workers separated from employment on or after December 8, 1993 (date of enactment of Public Law 103–182) are eligible to apply for NAFTA–TAA under Subchapter D of the Trade Act because of increased imports from or the shift in production to Mexico or Canada.

The petitioners or any other persons showing a substantial interest in the subject matter of the investigations may request a public hearing with the Director of DTAA at the U.S. Department of Labor (DOL) in Washington, DC provided such request if filed in writing with the Director of DTAA not later than August 19, 2002.

Also, interested persons are invited to submit written comments regarding the subject matter of the petitions to the

Director of DTAA at the address shown below not later than August 19, 2002.

Petitions filed with the Governors are available for inspection at the Office of the Director, DTAA, ETA, DOL, Room C–5311, 200 Constitution Avenue, NW., Washington, DC 20210.

Signed at Washington, DC this 30th day of July 2002.

Edward A. Tomchick,

Director, Division of Trade Adjustment Assistance.

Appendix

Subject firm	Location	Date received at Governor's office	Petition No.	Articles produced
Trinity Rail Group (Wrks)	Beaumont, TX	06/12/2002	NAFTA–6,272	Railcars.
Franklin Polo (Wrks)	Franklin, GA	06/10/2002	NAFTA–6,273	Men's polo shirts.
Meyersdale Manufacturing Co (Wrks)	Meyersdale, PA	06/11/2002	NAFTA–6,274	Uniform shirts.
Scotty's Fashions of Lewistown (UNITE).	Lewistown, PA	06/11/2002	NAFTA–6,275	Ladies' Sportswear.
Solectron of Oregon (Wrks)	Hillsboro, OR	06/07/2002	NAFTA–6,276	Auto electronics safety components.
St. Vincent de Paul Enterprises (Comp).	Portland, OR	06/06/2002	NAFTA–6,277	Hoods stays, brake harnesses.
Sony Electronics, Inc. (Wrks)	San Diego, CA	05/17/2002	NAFTA–6,278	Televisions and computer monitors.
Lexstar Technologies (Wrks)	Mason City, IA	05/22/2002	NAFTA–6,279	Battery packs, chargers, analyzers.
Intermix Distributors, Inc. (Wrks)	El Paso, TX	06/12/2002	NAFTA–6,280	Corn and flour tortillas.
Agrilink Foods (Comp)	Tacoma, WA	06/14/2002	NAFTA–6,281	Salsa, relish and other pickle products.
Glen Oaks Industries, Inc. (Wrks)	Dallas, TX	06/14/2002	NAFTA–6,282	Men's dress slacks.
Alfa Laval (IAM)	Kenosha, WI	05/14/2002	NAFTA–6,283	Pumps, valves and clamps.
Severn Trent Services	Fieldale, VA	06/24/2002	NAFTA–6,284	Dye for sewer plant.
NW Swissmatic ( )	Minneapolis, MN	06/06/2002	NAFTA–6,285	Cylindrical machine parts.
Joy Mining Machinery ( )	Mt. Vernon, IL	06/24/2002	NAFTA–6,286	Boilermakers.
Olson Technologies, Inc. ( )	Allentown, PA	06/17/2002	NAFTA–6,287	Valves.
Regal Plastics Company ( )	Roseville, MI	06/20/2002	NAFTA–6,288	Plastics.
Tecknit ( )	Cranford, NJ	05/10/2002	NAFTA–6,289	Gaskets.
Therm-O-Disc Inc. ( )	Muskegon, MI	06/20/2002	NAFTA–6,290	Saturn Probe assemblies (part numbers).
Sulzer Pumps ( )	Portland, OR	06/20/2002	NAFTA–6,291	Industrial pumps.
Weyerhaeuser ( )	Woodburn, OR	06/20/2002	NAFTA–6,292	Finished wood products.
Micro Molding Technologies ( )	Boynton Beach, FL	06/20/2002	NAFTA–6,293	Inection molding of plastic parts.
Curt G. Joa, Inc. ( )	Boynton Beach, FL	06/19/2002	NAFTA–6,294	Custom web processing machinery.
Sun Belt Interplex ( )	Tamarac, FL	04/22/2002	NAFTA–6,295	Metal stampings for med & tech. industrs.
Great Lakes Transportation ( )	Duluth, MN	06/25/2002	NAFTA–6,296	
American Corporation ( )	Carrollton, GA	06/19/2002	NAFTA–6,297	Women's white socks.
Angelica Image Apparel ( )	St. Louis, MO	06/21/2002	NAFTA–6,298	Uniforms (shirts and aprons).
EDUSA Corp. (Wkrs)	El Paso, TX	06/20/2002	NAFTA–6,299	Warehousing.
Strattec Security (Co)	Milwaukee, WI	06/20/2002	NAFTA–6,300	Locks.
BR Holdings LTD—Racine Steel Castings (CO).	Racine, WI	06/19/2002	NAFTA–6,301	Automobile seats.
Flextronics—Enclosure Systems (CO)	New Braunfels, TX	06/24/2002	NAFTA–6,302	Plastics and sheet metal fabrication.
Parker Hosiery (CO)	Old Fort, NC	06/25/2002	NAFTA–6,303	Socks.
Ericsson (CO)	Durham, NC	06/20/2002	NAFTA–6,304	Indoor/outdoor base stations products.
Montgomery Production (CO)	Montgomery, IL	06/26/2002	NAFTA–6,305	Retail grocery and foodservice products.
Signa Molds (Wkrs)	Pacoima, CA	06/24/2002	NAFTA–6,306	Injection molds.
Vishay Dale Electronics (Co.)	Columbus, NE	06/28/2002	NAFTA–6,307	Wirewound-military mount.
Santiom Forest Products (CO)	Sweet Home, OR	06/28/2002	NAFTA–6,308	Ran threw planer & molder.
Brooks-PRI Automation (Co.)	Hillsboro, OR	06/26/2002	NAFTA–6,309	Software design, development, and mgmt.
JB Tool & Machine (Wkrs)	Wapakoneta, OH	06/28/2002	NAFTA–6,310	TV frames.
Premier Turbines (CO)	Neosho, MO	06/26/2002	NAFTA–6,311	Military engines.
Delphi Corporation (CO)	Dayton, OH	05/14/2002	NAFTA–6,312	Brake and chase systems.
H and L Tool Company	Erie, PA	06/21/2002	NAFTA–6,313	Plastic injection molds.
Newcor Inc. (Wkrs)	Troy, MI	06/27/2002	NAFTA–6,314	Oil pump transmission shaft.
Paccar Kenworth (IAM)	Bentown, MA	04/23/2002	NAFTA–6,315	Fabricated parted.
Andrew Corporation (Wkrs)	Camarillo, CA	06/24/2002	NAFTA–6,316	Wireless antennas.
General Cable (CO)	Bonham, TX	06/27/2002	NAFTA–6,317	Copper telephone cable.
Ube Automotive North America (UAW)	Mason, OH	06/24/2002	NAFTA–6,318	Aluminum wheels.
General Cable (Wkrs)	Monticello, IL	06/26/2002	NAFTA–6,319	Telephone wire.
MSC Pinole Point Steel (Wkrs)	Richmond, CA	06/21/2002	NAFTA–6,320	Coils.
Xerox Corporation (Wkrs)	Webster, NY	06/17/2002	NAFTA–6,321	Lakes products.
Whisper Jet (Wrkrs)	Sanford, FL	06/20/2002	NAFTA–6,322	Helicopter.
Metso Automation (Co.)	Shrewbury, MA	06/26/2002	NAFTA–6,323	Control valves.
Neuroscan (Wkrs)	El Paso, TX	06/26/2002	NAFTA–6,324	Medical electronic equipment.
Metso Minerals (Co.)	Clintonville, WI	06/26/2002	NAFTA–6,325	Conveyers.

Subject firm	Location	Date received at Governor's office	Petition No.	Articles produced
Schneider Electric/Square D Company (Wrkrs).	Monroe, NC	06/25/2002	NAFTA–6,326	Low Voltage Transformers.
A.O. Smith Electrical Products (Co.)	Monticello, IN	06/26/2002	NAFTA–6,327	Subfractional motor.
A.O. Smith Electrical Products (CO)	Upper Sandusky, OH	04/17/2002	NAFTA–6,328	Electric motor stampings.
Tyco International (Wkrs)	White City, OR	05/30/2002	NAFTA–6,329	Printed circuits boards.
Johnson Controls (Co.)	Lapier, MI	06/21/2002	NAFTA–6,330	Headliners.
Permeir Turbines, Sabareliner (Wkrs)	Independence, KS	07/02/2002	NAFTA–6,331	Aircraft Products.
Trus Joist a Weyerhauser Business (Co).	Stayton, OR	07/02/2002	NAFTA–6,332	Engineered Wood Products.
King Press (Wkrs)	Joplin, MO	07/04/2002	NAFTA–6,333	Complete Printing Process.
Nortel Networks (Wkrs)	Billerica, MA	07/02/2002	NAFTA–6,334	BSN 5000/Broadband Service Node.
Fibermark (Wkrs)	South Hadley, MA	07/02/2002	NAFTA–6,335	Pulp and Specialty Paper.
Snorkel (Wkrs)	Elwood, KS	06/27/2002	NAFTA–6,336	Forklifts.
Trico Products Inc. (Wkrs)	Buffalo, NY	07/02/2002	NAFTA–6,337	IT Information Services.
Accura Tool and Die-Metaldyne (Wkrs).	Crystalake, IL	07/05/2002	NAFTA–6,338	Tools.
Maxxim Medical Inc. (Wkrs)	Asheville, NC	07/03/2002	NAFTA–6,339	Medical Surgical Drapes and Gowns.
Solectron (Wkrs)	West Palm Beach, FL	07/05/2002	NAFTA–6,340	Metal stamping, injection molding, etc.
Flextronics International (Wkrs)	Longmont, CO	06/24/2002	NAFTA–6,341	Contract Assembly Box Build.
Louisiana Pacific (Co.)	Bon Wier, TX	07/09/2002	NAFTA–6,342	Plywood panels.
Doutt Tool Inc. (Co.)	Venago, PA	07/03/2002	NAFTA–6,343	Punches, Dies, Machine Parts.
Wisconsin Color Press (Co.)	Milwaukee, WI	07/02/2002	NAFTA–6,344	Magazines, Catalogs & printing products.
News Group (The) (Wkrs)	Jackson, MI	07/03/2002	NAFTA–6,345	Magazine and book distributor.
National Textiles (Wkrs)	Winston Salem, NC	07/08/2002	NAFTA–6,346	Fabric.
Midwest Metallurgical-Detroit Stoker (GMP).	Mashall, MI	07/08/2002	NAFTA–6,347	New casting.
Feralloy North American Steel (Wkrs)	Melvindale, MI	07/08/2002	NAFTA–6,348	Steel.
John Deer Vehicle Group (Wkrs)	Williamsburg, VA	07/08/2002	NAFTA–6,349	Utility vehicles.
Medtronic (Co.)	Sunnse, FL	06/18/2002	NAFTA–6,350	Medical device.
FCI USA (Wkrs)	York, PA	07/08/2002	NAFTA–6,351	Connectors.

[FR Doc. 02–19963 Filed 8–6–02; 8:45 am]

BILLING CODE 4510–30–P

DEPARTMENT OF LABOR

Mine Safety and Health Administration

Petitions for Modification

The following party has filed a petition to modify the application of an existing safety standard under section 101(c) of the Federal Mine Safety and Health Act of 1977.

1. Mountain Coal Company, LLC

[Docket No. M–2002–061–C]

Mountain Coal Company, LLC, 5174 Highway 133, P.O. Box 591, Somerset, Colorado 81434 has filed a petition to modify the application of 30 CFR 75.321(a)(2) (Air quality) to its West Elk Mine (I.D. No. 05–03672) located in Gunnison County, Colorado. The petitioner requests a modification of the standard to allow personnel to work in bleeder entries where the air quality contains a minimum of 18.0% oxygen. The petitioner states that the stipulations listed below, along with others listed in the petition, would be followed when its proposed alternative method is implemented: (a) Work in bleeder entries would be limited to what is necessary to complete required weekly examinations and maintain the bleeder in travelable condition such as pumping water, repairing water pumping system, installing additional supplemental roof support, calibrating sensors, etc.; (b) Oxygen sensors would be installed to continuously monitor the oxygen content every 4000 feet in the bleeder entry where the oxygen content is less than 19.5%; and (c) Training would be provided to all personnel assigned to work in the bleeder entries in the hazards of oxygen deficiency and the stipulations of this petition. The petitioner states that the reduced oxygen content in the bleeder entry would not affect the purpose of the bleeder entry for methane control. The petitioner asserts that the proposed alternative method would provide at least the same measure of protection as the existing standard, and that application of the existing standard would result in a diminution of safety to the miners.

Request for Comments

Persons interested in these petitions are encouraged to submit comments via e-mail to ''comments@msha.gov,'' or on a computer disk along with an original hard copy to the Office of Standards, Regulations, and Variances, Mine Safety and Health Administration, 1100 Wilson Boulevard, Room 2352, Arlington, Virginia 22209–3939. All comments must be postmarked or received in that office on or before September 6, 2002. Copies of these petitions are available for inspection at that address.

Dated at Arlington, Virginia this 1st day of August, 2002.

Marvin W. Nichols, Jr.,

Director, Office of Standards, Regulations, and Variances.

[FR Doc. 02–19914 Filed 8–6–02; 8:45 am]

BILLING CODE 4510–43–P

OFFICE OF PERSONNEL MANAGEMENT

Proposed Collection; Comment Request for Review of a Revised Information Collection: RI 98–7

AGENCY: Office of Personnel Management.

ACTION: Notice.

SUMMARY: In accordance with the Paperwork Reduction Act of 1995 (Pub. L. 104–13, May 22, 1995, and 5 CFR part

1320), this notice announces that the Office of Personnel Management (OPM) intends to submit to the Office of Management and Budget (OMB) a request for review of a revised information collection. RI 98–7, We Need Important Information About Your Eligibility for Social Security Disability Benefits, is used by OPM to verify receipt of Social Security Administration (SSA) disability benefits, to lessen or avoid overpayments to FERS disability retirees. It notifies the annuitant of the responsibility to notify OPM if SSA benefits begin and the overpayment that will occur with the receipt of both benefits.

Comments are particularly invited on:

—Whether this collection of information is necessary for the proper performance of functions of the Office of Personnel Management, and whether it will have practical utility;

—Whether our estimate of the public burden of this collection is accurate, and based on valid assumptions and methodology; and

—Ways in which we can minimize the burden of the collection of information on those who are to respond, through use of the appropriate technological collection techniques or other forms of information technology.

Approximately 5,500 RI 98–7 forms will be completed annually. We estimate it takes approximately 5 minutes to complete the form. The annual burden is 458 hours.

For copies of this proposal, contact Mary Beth Smith-Toomey on (202) 606–8358, FAX (202) 418–3251 or e-mail to *mbtoomey@opm.gov.* Please include your mailing address with your request.

DATES: Comments on this proposal should be received within 60 calendar days from the date of this publication.

ADDRESSES: Send or deliver comments to Lawrence P. Holman, Acting Chief, FERS Division, Retirement and Insurance Service, U.S. Office of Personnel Management, 1900 E Street, NW., Room 3313, Washington, DC 20415–3520.

For Information Regarding Administrative Coordination—Contact: Cyrus S. Benson, Team Leader, Desktop Publishing and Printing Team, Budget and Administrative Services Division, (202) 606–0623.

U.S. Office of Personnel Management.

Kay Coles James,

Director.

[FR Doc. 02–19950 Filed 8–6–02; 8:45 am]

BILLING CODE 6325–50–P

SECURITIES AND EXCHANGE COMMISSION

[Release No. 34–46288; File No. SR–NASD–2002–85]

Self-Regulatory Organizations; Notice of Filing of Proposed Rule Change by the National Association of Securities Dealers, Inc. Relating to Issuer Disclosure of Material Information

July 31, 2002.

Pursuant to section 19(b)(1) of the Securities Exchange Act of 1934 (''Act''),[1] and Rule 19b–4 thereunder,[2] notice is hereby given that on June 26, 2002, the National Association of Securities Dealers, Inc. (''NASD''), through its subsidiary, The Nasdaq Stock Market, Inc. (''Nasdaq''), filed with the Securities and Exchange Commission (''Commission'') the proposed rule change as described in Items I, II, and III below, which Items have been prepared by Nasdaq. The Commission is publishing this notice to solicit comments on the proposed rule change from interested persons.

I. Self-Regulatory Organization's Statement of the Terms of Substance of the Proposed Rule Change

Nasdaq proposes to modify its rules pertaining to issuer disclosure of material information. The text of the proposed rule change is below. Proposed additions are in italics; proposed deletions are in brackets.

4120. Trading Halts

(a) No change.

(b) Procedure for Initiating a Trading Halt

(1) Nasdaq issuers are required to notify Nasdaq of the release of [any] *certain* material news prior to the release of such information to the [press] *public* as required by Rule*s* 4310(c)(16) and 4320(e)(14).

(2) Notification shall be provided directly to Nasdaq's MarketWatch Department by telephone, facsimile, or other compatible means of electronic communication.* Information communicated orally by authorized representatives of a Nasdaq issuer should be confirmed promptly in writing.

*Notification may be provided to the MarketWatch Department by telephone 1–800–537–3929 and (240) 386–6046. Between 7 p.m. and [8] *7:30 a.m.* Eastern Time, voice mail messages may be left on either number. The fax number is (240) 386–604[6]*7.*

(3)—(6) No change

IM–4120–1. Disclosure of Material Information

Rules 4310(c)(16) and 4320(e)(14) require that, except in unusual circumstances, Nasdaq issuers disclose promptly to the public through [the news media] *any Regulation FD compliant method (or combination of methods) of disclosure* any material information which would reasonably be expected to affect the value of their securities or influence investors' decisions. [and that] Nasdaq issuers *shall* notify Nasdaq of the release of [any] such *material* information *that involves any of the events set forth below* prior to its release to the public [through the news media]. Nasdaq recommends that Nasdaq issuers provide such notification at least ten minutes before such release.** Under unusual circumstances issuers may not be required to make public disclosure of material events; for example, where it is possible to maintain confidentiality of those events and immediate public disclosure would prejudice the ability of the company to pursue its corporate objectives. However, Nasdaq issuers remain obligated to disclose this information to Nasdaq upon request pursuant to Rules 4310(c)(15) or 4320(e)(13).

Whenever unusual market activity takes place in a Nasdaq issuer's securities, the issuer normally should determine whether there is material information or news that should be disclosed. If rumors or unusual market activity indicate that information on impending developments has become known to the investing public, or if information from a source other than the issuer becomes known to the investing public, a clear public announcement may be required as to the state of negotiations or development of issuer plans. Such an announcement may be required, even though the issuer may not have previously been advised of such information or the matter has not yet been presented to the issuer's Board of Directors for consideration. It may also be appropriate, in certain circumstances, to publicly deny false or inaccurate rumors which are likely to have, or have had, an effect on the trading in its securities or would likely have an influence on investment decisions.

Trading Halts

A trading halt benefits current and potential shareholders by halting all trading in any Nasdaq securities until there has been an opportunity for the information to be disseminated to the public. This decreases the possibility of

[1] 15 U.S.C. 78s(b)(1).

[2] 17 CFR 240.19b–4.

some investors acting on information known to them but which is not known to others. A trading halt provides the public with an opportunity to evaluate the information and consider it in making investment decisions. It also alerts the marketplace to the fact that news has been released.

Nasdaq's MarketWatch Department monitors real time trading in all Nasdaq securities during the trading day for price and volume activity. In the event of certain price and volume movements, the MarketWatch Department may contact an issuer and its market makers in order to ascertain the cause of the unusual market activity. The MarketWatch Department treats the information provided by the issuer and other sources in a highly confidential manner, and uses it to assess market activity and assist in maintaining fair and orderly markets. A Nasdaq listing includes an obligation to disclose to the MarketWatch Department information that the issuer is not otherwise disclosing to the investing public or the financial community. On occasion, changes in market activity prior to the issuer's release of material information may indicate that the information has become known to the investing public. Changes in market activity also may occur when there is a release of material information by a source other than the issuer, such as when a Nasdaq issuer is subject to an unsolicited take-over bid by another company. Depending on the nature of the event and the issuer's views regarding the business advisability of disclosing the information, the MarketWatch Department may work with the issuer to accomplish a timely release of the information. Furthermore, depending on the materiality of the information and the anticipated affect of the information on the price of the issuer's securities, the MarketWatch Department may advise the issuer that a temporary trading halt is appropriate to allow for full dissemination of the information and to maintain an orderly market. The institution of a temporary trading halt pending the release of information is not a reflection on the value of the securities halted. Such trading halts are instituted, among other reasons, to insure that material information is fairly and adequately disseminated to the investing public and the marketplace, and to private investors with the opportunity to evaluate the information in making investment decisions. A trading halt normally lasts one half hour but may last longer if a determination is made that news has not been adequately disseminated or that the original or an additional basis under Rule 4120 exists for continuing the trading halt.

The MarketWatch Department is required to keep non-public information confidential and to use such information only for regulatory purposes.

[Material information which would reasonably be expected to affect the value of the securities of an issuer or influence investors' decisions would include information regarding issuer events of an unusual and/or nonrecurrent nature.] *Issuers are required to notify the MarketWatch Department of the release of material information included in the following list of events prior to the release of such information to the public.* [The following list of events, while not an exhaustive summary of all situations in which disclosure to Nasdaq should be considered, may be helpful in determining whether information is material.] It should also be noted that every development that might be reported to Nasdaq in these areas would not necessarily be deemed to warrant a trading halt. *In addition to the following list of events, Nasdaq encourages issuers to avail themselves of the opportunity for advance notification to the MarketWatch Department in situations where they believe, based upon their knowledge of the significance of the information, that a temporary trading halt may be necessary or appropriate.*

[• a merger, acquisition or joint venture;

• a stock split or stock dividend;

• earnings and dividends of an unusual nature;

• the acquisition or loss of a significant contract;

• a significant new product or discovery;

• a change in control or a significant change in management;

• a call of securities for redemption;

• the public or private sale of a significant amount of additional securities;

• the purchase or sale of a significant asset;

• a significant labor dispute;

• establishment of a program to make purchases of the issuer's own shares;

• a tender offer for another issuer's securities; and

• an event requiring the filing of a current report under the Act.]

(a) Financial-related disclosures, including quarterly or yearly earnings, earnings restatements, pre-announcements or ''guidance.''

(b) Corporate reorganizations and acquisitions, including mergers, tender offers, asset transactions and bankruptcies or receiverships.

(c) New products or discoveries, or developments regarding customers or suppliers (e.g., significant developments in clinical or customer trials, and receipt or cancellation of a material contract or order).

(d) Senior management changes of a material nature or a change in control.

(e) Resignation or termination of independent auditors, or withdrawal of a previously issued audit report.

(f) Events regarding the issuer's securities—e.g., defaults on senior securities, calls of securities for redemption, repurchase plans, stock splits or changes in dividends, changes to the rights of security holders, or public or private sales of additional securities.

(g) Significant legal or regulatory developments.

(h) Any event requiring the filing of a Form 8–K.

Use of Regulation FD Compliant Methods in the Disclosure of Material Information

Regardless of the method of disclosure that an issuer chooses to utilize, issuers are required to notify the MarketWatch Department of the release of material information that involves any of the events set forth above prior to its release to the public. Nasdaq recommends that issuers provide such notification at least ten minutes before such release. When an issuer chooses to utilize a Regulation FD compliant method for disclosure other than a press release or Form 8–K, the issuer will be required to provide prior notice to the MarketWatch Department of: (1) the press release announcing the logistics of the future disclosure event; and (2) a descriptive summary of the material information to be announced during the disclosure event if the press release does not contain such a summary.

Depending on the materiality of the information and the anticipated effect of the information on the price of the issuer's securities, the MarketWatch Department may advise the issuer that a temporary trading halt is appropriate to allow for full dissemination of the information and to maintain an orderly market. The MarketWatch Department will assess with issuers utilizing methods of disclosure other than a press release or Form 8–K the timing within the disclosure event when the issuer will cover the material information so that the halt can be commenced accordingly. Issuers will be responsible for promptly alerting the MarketWatch Department of any significant changes to the previously outlined disclosure timeline. Issuers are reminded that the posting of information on its own website is not by

itself considered a sufficient method of public disclosure under Regulation FD, and as a result, under Nasdaq rules.

[Use of the Internet in the Disclosure of Material Information

While Nasdaq requires that its listed issuers disseminate material press releases over one of the major news wires, Nasdaq recognizes the increased utilization of the Internet as a vehicle for additional news dissemination. The Internet is a valuable disclosure resource that can enhance the orderly dissemination of material information for all shareholders and market participants.

Issuers can and should provide shareholders direct access to corporate disclosures via their Internet home pages and web sites.

To ensure a level playing field for all investors in Nasdaq companies, however, this policy on disclosure of corporate information requires that the use of the Internet to disseminate material press releases is appropriate provided the information is not made available over the Internet before the same information is transmitted to, and received by, the traditional news vendor services. Issuers must still notify Nasdaq at least ten minutes prior to the release of any information that would reasonably be expected to affect the value of securities or influence investors' decisions, as indicated in this policy.]

**Notification may be provided to the MarketWatch Department by telephone 1–800–537–3929 and (240) 386–6046. Between 7 p.m. and [8] *7:30* a.m. Eastern Time, voice mail messages may be left on either number. Information communicated orally should be confirmed promptly in writing. The fax number is (240) 386–604[6]*7*.

4310. Qualification Requirements for Domestic and Canadian Securities

To qualify for inclusion in Nasdaq, a security of a domestic or Canadian issuer shall satisfy all applicable requirements contained in paragraphs (a) or (b), and (c) hereof.

(a)–(b) No change.

(c) In addition to the requirements contained in paragraph (a) or (b) above, and unless otherwise indicated, a security shall satisfy the following criteria for inclusion in Nasdaq:

(1)–(15) No change.

(16) Except in unusual circumstances, the issuer shall make prompt disclosure to the public through [the news media] *any Regulation FD compliant method (or combination of methods) of disclosure* of any material information that would reasonably be expected to affect the value of its securities or influence investors' decisions [and shall]. *The issuer shall*, prior to the release of the information, provide notice of such disclosure to Nasdaq's MarketWatch Department *if the information involves any of the events set forth in IM–4120–1.**

* [This notice shall be made to Nasdaq's MarketWatch Department at 9509 Key West Avenue, Rockville, Maryland 20850–3351. The telephone numbers are] *Notification may be provided to the MarketWatch Department by telephone* 1–800–537–3929 and (240) 386–6046. Between 7 p.m. and [8] *7:30* a.m. Eastern Time, voice mail messages may be left on either number. The fax number is (240) 386–6047.

(17)–(29) No change.

(d) No change.

4320. Qualification Requirements for Non-Canadian Foreign Securities and American Depositary Receipts

To qualify for inclusion in Nasdaq, a security of a non-Canadian foreign issuer, an American Depositary Receipt (ADR) or similar security issued in respect of a security of a foreign issuer shall satisfy the requirements of paragraphs (a), (b) or (c), and (d) and (e) of this Rule.

(a)–(d) No change.

(e) In addition to the requirements contained in paragraphs (a), (b) or (c), and (d), the security shall satisfy the following criteria for inclusion in Nasdaq:

(1)–(13) No change.

(14) Except in unusual circumstances, the issuer shall make prompt disclosure to the public in the United States through [international wire services or similar disclosure media] *any Regulation FD compliant method (or combination of methods)* of disclosure of any material information that would reasonably be expected to affect the value of its securities or influence investors' decisions [and shall]. *The issuer shall*, prior to the release of the information, provide notice of such disclosure to Nasdaq *if the information involves any of the events set forth in IM–4120–1.**

*[This notice shall be made to Nasdaq's MarketWatch Department at 9509 Key West Avenue, Rockville, Maryland 20850–3351. The telephone numbers are] *Notification may be provided to the MarketWatch Department by telephone* 1–800–537–3929 and (240) 386–6046. Between 7 p.m. and [8] *7:30* a.m. Eastern Time, voice mail messages may be left on either number. The fax number is (240) 386–6047.

(15)–(25) No change.

(f) No change.

* * * * *

II. Self-Regulatory Organization's Statement of the Purpose of, and Statutory Basis for, the Proposed Rule Change

In its filing with the Commission, Nasdaq included statements concerning the purpose of and basis for the proposed rule change and discussed any comments it received on the proposed rule change. The text of these statements may be examined at the places specified in Item IV below. Nasdaq has prepared summaries, set forth in Sections A, B, and C below, of the most significant aspects of such statements.

A. Self-Regulatory Organization's Statement of the Purpose of, and Statutory Basis for, the Proposed Rule Change

1. Purpose

Regulation Fair Disclosure (''Regulation FD'' or ''Reg FD'') was adopted by the SEC in order to curb the selective disclosure of material non-public information by issuers to analysts and institutional investors. Generally, Regulation FD requires that when an issuer discloses material information, it do so publicly. Public disclosure under Reg FD can be accomplished by filing a Form 8–K with the SEC or through another method of disclosure that is reasonably designed to provide broad, non-exclusionary distribution of the information to the public.

Nasdaq has determined to harmonize its rules pertaining to issuer disclosure of material information with Reg FD by allowing issuers to disseminate material information via the same means permitted under Reg FD. Nasdaq also proposes to revise the list of material events set forth in IM–4120–1 and require issuers to provide prior notification to the MarketWatch Department only for information that involves any of the material events set forth in this list.

Disclosure of Material Information. Currently, Nasdaq rules require that, except in unusual circumstances, Nasdaq listed companies promptly disclose to the public through the news media any material information which would reasonably be expected to affect the value of their securities or influence investors' decisions.[3] This disclosure must be made via a press release that is distributed through news services such as Dow Jones, Reuters, Bloomberg, Business Wire or PR Newswire. In order

[3] *See* IM–4120–1.

to provide issuers with the flexibility afforded under Regulation FD, Nasdaq proposes to modify its rules in order to recognize all Reg FD compliant disclosure methods as a means for issuer compliance with Nasdaq disclosure obligations. In addition to a broadly disseminated press release, Reg FD compliant methods of disclosure include furnishing to or filing with the SEC a Form 8–K as well as conference calls, press conferences and webcasts, so long as the public is provided adequate notice (generally by press release) and granted access.[4]

By aligning Nasdaq disclosure options with those outlined in Reg FD, Nasdaq will enable issuers to recognize the benefits of utilizing current technologies as part of a comprehensive issuer disclosure strategy. In addition, issuer confusion between Reg FD compliant and Nasdaq compliant disclosure plans will be minimized. Lastly, allowing Nasdaq issuers to use Regulation FD compliant methods of disclosure will address the concerns that have been raised regarding self-regulatory organization rules overriding the flexibility provided by Reg FD.[5]

Irrespective of the method of disclosure, issuers will be required to provide prior notification of certain planned material news announcements to the MarketWatch Department prior to their release to the public.[6] Issuers using a press release or Form 8–K must notify MarketWatch by faxing the press release or Form 8–K, or providing the material information by phone prior to public dissemination.[7] When using a conference call, press conference or Web cast as the primary means for disclosure, issuers will be required to provide prior notice to MarketWatch of:

—The press release announcing the future conference call, press conference or Web cast; and

—A descriptive summary of the material elements to be announced in the call, press conference or Web cast if the press release does not contain a summary.

MarketWatch will continue to evaluate the materiality of these disclosures and implement temporary trading halts, where appropriate, to facilitate the orderly dissemination of certain issuer announcements having a potentially material impact on the price of the securities.[8] MarketWatch will assess with issuers using press conferences, conference calls and webcasts the timing during the event where the issuer will cover the material points. For example, if an issuer plans to commence discussing the material information ten minutes into the event and expects it to take fifteen minutes to address, MarketWatch will coordinate the resumption of trading (usually thirty minutes following dissemination of the material news) based on the material news being covered twenty-five minutes after the start of the event.[9] If a press release announcing a future conference call, press conference or webcast contains details of the essential material disclosure, Nasdaq may halt trading for dissemination of this statement. In that instance, trading would not be halted again for the subsequent press conference, conference call or webcast.

MarketWatch Notification Categories. Nasdaq rules currently require issuers to notify Nasdaq of the release of any material information prior to its release to the public.[10] Prior notification allows Nasdaq's MarketWatch Department to determine whether a temporary trading halt of an issuer's securities is appropriate to allow the full dissemination of the information to the public. In order to assist issuers in determining whether information is material, IM–4120–1 currently provides a non-exhaustive list of events that may affect the value of an issuer's securities or influence investors' decisions. Nasdaq proposes to revise the list set forth in IM–4120–1 and require issuers to provide prior notification to MarketWatch only of material information that involves the events set forth in this list.

The revised list is comprised of the events that are expected to have a material impact on the price of an issuer's securities or on investors' decisions. The list was developed through the analysis of Nasdaq trading halt data and material information categories outlined in other sources, including Reg FD. In fact, the events are generally similar to those enumerated in the Regulation FD adopting release,[11] but include certain additional clarifications deemed appropriate by Nasdaq. The following is a list of the categories of material information that must be disclosed to the MarketWatch Department prior to public dissemination:

(a) Financial-related disclosures, including quarterly or yearly earnings, earnings restatements, pre-announcements or ''guidance.''

(b) Corporate reorganizations and acquisitions, including mergers, tender offers, asset transactions and bankruptcies or receiverships.

(c) New products or discoveries, or developments regarding customers or suppliers (*e.g.,* significant developments in clinical or customer trials, and receipt or cancellation of a material contract or order).

(d) Senior management changes of a material nature or a change in control.

(e) Resignation or termination of independent auditors, or withdrawal of a previously issued audit report.

(f) Events regarding the issuer's securities—*e.g.,* defaults on senior securities, calls of securities for redemption, repurchase plans, stock splits or changes in dividends, changes to the rights of security holders, or public or private sales of additional securities.

(g) Significant legal or regulatory developments.

(h) Any event requiring the filing of a Form 8–K.

The proposed rule does not relieve Nasdaq issuers of their requirement to promptly disclose to the public any material information that would reasonably be expected to affect the value of their securities or influence investors' decisions. Rather, the rule sets forth those instances in which issuers must provide prior notice to Nasdaq before the disclosure of the material information to the public. Of course, Nasdaq issuers are encouraged to provide advance notification to MarketWatch of material information that does not involve the events set forth in the above list in situations where they believe, based upon their knowledge of the significance of the information, that a temporary trading halt may be necessary or beneficial.

2. Statutory Basis

Nasdaq believes that the proposed rule change is consistent with the provisions of section 15A of the Act,[12] in general, and with section 15A(b)(6) of the Act,[13] in particular, in that it is designed to prevent fraudulent and manipulative acts and practices, and, in

[4] Securities Exchange Act Release No. 43154 (August 15, 2000), 65 FR 51716 (August 24, 2000) at 51724.

[5] *See e.g.,* Unger, *Special Study: Regulation Fair Disclosure Revisited* (December 2001).

[6] Nasdaq recommends that issuers provide such information at least 10 minutes before the release of the information to the public.

[7] Information communicated orally should be confirmed promptly in writing.

[8] Separate from this filing, Nasdaq will soon be seeking public comment on several issues related to trading halts, including a possible pilot halt-free period during the after hours trading session, the length of halts, and the procedure for resumption of trading following a halt.

[9] It will be the issuer's responsibility to promptly alert MarketWatch of any significant changes to a previously outlined disclosure timeline.

[10] *See* IM–4120–1.

[11] Securities Exchange Act Release No. 43154 (August 15, 2000), 65 FR 51716 (August 24, 2000) at 51721.

[12] 15 U.S.C. 78o–3.

[13] 15 U.S.C. 78o–3(b)(6).

general, to protect investors and the public interest. As noted above, Nasdaq believes the harmonization of Nasdaq's disclosure rules with Regulation FD will minimize issuer confusion while at the same time allowing issuers to utilize current technologies for the broad, non-exclusionary dissemination of material information to the public. In addition, Nasdaq believes the development of a list of categories of material information that must be disclosed to the MarketWatch Department prior to public dissemination will provide greater transparency for issuers while allowing Nasdaq to continue to ensure the fair and adequate dissemination of material information to the public.

B. Self-Regulatory Organization's Statement on Burden on Competition

Nasdaq does not believe that the proposed rule change will result in any burden on competition that is not necessary or appropriate in furtherance of the purposes of the Act, as amended.

C. Self-Regulatory Organization's Statement on Comments on the Proposed Rule Change Received from Members, Participants or Others

Written comments were neither solicited nor received.

III. Date of Effectiveness of the Proposed Rule Change and Timing For Commission Action

Within 35 days of the date of publication of this notice in the **Federal Register** or within such longer period (i) as the Commission may designate up to 90 days of such date if it finds such longer period to be appropriate and publishes its reasons for so finding or (ii) as to which the NASD consents, the Commission will:

A. By order approve such proposed rule change, or

B. institute proceedings to determine whether the proposed rule change should be disapproved.

IV. Solicitation of Comments

Interested persons are invited to submit written data, views and arguments concerning the foregoing, including whether the proposed rule change is consistent with the Act. Persons making written submissions should file six copies thereof with the Secretary, Securities and Exchange Commission, 450 Fifth Street, NW., Washington, DC 20549–0609. Copies of the submission, all subsequent amendments, all written statements with respect to the proposed rule change that are filed with the Commission, and all written communications relating to the proposed rule change between the Commission and any person, other than those that may be withheld from the public in accordance with the provisions of 5 U.S.C. 552, will be available for inspection and copying in the Commission's Public Reference Room. Copies of such filing will also be available for inspection and copying at the principal office of the NASD. All submissions should refer to file number SR–NASD–2002–85 and should be submitted by August 28, 2002.

For the Commission, by the Division of Market Regulation, pursuant to delegated authority.[14]

Margaret H. McFarland,

Deputy Secretary.

[FR Doc. 02–19890 Filed 8–6–02; 8:45 am]

BILLING CODE 8010–01–P

SECURITIES AND EXCHANGE COMMISSION

[Release No. 34–46289; File No. SR–NASD–2002–103]

Self-Regulatory Organizations; Notice of Filing and Immediate Effectiveness of Proposed Rule Change by the National Association of Securities Dealers, Inc. To Amend NASD Interpretive Material 8310–2 Regarding the Release of Disciplinary Information to the Public

July 31, 2002.

Pursuant to section 19(b)(1) of the Securities Exchange Act of 1934 (''Act''),[1] and Rule 19b–4 thereunder,[2] notice is hereby given that on July 31, 2002, the National Association of Securities Dealers, Inc. (''NASD'') filed with the Securities and Exchange Commission (''Commission'') the proposed rule change as described in Items I, II and III below, which Items have been prepared by the NASD. The NASD filed the proposal pursuant to section 19(b)(3)(A) of the Act,[3] and Rule 19b–4(f)(6) thereunder,[4] which renders the proposal effective upon filing with the Commission.[5] The Commission is publishing this notice to solicit comments on the proposed rule change from interested persons.

I. Self-Regulatory Organization's Statement of the Terms of Substance of the Proposed Rule Change

The NASD proposes to amend NASD Interpretive Material 8310–2 (''IM–8310–2'') to clarify the terms under which the NASD will release disciplinary information to the public. The proposed rule change will become operative on September 1, 2002. The text of the proposed rule change is below. Proposed additions are in italics; proposed deletions are in brackets.

IM–8310–2. Release of Disciplinary Information

(a) through (c) No change.

(d)(1) [The Association] *NASD* shall release to the public information with respect to any disciplinary decision issued pursuant to the Rule 9000 Series imposing a suspension, cancellation or expulsion of a member; or suspension or revocation of the registration of a person associated with a member; or suspension or barring of a member or person associated with a member from association with all members; or imposition of monetary sanctions of $10,000 or more upon a member or person associated with a member; or containing an allegation of a violation of a Designated Rule; and may also release such information with respect to any disciplinary decision or group of decisions that involve a significant policy or enforcement determination where the release of information is deemed by the President of NASD [Regulation, Inc.] *Regulatory Policy and Oversight* to be in the public interest. [The Association] *NASD* also may release to the public information with respect to any disciplinary decision issued pursuant to the Rule 8220 Series imposing a suspension or cancellation of the member or a suspension of the association of a person with a member, unless the National Adjudicatory Council determines otherwise. The National Adjudicatory Council may, in its discretion, determine to waive the requirement to release information with respect to a disciplinary decision under those extraordinary circumstances where the release of such information would violate fundamental notions of fairness or work an injustice. [The Association] *NASD* may release to the public information on any [other final, litigated,] disciplinary decision issued pursuant to the Rule 8220 Series or Rule 9000 Series, not specifically enumerated in this paragraph, regardless of sanctions imposed, so long as the names of the parties and other identifying information is redacted.

---

[14] 17 CFR 200.30–3(a)(12).

[1] 15 U.S.C. 78s(b)(1).

[2] 17 CFR 240.19b–4.

[3] 15 U.S.C. 78s(b)(3)(A).

[4] 17 CFR 240.19b–4(f)(6).

[5] The NASD provided the Commission with notice of its intent to file the proposed rule change on June 28, 2002. *See* Rule 19b–4(f)(6)(iii). 17 CFR 240.19b–4(f)(6)(iii).

(A) NASD shall release to the public, in unredacted form, information with respect to any disciplinary decision issued pursuant to the Rule 9300 Series that does not meet one or more of the criteria in IM–8310–2(d)(1) for the release of information to the public, provided that the underlying decision issued pursuant to the Rule 9200 Series meets one or more of the criteria in IM–8310–2(d)(1) for the release of information to the public, and information regarding such decision has been released to the public in unredacted form.

(B) In the event there is more than one respondent in a disciplinary decision issued pursuant to the Rule 9000 Series, and sanctions imposed on one or more, but not all, of the respondents meets one or more of the criteria in Rule IM–8310–2(d)(1) for the release of information to the public, NASD shall release to the public, in unredacted form, information with respect to the respondent(s) who meet such criteria, and may release to the public, in redacted form, information with respect to the respondent(s) who do not meet such criteria. Notwithstanding the foregoing, NASD shall release to the public, in unredacted form, information with respect to any respondent in a disciplinary decision issued pursuant to the Rule 9300 Series if the sanctions imposed on such respondent in the underlying decision issued pursuant to Rule 9200 meet one or more of the criteria for release of information to the public, and information with respect to that respondent has been released in unredacted form.

(2) No change.

(e) through (l) No change.

* * * * *

II. Self-Regulatory Organization's Statement of the Purpose of, and Statutory Basis for, the Proposed Rule Change

In its filing with the Commission, the NASD included statements concerning the purpose of and basis for its proposal and discussed any comments it received regarding the proposal. The text of these statements may be examined at the places specified in Item IV below. The NASD has prepared summaries, set forth in Sections A, B and C below, of the most significant aspects of such statements.

A. Self-Regulatory Organization's Statement of the Purpose of, and Statutory Basis for, the Proposed Rule Change

1. Purpose

The purpose of the proposed rule change is to amend IM–8310–2 to clarify the circumstances under which the NASD shall redact information released to the public with respect to Hearing Panel and Extended Hearing Panel disciplinary decisions issued under the Rule 9200 Series (hereinafter collectively referred to as ''Hearing Panel decisions''), and National Adjudicatory Council (''NAC'') disciplinary decisions issued under the Rule 9300 Series. The proposed rule change also conforms the timing for the release of information in redacted form to the timing for the release of information in unredacted form with respect to both Hearing Panel and NAC decisions. As further detailed below, the proposed rule change is effective immediately upon filing and will become operative on September 1, 2002.

IM–8310–2(d)(1) requires the NASD to release to the public information with respect to any disciplinary decision that: imposes a suspension, cancellation or expulsion of a member; suspends or revokes an associated person's registration; suspends or bars an associated person; or imposes monetary sanctions of $10,000 or more. The NASD also may release to the public information about cases that involve a significant policy or enforcement determination where the President of NASD Regulatory Policy and Oversight (formerly the President of NASD Regulation, Inc.) deems the release of such information to be in the public interest.[6]

Additionally, pursuant to an amendment effective July 10, 2000,[7] IM–8310–2 permits the NASD to publish in redacted form decisions that do not meet any of the criteria for release of information to the public. As defined in IM–8310–2(d)(1), a redacted decision is one in which the names of the parties and other identifying information (such as the names of employer firms and addresses) are redacted prior to its release.

The first proposed amendment to IM–8310–2(d)(1) would permit the prompt release, in redacted form, of disciplinary decisions that do not meet one or more of the criteria for release of information to the public under IM–8310–2(d)(1). IM–8310–2(d)(1) currently provides that the NASD shall promptly publish on its web site ''any disciplinary decision'' that meets one or more of the criteria for release of disciplinary information to the public. The July 10, 2000 amendment to IM–8310–2(d)(1) that permits the NASD to publish in redacted form disciplinary decisions that do not meet one or more of the criteria for release of information to the public, however, provides that release of information with respect to such decisions is limited to the publication of ''final, litigated decisions.''

Limiting the publication of redacted disciplinary decisions to ''final, litigated decisions'' has the unintended consequence of preventing the NASD from promptly releasing information with respect to Hearing Panel decisions; rather, the NASD must wait until the time for appeal has expired. Further, in the event the decision is appealed or called for review, the NAC decision is considered the ''final, litigated decision,'' and the Hearing Panel decision is never published. The proposed rule change would amend IM–8310–2(d)(1) to change ''final, litigated, disciplinary decision'' as to the release of information in redacted form to ''any disciplinary decision.'' This rule change would eliminate the current internal inconsistency in IM–8310–2 by establishing the same standard for the release of unredacted and redacted information, thereby permitting the NASD to publish all disciplinary decisions (in unredacted or redacted form as the case may be) promptly after issuance.

Proposed IM–8310–2(d)(1)(A) would address the situation in which the NAC lowers the sanctions imposed in a Hearing Panel decision so that the NAC decision no longer meets the criteria for release of information to the public. In such cases, the NASD releases information to the public with respect to the Hearing Panel decision in unredacted form on the NASD's web site and in redacted form with respect to the NAC decision.

To make it easier to follow the history of a case, NASD Office of Hearing Officers (''OHO'') is in the process of enhancing its web site by adding a direct link from Hearing Panel decisions that are appealed or called for review to the subsequent NAC decisions. Linking an unredacted Hearing Panel decision to a redacted NAC decision clearly

[6] In this transitional period, Mary Schapiro is serving both as President of NASD Regulation, Inc. and President of NASD Regulatory Policy and Oversight. NASD is describing Ms. Schapiro solely as President of NASD Regulatory Policy in the text of IM–8310–2 to avoid the necessity of amending the rule filing at such time as NASD Regulation, Inc. no longer exists.

[7] See Securities Exchange Act Release No. 42783 (May 15, 2000), 65 FR 32140 (May 22, 2000) (SR–NASD–2000–05).

eliminates the effectiveness of redacting the NAC decision; not linking the two decisions, however, obscures the subsequent history of the Hearing Panel decision. To eliminate the anomalous practice of initially releasing information about the same disciplinary matter first in unredacted form and then in redacted form, the proposed rule change would require the NASD to release NAC decisions that do not meet the publication criteria in unredacted form if the underlying Hearing Panel decision meets the criteria for release of information under IM–8210–2 and has been published in unredacted form. This proposed rule change would permit public investors and other interested persons who have read an unredacted Hearing Panel decision to follow the history of a disciplinary matter without having to read a NAC decision that redacts information previously released to the public.

Proposed IM–8310–2(d)(1)(B) would address the situation in which sanctions imposed on one or more, but not all, of the respondents in Hearing Panel or NAC decisions meet the criteria for release of information to the public. The proposed rule change would clarify that, in such situations, the NASD will release information with respect to both Hearing Panel and NAC decisions in unredacted form as to the respondents who meet the publication criteria and in redacted form as to the respondents who do not meet the publication criteria.

In some cases, a subsequent NAC decision may modify the sanctions imposed by the Hearing Panel so that particular respondent(s) in the Hearing Panel decision no longer meet the criteria for release of information to the public. Consistent with proposed IM–8310–2(d)(1)(A) as discussed above, information regarding respondents in NAC decisions that do not meet the criteria for release of information to the public will be released in unredacted form if the sanctions imposed on the respondent in the underlying Hearing Panel decision meet one or more of such criteria and the Hearing Panel decision as to that respondent was published in unredacted form.

2. Statutory Basis

The NASD believes that the proposal is consistent with the provisions of section 15A(b)(6) of the Act,[8] which requires, among other things, that NASD rules be designed to prevent fraudulent and manipulative acts and practices, to promote just and equitable principles of trade, and, in general, to protect investors and the public interest. The NASD believes that the proposed rule change is designed to accomplish these ends by clarifying that the NASD will release information to the public with respect to Rule 9200 Series disciplinary decisions upon the issuance of such decisions and clarifying the circumstances under which the NASD will redact information with respect to all Rule 9000 Series disciplinary decisions.

B. Self-Regulatory Organization's Statement on Burden on Competition

The NASD does not believe that the proposed rule change will result in any burden on competition that is not necessary or appropriate in furtherance of the purposes of the Act, as amended.

C. Self-Regulatory Organization's Statement on Comments on the Proposed Rule Change Received From Members, Participants or Others

Written comments were neither solicited nor received.

III. Date of Effectiveness of the Proposed Rule Change and Timing for Commission Action

Because the foregoing proposed rule change does not:

(i) significantly affect the protection of investors or the public interest;

(ii) impose any significant burden on competition; and

(iii) become operative for 30 days from the date on which it was filed, or such shorter time as the Commission may designate, it has become effective pursuant to section 19(b)(3)(A) of the Act[9] and Rule 19b–4(f)(6) thereunder.[10] At any time within 60 days of the filing of the proposed rule change, the Commission may summarily abrogate such rule change if it appears to the Commission that such action is necessary or appropriate in the public interest, for the protection of investors, or otherwise in furtherance of the purposes of the Act.

IV. Solicitation of Comments

Interested persons are invited to submit written data, views, and arguments concerning the foregoing, including whether the proposal is consistent with the Act. Persons making written submissions should file six copies thereof with the Secretary, Securities and Exchange Commission, 450 Fifth Street, NW., Washington, DC 20549–0609. Copies of the submission, all subsequent amendments, all written statements with respect to the proposed rule change that are filed with the Commission, and all written communications relating to the proposed rule change between the Commission and any person, other than those that may be withheld from the public in accordance with the provisions of 5 U.S.C. 552, will be available for inspection and copying in the Commission's Public Reference Room. Copies of such filing will also be available for inspection and copying at the principal office of the NASD. All submissions should refer to file number SR–NASD–2002–103 and should be submitted by August 28, 2002.

For the Commission, by the Division of Market Regulation, pursuant to delegated authority.[11]

Margaret H. McFarland,

Deputy Secretary.

[FR Doc. 02–19891 Filed 8–6–02; 8:45 am]

BILLING CODE 8010–01–P

[8] 15 U.S.C. 78o–3(b)(6).

[9] 15 U.S.C. 78s(b)(3)(A).

[10] 17 CFR 240.19b–4(f)(6).

[11] 17 CFR 200.30–3(a)(12).

SECURITIES AND EXCHANGE COMMISSION

[Release No. 34–46294; File No. SR–PCX–2002–46]

Self-Regulatory Organizations; Notice of Filing and Immediate Effectiveness of Proposed Rule Change by the Pacific Exchange, Inc. Relating to the Size of Option Orders Eligible for Facilitation Crossing

August 1, 2002.

Pursuant to section 19(b)(1) of the Securities Exchange Act of 1934 (''Act''),[1] and Rule 19b–4 thereunder,[2] notice is hereby given that on July 25, 2002, the Pacific Exchange, Inc. (''PCX'' or ''Exchange'') filed with the Securities and Exchange Commission (''Commission'') the proposed rule change as described in Items I, II, and III below, which Items have been prepared by the PCX. The Exchange filed the proposed rule change pursuant to section 19(b)(3)(A) of the Act,[3] and Rule 19b–4(f)(6) thereunder,[4] which renders the proposal effective upon filing with the Commission. The Commission is publishing this notice to solicit comments on the proposed rule change from interested persons.

[1] 15 U.S.C. 78s(b)(1).

[2] 17 CFR 240.19b–4.

[3] 15 U.S.C. 78s(b)(3)(A).

[4] 17 CFR 240.19b–4(f)(6). PCX provided the Commission with notice of its intention to file this proposal on July 16, 2002.

I. Self-Regulatory Organization's Statement of the Terms of Substance of the Proposed Rule Change

PCX proposes to amend its rules by reducing the minimum number of contracts necessary for member firms to effect facilitation crossing transactions on the Trading Floor pursuant to PCX Rule 6.47(b). Specifically, the Exchange proposes to reduce the minimum contract size parameter under PCX Rule 6.47(b) from 200 contracts to 50 contracts. The text of the proposed rule change is below. New proposed language is italicized; deleted language is in brackets.

* * * * *

4987 ''Crossing'' Orders and Stock/Option Orders

Rule 6.47(a)—No change.

(b) *Crossing of Facilitation Orders.* A Floor Broker who holds an order for a public customer or a broker-dealer (''customer order'') and an order for the proprietary account of a member organization that is representing that customer (the ''facilitation order'') may cross those orders only if the following procedures and requirements are followed.

(1) The size of the customer order subject to facilitation must be at least *fifty* [two hundred (200)] contracts. Orders for less than *fifty* [200] contracts may be facilitated pursuant to this rule but are not subject to subsection (4) below pertaining to firm guarantees.

(2)–(6)—No change.

(c)–(f)—No change.

* * * * *

II. Self-Regulatory Organization's Statement of the Purpose of, and Statutory Basis for, the Proposed Rule Change

In its filing with the Commission, the PCX included statements concerning the purpose of, and basis for, the proposed rule change and discussed any comments it received on the proposed rule change. The text of these statements may be examined at the places specified in Item IV below. The PCX has prepared summaries, set forth in Sections A, B and C below, of the most significant aspects of such statements.

A. Self-Regulatory Organization's Statement of the Purpose of, and Statutory Basis for, the Proposed Rule Change

1. Purpose

Under current PCX Rule 6.47(b), a Floor Broker who holds an order for a public customer or broker-dealer (''customer order'') and an order for the proprietary account of a member organization that is representing that customer or broker-dealer (''firm order'') may cross those orders, but only if certain procedures and requirements set forth in PCX Rule 6.47(b) are followed. If the transaction occurs at a price between the trading crowd's quoted market, then up to 40% of the customer order may be crossed with the firm order.[5] If the transaction occurs at a price that is equal to the trading crowd's quoted market, then up to 25% of the customer order may be crossed with the firm order.[6] In addition, current PCX Rule 6.47(b)(1) establishes a minimum order size parameter for facilitation crossing transactions. Specifically, it states that the size of a customer order subject to facilitation must be at least two hundred (200) contracts. It further states that orders for less than 200 contracts may be facilitated pursuant to PCX Rule 6.47(b), but such orders would not be subject to subsection (4) pertaining to firm guarantees. The Exchange is proposing to amend PCX Rule 6.47(b)(1) by replacing two references to ''200 contracts'' with references to ''50 contracts.''

The purpose of the proposal is to assure that member firms may receive guaranteed contracts to be eligible for participation on customer orders for 50 contracts or more. In that regard, the Exchange notes that the facilitation crossing rules of other options exchanges currently permit orders for at least 50 contracts for a guarantee whereby the firm entering the order may participate in the trade to a certain extent not to exceed 40%.[7]

2. Statutory Basis

The Exchange believes that the proposal is consistent with section 6(b) of the Act,[8] in general, and furthers the objectives of Section 6(b)(5),[9] in particular, because it is designed to promote just and equitable principles of trade, prevent fraudulent and manipulative acts and practices, and protect investors and the public interest.

B. Self-Regulatory Organization's Statement on Burden on Competition

The Exchange does not believe that the proposed rule change will impose any burden on competition.

C. Self-Regulatory Organization's Statement on Comments on the Proposed Rule Change Received From Members, Participants, or Others

Written comments on the proposed rule change were neither solicited nor received.

III. Date of Effectiveness of the Proposed Rule Change and Timing for Commission Action

The foregoing proposed rule change: (1) Does not significantly affect the protection of investors or the public interest; (2) does not impose any significant burden on competition; and (3) by its terms does not become operative for 30 days from the date of filing. In addition, the Exchange provided the Commission with written notice of its intent to file the proposed rule change at least five business days prior to the filing date. The proposed rule change has therefore become effective pursuant to section 19(b)(3)(A) of the Act[10] and Rule 19b–4(f)(6) thereunder.[11]

At any time within 60 days of the filing of such proposed rule change, the Commission may summarily abrogate such rule change if it appears to the Commission that such action is necessary or appropriate in the public interest, for the protection of investors, or otherwise in furtherance of the purposes of the Act.

IV. Solicitation of Comments

Interested persons are invited to submit written data, views and arguments concerning the foregoing, including whether the proposed rule change is consistent with the Act. Persons making written submissions should file six copies thereof with the Secretary, Securities and Exchange Commission, 450 Fifth Street, NW., Washington, DC 20549–0609. Copies of the submission, all subsequent amendments, all written statements with respect to the proposed rule change that are filed with the Commission, and all written communications relating to the proposed rule change between the Commission and any person, other than those that may be withheld from the public in accordance with the provisions of 5 U.S.C. 552, will be available for inspection and copying in the Commission's Public Reference Room. Copies of such filing will also be available for inspection and copying at the principal office of the PCX. All submissions should refer to File No.

[5] *See* PCX Rule 6.47(b)(4)(A).

[6] *See* PCX Rule 6.47(b)(4)(B).

[7] *See* Rule 950(d), Commentary .02(d) of the American Stock Exchange; Rule 6.74(d) of the Chicago Board Options Exchange; and Rule 716(d) of the International Securities Exchange.

[8] 15 U.S.C. 78f(b).

[9] 15 U.S.C. 78f(b)(5).

[10] 15 U.S.C. 78s(b)(3)(A).

[11] 17 CFR 240.19b–4(f)(6).

SR–PCX–2002–46 and should be submitted by August 28, 2002.

For the Commission, by the Division of Market Regulation, pursuant to delegated authority.[12]

Margaret H. McFarland,

Deputy Secretary.

[FR Doc. 02–19939 Filed 8–6–02; 8:45 am]

BILLING CODE 8010–01–P

SECURITIES AND EXCHANGE COMMISSION

[Release No. 34–46293; File No. SR–PCX–2002–42]

Self-Regulatory Organizations; Notice of Filing and Immediate Effectiveness of Proposed Rule Change by the Pacific Exchange, Inc. To Adopt a Tape Revenue Sharing Program for Certain Transactions on the Exchange in Tape B Securities

August 1, 2002.

Pursuant to section 19(b)(1) of the Securities Exchange Act of 1934 (''Act''),[1] and Rule 19b–4 thereunder,[2] notice is hereby given that on July 10, 2002, the Pacific Exchange, Inc. (''PCX'' or ''Exchange''), through its wholly owned subsidiary PCX Equities, Inc. (''PCXE''), filed with the Securities and Exchange Commission (''Commission'') the proposed rule change as described in Items I, II and III below, which Items have been prepared by the Exchange. The Exchange has designated this proposal as one establishing or changing a due, fee, or other charge imposed by the CHX under section 19(b)(3)(A)(ii) of the Act,[3] which renders the proposal effective upon filing with the Commission. The Commission is publishing this notice to solicit comments on the proposed rule change from interested persons.

I. Self-Regulatory Organization's Statement of the Terms of Substance of the Proposed Rule Change

The Exchange proposes to modify its fee schedule for services provided to ETP Holders and Sponsored Participants[4] on the Archipelago Exchange, the equities trading facility of PCXE. The text of the proposed rule change is below. Proposed additions are in italics.

SCHEDULE OF FEES AND CHARGES FOR EXCHANGE SERVICES

* * * * * * *	
Archipelago Exchange: Other Fees and Charges	
Market Data Revenue Sharing Credit	
Liquidity Provider Credit	*50% tape revenue credit per qualifying trade (applicable to limit orders that are residing in the Book and that execute against inbound marketable orders in Tape B securities).*
Directed Order	*50% tape revenue credit per qualifying trade (applicable to any market maker that executes against a Directed Order in a Tape B security within the Directed Order Process, as defined in PCXE Rule 7.37(a)).*
Cross Order	*50% tape revenue credit per qualifying trade (applicable to any Cross Order, as defined in PCXE Rule 7.31(s), where the ETP Holder or Sponsored Participant represents all of one side of the transaction and all or a portion of the other side in a Tape B security.*
* * * * * * *	

II. Self-Regulatory Organization's Statement of the Purpose of, and Statutory Basis for, the Proposed Rule Change

In its filing with the Commission, the PCX included statements concerning the purpose of and basis for its proposal and discussed any comments it received regarding the proposal. The text of these statements may be examined at the places specified in Item IV below. The PCX has prepared summaries, set forth in Sections A, B and C below, of the most significant aspects of such statements.

A. Self-Regulatory Organization's Statement of the Purpose of, and Statutory Basis for, the Proposed Rule Change

1. Purpose

The Exchange proposes to amend its fees charged to ETP Holders and Sponsored Participants (collectively ''Users'') that access the Archipelago Exchange (''ArcaEx'') trading facility by adopting a mechanism for sharing with Users market data revenue derived from transactions in Tape B securities.[5]

The Exchange proposes to share a portion of its gross revenues derived from market data fees (*i.e.*, tape revenue) with (i) any User that provides liquidity in a Tape B security by entering a resting limit order into the ArcaEx Book that is then executed against an incoming marketable order within the Display Order, Working Order, or Tracking Order processes; (ii) any Market Maker that executes against a Directed Order in a Tape B security within the Directed Order Process;[6] and (iii) any User that represents all of one side and all or a portion of the other side of a Cross Order[7] execution in a Tape B security (individually, ''Qualifying Transaction'' and

[12] 17 CFR 200.30–3(a)(12).

[1] 15 U.S.C. 78s(b)(1).

[2] 17 CFR 240.19b–4.

[3] 15 U.S.C. 78s(b)(3)(A)(ii).

[4] A ''Sponsored Participant'' means ''a person which has entered into a sponsorship arrangement with a Sponsoring ETP Holder pursuant to [PCXE] Rule 7.29.'' *See* PCXE Rule 1.1(tt).

[5] Tape B securities include: (a) securities that are listed for trading on the American Stock Exchange; and (b) certain other securities that are deemed to be eligible for such listing.

[6] The Directed Order Process is the first step in the ArcaEx execution algorithm. Through this Process, Users may direct an order to a Market Maker with whom they have a relationship and the Market Maker may execute the order. To access this process, the User must submit a Directed Order, which is a market or limit order to buy or sell that has been directed to the particular market maker by the User. *See* PCXE Rule 7.37(a) (description of ''Directed Order Process'').

[7] A Cross Order is defined as a two-sided order with instructions to match the identified buy-side with the identified sell-side at a specified price (the cross price), subject to price improvement requirements. *See* PCXE Rule 7.31(s).

collectively, ''Qualifying Transactions''). Under the proposal, any User that meets the requirements stated above will receive a 50 percent (50%) tape revenue credit per Qualifying Transaction that is reported over the Consolidated Tape Association's Tape B Network.

The proposed tape revenue credit is intended to create additional incentives to participants to provide liquidity on the ArcaEx facility.

2. Statutory Basis

The Exchange believes the proposal is consistent with the requirements of section 6(b) of the Act,[8] in general, and furthers the objectives of section 6(b)(4),[9] in particular, in that it provides for the equitable allocation of reasonable dues, fees and other charges among its members.

B. Self-Regulatory Organization's Statement on Burden on Competition

The Exchange does not believe that the proposed rule change will impose any burden on competition that is not necessary or appropriate in furtherance of the purposes of the Act.

C. Self-Regulatory Organization's Statement on Comments on the Proposed Rule Change Received From Members, Participants or Others

Written comments on the proposed rule change were neither solicited nor received.

III. Date of Effectiveness of the Proposed Rule Change and Timing for Commission Action

The proposed rule change has become effective pursuant to section 19(b)(3)(A)(ii) of the Act [10] and subparagraph (f)(2) of Rule 19b–4 thereunder,[11] because it establishes or changes a due, fee, or other charge. At any time within 60 days of the filing of the proposed rule change, the Commission may summarily abrogate such rule change if it appears to the Commission that such action is necessary or appropriate in the public interest, for the protection of investors, or otherwise in furtherance of the purposes of the Act.

IV. Solicitation of Comments

Interested persons are invited to submit written data, views, and arguments concerning the foregoing, including whether the proposal is consistent with the Act. Persons making written submissions should file six copies thereof with the Secretary, Securities and Exchange Commission, 450 Fifth Street, NW., Washington, DC 20549–0609. Copies of the submission, all subsequent amendments, all written statements with respect to the proposed rule change that are filed with the Commission, and all written communications relating to the proposed rule change between the Commission and any person, other than those that may be withheld from the public in accordance with the provisions of 5 U.S.C. 552, will be available for inspection and copying in the Commission's Public Reference Room. Copies of such filing will also be available for inspection and copying at the principal office of the PCX. All submissions should refer to file number SR–PCX–2002–42 and should be submitted by August 28, 2002.

For the Commission, by the Division of Market Regulation, pursuant to delegated authority.[12]

Margaret H. McFarland,

Deputy Secretary.

[FR Doc. 02–19940 Filed 8–6–02; 8:45 am]

BILLING CODE 8010–01–P

[8] 15 U.S.C. 78f(b).

[9] 15 U.S.C. 78f(b)(4).

[10] 15 U.S.C. 78s(b)(3)(A)(ii).

[11] 17 CFR 240.19b–4(f)(2).

[12] 17 CFR 200.30–3(a)(12).

OFFICE OF THE UNITED STATES TRADE REPRESENTATIVE

[Docket No. WTO/DS–262]

WTO Dispute Settlement Proceeding Regarding U.S. Sunset Reviews of Antidumping and Countervailing Duties on Steel Products From France and Germany

AGENCY: Office of the United States Trade Representative.

ACTION: Notice; request for comments.

SUMMARY: The Office of the United States Trade Representative (''USTR'') is providing notice that, on July 25, 2002, the United States received from the European Communities (''EC'') a request for consultations under the Marrakesh Agreement Establishing the World Trade Organization (''WTO Agreement'') regarding antidumping and countervailing duties imposed by the United States on imports of corrosion-resistant carbon steel flat products (''corrosion-resistant steel'') from France and Germany and imports of cut-to-length carbon steel plate (''cut-to-length steel'') from Germany. The EC alleges that the sunset review determinations made by U.S. authorities concerning these products, and certain related matters, are inconsistent with Articles 1, 2, 3, 5, 6 (including Annex II), 11.1, 11.3, 11.4, 18.3 and 18.4 of the Agreement on Implementation of Article VI of the General Agreements on Tariffs and Trade 1994 (''AD Agreement''), Articles 10, 11, 12, 15, 21.1, 21.3, 21.4, 32.3 and 32.5 of the Agreement on Subsidies and Countervailing Measures (''SCM Agreement''), Articles VI and X of the General Agreement on Tariffs and Trade 1994 (''GATT 1994''), and Article XVI:4 of the WTO Agreement. USTR invites written comments from the public concerning the issues raised in this dispute.

DATES: Although USTR will accept any comments received during the course of the dispute settlement proceedings, comments should be submitted on or before August 30, 2002, to be assured of timely consideration by USTR.

ADDRESSES: Comments should be submitted (i) electronically, to *ecsunset@ustr.gov,* Attn: ''EC Sunset Dispute'' in the subject line, or (ii) by mail, to Sandy McKinzy, Monitoring and Enforcement Unit, Office of the General Counsel, Room 122, Office of the United States Trade Representative, 600 17th Street, NW., Washington, DC, 20508, Attn: EC Sunset Dispute, with a confirmation copy sent electronically to the address above, or by fax to (202) 395–3640.

FOR FURTHER INFORMATION CONTACT: William D. Hunter, Associate General Counsel, Office of the United States Trade Representative, 600 17th Street, NW., Washington, DC, (202) 395–3582.

SUPPLEMENTARY INFORMATION: Section 127(b) of the Uruguay Round Agreements Act (''URAA'') (19 U.S.C. 3537(b)(1)) requires that notice and opportunity for comment be provided after the United States submits or receives a request for the establishment of a WTO dispute settlement panel. Consistent with this obligation, but in an effort to provide additional opportunity for comment, USTR is providing notice that consultations have been requested pursuant to the WTO Dispute Settlement Understanding (''DSU''). If such consultation should fail to resolve the matter and a dispute settlement panel is established pursuant to the DSU, such panel, which would hold its meetings in Geneva, Switzerland, would be expected to issue a report on its findings and recommendations within six to nine months after it is established.

Major Issues Raised by the EC

With respect to the measures at issue, the EC request for consultations refers to the following:

- The final results of the sunset reviews by the DOC of the antidumping duty order on corrosion-resistant steel

from France (65 FR 18050 (April 6, 2000)), the antidumping duty orders on corrosion-resistant steel and cut-to length steel from Germany (65 FR 18051 (April 6, 2000) and 65 FR 18055 (April 6, 2000), respectively), and the countervailing duty order on corrosion-resistant steel from France (65 FR 18063 (April 6, 2000));

• The ITC determinations in the sunset reviews of the antidumping and countervailing duty orders on cut-to-length steel from Germany and on corrosion-resistant steel from France and Germany (USITC Publication 3364, November 2000; 65 FR 75301 (December 1, 2000));

• The DOC notice of the continuation of the antidumping and countervailing duty orders on cut-to-length steel from Germany and on corrosion-resistant steel from France and Germany (65 FR 78469 (December 15, 2000)); and

• Certain provisions and procedures contained in Sections 751 (c) and 752 of the Tariff Act of 1930 (the ''Act''), the implementing regulations (referred to by the EC as ''19 CFR Section 351''), and the Sunset Policy Bulletin issued by the DOC (63 FR 18871 (April 16, 1998)).

With respect to the claims of WTO-inconsistency, the EC request for consultations refers to the following:

• The presumption of continuation or recurrence of dumping or countervailable subsidy with respect to an interested party when this latter has waived its participation in a review conducted by the DOC (section 751(c)(4)(B) of the Act);

• The specific 0.5% *de minimis* dumping margin in a sunset review (section 752(c)(4)(B) of the Act, DOC regulation 19 CFR 351.106(c), section II.A.5 of the DOC Sunset Policy Bulletin);

• The specific conditions for assessing cumulatively the volume and effect of imports of the subject merchandise from all subject countries in a sunset review (section 752(a)(7) of the Act);

• The assessment of the likely volume of imports in a sunset review (sections 752(a)(2) of the Act) and the failure to determine that imports from France or Germany would be likely to rise above their historical and current negligible volume;

• The failure of the ITC to use publicly available information to account for the missing information due to the limited cooperation from the domestic producers, in particular from the service centers;

• the decision of the ITC to assess the likely impact of French and German imports cumulatively with the imports from ''all subject countries''.

Public Comment: Requirements for Submissions

Interested persons are invited to submit write comments concerning the issues raised in this dispute. Persons submitting comments may either send one copy by U.S. mail, first class, postage prepaid, to Sandy McKinzy at the address listed above, or transmit a copy electronically to *ecsunset@ustr.gov,* with ''EC Sunset Dispute'' in the subject line. For documents sent by U.S. mail, USTR requests that the submitter provide a confirmation copy, either electronically, to the electronic mail address listed above, or by fax to (202) 395–3640, USTR encourages the submission of documents in Adobe PDF format, as attachments to an electronic mail. Interested persons who make submissions by electronic mail should not provide separate cover letters; information that might appear in a cover letter should be included in the submission itself. Similar, to the extent possible, any attachments to the submission should be included in the same file as the submission itself, and not as separate files. Comments must be in English. A person requesting that information contained in a comment submitted by that person be treated as confidential business information must certify that such information is business confidential and would not customarily be released to the public by the submitting person. Confidential business information must be clearly marked ''BUSINESS CONFIDENTIAL'' in a contrasting color ink at the top of each page of each copy.

Information or advice contained in a comment submitted, other than business confidential information, may be determined by USTR to be confidential in accordance with section 135(g)(2) of the Trade Act 1974 (19 U.S.C. 2155(g)(2)). If the submitting person believes that information or advice may qualify as such, the submitting person—

(1) Must so designate the information or advice;

(2) Must clearly mark the material as ''SUBMITTED IN CONFIDENCE'' in a contrasting color ink at the top of each page of each copy; and

(3) Is encouraged to provide a non-confidential summary of the information or advice.

Pursuant to section 127(e) of the URAA (19 U.S.C. 3537(e)), USTR will maintain a file on this dispute settlement proceeding, assessable to the public, in the USTR Reading Room, which is located at 1724 F Street, NW., Washington, DC 20508. The public file will include non-confidential comments received by USTR from the public with respect to the dispute; if a dispute settlement panel is convened, the U.S. submissions to that panel, the submissions, or non-confidential summaries of submissions, to the panel received from other participants in the dispute, as well as the report of the panel; and, if applicable, the report of the Appellate Body. An appointment to review the public file (Docket No. WT/DS–262, EC Sunset Dispute) may be made by selling the USTR Reading Room at (202) 395–6186. The USTR Reading Room is open to the public 9:30 a.m. to 12 noon and 1 p.m. to 4 p.m., Monday through Friday.

Bruce Hirsh,

Acting Assistant United States Trade Representative for Monitoring and Enforcement.

[FR Doc. 02–20002 Filed 8–6–02; 8:45 am]

BILLING CODE 3190–01–M

DEPARTMENT OF TRANSPORTATION

Federal Highway Administration

Environmental Impact Statement: Hill and Blain Counties, Montana

AGENCY: Federal Highway Administration (FHWA), DOT.

ACTION: Notice of intent.

SUMMARY: FHWA hereby gives notice that it intends to prepare an Environmental Impact Statement (EIS) for improvements to US Highway 2, in Hill and Blaine Counties, Montana.

FOR FURTHER INFORMATION CONTACT: Mr. Dale Paulson, Program Development Engineer, FHWA Montana Division, 2880 Skyway Drive, Helena, Montana 59602; Telephone (406) 449–5302, extension 239; or Mr. Carl Helvik, Consultant Design, Montana Department of Transportation, 2701 Prospect Avenue, Helena, Montan 59620–1001; Telephone (406) 444–5446.

SUPPLEMENTARY INFORMATION:

Electronic Access

An electronic copy of this document may be download using a modem and suitable communications software from the Government Printing Office's Electronic Bulletin Board Service at (202) 512–1661. Interent users may reach the Office of the Federal Register's home page at: *http://www.nara.gov/fedreg* and the Government Printing Office's database at: *http://www.access.gpo.gov/nara.*

Background

The FHWA, in cooperation with the Montana Department of Transportation

(MDT), will prepare an EIS for a proposal to improve US Highway 2 in Hill and Blaine Counties, Montana. The itnent of the proposed project is to replace the aging US Highway 2 with an efficient and safe highway that will be attracitve to the needs of agriculture, industry, commerce and tourism in the ara. The proposed imrpovement corridor is between Havre and Fort Belknap, a distance of approximately 72km (45 miles), and includes the towns of Lohman, Chinook, Zurich, and Harlem.

Alterantives under consideration include: (1) Taking no action; (2) improvements within the existing alignment; (3) improvements on a new alignment; and (4) combination of alternatives (2) and (3).

An extensive public involvement process will be conducted to solicit views and comments from the appropriate agencies and interested private organizations and citizens. The process will include a Citizens Advisory Committee, public meetings and workshops, a public hearing, small group presentations, and meetings with individuals along the corridor. The draft EIS will be available for public and agency reviews and comments prior to the public hearing. Public notice will be given of the time and place of all meetings and hearings.

To ensure that the full range of issues related to this proposed action are addressed and all significant issues identified, comments and suggestions are invited from all interested parties. Comments or questions concerning this proposed action and the EIS should be directed to the FHWA at the address provided.

(Catalog of Federal Domestic Assistance Project Number 20.205, Highway Planning and Construction. The regulations implementing Executive Order 12372 regarding intergovernmental consultation on Federal programs and activities apply to this proposed action.)

(Authority: 23 U.S.C. 315; 49 CFR 1.48)

Issued on: August 1, 2002.

Dale W. Paulson,

Program Development Engineer, Montana Division, Federal Highway Administration, Helena, MT.

[FR Doc. 02–19902 Filed 8–6–02; 8:45 am]

BILLING CODE 4910–22–M

DEPARTMENT OF TRANSPORTATION

Research and Special Programs Administration

Actions on Exemption Applications

AGENCY: Research and Special Programs Administration, DOT.

ACTION: Notice of actions on exemption applications.

SUMMARY: In accordance with the procedures governing the application for, and the processing of, exemptions from the Department of Transportation's Hazardous Materials Regulations (49 CFR Part 107, Subpart B), notice is hereby given of the actions on exemption applications in April–June 2002. The modes of transportation involved are identified by a number in the ''Nature of Application'' portion of the table below as follows: 1—Motor vehicles, 2—Rail freight, 3—Cargo vessel, 4—Cargo aircraft only, 5—Passenger-carrying aircraft. Application numbers prefixed by the letters EE represent applications for Emergency Exemptions. It should be noted that some of the sections cited were those in effect at the time certain exemptions were issued.

Issued in Washington, DC, on July 19, 2002.

R. Ryan Posten,

Exemptions Program Officer, Office of Hazardous Materials Exemptions and Approvals.

Application No.	Exemption No.	Applicant	Regulation(s) affected	Nature of exemption thereof
MODIFICATION EXEMPTIONS				
4453–M	DOT–E 4453	Dyno Nobel, Inc., Salt Lake City, UT.	49 CFR 172.101, 173.62, 176.415, 176.83, Column (8C).	To modify the exemption to authorize the transportation of additional Division 1.5D liquid blasting explosives in non-DOT specification bulk cargo tanks, trailers and motor vehicles.
6805–M	DOT–E 6805	Air Liquide America Corporation, Houston, TX.	49 CFR 173.301(d), 173.302(a) (3).	To modify the exemption to authorize the use of DOT Specification 3A and 3AA cylinders as additional packaging for the transportation of Division 2.1 and 2.3 materials and a language clarification of the low pressure cylinders for transporting carbon monoxide.
7007–M	DOT–E 7007	Allied Universal Corp., Miami, FL.	49 CFR 173.314(c), 179.3 ..	To modify the exemption to authorize the use of additional non-DOT specification multi-unit tank car tanks with minimum shell thickness for the transportation of Division 2.3 materials.
7657–M	DOT–E 7657	Welker Engineering Company, Sugar Land, TX.	49 CFR 173.201, 173.202, 173.203, 173.302(a)(1), 173.304(a)(1), 173.304(b)(1), 175.3.	To modify the exemption to authorize the transportation of additional Division 2.1, 2.2, 2.3 and Class 3 materials in a non-DOT specification stainless steel cylinder.
7765–M	DOT–E 7765	Carleton Technologies, Inc., Orchard Park, NY.	49 CFR 173.302(a)(4), 175.3.	To modify the exemption to authorize the use of an additional non-DOT specification cylinder bottle assembly unit for the transportation of Division 2.2 materials.
8215–M	DOT–E 8215	Olin Corp., Brass & Winchester, Inc., East Alton, IL.	49 CFR 172.320, 173.230, 173.62(c), Part 172, Subpart E.	To modify the exemption to authorize the addition of a Division 1.1D material and for Division 1.1A and 1.1D materials to be transported in a newly designed motor vehicle (trailer).
8439–M	DOT–E 8439	Kidde Aerospace, Wilson, NC.	49 CFR 173.302, 173.304, 175.3.	To modify the exemption to authorize the transportation of an additional Division 2.2 material in non-DOT specification cylinders.

Application No.	Exemption No.	Applicant	Regulation(s) affected	Nature of exemption thereof
8451–M	DOT–E 8451	Olin Corporation, Winchester Group, East Alton, IL.	49 CFR 173.3, 173.52, 173.54, 173.60, 174.3, 175.3, 177.801.	To modify the exemption to authorize an alternative outer packaging for the transportation of not more than 25 grams of explosive or pyrotechnic materials classed as Division 1.4E.
8554–M	DOT–E 8554	TRADESTAR Corporation, West Jordan, UT.	49 CFR 173.154, 173.93	To modify the exemption to authorize a new cargo tank design for the transportation of Division 1.5 and 5.1 materials in bulk.
8723–M	DOT–E 8723	Dyno Nobel, Inc., Salt Lake City, UT.	49 CFR 172.101, 173.242, 173.62, 176.83, 177.848.	To modify the exemption to authorize the transportation of additional Division 1.5D liquid blasting explosives in non-DOT specification bulk cargo tanks, trailers and motor vehicles.
9884–M	DOT–E 9884	Puritan Bennett Corp (Div. of Tyco Healthcare), Indianapolis, IN.	49 CFR 173.316	To modify the exemption to authorize the use of a blazing procedure for bonding of the non-DOT specification cylinder tubes with the heads for the transportation of certain Division 2.2 materials.
10427–M	DOT–E 10427	Astrotech Space Operations, Inc., Titusville, FL.	49 CFR 173.301, 173.302, 173.336, 173.61(d), 177.848(d).	To modify the exemption to authorize two additional launch vehicles that will utilize their fairing for packaging of spacecrafts during transport and a quantity increase of several hazardous materials contained in the ''flight-ready'' spacecraft.
10427–M	DOT–E 10427	Astrotech Space Operations, Inc., Titusville, FL.	49 CFR 173.301, 173.302, 173.336, 173.61(d), 177.848(d).	To authorize the shipment of Division 1.1 detonating cord and to correct the quantity of Xenon to 700 pounds.
10677–M	DOT–E 10677	Primus AB, Solna, SW ...	49 CFR 173.304(d)(3)(ii)	To modify the exemption to authorize the transportation of additional Division 2.1 materials and an increase in maximum charging pressure.
10751–M	DOT–E 10751	Dyno Nobel, Inc., Salt Lake City, UT.	49 CFR 177.823, 177.835(c)(3), 177.848.	To modify the exemption to authorize the transportation of Division 1.5D liquid blasting explosives in non-DOT specification bulk cargo tanks, trailers and motor vehicles.
10869–M	DOT–E 10869	Norris Cylinder Company, Longview, TX.	49 CFR 173.301(b), 173.302(a)(5), 173.304(a), 175.3.	To modify the exemption to authorize an increase in service pressure from 5000-psi to a maximum of 6000-psi for the non-DOT specification steel cylinders transporting certain Division 2.1, 2.2, 2.3 materials.
10929–M	DOT–E 10929	Ashland Inc., Columbus, OH.	49 CFR 172.302(c), 174.67(i)(j).	To modify the exemption of authorize the transportation of additional Class 3 materials in DOT Specification tank cars.
11344–M	DOT–E 11344	E.I. DuPont de Nemours & Company, Inc. Wilmington, DE.	49 CFR 172.302(c), 174.67(i), (j).	To modify the exemption to authorize the transportation of an additional Division 6.1 material in DOT Specification tank cars.
11379–M	DOT–E 11379	TRW Automotive Occupant Safety Systems, Washington, MI.	49 CFR 173.301(h), 173.302.	To modify the exemption to authorize the use of the non-DOT specification pressure vessels in non-automotive safety systems.
11579–M	DOT–E 11579	Dyno Nobel, Inc., Salt Lake City, UT.	49 CFR 177.848(e)(2), 177.848(g)(3).	To modify the exemption to authorize the transportation of additional Division 1.5D liquid blasting explosives in non-DOT specification cargo tanks.
11803–M	DOT–E 11803	Chart, Inc. (Storage Systems Div.), Plaistow, NH.	49 CFR 172.203(a), 173.26, 173.319, 179.13, 179.401–1.	To modify the exemption to authorize an increase of the maximum gross weight on rail from 263,000 lbs. to 286,000 lbs. for the transportation of Division 2.2 materials in DOT Specification tank cars.
12102–M	DOT–E 12102	Onyx Environmental Services. L.L.C., Ledgewood, NJ.	49 CFR 173.56(b), 173.56(i)	To modify the exemption to authorize the transportation of an additional Division 1.1D explosive material desensitized in an appropriate solvent to be shipped as a Class 3 material.
12196–M	DOT–E 12196	HR Textron, Pacoima, CA.	49 CFR 173.302(a), 173.34(e), 175.3.	To modify the exemption to authorize the hydrostatic retest period from 5 to 18 years for non-DOT specification stainless steel alloy cylinders used for the transportation of Division 2.2 materials.
12442–M	DOT–E 12442	Cryogenic Vessel Alternatives, La Porte, TX.	49 CFR 176.76(g)(1), 178.318.	To modify the exemption to authorize an increased service pressure from 45 psig to 100 psig for the 2200 gallon capacity internal insulated portable tank for the transportation of Division 2.2 materials.
12818–M	DOT–E 12818	HRD Aero Systems Inc., Valencia, CA.	49 CFR 173.301(i), 173.302	To reissue the exemption originally issued on an emergency basis for the transportation of certain foreign non-DOT specification steel cylinders used as components (fire extinguishers) in aircraft.

Application No.	Exemption No.	Applicant	Regulation(s) affected	Nature of exemption thereof
12882–M	DOT–E 12882	Eagle-Picher Technologies, LLC, Joplin, MO.	49 CFR 173.302(a), 173.34(d), 175.3.	To reissue the exemption originally issued on an emergency basis for the transportation of a Division 2.1 material in a non-DOT specification pressure vessel.
12885–M	DOT–E 12885	U.S. Department of Agriculture, Forest Service, Missoula, MT.	49 CFR 173.202(c)	To modify the exemption to authorize eliminating the requirement that the pump in the helitorch frame be an explosion proof diaphragm fuel transfer pump when transporting a Class 3 material.
		NEW EXEMPTIONS		
12433–N	DOT–E 12433	The Lighter Company, Inc., Miami, FL.	49 CFR 173.308(b)	To authorize the transportation and reclassification of lighters in limited quantities to be transported as ORM–D. (mode 1)
12634–N	DOT–E 12634	Norman International, Los Angeles, CA.	49 CFR 173.12(b)(2)	To authorize the manufacture, mark, sale and use of a corrugated fiberboard box as the outer packaging for lab pack applications in accordance with section 173.12(b). (modes 1, 2)
12661–N	DOT–E 12661	United Parcel Service (UPS), Atlanta, GA.	49 CFR 172.202, 172.203(c), (k), (m), 172.301, 172.302(c), 172.400.	To authorize the transportation in commerce of certain hazardous materials that are not properly packaged, marked, labeled or classed in accordance with the 49 CFR. (mode 1)
12690–N	DOT–E 12690	Air Liquide America Corporation, Houston, TX.	49 CFR 173.304(a)(2), Note 2.	To authorize the transportation in commerce of DOT specification 3AA cylinders having a water capacity of approximately 950 pounds, which when filled, would exceed the 150 pound limit for use in transporting chlorine. (mode 1)
12716–N	DOT–E 12716	Air Liquide America Corporation, Houston, TX.	49 CFR 173.304(a)(2)	To authorize the transportation in commerce of chlorine in uninsulated DOT Specification 3AAX cylinders permanently mounted on a motor vehicle. (mode 1)
12741–N	DOT–E 12741	Thunderbird Cylinder Inc., Phoenix, AZ.	49 CFR 172.203(a), 172.301(c), 173.302(c)(2), (3), (4), (5), 173.34(e)(1), (e)(4), (e)(8)(ii), (e)(8)(iii), 173.34(e)(14), (e)(16).	To authorize the transportation in commerce of certain DOT Specification 3A and 3AA cylinders which have been alternatively ultrasonically retested for sue in transporting Division 2.1, 2.2 and 2.3 materials. (modes 1, 2, 3, 4, 5)
12800–N	DOT–E 12800	Department of Energy (DOE), Washington, DC.	49 CFR 173.411(b)(2)	To authorize the transportation in commerce of unit train shipments in exclusive use of soil-like radioactive LSA–11 waste material in strong tight bulk packages (closed rail cars). (mode 2)
12844–N	DOT–E 12844	Delphi Automotive Systems, Troy, MI.	49 CFR 173.301(h), 173.302(a), 175.3.	To authorize the manufacture, marking, sale and use of non-DOT specification pressure vessels for use as components of automobile vehicle safety systems. (mode 1)
12871–N	DOT–E 12871	Southern California Edison, San Clemente, CA.	49 CFR 173.403, 173.411, 173.427(a), 173.427(b)(c), 173.465(c)&(d).	To authorize the one-time transportation of a nuclear generating-station reactor pressure vessel package transport system to a burial site. (modes 1, 2, 3)
12880–N	DOT–E 12880	Northrop Grumman Corporation, Baltimore, MD.	49 CFR 172.102, 173.222(b)(3), 173.304(a)(2), 173.34(d).	To authorize the transportation in commerce of a specially designed device consisting of a non-DOT specification cylinder containing 25 grams of Division 2.3 material. (modes 1, 3, 4)
12898–N	DOT–E 12989	SWS Environmental First Response, Panama City Beach, FL.	49 CFR 173.201, 173.202, 173.203, 173.226, 173.227, 173.302, 173.304, 173.34(d).	To authorize the manufacturing, marking, sale and use of a non-DOT specification salvage cylinder for overpacking damage or leaking cylinders of pressurized and non-pressurized hazardous materials for transportation in commerce (mode 1)
12905–N	DOT–E 12905	Railway Progress Institute, Inc., Alexandria, VA.	49 CFR 172.203(a), 172.302(c), 173.22a(a)&(b), 179.100–20(a), 179.200–24(a)&(b), 179.201–10(a), 179.220–25.	To authorize the transportation in commerce of various hazardous materials on rail cars without the required head stamping and without the exemption number on the rail car or the shipping paper. (mode 2)
12920–N	DOT–E 12920	Epichem, Inc., Haverhill, MA.	49 CFR 173.181(c)	To authorize the transportation in commerce of pyrophoric materials in combination packagings with inner containers that exceed currently authorized quantities. (modes 1, 3)
12925–N	DOT–E 12925	U.S. Department of Energy, Oak Ridge, TN.	49 CFR 173.244	To authorize the one-time, one-way transportation in commerce of solidified sodium metal in certain non-DOT specification bulk packaging. (mode 1)

Application No.	Exemption No.	Applicant	Regulation(s) affected	Nature of exemption thereof
12926–N	DOT–E 12926	S.C. Johnson & Son, Inc., Washington, DC.	49 CFR 173.306(a)(1)	To authorize the transportation in commerce of aersols, non-flammable, Division 2.2 in non-DOT specification containers. (mode 1)
12927–N	DOT–E 12927	Tri-Wall, A Weyerhaeuser Business, Butler, IN.	49 CFR 173.12(b)(2)(i)	To authorize the manufacture, marking and sale of a corrugated fiberboard box for use as the outer packaging for lab pack applications. (mode 1)
12930–N	DOT–E 12930	Roeder Cartage Company, Inc., Lima, OH.	49 CFR 180.407(c), (e) & (f)	To authorize the transportation of certain lined DOT Specification cargo tanks which are not subject to the internal visual inspections for use in transporting certain Class 8 hazardous materials. (modes 1, 3)
12946–N	DOT–E 12946	Baker Atlas, Houston, TX	49 CFR 173.304	To authorize the one-time transportation in commerce of 60 non-DOT specification cylinders for disposal containing chlorine trifluoride, Division 2.3, subsidiary hazards 5.1, 8 PIH Zone B. (mode 1)
12956–N	DOT–E 12956	Frazee Industries, Incorporated, San Diego, CA.	49 CFR 172.301(c), Part 172, Subpart C.	To authorize the transportation in commerce of combination packagings of 1 gallon and 5 gallon steel containers without overpack or shipping papers from the manufacturing facility to the distribution center. (mode 1)
12969–N	DOT–E 12969	Arrowhead Industrial Services Inc., Graham, NC.	49 CFR 172.203(a), 172.301(c), 173.34(d).	To authorize the transportation in commerce of non-DOT specification cylinders containing Division 2.2 material overpacked in strong outside packaging for transporting to remote test sites. (mode 1)
12970–N	DOT–E 12970	IMR Corporation, Tulsa, OK.	49 CFR 172.101(c)	To authorize the transportation in commerce of limited quantities of hazardous material with alternative shipping name on shipping papers. (mode 1)
12978–N	DOT–E 12978	Genesis Environmental Ltd., McKeesport, PA.	49 CFR 172.101 Col. 8(b) & 8(c), 173.197.	To authorize the transportation in commerce of solid regulated medical waste in non-DOT specification packaging consisting of a bulk outer packaging and a non-bulk inner packaging. (mode 1)
12979–N	DOT–E 12979	Medical Microwave, Inc., Livington, NJ.	49 CFR 172.101 Col. 8(b) & 8(c), 173.197.	To authorize the transportation in commerce of solid regulated medical in non-DOT specification packaging consisting of a bulk outer packaging and non-bulk inner packaging. (mode 1)
		EMERGENCY EXEMPTIONS		
EE 6611–M	DOT–E 6611	Gardner Cryogenics, Lehigh, PA.	49 CFR 172.203(a), 173.318, 176.76(h), 177.840, 178.338.	Modification exemption to insert effective date in marking requirement. (modes 1, 3)
EE 6765–M	DOT–E 6765	Gardner Cryogenics, Bethlehem, PA.	49 CFR 172.203, 173.318 ..	Modification exemption to place a sticker on the specification plate identifying the exemption authorizing use of the portable tank. (modes 1, 3)
EE 7737–M	DOT–E 7737	Catalina Cylinders, Hampton, VA.	49 CFR 173.192, 173.201(c), 173.302(a), 173.304(a), 173.304(d), 173.337, 175.3, 178.42.	Emergency request to modify exemption to remove ''Catalina'' from the cylinder marking paragraph of the exemption. (modes 1, 2, 3, 4)
EE 8556–M	DOT–E 8556	Gardner Cryogenics, Lehigh, PA.	49 CFR 173.318, 176.76(g)(1), 178.338.	Exemption request to modify exemption to insert effective date for marking requirement. (modes 1, 2)
EE 8995–M	DOT–E 8995	BASF, Mount Olive, NJ ..	49 CFR 173.315(a)(1), 174.63(c)(1).	Emergency request to modify DOT–E 8995 to authorize tanks up to 2,050 gallon capacity. (modes 1, 2, 3)
EE 9266–M	DOT–E 9266	Gold Inspection Service, Inc., Kingwood, TX.	49 CFR173.315, 178.245 ...	Emergency request to add additional materials to this exemption. (modes 1, 2, 3)
EE 11167–M	DOT–E 11167	Columbiana Boiler Company, Columbiana, OH.	49 CFR 172.101, 173.240, 173.241, 173.242, 173.243, 173.244, 173.245.	
EE 12855–M	DOT–E 12855	KRATON Polymers U.S. LLC, Belpre, OH.	49 CFR 172.302(c), 173.240.	Emergency request to modify exemption to transport additional pressure vessels. (mode 1)
EE 12919–M	DOT–E 12919	Acambis, Inc., Canton, MA.	49 CFR 173.196(b), 178.609.	Emergency modification request to extend expiration date and prohibit dry ice from being present in package. (mode 1)
EE 12959–N	DOT–E 12959	Sara Export Import, Escondido, CA.	49 CFR 172.102 SP N10, 172.301(c), 173.21(i).	Emergency request to transport unapproved lighters by vessel to Hong Kong to be destroyed. (mode 4)

Application No.	Exemption No.	Applicant	Regulation(s) affected	Nature of exemption thereof
EE 12974–N	DOT–E 12974	ShipMate, Inc., Torrance, CA.	49 CFR 172.203(a), 172.300(a), 172.301(c), 172.324.	Emergency request to transport packages of hazardous materials that were incorrectly marked ''RQ'' indicating the package contains a hazardous substance when it does not. (modes 1, 2, 3, 4, 5)
EE 12975–N	DOT–E 12975	Monsanto Company, St. Louis, MO.	49 CFR 178.270–6	Request for an emergency exemption to transport a damaged IMO portable tank. (modes 1, 2)
EE 12976–N	DOT–E 12976	University of Pittsburgh, Pittsburgh, PA.	49 CFR 172.302(c), 173.196.	Emergency request to transport live non-human primates infected with Division 6.2 materials from an existing animal facility to a newly constructed facility 15 miles away in non-specification packaging. (mode 1)
EE 12977–N	DOT–E 12977	JCI Jones Chemicals, Barberton, OH.	49 CFR 172.302(c), 173.24(b), 179.300–12(b), 179.300–13(a), 179.300–14.	Request for an emergency exemption to transport a leaking ton cylinder that has been fitted with an emergency B kit to prevent leaking during transportation. (mode 1)
EE 12981–N	DOT–E 12981	Airgas, Inc., Cheyenne, WY.	49 CFR 172.203(a), 173.315(n)(2).	Emergency request for alternative to emergency discharge control requirement. (mode 1)
EE 12983–N	DOT–E 12983	Harcros Chemicals, Inc., Kansas City, KS.	49 CFR 172.302(c), 173.24(b), 179.300–12(b), 179.300–13(a), 179.300–14.	Request for an emergency exemption to transport a leaking ton cylinder that has been fitted with a B kit to prevent leaking during transportation. (mode 1)
EE 12984–N	DOT–E 12984	DPC Industries, Inc., Houston, TX.	49 CFR 172.301(c), 173.34(d).	Emergency request to transport a 3A480 cylinder containing chlorine that has developed a leak at the fuze plugs and has a Chlorine Institute A Kit applied. (mode 1)
EE 12985–N	DOT–E 12985	Allied Universal Corp., Miami, FL.	49 CFR 172.302(c), 173.24(b), 179.300–12(b), 179.300–13(a), 179.300–14.	Request for an emergency exemption to authorize the transportation of a leaking ton container that has been fitted with a B kit to prevent leaking during transportation. (mode 1)
EE 12986–N	DOT–E 12986	Columbia Gas Transmission Corp, Fairfax, VA.	49 CFR 173.302(a)(1), 173.304(a), (d).	Emergency request to use an FRP–1 cylinder to transport natural gas (mode 1)
EE 12993–N	DOT–E 12993	Transportation Services Unlimited, Inc., Tampa, FL.	49 CFR 172.302(c), 173.24(b), 179.300–12(b), 179.300–13(a), 179.300–14.	Request for emergency exemption to transport a leaking ton container that has been fitted with a B kit to prevent leakage during transportation. (mode 1)
EE 13002–N	DOT–E 13002	U.S. Department of Defense, Washington, DC.	49 172.301(c), 173.203(a), 173.306(f)(1).	Request for an emergency exemption to transport a division 2.2 material in diaphram and bladder type accumulator. (modes 1, 2, 3, 4)
EE 13005–N	DOT–E 13005	JCI Jones Chemicals, Inc., Torrance, CA.	49 CFR 172.302(c), 173.24(b), 179.300–12(b), 179.300–13(a), 179.300–14.	Request for an emergency exemption to transport a leaking ton cylinder that has been fitted with a B kit to prevent leaking during transportation. (mode 1)
EE 13006–N	DOT–E 13006	DXI Industries, Inc., Houston, TX.	49 CFR 172.302(c), 173.24(b), 179.300–12(b), 179.300–13(a), 179.300–14.	Request for emergency exemption to transport a leaking ton cylinder that has been fitted with a B kit. (mode 1)
EE 13007–M	DOT–E 13007	Slurry Explosive Corporation, Columbus, KS.	49 CFR 172.301(c), 173.24a(b)(2).	To authorize an additional commodity to an emergency exemption. (mode 1)
EE 13008–N	DOT–E 13008	U.S. Department of Agriculture, Forest Service, Missoula, MT.	49 CFR 173.202(c)	Request for emergency exemption to authorize the transportation of gelled gasoline in a non-DOT specification container. (mode 1)
EE 13009–N	DOT–E 13009	Jones Chemicals, Inc., Milford, VA.	49 CFR 172.301(c), 173.34(d).	Emergency request to transport a 3A480 cylinder of chlorine that developed a leak from the valve and has a Chlorine Institute approved A-Kit applied. (mode 1)
EE 13011–N	DOT–E 13011	Allied Universal Corp., Miami, FL.	49 CFR 172.302(c), 173.24(b), 179.300–12(b), 179.300–13(a), 179.300–14.	Request for emergency exemption to transport a leaking ton cylinder containing sulfur dioxide that had been fitted with a B kit to prevent leaking during transportation. (mode 1)
EE 13014–N	DOT–E 13014	Acambis, Inc., Cambridge, MA.	49 CFR 173.196, 178.609 ..	Emergency request to transport a solid infectious substance in a non-specification packaging. (mode 1)
EE 13014–M	DOT–E 13014	Acambis, Canton, MA	49 CFR 173.196, 178.609 ..	To authorize an additional location. (mode 1)
EE 13015–N	DOT–E 13015	BOC Gases, Murray Hill, NJ.	49 CFR 172.203(a), 172.301(c), 173.400a(a)(1), 178.35(f).	Emergency request for authorization to transport cylinders that are fitted with cylinder collars that obscure required marking. (mode 1)
EE 13016–N	DOT–E 13016	Carrier Transicold, Syracuse, NY.	49 CFR 172.301(c), 173.24(b)(1).	Request for emergency exemption to authorize the release of carbon dioxide gas in freight containers during transportation. (modes 1, 2, 3)

Application No.	Exemption No.	Applicant	Regulation(s) affected	Nature of exemption thereof
EE 13017–N	DOT–E 13017	Harcros Chemicals, Inc., Kansas City, KS.	49 CFR 172.302(c), 173.24(b), 179.300–12(b), 179.300–13(a), 179.300–14.	Request for an emergency exemption to transport a leaking ton cylinder that has been fitted with a B kit to prevent leaking during transportation. (mode 1)
EE 13018–N	DOT–E 13018	JCI Jones Chemicals, Charlotte, NC.	49 CFR 173.24	Request emergency exemption to transport a leaking ton cylinder that has been fitted with a B kit to prevent leaking during transportation. (mode 1)
EE 13019–N	DOT–E 13019	JCI Jones Chemicals, Inc., Cadedonia, NY.	49 CFR 172.302(c), 179.300–12(b), 179.300–13(a), 179.300–14.	Emergency request to transport a DOT 106A500 tank car tank containing Chlorine which has developed a leak and has a Chlorine Institute B Kit applied. (mode 1)
EE 13030–N	DOT–E 13030	DPC Industries, Inc., Houston, TX.	49 CFR 172.301(c), 173.34(d).	Emergency request to transport a cylinder of chlorine that has developed a leak and has a Chlorine Institute A Kit applied. (mode 1)
EE 13031–N	DOT–E 13031	Harcros Chemicals, Kansas City, KS.	49 CFR 172.302(c), 179.300–12(b), 179.300–13(a), 179.300–14.	Emergency request to authorize the transportation of a DOT 106A500 tank car tank containing chlorine that has developed a leak and has a Chlorine Institute B Kit applied.
EE 13035–N	DOT–E 13035	JCI Jones Chemicals, Inc., Caledonia, NY.	49 CFR 172.302(c), 179.300–12(b), 179.300–13(a), 179.300–14.	Emergency request to authorize the transportation of a DOT 106A500 tank car tank containing chlorine that has developed a leak and has a Chlorine Institute B Kit applied. (mode 1)
EE 13037–N	DOT–E 13037	Brenntag Mid-South, Inc., Saint Louis, MO.	49 CFR 172.301(c), 173.304(a)(2), 173.34(d).	Emergency request to authorize the transportation of a DOT 4B300 cylinder containing sulfur dioxide that has developed a leak and is contained in a salvage cylinder. (mode 1)
EE 13038–N	DOT–E 13038	Brenntag Mid-South, Inc., St. Louis, MO.	49 CFR 172.302(c), 179.300–12(b), 179.300–13(a), 179.300–14.	Emergency request to authorize the transportation of a DOT 106A500X tank car tank containing chlorine that has developed a leak and has a Chlorine Institute B Kit applied. (mode 1)
EE 13039–N	DOT–E 13039	Airgas, East, Binghamton, NY.	49 CFR 172.301(c), 173.34(d).	Emergency request to authorize the one-time transportation of sulfur dioxide in a DOT Specification 3A480 cylinder equipped with a Chlorine Institute Emergency ''A-Kit'' to prevent leakage during transportation. (mode 1)
EE 13041–N	DOT–E 13041	Department of State, Sterling, VA.	49 CFR 172.101, Table Column 8C.	Emergency request to authorize the transportation of solid materials that are contaminated with or suspected to be contaminated with anthrax. (mode 1)
EE 13042–N	DOT–E 13042	Department of State, Sterling, VA.	49 CFR 172.101, Table Column 8C.	Emergency request to authorize the transportation of solid materials contaminated with or suspected of being contaminated with anthrax bacteria or spores in a bulk combination packaging. (mode 1)
EE 13043–N	DOT–E 13043	JCI Jones Chemicals, Inc., Beech Grove, IN.	49 CFR 172.301(c), 173.24(b), 179.300–12(b), 179.300–13(a), 179.300–14.	Request to transport a leaking ton container that has been fitted with a B kit to prevent leaking during transportation. (mode 1)
EE 13044–N	DOT–E 13044	Hawkins, Inc., Minneapolis, MN.	49 CFR 172.301(c), 173.34(d).	Request for an emergency exemption to transport a leaking ton cylinder that has been fitted an A kit. (mode 1)
EE 13045–N	DOT–E 13045	Department of State, Sterling, VA.	49 CFR 172.101, Table Column 8C.	Emergency request to authorize the transportation in commerce for disposal of solid materials contaminated with or suspected to be contaminated with anthrax bacteria or spores in alternative packaging. (mode 1).

DENIALS

7951–X	Request by Rod's Food Products City of Industry, CA to renew exemption authorizing the transport of an aerosol foodstuff in a nonrefillable metal container, complying with DOT Specification 2P with certain exceptions denied June 17, 2002 due to lack of response to a request for additional information.
8554–X	Request by M.J. Baxter Drilling Co. El Cajon, CA to renew exemption authorizing the transport of propellant explosives and blasting agents in DOT Specification MC–306, MC–307, and MC–312 cargo tanks denied June 17, 2002 due to lack of response to a request for additional information.
8627–X	Request by Process Chemicals, Inc. Odessa, TX to renew exemption authorizing the shipment of various Class 8 or Class 3 materials (oil well treating compounds) contained in six separate 60-gallon steel tanks firmly mounted on the chassis of a truck denied June 17, 2002 due to lack of response to a request for additional information.

DENIALS—Continued

10898–X	Request by Gulf Controls Corporations Tampa, FL to renew exemption authorizing the transportation of a Division 2.2 material (nitrogen) in diaphragm and bladder type accumulators denied June 17, 2002 due to lack of response to a request for additional information.
12928–N	Request by Pacer Global Logistics Dublin, OH to authorize the transportation in commerce of rail cars containing various hazardous materials to be transported with alternative shipping papers denied May 31, 2002.
12933–N	Request by In–X Corporation Denver, CO to authorize the transportation in commerce of a specially designed device equipped with a small cylindrical pressure vessel containing limited quantity of helium gas overpacked in cardboard containers denied April 3, 2002.
12967–N	Request by Reilly Industries, Inc. Indianapolis, IN to authorize the transportation in commerce of fused solid coal tar enamel in non-DOT specification open-top or closed-top sift proof metal packagings when the amounts meet or exceed the reportable quantity denied June 6, 2002.

[FR Doc. 02–19997 Filed 8–6–02; 8:45 am]

BILLING CODE 4909–60–M

DEPARTMENT OF THE TREASURY

Submission for OMB Review; Comment Request

July 31, 2002.

The Department of Treasury has submitted the following public information collection requirement(s) to OMB for review and clearance under the Paperwork Reduction Act of 1995, Public Law 104–13. Copies of the submission(s) may be obtained by calling the Treasury Bureau Clearance Officer listed. Comments regarding this information collection should be addressed to the OMB reviewer listed and to the Treasury Department Clearance Officer, Department of the Treasury, Room 2110, 1425 New York Avenue, NW., Washington, DC 20220.

DATES: Written comments should be received on or before September 6, 2002 to be assured of consideration.

Internal Revenue Service (IRS)

OMB Number: 1545–1790.

Regulation Project Number: REG–122564–02 NPRM and Temporary.

Type of Review: Extension.

Title: Carryback of Consolidated Net Operating Losses to Separate Return Years.

Description: Regulations 1.1502–21(b)(3)(ii)(C) provides taxpayers with an election to waive carryback years for certain consolidated net operating losses. To make the election, a taxpayer must attach to its return a statement prescribed by the regulation. The data will be used by Revenue Agents to ensure that taxpayers are preparing their returns in accordance with their elections. Respondents will be consolidated groups (generally not small taxpayers).

Respondents: Business or other for-profit.

Estimated Number of Respondents: 4,000.

Estimated Burden Hours Per Respondent: 15 minutes.

Frequency of Response: Annually.

Estimated Total Reporting Burden: 1,000 hours.

Clearance Officer: Glenn Kirkland, Internal Revenue Service, Room 6411–03, 1111 Constitution Avenue, NW., Washington, DC 20224, (202) 622–3428.

OMB Reviewer: Joseph F. Lackey, Jr., Office of Management and Budget, Room 10235, New Executive Office Building, Washington, DC 20503, (202) 395–7316.

Mary A. Able,

Departmental Reports Management Officer.

[FR Doc. 02–19944 Filed 8–6–02; 8:45 am]

BILLING CODE 4830–01–P

DEPARTMENT OF VETERANS AFFAIRS

[OMB Control No. 2900–0458]

Proposed Information Collection Activity: Proposed Collection; Comment Request

AGENCY: Veterans Benefits Administration, Department of Veterans Affairs.

ACTION: Notice.

SUMMARY: The Veterans Benefits Administration (VBA), Department of Veterans Affairs (VA), is announcing an opportunity for public comment on the proposed collection of certain information by the agency. Under the Paperwork Reduction Act (PRA) of 1995, Federal agencies are required to publish notice in the **Federal Register** concerning each proposed collection of information, including each proposed extension of a currently approved collection and allow 60 days for public comment in response to the notice. This notice solicits comments on the information needed to verify that a veteran's child between the ages of 18 and 23 years old is attending school.

DATES: Written comments and recommendations on the proposed collection of information should be received on or before October 7, 2002.

ADDRESSES: Submit written comments on the collection of information to Nancy J. Kessinger, Veterans Benefits Administration (20S52), Department of Veterans Affairs, 810 Vermont Avenue, NW., Washington, DC 20420 or e-mail: *irmnkess@vba.va.gov.* Please refer to ''OMB Control No. 2900–0458'' in any correspondence.

FOR FURTHER INFORMATION CONTACT: Nancy J. Kessinger at (202) 273–7079 or FAX (202) 275–5947.

SUPPLEMENTARY INFORMATION: Under the PRA of 1995 (Pub. L. 104–13; 44 U.S.C., 3501–3520), Federal agencies must obtain approval from the Office of Management and Budget (OMB) for each collection of information they conduct or sponsor. This request for comment is being made pursuant to Section 3506(c)(2)(A) of the PRA.

With respect to the following collection of information, VBA invites comments on: (1) Whether the proposed collection of information is necessary for the proper performance of VBA's functions, including whether the information will have practical utility; (2) the accuracy of VBA's estimate of the burden of the proposed collection of information; (3) ways to enhance the quality, utility, and clarity of the information to be collected; and (4) ways to minimize the burden of the collection of information on respondents, including through the use of automated collection techniques or the use of other forms of information technology.

Titles: Certification of School Attendance or Termination, VA Forms 21–8960 and 21–8960–1.

OMB Control Number: 2900–0458.

Type of Review: Extension of a currently approved collection.

Abstract: The information collected on the forms is necessary to determine continued eligibility for benefits for a child between the ages of 18 and 23 years old who is attending school.

Affected Public: Individuals or households.

Estimated Annual Burden: 11,667 hours.

Estimated Average Burden Per Respondent: 10 minutes.

Frequency of Response: Annually.

Estimated Number of Respondents: 70,000.

Dated: July 19, 2002.

By direction of the Secretary.

Genie McCully,

Acting Director, Information Management Service.

[FR Doc. 02–19947 Filed 8–6–02; 8:45 am]

BILLING CODE 8320–01–P

DEPARTMENT OF VETERANS AFFAIRS

[OMB Control No. 2900–New]

Agency Information Collection Activities Under OMB Review

AGENCY: Veterans Health Administration, Department of Veterans Affairs.

ACTION: Notice.

SUMMARY: In compliance with the Paperwork Reduction Act (PRA) of 1995 (44 U.S.C., 3501 *et seq.*), this notice announces that the Veterans Health Administration (VHA), Department of Veterans Affairs, has submitted the collection of information abstracted below to the Office of Management and Budget (OMB) for review and comment. The PRA submission describes the nature of the information collection and its expected cost and burden; it includes the actual data collection instrument.

DATES: Comments must be submitted on or before September 6, 2002.

FOR FURTHER INFORMATION OR A COPY OF THE SUBMISSION CONTACT: Denise McLamb, Information Management Service (045A4), Department of Veterans Affairs, 810 Vermont Avenue, NW., Washington, DC 20420, (202) 273–8030, FAX (202) 273–5981 or e-mail: *denise.mclamb@mail.va.gov.* Please refer to ''OMB Control No. 2900–New.''

Send comments and recommendations concerning any aspect of the information collection to VA's OMB Desk Officer, OMB Human Resources and Housing Branch, New Executive Office Building, Room 10235, Washington, DC 20503 (202) 395–7316. Please refer to ''OMB Control No. 2900–New'' in any correspondence.

SUPPLEMENTARY INFORMATION:

Titles:

a. Credentials Transfer Brief, VA Form 10–0376a.

b. Credentials Supplemental Questions, VA Form 10–0376b.

OMB Control Number: 2900–New.

Type of Review: New Collection.

Abstract: Currently VHA requires that credentialing occur prior to extension of initial employment offers to health care providers. The credentialing occurs upon employment, transfer, or at the time of initiating practice at a new site. Although credentialing may have been completed by one VHA facility, policy requires that the credentialing process be repeated by the receiving facility. VA Form 10–0376a improves the efficiencies of this process by facilitating the sharing of already verified health care provider's credential data between facilities and decreases the potential for duplication of efforts.

An agency may not conduct or sponsor, and a person is not required to respond to a collection of information unless it displays a currently valid OMB control number. The **Federal Register** Notice with a 60-day comment period soliciting comments on this collection of information was published on April 15, 2002, at pages 18306–18307.

Affected Public: Not-for-profit Institutions; Business or other; and State, Local or Tribal governments.

Estimated Annual Burden: 6,750 hours.

a. Credentials Transfer Brief, VA Form 10–0376a—500 hours.

b. Credentials Supplemental Questions, VA Form 10–0376b—6,250 hours.

Estimated Average Burden Per Respondent: 11 minutes.

a. Credentials Transfer Brief, VA Form 10–0376a—60 minutes.

b. Credentials Supplemental Questions, VA Form 10–0376b—15 minutes.

Frequency of Response: One time.

Estimated Number of Respondents: 25,500.

a. Credentials Transfer Brief, VA Form 10–0376a—500.

b. Credentials Supplemental Questions, VA Form 10–0376b–25,000.

Dated: July 25, 2002.

By Direction of the Secretary.

Genie McCully,

Acting Director, Information Management Service.

[FR Doc. 02–19948 Filed 8–6–02; 8:45 am]

BILLING CODE 8320–01–P

DEPARTMENT OF VETERANS AFFAIRS

[OMB Control No. 2900–NEW]

Agency Information Collection Activities Under OMB Review

AGENCY: Veterans Health Administration, Department of Veterans Affairs.

ACTION: Notice.

SUMMARY: In compliance with the Paperwork Reduction Act (PRA) of 1995 (44 U.S.C., 3501 *et seq.*), this notice announces that the Veterans Health Administration (VHA), Department of Veterans Affairs, has submitted the collection of information abstracted below to the Office of Management and Budget (OMB) for review and comment. The PRA submission describes the nature of the information collection and its expected cost and burden; it includes the actual data collection instrument.

DATES: Comments must be submitted on or before September 6, 2002.

FOR FURTHER INFORMATION OR A COPY OF THE SUBMISSION CONTACT: Denise McLamb, Information Management Service (045A4), Department of Veterans Affairs, 810 Vermont Avenue, NW., Washington, DC 20420, (202) 273–8030, FAX (202) 273–5981 or e-mail: *denise.mclamb@mail.va.gov.* Please refer to 2900–NEW.''

Send comments and recommendations concerning any aspect of the information collection to VA's OMB Desk Officer, OMB Human Resources and Housing Branch, New Executive Office Building, Room 10235, Washington, DC 20503 (202) 395–7316. Please refer to ''2900–NEW.''

SUPPLEMENTARY INFORMATION:

Title: Longitudinal Health Study of Persian Gulf War Veterans, VA Form 10–21055 (NR).

Type of Review: New collection.

Abstract: The Department of Veterans Affairs (VA) has designed a longitudinal study of Gulf War veterans to evaluate the health of veterans ten years after the Gulf War. The study will allow VA to monitor the health of veterans over time to determine the extent of the health problems among Gulf War veterans and whether health status of Gulf War veterans is better or worse than the health of veterans who were not deployed to the Gulf.

An agency may not conduct or sponsor, and a person is not required to respond to a collection of information unless it displays a currently valid OMB control number. The **Federal Register** Notice with a 60-day comment period soliciting comments on this collection

of information was published on April 29, 2002, at page 21017.

Affected Public: Individuals or households.

Estimated Annual Burden: 3,966 hours.

Estimated Average Burden Per Respondent: 30 minutes.

Frequency Of Response: Every three years.

Estimated Number Of Respondents: 7,933.

Dated: July 25, 2002.

By Direction of the Secretary.

Gene McCully,

Acting Director, Information Management Service.

[FR Doc. 02–19949 Filed 8–6–02; 8:45 am]

BILLING CODE 8320–01–M

Federal Register

Wednesday,
August 7, 2002

Part II

Department of the Interior

Bureau of Indian Affairs

25 CFR Part 170

Indian Reservation Roads Program; Proposed Rule

DEPARTMENT OF THE INTERIOR

Bureau of Indian Affairs

25 CFR Part 170

[Docket No. FHWA–2002–12229]

RIN 1076–AE17

Indian Reservation Roads Program

AGENCY: Bureau of Indian Affairs, Interior.

ACTION: Notice of proposed rulemaking.

SUMMARY: This proposed rule would establish policies and procedures governing the Indian Reservation Roads (IRR) Program. It expands transportation activities available to tribes and tribal organizations and provides guidance to tribes and tribal organizations for planning, designing, constructing, and maintaining transportation facilities. BIA also proposes a Tribal Transportation Allocation Methodology that includes a Relative Need Distribution Factor for allocating IRR Program funds based on the relative needs of Indian tribes, and reservation or tribal communities, for transportation assistance; and the relative administrative capacities of, and challenges faced by, various Indian tribes, including the cost of road construction in each Bureau of Indian Affairs area, geographic isolation, and difficulty in maintaining all-weather access to employment, commerce, health, safety, and educational resources.

DATES: Written comments are due on or before October 7, 2002. For dates of public information and education meetings, please see Supplementary Information.

ADDRESSES: Mail or hand deliver written comments to the docket number appearing at the top of this document to the U.S. Department of Transportation, Dockets Management Facility, Room PL–401, 400 Seventh Street, SW, Washington, DC 20590–0001 or submit electronically at *http://dms.dot.gov/submit*. All comments should include the docket number appearing in the heading of this document. In addition, as part of the Department's ongoing effort to reduce paperwork burdens, the Department invites the general public to take this opportunity to comment to OMB on the information collections contained in this proposed rulemaking, as required by the Paperwork Reduction Act. Such comments should be sent to the following address: Attention—Desk Officer for the Interior Department, Office of Information and Regulatory Affairs, Office of Management and Budget, 725 27th Street, NW., Washington, DC 20503. Please send a copy of these paperwork burdens comments to the Dockets Management Facility as noted above. All comments received will be available for examination and copying at the Dockets Management Facility between 9 a.m. and 5 p.m., ET, Monday through Friday, except Federal holidays. Those desiring notification of receipt of comments must include a self-addressed, stamped postcard, or you may print the acknowledgement page that appears after submitting comments electronically. For locations of public information meetings see the Supplementary Information section.

FOR FURTHER INFORMATION CONTACT: LeRoy Gishi, Chief, Division of Transportation, Bureau of Indian Affairs, 1849 C Street, NW., MS 4058 MIB, Washington, DC 20240, (202) 208–4359 between 8 a.m. to 5 p.m., EST, Monday through Friday, except Federal holidays.

SUPPLEMENTARY INFORMATION:

Electronic Access

Internet users may access all comments received by the U.S. DOT Dockets, Room PL–401, by using the universal resource locator (URL): *http://dms.dot.gov*. It is available 24 hours each day, 365 days each year. Please follow the instructions online for more information and help. An electronic copy of this document may be downloaded using a computer, modem, and suitable communications software from the Government Printing Office's Electronic Bulletin Board Service at (202) 512–1661. Internet users may reach the Office of the Federal Register's home page at: *http://www.archives.gov/federal_register* and the Government Printing Office's web site at: *http://www.access.gpo.gov/nara*.

I. Background

What Information Does This Section Address?

This section addresses:

—Public information and education meetings the Department will hold during the comment period;
—The Transportation Equity Act for the 21st Century (TEA–21), Public Law (Pub. L.) 105–178;
—The IRR Program;
—How the Secretary formed the TEA–21 Negotiated Rulemaking Committee (the Committee), who its members are, how the Committee operated, when the Committee met, and the Committee's process for developing the rule and the Tribal Transportation Allocation Methodology for distributing IRR Program funds;
—How funding for the IRR Program is currently distributed under the existing relative need formula; and
—Issues on which Federal and tribal negotiators were unable to agree.

What Public Information Meetings Are Scheduled To Explain This Rule?

We will hold a series of 12 public information and education meetings within the comment period for this notice of proposed rulemaking (NPRM) to explain the content of the NPRM, answer questions, and encourage written public comment. The meetings will be held at the locations listed below. Individuals wishing information, may contact the individual listed under the caption **FOR FURTHER INFORMATION CONTACT**.

The purpose of the public information and education meetings is to present the proposed rule and the proposed funding methodology. They are not public hearings. The meetings will include brief presentations by members of the TEA–21 Negotiated Rulemaking Committee on the content of the NPRM and the Tribal Transportation Allocation Methodology, including the Relative Need Distribution Factor for distributing IRR Program funds, and a period for clarifying questions. Attendees wishing to express comments on the content of the proposed rule should direct those comments to the address listed under the caption **ADDRESSES.**

The meeting sites and dates are:

Location	Dates
Minneapolis, Minnesota.	September 25, 2002.
Nashville, Tennessee	September 27, 2002.
Rapid City, South Dakota.	August 20, 2002.
Billings, Montana	August 22, 2002.
Las Vegas, Nevada ..	August 27, 2002.
Sacramento, California.	August 29, 2002.
Gallup, New Mexico	September 4, 2002.
Santa Fe, New Mexico.	September 6, 2002.
Anchorage, Alaska ...	September 10, 2002.
Portland, Oregon	September 12, 2002.
Tulsa, Oklahoma	September 17, 2002.
Oklahoma City, Oklahoma.	September 19, 2002.

How Will the Public Education and Information Meetings Be Conducted?

Each meeting will be conducted by a facilitator with tribal Committee members presenting the proposed rule and the proposed funding methodology. There will be periods for questions and answers. Each meeting will be held from

8 a.m. to 5 p.m., local time. The agenda for the meetings is:

Agenda for Information and Education Meetings (all times local)

8–8:30 a.m. Introduction (Meeting format)
8:30–8:45 a.m. Overview of the Negotiated Rulemaking Process
8:45–9:15 a.m. Explanation of NPRM—Preamble, Table of Contents, Parts
9:15–9:30 a.m. Break
9:30–12 noon Explanation and Clarification of Published Proposed Rule
12–1 p.m. Lunch Break
1–1:30 p.m. Overview of Tribal Transportation Allocation Methodology (TTAM) (funding)
1:30–3 p.m. Explanation and Clarification of TTAM (funding)
3–3:15 p.m. Break
3:15–5 p.m. (Continued) Explanation and Clarification of TTAM (funding)

What Is the Transportation Equity Act for the 21st Century?

The Transportation Equity Act for the 21st Century (TEA–21), Pub. L. 105–178, 112 Stat.107, signed into law in 1998, is a broad-based statute that authorizes and expands the use of Federal Highway Trust funds through fiscal year 2003. Several provisions of TEA–21 directly affect the Indian Reservation Roads (IRR) program. TEA–21:

• Authorizes $1.6 billion for the IRR Program for fiscal years 1998–2003;

• Provides for use of the Indian Self-Determination and Education Assistance Act (the ISDEAA), Public Law 93–638, as amended, by tribes to contract IRR projects; and

• Establishes the Indian Reservation Roads Bridge Program (IRRBP), codified at 23 U.S.C. 202(d)(c).

A minimum of $13 million of IRR funds is set aside for a nationwide priority program for improving deficient IRR bridges. On July 19, 1999, the Secretary of Transportation issued an interim final rule for the IRR bridge program, now found at 23 CFR 661.

What Is the Indian Reservation Roads Program?

The Indian Reservation Roads (IRR) Program is a program of eligible transportation projects authorized under 23 U.S.C. 204. The program is jointly administered by BIA and FHWA's Federal Lands Highway Core Business Unit. The duties and responsibilities of BIA and FHWA are described in a Memorandum of Agreement between the two agencies which can be found at the section on joint administration. The IRR Program was established on May 26, 1928, by Pub. L. 520, 25 U.S.C. 318(a). It authorized the Secretary of Agriculture (which had responsibility for Federal roads at that time) to cooperate with state highway agencies and the Department of the Interior to survey, construct, reconstruct, and maintain Indian reservation roads serving Indian lands.

In 1982, under the Surface Transportation Assistance Act of 1982 (STAA), Pub. L. 97–424, Congress created the Federal Lands Highway Program (FLHP). This coordinated program addresses access needs to and within Indian and other Federal lands. The IRR Program is a funding category of this program. STAA expanded the IRR system to include tribally-owned public roads as well as state and county-owned roads.

Each fiscal year FHWA determines the amount of funds available for construction. BIA works with tribal governments and tribal organizations to develop an annual priority program of construction projects which is submitted to FHWA for approval based on available funding. FHWA allocates funds to BIA which distributes them to IRR projects on or near Indian reservations according to the annual approved priority program of projects. BIA distributes funds using the relative need formula. This formula addresses the allocation of funds to reflect the cost to improve roads to an adequate standard, measure the relative importance of road usage, and measure the socio-economic needs to be served by new transportation facilities.

What Is the Purpose of the IRR Program?

The purpose of the IRR Program is to provide safe and adequate transportation and public road access to and within Indian reservations, Indian lands, and communities for Indians and Alaska Natives, visitors, recreational users, resource users, and others, while contributing to economic development, self-determination, and employment of Indians and Alaska Natives. As of October 2000, the IRR system consisted of approximately 25,700 miles of BIA and tribally-owned public roads and 25,600 miles of state, county, and local government public roads.

How Do BIA and FHWA Jointly Administer Statutory Requirements for the IRR Program?

The Federal-Aid Highway Act of 1944, Pub. L. 521, 58 Stat. 838, Section 10(c) required the Public Roads Administration to approve the location, type, and design of all IRR roads and bridges before any expenditures were made and generally supervise all such construction. In 1946, the predecessor agencies of BIA and FHWA (the Office of Indian Affairs and the Public Roads Administration, then in the Department of Commerce, respectively), entered into their first agreement to jointly administer statutory requirements for the IRR Program. Since that time, there have been other interagency agreements to carry out FHWA and BIA duties and responsibilities under 23 U.S.C. 208.

In 1973, BIA and FHWA entered into an agreement for an ''Indian Roads Needs Study''; FHWA was to assist BIA in identifying roads that were at that time, or that should have been, included, as BIA's responsibility. In 1974, BIA and FHWA entered into two separate agreements which set out the joint and individual statutory responsibilities of FHWA and BIA for constructing and improving Indian reservation roads and bridges. The intent of both agreements was to establish a Federal-aid Indian road system consisting of public Indian reservation roads and bridges for which no other Federal-aid funds were available. Both BIA and FHWA jointly designated those roads and, under 23 U.S.C. 208, FHWA was responsible for approving the location, type, and design of IRR and bridge projects and supervising construction of these projects. At that time, IRR projects were authorized under the Federal-Aid Highway Act and under 23 U.S.C. 208, but they were constructed with Department of the Interior appropriations.

In 1979, BIA and FHWA entered into another agreement which explicitly recognized the role of individual tribes in defining overall transportation needs. This agreement provided that the Indian road system was to consist of:

[t]hose Indian reservations roads and bridges which are important to overall public transportation needs of the reservations as recommended by the tribal governing body. These are public roads for which BIA has primary responsibility for maintenance and improvement. Roads included on the Indian Road System shall not be on any Federal-aid system for which financial aid is available under 23 U.S.C. 104.

After STAA's enactment, BIA and FHWA entered into a new 1983 Memorandum of Agreement that set forth the respective duties and responsibilities of each agency for the IRR Program. Under the interagency agreement, BIA, working with each tribe, was to develop an annual priority program of construction projects and submit the annual priority program to FHWA for review, concurrence, and

allocation of funds. This 1983 agreement also specifically referenced the Buy Indian Act of June 25, 1910, 36 Stat. 891 (see also 25 U.S.C. 13) in response to 23 U.S.C. 204(e) which provided an exemption, if in the public interest, to the competitive bidding requirements of Title 23 with respect to all funds appropriated for the construction and improvements of IRRs that the Secretary administers. The 1983 interagency agreement also recognized that, although FHWA's assistance and oversight would continue, both FHWA and BIA would be responsible for the implementation and success of the IRR Program. As a result of section 1028 of ISTEA, which provided for the Highway Bridge Replacement and Rehabilitation Program, BIA and FHWA amended their 1983 agreement to provide for their respective responsibilities for that program.

Why Did the Secretary Enter Into Negotiated Rulemaking With Indian Tribal Governments?

TEA–21, Section 1115(b), mandates that the Federal Government (with representatives from the Department of the Interior and the Department of Transportation) enter into negotiated rulemaking with tribal governments to develop IRR Program procedures and a funding formula to allocate IRR funds. This rule was negotiated under the provisions of 5 U.S.C. 561.

What Is the Purpose of the TEA–21 Negotiated Rulemaking Committee?

The purpose of the TEA–21 Negotiated Rulemaking Committee is to negotiate and develop proposed regulations for the IRR Program to implement the applicable portions of TEA–21 and to establish a funding formula for fiscal year 2000 and each subsequent year based on factors that reflect:

- The relative needs of the Indian tribes, and reservations or tribal communities, for transportation assistance; and
- The relative administrative capacities of, and challenges faced by, various Indian tribes, including the cost of road construction in each Bureau of Indian Affairs area, geographic isolation and difficulty in maintaining all-weather access to employment, commerce, health, safety, and educational resources. (TEA–21, Pub. L 105–178, Section 1115(b)).

How Did the Secretary of the Interior Inform the Public About the TEA–21 Negotiated Rulemaking Process?

The Secretary published a **Federal Register** ''Notice of Public Meeting'' on October 30, 1998 (63 FR 58413). The Secretary held a national informational meeting for tribal governments, tribal organizations, individual tribal members, and the public to share information about the regulatory negotiation process for the IRR Program under TEA–21 on November 16, 1998, in Albuquerque, New Mexico. On December 17, 1998, the Secretary published a **Federal Register** ''Notice of Intent to Form a Negotiated Rulemaking Committee and Accept Applications for Membership'' (63 FR 69580). On February 11, 1999, the Secretary published a **Federal Register** notice proposing the members of the TEA–21 Negotiated Rulemaking Committee (Committee)(64 FR 6825). The Committee's meeting schedule was published on the IRR web site at *http://www.irr.bia.gov.* BIA produced a periodical newsletter that was published on the web site and was mailed to all primary and alternate Committee representatives. In addition, there were periodic mailings to all tribal leaders of federally recognized tribes. All full Committee and work group meetings were open to the public and the Committee accepted oral and written comments at each meeting. The Committee met in different geographical areas of the United States so that Indian tribes and tribal organizations could participate in the meetings and provide their comments for the record.

How Was the TEA–21 Negotiated Rulemaking Committee Formed?

The Secretary was required by 23 U.S.C. 202, as amended by TEA–21, to develop regulations and establish a funding formula for allocating IRR funds among Indian tribes using a negotiated rulemaking process. Section 202 also required the Secretary to:

- Apply the procedures of negotiated rulemaking under 5 U.S.C. 561 *et seq.* (the Negotiated Rulemaking Act of 1990), in a manner that reflects the unique government-to-government relationship between Indian tribes and the United States; and
- Ensure that the membership of the Committee includes only representatives of the Federal Government (the Department of the Interior and the Department of Transportation) and of geographically diverse small, medium, and large tribes.

In the **Federal Register** notice of December 17,1998 (63 FR 69580), the Secretary requested nominations for committee representatives from tribes in each of the 12 BIA regions. In addition, the Secretary invited other interested, qualified persons to apply. The Secretary encouraged tribes to nominate representatives and alternates who were members of geographically diverse direct service, self-determination, and self-governance tribes, as well as members of tribes who had varying levels and types of experience in transportation development and management. Each of the 12 BIA regions were also invited to nominate 2 representatives and 2 alternates to serve on the committee.

After reviewing the nominations, the Secretary appointed 2 primary tribal representatives and 2 alternate tribal representatives from each of the 12 BIA regions. In addition, the Secretary added five additional primary tribal committee representatives from regions that were considered under-represented in order to meet the statutory requirements for adequate representation of small, medium, and large tribes. On February 11, 1999, the Secretary published a **Federal Register** ''Notice of the Proposed Membership of the Negotiated Rulemaking Committee'' under Section 1115 of TEA–21 (64 FR 6825). After the Secretary received and reviewed comments, the representatives named in the notice were appointed to the Committee.

The Committee membership reflected balanced interests by including: (1) Members of geographically diverse small, medium, and large tribes; (2) members of tribes identified as direct service, self-governance, and self-determination; and (3) members of tribes with experience in many areas of transportation development and management (*e.g.,* jurisdictional issues, complexity of transportation systems, climatic concerns, environmental factors, geographic isolation, *etc.*). The Secretary appointed 10 Federal representatives from the Bureau of Indian Affairs (BIA) (the Department of the Interior) and 3 Federal representatives from the Federal Highway Administration (FHWA) (the Department of Transportation). The Committee has a total of 42 primary representatives—29 primary tribal representatives and 13 primary Federal representatives. The Secretary also appointed two alternates for each of the primary tribal representatives. The Secretary appointed the BIA Regional Director from the Southwest Regional Office as the Designated Federal Official.

How Does the Committee Operate?

The Committee operates under a set of written rules called protocols that the Committee developed. In the protocols, the Committee agreed to procedures for conducting meetings, to dates and locations of meetings, and to operate

based on consensus decision-making. Four tribal representatives and three Federal representatives, chosen by their respective caucuses, chaired the full Committee meetings.

The Committee identified over 117 issues with over 422 questions and answers for consideration. The Committee established four work groups to address identified subject matter areas of the IRR Program. Each work group chose a tribal representative to chair the work group. The work groups considered matters that addressed: (1) Funding formula, (2) policy, (3) delivery of services, and (4) technical standards. Tribal and federal resource persons who were not Committee members also assisted the work groups. The four work groups reviewed and researched issues and, where appropriate, drafted regulations in question and answer form. Each work group made recommendations to the full Committee on whether and how each issue should be addressed in the proposed regulations. Each work group presented its draft questions and answers to the full Committee for approval. The tribal and federal caucuses separately reviewed all proposed questions and answers and each caucus commented to the other on all proposed questions and answers. The full Committee considered the caucuses' comments. If the questions and answers needed further negotiation or consideration, a small group of tribal and federal members met to discuss them and work toward agreement. The small groups then presented their recommendations to the respective caucuses which made their recommendations to the full Committee. When the full Committee agreed on the questions and answers, approval was by consensus. All consensus items which were made a part of the official record are contained in the Committee's Documents 1–15. Consensus items were distributed to all Committee members and posted on the IRR web site for TEA–21.

When Did the TEA–21 Committee Meet?

The TEA–21 Committee held its first meeting March 16–18, 1999, in Albuquerque, New Mexico. The Committee decided that it would meet in various locations across the country to allow tribal representatives and individuals to present comments to the Committee and participate in full Committee and work group discussions. Between March 1999 and the last meeting November 27–December 1, 2000, the full Committee met 23 times at the following locations: Albuquerque, New Mexico; Portland, Oregon; Washington, DC; Sacramento, California; Anchorage, Alaska; Tulsa, Oklahoma; Ft. Yates, North Dakota; Phoenix, Arizona; Green Bay, Wisconsin; Minneapolis, Minnesota; Denver, Colorado; and San Diego, California. The four committee work groups met separately during full Committee meetings and at different times and locations.

How Will the TEA–21 Committee Handle Written Public Comments?

The Committee will review and consider all comments received within the comment period for this rule. To the extent practicable, the Committee will consider comments received after the comment closing date. It will make recommendations on the comments to the Secretary for the final rule.

How Is the IRR Program Funded?

From the DOT appropriation, FHWA reserves up to 1.5 percent for its administration and oversight of the IRR Program. Together BIA and FHWA develop a plan for using the remaining funds. This plan includes program management funds for BIA (up to 6 percent is authorized in the annual DOI Appropriations Act). Up to 2 percent of IRR Program funds are set aside for transportation planning by tribal governments.

What Is the Existing ''Relative Need Formula'' (RNF)?

The existing relative need formula is a mathematical calculation based on factors reflecting the cost to improve eligible IRR's, vehicle miles traveled, and population of federally-recognized tribes. As provided for in the 1982 Surface Transportation Assistance Act (STAA), BIA developed and FHWA approved the RNF to provide an acceptable method to compute the relative needs of the various Indian reservations for the distribution of Highway Trust Funds among all federally recognized Indian tribes.

What Is the History of the Existing Relative Need Formula?

On January 6, 1983, the STAA provided Highway Trust Funds for road construction on Indian reservations. Section 126 of the STAA required the Secretary of Transportation to allocate Highway Trust Funds for improvement of Indian Reservation Roads (IRR) according to the relative needs of the various reservations.

In 1983, BIA began a planning process to determine the relative need for roads on the various reservations and to develop transportation plans for Indian reservations. In 1988, BIA undertook a national relative need study. From January 1988 to May 1989, an independent Indian consulting firm conducted a study under the guidance of BIA. The result of the study was a proposed Relative Need Formula. This proposed Relative Need Formula was made available to all tribes for review and comment over a period of 2 years. A final review of the existing Relative Need Formula was conducted in 1992 and the Deputy Commissioner of Indian Affairs and the FHWA approved the existing relative need funding formula. In January 1993, BIA began implementing the RNF over a 4-year transition period.

What Is the Definition of ''Relative Need'' With Respect to Indian Reservation Roads?

''Relative Need'' is a ranked series of road and bridge improvements (by estimated cost) required to bring the IRR system from its existing condition to an adequate safe standard. When applied to individual Indian reservations it is a ranked series of road improvements (by estimated cost) required to bring roads and bridges that are located within or provide access to an Indian reservation to an adequate safe standard.

Does the Existing Relative Need Formula Need To Be Used To Compute Percentages of Highway Trust Funds for Allocation to Indian Tribes?

The existing Relative Need Formula is used to compute percentages of Highway Trust Funds for allocation to Indian tribes because there is a legislative requirement as follows.

''On October 1 of each fiscal year, the Secretary [of Transportation] shall allocate the sums authorized to be appropriated for such fiscal year for Indian Reservation Roads according to the relative need of the various reservations as jointly identified by the Secretary [of Transportation] and the Secretary of the Interior.'' 23 U.S.C. § 202(e).

What Does the Existing Relative Need Formula Look Like?

The following is the final version of the existing Relative Need Formula:

$$A = 0.5 \times (CI \div \text{Total } CI) + 0.3 \times (VMT \div \text{Total } VMT) + 0.20 \times (POP \div \text{Total } POP)$$

Where:

A = Percent of Relative Need for an individual tribe

CI = Total cost to improve for an individual tribe

VMT = Total vehicle miles traveled for an individual tribe

POP = Total population for an individual tribe

Total CI = Total cost to improve for all tribes
Total VMT = Total vehicle miles traveled for all tribes
Total POP = Total population for all tribes
0.50, 0.30, 0.20 = Coefficients reflecting relative importance given to each formula factor

Example:
Tribe X has:
CI = $51,583,000
Total CI = $4,820,399,000
VMT = 45,680
Total VMT = 7,929,653
POP = 4,637
Total POP = 1,183,967
A = 0.00535 + 0.00173 + 0.00078
A = 0.00786 or 0.786 percent

If Construction Funds available for the fiscal year are $160,000,000
Then: Tribe X distribution would be:
$160,000,000 × 0.00786 = $1,257,600

How Is the Cost To Improve (CI) Computed?

The data needed to compute the CI is taken from road inventories performed by tribes under the Indian Self-Determination and Education Assistance Act (Pub. L. 93–638) contracts and by BIA. The road inventory includes attributes on individual road standards commonly found on reservations. In addition to the inventory, BIA regions supply cost tables identifying estimated costs for constructing a mile of road, in terms of four key road construction estimating items added to each specified standard, including grade and drain, gravel construction, pavement construction and incidental construction. Several other inventory attributes are then used to approximate the existing condition of the road or section of road in terms of the four key road construction-estimating items. Utilizing the cost per mile estimate tables submitted by BIA Regions, the cost for improving an existing road, or section of road, from its existing condition to its identified adequate road standard is computed. Once all of the computations are made for all roads or road sections needing improvement within each reservation, all costs are added up. BIA then uses the results in the Relative Need Formula.

How Is the VMT Acquired?

The road inventory data base includes existing average daily traffic (ADT) and/or projected 20-year ADT for each road or section of road which is eligible and designated for improvement. The length of road, or section of road, is also included in the inventory data base. The vehicle miles traveled (VMT) for each road, or section of road, to be improved is then computed by multiplying the 20-year projected ADT by the length of road or section of road. The VMTs for each road or section of road are then added up and the totals used in the Relative Need Formula.

How Is the Population Data Acquired?

BIA currently acquires the population data for each reservation from the Indian Service Population and Labor Force Estimates published by the U.S. Department of the Interior, Bureau of Indian Affairs.

What Is the Significance of the Coefficients 0.50, 0.30, and 0.20 That Are Used in the Current Relative Need Formula?

The coefficients used in the formula reflect the relative importance given to each factor. The size of the coefficient is justified on the following grounds:

- Cost to improve is the most important factor and is the primary basis for determining Relative Need. It is given the weight of 0.50 (50 percent).
- Benefits received from a road improvement are generally measured in terms of usage or VMT. This factor is important, but not as significant as cost in determining need. It is given the weight of 0.30 (30 percent).
- Population, in itself, is not an overwhelming indicator of the need for road improvements. It is given a weight of 0.20 (20 percent).

Which Roads Are Included in the Cost To Improve Calculations?

Existing or proposed roads in the BIA system which are considered to have a construction need by Indian tribes are included in the cost to improve calculations. Tribes must adhere to certain guidelines in the selection of those roads. The roads must:

- Be on the Indian Reservation Road system;
- Not belong to or be the responsibility of other governments (i.e., States or counties);
- Be within or provide access to reservations, groups, villages and communities in which the majority of the residents are Indian; and
- Be vital to the economic development of Indian tribes.

These roads are also identified by construction need (CN) in the road inventory which is performed for each reservation. Currently only the roads with a construction need category of 1 and 4 are included in the cost to improve calculations. These are defined as follows:

Construction Need 1 (CN1): Existing roads needing improvement.

Construction Need 4 (CN4): Roads which do not currently exist and need to be constructed (proposed roads).

What Is the Construction Need of Completed Road Improvements?

Roads or sections of roads which have been improved to their acceptable standard(s) are classified in the road inventory as construction need of 3 (CN3) roads or construction need of 0 (CN0) roads. CN3 roads or sections of roads are roads for which no further improvements are planned. Roads or sections of roads which have been improved to their acceptable standard but future improvements are anticipated, should be classified as CN0 until further improvements are needed due to deterioration based on age or increased traffic volumes. While classified as CN3 or CN0, roads are not included in the cost to improve calculations.

Why Is it Important To Have a Road Inventory That Is Accurate and Current?

Much of the data needed to compute the cost to improve and the VMT comes from the road inventory. If the data from the inventory is not accurate and current the true Relative Need for each tribe cannot be computed accurately. The inventory should be updated anytime a road is improved or added to the inventory. The inventory should also be updated periodically because deterioration of roads may occur and the cost to improve to the acceptable standard then increases. This would also indicate the true Relative Need.

What Is Being Done To Assure That the Data Used in the Relative Need Formula Is Uniform, Accurate, and Consistent?

The nationwide road inventory system, including all reservations, is continuously updated. This inventory is used to determine the relative condition of the road system for each reservation. The data is also used to compute the relative ''cost to improve'' roads on each reservation to an adequate safe standard. The cost to improve data is used together with the road usage (VMT) and Indian Population data to determine the latest ''Relative Need'' of each reservation. The new inventory is updated when a road is improved, when a new road is added to the inventory or when a road deteriorates to the point when it needs to be improved.

What Is the Proposed Method of Distributing IRR Program Construction Funds?

The Tribal Caucus of the TEA–21 Negotiated Rulemaking Committee developed the Tribal Transportation

Allocation Methodology (TTAM) as a consensus compromise.

1. TTAM distributes IRR Program construction funds as follows:

• *2% Transportation Planning Funds.* It continues to provide for 2% Transportation Planning Funds.

TTAM introduces 2 new concepts:

• *IRR High Priority Project Program (IRRHPP).* It creates a national funding pool for IRRHPP using 5% of IRR Program construction funds.

This pool will be available on an application basis for tribal projects needed for emergencies or disasters, or for tribes whose funding allocation under the formula is insufficient to build their highest priority project. IRRHPP projects must be IRR eligible and may not exceed $1 million. If Congress increases appropriations for the IRR Program above the current level of $275 million, 12.5% of the increase, after takedowns, will be added to the IRRHPP funding pool; and

• *Population Adjustment Factor (PAF) allocation.* If Congress increases appropriations for the IRR Program above the current level of $275 million, 12.5% of the increase, after takedowns, will be used for a new small minimum allocation, PAF, for all tribes based on population ranges. PAF addresses the relative administrative capacities of tribes by taking into account the fact that all tribes participating in the IRR program necessarily incur some costs. As a practical matter, any participating tribe must undertake activities such as inventory development, planning, inter-governmental coordination, and maintaining management systems. The PAF component ensures that all tribes have a small but meaningful amount of funds for these activities. By delaying the PAF until there are appropriations increases, the TTAM minimizes the negative impact on large tribes.

2. TTAM establishes a Relative Need Distribution Factor:

• *The Relative Need Distribution Factor.* The remainder of IRR Program construction funds (after 2% for Transportation Planning and 5% for IRRHPP) will be allocated by the following formula:

50% Cost-to-Construct (CTC) + 30% Vehicle Miles Traveled (VMT) + 20% Population (POP).

These are the same formula factors and the same percentage allocations as under the existing BIA Relative Need Formula, but some changes have been made in the definitions and data used for each. TTAM includes technical improvements in the way the Relative Need Distribution Factor data is collected, applied, and administered which will make it easier for all tribes to participate in the IRR Program.

How Is Cost-to-Construct (CTC) Calculated in the Relative Need Distribution Factor?

The largest component of the TTAM (50%) is CTC, a factor which measures the need for construction funds for tribally-identified projects and, thus, the relative need of tribes for transportation assistance. CTC in TTAM will be derived from an expanded inventory that will include all IRR-eligible transportation projects. TTAM provides guidelines for future improvements in the cost methodology for the Relative Need Distribution Factor. Until this revised method is completed, the Relative Need Distribution Factor uses the ''Simplified Approach to Cost to Construct'' in Appendix C to Subpart C. By expanding the inventory for funding purposes to include all IRR-eligible projects, the Relative Need Distribution Factor of TTAM will result in a more complete accounting of tribal transportation needs. It will also ensure that IRR Program funding is spent on projects that generate funding in the Relative Need Distribution Factor, and thereby remove completed projects from the funding system. In contrast, under the existing Relative Need Formula, cost to improve funding was generated only by BIA system routes, but could be expended on other IRR-eligible projects.

How Is the Vehicle Miles Traveled (VMT) calculated in the Relative Need Distribution Factor?

VMT (30%) is a factor measuring transportation facility usage and includes the need to maintain and improve the existing transportation infrastructure. The Relative Need Distribution Factor uses the same methodology for computing VMT as the existing relative need formula, except that it is computed from current Average Daily Traffic (ADT) counts rather than the projected 20-year ADT.

How Is Population (POP) Calculated in the Relative Need Distribution Factor?

POP (20%) is a factor that is one indicator of transportation needs. The data used for population will be the tribal service population taken from the BIA Labor Force Report, until such time as the Native American Housing Assistance and Self-Determination Act (''NAHASDA'') American Indian and Alaska Native service population data is adjusted to include 2000 Federal census data. At that time, the NAHASDA service population will be used. The NAHASDA service population is developed by the Department of Housing and Urban Development pursuant to the Native American Housing Assistance and Self-Determination Act.

Why Did the Tribal Caucus Develop TTAM?

The Tribal Caucus developed TTAM to reflect Congress's intent expressed in TEA–21 that the funding distribution method balance the interests of all tribes and enable all tribes to participate in the IRR Program. Other guiding principles the Tribal Caucus used to develop the TTAM were:

• Avoiding major percentage reductions of funds from particular tribes;

• Allowing tribes to identify their true transportation needs;

• Correcting technical problems with the existing Relative Need Formula; and

• Devising a system that is accurate, verifiable, and uniformly applied.

The overall effect of the TTAM is to make it easier for small tribes to participate in the program, without making major reallocations of funds from larger tribes.

Why Did the Tribal Caucus Change the Existing Relative Need Formula to the Relative Need Distribution Factor?

The BIA's prior relative need formula was criticized by smaller and historically underserved tribes for allocating funds primarily from an inventory of roads BIA built in the past and still owns. By driving funding primarily from an inventory of BIA system roads, the existing RNF tended to direct funds to tribes according to their past participation in the program, leaving many tribes out. Further, tribes that generate a small share under the formula have had difficulty accessing any construction funds at all, since a road construction project typically costs more than a small tribe's entire allocation under the formula. On the other hand, many other tribes believe BIA's existing relative need formula serves their needs and requires only technical improvements to ensure that it is accurately and uniformly applied.

How Is the IRR Inventory Used in the Relative Need Distribution Factor?

The inventory used in the Relative Need Distribution Factor will be expanded to include tribally-owned public roads and other IRR-eligible transportation facilities identified by tribes to more accurately measure transportation assistance needs and to match the projects on which IRR Program funding is spent. Other improvements will be made in the way

the formula components are calculated and applied.

What Are Other Features of the New Relative Need Distribution Factor?

- It bases the inventory used for funding purposes on the needs of tribes as identified through long-range transportation planning.
- It allows the inclusion of all IRR-eligible facilities in the inventory, but gives greater weight to BIA and tribally-owned public facilities by limiting, for Relative Need Distribution Factor purposes, most other IRR-eligible facilities to the amount of local matching funds needed for the project.
- It provides that construction cost data be derived from an average of local tribal costs, state cost data from the tribe's area, and national tribal cost averages .

How Does the Relative Need Distribution Factor Meet the Needs of Small, Medium, and Large Tribes?

The Relative Need Distribution Factor will broaden tribal participation in the IRR Program. By expanding the inventory to include all IRR-eligible projects, the Relative Need Distribution Factor will benefit all tribes by allowing all of their actual IRR transportation needs to be counted for funding purposes. The Relative Need Distribution Factor improves the accuracy and uniformity of the data by using state and national average construction cost data in addition to self-reported costs. Various other improvements are made in the management and processing of the data.

How Does the Relative Need Distribution Factor Comply With Congressional Intent?

TEA–21, at 23 U.S.C. 202(d)(2)(D), required that the funding distribution method be based on factors that reflect:

- The relative needs of the Indian tribes, and reservation or tribal communities, for transportation assistance; and
- The relative administrative capacities of, and challenges faced by, various Indian tribes, including the cost of road construction in each Bureau of Indian Affairs area, geographic isolation and difficulty in maintaining all-weather access to employment, commerce, health, safety, and educational resources.

Relative Need of Indian Tribes for Transportation Assistance. The Relative Need Distribution Factor and inventory system address the relative need of all tribes for transportation assistance by setting up a tribally-driven process for developing and maintaining the inventory data from which funding is calculated. It provides for a full accounting of tribal transportation needs. In the existing relative need formula cost to improve funding was generated only by BIA system routes, but all IRR roads designated as construction need 1 (CN1) and 4 (CN4) compute a need based on VMT. The Relative Need Distribution Factor continues the practice of the existing formula using Population and VMT factors to allocate funds based on road use and population.

Relative Administrative Capacities of Indian Tribes. The Relative Need Distribution Factor recognizes that all tribes participating in the IRR Program necessarily incur some costs, such as the cost of planning, developing the inventory, and interacting with other government agencies. For this reason, 12.5% of future funding increases will be allocated by the Population Adjustment Factor so that all tribes receive at least some funding. The existing 2% Transportation Planning program is continued. Finally, the interim funding allocations used in FY 2000, 2001, and 2002 provided per tribe allocations to enable tribes to do administrative and planning work necessary to participate in the IRR Program.

Cost of Road Construction. Tribal construction costs will continue to drive 50% of the funding allocation.

Geographic Isolation. The difficulties caused by geographic isolation are addressed in the Cost-to-Construct factor of the Relative Need Distribution Factor because geographic isolation (location) is the biggest variable in determining construction costs. The Relative Need Distribution Factor uses an average of local tribal costs, local state costs, and national average tribal costs in applying the Construction Cost factor, and thus takes into account the geographic differences between the tribes.

Difficulty in Maintaining All-Weather Access. This factor will be addressed by the tribes themselves as they add projects they believe are important to the inventory. It is also addressed in the ranking system for the new IRRHPP program, where projects that address these particular needs score higher.

II. Summary of Regulations

Subpart A—General Provisions and Definitions

This subpart outlines the authority under which this rule is established. The purpose and scope of this rule is defined with respect to 23 U.S.C. 202(d) and 204 and the IRR Program. This subpart provides interpretation of the language used throughout 23 U.S.C. 202(d) and (204).

The subpart further outlines the policies, guidance manuals, directives, and procedures that will govern the IRR Program under direct service, self-determination contracts, and self-governance agreements. It also includes definitions used throughout the rule.

Subpart B—Indian Reservation Roads Program Policy and Eligibility

This subpart:

- Explains the Federal, tribal, state, and local governments' coordination, collaboration, and consultation responsibilities; and
- How these efforts can effectively assist the tribal governments in meeting their transportation needs.
- Lists activities eligible for IRR funding; and
- Lists activities not eligible for IRR funding.
- Discusses the use of all eligible Indian Reservations Roads; and
- Other transportation facilities eligible for construction, including cultural access roads, housing access roads, toll roads, recreation, tourism, trails, airport access roads, transit facilities, and seasonal transportation routes authorized under 23 U.S.C. 204(j).
- Covers the highway safety aspects of the IRR Program; and
- Those activities, functions, and equipment that may be eligible for funding under this program; and
- The formation of an IRR Coordinating Committee to make recommendations to help meet program objectives.
- Local Technical Assistance Programs available to BIA and tribes performing activities under the IRR Program.

This subpart also includes:

- Transportation research activities;
- Education and training opportunities available to tribes and BIA through Local Technical Assistance Programs and other federal, state, and local organizations; and
- How IRR Program funds may be used for education and training.

Subpart C—Indian Reservation Roads Program Funding

This subpart covers the Tribal Transportation Allocation Methodology and includes a Relative Need Distribution Factor to distribute IRR Program funds. It includes:

- Allocation of IRR Program Funds (overview);
- 2% Transportation Planning Program;

• Relative Need Distribution Factor for IRR Construction;
• IRR High Priority Projects Program (IRRHPP);
• Population Adjustment Factor (PAF); and
• Relative Need Distribution Factor.

It covers the following factors used in the Relative Need Distribution Factor:
• Cost-to-Construct;
• Vehicle Miles Traveled; and
• Population.

This subpart also includes:
• General Data Appeals;
• IRR Inventory; and
• Long-Range Transportation Planning.

Subpart D—Planning, Design, and Construction of Indian Reservation Roads Program Facilities

This subpart discusses:
• The transportation planning responsibilities and requirements consistent with 23 U.S.C. 134 and 135 and funding for transportation planning;
• The requirements for developing a Transportation Improvement Program and long-range plans; and
• The requirements for public hearings in the development of IRR TIPs.

This subpart also:
• Defines the IRR inventory and transportation classifications;
• Discusses how the IRR Inventory is developed and used;
• Discusses components of the IRR Inventory;
• Includes the environmental and archaeological requirements that apply to projects under this program;
• Covers whether IRR Program funds can be used for these requirements;
• Outlines design, construction, and construction monitoring standards;
• Includes procedures for road, bridge, and intermodal facilities;
• Identifies the roles of and the responsible entities for such activities;
• States the requirements for obtaining rights-of-way for construction of IRR facilities;
• Covers annual and semi-annual program reviews required as a part of the overall management and oversight of the IRR Program; and
• Discusses the processes and procedures used at the various office levels of the IRR Program to insure that the program is being carried under these regulations and the governing laws;
• Outlines the management systems that BIA must develop and maintain under 23 U.S.C. 303 for oversight and management of the IRR Program.

Subpart E—Service Delivery for Indian Reservation Roads

This subpart tells how the ISDEAA can be used:
• To contract for programs under the IRR Program;
• In self-governance agreements;
• In consortium contracts and agreements;
• In multiple-year agreements;
• For rights of first refusal;
• In applicability of advance payments for ISDEAA contracts and agreements;
• For contingency funds; and
• For cost overruns.

It also covers:
• Indian preference versus local preference in contracting;
• Contract enforcement;
• Applicability of the Buy Indian Act and the Buy American Act to the IRR Program;
• Applicability of the Federal Acquisition Regulations and Davis Bacon wage rates with respect to self-determination contracts or self-governance agreements;
• Force account work;
• Waivers of regulations;
• The Federal Tort Claims Act;
• Technical assistance available to tribes planning to contract for IRR Program eligible activities and/or functions; and
• Savings

Subpart F—Program Oversight and Accountability

This subpart discusses:
• Oversight roles and responsibilities for the IRR Program;
• Memoranda of Understanding;
• Professional licensing requirements;
• Requirements for project approvals; and
• Program accountability.

Subpart G—BIA Road Maintenance

This subpart covers:
• BIA Transportation Facility Maintenance Program;
• Eligible activities and facilities for maintenance including roads, bridges, airports, and other eligible facilities;
• Maintenance funding;
• Facility ownership;
• Maintenance responsibilities to the traveling public;
• Maintenance management system requirements;
• Maintenance standards that apply to the maintenance program;
• Mandated bridge inspection requirements and standards; and
• Provisions for emergency maintenance.

Subpart H—Miscellaneous

This subpart provides information to tribal governments on the transport of hazardous and nuclear waste and covers:
• Indian preference and tribal employment rights;
• Applicability of tribal taxes and fees for IRR Projects;
• Emergency relief for declared disasters on or near Indian reservations;
• Funding availability for repairs of eligible facilities;
• Tribal regulation of oversize and overweight vehicles;
• Reporting requirements;
• Welfare-to-work;
• Tribal employment rights;
• Establishing and operating tribal transportation departments and the eligible activities and/or functions for which these organizations can contract;
• Alternative dispute resolution procedures to resolve IRR Program disputes;
• Conflicts in law provisions; and
• Research activities available under the IRR Program.

III. Key Areas of Disagreement

During the negotiated rulemaking the Committee addressed seven general subject matter areas: (1) General provisions, (2) IRR Program policy and eligibility, (3) IRR Program funding, (4) planning, (5) design and construction of IRR Program facilities, (6) IRR Program service delivery, and (7) maintenance and miscellaneous provisions. The Committee broke each area into questions and answers, the vast majority of which were agreed to by the Federal and tribal representatives.

The tribal and Federal representatives did not reach a consensus on several issues. The disagreement items presented below by each side are not meant to be point-by-point rebuttals, rather, they are presentations of each side's views. The Federal and tribal suggestions on language (in question and answer format) for each area of disagreement are presented below, in order, by subpart and section, where appropriate. However, four areas of disagreement—advance funding, savings, contractibility, and availability of contract support funding—are outside the scope of this rulemaking. However, the Committee negotiated on these items and they are therefore presented together at the end of this section on disagreement items. In order to provide a complete proposed rule that could be commented upon, and pursuant to Administrative Procedure Act guidelines, the Federal text on the disagreement items is represented in the body of this proposed rule. Where Federal questions and answers are inserted into the rule, the section numbers are noted in the disagreement items below.

A. General Issues

The Tribal caucus and Federal caucus interpreted differently some statutory requirements about what TEA–21 requires BIA and FHWA to do and permits tribes to do, leading to disagreements on items such as availability of IRR Program funds under the Indian Self-Determination and Education Assistance Act, as amended (the ISDEAA).

Tribal View

As a general matter, the Tribal Caucus and Federal Caucus often disagreed over issues because they interpreted the statutory requirements of TEA–21 differently. For example, in the Tribal Caucus' view, TEA–21 plainly requires that all IRR Program funds be made available in accordance with the requirements of the Indian Self-Determination and Education Assistance Act, as amended (the ISDEAA), to Indian tribes that choose to administer IRR projects or the entire IRR Program. See 23 U.S.C. 202(d)(3). TEA–21 also provides that all funds made available under Title 23 U.S.C. for Indian reservation roads and bridges are subject to the ISDEAA mandates ''[n]otwithstanding any other provision of law or any interagency agreement or program guideline, manual or policy directive.'' *Id.* Many of the disagreement items which follow stem from disagreements about what TEA–21 requires BIA and FHWA to do and permits Indian tribes to do.

To the extent that the IRR regulations differ in any respect from the provisions in the ISDEAA, the Tribal Caucus believes that the IRR regulations should serve to advance—rather than retard—the Federal Government's avowed policy of increasing tribal autonomy and discretion in the operation of this federal Indian program. See Executive Order 13084, Consultation and Coordination with Indian Tribal Governments (Nov. 6, 2000) (mandating that executive agencies develop federal policies that ''respect Indian tribal self-government and sovereignty'' and that ''grant Indian tribal governments the maximum discretion possible'' with respect to Federal statutes and regulations.

Federal View

The Federal views below reflect the present Federal statutory and regulatory responsibilities of both DOI and DOT in their administration and oversight of the IRR Program.

The Federal Caucus agrees that TEA–21 applies the ISDEAA to all IRR Program funds. However, TEA–21 does not, as the tribal view states above, require all IRR Program funds to be made available to tribes. Simply stated, the disagreement in statutory interpretation is over whether all IRR Program funds must be transferred to tribes or whether all IRR Program funds are subject to the ISDEAA.

Section 1115(b) of TEA–21 provides:

(A) In General.—Notwithstanding any other provision of law or any interagency agreement, program guideline, manual, or policy directive, all funds made available under this title * * * shall be made available, upon request of the Indian tribal government * * * in accordance with the Indian Self-Determination and Education Assistance Act * * *.

(B) Exclusion of Agency Participation.—Funds for programs, functions, services, or activities, or portions thereof, including supportive administrative functions that are otherwise contractible to which subparagraph (A) applies, shall be paid in accordance with subparagraph (A) * * *.

B. Eligibility—Subpart B

The issue is whether BIA or FHWA makes the determination on a new proposed use of IRR Program funds. The Federal text is inserted at § 170.116.

Tribal View

The Tribal Caucus proposes the following regulatory provision to guide Indian tribes in determining whether a proposed use of IRR funds is allowable:

How Can an Indian Tribe Determine Whether a New Proposed Use of IRR Funds Is Allowable?

(a) An Indian tribe that proposes new uses of IRR funds may submit a written inquiry to BIA concerning whether the proposed use is eligible under Titles 23 and 25 of the United States Code, and other applicable provisions of federal law. The requesting Indian tribe must also provide a copy of its inquiry to FHWA.

(b) BIA must provide the requesting Indian tribe, with a response in writing, within 45 days of receipt of the written inquiry. BIA must approve the proposed use unless it can identify a specific statutory prohibition to the proposed use related to transportation. To the extent practicable, BIA will consult with FHWA and the IRR Program Coordinating Committee in addressing the inquiry.

(c) If BIA fails to issue a timely written response to the eligibility inquiry, the proposed use will be deemed to be allowable until guidance has been issued by the Coordinating Committee.

(d) BIA will refer all eligibility decisions to the Coordinating Committee for consideration for guidance updates.

(e) Denials of a proposed use may be appealed by the tribe under 25 CFR part 2.

(f) Nothing in this section shall be interpreted as modifying or diminishing an Indian tribe's authority to redesign programs and reallocate funds under Public Law 93–638, as amended, and applicable regulations.

When an Indian tribe assumes and performs IRR Program activities under either a self-determination contract or self-governance agreement, its ISDEAA agreement is an intergovernmental agreement and is with BIA, not FHWA. Under 23 U.S.C. 203, the Secretary of the Interior (and, thus, BIA) has express authorization to approve projects. This express statutory authority to approve projects independent of FHWA necessarily carries with it the ability to determine whether a proposed use of funds for a given project is permissible. General policy statements in 49 U.S.C. 101(b) about the need for the DOT does not preempt the specific grant of authority to the Interior Secretary contained in 23 U.S.C. 203. Therefore, the Tribal Caucus believes that tribal inquiries as to whether a proposed use of the IRR Program funding an Indian tribe administers under its ISDEAA agreement with BIA are appropriately directed to BIA and that BIA should be responsible for making the decision in a timely fashion.

The Federal Caucus approach would require the Indian tribe to submit its request to both BIA and FHWA for decision. This could lead to a situation where the agencies might issue inconsistent decisions. The Tribal Caucus believes that the Federal Caucus approach creates more procedural requirements than are necessary, discounts the fact that BIA has statutory authority to independently approve projects, overlooks that these ISDEAA agreements are 'government-to-government' agreements between BIA and the tribe, and is inconsistent with the ISDEAA. Under the Tribal Caucus approach, the inquiry is submitted directly to BIA, with a copy to FHWA, and BIA is the agency responsible for issuing the decision. By making BIA responsible for issuing the decision, instances of inconsistent or contradictory results or decisions by BIA and FHWA are avoided. The Tribal Caucus approach also facilitates the ability of BIA to timely seek input from FHWA by requiring the Indian tribe to provide a copy of its request to FHWA directly. This approach will provide FHWA with the ability to provide BIA with input or guidance, if it so chooses. This approach also recognizes that BIA, as a party to the ISDEAA agreement, is the appropriate entity to respond to such tribal inquiries about the program assumed under such an intergovernmental agreement.

With respect to the applicable standard, the Tribal Caucus believes

that a proposed use of IRR Program funds should be allowable unless the use would violate Congressional statutory dictates. The Tribal Caucus believes that the approach suggested by the Federal Caucus—that a proposed use must be approved if it is listed in Title 23 of the United States Code as an eligible item—rings hollow because the full Committee already took steps to ensure that all eligible items listed in Title 23 are incorporated into the Eligibility listing found in these regulations. The Tribal Caucus believes its approach on this issue is more consistent with the ISDEAA.

With respect to the amount of time for issuing a decision, the Tribal Caucus approach would limit the amount of time BIA has to issue a response to a maximum of 45 days because the building seasons tribes deal with are often extremely short, especially in Alaska and northern and mountainous regions of the United States. The 60 days the Federal Caucus prefers can effectively push tribal projects off until the following year.

Finally, with respect to the impact on redesign and reallocation authority, the Tribal Caucus believes that language should be included to clarify that this provision does not amend such authority which is otherwise available under the ISDEAA. Indian tribes performing IRR Program activities under self-determination contracts and self-governance agreements have some authority to redesign the program and reallocate funding in accordance with 25 U.S.C. 450j(j), 450j–1(o), 458cc(b). The Tribal Caucus recognizes that there are some limitations on this general redesign authority for construction activities. However, not all IRR Program activities are construction activities. Furthermore, no provision federal law requires tribes to obtain the approval of FHWA in advance of reprogramming or reallocating IRR Program funds in a manner which is consistent with the ISDEAA. With this in mind, the Tribal Caucus feels it is imperative to expressly state that the regulatory provision addressing new uses of IRR Program funds does not modify or diminish tribal redesign and reallocation authority which is otherwise available under the ISDEAA. Absent such a qualifying statement, one could incorrectly infer that this regulatory provision modifies such tribal redesign and reallocation authority.

Federal View

New proposed uses of IRR Program funds must be submitted to FHWA for approval for several reasons. Title 23 U.S.C. 204(h)(7) authorizes the Secretary of Transportation to make eligibility determinations for the Federal Lands Highway Program on projects for all funding categories, including the IRR Program. Title 49 U.S.C. 101(b) directs DOT to ensure the coordination and effective administration of the transportation programs of the United States Government. Eligibility determinations and use of funds is a crucial component of the effective administration of transportation programs. The eligibility list and the method for submitting new items for eligibility consideration ensures a consistent approach to national IRR transportation issues. The Federal position regarding eligibility denials provides for an appeal process pursuant to 25 CFR part 2.

The Federal proposal is as follows:

How Can a Tribe Determine Whether a New Proposed Use of IRR Funds Is Allowable?

(a) A tribe that proposes a new use of IRR program funds must submit a written inquiry to BIA and FHWA concerning whether the proposed use is eligible under Titles 23 and 25 of the United States Code and other applicable provisions of Federal law.

(b) For eligibility questions that refer to self-determination and self-governance contracting and road maintenance, BIA must provide a written response to the requesting tribe within 60 days of receipt of the written inquiry. For eligibility questions that refer to IRR Program, FHWA must provide a written response to the requesting tribe within 60 days of receipt of the written inquiry. BIA must approve the proposed use if it is authorized under Title 25 and is related to transportation. FHWA must approve the proposed use if it listed as an eligible item in Title 23. To the extent practicable and before denying the request, BIA or FHWA consults with the IRR Program Coordinating Committee.

(c) If either BIA or FHWA fails to issue the requesting tribe a timely written response to the eligibility inquiry, the proposed use will be deemed to be allowable until a determination has been made and the written response is provided to the tribe.

(d) BIA and FHWA will send copies of all eligibility determinations to the IRR Program Coordinating Committee and BIA regional offices.

(e) Tribes may appeal denials of a proposed use pursuant to 25 CFR part 2.

C. Updating the IRR TIP—Subpart D

The issue is how often the IRR TIP must be updated. The Federal text is inserted at § 170.420.

Tribal View

The Committee developed detailed planning regulations to better ensure the development of a comprehensive transportation program regardless of whether such program is administered by BIA, on behalf of Indian tribes, or is assumed by a tribe under the ISDEAA. Through better transportation planning, both tribes and BIA should maximize available resources. Only those transportation projects listed on the IRR TIP, however, are eligible for IRR construction funds. The Tribal Caucus therefore believes it is important: (1) That a specific time frame be set out in the IRR regulations governing the frequency with which BIA must update the IRR TIP, and (2) that a specific time frame be added by which BIA must actually complete the IRR TIP update once it has received a revised or amended tribal transportation improvement program (TTIP) or tribal priority list from an Indian tribe.

The Tribal Caucus recommended that the proposed regulation provide that updates to the IRR TIP occur on a quarterly basis, or as otherwise needed, and further proposed that the updating process, once BIA received a tribal request to modify the IRR TIP, be completed by BIA within 45 days from the date of receipt, except under unusual circumstances. Quarterly updates would ensure that BIA's update of the IRR TIP would occur on a regular schedule and would not be overly burdensome since it would be similar to the schedule by which State TIPS are updated. As proposed by the Tribal version, allowances are made for unusual circumstances. Regardless of how frequently an IRR TIP is updated, the 45-day limit is reasonable and will better ensure that IRR TIPS are accurate.

The Tribal Caucus recommends and requests public comment on the following regulatory provision to accomplish this goal:

How Is the IRR TIP Updated?

The updating process begins when BIA provides the projected IRR funding amounts to each tribe, or an analysis of the existing tribal priority list or TTIP. New transportation planning information or substantial changes to an IRR tribal project may require an IRR TIP update. BIA reviews the programming of proposed projects with the Indian tribal government and agreed upon adjustments are made to the IRR TIP on a quarterly basis or as otherwise needed. This updating process will, except under unusual circumstances, be completed within 45 days of receipt by BIA of the updated TTIP or tribal priority list submitted by the tribe.

Federal View

This issue involves the frequency of updating the IRR Transportation Improvement Program. Prior to Fiscal Year 2000, BIA submitted quarterly updated IRR TIPS to FHWA for review and approval. This quarterly procedure often resulted in untimely submissions of IRR TIPS to FHWA. This was a result of the overall TIP and Control Schedule

process, which required involvement of BIA Regional offices, BIA Division of Transportation in Albuquerque, and BIA DOT in Washington, DC. In addition, many of the quarterly updated TIPS submitted did not contain any significant changes to the previously approved TIP (*i.e.,* addition or deletion of projects). Therefore, a time-consuming exercise was conducted to produce an ''update'' that really did not update the TIP. Also, updating TIPS quarterly for 12 BIA Regions imposes an additional approximately 70 per cent cost in processing IRR TIPS.

Beginning in Fiscal Year 2000, FHWA requested that BIA submit TIP updates on an annual basis only, with updates submitted as required to reflect projects added to or deleted from the current TIP. Minor adjustments to funding between various projects, or within the activities (Preliminary Engineering, Construction Engineering, Construction) of a particular project, were determined to be insignificant and did not require the submittal of a TIP update.

The Federal view is that for Fiscal Year 2002 and beyond, the IRR TIP submittal process described above be continued for the following reasons:

(1) The IRR TIP development and submittal process is complex and lengthy. Performing four updates in one fiscal year may unnecessarily duplicate effort on the part of BIA and tribes, which could be performing other programmatic activities.

(2) The annual IRR Program funding, once established for a Fiscal Year, does not vary significantly within that Fiscal Year for a particular region or tribe, some minor increases or decreases may occur. Therefore, substantial changes to a TIP would not be anticipated over the course of a Fiscal Year, and updates would not be necessary on a frequent basis.

(3) Since public involvement process must occur before every TIP or TIP update/amendment is approved, fewer amendments would therefore decrease the necessity for multiple public involvement meetings for a single region's TIP, making the overall TIP approval process faster.

(4) Limiting the amount of TIPS submitted in a given Fiscal Year forces the tribes and BIA regions to conduct better ''up front'' planning cooperatively to ensure all tribal priorities are being initially included in the TIP. While it is understood that leadership changes in a tribe may require mid-year changes to a TIP, these changes could be better coordinated to prompt only one amendment per year rather than the recommended three per year.

The Federal view is that IRR TIPS only require updating as necessary not quarterly.

The Federal proposal is as follows:

How Is the IRR TIP Updated?

The updating process begins when BIA provides the projected IRR Program funding amounts to each tribe, or an analysis of the existing tribal priority list or TTIP. New transportation planning information or substantial changes to an IRR tribal project may require an IRR TIP update. BIA reviews the programming of proposed projects with the tribes. Agreed upon adjustments are made to the IRR TIP following the IRR TIP process defined in this part on an annual basis or as otherwise needed.

D. PS&E Approval Authority—Subpart D

The tribal caucus and Federal caucus disagree on the issue of whether a tribe may assume the review and approve plans, specifications and estimates. The Federal text is inserted at §§ 170.480–481.

Tribal View

The Tribal Caucus position is that the review and approval of plans, specifications and estimate (PS&E) packages are activities that Indian tribes may assume under self-determination contracts or self-governance agreements. In fact, the Interior Department has already permitted tribal assumption under a self-governance agreement of the authority to review and approve PS&E packages in the IRR Self-Governance demonstration. Similarly, Indian tribes, as public authorities, may assume the authority to review and approve PS&E packages under a Stewardship Agreement. Moreover, it is the Tribal Caucus position that an ISDEAA agreement can either serve as a Stewardship Agreement or incorporate an existing Stewardship Agreement of the tribe, to enable the tribe to, among other things, review and approve PS&E packages.

The Tribal Caucus acknowledges that all PS&E packages must be signed and/or sealed by a licensed professional engineer. However, it is the Tribal Caucus position that the extra-statutory ''health and safety review'' that the Federal Caucus insists on having simply is not required so long as the Indian tribe or tribal organization has provided assurances in the contract or agreement that the construction will meet or exceed proper health and safety standards, the licensed professional engineer approving the PS&E has certified that the plans and specifications meet or exceed the proper health and safety standards, and BIA receives a copy of this certification. See 25 U.S.C. 458cc(e)(2) (''In all construction projects performed pursuant to this part, the Secretary shall *ensure that proper health and safety standards are provided for in the funding agreements.*'') (Emphasis added.) The Tribal Caucus approach is substantially the same as the clarification approach recently considered by the Senate Committee on Indian Affairs, which remarked: ''[P]roviding tribes flexibility in meeting health and safety standards will not limit the ability of BIA or FHWA to ensure that the IRR roads and bridges are built safely and efficiently. BIA will retain its monitoring and final inspection authorities as currently permitted under law * * * Retaining a bureaucratic check on every detail of IRR planning and construction is unnecessary and creates redundancy and inefficiency.'' Senate Report 106–406 at pp. 6–7 (Sept. 11, 2000).

The Tribal Caucus strongly disagrees with the Federal Caucus' approach to this issue because it would place unnecessary and burdensome requirements on Indian tribes before they would be deemed eligible by FHWA to assume PS&E approval authority for IRR projects. As proposed by the Federal Caucus, only Indian tribes which meet 'the requirements of a state as defined in 23 U.S.C. 302(a)' of TEA–21 and enter into a tribal IRR Program stewardship agreement with DOT would be delegated PS&E review and approval authority for IRR projects. The Federal Caucus has not identified in its proposed regulation what FHWA requirements an Indian tribe would need to satisfy to demonstrate that it has 'adequate powers' and is 'suitably equipped and organized to discharge to the satisfaction of the Secretary [of Transportation] the duties required by this title' as set forth in 23 U.S.C. 302. Also, the Federal Caucus references 23 U.S.C. 106, 302 and 402 as giving FHWA authority to determine which public authorities, including tribes, are capable of approving PS&E packages, conducting project audits, project closeouts, inspections, and controls. However, sections 106 and 302 by their own terms only apply to state transportation departments, and do not apply to Indian tribes or the Federal Lands Highway Program. Also, section 402 addresses Highway Safety Programs only.

The Federal Caucus' proposal would require that a tribe also negotiate a separate stewardship agreement with DOT, rather than permitting the tribe to assume such duties under its self-determination contract or self-governance agreement. It is unclear why

stewardship provisions cannot be included in a self-determination contract or self-governance agreement, when such agreements can be used to explain the roles and responsibilities of the federal and tribal parties to the agreement. The Federal Caucus provision would further require that stewardship agreements include provisions for a health and safety review by the Secretary of the Interior and contain provisions and procedures by which the facility owner may review the PS&E. These provisions would place far too much discretion in the hands of FHWA, mandate agency oversight where such oversight may not be warranted, and increase the regulatory burden on tribes. The Tribal Caucus solution is to streamline the process as Congress intended.

The Tribal Caucus proposes the following two regulatory provisions to clarify this issue:

Can a Tribe Review and Approve PS&E Packages for IRR Projects?

Yes. As a public authority, a tribe may assume review and approval authority of PS&E packages under a Stewardship Agreement pursuant to a Public Law 93–638 contract or self-governance agreement. The Public Law 93–638 contract or self-governance agreement may serve as the Stewardship Agreement. Alternatively, a tribe without a Stewardship Agreement may assume responsibility to review and approve PS&E packages under a self-determination contract or self-governance agreement so long as the Indian tribe or tribal organization has: (1) Provided assurances in the contract or agreement that the construction will meet or exceed proper health and safety standards; (2) obtained the advance review of the plans and specifications from a licensed professional engineer who has certified that the plans and specifications meet or exceed the proper health and safety standards; and (3) provided a copy of the certification to BIA.

Must All PS&E Packages Be Approved?

Yes. All PS&E packages must be signed and/or sealed by the appropriate licensed professional engineer, and by the appropriate official as follows:

(a) Absent an approved Stewardship Agreement, FHWA approves all PS&E packages submitted by BIA;

(b) Where an approved Stewardship Agreement exists between FHWA and the BIA Regional Office, PS&E packages are approved by an official in the BIA Regional Office;

(c) Where an Indian tribe has assumed the responsibility to approve PS&E packages for IRR projects, in accordance with the question and answer above, the PS&E packages are approved by the tribe;

(d) Where an Indian tribe has not assumed the responsibility to approve PS&E packages under paragraph (c) above, PS&E packages are approved under paragraph (a) or (b) above, as applicable.

Federal View

Under 23 U.S.C. 106, 302 and 402 certain activities can be delegated to public authorities which have adequate powers and are suitably equipped and organized to carry out, to the satisfaction of the Secretary, the duties of Title 23. These include Plans, Specifications, and Estimate (PS&E) approval, conducting project audits, project closeouts, inspections, materials testing, and quality control. Moreover, since Public Law 93–638 requires the Secretary to assure health and safety, the Secretary must still review the PS&E, even if PS&E approval has been delegated to the public authority. It follows that the facility owner/maintainer must concur with the proposed construction activities. Finally, inclusion of PS&E approval and other stewardship provisions in a recent pilot self-governance agreement has created a situation where changes to the stewardship provisions are requested on a yearly basis. While tribes can enter into a stewardship agreement with the Secretary of Transportation, such stewardship provisions cannot be included in a self-determination contract or self-governance agreement.

The Federal proposal is as follows:

Can a Tribe Review and Approve PS&E Packages for IRR Projects?

Yes, a tribe can review and approve PS&E packages for IRR projects if the tribe meets the requirements of a state as defined in 23 U.S.C. 302 (a) and enters into a tribal IRR Program stewardship agreement with the Secretary of Transportation or designee.

Who Must Approve all PS&E Packages?

All PS&E packages must be signed and/or sealed by the appropriate licensed professional engineer and by the appropriate official as follows:

(a) Absent an approved IRR Program stewardship agreement, FHWA approves all PS&E packages submitted by BIA;

(b) When an approved BIA regional IRR Program stewardship agreement exists, PS&E packages are approved by an official in the BIA regional office;

(c) When a tribe has assumed the responsibility to approve PS&E packages for tribal, state, and locally owned IRR facilities through a tribal IRR Program stewardship agreement, the tribe approves PS&E packages with the consent of the facility owner after a health and safety review by the Secretary;

(d) When a tribe has not assumed the responsibility to approve PS&E packages under paragraph (c) above, BIA or FHWA approves PS&E packages under paragraph (a) or (b) above, as applicable.

E. IRR Construction Project Reports—Subpart D

The issue is how to regulate IRR construction project closeouts. The Federal text is inserted at §§ 170.485–489.

Tribal View

Detailed program oversight regulations have been developed by the Committee, with a number of provisions devoted to preparation of the IRR construction project close out report. The Federal and Tribal Caucuses did not reach consensus on a number of regulatory provisions governing the closeout of an IRR construction project. The Tribal and Federal Caucuses agreed to revise some regulatory provisions to substitute ''IRR construction project report'' in place of ''IRR construction project audit'' as the focus of the question and to delete regulations addressing an IRR project audit. It was the view of the Tribal Caucus that project audits were adequately addressed in existing Title I and Title IV regulations implementing the ISDEAA (See 25 CFR parts 900 and 1000). In some instances, the proposed regulations were corrected to reflect this intent. One regulatory provision, however, does not appear to have been modified as the Tribal Caucus believes should have been done. As a result, the proposed regulation contains a provision relating to an IRR construction project audit. The Tribal Caucus believes that the IRR regulations should only address IRR construction project closeout reports and omit any discussion of IRR project audits. Substitution of the phrase ''construction project report'' for the phrase ''project audit'' will accomplish this goal.

Accordingly, the Tribal Caucus proposes the following regulatory provision and requests public comment:

Who Has Final Acceptance of the IRR Construction Project Report?

(a) With regard to IRR construction projects performed by BIA, the Secretary has final acceptance and approval of the IRR construction project report.

(b) With regard to IRR construction projects performed by tribes under Public Law 93–638, the signatory authority has final acceptance and approval of the IRR construction project report.

The Tribal Caucus differed with the Federal Caucus on the requirement that, as part of an IRR construction project closeout, the facility owner must accept the IRR project. It is the Tribal Caucus' view that closeout of an IRR construction project, which the regulations define as the final accounting of all IRR construction project expenditures and closing of the financial books of the Federal Government for the project, occurs once the final inspection has been completed and the IRR construction project has

been accepted by the signatory authority for the project, which is the entity with final authority to sign the PS&E package.

Therefore, the Tribal Caucus recommends and requests public comment on the following regulatory provision:

When Does a Project Closeout Occur?

A project closeout occurs after the final project inspection is concluded and the IRR project is accepted by the signatory authority (the entity with final authority to sign the PS&E package).

It is the Tribal Caucus position that no regulation is required to identify the entity which must conduct the project closeout and prepare the IRR construction project closeout report. When an IRR construction project is performed by an Indian tribe under a self-determination contract or self-governance agreement, Title I and Title IV regulations implementing the ISDEAA adequately address the issue of who must conduct the project closeout and develop the IRR construction project closeout report. For example, 25 CFR 900.130(d) states: ''Upon completion of the project, the Indian tribe or tribal organization shall provide to the Secretary a reproducible copy of the record plans and a contract closeout report.'' The Tribal and Federal Caucuses agree on this point. The Tribal Caucus, however, does not believe that the Federal Caucus has appropriately described the circumstances under which BIA performs the IRR construction project on behalf of a tribe. The Federal Caucus supports regulatory text which states that: ''When the activity and/or project is conducted using BIA force account, [the] Regional Engineer or designee is responsible for closing out the project and preparing the report.'' BIA force account is only one of several methods available to BIA when it performs the IRR construction projects on behalf of tribes. As a result, it is the Tribal Caucus' position that no IRR regulatory provision is preferable to the incomplete provision proposed by the Federal Caucus.

The Tribal Caucus believes that the Title I Self-Determination regulations (25 CFR part 900) and Title IV Self-Governance regulations (25 CFR part 1000) adequately cover the project closeout reporting obligations of Indian tribes performing IRR activities under the ISDEAA. While it is appropriate for these proposed IRR regulations to identify the content of the project closeout report when BIA administers the IRR Program for a particular tribe, the regulations should leave the content of the IRR construction project closeout report to the negotiations between BIA and a tribe when a tribe assumes the obligation to prepare the closeout report under an ISDEAA agreement. The Tribal Caucus disagrees with the Federal Caucus' proposed regulation which mandates that ''all project information must be made accessible for the IRR construction project closeout'' when a project closeout and preparation of the closeout report is undertaken by a tribe under a self-determination contract or self-governance agreement.

It is the Tribal Caucus position that the proposed regulation be limited to BIA's preparation of the closeout report and leave the scope of project information to be made accessible for the IRR construction project closeout, when a tribe assumes such duties under the authorities of the ISDEAA, to the negotiation of BIA and the tribe.

The Tribal Caucus therefore requests public comment on the following recommended regulatory provision:

What Information Is Made Available for the Project Closeout?

If the project closeout and development of project closeout report is not contracted or compacted then all project information must be made accessible for the IRR construction project closeout. Such information may include, but is not limited to: Daily diaries, weekly progress reports, sub-contracts, subcontract expenditures, salaries, equipment expenditures, etc.

The Tribal Caucus believes that it is not necessary to identify in these regulations the entities which must receive a copy of the IRR construction project closeout report. As drafted, however, the proposed regulation is incomplete as it only addresses the entities to receive the closeout report for IRR construction projects when such projects are assumed under a self-determination contract or self-governance agreement. The proposed regulation fails to address the obligation of BIA to provide the closeout report to the Indian tribal government served by the construction project and to appropriate BIA officials, such as BIA Regional Engineer, BIA Agency Superintendent or Field Officer. The proposed regulation would read as follows:

Who Is Provided a Copy of the IRR Construction Project Closeout Report?

Projects negotiated under Public Law 93–638, as amended, shall specify who will be provided a copy of the closeout report.

Unless the proposed regulation is corrected in the final regulation to identify the recipients of the IRR construction project closeout report, regardless of which entity prepares the report, the Tribal Caucus position is to delete the provision entirely.

Federal View

The issue appears to be whether these regulations need to address project closeouts and audit. 25 CFR 900.131(b)(10) states that ''The Secretary retains the right to conduct final projects inspections jointly with the Indian tribe or tribal organization and to accept the building or facility.'' A similar provision for self-governance tribes is provided in 25 CFR 1000.249(e). While 25 CFR 900.130(d) does contain project closeout requirements for self-determination contracts there is no similar provision for self-governance tribes in 25 CFR part 1000.

The Federal proposal is as follows:

Who Has Final Acceptance of the IRR Project Audit?

The Secretary has final acceptance and approval of the project including the IRR project audit.

When Does a Project Closeout Occur?

A project closeout occurs after the final project inspection is concluded and the IRR project is accepted by the facility owner and the Secretary.

Who Must Conduct the Project Closeout and Develop the Report?

(a) The self-determination contract or self-governance agreement must specify who is responsible for project closeout and development of a final report.

(b) The Secretary is responsible for closing out the project and preparing the report when the project is conducted by the Secretary.

What Information Must Be Made Available for the Project Closeout?

(a) When the Secretary conducts the project, all project information must be made accessible for the IRR construction project closeout. Such information may include, but is not limited to: Daily diaries, weekly progress reports, subcontracts, subcontract expenditures, salaries, equipment expenditures, *etc.*

(b) When a tribe conducts the project under a self-determination contract or self-governance agreement, all project information must be made accessible for the IRR construction project closeout. Such information may include but is not limited to: Daily diaries, weekly progress reports, subcontracts, subcontract expenditures, salaries, equipment expenditures, *etc.*

Who Is Provided a Copy of the IRR Construction Project Closeout Report?

(a) When the Secretary conducts the project, copies of the IRR construction project closeout reports are provided to the affected tribes and the Secretary of Transportation.

(b) When a tribe conducts the project under a self-determination contract or self-governance agreement, the contract or agreement must specify who will be provided a copy of the closeout report.

F. Content of Rights-of-Way Documents—Subpart D

The issue is on use of 25 CFR 169 in these regulations for IRR's as authority for rights-of-way over Indian Lands. The Federal text is inserted at §§ 170.501–502.

Tribal View

The Tribal Caucus is in general agreement with the Federal Caucus on the minimum content of a right-of-way document. The Tribal Caucus, however, disagrees that the status of the land dictates the content of the right-of-way document and strongly disagrees with the Federal Caucus' reliance upon and reference to 25 CFR 169 (Rights-of-Way Over Indian Lands) in these proposed regulations without appropriate qualifications. This is especially so in cases where it is the Indian tribe itself which seeks to construct a road across its own trust or restricted fee lands.

Part 169 primarily sets out procedures by which third parties, such as railroads, utilities, and state or local governments, obtain rights-of-ways over reservation lands. Many of the requirements of part 169 are not applicable to Indian tribes securing rights-of-way for roads on their own reservations. For example, 25 CFR 169.4 requires that an applicant for a right-of-way apply for permission to survey the land, and in connection with the application, must demonstrate to BIA's satisfaction its good faith and financial responsibility. Part 169 also requires that applicants must also agree to indemnify the United States, the owners and occupants of the land against liability for loss of life, personal injury and property damage occurring because of survey activities caused by the applicant. 25 CFR 169.14 requires an applicant for a right-of-way to make a deposit to cover damages and consideration for acquiring right-of-way at the time of making the application.

By cross-referencing 25 CFR part 169, the proposed regulations do not set out a clear response to the questions posed, but instead generate a series of questions about the extent to which part 169 should apply to the IRR Program. The Tribal Caucus recommends that the content of right-of-way documents be uniform and that no distinction be made in the right-of-way document regardless of whether the right-of-way sought is over trust, restricted fee, or fee simple lands.

Another concern of the Tribal Caucus is that some tribes have federal statutory authority to grant rights-of-way across their reservations without Secretarial approval under part 169. See, *e.g.,* 64 Stat. 442, as amended, 75 Stat. 499 § 2. The Tribal Caucus has proposed edits to a number of questions which acknowledge that some tribes have this authority, without otherwise altering the applicability of part 169 where part 169 is appropriate. The Tribal Caucus recommends that a provision be added to the regulation which makes clear that ''nothing in this part is intended to supersede 25 CFR part 169 where part 169 is applicable to the right-of-way at issue.''

The Tribal Caucus therefore requests public comment on the following regulatory provisions:

What Must the Rights-of-way Easement Documents Contain at a Minimum?

(a) All rights-of-way documents shall include the following:

(1) Identification of the grantor and grantee;

(2) Legal description of the property acquired for the right-of-way;

(3) Right-of-way plat/map of definite location;

(4) A statement of the term of the right-of-way, whether for a specific term of years, whether it includes a right of renewal, or whether the grant is in perpetuity;

(5) Terms and conditions on the grant of the right-of-way, including but not limited to, other permissible uses of the right-of-way, or specific restrictions on the rights-of-way easements;

(6) Identification of whether the rights-of-way includes the right to construct, and/or re-construct the facility; and

(7) A statement on whether the right-of-way may be transferred or assigned, and the terms and conditions under which a transfer or assignment may occur.

(b) Nothing in this part is intended to supersede the requirements of 25 CFR part 169 where part 169 is applicable to the right-of-way at issue.

(c) A right-of-way document, if covering maintenance, may include an identification of maintenance responsibilities assumed by the grantee or retained by the grantor, and whether such rights convey with any transfer of the rights-of-way.

It is the Tribal Caucus' view that procedures for acquiring rights-of-way over Indian trust lands and Indian lands subject to a restraint against alienation (restricted fee lands) should be the same, and separate regulatory provisions should address procedures to acquire right-of-way interests which traverse fee simple lands which are not subject of a federal restraint against alienation. The Tribal Caucus further believes that the party who must consent to the granting of a right-of-way will also depend upon the status of the land in question. In cases where an Indian tribe has granted a use right on its reservation to an individual Indian by virtue of a land use assignment, the Tribal Caucus believes that acquiring the individual Indian's interest for purposes of a right-of-way must be done in accordance with applicable tribal law and require the written consent of the tribe. The Tribal Caucus believes that this course of action is entirely consistent with applicable tribal law regarding such arrangements. The Tribal and Federal Caucuses also disagree on the applicability of part 169 to all rights-of-way over Indian allotted lands. It is the Tribal Caucus' view that other federal laws may apply and that the regulation should simply reflect that part 169 ''or such other federal law'' as may apply to the allotment at issue. As noted above, part 169 primarily addresses the procedures which third parties acquire right-of-way interests over Indian lands. If the regulations are to govern a tribe's administration of the IRR Program, the regulation must be drafted to accommodate both BIA and tribal administration of the program, and not be focused solely on BIA.

The Tribal Caucus recommends and requests public comment on the following regulatory provisions:

Who Grants a Right-of-way on Indian Trust or Restricted Fee Lands?

The tribe must consent in writing to the granting of a right-of-way on any land title to which is held by the tribe or in which the tribe holds a beneficial interest. Where an individual Indian has an interest in tribal land by virtue of a land use assignment, acquisition of the individual Indian's interest for purposes of a right-of-way shall be done in accord with applicable tribal law, and require the written consent of the tribe. Where an individual Indian holds an allotment in trust or subject to a restraint against alienation, acquisition of a right-of-way over such allotment must be made in accordance with 25 CFR 169, or such other federal law as may apply to the allotment at issue.

Federal View

With respect to questions affecting rights-of-way over Indian lands, the existing regulations covered in 25 CFR 169 are adequate. It is the Federal view that any issues beyond the scope of the existing 25 CFR 169 are properly dealt with in a future revision of part 169 and are inappropriate for inclusion in this rule or for public comment.

The Federal proposal is for two additional questions that reference 25 CFR 169 and reflect the minimum information an easement document must contain. They are as follows:

What Must a Right-of-way Easement Document Contain at a Minimum?

(a) For rights-of-way across Indian trust and restricted lands, those documents required by 25 CFR 169 must be submitted; and

(b) For lands other than trust or restricted, the following information must be submitted:

(1) Identification of the grantor and grantee;

(2) A legal description of the property acquired for the right-of-way;

(3) A right-of-way plat/map of definite location;

(4) A statement of the term of the right-of-way, whether for a specific term of years, whether it includes a right of renewal, or whether the grant is in perpetuity;

(5) Terms and conditions on the grant of the right-of-way, including but not limited to, other permissible uses of the right-of-way, or specific restrictions on the rights-of-way easements;

(6) Identification of whether the rights-of-way includes the right to construct, and/or re-construct the facility; and

(7) A statement on whether the right-of-way may be transferred or assigned and the terms and conditions under which a transfer or assignment may occur.

(c) If a rights-of-way document covers maintenance it may include an identification of maintenance responsibilities assumed by the grantee or retained by the grantor and whether such rights convey with any transfer of the rights-of-way.

How Are Rights-of-Way Granted on Indian Trust or Restricted Fee Lands?

Grants of right-of-way must be made under the provisions of 25 CFR 169.

G. Self-Governance Compacts—Subpart E

This issue is whether under the ISDEAA tribes may assume only individual IRR projects or all IRR projects that are not inherently Federal functions. The Federal text is inserted at §§ 170.633–170.634.

Tribal View

The Federal Caucus approach appears to be that Indian tribes may only assume individual IRR projects. It is the Tribal Caucus' position that this approach is inconsistent with TEA–21 or Public Law 93–638, as amended, and limits the opportunity for tribes to administer entire IRR construction programs under a self-governance agreement.

TEA–21 specifically includes language that accommodates the ability of an Indian tribe to assume under a self-governance agreement all IRR Program activities that are not inherently federal functions:

(3) Contracts and Agreements with Indian tribes—

(A) *In General.*—Notwithstanding any other provision of law or interagency agreement, program guideline, manual, or policy directive, *all funds made available under this title* for Indian reservation roads and for highway bridges located on Indian reservation roads to pay *for the cost of programs, services, functions, and activities, or portions thereof,* that are specifically or functionally related to the cost of planning, research, engineering, and construction of any highway, road, bridge, parkway, or transit facility that provides access to or is located within the reservation or community of an Indian tribe *shall be made available,* upon request of the Indian tribal government, to the Indian tribal government for contracts and agreements for such planning, research, engineering, and construction *in accordance with the Indian Self-Determination and Education Assistance Act.*

(B) *Exclusion of Agency Participation.*—Funds for programs, services, functions, and activities, or portions thereof, *including supportive administrative functions that are otherwise contractible to which subparagraph (A) applies,* shall be paid in accordance with subparagraph (A) without regard to the organizational level at which the Department of the Interior that has previously carried out such programs, services, functions, or activities. 23 U.S.C. 202(d)(3). [Emphasis added.]

The Tribal Caucus position is that these part 170 regulations should contain provisions that both recognize and appropriately accommodate the ability of Indian tribes to assume under a self-governance agreement all IRR Program activities that are not inherently federal functions.

Federal View

Section 1000.240 of 25 CFR specifies that the IRR construction program including projects and activities are subject to 25 CFR 1000, subpart K and that these regulations should reference subpart K. Sections 1000.87 and 1000.243 require that the agreement specify in writing the services, functions, and responsibilities to be assumed by the tribe/consortium and those retained by the Secretary. Since an FHWA-approved IRR TIP is the document approving the use of IRR Program funds for projects and activities, it is appropriate that each project, by activity performed by the tribe/consortium, be listed separately in the agreement in sufficient detail to adequately describe the work or through attachment of the IRR TIP and Control Schedule.

The Federal proposal is as follows:

What IRR Programs, Functions, Services, and Activities Are Subject to the Construction Regulations Set Forth in Subpart K of 25 CFR Part 1000?

All IRR design and construction projects and activities, whether included separately or under a program in the agreement, are subject to the construction regulations set forth in subpart K of 25 CFR part 1000.

How Are IRR Program Projects and Activities Included in the Self-governance Agreement?

IRR Program projects and activities are included in the self-governance agreement as specific line items for each project or activity with sufficient detail to adequately describe the work as included in FHWA-approved IRR TIP and Control Schedule. Also, each agreement must include all other information required under 25 CFR 1000, subpart K.

H. Content of Stewardship Agreements—Subpart F

The issues are whether a tribe may enter into a Stewardship Agreement with FHWA directly and what a Stewardship Agreement must contain. The Federal text is inserted at §§ 170.701–170.705.

Tribal View

The Tribal Caucus agrees with the Federal Caucus that a Stewardship Agreement is an agreement between FHWA and the BIA Regional Office for assumption of FHWA's responsibilities for approval of Plans, Specifications & Estimates (PS&E). It was not the intent of the Tribal Caucus, however, that by agreeing to this definition, an Indian tribe would be precluded from entering into a Stewardship Agreement directly with FHWA and incorporate such agreement into its self-determination contract or self-governance agreement. Alternatively, a tribe without a Stewardship Agreement can assume authority to review and approve PS&E packages under a self-determination contract or self-governance agreement. There was no consensus on the mechanism by which an Indian tribe could assume PS&E approval when such authority had been delegated by FHWA to BIA. The Tribal Caucus recognizes the authority of Indian tribes to develop their own policies and procedures provided that such policies and procedures are consistent with applicable Federal requirements.

The tribal recommendation is to revise the proposed regulation to simply list the content of the Stewardship Agreement without identifying whether a particular activity is performed by BIA or a tribe and to require that the work to be performed will comply with ''applicable requirements'' (Federal or tribal) rather than stating that the work must meet ''prescribed policies and procedures of BIA and FHWA.'' To achieve this result, the Tribal Caucus recommends revising the proposed regulation to read as follows:

What Must Be Included in an IRR Program Stewardship Agreement?

An IRR Program Stewardship Agreement must include:

(a) Description of the planning, design, construction, and maintenance activities developed to ensure work meets applicable requirements;

(b) Assumption of review and approval of PS&Es developed for Indian Reservation Road (IRR) construction projects and project monitoring; and

(c) The standards which will be implemented in accordance with these regulations.

Nothing in the Stewardship Agreement shall be construed to diminish or effect the rights, privileges and responsibilities of Indian tribes or tribal organizations to administer IRR programs under a self-determination contract or self-governance agreement, or to incorporate these IRR Program activities into such a contract or agreement.

Federal View

23 U.S.C. 204(j) provides that projects selected by tribes from the TIP shall be subject to the approval of both the Secretary and the Secretary of Transportation. This includes approval of the plans, specifications, and estimates. 23 U.S.C. 106 allows the Secretary of Transportation to enter into agreements with public authorities that address assumption of some of the Secretary's responsibilities. 23 U.S.C. 302 requires public authorities that participate in the highway program have adequate powers and be suitably equipped and organized to carry out, to the satisfaction of the Secretary, the duties required in Title 23. Prior to TEA–21, this assumption was covered in 23 U.S.C. 117, certification acceptance. Certification acceptance agreements included:

(1) Identification of which project approvals were delegated to BIA;

(2) Identification of Federal requirements that had to be adhered to in BIA's administration of these project authorities and handling of exceptions; and,

(3) BIA processes for providing the internal management of these authorities in lieu of Federal involvement.

FHWA has developed policy on stewardship and program oversight instead of issuing regulations. Any such agreements must be consistent with this policy. Hence, all such agreements will require FHWA review and approval because they deal with FHWA responsibilities.

The Federal proposal is as follows:

What Is a IRR Program Stewardship Agreement?

It is an agreement between FHWA and BIA Division of Transportation for assuming FHWA's responsibilities for planning, design, and construction within the IRR Program.

What Is a BIA Regional IRR Program Stewardship Agreement?

It is an agreement between FHWA, BIA Division of Transportation and a BIA regional office for assuming FHWA's responsibilities of the planning, design, and construction within the IRR Program.

Can a Self-Determination Contract or Self-Governance Agreement Serve as an IRR Program Stewardship Agreement?

No. A tribe must use a tribal IRR Program stewardship agreement. It is a separate agreement which details the tribe's assuming a portion of FHWA's and/or BIA's responsibilities for planning, design, and construction within the IRR Program.

What Must Be Included in a BIA Regional or Tribal IRR Program Stewardship Agreement?

At a minimum, these agreements must include:

(a) BIA regional roads or tribal transportation department organization chart;

(b) An IRR project development and construction flow chart;

(c) Description of the transportation planning, design, procurement, project administration, and construction processes to be followed;

(d) IRR design and construction standards to be used in accordance with this part;

(e) List of roles and responsibilities to be assumed;

(f) Provisions and process for obtaining the Secretary's health and safety reviews of the PS&E; and

(g) Provisions and processes for obtaining the facility owner's review of the PS&E.

What Is the Process for Obtaining the Facility Owner's Review of the PS&E?

The process is as follows:

(a) BIA region or tribe prepares and submits an IRR Program stewardship agreement to BIA Division of Transportation. BIA Division of Transportation forwards a copy to FHWA;

(b) BIA and FHWA visit the tribe or BIA region and evaluate the capabilities to assume the proposed IRR Program responsibilities;

(c) FHWA, in writing, advises the tribe or BIA region of any applicable changes to the proposed stewardship agreement; and

(d) After all changes are made, the revised agreement is approved by FHWA or its designee.

I. Arbitration Provisions—Subpart H

The disagreement in this section is about what alternative dispute resolution methods are available to the Federal government and tribes and how alternative dispute resolution options may be used. The Federal question and answer is inserted at §§ 170.941 through 170.952.

Tribal View

The ADR approach chosen must be ''appropriate'' for the situation and must not derogate the principals and authorities of the ISDEAA and its implementing regulations, and recognizes that ADR may be appropriate and is authorized in the construction context under the ADR Act; 25 U.S.C. 450j(a)(3), 450j(m)(3)(E), 450l (model contract section (b)(12)), 450m–1(d), 458cc(e)(1), 458cc(l); 41 U.S.C. 605(d)–(e); 25 CFR 900.122(b)(5), 900.131(b)(11)(iv), 900.217; 25 CFR 1000.84, 1000.252, 1000.422, 1000.424; and 48 CFR 33.214.

The Tribal Caucus would support clarification of this matter as follows:

Are Alternative Dispute Resolution Procedures Available to Self-Determination and Self-Governance Tribes and the Secretary to Resolve Disputes Between Them in Performing IRR Public Law 93–638 Activities?

Indian tribes and tribal organizations are entitled, at their option, to use the appropriate dispute resolution techniques or procedures set out in:

(a) The ADR Act, 5 U.S.C. 571–583;

(b) The Contract Disputes Act, 41 U.S.C. 601–613; and

(c) The Indian Self-Determination and Education Assistance Act (including the mediation and alternative dispute resolution options listed in 25 U.S.C. 450l (model contract section (b)(12)) and the implementing regulations.

Federal View

This issue is about what alternative dispute resolution methods are available and how alternative dispute resolution options may be used. The Federal view allows arbitration as a different dispute resolution option as long as it does not conflict with existing regulations. The ADR Act requires the consent of both parties for any ADR technique to be used. In addition, it is the Federal Caucus' view that the Contract Disputes Act of 1978, 41 U.S.C. 601, as amended, Public Law 95–563, applies to Titles I and IV construction activities. The proposed regulation drafted by the Committee would improperly change those regulations. The Federal Caucus adds ''for non-construction activities'' to (c) to make clear that the model contract section is inapplicable to construction activities. The Federal Caucus' proposed question and answer is as follows:

Are Alternative Dispute Resolution Procedures Available to Self-Determination and Self-Governance Tribes and the Secretary to Resolve Disputes Between Them in Performing IRR Public Law 93–638 Activities?

Yes. Except as required in 25 CFR part 900 and part 1000, tribes and tribal organizations are entitled to use the appropriate dispute resolution techniques or procedures set out in:

(a) The ADR Act, 5 U.S.C. 571–583;

(b) The Contract Disputes Act, 41 U.S.C. 601–613; and

(c) The Indian Self-Determination and Education Assistance Act (including the mediation and alternative dispute resolution options listed in 25 U.S.C. 450l (model contract section (b)(12)) and the implementing regulations for non-construction activities.

The Department considers the following issues to be outside the scope

of this rulemaking. However, because the Committee discussed these issues and attempted to come to consensus on them, they are presented to give a full picture of the Committee's deliberations.

J. Advance Funding—Subpart E

The issue is under what circumstances advance funding is available under self-determination contracts and self-governance agreements to tribes performing IRR construction and construction-engineering activities under these contracts and agreements. The Federal text is inserted at §§ 170.614–618.

Tribal View

The full Committee reached agreement regarding the advance payment of IRR funds to Indian tribal governments performing IRR non-construction activities under self-determination contracts and self-governance agreements. However, the Tribal Caucus and the Federal Caucus disagreed over the wording of proposed regulations for the advance payment of IRR funds to tribal governments performing IRR construction and construction-engineering activities under these contracts and agreements.

In the Tribal Caucus' view, the Federal Caucus' proposed advance funding provisions would impose restrictions on the awarding of advance payments that are unnecessary as a matter of law and unwise as a matter of policy. For the reasons explained below, the Tribal Caucus proposes that the following two ''advance funding'' provisions also be adopted when the full Committee develops the final rule:

May an Indian Tribe or Consortia Receive Advance Payment of IRR Funds Under a Self-Determination Contract for Construction Activities?

Yes. BIA and the tribes must negotiate a schedule of advance payments as part of the terms of a self-determination contract that includes construction or constructing engineering activities. Tribes may receive advance payments of IRR funds in annual, semiannual or quarterly installments in accordance with 25 CFR 900.132. Indian tribes may not expend funds advanced under this section for construction and construction engineering on an IRR project prior to approval of a PS&E for the project.

May an Indian Tribe or Consortia Receive Advance Payments of IRR Funds Under a Self-Governance Agreement?

Yes. Advance payments must be made to an Indian tribe in annual or semi-annual installments at the discretion of the tribe. Advance payments shall be made to the tribe in the amount established by the IRR funding formula. Within 21 days after apportionment, BIA shall transfer all IRR funds advanced under this section to the Office of Self-Governance for prompt payment to the tribe or consortia. Indian tribes may not expend funds advanced under this section for IRR activities that are not included on an approved IRR TIP.

At a minimum, the advance payment of IRR funds to Indian tribal governments must conform to the strict mandates of TEA–21 and the ISDEAA and its implementing regulations. Title I of the ISDEAA generally provides that ''[u]pon the approval of the self-determination contract, the Secretary shall add to the contract the full amount of funds to which the contractor is entitled.'' 25 U.S.C. 450j–1(f); see also 25 CFR 900.19. Title IV of the ISDEAA requires that self-governance compacts and annual funding agreements ''shall provide for advance payments to the tribes in the form of annual or semiannual installments at the discretion of the tribes.'' 25 U.S.C. 458cc(g)(2).

However, the Title I self-determination regulations contain a special advance funding provision for construction contracts which requires that BIA provide advance funding to tribes performing construction contracts on at least a quarterly basis. See 25 CFR 900.132. In other words, quarterly advance payments are the minimum amounts authorized by law for self-determination construction contracts, but BIA and contracting tribes may negotiate an advance payment schedule on terms even more favorable to the tribes, based on the factors listed in the regulation.

It makes sense to transfer scarce IRR funds into an Indian tribe's IRR Program account as soon as possible so that the money can begin drawing interest and the tribe can better manage IRR planning, design, construction, and maintenance activities. These IRR regulations should promote sensible economic practices and, wherever possible, maximize the benefits of scarce IRR funding for the Indian people the IRR Program is intended to serve. There are many statutory and accounting protections in place, up to and including the threat of criminal prosecution, which act to prevent tribes from misusing advance payments. Self-determination and self-governance tribes have been receiving lump sum advance payments for years to do everything from running hospitals to operating housing programs. There is nothing special or different about the IRR Program which suggests tribes cannot be trusted to behave appropriately when building or maintaining their IRR road systems.

Throughout these negotiations, the Tribal Caucus has sought to clarify that BIA is authorized—and, in the case of self-governance agreements, required—to make advance payments of IRR funds to Indian tribal governments in annual, semiannual or quarterly installments, at the discretion of the tribe. Therefore, the Tribal Caucus believes that the IRR regulations should authorize, in clear and simple language, the advance payment of IRR funds to Indian tribes on the terms that the tribes themselves propose. These regulations should also clarify that advanced IRR funds must be paid to tribes as soon as possible after the start of the fiscal year.

Federal View

The Federal representatives are aware of the different payment provisions contained in Titles I, II, IV, V, and section 108 of the Indian Self-Determination and Education Assistance Act, as amended. Thus, how and when advance payments are made is based on which type of document (contract, grant, agreement) is used. The Committee reached agreement on an advance payments provision for section 108.

For Title I, the Secretary is given discretion to advance funds for self-determination contracts under 25 CFR 900.132. It is the Federal view that this regulation adequately addresses advance payments for construction and construction engineering activities included in a self-determination contract. In a design/construct self-determination contract, the Federal view is that advance payments for construction and construction engineering are based on progress and need as well as the negotiated payment schedule. Advancing funds beyond that permitted in 25 CFR 900.132 is neither required nor a prudent administration of IRR Program funds. Advancing funds for construction and construction engineering prior to PS&E approval would create problems if the design of the project is never completed and construction does not begin.

Congress, in Title V provisions (which applies only to the Indian Health Service), now authorizes advance payments for construction not only based on need, but also based on expenditures.

For Title IV, the Federal view is to use the statutory language to address advance payments and use a separate provision for adjusting for additional funds. In addition, the Federal proposal is consistent with 23 U.S.C. 204(j). Also, 25 CFR 1000.104 already contains procedures for adjusting funding amounts negotiated in an agreement

during the year it is in effect. The Federal representatives see no reason to develop an alternative process.

The Federal proposal is as follows:

May the Secretary Advance Payments of IRR Funds to a Tribe Under a Self-Determination Contract for Construction Activities?

Yes. The Secretary and the tribe must negotiate a schedule of advance payments as part of the term of a self-determination contract in accordance with 25 CFR 900.132.

What Is a Design/Construct IRR Self-Determination Contract?

It is a self-determination contract which includes both the design and construction of one or more IRR projects.

May the Secretary Advance Payments of IRR Funds to a Tribe Under a Self-Determination Design/Construct Contract for Construction Activities?

Yes. When making at least quarterly advance payments for construction and construction engineering, the Secretary includes IRR Program funds based on progress, need, and the payment schedule negotiated under 25 CFR 900.132.

May the Secretary Advance Payments of IRR Funds to a Tribe or Consortia Under a Self-Governance Agreement?

Yes. Advance payments must be made to the tribes/consortia in the form of annual or semiannual installments as indicated in the agreement.

How Are Advance Payments Made When Additional IRR Funds Are Made Available After Execution of the Self-Governance Agreement?

When additional IRR funds are available, following the procedures set forth in 25 CFR 1000.104, tribes can request to use the additional funds for approved IRR activities or projects contained in a subsequent year of FHWA-approved IRR TIP, and immediately have those funds added to the agreement.

K. Contractibility and Compactibility of TEA–21 Programs—Subpart E

The disagreements under contractibility and compactibility involve use of the ''up to 6%'' management funds. The Federal questions and answers are inserted at §§ 170.600 through 170.636.

Tribal View

The Tribal and Federal Caucuses strongly disagree on several issues related to the contractibility/compactibility of TEA–21 programs and funds: (1) Exactly what functions are contractible/compactible by tribes, and, generally, how is contractibility/compactibility under the ISDEAA to be determined? (2) Are programs and funds associated with the ''6 percent funds'' contractible/compactible under the ISDEAA? (3) May BIA reserve, up front, 6 percent of the Federal Highway Trust Fund for ''non-contractible'' administrative functions and activities, thereby rendering such funds automatically unavailable to the tribes? (4) May the 6 percent administrative funds be utilized to fund IRR Program Management Systems and public hearings for IRR planning and projects?

In connection with the first three of these questions the tribal team proposed a series of nine questions-and-answers as follows:

What IRR Program Functions May Be Assumed by an Indian Tribe in a Self-Determination or Self-Governance Agreement?

At the option of a tribe, all IRR functions, including those associated with BIA's 6 percent administrative funds, other than inherent federal functions, may be included in a self-determination contract or self-governance agreement.

What Is an Inherently Federal Function?

An inherently Federal function is a Federal function that cannot legally be transferred to a self-determination and self-governance tribe.

How Will BIA and a Tribe Determine Which IRR Program Functions May Be Included in a Self-Determination or Self-Governance Agreement?

(a) At the request of a tribe, BIA and the tribe will jointly identify all of the IRR Program functions that are part of or support the program, function, service or activity, or portion thereof, which a tribe might wish to assume. BIA shall also identify an estimated cost to accompany each of the identified functions.

(b) BIA shall provide the requested information to the tribe in writing no later than 30 days after receipt of the request.

(c) BIA shall also identify which of these functions it believes are inherently federal functions, with the rationale to support its conclusion.

(d) BIA will meet with and negotiate with the tribe the cost of the identified assumable functions. BIA and the tribe shall also seek to reach agreement about which functions are appropriately considered inherently federal.

(e) BIA shall maintain and update a list of all IRR Program functions which Indian tribes assume under Title I or IV of Public Law 93–638, as amended. BIA shall distribute this list to each of the BIA Regional Offices and it shall be available for review by an interested tribe.

What Happens if a Tribe Disagrees With BIA That a Specific Function Is Inherently Federal?

Disagreement over what is an inherent federal function shall be dealt with in accordance with the dispute resolution processes set out in 25 CFR 900.150 *et seq.* or self-determination contracts and 25 CFR 1000.95 and 1000.420 *et seq.* for self-governance agreements.

What IRR Funds Must Be Transferred to a Tribe Under a Self-Determination Contract or Self-Governance Agreement?

At the option of the tribe, the Secretary must provide a tribe all funds, including an appropriate portion of the up to 6 percent administrative funds that BIA is authorized to retain under TEA–21, that are specifically or functionally related to BIA providing IRR functions to the tribe without regard to the organizational level within BIA where such functions are carried out. The only funds that the Secretary is not obligated to transfer to a tribe are residual funds.

What Are BIA Residual Funds?

BIA residual funds are the funds necessary to carry out BIA's inherent Federal functions.

How Is BIA's Residual Determined?

(a) Generally, residuals will be determined through a process that is consistent with the overall process used by BIA and in consultation with tribes. Residual information will consist of residual functions performed by BIA, a brief justification why the function is not contractible or compactible, and the estimated funding level for each residual function. Each Regional Office and the Central Office will compile a single document for distribution each year that contains all the residual information of that respective office. The development of the residual information will be based on the following principles. BIA will:

(1) Develop uniform residual information to be used to negotiate residuals;

(2) Ensure functional consistency throughout BIA in the determination of residuals;

(3) Make the determination of residuals based upon the functions actually being performed by BIA without regard to the organizational level to which the functions are being performed;

(4) Annually consult with tribes on a region-by-region basis as requested by tribes/consortia; and

(5) Notify tribal leaders each year by March 1 of the availability of residual information.

(b) BIA shall use the residual information determined under subparagraph (a) as the basis for negotiating with individual tribes.

(c) If BIA and a participating tribe/consortium disagree over the content of residual functions or amounts, a participating tribe/consortium may request the Deputy Commissioner to reconsider residual levels for particular programs.

(1) The Deputy Commissioner must make a written determination on the request within 30 days of receiving it;

(2) The tribe/consortium may appeal the Deputy Commissioner's determination to the Assistant Secretary—Indian Affairs;

(3) The decision by the Assistant Secretary Indian Affairs is final for the Department.

(d) Information on residual functions may be amended if IRR Program functions are added or deleted, if statutory or final judicial determinations mandate, or if the Deputy Commissioner makes a determination that would alter the residual information or funding amounts.

May a Tribe/Consortium Finalize Negotiation of a Self-Determination Contract and Self-Governance Agreement Pending an Appeal of Residual Functions or Amounts?

Yes. Pending appeal of a residual function or amount, any tribe may decide to include funds in a contract or agreement using the residual information that is being appealed. The residual information will be subject to later adjustment based on the final determination of a tribe's appeal.

What Happens if a Tribe Disagrees With BIA About the Funding It Is Entitled To Be Paid?

Unless otherwise provided above, disagreements over the amount of funds that must be included in a contract or agreement shall be dealt with in accordance with the dispute resolution processes set out in 25 CFR 900.150 *et seq.* for self-determination contracts and 25 CFR 1000.95 and 1000.420 *et seq.* for self-governance agreements.

The Fiscal Year 1999 Omnibus Consolidated Appropriations Act provides that ''*not to exceed* 6 percent of contract authority available to the Bureau of Indian Affairs from the Federal Highway Trust Fund *may be* used to cover the road program management costs of the Bureau * * *.'' (Emphasis added.) The argument that this language permits BIA to automatically withhold 6 percent of these funds from tribes is flawed. First, the phrase ''not to exceed 6 percent'' makes it clear that Congress did not intend to grant BIA 6 percent of the funding for its administrative activities. Rather, Congress intended to grant the Bureau the funds that it needed for such activities, up to 6 percent. ''Not to exceed 6 percent'' implies not a grant of funds to BIA but rather a ceiling on the amount of funds that the agency is permitted to use for road program management costs. In light of the goals and purposes of the ISDEAA, it is logical that Congress would choose to impose a ceiling upon BIA's use of funds, intending that as much funding as possible be available to go directly to the tribes. Finally, the word ''may'' confirms that Congress had no intention of setting aside these funds exclusively for road program management costs.

Even to the extent that these funds are used for administrative costs, the statute does not even hint at the notion of ''non-contractibility.'' While the Federal Caucus contends that the 6 percent funds are reserved for and by BIA for non-contractible functions, the Omnibus Act imposes and the ISDEAA and TEA–21 permit no such priority. ''Road program management costs'' are not non-contractible by definition. In light of the fact that 23 U.S.C. 202(d)(3)(B) exists to clarify the fact that BIA administrative costs may be contracted or compacted by tribes, there is no reason to believe that Congress intended to earmark these ''up-to-6 percent'' funds for non-contractible activities at all, and it certainly could not have intended to earmark them exclusively for non-contractible activities.

In the end, the most powerful testament to Congress' intent that the ''up-to-6 percent'' administrative funds be available to tribes on the same basis as all other funds is the statement of Senator John McCain, who worked on both the ISDEAA and on TEA–21. On March 10, 1998, Senator McCain testified regarding an amendment to ''ISTEA'' (the former name for TEA–21) that was almost identical to the current Act's modified section 202(d)(3)(A). The purpose of Senator McCain's testimony was to speak out against the possibility that ''up to 6 percent of the Indian ISTEA funds will continue to be diverted to pay for a BIA bureaucracy * * * Congress has been trying to curb BIA bureaucracy and support tribal autonomy ever since 1975 when it first enacted the Indian Self-Determination Act, known as Public Law 93–638.'' Senator McCain further testified as follows:

> In the 1994 amendments to Public Law 93–638, the Congress intended to apply these authorities to all funds administered by BIA, *including ISTEA funds transferred to BIA from the Department of Transportation for the benefit of Indian roads and bridges.* [However, d]espite our clear references in Committee report and floor language that this was our intent, BIA has refused tribal efforts to fully subject all ISTEA funds to Public Law 93–638. This issue has consumed hundreds of hours of federal-tribal negotiations since 1994 * * *. ISTEA is the last major BIA account which BIA continues to protect as immune from the reach of tribal requests under Public Law 93–638 to obtain a direct transfer of the full tribal share of these funds * * *. *[W]e in Congress intended the 1994 amendments to Public Law 93–638 to apply to ISTEA funds transferred to BIA from the Department of Transportation.* They were to be treated like all other funds administered by BIA—if a tribe wanted to obtain its full share of funds directly, in a flexible and accountable contract or compact, it could do so. [Emphasis added.]

Can the ''up-to-6 percent'' administrative funds be used to fund IRR Program Management Systems and public hearings for IRR planning and projects? Two points of contention that have arisen serve to underscore the disagreement on these issues. Specifically, the Tribal and Federal Caucuses disagree as to whether the 6 percent funds may be used to fund IRR Program Management Systems and public hearings for IRR planning and projects. It is the tribal position that both of these activities are the types of administrative functions for which the use of 6 percent administrative funds by a contracting or compacting tribe is perfectly appropriate.

In order to implement its views on these issues the Tribal Caucus proposed the following provisions:

How Are Public Hearings for IRR Planning and Projects Funded?

Transportation planning public hearings are funded by 2 percent planning or 6 percent administrative funds. Project public hearings are funded by construction funds.

How Are IRR Program Management Systems Funded?

IRR Program management systems shall be funded out of BIA's 6 percent.

How Will The IRR Management Systems Be Implemented?

A nationwide management system will be maintained and implemented by BIA Division of Transportation using IRR Program management funds. BIA Regional Offices will provide the database information for this nationwide system. Tribes may collect and provide this information in accordance with the terms of a self-determination contract or self-governance agreement.

23 U.S.C. 202(d)(3)(A), as modified by TEA–21, explicitly authorizes contracting and compacting tribes to receive funding for, and carry out, programs ''specifically or functionally related to the cost of planning, research, engineering, and construction'' that would otherwise be carried out by the Federal Government. Both IRR management systems and public hearings to plan for the implementation of IRR projects are clearly ''related to the cost of planning, research, engineering, and construction'' under TEA–21.

Section 202(d)(3)(B) specifically clarifies the fact that such funds

are to include those necessary for the carrying-out of administrative functions: ''Funds for programs, functions, services, and activities, or portions thereof, including supportive administrative functions that are otherwise contractible * * *. shall be paid in accordance with subparagraph (A) * * *.'' Both public hearings and management systems are ''supportive administrative functions'' within the purview of this section.

Neither management systems nor public hearings are precluded from being contracted under the above-noted provisions, which reserve funds for functions that are ''otherwise contractible.'' The regulations for Title I of the ISDEAA define a non-contractible function as one that ''includes activities that cannot be lawfully carried out by the contractor.'' (25 CFR 900.22(e)). Other than illegal activities, such functions are limited to those that are

''inherently Federal''—i.e., either constitutionally non-delegable or necessarily vested in federal employees per the DOI Solicitor's Opinion. Because neither management systems nor public hearings are ''inherently Federal,'' neither activity is inherently non-contractible.

Neither management systems nor public hearings may be defined up front in these regulations as ''non-contractible.'' Rather, their contractibility must be determined on a case-by-case basis. The regulations for Title IV of the ISDEAA definitively institute this requirement:

The Department will decide what functions are * * * inherently Federal on a case-by-case basis after consultation with the Office of the Solicitor. The Solicitor has ruled that inherently Federal functions cannot be defined and must be determined on a case-by-case basis * * *. (65 FR 78690, Dec. 15, 2000).

Finally, so long as these activities are contractible/compactible to tribes, the 6 percent administrative funds are available to tribes for carrying them out. It is clear from the legislative history that Congress intended the ''up-to-6 percent administrative funds'' transferred from the Department of Transportation to BIA to be wholly available to contracting and compacting tribes. Thus, because neither of the activities in dispute may be defined as ''inherently Federal,'' and because both are legally contractible, tribes are not only legally entitled to pay for them out of the 6 percent administrative funds, but both the ISDEAA and TEA–21 actually mandate that these funds be made available to tribes for that very purpose.

Federal View

The Federal Caucus believes that the issue of program management financing is a policy matter between BIA and FHWA. BIA is an agency within DOI. Unlike other program areas within BIA, BIA's Division of Transportation (BIA DOT) has no general appropriations through DOI for administering the IRR Program. All of BIA DOT's funding for administration of the IRR Program comes from the Highway Trust Fund. BIA DOT's only source of funds to carry out its responsibilities is the ''not to exceed 6 percent'' of the total funds transferred from FHWA to BIA DOT for program management and oversight. The Federal list of IRR Program management activities is set forth in this section. All of this work is performed by BIA DOT central or regional offices. Costs for this work comes from the ''not to exceed 6 percent'' funds FHWA transfers to BIA DOT.

By way of background, since fiscal year 1990, BIA annual construction appropriation has provided that ''not to exceed 6 percent of the contract authority available to BIA from the Federal Highway Trust Fund may be used to cover the *road program management costs* of the Bureau.'' (Emphasis added.) On December 28, 1999, in written response to questions presented by the Senate Committee on Indian Affairs, the Assistant Secretary—Indian Affairs stated that this 6 percent limitation applies only to the management and oversight activities associated with non-project functions and that the 6 percent limitation does not apply to project-related costs of the IRR Program. This statement affirmed the longstanding BIA policy to use the 6 percent management and oversight funds to carry out the Federal Government's oversight and trust responsibilities associated with the IRR Program.

Congress has not further defined the term ''road program management costs'' in the Department of Interior Annual Appropriation Acts. However, in a 1997 survey of state non-project expenditures, FHWA determined that States spent approximately 5.5 percent of their general funds for non project-related program management costs to administer the Federal-aid construction program. Accordingly, BIA has used the 6 percent for non-project related costs in a manner consistent with the states' expenditures. BIA determined that because the States did not charge non-project expenditures to a specific project, the 6 percent road program management costs should similarly be limited to non-project related program management expenditures.

In an opinion to the General Accounting Office dated July 12, 2000, the former Department of the Interior Solicitor concluded that FHWA's and BIA's administrative use of the term ''road program management funds'' is reasonable. The General Accounting Office concurred in this opinion in a report dated August 14, 2000.

There is also statutory support for this interpretation. Title 23 U.S.C. 202 (d)(3)(B) states that only funds for programs, functions, services or activities or portions thereof, including supportive administrative functions that are otherwise contractible, shall be paid to tribes. The Federal Government has interpreted this provision to mean that all noncontractible activities in the IRR Program have to be funded using either the 6 percent program management funds or project funds. In short, Congress has directed the Secretary to use a percentage of the IRR funds to carry out these program management activities.

It is also important for the integrity and effective administration of the IRR Program that the use of program management funds be consistent throughout the twelve BIA regions. To negotiate a new list administrative responsibilities for each self-determination contract or self-governance agreement is inefficient and generates unnecessary costs to both tribes and

BIA. Moreover, to have a list of noncontractible items is consistent with 25 CFR 1000.243 under which the agreement must specify the services to be provided, the work to be performed, and the responsibilities of the tribe and the Secretary.

BIA has never viewed the 6 percent program management costs as a ceiling to use the entirety of these funds. Clearly, since the DOI Appropriations Act establishes an upper limit of 6 percent, BIA is obligated to make the remaining funds available for construction. It has been the Secretary of Interior's and the Secretary of Transportation's longstanding practice to maximize the amount of IRR funding for construction activities by redistributing the unused portion of the 6 percent funds to projects at the regional level.

Project-Related Management Costs

BIA receives funds for project-related management expenses from the Highway Trust Fund rather than from BIA's annual appropriations for operating Indian programs or for construction. FHWA funds projects based on its approval of a Transportation Improvement Program (TIP). See 23 U.S.C. 204(a)(3). Based on FHWA-approved TIPS, FHWA allocates funds to BIA for IRR Program activities. The applicable statute, 23 U.S.C. 204(b), states that project-related costs are eligible for IRR funding. ''Funds available for * * *. Indian reservation roads shall be used by the Secretary * * * to pay for the cost of transportation planning, research, engineering, and construction of the highways, roads, and parkways * * *.''

Neither BIA annual road maintenance appropriation nor BIA construction appropriation account may be used for IRR construction. Therefore, BIA has no discretion to use these funds to manage the IRR (Highway Trust Fund) construction program. See *Principles of Federal Appropriations,* Second Edition, Chapter Two, Part B, 1991 WL 645709, ''If a specific appropriation

exists for a particular item, then that appropriation must be used and it is improper to charge the more general appropriation.''

Finally, the Secretary remains responsible for ensuring that health and safety standards are met on all IRR construction projects. For example, those projects administered by self-governance tribes are subject to the requirements of section 403 (e)(2) of Public Law 93–638, which provides ''[i]n all construction projects performed pursuant to this part, the Secretary shall ensure that proper health and safety standards are provided for in the funding agreements.'' Since the only funds available for IRR projects come from the IRR Program, 25 CFR 1000.256 directs that the Secretary must retain project funds to ensure proper health and safety standards in construction projects.

In addition, 25 CFR 900.131 and 1000.256 outlines additional requirements that the Secretary must perform in order to ensure health and safety, such as approving construction standards and monitoring design and construction. This includes the Secretary's monitoring for health and safety not only during the design phase, but also during actual construction and the review of the construction plans and specifications.

The Federal proposal is as follows:

What IRR Program Functions May Be Assumed by a Tribe in a Self-determination Contract or Self-Governance Agreement?

All IRR functions and activities that are otherwise contractible may be included in a self-determination contract or self-governance agreement. (23 U.S.C. 202(d)(3)(B)).

What IRR Project and Program Functions Are Not Otherwise Contractible?

The following IRR functions or activities are non-contractible:

(a) IRR project-related pre-contracting activities:

(1) Notifying tribes of available funding including the right of first refusal; and

(2) Providing technical assistance.

(b) IRR project-related contracting activities:

(1) Providing technical assistance;

(2) Reviewing all scopes of work (25 CFR 900.122);

(3) Evaluating proposals and making declination decisions, if warranted;

(4) Performing declination activities;

(5) Negotiating and entering into contracts or agreements with state, tribal, and local governments and other Federal agencies;

(6) Processing progress payments or contract payments;

(7) Approving contract modifications;

(8) Processing claims and disputes with tribal governments; and

(9) Closing out contracts or agreements.

(c) Planning activities:

(1) Reviewing IRR transportation improvement programs developed by tribes or other contractors;

(2) Reviewing IRR long-range transportation plans developed by tribes or other contractors; and

(3) Performing other Federal responsibilities identified in the IRR Transportation Planning Procedures and Guidelines manual.

(d) Environmental and historical preservation activities:

(1) Reviewing and approving all items required for environmental compliance; and

(2) Reviewing and approving all items required for archaeological compliance.

(e) Processing rights-of-way:

(1) Reviewing rights-of-way applications and certifications;

(2) Approving rights-of-way documents;

(3) Processing grants and acquisition of rights-of-way requests for tribal trust and allotted lands under 25 CFR 169;

(4) Responding to information requests;

(5) Filing Affidavit of Completion Forms; and

(6) Performing custodial functions related to storing right-of-way documents.

(f) Conducting project development and design under 25 U.S.C. 900.131:

(1) Participating in the plan-in-hand reviews as facility owner;

(2) Reviewing and/or approving plans, specifications, and cost estimates (PS&E's) for health and safety assurance as facility owner;

(3) Reviewing PS&E's to assure compliance with all other Federal laws; and

(4) Reviewing PS&E's to assure compliance with or exceeding Federal standards for IRR design and construction.

(g) Construction:

(1) Making application for clean air/clean water permits as facility owner;

(2) Ensuring that all required state/tribal/Federal permits are obtained;

(3) Performing quality assurance activities;

(4) Conducting value engineering activities as facility owner;

(5) Negotiating with contractors on behalf of Federal Government;

(6) Approving contract modifications/change orders;

(7) Conducting periodic site visits;

(8) Performing all Federal Government required project-related activities contained in the contract documents and required by 25 CFR parts 900 and 1000;

(9) Conducting activities to assure compliance with safety plans as a jurisdictional responsibility (hazardous materials, traffic control, OSHA, etc.);

(10) Participating in final inspection and acceptance of project documents (as-built drawings) as facility owner; and

(11) Reviewing project closeout activities and reports.

(h) Other activities:

(1) Performing other non-contractible required IRR project activities contained in this part, part 900 and part 1000; and

(2) Other Title 23 non-project-related management activities.

(i) BIA Division of Transportation program management:

(1) Developing budget on needs for the IRR Program;

(2) Developing legislative proposals;

(3) Coordinating legislative activities;

(4) Developing and issuing regulations;

(5) Developing and issuing IRR planning, design, and construction standards;

(6) Developing/revising interagency agreements;

(7) Developing and approving IRR stewardship agreements in conjunction with FHWA;

(8) Developing annual IRR obligation and IRR Program accomplishments reports;

(9) Developing reports on IRR project expenditures and performance measures for the Government Performance and Results Act (GPRA);

(10) Responding to/maintaining data for congressional inquiries;

(11) Developing and maintaining funding formula and its database;

(12) Allocating IRR Program and other transportation funding;

(13) Providing technical assistance to tribe/tribal organizations/agencies/regions;

(14) Providing national program leadership for: National Scenic Byways Program, Public Lands Highways Discretionary Program, Transportation Enhancement Program, Tribal Technical Assistance Program, Recreational Travel and Tourism, Transit Program, ERFO Program, Presidential initiatives (Millennium Trails, Lewis & Clark, Western Tourism Policy Group);

(15) Participating in and supporting tribal transportation association meetings such as the Intertribal Transportation Association regional and national meetings;

(16) Coordinating with and monitor Tribal Technical Assistance Program centers;

(17) Planning, coordinating, and conducting BIA/tribal training;

(18) Developing information management systems to support consistency in data format, use, etc., with the Secretary of Transportation for the IRR Program;

(19) Participating in special transportation related workgroups, special projects, task forces and meetings as requested by tribes;

(20) Participating in national transportation organizations, such as the Western Association of State Highway and Transportation Officials, American Association of State Highway and Transportation Officials, National Association of County Engineers, and Transportation Research Board;

(21) Participating in and supporting FHWA Coordinated Technology Improvement program;

(22) Participating in national and regional IRR Program meetings;

(23) Consulting with tribes on non-project related IRR Program issues;

(24) Participating in IRR Program, process, and product reviews;

(25) Developing and approve national indefinite quantity service contracts;

(26) Assisting and supporting the IRR Coordinating Committee;

(27) Processing IRR Bridge program projects and other discretionary funding applications or proposals from tribes;

(28) Coordinating with FHWA;

(29) Performing stewardship of the IRR Program;

(30) Performing oversight of the IRR Program and its funded activities; and

(31) Performing any other non-contractible IRR Program activity included in this part.

(j) BIA DOT Planning:

(1) Maintaining the official IRR inventory;

(2) Reviewing long-range transportation plans;

(3) Reviewing and approving IRR transportation improvement programs;

(4) Maintaining nationwide inventory of IRR strip and atlas maps;

(5) Coordinating with tribal/state/regional/local governments;

(6) Developing and issuing procedures for management systems;

(7) Distributing approved IRR transportation improvement programs to BIA regions;

(8) Coordinating with other Federal agencies as applicable;

(9) Coordinating and processing the funding and repair of damaged Indian reservation roads with FHWA;

(10) Calculating and distributing IRR transportation planning and Atlas mapping funds to BIA regions;

(11) Reprogramming unused IRR transportation planning and Atlas mapping funds at the end of the fiscal year;

(12) Monitoring the nationwide obligation of IRR transportation planning and Atlas mapping funds;

(13) Providing technical assistance and training to BIA regions and tribes;

(14) Approving Atlas maps;

(15) Reviewing IRR inventory information for quality assurance; and

(16) Advising BIA regions and tribes of transportation funding opportunities.

(k) BIA DOT engineering:

(1) Participating in the development of design/construction standards with FHWA;

(2) Developing and approving design/construction/maintenance standards;

(3) Conducting IRR Program/product reviews; and

(4) Developing and issuing criteria for pavement and congestion management systems.

(*l*) BIA DOT responsibilities for bridges:

(1) Maintaining BIA National Bridge Inventory information/database;

(2) Conducting quality assurance of the bridge inspection program;

(3) Reviewing and processing IRR Bridge program applications;

(4) Participating in second level review of IRR bridge PS&E; and

(5) Developing criteria for bridge management systems.

(m) BIA DOT responsibilities to perform other non-contractible required IRR Program activities contained in this part;

(n) BIA regional offices program management:

(1) Designating IRR system roads;

(2) Notifying tribes of available funding;

(3) Developing state IRR transportation improvement programs;

(4) Providing FHWA-approved IRR transportation improvement programs to tribes;

(5) Providing technical assistance to tribes/tribal organizations/agencies;

(6) Funding common services as provided as part of the region/agency/BIA Division of Transportation IRR costs;

(7) Processing and investigating non-project related tort claims;

(8) Preparing budgets for BIA regional and agency IRR Program activities;

(9) Developing/revising interagency agreements;

(10) Developing control schedules/Transportation Improvement Programs;

(11) Developing regional IRR stewardship agreements;

(12) Developing quarterly/annual IRR obligation and program accomplishments reports;

(13) Developing reports on IRR project expenditures and performance measures for Government Performance and Results Act (GPRA);

(14) Responding to/maintaining data for congressional inquiries;

(15) Participating in Indian transportation association meetings such as Intertribal Transportation Association regional and national meetings;

(16) Participating in Indian Local Technical Assistance Program (LTAP) meetings and workshops;

(17) Participating in BIA/tribal training development (highway safety, work zone safety, etc.);

(18) Participating in special workgroups, task forces, and meetings as requested by tribes (tribal members and BIA region/agency personnel);

(19) Participating in national transportation organizations meetings and workshops;

(20) Reviewing Coordinated Technology Improvement program project proposals;

(21) Consulting with tribal governments on non-project related program issues;

(22) Funding costs for common services as provided as part of BIA IRR region/agency/contracting support costs;

(23) Reviewing and approving IRR Atlas maps;

(24) Processing Freedom of Information Act (FOIA) requests;

(25) Monitoring the obligation and expenditure of all IRR Program funds allocated to BIA region;

(26) Performing activities related the application for ERFO funds, administration, and oversight of such funds; and

(27) Participating in IRR Program, process, and product reviews.

(o) BIA DOT regional offices planning:

(1) Coordinating with tribal/state/regional/local government;

(2) Coordinating and processing the funding and repair of damaged Indian reservation roads with tribes;

(3) Reviewing and approving IRR Inventory data;

(4) Maintaining, reviewing, and approving the management systems databases;

(5) Reviewing and approving IRR state transportation improvement programs; and

(6) Performing Federal responsibilities identified in the IRR Transportation Planning Procedures and Guidelines manual.

(p) BIA DOT regional offices engineering:

(1) Approving tribal standards for the IRR Program use;

(2) Developing and implementing new engineering techniques in the IRR Program; and

(3) Providing technical assistance.

(q) BIA DOT regional offices responsibilities for bridges:

(1) Reviewing and processing IRR bridge program applications;

(2) Reviewing and processing IRR bridge inspection reports and information; and

(3) Ensuring the safe use of roads and bridges.

(r) BIA DOT regional offices other responsibilities for performing other non-contractible required IRR Program activities contained in this part.

How Are the IRR Non-Contractible Program and Project Functions Funded?

(a) All non-contractible program functions are funded by IRR Program management and oversight funds; and

(b) All non-contractible project functions are funded by the IRR project construction funds.

May Tribes Include the Cost for Contractible Supportive Administrative Functions in Their Budgets?

Yes. Tribes may use IRR project funds contained in their contracts or annual funding agreements for contractible supportive administrative functions.

How Does BIA Determine the Amount of Funds Needed for Non-Contractible Non-Project Related Functions?

Each fiscal year the Secretary will develop a national and regional BIA IRR Program budgets. Within the first quarter of each fiscal year the Secretary will send a copy of the national IRR budget and BIA regional IRR budget to all tribes.

Are the Unused IRR Program Management Funds Reserved by the Secretary Considered Residual Funds?

No. The unused IRR Program management funds reserved by the Secretary are not considered residual funds.

What Happens to the Unused Portion of IRR Program Management Funds Reserved by the Secretary?

Any unused IRR Program management funds are distributed to BIA regions using the IRR Relative Need Formula and are used for additional construction activities.

Management Systems

It is appropriate for BIA to use IRR Program management funds for developing nationwide management systems because all tribes benefit. Using these funds for developing individual tribal management systems is not appropriate since only one tribe benefits. Data collection for management systems is basically a transportation planning activity and thus should be funded using either the 2 percent IRR tribal transportation planning or IRR construction funds.

The Federal proposal is as follows:

How Are IRR Program Management Systems Funded?

BIA funds IRR Program management systems to develop the nationwide IRR

Program management systems. If a tribe elects not to use the nationwide system, it may develop a tribal management system using the 2 percent IRR tribal transportation planning or IRR construction funds.

How Will the IRR Management Systems Be Implemented?

BIA Division of Transportation (BIA DOT) implements and maintains nationwide IRR management systems using IRR Program management funds. For direct service tribes that chose not to contract, BIA regional offices will provide the database information for these nationwide systems using IRR construction funds. A tribe may collect and must provide this information to the BIA regional office using IRR construction funds or 2 percent IRR tribal transportation planning funds under a self-determination contract or self-governance annual funding agreement.

Public Hearings

Funding for public hearings during project planning processes differs for tribes and for BIA. It is appropriate for tribes to use the 2 percent IRR tribal transportation planning funds or IRR construction funds for public hearings during the project planning process since conducting public hearings for approval of a long-range plan or TIP is part of the transportation planning process. BIA cannot use the 2 percent IRR tribal transportation planning funds, so IRR construction funds are the only funds available for it to use to conduct public hearings. Conducting public hearings during design of construction projects is a project related activity; therefore IRR construction funds should be used to pay for these hearings.

The Federal proposal is as follows:

How Are Public Hearings for IRR Planning and Projects Funded?

Public hearings for IRR planning and projects are funded as follows:

(a) Public hearings for IRR planning:

(1) Public hearings for TIPS and long-range transportation plans conducted by tribes are funded using the 2 percent IRR transportation planning or IRR construction funds; and

(2) Public hearings for the IRR TIP and long-range transportation plans conducted by BIA are funded using IRR construction funds.

(b) Public hearings for IRR projects conducted by either tribes or BIA are funded using IRR construction funds.

L. Availability of Contract Support Funding—Subpart E

The issue is how contract support funds are made available to tribes under self-determination contracts and self-governance agreements. The Federal text is inserted at § 170.635–636.

Tribal View

The Tribal Caucus believes that contract support funding should be made available under self-determination contracts and self-governance agreements in a manner consistent with the ISDEAA. Currently, the Interior Department is required to make contract support funding available for such contracts and agreements in accordance with sections 106(a) and 403 of the ISDEAA. However, the Interior Department has not extended this requirement to IRR Program activities assumed under such contracts and agreements.

The Tribal Caucus proposes the following regulatory provision to clarify that contract support costs funds are to be included for IRR Program activities assumed under self-determination contracts and self-governance agreements.

Are Contract Support Funds Available for IRR Program Activities Performed Under Public Law 93–638 Contracts?

Yes, in accordance with sections 106(a)(3) and 403 of Public Law 93-638 contract support funds are available.

Federal View

It is the position of the Federal Caucus that the issue of contract support funding is not appropriate for inclusion in this rule or for public comment since this is a matter in litigation.

The Federal view is that contract support costs are an eligible item for IRR Program funding and need to be included in the cost estimates submitted by tribes. Thus, contract support costs may be paid from IRR Program funds. Contract support funds are also provided in the Secretary's appropriations. The Secretary's appropriations are not available for DOT's IRR Program, which is a separate appropriation.

The Federal proposal is as follows:

Are Contract Support Funds Provided in Addition to the 2 Percent (2%) IRR Transportation Planning Funds?

Contract support costs are an eligible item out of the tribes' IRR Program funds allocation and need to be included in a tribe's budget.

May Contract Support Costs for IRR Construction Projects Be Paid Out of Department of the Interior or BIA Appropriations?

No.

M. Savings—Subpart E

The issue is whether tribes performing under self-determination contracts or self-governance agreements may keep savings. The Federal text is inserted at § 170.620.

Federal View

The Federal Caucus believes this issue has been resolved by legislation and is therefore not an appropriate area for public comment or inclusion in this rule.

Congress changed the provision in Public Law 93–638 regarding savings in 1998 to read as follows:

''Beginning in fiscal year 1998, and thereafter, where the actual costs of construction projects under self-determination contracts, compacts, or grants, pursuant to Public Law 93–638, 103–413, or 100–297, are less than the estimated costs thereof, use of the resulting excess funds shall be determined by the appropriate Secretary after consultation with the tribes.''

Thus, the Federal proposal is as follows:

Can Indian Tribes and Tribal Organizations Performing Under Self-determination Contracts of Self-governance Agreements Keep Savings That Result From Their Administration of IRR Projects or an Entire Tribal IRR Program?

Pursuant to 25 U.S.C. 450e-2, where the actual costs of the contracts or agreements for construction projects are less than the estimated costs, use of the resulting excess funds shall be determined by the Secretary after consultation with the tribes.

Tribal View

The Tribal Caucus' view is that this question and answer improperly limit a tribe's discretion to use savings associated with IRR projects or programs. The Federal Caucus' question and answer are narrowly drafted based on 25 U.S.C. 450e-2, which provides that, for construction projects whose actual costs are less than the estimated costs, the Secretary is to determine how to use the excess funds after consulting with the tribes. There are several problems with the Federal proposal to use this statutory language as the basis for a question-and-answer limiting a tribe's or tribal organization's ability to use savings.

First, this statutory language is focused on construction projects and does not address non-construction IRR activities. Thus, savings from non-construction activities are not subject to the Secretary's discretion as to how they can be used.

Second, this statutory provision was included as a rider to an Interior and Related Agencies Appropriation Act in 1998 and thus applies only to funds appropriated under that Act, not to funds appropriated under TEA–21 or under the Department of Transportation's appropriations.

Third, the legislative history discussing this provision clarifies that it was intended to apply to funds appropriated by Congress for school construction activities, all of which are

appropriated under the Department of the Interior's appropriations.

Fourth, Title I and Title IV of the ISDEAA contain provisions that provide tribes and tribal organizations with considerably more flexibility and control over decisions associated with savings resulting from those agreements than over the reading of 25 U.S.C. 450e-2 that the Federal Caucus has incorporated into its proposed question and answer. (See, for example, 25 U.S.C. 450j(a)(4); 450l(c)(§ 1(d)(9)). With respect to Title IV self-governance agreements, tribes may opt, in accordance with 25 U.S.C. 458cc(l), to incorporate any provision of Title I in a self-governance agreement, including provisions that allow flexibility associated with savings.

Finally, and most importantly, in the recently published regulations implementing Title IV of the ISDEAA (25 CFR part 1000), the Department of the Interior enacted the following regulation regarding savings:

Section 1000.400 Can a Tribe/Consortium Retain Savings From Programs?

Yes. For BIA programs, the tribe/consortium may retain savings for each fiscal year during which an AFA is in effect. A tribe/consortium must use any savings that it realizes under an AFA, including a construction contract:

(a) To provide additional services or benefits under the AFA; or

(b) As carryover; and

(c) For purposes of this subpart only, programs administered by BIA using appropriations made to other Federal agencies, such as the Department of Transportation, will be treated in accordance with paragraph (b) of this section.

The Tribal Caucus believes that the Department must implement a similarly flexible provision relating to savings in these regulations. Accordingly, the Tribal Caucus has proposed the following two provisions to address this issue:

Can an Indian Tribe or Tribal Organization Performing Under a Self-determination Contract or Self-governance Agreement Keep Savings That Result From its Administration of IRR Project(s) or an IRR Program?

Yes. An Indian tribe or tribal organization may retain savings for each fiscal year for which a contract or agreement is in effect. A tribe or tribal organization must use any savings that it realizes under a contract or agreement, including a construction contract or agreement:

(a) To provide additional services or benefits under the contract or agreement; or

(b) As carryover.

Can an Indian Tribe or Tribal Organization Performing Under a Self-determination Contract or Self-governance Agreement Keep Profits Resulting From the Administration of IRR Project(s) or an Entire Tribal IRR Program?

Yes. Indian tribes and tribal organizations may use without restriction profits resulting from an IRR project or program performed under a fixed-price self-determination contract or a self-governance agreement.

IV. Procedural Requirements

A. Regulatory Planning and Review (Executive Order 12866)

This proposed rule is a significant regulatory action because it will have an annual effect of $100 million or more on the economy. Funding for the IRR Program in fiscal year 2001 is $275 million and is expected to increase in future years. The Department of Transportation, FHWA, allocates funds to the Department of the Interior, Bureau of Indian Affairs. The Bureau of Indian Affairs distributes the funds to each of its 12 regions based on the existing funding formula for the benefit of tribes in each region. The Office of Management and Budget has reviewed this proposed rule under Executive Order 12866.

This proposed rule will not adversely affect in a material way the economy, productivity, competition, jobs, the environment, public health or safety, or state, local, or tribal governments or communities. This rule sets forth policies and guidelines under which Federal Lands Highway Administration, Bureau of Indian Affairs, and tribes that contract with the Bureau of Indian Affairs conduct the IRR Program. It also proposes a funding methodology for distributing IRR Program funds.

It covers current practices of DOT and DOI. DOT representatives have participated in this negotiated rulemaking, concur in all consensus items, and have provided comments on all disputed items.

This proposed rule does not alter the budgetary effects or entitlement, grants, user fees, or loan programs or the rights or obligations of their recipients.

This proposed rule raises novel legal or policy issues that are contained in the Disagreement Items section of the Preamble. It also provides policy and guidance under the Indian Self-Determination and Education Assistance Act, Public Law 93–638, and under the Transportation Equity Act for the 21st Century, Public Law 105–178, as they relate to the IRR Program which has been in effect since 1983.

B. Regulatory Flexibility Act

The Department of the Interior certifies that this document will not have a significant economic effect on a substantial number of small entities under the Regulatory Flexibility Act (5 U.S.C. 601 *et seq.*). Indian tribes are not considered to be small entities for purposes of this Act.

C. Small Business Regulatory Enforcement Fairness Act (SBREFA)

This proposed rule is a major rule under the Small Business Regulatory Enforcement Fairness Act (5 U.S.C. 804(2)) because it has an annual effect on the economy of $100 million or more. The yearly amount of IRR funds is approximately $275 million.

This proposed rule will not cause a major increase in costs or prices for consumers, individual industries, Federal, state, or local government agencies, or geographic regions. ≤ Actions under this proposed rule will distribute Federal funds to Indian tribal governments and tribal organizations for transportation planning, construction, and maintenance.

This rule does not have significant adverse effects on competition, employment, investment, productivity, innovation, or the ability of U.S.-based enterprises to compete with foreign-based enterprises.

D. Unfunded Mandates Reform Act

This proposed rule would not impose unfunded mandates as defined by the Unfunded Mandates Reform Act of 1995 (Public Law 104–4, March 22, 1995, 109 Stat. 48). This proposed rule will not result in the expenditure by State, local, and tribal governments, in the aggregate, or by the private sector, of $100 million or more in any one year (2 U.S.C. 1532).

E. Takings Implication Assessment (Executive Order 12630)

This proposed rule does not have significant ''takings'' implications. This proposed rule does not pertain to ''taking'' of private property interests, nor does it impact private property.

F. Federalism (Executive Order 12612)

This proposed rule does not have significant federalism effects because it pertains solely to Federal-tribal relations and will not interfere with the roles, rights, and responsibilities of states.

G. Civil Justice Reform (Executive Order 12988)

This proposed rule does not unduly burden the judicial system and meets the applicable standards provided in sections 3(a) and 3(b)(2) of Executive Order 12988.

H. Paperwork Reduction Act

This proposed regulation requires an information collection from 10 or more parties and a submission under the Paperwork Reduction Act of 1995, Public Law 104–13, is required. An OMB form 83–I has been reviewed by the Department and sent to the Office of Management and Budget (OMB) for approval. As part of the Department's ongoing effort to reduce paperwork burdens, the Department invites the general public to take this opportunity to comment to OMB on the information collections contained in this proposed rulemaking, as required by the Paperwork Reduction Act. Such comments should be sent to the following address: Attention—Desk Officer for the Interior Department, Office of Information and Regulatory Affairs, Office of Management and Budget, 725 27th Street, NW., Washington, DC 20503. Please also send a copy of your comments to the Department at the location noted under the heading **ADDRESSES.** OMB has up to 60 days to approve or disapprove the information collections but may respond after 30 days; therefore, public comments to OMB should be submitted within 30 days in order to assure their maximum consideration. Comments should address: (1) Whether the proposed collection of information is necessary for the proper performance of the functions of the BIA, including whether the information shall have practical utility; (2) the accuracy of the BIA's burden estimates; (3) ways to enhance the quality, utility, and clarity of the information collected; and (4) ways to minimize the burden of the collection of information on the respondents, including the use of automated collection techniques or other forms of information technology. The information collection will be used to enable the BIA to better administer the Indian Reservation Roads Program. In all instances, the Department has strived to lessen the burden on the constituent public and ask for only that information that is absolutely essential to the appropriate administration of the programs affected and in keeping with the Department's fiduciary responsibility to federally-recognized tribes.

A synopsis of the information collection burdens for regulatory revision are provided below. The explanatory summary of each information collection section identified will indicate what measurable standard has been used as a baseline for further calculations of burden hours and operations and maintenance costs to the government. Burden is defined as the total time, effort, or financial resources expended by persons to generate, maintain, retain, or disclose or provide information to or for a Federal agency.

ESTIMATED BURDEN HOURS

CFR section	Number of respondents	Responses per respondent	Burden per response (hours)	Total annual burden (hours)
170.252 Provide application	557	1	4	2,228
170.285 Provide request	557	1	2	1,114
170.296 Record review	557	1	1	557
170.302 Form requirement	557	1	4	2,228
170.413 Reporting requirement	557	1	2	1,114
170.418 Reporting requirement	557	1	1	557
170.428 Form requirement	557	1	40	22,280
170.441 Posting requirement	557	1	½	278
170.442(b) Recordkeeping req.	557	1	1	557
170.467 Provide info. for exception	557	1	1	557

[**Note:** For purposes of this part only, we have used the number 557 as the number of federally-recognized respondent tribes that could possibly file for benefits under the Indian Reservation Roads program. The cost of reporting and recordkeeping by the public is estimated to be approximately $10/. We have used this figure as a medium figure that would indicate the cost of a tribal official or his/her representative in typing a form, submitting information for BIA review, compiling reports from information gathered from outside sources, and other miscellaneous costs that may be associated with obtaining the information needed to fulfill this part's information collection requirements. Only federally-recognized tribes and their employees would be involved in this information collection activity.]

Summary

170.252 What Must an Application for an IRRHPP Include?

This section describes what information must be included in an IRRHPP application. While much of this information resides within the Bureau of Indian Affairs, some tribal effort will be expended in formulating its grant justification in addressing ranking criteria. We estimate that it would take tribal officials 4 hours to compile this information for BIA review, including the time required to have the action documented by an authorized tribal official through letter, resolution or similar facility.

Burden hours = 4 × 557 = 2,228 hours at a cost of $22,280 to the public.

170.285 May a Tribe Challenge the Cost-to-Construct, Vehicle Miles Traveled, and Population Data BIA Uses in the Relative Need Distribution Factor?

This section allows the tribe to request that the Regional Director revise the data that the BIA uses in the Relative Need Distribution Factor. This entails tribal submission of a request which includes relevant data that would allow the Regional Director to revise such data. Supporting data included in this request could take up to 2 hours to compile and format into a formal request.

Burden hours = 557 × 2 = 1,114 hours at a cost of $11,140 to the public.

170.296 How Is the IRR Inventory Kept Accurate and Correct?

This section details the effort expended to update the IRR Inventory data on an annual basis. While this is largely a BIA function, the tribes may review this data and submit a request to provide for errors or omissions to the IRR Inventory. We estimate that this tribal review and submission would take approximately 1 hour.

Burden hours = 557 × 1 = 557 hours and a cost of $5,570 to the public.

170.302 What Are the Minimum Requirements for a Tribe's LRTPs?

This section illustrates the items needed to support a transportation plan. While no form exists, the requirements for supporting the transportation plan are ennumerated. The compilation of

this information involves tribal review of its existing records, inventory data, strategies for meeting its transportation need, coordination efforts with other agencies as appropriate, and official endorsement from the designated tribal official. We estimate that this review and compilation of documents to complete a LRTP would take approximately 4 hours.

Burden hours = 557 × 4 = 2,228 hours at a cost of $22,280 to the public.

170.413 What Is the Tribal Transportation Improvement Program (TTIP)?

This section requires the tribe to submit a Tribal Transportation Improvement Program to the BIA by tribal resolution or tribally authorized government action for inclusion into the IRR TIP. The tribal official tasked with submitting this report must ensure that the TTIP is consistent with the tribal long-range transportation plan and must contain all Indian Reservation Roads funded projects. We estimate that it would take the responsible tribal official approximately 2 hours to complete this task, including the time needed to submit the TTIP to the Bureau of Indian Affairs.

Burden hours = 557 × 2 = 1,114 hours at a cost of $11,140 to the public.

170.418 What Is the Tribal Priority List?

This section describes the tribal priority list as a list of transportation projects which the tribe or tribal organization wants funded. The list is not financially constrained. The tribal government submits this listing to the BIA by official tribal action which we estimate would take 1 hour, including the time needed to identify tribal projects for inclusion.

Burden hours = 557 × 1 = 557 hours at a cost of $5,570 to the public.

170.428 What May a Long-Range Transportation Plan Include?

This section illustrates what items may be included in a tribal long-range transportation plan. While there is no official form for this submission, the section describes how various documents may be included. This task includes compiling information on transportation modes and routes, trip generation studies, social and economic planning documents, measures that address health and safety, review of existing transportation systems, cultural preservation planning documents, scenic byways and tourism plans, measures that address energy conservation considerations, a prioritized list of short-term transportation needs, and an analysis of funding alternatives to implement plan recommendations. This is the most comprehensive of the information collection requirements in this part and we estimate that the tribe would spend an average of 40 hours (or 5 working days) to complete this task.

Burden hours = 557 × 40 = 22,280 hours and a cost of $222,800 to the public.

170.441 How Must BIA or a Tribe Inform the Public When a Hearing Is Held?

This section describes the minimum standards for posting a public notice for hearings concerning the IRR. Since the tribes are already familiar with posting requirements for any number of meetings and public consultations, we estimate that the burden would not exceed ½ hour for each posting.

Burden hours = 557 × ½ = 278 hours at a cost of $2,780 to the public.

170.442 How Is a Public Hearing Conducted?

Paragraph (b) of this section requires a Record of hearing. The presiding official is responsible for compiling the official record of the hearing. A record of a hearing is a summary of oral testimony and all written statements submitted at the hearing. Additional written comments will be added to the record as appropriate. As the tribes are already familiar with record of hearing requirements for other public meetings and consultations, we estimate that the burden would not exceed 1 hour for each hearing.

Burden hours = 557 × 1 = 557 hours at a cost of $5,570 to the public.

170.467 When Can a Tribe Request an Exception From the Design Standards?

This section describes what the engineer of record must submit to request an exception from the design standards in Appendix B of this subpart. The documentation required would include appropriate supporting data, sketches, details, and a justification based on engineering analysis. We estimate that an experienced engineer could compile the necessary documents and make a justification for an exemption within 1 hour.

Burden hours = 557 × 1 = 557 hours at a cost of $5,570 to the public.

I. National Environmental Policy Act

The Department has determined that this rule does not constitute a major Federal action significantly affecting the quality of the human environment and that no detailed statement is required under the National Environmental Policy Act of 1969 (42 U.S.C. 4321). Specific projects under the IRR Program will require NEPA review through an Environmental Assessment or Environmental Impact Statement.

J. Consultation and Coordination With Indian Tribal Governments (Executive Order 13175)

Pursuant to Executive Order 13175 of November 6, 2000, ''Consultation and Coordination with Indian Tribal Governments,'' we have consulted with tribal representatives throughout the negotiated rulemaking process of developing this rule. We conducted consultation at the Negotiated Rulemaking Committee's 23 meetings, accepted oral and written comments at all Committee meetings, maintained Committee information on the IRR web site, provided periodic newsletter and other mailings, provided updates at other transportation related meetings, and sent periodic letters to tribal leaders. We have evaluated any potential effects on federally recognized Indian tribes and have determined that there are no potential adverse effects. The proposed rule expands tribal participation in and responsibilities for various transportation-related activities of the IRR program. We are continuing to consult with tribal governments and tribal organizations as part of the negotiated rulemaking process throughout the comment period after publication of this proposed rule.

K. Clarity of This Rule

Executive Order 12866 requires each agency to write regulations that are easy to understand. In addition to the comments requested above, we invite your comments on how to make this proposed rule easier to understand, including answers to questions such as the following:

(1) Are the requirements in the rule clearly stated?

(2) Does the rule contain technical language or jargon that interferes with its clarity?

(3) Does the format of the rule (grouping and order of sections, use of headings, paragraphing, etc.) aid or reduce its clarity?

(4) Is the description of the rule in the **SUPPLEMENTARY INFORMATION** section of the preamble helpful in understanding the rule?

(5) What else could we do to make the rule easier to understand?

Send a copy of any comments that concern how we could make this rule easier to understand to: Office of Regulatory Affairs, Department of the Interior, Room 7229, 1849 'C' Street, NW., Washington, DC 20240. You may

also e-mail comments concerning the Department's handling of Executive Order 12866 in this rulemaking to this address: *Exsec@ios.doi.gov.*

Rulemaking Analysis and Notices

All comments received before the close of business on the comment closing date indicated above will be considered and will be available for examination in the docket at the above address. Comments received after the comment closing date will be filed in docket and will be considered to the extent practicable. In addition to the late comments, we will also continue to file relevant information in the docket as it becomes available after the comment closing date. Interested persons should continue to examine the docket for new material.

List of Subjects in 25 CFR Part 170

Highways and roads, Indians-lands.

Dated: July 18, 2002.

Neal A. McCaleb,

Assistant Secretary—Indian Affairs.

For the reasons stated in the preamble, the Department of the Interior, Bureau of Indian Affairs, proposes to revise 25 CFR part 170 as follows:

PART 170—INDIAN RESERVATION ROADS PROGRAM

Subpart A—General Provisions and Definitions

Sec.
170.1 What is the authority for this part?
170.2 What is the purpose and scope of this part?
170.3 What is the Federal Government's Indian Reservation Roads policy?
170.4 Do other requirements apply to the IRR Program?
170.5 What is the effect of these regulations on existing tribal rights?
170.6 What are definitions used in this part?

Subpart B—Indian Reservation Roads Program Policy and Eligibility

Consultation, Collaboration, Coordination

170.100 What does ''consultation, collaboration, and coordination'' mean?
170.101 What is the IRR Program consultation and coordination policy?
170.102 How do the Departments consult, collaborate, and coordinate with tribal governments?
170.103 What goals and principles guide the Secretaries?
170.104 Does the Secretary of the Interior consult with tribal governments during the formulation of the annual BIA budget process?
170.105 Must the Secretary consult with tribal governments before spending IRR funds?
170.106 What funds are available for consultation, collaboration, and coordination activities?
170.107 When must State governments consult with tribes and tribal organizations?
170.108 Should planning organizations and local governments consult with tribal governments when conducting planning for transportation projects?
170.109 How do the Secretaries prevent discrimination or adverse impact?
170.110 How can State and local governments prevent discrimination or adverse impact?
170.111 What can a tribe do if discrimination or adverse impacts occur?
170.112 How can tribes and State and government agencies enhance consultation, collaboration, and coordination?

Eligibility for IRR Funding

170.114 What activities may be funded with IRR funds?
170.115 What activities are not eligible for IRR Program funding?
170.116 How can a tribe determine whether a new proposed use of IRR funds is allowable?

Use of IRR and Cultural Access Roads

170.120 What restrictions apply to the use of an Indian Reservation Road (IRR's)?
170.121 What is a cultural access road?
170.122 Who may designate a road as a cultural access road?
170.123 May cultural access roads be included in the IRR Inventory?
170.124 What is the significance of designating a road as a cultural access road?
170.125 Can a tribe close a cultural access road?
170.126 Can a tribe designate a non-tribal road a cultural access road?

Seasonal Transportation Routes

170.130 What are seasonal transportation routes?
170.135 Can IRR Program funds be used to build seasonal transportation routes?
170.136 Can seasonal transportation routes be included in the IRR system inventory?
170.137 Are there standards for seasonal transportation routes?
170.138 Does construction of a seasonal transportation route require rights-of-way or use permits?

IRR Housing Access Roads and Toll Roads

170.140 What is the definition of an IRR housing access road?
170.141 What is the definition of an IRR housing street?
170.142 Are IRR housing access roads and housing streets eligible for IRR Program funding?
170.143 How are IRR housing access roads and housing street projects funded?
170.144 Can tribes use Federal-aid highway funds, including IRR funds, for toll and ferry facilities?
170.145 How does a tribe initiate construction of a toll highway, bridge or tunnel?
170.146 What is the Federal share of a toll highway, bridge or tunnel project?
170.147 How does a tribe initiate construction of ferry boats and ferry terminal facilities?
170.148 How can tribes find out more information about designing and operating a toll highway, bridge or tunnel?

Recreation, Tourism, Trails

170.150 Are Federal funds available for a tribe's recreation, tourism, and trails programs?
170.151 How can tribes access non-IRR Federal funds for their recreation, tourism, and trails programs?
170.152 Can IRR Program funds be used for recreation, tourism, and trails programs?
170.153 What types of activities may tribes perform under a recreation, tourism, and trails program?
170.154 Can roads be built in roadless and wild areas?

Highway Safety Functions

170.155 What Federal funds are available for a tribe's highway safety activities?
170.156 How can tribes obtain funds to perform highway safety projects?
170.157 How can IRR funds be used for highway safety and impaired driver initiatives?
170.158 What types of activities are eligible as highway safety projects?
170.159 Are other funds available for a tribe's highway safety efforts?

Non-Road Transportation

170.160 Can IRR Program funds be used for construction of runways, airports, and heliports?
170.161 Can IRR Program funds be used for construction of airport and heliport access roads?
170.162 Are funds available to construct airports, heliports, and runways?

Transit Facilities

170.163 What is transit?
170.164 What is a tribal transit program?
170.165 Are IRR Program funds available for tribal transit programs?
170.166 How do tribes identify transit needs?
170.167 What Federal funds are available for a tribe's transit program?
170.168 May tribes or tribal organizations use IRR funds as matching funds for other transit grants or programs?
170.169 What transit facilities and related activities that support tribal transit programs are eligible for IRR funding?
170.170 May BIA use IRR funds as matching funds for other transit grants or programs?

IRR Program Coordinating Committee

170.171 What is the IRR Program Coordinating Committee?

170.172 Who are members of the IRR Program Coordinating Committee?
170.173 What are the responsibilities of the IRR Program Coordinating Committee?
170.174 How often will the IRR Program Coordinating Committee meet?
170.175 How does the IRR Program Coordinating Committee conduct business at its meetings?
170.176 How will the IRR Program Coordinating Committee be funded?
170.177 How must the Committee keep the Secretary and the tribes informed of the Committee's accomplishments?

Indian Local Technical Assistance Program (LTAP)

170.178 What is the Indian Local Technical Assistance Program?
170.179 How does the Indian LTAP work?
170.180 How is the Indian LTAP funded?
170.181 How do tribes receive information about opportunities under the Indian LTAP?
170.182 How are Indian LTAP grant, cooperative agreement, and contracting recipients selected?
170.183 Can tribes or tribal organizations enter into a contract or agreement for Indian LTAP funds under the ISDEAA?
170.184 What services do Indian LTAP centers provide?
170.185 How does a tribe obtain services from an Indian LTAP center?
170.186 Do Indian LTAP centers offer similar services provided by State LTAPs?
170.187 What can tribes do if LTAP services are unsatisfactory?
170.188 How are Indian LTAP centers managed?
170.189 What does the Indian LTAP center advisory committee do?
170.190 How are tribal advisory committee members selected?
170.191 How are tribal representatives nominated and selected?
170.192 Who reviews the performance of Indian LTAP centers?

LTAP-Sponsored Education and Training Opportunities

170.193 What LTAP-sponsored transportation training and educational opportunities exist?
170.194 Where can tribes get scholarships and tuition for LTAP-sponsored education and training?

Appendix A to Subpart B—Allowable Uses of IRR Program Funds

Appendix B to Subpart B—Sources of Tribal Transportation Training and Education Opportunities

Subpart C—Indian Reservation Roads Program Funding

170.225 How are IRR Program funds allocated?
170.226 What is the process to allocate IRR Program funds?
170.232 How does BIADOT allocate and distribute 2% Transportation Planning funds?

Tribal Transportation Allocation Methodology for IRR Construction

170.235 How does BIA allocate IRR construction program funds to the tribes?
170.236 Does the Relative Need Distribution Factor allocate funding among the individual tribes, or only to the Regions?

IRR High Priority Project (IRRHPP) Program

170.245 What is the IRR High Priority Project (IRRHPP) Program?
170.246 How is an emergency/disaster defined?
170.247 What funding levels are available to the IRRHPP Program?
170.248 How will BIA and FHWA rank and fund IRRHPP project applications?
170.249 Is there a limit on the amount of IRRHPP funding available for a project?
170.250 May an IRRHPP project be phased over several years?
170.251 How do tribes apply for IRRHPP?
170.252 What must an application for an IRRHPP include?
170.253 Are there any transportation activities for which IRRHPP funds cannot be used?
170.254 Who ranks the IRRHPP projects?
170.255 What is the IRRHPP Award list?
170.256 What is the timeline for the IRRHPP, other than emergency/disaster projects, for any given fiscal year?
170.257 How does the award of an emergency/disaster project application affect projects on the IRRHPP Award List?

Population Adjustment Factor (PAF)

170.263 What is the PAF?
170.264 What is the distribution factor?
170.265 What funding levels are available for distribution based on the PAF?
170.266 What is the Minimum Base Allocation (MBA)?
170.267 What population data is used to determine the PAF?

Relative Need Distribution Factor

170.270 What is the Relative Need Distribution Factor?
170.271 What is the Cost-to-Construct component in the Relative Need Distribution Factor?
170.272 What is the Cost-to-Construct for an individual tribe?
170.273 What is the BIA methodology of estimating construction costs for transportation facilities?
170.274 How may BIA and FHWA revise the method for calculating the Cost-to-Construct component of the Relative Need Distribution Factor?
170.275 What is the source of the construction cost used to generate the CTC?
170.276 Do all IRR facilities identified in the IRR Inventory count in the Relative Need Distribution Factor at 100% of their CTC and VMT?
170.278 What is the VMT component of the Relative Need Distribution Factor and how is it calculated?
170.279 What IRR route segments are used to calculate VMT?
170.282 What is the Population component of the Relative Need Distribution Factor and how is it determined?

General Data Appeals

170.285 May a tribe challenge the Cost-to-Construct, Vehicle Miles Traveled, and Population data BIA uses in the Relative Need Distribution Factor?
170.286 When may a tribe submit a Relative Need Distribution Factor data correction request?
170.287 When must a data correction request be approved?
170.288 How does a tribe appeal a disapproval from the Regional Director?

IRR Inventory and Long-Range Transportation Planning (LRTP)

170.290 How is the IRR Inventory used in the Relative Need Distribution Factor?
170.291 How is the IRR inventory developed?
170.292 Are all facilities included in the IRR Inventory used to calculate CTC?
170.294 Is there a difference for funding purposes between the old BIA Roads Inventory and the IRR Inventory?
170.295 Who is responsible for maintaining the National IRR Inventory Database?
170.296 How is the IRR Inventory kept accurate and current?
170.297 Is transportation planning included in the IRR Inventory and IRR Transportation Improvement Program (TIP)?
170.298 Why exclude transportation planning from the TIP and the IRR Inventory?
170.299 What are the responsibilities of the IRR Program Coordinating Committee for funding issues?

Long-Range Transportation Planning

170.300 How does the LRTP process relate to the Relative Need Distribution Factor?
170.301 Are there cost constraints in the transportation needs identified in the LRTP?
170.302 What are the minimum requirements for a tribe's LRTPs?
170.303 Are all transportation projects identified on the tribe's LRTP used to calculate the tribe's allocation of the national allocation?

Flexible Financing

170.350 May tribes use flexible financing to finance IRR transportation projects?
170.351 How may tribes finance IRR transportation projects that secure payment with IRR funds?
170.352 Can the Secretary of Transportation execute a federal credit instrument to finance IRR projects?
170.353 Can a tribe use IRR funds as collateral?
170.354 Can a tribe use IRR funds to leverage other funds?
170.355 Can BIA regional offices borrow IRR funds from each other to assist in the financing and completion of an eligible IRR project?

170.356 Can a tribe use IRR funds to pay back loans?
170.357 Can a tribe apply for loans or credit from a state infrastructure bank?

Appendix A to Subpart C—IRR High Priority Project Scoring Matrix

Appendix B to Subpart C—Population Adjustment Factor

Appendix C to Subpart C—Cost-to-Construct

Subpart D—Planning, Design, and Construction of Indian Reservation Roads Program Facilities

Transportation Planning

170.400 What is the purpose of transportation planning?
170.401 What transportation planning functions and activities must BIA perform for the IRR Program?
170.402 What transportation planning functions and activities must tribes perform under a self-determination contract or self-governance agreement?
170.403 Who performs transportation planning for the IRR Program?
170.404 What IRR funds can be used for transportation planning?
170.405 How must tribes use planning funds?
170.406 Can IRR construction funds be used for transportation planning activities?
170.407 Can IRR 2 percent planning funds be used for road construction and other projects?
170.408 What happens to 2 percent planning funds unobligated after August 15?
170.409 What is pre-project planning?
170.410 How is the IRR Program transportation planning funded?
170.411 What is the State Transportation Improvement Program (STIP)?
170.412 What is the Indian Reservation Roads Transportation Improvement Program (IRR TIP)?
170.413 What is the Tribal Transportation Improvement Program (TTIP)?
170.414 Must the eligible projects on the tribal TIP be included in the IRR TIP?
170.415 What happens to the tribal TIP after eligible projects are included in the IRR TIP?
170.416 What are the responsibilities of the BIA prior to the IRR TIP being included in the STIP?
170.417 How are projects placed on the TTIP and IRR TIP?
170.418 What is the tribal priority list?
170.419 What is the IRR TIP annual update?
170.420 How is the IRR TIP updated?
170.421 Should the IRR TIP be coordinated within the STIP time frames?
170.422 When may the Secretary amend the IRR TIP?
170.423 How is the IRR TIP amended?
170.424 Is public involvement required in the development of the IRR TIP?
170.425 How does public involvement occur in the development of the IRR TIP?
170.426 What happens after the IRR TIP is approved?
170.427 What is a long-range transportation plan?
170.428 What may a long-range transportation plan include?
170.429 What is the purpose of long-range transportation planning?
170.430 How does BIA or a tribe involve the public in developing the IRR long-range transportation plan?
170.431 How is the IRR long-range plan developed and approved?
170.432 How is the tribal long-range transportation plan used and updated?
170.433 When does BIA update the IRR TIP?
170.434 When may the Secretary amend the IRR TIP?
170.435 How does BIA or a tribe solicit public participation during the development of the IRR TIP?
170.436 What happens after the IRR TIP is approved?

Public Hearings

170.437 What are the purposes and objectives of public hearings for the IRR TIP, long range transportation plan, and IRR projects?
170.438 When is a public hearing for IRR TIP, long-range transportation plan or project held?
170.439 How are public hearings for IRR planning and projects funded?
170.440 How does BIA or the tribe determine the need for a public hearing?
170.441 How is the public informed when no public hearing is scheduled?
170.442 How must BIA or a tribe inform the public when a hearing is held?
170.443 How is a public hearing conducted?
170.444 How are the results of a public hearing obtained?
170.445 Can a decision be appealed?

IRR Inventory

170.446 What is the IRR inventory?
170.447 How is the IRR inventory used?
170.448 How is the IRR inventory database amended?
170.449 How are transportation facilities added to or deleted from the IRR inventory?
170.450 What facilities can be included in the IRR inventory?
170.451 How accurate must the IRR road inventory database be?
170.452 What are the standards for IRR atlas maps?
170.453 What is a strip map?
170.454 How are strip maps used?
170.455 What standards must IRR inventory strip maps meet?
170.456 What is functional classification?
170.457 What are the functional classifications of the IRR Program?
170.458 How are functional classifications used in the IRR Program?
170.459 How is the surface type determined for an IRR road project?
170.460 What is a proposed IRR transportation facility?

Environment and Archeology

170.461 What are the archeological and environmental requirements for the IRR Program?
170.462 Can IRR funds be used for required archeological and environmental compliance work?

Design

170.464 What design standards are used in the IRR Program?
170.465 May BIA use FHWA-approved State or tribal design standards?
170.466 How are these standards used in the design of IRR projects?
170.467 When can a tribe request an exception from the design standards?
170.468 If BIA or FHWA denies a design exception, can that decision be appealed?
170.469 How long does BIA or FHWA have to approve or decline a design exception request by a tribe?

Construction and Construction Monitoring and Rights-of-Way

170.472 What road and bridge construction standards are used in the IRR Program?
170.473 What standards must be used for intermodal projects?
170.474 May BIA use FHWA-approved State or tribal road and bridge construction standards?
170.475 How will BIA monitor the IRR project during construction?
170.476 Is tribal consultation required in order to change a construction project?
170.477 Who conducts inspections of IRR construction projects under a self-determination contract or self-governance agreement?
170.478 What is quality control and who performs it?
170.479 What IRR construction records must tribes and BIA keep?
170.480 Can a tribe review and approve plans, specification and estimate (PS&E) packages for IRR projects?
170.481 Who must approve all PS&E packages?
170.482 How can the plans, specifications, and estimates of an IRR project be changed during construction?
170.483 What is the final inspection procedure for an IRR construction project?
170.484 How is construction project closeout conducted?
170.485 Who has final acceptance of the IRR project audit?
170.486 When does a project closeout occur?
170.487 Who must conduct the project closeout and develop the report?
170.488 What information must be made available for the project closeout?
170.489 Who is provided a copy of the IRR construction project closeout report?
170.490 Will projects negotiated under Public Law 93–638 specify who will be provided a copy of the closeout report?
170.491 Who prepares the IRR construction project closeout report?
170.500 What provisions apply to acquiring IRR Program rights-of-way over trust or restricted lands?

170.501 What must a right-of-way easement document contain at a minimum?
170.502 How are rights-of-way granted on Indian trust or restricted fee lands?

Program Reviews and Management Systems

170.510 What are BIA IRR Program reviews?
170.511 What is an IRR process review of a BIA regional office?
170.512 What happens with the information gathered from the IRR process review?
170.513 What happens when the review process identifies areas for improvement?
170.514 Are management systems required for the IRR Program?
170.515 How are IRR Program management systems funded?
170.516 How will the IRR management systems be implemented?

Appendix A to Subpart D—Archeological and Environmental Requirements for the IRR Program

Appendix B to Subpart D—Design Standards for the IRR Program

Subpart E—Service Delivery for Indian Reservation Roads

170.600 What IRR Program functions may be assumed by a tribe in a self-determination contract or self-governance agreement?
170.601 What IRR project and program functions are not otherwise contractible?
170.602 How are the IRR non-contractible program and project functions funded?
170.603 May tribes include the cost for contractible supportive administrative functions in their budgets?
170.604 How does BIA determine the amount of funds needed for non-contractible non-project related functions?
170.605 Are the unused IRR Program management funds reserved by the Secretary considered residual funds?
170.606 What happens to the unused portion of IRR Program management funds reserved by the Secretary?
170.608 May IRR Programs be contracted under the ISDEAA?
170.609 What are consortium contracts/agreements?
170.610 What must BIA include in the notice of availability of funds?
170.611 Can the Secretary transfer funds to tribal governments before issuing a notice of funding availability?
170.612 Can a tribe enter into a self-determination contract or self-governance agreement that exceeds one year?
170.613 May a tribe receive advance payments of IRR funds for non-construction activities?
170.614 May the Secretary advance payments of IRR funds to a tribe under a self-determination contract for construction activities?
170.615 What is a design/construct IRR self-determination contract?
170.616 May the Secretary advance payments of IRR funds to a tribe under a self-determination design/construct contract for construction activities?
170.617 May the Secretary advance payments of IRR funds to a tribe or consortia under a self-governance agreement?
170.618 How are advance payments made when additional IRR funds are made available after execution of the self-governance agreement?
170.619 May a self-determination or self-governance tribe include a contingency in its proposal budget?
170.620 Can Indian tribes and tribal organizations performing under self-determination contracts of self-governance agreements keep savings that result from their administration of IRR projects or an entire tribal IRR Program?
170.621 How do the ISDEAA's Indian preference provisions apply?
170.622 Do tribal preference and Indian preference apply to IRR funding?
170.623 What protections does the government have if a tribe fails to perform?
170.624 What activities may the Secretary review and monitor?
170.625 If a tribe incurs unforeseen construction costs, can it get additional funds?
170.626 When may BIA use force account methods in the IRR Program?
170.627 What regulations apply to BIA force account project activities?
170.628 How do legislation and procurement requirements affect the IRR program?
170.630 What regulations apply to waivers?
170.631 How does a tribe request a waiver of a Department of Transportation regulation?
170.632 Is technical assistance available for self-determination contracts and self-governance agreements under the ISDEAA?
170.633 What IRR programs, functions, services, and activities are subject to the construction regulations set forth in subpart K of 25 CFR part 1000?
170.634 How are IRR program projects and activities included in the self-governance agreement?
170.635 Are contract support funds provided in addition to the 2 percent (2%) IRR transportation planning funds?
170.636 May contract support costs for IRR construction projects be paid out of Department of the Interior or BIA appropriations?

Subpart F—Program Oversight and Accountability

170.700 What is the IRR Program stewardship plan?
170.701 What is an IRR Program stewardship agreement?
170.702 What is a BIA regional IRR Program stewardship agreement?
170.703 Can a self-determination contract or self-governance agreement serve as an IRR program stewardship agreement?
170.704 What must be included in a BIA regional or tribal IRR Program stewardship agreement?
170.705 What is the process for obtaining the facility owner's review of the PS&E?
170.706 Can a direct service tribe and BIA region sign a Memorandum of Understanding?
170.707 Are there licensing requirements to ensure standards are met under the IRR Program?
170.708 Must an IRR PS&E be approved before proceeding to construction?

Subpart G—BIA Road Maintenance

170.800 What Is IRR Transportation Facility Maintenance?
170.801 Who owns IRR Transportation Facilities?
170.802 How is BIA Road Maintenance Program related to the IRR Program?
170.803 How is road maintenance funded?
170.804 What is the BIA Road Maintenance Program?
170.805 What facilities are eligible for maintenance and operation under the BIA Road Maintenance Program?
170.806 Is maintenance required on facilities built with federal funds?
170.807 Do BIA or the tribes have to perform all of the IRR facility maintenance?
170.808 What activities are eligible for funding under the BIA Road Maintenance Program?
170.809 What is an IRR TFMMS?
170.810 What must an effective IRR TFMMS include at a minimum?
170.811 Can Maintenance Program funds be used to upgrade IRR facilities?
170.812 Can tribes enter into a self-determination contract or self-governance agreement for the BIA Road Maintenance Program?
170.813 To what standards must an IRR transportation facility be maintained?
170.814 Can BIA Road Maintenance funds be used for heliport facilities?
170.815 What happens if a facility is not being maintained due to lack of funds?
170.816 Must IRR bridge inspections be coordinated with tribal and local authorities?
170.817 What are the minimum qualifications for certified bridge inspectors?
170.818 Must bridge inspection reports be reviewed?
170.819 How often are IRR bridge inspections performed?
170.820 What standards are used for bridge inspections?
170.821 What is emergency maintenance?
170.822 What is a Declared State of Emergency?
170.823 When can access to IRR transportation facilities be restricted?

Appendix A to Subpart G—List of Activities Eligible for Funding Under The BIA Transportation Facility Maintenance Program

Subpart H—Miscellaneous

Hazardous and Nuclear Waste Transportation

170.900 What is the purpose of the provisions relating to transportation of hazardous and nuclear waste.
170.901 What standards govern transportation of radioactive and hazardous materials?
170.902 What transport activities do State, tribal, and local governments perform?
170.903 How is a tribe notified of the transport of radioactive waste?
170.904 Who responds to an accident involving a radioactive or hazardous materials shipment?
170.905 Can tribes use IRR Program funds for training in handling radioactive and hazardous material?
170.906 Can tribes obtain training in transporting hazardous material?
170.907 How are radioactive and hazardous material spills addressed?

Reporting Requirements and Indian Preference

170.910 What information on the IRR Program or projects must BIA provide to tribes?
170.915 Are Indians entitled to employment and training preferences?
170.916 Are Indian organizations and Indian-owned businesses entitled to a contracting preference?
170.918 Is Indian preference permitted for federally funded non-IRR transportation projects?
170.919 May tribal-specific employment rights and contract preference laws apply to IRR projects?
170.920 What is the difference between tribal preference and Indian preference?
170.921 May the cost of tribal employment taxes or fees be included in the budget for an IRR project?
170.922 May tribes impose taxes or fees on those performing IRR Program services?
170.923 Can tribes receive direct payment of tribal employment taxes or fees?

Emergency Relief

170.924 What is the purpose of the provisions relating to emergency relief?
170.925 What emergency or disaster assistance programs are available?
170.926 How can States get Emergency Relief Program funds to repair IRR System damage?
170.927 What qualifies for ERFO funding?
170.928 What does not qualify for ERFO funding?
170.929 What happens if an ERFO claim is denied?
170.930 Is ERFO funding supplemental to IRR Program funding?
170.931 Can a tribe administer ERFO repairs under a self-determination contract or a self-governance agreement?
170.932 How can FEMA Program funds be accessed to repair damage to the IRR System?

Tribal Transportation Departments

170.936 Can a tribe establish a Tribal Transportation Department?
170.937 How can tribes find out information about staffing and organization of tribal transportation departments?
170.938 Are there any other funding sources available to operate tribal transportation departments?
170.939 Can tribes use IRR Program funds to pay for costs to operate a tribal transportation department?
170.940 Can tribes regulate oversize or overweight vehicles?

Arbitration Provisions

170.941 Are alternative dispute resolution procedures available to self-determination and self-governance tribes and the Secretary to resolve disputes between them in performing IRR Public Law 93–638 activities?
170.942 Are alternative dispute resolution procedures available to resolve IRR program disputes?
170.943 How does a direct service tribe begin the alternative dispute resolution process?

Other Miscellaneous Provisions

170.950 How can a tribe or tribal organization find out if the ISDEAA has superseded an IRR provision?
170.951 Can tribes become involved in transportation research?
170.952 Are federal funds available for coordinated transportation services for a tribe's Welfare-to-Work, Temporary Assistance to Needy Families, and other quality of life improvement programs?

Authority: Pub. L. 105–178, 112 Stat. 107; 5 U.S.C. 565; 23 U.S.C. 101(a), 208, 308; 25 U.S.C. 47.

Subpart A—General Provisions and Definitions

§ 170.1 What is the authority for this part?

This part is prepared and issued by the Secretary of the Interior with the active participation and agreement of the designated representatives of the Secretary of Transportation and with the active participation and representation of Indian tribes, tribal organizations, and individual tribal members under the Transportation Equity Act for the 21st Century (TEA–21), Section 1115(b), Title 23 Chapter 2, and the negotiated rulemaking procedures in 5 U.S.C. 565.

§ 170.2 What is the purpose and scope of this part?

(a) The purpose of this part is to provide uniform and consistent rules as well as a funding formula for the Department of Interior (DOI) in implementing the Indian Reservation Roads Program.

(b) Included in this part are other Title 23 programs administered by the Secretary and implemented by tribes and tribal organizations under the Indian Self-Determination and Education Assistance Act (ISDEAA).

§ 170.3 What is the Federal Government's Indian Reservation Roads policy?

(a) It is the policy of the Secretary of Interior and Secretary of Transportation to:

(1) Provide a uniform and consistent set of rules for the Indian Reservation Roads and BIA Road Maintenance programs;

(2) Encourage Indian tribes and tribal organizations to become more knowledgeable about these programs by providing information on the programs and the opportunities Indian tribes have regarding them;

(3) Facilitate the efforts of Indian tribes and tribal organizations to plan, conduct and administer these programs and to remove any obstacles to administering these programs;

(4) Encourage including these programs under self-determination contracts or self-governance agreements;

(5) Make available to Indian tribes and tribal organizations all administrative functions of these programs that are otherwise contractible under self determination contracts or self-governance agreements; and

(6) Implement policies, procedures, and practices at the Departments to ensure the letter, spirit, and goals of TEA–21 are fully and successfully implemented.

(b) This part is designed to facilitate and encourage Indian tribes to participate in the planning, design, construction, maintenance, conduct and administration of these programs. The Secretary shall afford Indian tribes and tribal organizations the flexibility, information and discretion necessary to design these programs under self-determination contracts and self-governance agreements to meet the needs of their communities consistent with these regulations and their diverse needs.

(c) The Secretary of Interior and Secretary of Transportation recognize that contracting, compacting, or continuing to allow federal administration of these programs is an exercise of Indian tribes' self-determination and self-governance.

(1) The tribal contractor is responsible for managing the day-to-day operation of the contracted Federal programs, functions, services, and activities.

(2) The tribe accepts responsibility and accountability to the beneficiaries

under self-determination contracts and self-governance agreements for:

(i) Use of the funds; and

(ii) Satisfactory performance of the program, functions, services, and activities funded under the contract or agreement.

(3) The Secretary will continue to discharge the trust responsibilities to protect and conserve the trust resources of Indian tribes and the trust resources of individual Indians.

(d) The Secretary should interpret Federal laws and regulations in a manner that facilitates including programs covered by this part in the government-to-government agreements authorized under the ISDEAA.

(e) The administrative functions referenced in paragraph (a)(5) of this section are contractible without regard to the organizational level within the Department that carries out these functions.

(1) Including IRR administrative functions under self-determination contracts and self-governance agreements does not limit or reduce in any way the funding for any program, function, service or activity serving any other Indian tribe.

(2) The Secretary is not required to reduce funding for these programs serving a tribe to make funds available to another Indian tribe or tribal organization. This part must be liberally construed for the benefit of Indian tribes and tribal organizations to implement the Federal policy of self-determination and self-governance. Any ambiguities in this part must be construed in favor of the Indian tribes or tribal organization so as to facilitate and enable the transfer of programs, authorized by 23 U.S.C. 202 and Title 25 U.S.C.

§ 170.4 Do other requirements apply to the IRR Program?

Yes, IRR Program policy and guidance manuals and directives must be consistent with the regulations in this part and 25 CFR parts 900 and 1000.

§ 170.5 What is the effect of these regulations on existing tribal rights?

This part does not:

(a) Affect, modify, diminish, or otherwise impair the sovereign immunity from suit enjoyed by Indian tribes;

(b) Terminate, waive, modify, or reduce the trust responsibility of the United States to the Indian tribe(s) or individual Indians;

(c) Require an Indian tribe to assume a program relating to the Indian Reservation Roads program; or

(d) Impede awards by other Departments and agencies of the United States or a State to Indian tribes to administer programs under any other applicable law.

§ 170.6 What are definitions used in this part?

AASHTO means the American Association of State Highways and Transportation Officials.

Act means the Indian Self-Determination and Education Assistance Act of 1975, Public Law 93–638, as amended.

Annual Funding Agreement means a document that represents the negotiated agreement of the Secretary to fund, on an annual basis, the programs, services, activities and functions transferred to an Indian tribe or tribal organization under the Indian Self-Determination and Education Assistance Act, as amended.

Appeal means a request by a tribe, tribal organization or consortium for an administrative review of an adverse Agency decision.

BIA means the Bureau of Indian Affairs of the Department of the Interior.

BIA DOT means the Bureau of Indian Affairs, Division of Transportation.

BIA force account means the performance of work done by BIA employees.

BIA Road Maintenance Program means the program that covers the distribution and use of the funds provided by Congress in the annual Department of Interior appropriations acts for maintaining transportation facilities.

BIA Regional Director means the BIA official in charge of a Regional Office.

CFR means the United States Code of Federal Regulations.

Compact means an executed document which affirms the government-to-government relationship between a self-governance tribe and the United States. The compact differs from an annual funding agreement in that parts of the compact apply to all bureaus of the Department of the Interior rather than to a single bureau.

Construction means the supervising, inspecting, actual building, and incurrence of all costs incidental to the construction or reconstruction of a highway. This includes bond costs and other costs relating to the issuance in accordance with section 122 of bonds or other debt financing instruments and costs incurred by the State in performing Federal-aid project related audits that directly benefits the Federal-aid highway program. The term includes—

(1) Locating, surveying, and mapping (including the establishment of temporary and permanent geodetic markets in accordance with specifications of the National Oceanic and Atmospheric Administration of the Department of Commerce);

(2) Resurfacing, restoration, and rehabilitation;

(3) Acquiring rights-of-way;

(4) Providing relocation assistance, acquisition of replacement housing sites, and acquisition and rehabilitation, relocation and construction of replacement housing;

(5) Eliminating hazards of railway grade crossings;

(6) Eliminating roadside obstacles;

(7) Making improvements that directly facilitate and control traffic flow, such as grade separation of intersections, widening of lanes, channelization of traffic, traffic control systems, and passenger loading and unloading areas; and

(8) Making capital improvements that directly facilitate an effective vehicle weight enforcement program, such as scales (fixed and portable), scale pits, scale installation, and scale houses.

Construction contract means a fixed price or cost-reimbursement self-determination or construction project, except that such term does not include any contract—

(1) That is limited to providing planning services and construction management services (or a combination of such services);

(2) For the Housing Improvement Program or roads maintenance program of the Bureau of Indian Affairs administered by the Secretary of the Interior; or

(3) For the health facility maintenance and improvement program administered by the Secretary of Health and Human Services.

Construction management services (CMS) means activities limited to administrative support services, coordination, and monitoring oversight of the planning, design, and construction process. Typical CMS activities are defined in 25 CFR 900.113.

Construction programs means, when used in a self-determination contract, those programs as defined under 25 CFR 900.113(c); and, when used in a self-governance agreement, those programs as defined under 25 CFR part 240.

Construction project management means direct responsibility for the construction project through day-to-day on-site management and administration of the project. Activities may include cost management, project budgeting, project scheduling, and procurement services.

Consultation means government-to-government communication in a timely manner by all parties about a proposed or contemplated decision in order to:

(1) Secure meaningful tribal input and involvement in the decision-making process; and

(2) Advise the tribe of the final decision and provide an explanation.

Contract means a self-determination contract as defined in section 4(j) of the Act.

Days means calendar days, except where the last day of any time period specified in these regulations falls on a Saturday, Sunday, or a Federal holiday, the period shall carry over to the next business day unless otherwise prohibited by law.

Departments means the Department of the Interior and the Department of Transportation.

Design means services performed by licensed design professionals related to preparing drawings, specifications, and other design submissions specified in the contract or agreement, as well as services provided by or for licensed design professionals during the bidding/negotiating, construction, and operational phases of the project.

DOI means the Department of the Interior.

FHWA means the Federal Highway Administration in the Department of Transportation.

Funding year means either fiscal year or calendar year, as may be appropriate.

Indian means a person who is a member of an Indian tribe or as otherwise defined in 25 U.S.C. 250b.

Indian tribe means any Indian tribe, nation, band, pueblo, rancheria, colony, or community, including any Alaska Native Village or regional or village corporation as defined or established under the Alaska Native Claims Settlement Act which is federally recognized by the U.S. government for special programs and services provided by the Secretary to Indians because of their status as Indians.

IRR means Indian Reservation Roads.

IRR bridge program means the program authorized under 23 U.S.C. 202(d)(4) using IRR Program funds for the improvement of deficient IRR bridges.

IRR inventory means a comprehensive list of information for all transportation facilities eligible for IRR funding by a tribe or reservation, in order by BIA agency and region, Congressional district, State, and county. Other specific information collected and maintained under the IRR Program includes classification, route number, bridge number, current and future traffic volumes, maintenance responsibility, ownership, and other information as required in subpart C.

IRR Program means a part of the Federal Lands Highway Program established in 23 U.S.C. 204 to address transportation needs of Indian tribes.

IRR Program Funds means the funds covered in chapter 2 of Title 23 for the cost of transportation planning, research, engineering, and construction of highways, roads, parkways, or transit facilities within or providing access to Indian lands, communities and Alaska Native villages and includes associated program management costs.

IRR transportation facilities means public roads, bridges, drainage structures, including culverts, ferry routes, marine terminals, transit facilities, boardwalks, pedestrian paths, trails, and their appurtenances, and other transportation facilities such as bus terminals, airports, heliports, road maintenance yards, adjacent parking areas, and public parking. It may also include other transportation facilities as designated by the tribe and the Secretary.

IRR transportation planning funds means the funds made available (up to 2%) for Indian reservation roads for each fiscal year under 23 U.S.C. 204(j) as may be allocated to such tribes for purposes of planning Indian reservation roads funding proposals.

ISDEAA means the Indian Self-Determination and Education Assistance Act of 1975, Public Law 93–638, as amended.

Maintenance means the performance of activities to keep an IRR transportation facility at its as constructed condition and to insure the health, safety, and economical use of the traveling public. Maintenance includes the preservation of IRR transportation facilities including surfaces, shoulders, roadsides, structures, and such traffic control devices as are necessary for safe and efficient utilization of the facility.

NBI means the national inventory of structural and appraisal data collected to fulfill the requirements of the National Bridge Inspection Standards, as defined in 23 CFR 650, subpart C. Each State is required to prepare and maintain an inventory of all bridges within that State that are subject to these NBI standards and to provide the collected data to the Federal Highway Administration as needed. The NBI is maintained and monitored by the FHWA Bridge Division in Washington, DC.

Office of Self-Governance (OSG) means the office within the Office of the Assistant Secretary-Indian Affairs, Department of the Interior, which is responsible for the implementation and development of tribal self-governance programs.

Program means a policy, plan, project, program or activity covered by this part.

Project Planning means those project related activities which precede the design phase of a transportation project. These activities include, but are not limited to, collection of detailed traffic data, accident information, functional, safety or structural deficiencies; corridor studies; conceptual studies, environmental studies; geotechnical studies; archaeological studies; project scoping; public hearings; location analysis; preparation of application for permits and clearances, and meetings with facility owners and transportation officials.

Public road means any road or street under the jurisdiction of and maintained by a public authority and open to public travel. An Indian Reservation Road is a public road. Indian tribal governments and BIA are public authorities.

Real Property means any interest in land together with the improvements, structures, and fixtures and appurtenances.

Regionally significant project means a project that is on a facility which serves regional transportation needs (such as access to and from the area outside of the region, major planned developments such as new retail malls, sports complexes, etc., or transportation terminations as well as most terminals themselves) and would normally be included in the modeling of a metropolitan area's transportation network, including, at a minimum, all principal arterial highways and all fixed guideway transit facilities that offer a significant alternative to regional highway travel.

Rehabilitation means the major work required to restore the structural integrity of a bridge as well as work necessary to correct major safety defects.

Relocation means the adjustment of utility facilities required by the highway project. It includes removing and reinstalling the facility, including necessary temporary facilities, acquiring necessary right-of-way on the new location, moving, rearranging or changing the type of existing facilities and taking any necessary safety and protective measures. It also means constructing a replacement facility that is both functionally equivalent to the existing facility and necessary for continuous operation of the utility service, the project economy, or sequence of highway construction.

Rest area means an area or site established and maintained within or adjacent to the highway right-of-way or under public supervision or control for the convenience of the traveling public.

Secretaries means the Secretary of the Interior and the Secretary of Transportation.

Secretary means the Secretary of the Interior or her/his designee authorized to act on behalf of the Secretary.

State transportation agency means that department, commission, board, or official of any State charged by its laws with the responsibility for highway construction. The term ''State'' would be considered equivalent to ''State transportation agency'' if the context so implies.

TEA–21 means the Transportation Equity Act for the 21st Century, Public Law 105–178, as amended by Title IX of Public Law 105–206.

Transportation Improvement Program (TIP) means a staged, multi-year intermodal program of transportation projects which is consistent with the metropolitan transportation plan.

Transportation planning means developing land use, economic development, traffic demand, public safety, health and social strategies to meet transportation current and future needs.

U.S.C. means the United States Code.

Subpart B—Indian Reservation Roads Program Policy and Eligibility

Consultation, Collaboration, Coordination

§ 170.100 What does ''consultation, collaboration, and coordination'' mean?

For purposes of this part:

(a) Consultation means government-to-government communication in a timely manner by all parties about a proposed or contemplated decision in order to secure meaningful tribal input and involvement in the decision-making process, and to advise the tribe of the final decision and provide an explanation;

(b) Collaboration means that all parties involved in carrying out the planning and/or project development processes actively work together in a timely manner to achieve a common goal or objective; and

(c) Coordination means sharing and comparing by all parties in a timely manner of transportation plans, programs, projects, and schedules of one agency to related plans, programs, projects, and schedules of other agencies and adjustment of plans, programs, projects, and schedules to optimize the efficient and consistent delivery of transportation projects and services.

§ 170.101 What is the IRR Program consultation and coordination policy?

The IRR Program government-to-government consultation and coordination policy is to foster and improve communication, cooperation and coordination among tribal, Federal, state, and local governments and other transportation organizations when:

(a) Identifying high accident locations and locations for improving both vehicle and pedestrian safety;

(b) Developing state, metropolitan, regional, IRR, and tribal transportation improvement programs that impact tribal lands, communities, and members;

(c) Developing short- and long-range transportation plans;

(d) Developing IRR transportation projects;

(e) Developing environmental mitigation measures necessary to protect and/or enhance Indian lands and the environment, and counteract the impacts of the projects;

(f) Developing plans or projects to replace or rehabilitate IRR deficient bridges;

(g) Developing plans or projects for disaster and emergency relief response and the repair of eligible damaged IRR facilities;

(h) Assisting in the development of state and tribal agreements related to the IRR Program;

(i) Developing and improving transit systems serving Indian lands and communities; and

(j) Assisting in the submission of discretionary grant applications for state and Federal funding for IRR facilities.

§ 170.102 How do the Departments consult, collaborate, and coordinate with tribal governments?

The Department of the Interior and the Department of Transportation operate within a government-to-government relationship with federally recognized tribes. As a critical element of this relationship, these agencies should assess the impact of Federal transportation policies, plans, projects, programs on tribal rights and interests to ensure that these rights and concerns are appropriately considered during the development of all programs.

§ 170.103 What goals and principles guide the Secretaries?

When undertaking transportation activities affecting tribes, the Secretaries should, to the maximum extent permitted by law:

(a) Establish regular and meaningful consultation and collaboration with affected tribal governments, including facilitating the direct involvement of tribal governments in short- and long-range Federal transportation planning efforts;

(b) Promote the rights of tribal governments to govern their own internal affairs in tribal transportation matters;

(c) Promote the rights of tribal governments to continue receiving direct transportation services from the Federal Government, or to enter into self-determination and self-governance agreements to directly operate any tribally-related transportation programs serving tribal members;

(d) Ensure the continuation of the trust responsibility of the United States to tribes and Indian individuals;

(e) Take appropriate steps to reduce the imposition of unfunded mandates upon tribal governments to the extent permitted by law;

(f) Encourage flexibility and innovation in the implementation of the IRR Program;

(g) Reduce, streamline, and eliminate unnecessarily restrictive transportation policies, guidelines or procedures; and

(h) Ensure that the IRR Program is implemented consistent with tribal sovereignty and the government-to-government relationship.

§ 170.104 Does the Secretary of the Interior consult with tribal governments during the formulation of the annual BIA budget process?

It is the policy of the Secretary to consult with, and solicit the participation of, tribes and tribal organizations in the development of budget proposals for the IRR Program.

§ 170.105 Must the Secretary consult with tribal governments before spending IRR funds?

Yes, before spending IRR funds for any project, the Secretary must consult with any affected tribe or tribal organization to determine tribal preferences to the greatest extent feasible concerning all aspects of the project.

(a) Within 30 days after the Secretary's allocation of funds for any phase of an IRR project, the Secretary must notify affected tribes or tribal organizations by registered mail with return receipt.

(b) The Secretary's notice must offer technical assistance in preparing a self-determination contract or self-governance agreement proposal.

§ 170.106 What funds are available for consultation, collaboration, and coordination activities?

To fund consultation, collaboration, and coordination of IRR activities, tribes or tribal organizations may use:

(a) IRR funds;
(b) Tribal Priority Allocation (TPA) funds;
(c) Administration for Native Americans (ANA) funds;
(d) Economic Development Administration (EDA) funds;
(e) Community Development Administration (CDA) funds;
(f) Community Development Block Grant (CDBG) funds; Indian Housing Block Grant (IHBG) funds;
(g) Indian Health Service Tribal Management Grant (IHSTMG) funds;
(h) General funds of the tribal government, Federal Highway Administration (FHWA) transportation planning grants; and
(i) Any other funds available for the purpose of consultation, collaboration, and coordination activities.

§ 170.107 When must State governments consult with tribes and tribal organizations?

Each State must develop the State transportation improvement program in consultation with tribal organizations and BIA in those areas under Indian tribal jurisdiction. This includes providing for a fully coordinated transportation planning process which, among other things, coordinates transportation planning efforts carried out by the State with transportation planning efforts carried out by tribes and tribal organizations. The statewide and metropolitan planning organization requirements are in 23 U.S.C. 134 and 135. Regulations can be found at 23 CFR part 450.

§ 170.108 Should planning organizations and local governments consult with tribal governments when conducting planning for transportation projects?

Yes, it is the policy of the Department to foster and improve communication, cooperation, and coordination among Metropolitan Planning Organizations (MPOs), Rural Planning Organizations (RPOs), local governments, and municipal governments on transportation matters of common concern. Accordingly, planning organizations and local governments will consult with tribal governments when planning for transportation projects.

§ 170.109 How do the Secretaries prevent discrimination or adverse impact?

In administering the IRR Program, the Secretaries actively monitor these programs to ensure that nondiscrimination and environmental justice principles are integral parts of their programs, policies, and activities. The Secretaries consult with tribes early in the development of these programs, policies, or activities, to identify potential discrimination and to recommend positive corrective actions to avoid disproportionately high and adverse effects on tribes and Native American populations.

§ 170.110 How can State and local governments prevent discrimination or adverse impact?

(a) Under 23 U.S.C. 134 and 135, and 23 CFR part 450, State and local government officials should consult and work with tribes early in the development of programs to:
(1) Identify potential discrimination; and
(2) Recommend positive corrective actions to avoid disproportionately high and adverse effects on tribes and Native American populations.
(b) Examples of adverse effects include, but are not limited to:
(1) Impeding access to tribal communities or activities;
(2) Creating excessive access to culturally or religiously sensitive areas;
(3) Negatively impacting natural resources, trust resources, tribal businesses, religious, and cultural sites;
(4) Harming indigenous plants and animals; and
(5) Impairing the ability of tribal members to engage in commercial, cultural, and religious activities.

§ 170.111 What can a tribe do if discrimination or adverse impacts occur?

If discrimination or adverse impacts occur, a tribe should take the following steps in the order listed:
(a) Take reasonable steps to resolve the problem directly with the State or local government involved;
(b) Contact BIA, FHWA or Federal Transit Authority (FTA) officials to report the problem and seek assistance in resolving the problem through negotiation or other informal means; and
(c) If efforts under paragraphs (a) and (b) of this section are unsuccessful, request that BIA, FHWA or FTA invoke legal remedies to correct the problem.

§ 170.112 How can tribes and state and government agencies enhance consultation, collaboration, and coordination?

Tribes and state and Federal Government agencies may enter into intergovernmental Memoranda of Agreement (MOA) to streamline and facilitate consultation, collaboration, and coordination.

Eligibility for IRR Funding

§ 170.114 What activities may be funded with IRR funds?

Notwithstanding any prior guidance, IRR funds may be used:
(a) For all of the items listed in Appendix A to this subpart;
(b) For other purposes identified in this part; or
(c) For other purposes identified in guidance issued by the IRR Program Coordinating Committee under the procedures in Appendix A to this subpart, item (35) and § 170.173.
(d) Each of the items listed in the appendix must be interpreted in a manner that permits, rather than prohibits, a proposed use of funds.

§ 170.115 What activities are not eligible for IRR Program funding?

IRR Program funds cannot be used for any of the following:
(a) Cyclical maintenance work, including patching or marking pavement; grading shoulders and ditches; cleaning culverts; snow removal, roadside mowing, normal sign repair and replacement, painting roadway structures, and maintaining, cleaning, and repairing bridge joints, drainage, and other bridge appurtenances;
(b) Structures and erosion protection unrelated to transportation and roadways;
(c) General reservation planning not involving transportation;
(d) Landscaping and irrigation systems not involving transportation programs and projects;
(e) Work performed on projects that are not included on an FHWA-approved IRR Transportation Improvement Program (TIP), unless otherwise authorized by the Secretary of the Interior and the Secretary of Transportation;
(f) Purchase of equipment unless authorized by Federal law; or
(g) Trail development and related activities prohibited by 23 U.S.C. 206(g).

§ 170.116 How can a tribe determine whether a new proposed use of IRR funds is allowable?

(a) A tribe that proposes a new use of IRR program funds must submit a written inquiry to BIA and FHWA concerning whether the proposed use is eligible under Titles 23 and 25 of the United States Code and other applicable provisions of Federal law.
(b) For eligibility questions that refer to self-determination and self-governance contracting and road maintenance, BIA must provide a written response to the requesting tribe within 60 days of receipt of the written inquiry. For eligibility questions that refer to IRR Program, FHWA must provide a written response to the requesting tribe within 60 days of receipt of the written inquiry. BIA must

approve the proposed use if it is authorized under title 25 of the United States Code and is related to transportation. FHWA must approve the proposed use if it listed as an eligible item in title 23 of the United States Code. To the extent practicable and before denying the request, BIA or FHWA consults with the IRR Program Coordinating Committee.

(c) If either BIA or FHWA fails to issue the requesting tribe a timely written response to the eligibility inquiry, the proposed use will be deemed to be allowable until a determination has been made and the written response is provided to the tribe.

(d) BIA and FHWA will send copies of all eligibility determinations to the IRR Program Coordinating Committee and BIA regional offices.

(e) Tribes may appeal denials of a proposed use pursuant to 25 CFR part 2.

Use of IRR and Cultural Access Roads

§ 170.120 What restrictions apply to the use of an Indian Reservation Road (IRR)?

IRR's must generally be open and available for public use. However, the public authority having jurisdiction over these roads may:

(a) Restrict road use or close roads temporarily to public use when required for public safety, fire prevention or suppression, fish or game protection, low load capacity bridges, or prevention of damage to unstable roadbeds;

(b) Conduct engineering and traffic analysis under established traffic engineering practices to determine maximum speed limits, maximum vehicular size, and weight limits, and identify needed traffic control devices; and

(c) Erect, maintain, and enforce compliance with the needed regulatory signs and pavement markings.

§ 170.121 What is a cultural access road?

A cultural access road is a public road that provides access to sites for cultural purposes as defined by individual tribal traditions, which may include, for example:

(a) Sacred and medicinal sites;

(b) Gathering medicines or materials such as grasses for basket weaving; or

(c) Other traditional activities, including, but not limited to, subsistence hunting, fishing and gathering.

§ 170.122 Who may designate a road as a cultural access road?

Indian tribal governments and other local public authorities may designate a road as a cultural access road.

§ 170.123 May cultural access roads be included in the IRR Inventory?

Yes, cultural access roads may be included in the IRR Inventory if they meet the definition of an IRR Road.

§ 170.124 What is the significance of designating a road as a cultural access road?

A cultural access road designation is an entirely voluntary and internal decision made by the tribe to help it and other public authorities manage, protect, and preserve access to locations that have cultural significance.

§ 170.125 Can a tribe close a cultural access road?

Yes, a tribe with jurisdiction over a cultural access road can close it. The tribe can do this:

(a) During periods when the tribe or tribal members are involved in cultural activities; and

(b) In order to protect the health and safety of the tribal members or the general public.

§ 170.126 Can a tribe designate a non-tribal road a cultural access road?

Yes, tribes and a public authority having jurisdiction over a road may enter into agreements that recognize the tribal designation of a cultural access road and cooperate to protect cultural resources.

Seasonal Transportation Routes

§ 170.130 What are seasonal transportation routes?

Seasonal transportation routes are non-recreational transportation routes in the IRR inventory which are used for access to Indian communities or villages and may not be open for year-round use. These include snowmobile trails, ice roads, and overland winter roads.

§ 170.135 Can IRR Program funds be used to build seasonal transportation routes?

Yes, IRR Program funds can be used to build seasonal transportation routes.

§ 170.136 Can seasonal transportation routes be included in the IRR system inventory?

Yes, by official tribal authorization, a tribe may request that seasonal transportation routes be included in an IRR system inventory.

§ 170.137 Are there standards for seasonal transportation routes?

Yes, in addition, a tribe can develop and/or adopt standards, which are equal to, or exceed, state, Federal, or national standards.

§ 170.138 Does construction of a seasonal transportation route require rights-of-way or use permits?

Yes, use of IRR funds requires rights-of-way or use permits.

IRR Housing Access Roads and Toll Roads

§ 170.140 What is the definition of an IRR housing access road?

An IRR housing access road is a public road on the IRR system that provides access to a housing cluster or Indian community.

§ 170.141 What is the definition of an IRR housing street?

An IRR housing street is a public road on the IRR system that provides access to adjacent homes within a housing cluster or Indian community.

§ 170.142 Are IRR housing access roads and housing streets eligible for IRR Program funding?

Yes, IRR housing access roads and housing streets are eligible for construction, reconstruction, and rehabilitation funding under the IRR Program.

§ 170.143 How are IRR housing access roads and housing street projects funded?

Tribes, following the transportation planning process as required in subpart D, include housing access roads and housing street projects on the Tribal Transportation Improvement Program (TTIP). IRR funds are available after the projects are on the FHWA-approved IRR TIP.

§ 170.144 Can tribes use Federal-aid highway funds, including IRR funds, for toll and ferry facilities?

Yes, Tribes can use Federal-aid highway funds, including IRR funds, to study, design, construct, and operate toll highways, bridges, tunnels, ferry boats and ferry terminal facilities. Tribes are authorized to study, design, construct, and operate these facilities because tribes are public authorities.

§ 170.145 How does a tribe initiate construction of a toll highway, bridge or tunnel?

To initiate construction of a toll highway, bridge, or tunnel, a tribe must:

(a) Enter into a toll revenue agreement with the Secretary of Transportation under 23 U.S.C. 129; and

(b) If IRR funds are used, enter into a self-governance agreement or self-determination contract with the Secretary of the Interior.

§ 170.146 What is the Federal share of a toll highway, bridge or tunnel project?

The Federal share is a maximum of 80 percent for conversion of an existing

toll-free highway, bridge or tunnel to a toll facility or 80 percent for construction of a new toll facility.

§ 170.147 How does a tribe initiate construction of ferry boats and ferry terminal facilities?

To initiate construction of ferry boats and ferry terminal facilities, a tribe must follow the procedures defined in 23 U.S.C. 129(c).

§ 170.148 How can tribes find out more information about designing and operating a toll highway, bridge or tunnel?

Information on designing and operating a toll highway, bridge or tunnel is available from the International Bridge, Tunnel and Turnpike Association. This is a Washington, DC-based organization that maintains an address directory of its membership and serves as an information clearinghouse and research center. It also conducts surveys and studies and publishes a variety of reports, statistics, and analyses. Their web site is located at *http://www.ibtta.org*. Information is also available from FHWA.

Recreation, Tourism, Trails

§ 170.150 Are Federal funds available for a tribe's recreation, tourism, and trails programs?

Yes, Tribes may access funding from the following Federal programs for recreation, tourism, and trails:

(a) IRR Program (23 U.S.C. 204);

(b) Surface Transportation Program—Transportation Enhancement (23 U.S.C. 133);

(c) National Scenic Byway Program (23 U.S.C. 162);

(d) Recreational Trails Program (23 U.S.C. 206);

(e) National Highway System (23 U.S.C. 104);

(f) Public Lands Discretionary Program (23 U.S.C. 204, 205, 214); and

(g) Other funding from other Federal departments.

§ 170.151 How can tribes access non-IRR federal funds for their recreation, tourism, and trails programs?

In order to use non-IRR federal funds for their recreation, tourism, and trails programs, tribes must have a current TIP in place.

(a) To increase opportunities to receive funding for programs that serve tribes' recreation, tourism, and trails goals, it is advisable thattribes:

(1) Have programs identified and scoped for development;

(2) Have viable projects ready for construction, including necessary permits;

(3) Have several projects ready for improvement or construction in any given year.

(b) FHWA provides Federal funds to the states for recreation, tourism, and trails under 23 U.S.C. 104, 133, 162, 204, and 206. States solicit proposals from tribes and local governments in their transportation planning process. Tribes may request:

(1) To administer these programs under the State's locally administered project program;

(2) That the funds be transferred to BIA for tribal self-determination contracts or self-governance agreements under the ISDEAA; and

(3) To contract directly with FHWA.

(c) Congress provides funds under 23 U.S.C. 205 and 214 for activities for Federal agencies such as the Bureau of Land Management, National Park Service, Forest Service, Bureau of Reclamation, and the Department of Defense. In accordance with Federal policy these agencies must work with tribal governments to identify and include tribal priority improvement projects on their TIP.

(1) Tribes can contract with all agencies within the Department of the Interior under the ISDEAA for this work.

(2) For agencies outside the Department of the Interior, funds are transferred to BIA for tribal self-determination contracts or self-governance agreements under the ISDEAA.

(d) In order to use National Scenic Byway funds, the project must be on a road designated as a state or Federal scenic byway.

§ 170.152 Can IRR Program funds be used for recreation, tourism, and trails programs?

Yes, a tribe, tribal organization, tribal consortium or BIA may fund activities for recreation, tourism, and trails programs if they are included in the IRR TIP.

§ 170.153 What types of activities may tribes perform under a recreation, tourism, and trails program?

(a) The following are some examples of activities that tribes may perform under a recreation, tourism, and trails program:

(1) Transportation planning for tourism and recreation travel;

(2) Adjacent vehicle parking areas;

(3) Development of tourist information and interpretative signs;

(4) Provision for non-motorized trail activities including pedestrians and bicycles;

(5) Provision for motorized trail activities including all terrain vehicles, motorcycles, snowmobiles, etc.;

(6) Construction improvements that enhance and promote safe travel on trails;

(7) Safety and educational activities;

(8) Maintenance and restoration of existing recreational trails;

(9) Development and rehabilitation of trailside and trailhead facilities and trail linkage for recreational trails;

(10) Purchase and lease of recreational trail construction and maintenance equipment;

(11) Safety considerations for trail intersections;

(12) Landscaping and scenic enhancement 23 U.S.C. 319;

(13) Bicycle Transportation and pedestrian walkways 23 U.S.C. 217; and

(14) Trail access roads.

(b) The items listed in paragraph (a) of this section are not the only activities that are eligible for recreation, tourism, and trails funding. The funding criteria may vary with the specific requirements of the non-IRR programs.

(c) Tribes may use IRR funds for any activity that is eligible for Federal funding under any provision of title 23 of the United States Code.

§ 170.154 Can roads be built in roadless and wild areas?

Under 25 CFR part 265 no roads can be built in roadless and wild areas.

Highway Safety Functions

§ 170.155 What Federal funds are available for a tribe's highway safety activities?

The following Federal funds are available for a tribe's highway safety activities:

(a) IRR funds, highway safety program funds under 23 U.S.C. 402;

(b) Occupant protection program funds under 23 U.S.C. 405;

(c) Alcohol traffic safety program funds under 23 U.S.C. 408;

(d) Alcohol-impaired driving countermeasures; and

(e) Funding for highway safety activities from the U.S. Department of Health and Human Services (HHS) under 23 U.S.C. 410.

§ 170.156 How can tribes obtain funds to perform highway safety projects?

There are two methods to access National Highway Traffic Safety Administration (NHTSA) and other FHWA safety funds for highway safety projects:

(a) FHWA provides safety funds to BIA under 23 U.S.C. 402. BIA annually solicits proposals from tribes for use of these funds. Proposals are processed under 25 CFR part 181. Tribes may

administer these funds under the ISDEAA.

(b) FHWA provides funds to the states under 23 U.S.C. 402, 405, 408, 410, and 412. States annually solicit proposals from tribes and local governments. Tribes may request that state DOTs agree to allow FHWA safety funds to be transferred to DOI so that they can be administered by the tribe under the ISDEAA. Alternatively, tribes can enter into contracts directly with FHWA.

§ 170.157 How can IRR funds be used for highway safety and impaired driver initiatives?

A tribe, tribal organization, tribal consortium, or BIA may fund projects to improve highway safety. Those projects that are not fully funded by BIA-administered Indian highway safety program must be incorporated into the FHWA-approved IRR TIP if IRR funds are used to complete funding of the project.

§ 170.158 What types of activities are eligible as highway safety projects?

The following are several examples of some of the activities that can be considered as highway safety projects:

(a) Highway alignment improvement;

(b) Bridge widening;

(c) Pedestrian paths/sidewalks and bus shelters;

(d) Installation and replacement of signs when designated as, or made part of, a highway safety project;

(e) Construction improvements that enhance and promote safe travel on IRR roads, such as guardrail construction and traffic markings;

(f) Development of a safety management system;

(g) Education and outreach highway safety programs, such as use of child safety seats, defensive driving, and Mothers Against Drunk Drivers;

(h) Development of a highway safety plan designed to reduce traffic accidents and deaths, injuries, and property damage;

(i) Collecting data on traffic-related deaths, injuries and accidents;

(j) Impaired driver initiatives;

(k) Child safety seat programs; and

(l) Purchasing necessary specific traffic enforcement equipment, such as radar equipment, breathalyser, video cameras.

§ 170.159 Are other funds available for a tribe's highway safety efforts?

Yes, Tribes should seek grant and program funding for highway safety activities from appropriate Federal, state, and local agencies and private grant organizations.

Non-Road Transportation Facilities

§ 170.160 Can IRR Program funds be used for construction of runways, airports, and heliports?

No, IRR Program funds cannot be used to construct or improve runways, airports or heliports which provide service to Indian reservations.

§ 170.161 Can IRR Program funds be used for construction of airport and heliport access roads?

Yes, IRR Program funds can be used for construction of airport and heliport access roads if the access roads are open to the public.

§ 170.162 Are funds available to construct airports, heliports, and runways?

Yes, the Federal Aviation Administration (FAA), DOT, funds projects under the Airport Improvement Program (AIP). (See FAA Advisory Circular No. 150/5370–10A.)

Transit Facilities

§ 170.163 What is transit?

For purposes of this part, transit includes those services, equipment, and functions associated with the public movement of people served within a community or network of communities.

§ 170.164 What is a tribal transit program?

A tribal transit program includes the planning, administration, acquisition of vehicles, and the operation and maintenance of a mass transit system associated with the public movement of people served within a community or network of communities on or near Indian reservations, lands, villages, communities, and pueblos.

§ 170.165 Are IRR Program funds available for tribal transit programs?

Yes, title 23 of the United States Code authorizes the use of IRR Program funds for transit facilities as defined in these regulations.

§ 170.166 How do tribes identify transit needs?

Tribes identify transit needs during the tribal transportation planning process. (See Subpart D.) Transit projects using IRR funds must be included in the FHWA-approved IRR TIP.

§ 170.167 What Federal funds are available for a tribe's transit program?

There are many sources of Federal funds that may help support tribal transit programs. These include, but are not limited to, the programs listed in this section. Note that each program has its own terms and conditions of assistance. For further information on these programs and their use for transit, contact the FTA Regional Transit Assistance Program (RTAP) National Transit Resource Center, 1–800–527–8279 or http://www.ctaa.org/ntrc.

(a) U.S. Department of Agriculture (USDA): community facilities loans, rural development loans, business and industrial loans, rural enterprise grants, commerce, public works and economic development grants, economic adjustment assistance.

(b) U.S. Department of Housing and Urban Development (HUD): community development block grants, supportive housing, tribal housing loan guarantees, resident opportunity and support services.

(c) U.S. Department of Labor: Native American employment and training, welfare-to-work grants.

(d) DOT: welfare-to-work, Indian Reservation Roads, transportation and community and systems preservation, Federal transit capital improvement grants, public transportation for non-urbanized areas, capital assistance for elderly and disabilities transportation, education, and Even Start.

(e) HHS: programs for Native American elders, community service block grants, job opportunities for low-income individuals, Head Start (capital or operating), administration for Native Americans programs, Medicaid, HIV Care Grants, Healthy Start, and the Indian Health Service.

§ 170.168 May tribes or tribal organizations use IRR funds as matching funds for other transit grants or programs?

Yes, a tribe or tribal organization may use IRR funds provided under a self-determination contract or self-governance agreement to meet matching or cost participation requirements for any Federal or non-Federal transit grant or program.

§ 170.169 What transit facilities and related activities that support tribal transit programs are eligible for IRR funding?

Facilities and activities eligible for IRR funding include, but are not limited to:

(a) Acquiring, constructing, supervising or inspecting new, used or re-furbished equipment, buildings, facilities, buses, vans, water craft, and other vehicles for use in mass transportation;

(b) Transit-related intelligent transportation systems;

(c) Rehabilitating, re-manufacturing, and overhauling a transit vehicle;

(d) Preventive maintenance;

(e) Leasing transit vehicles, equipment, buildings, and facilities for use in mass transportation;

(f) Third-party contracts for otherwise eligible transit facilities and activities;

(g) Mass transportation improvements that enhance economic and community development, such as bus shelters in shopping centers, parking lots, pedestrian improvements, and support facilities that incorporate other community services;

(h) Passenger shelters, bus stop signs, and similar passenger amenities;

(i) Introduction of new mass transportation technology;

(j) Provision of fixed route, demand response services, and non-fixed route paratransit transportation services (excluding operating costs) to enhance access for persons with disabilities;

(k) Radio and communication equipment to support tribal transit programs; and

(l) Transit capital project activities authorized by 49 U.S.C. 5302(a)(1).

§ 170.170 May BIA use IRR funds as matching funds for other transit grants or programs?

Yes, BIA may use IRR funds to pay local matching funds for transit facilities and activities funded under 23 U.S.C. 104.

IRR Program Coordinating Committee

§ 170.171 What is the IRR Program Coordinating Committee?

Consistent with the government-to-government relationship the United States has with tribes and with the Federal policy of promoting tribal self-determination, the Secretaries established an IRR Program Coordinating Committee. The Committee provides input and recommendations to BIA and FHWA in developing policies and procedures for the IRR Program. The IRR Program Coordinating Committee supplements government-to-government consultation by coordinating with and obtaining input from tribes, BIA personnel, and FHWA personnel.

§ 170.172 Who are members of the IRR Program Coordinating Committee?

(a) The Committee consists of 12 tribal member representatives (one from each BIA Region) and three non-voting Federal representatives (FHWA, BIA, DOT and DOI–OSG).

(b) The Secretary will select one alternate tribal member from each BIA Region to attend committee meetings in the absence of the regional representative.

(c) The Secretary must select regional tribal representatives and alternates from nominees selected by the region's tribes by tribal resolution or other official action. To the extent possible, the Secretary must make the selection so that there is representation from a broad cross-section of large, medium, and small tribes. Each tribal representative must be a tribal governmental official or employee with authority to act for the tribal government.

(d) For purposes of continuity, the Secretary will appoint the initial tribal representative and alternate from each BIA region to either a 1-, 2-, or 3-year term so that only one-third of the tribal representatives and alternates change every year. Thereafter, all appointments must be for a term of 3 years.

§ 170.173 What are the responsibilities of the IRR Program Coordinating Committee?

(a) Committee responsibilities are to provide input and recommendations to BIA and FHWA during the development or revision of:

(1) BIA/FHWA IRR Stewardship Plan;

(2) IRR Program policy and procedures;

(3) IRR eligible activities determination;

(4) IRR transit policy;

(5) IRR regulations;

(6) IRR management systems policy and procedures; and

(7) National tribal transportation needs.

(b) The Committee may establish work groups to carry out their responsibilities; and

(c) The Committee also reviews IRR program national concerns (including the implementation of these regulations) brought to the attention of the Committee and provides recommendations.

§ 170.174 How often will the IRR Program Coordinating Committee meet?

The Committee holds at least two meetings a year. Additional Committee meetings may be called with the consent of one-third of the Committee members or by BIA or FHWA.

§ 170.175 How does the IRR Program Coordinating Committee conduct business at its meetings?

The Committee conducts business at its meetings as follows:

(a) A quorum consists of eight Committee members of which a majority must be tribal committee members.

(b) The Committee will operate by consensus or majority vote, as determined by the Committee in its protocols.

(c) Any Committee member can submit an agenda item to the Chairperson.

(d) The Committee will work through a committee-approved annual work plan and budget.

(e) Annually, the Committee must elect from among the Committee membership a Chairperson, a Vice Chairperson, and other officers. These officers will be responsible for preparing for and conducting Committee meetings and summarizing meeting results. These officers will also have such duties as the Committee may prescribe.

§ 170.176 How will the IRR Program Coordinating Committee be funded?

The budget will be funded through the IRR Program management funds, not to exceed $150,000 annually.

§ 170.177 How must the Committee keep the Secretary and the tribes informed of the Committee's accomplishments?

The Committee must keep the Secretary and the tribes informed through an annual accomplishment report provided within 90 days after the end of each fiscal year.

Indian Local Technical Assistance Program (LTAP)

§ 170.178 What is the Indian Local Technical Assistance Program?

The Indian LTAP program is authorized under 23 U.S.C. 504(b) and §§ 170.178–192 are provided for information only. The Indian Local Technical Assistance Program (LTAP) assists tribal governments and other IRR Program participants in extending their technical capabilities by providing them greater access to surface transportation technology and transportation training and research opportunities.

§ 170.179 How does the Indian LTAP work?

The Indian LTAP provides funds to Indian technical centers (also known as Tribal Technical Assistance Program Centers (TTAPs)) to provide transportation technology transfer services to tribal governments and IRR Program participants. FHWA can also make grants and enter into cooperative agreements and contracts with tribal governments or a consortium of tribal governments or state transportation departments or universities to provide education, training, technical assistance and related support services to do the following:

(a) Develop and expand tribal expertise in road and transportation areas;

(b) Improve IRR road and bridge performance;

(c) Enhance tribal intergovernmental transportation planning and project selection programs and tribal transit and freight programs;

(d) Develop transportation training courses, manuals, guidelines, and technical resource materials;

(e) Improve tribal programs for tourism and recreational travel;

(f) Develop and share tribal transportation technology and traffic safety information with other government transportation agencies so that they can deal more effectively with transportation-related problems affecting tribal governments;

(g) Operate Indian technical centers in cooperation with state transportation departments and universities;

(h) Enhance new technology implementation in cooperation with the private sector; and

(i) Develop educational programs to encourage and motivate interest in transportation careers among Native American students.

§ 170.180 How is the Indian LTAP funded?

FHWA uses Highway Trust Funds to fund the Indian LTAP program. BIA may only use IRR administrative funding for Indian LTAP centers. These funds may be used to operate Indian LTAP centers and to develop training materials and products for these centers. The Indian LTAP centers are encouraged to apply for supplemental funding from other sources to accommodate their needs.

§ 170.181 How do tribes receive information about opportunities under the Indian LTAP?

(a) FHWA announces Indian LTAP grant, cooperative agreement, and contracting opportunities in the **Federal Register**. The announcements state that tribal governments and consortia are eligible for these awards, indicate the amount of funds available and provide any eligibility criteria.

(b) FHWA sends the information in paragraph (a) of this section to BIA for distribution to tribal governments and consortia. BIA must provide written notice to tribal governments and consortia.

(c) FHWA notifies tribal governments and consortia if they receive grant awards.

§ 170.182 How are Indian LTAP grant, cooperative agreement, and contracting recipients selected?

A selection committee of Federal and tribal representatives from the region's Indian LTAP advisory committee (see § 170.189) reviews the proposals of eligible applicants and recommends the award recipient(s). FHWA selects recipients consistent with applicable law.

§ 170.183 Can tribes or tribal organizations enter into a contract or agreement for Indian LTAP funds under the ISDEAA?

Yes, if selected for award, a tribe or tribal organization may request that FHWA allocate the available funds to BIA and a tribe or tribal organization may enter into a self-determination contract or self-governance agreement for the activities under the ISDEAA.

§ 170.184 What services do Indian LTAP centers provide?

(a) The Indian LTAP centers:

(1) Provide training materials and present workshops to tribal personnel and IRR Program participants;

(2) Act as information clearinghouses for tribal governments and Indian-owned businesses on transportation-related topics; and

(3) Provide technical assistance on transportation technology and other transportation topics as requested by tribal staff and IRR Program participants.

(b) Unless otherwise stated in an Indian LTAP agreement, an Indian technical assistance program center must, at a minimum:

(1) Maintain a current mailing/contact list including, at a minimum, each tribe/tribal consortia and IRR Program participants within the service area;

(2) Publish a quarterly newsletter and maintain a web site;

(3) Conduct and/or coordinate 10 workshops per year;

(4) Maintain a library of technical publications and video tapes;

(5) Provide technical assistance to IRR Program participants;

(6) Hold two advisory committee meetings a year;

(7) Develop a yearly action plan in consultation with the advisory committee;

(8) Coordinate with state LTAPs, other Indian technical centers, and Rural Technical Assistance Program (RTAP) centers, tribal governments or consortia and local planning and transportation agencies to share and exchange publications, video tapes, training material, and conduct joint workshops;

(9) Consult with tribes, tribal consortia, and IRR Program participants concerning technical assistance and training desired; and

(10) Prepare an annual report and distribute this report to service area tribes.

§ 170.185 How does a tribe obtain services from an Indian LTAP center?

A tribe that wants to obtain services should contact the Indian LTAP center serving its service area or its BIA regional road engineer. Information about the centers and the services provided can be found on the Internet at the following address http://www.irr.bia.gov.

§ 170.186 Do Indian LTAP centers offer similar services provided by state LTAPs?

Yes, however, Indian LTAP centers are primarily responsible for increasing the capacity of tribal governments to administer transportation programs. State LTAPs also provide services to local and rural governments, including tribal governments. Indian LTAP centers should coordinate education and training opportunities with state LTAP centers to maximize resources.

§ 170.187 What can tribes do if LTAP services are unsatisfactory?

Tribal governments can make their concerns known to the Indian LTAP Center Director, FHWA and/or BIA. If the center does not adequately address these concerns in writing within 30 calendar days, the tribal government may request any or all of the following:

(a) A special meeting with the Center's Director and staff to address the concern;

(b) A review of the Center's performance by FHWA;

(c) Services from other Indian LTAP centers; or

(d) That the center's cooperative agreement not be funded in the subsequent year.

§ 170.188 How are Indian LTAP centers managed?

Each center is managed by its Center Director and staff, with the advice of its advisory committee under the LTAP agreements.

§ 170.189 What does the Indian LTAP center advisory committee do?

(a) The advisory committee consists of one BIA Regional Road Engineer, one FHWA representative, one state DOT representative, and at least five tribal representatives from the service area. The advisory committee may, among other activities:

(1) Recommend center policies;

(2) Review and approve the annual action plan for submission to FHWA for approval;

(3) Provide direction on the areas of technical assistance and training;

(4) Review and approve the annual report for submission to FHWA for approval;

(5) Develop recommendations for improving center operation services and budgets; and

(6) Assist in developing goals and plans for obtaining or using supplemental funding.

(b) The advisory committee must meet at least twice a year. Tribal representatives may request IRR funding to cover the cost of participating in these committee meetings.

§ 170.190 How are tribal advisory committee members selected?

(a) The LTAP center requests nominations from tribal governments and consortia within the service area for tribal transportation representatives to serve on the advisory committee.

(b) Tribes from the service area select tribal committee members from those nominated.

§ 170.191 How are tribal representatives nominated and selected?

In its written notice to tribal governments and consortia announcing opportunities under the Indian LTAP program, FHWA requests nominations within each Indian LTAP's service area for representatives to serve on the service area advisory committee. Forty-five days after the request for nominations, FHWA will notify tribal governments and consortia of the nominees for the service area. Each tribe then has 30 days to notify FHWA of its selection from the nominees.

§ 170.192 Who reviews the performance of Indian LTAP centers?

FHWA, BIA, advisory committees, and tribes review the performance of the Indian LTAP centers.

LTAP-Sponsored Education and Training Opportunities

§ 170.193 What LTAP-sponsored transportation training and educational opportunities exist?

There are many programs and sources of funding that provide tribal transportation training and education opportunities. Each program has its own terms and conditions of assistance. For further information on these programs and their use for tribal transportation education and training opportunities, contact the Regional Indian LTAP center or the BIA Regional Road Engineer. Appendix B to this subpart contains a list of programs and funding sources.

§ 170.194 Where can tribes get scholarships and tuition for LTAP-sponsored education and training?

Tribes can get tuition and scholarship assistance for LTAP-sponsored education and training from the following sources:

(a) LTAP centers;

(b) BIA-appropriated funds (for approved training); and

(c) IRR funds (for education and training opportunities and technical assistance programs related to developing skills for performing IRR Program activities).

Appendix A to Subpart B

Allowable Uses of IRR Program Funds

A. IRR Program Funds Can Be Used For the Following Planning and Design Activities:

1. Planning and design of IRR transit facilities eligible for IRR construction funding:
2. Planning and design of IRR roads and bridges.
3. Planning and design of transit facilities that provide access to or are located within an Indian reservation or community.
4. Transportation planning activities, including planning for tourism and recreational travel.
5. Development, establishment, and implementation of tribal transportation management systems such as safety, bridge, pavement, and congestion management.
6. Tribal transportation plans and transportation improvement programs (TIPS).
7. Research for coordinated technology implementation program (CTIP).
8. Traffic engineering and studies.
9. Identification and evaluation of accident prone locations.
10. Tribal transportation standards.
11. Preliminary engineering studies.
12. Interagency program/project formulation, coordination and review.
13. Environmental studies and archeological investigations directly related to transportation programs and projects.
14. Costs associated with obtaining permits and/or complying with tribal, Federal, state, and local environmental, archeological and natural resources regulations and standards.
15. Development of natural habitat and wetland conservation and mitigation plans, including plans authorized under the Water Resources Development Act of 1990, 104 Stat. 4604 (Water Resources Development Act).
16. Architectural and landscape engineering services related to transportation programs.
17. Engineering design related to transportation programs, including permitting activities.
18. Inspection of bridges and structures.
19. Indian local technical assistance program (LTAP) centers.
20. Highway and transit safety planning, programming, studies and activities.
21. Tribal employment rights ordinance (TERO) fees.
22. Purchase or lease of advanced technological devices used for transportation planning and design activities such as global positioning units, portable weigh-in-motion systems, hand held data collection units, related hardware and software, etc.
23. Planning, design and coordination for Innovative Readiness Training projects.
24. Transportation planning and project development activities associated with border crossings on or affecting tribal lands.
25. Public meetings and public involvement activities.
26. Leasing or rental of equipment used in transportation planning or design programs.
27. Transportation-related technology transfer activities and programs.
28. Educational activities related to bicycle safety.
29. Planning and design of mitigation of damage to wildlife, habitat, and ecosystems caused by a transportation project.
30. Evaluation of community impacts such as land use, mobility, access, social, safety, psychological, displacement, economic, and aesthetic impacts.
31. Acquisition of land and interests in land required for right-of-way, including control of access thereto from adjoining lands, the cost of appraisals, cost of examination and abstract of title, the cost of certificate of title, advertising costs, and any fees incidental to such acquisition.
32. Cost associated with relocation activities including financial assistance for displaced businesses or persons and other activities as authorized by law.
33. On the job education including classroom instruction and pre-apprentice training activities related to transportation planning.
34. Other eligible activities as approved by FHWA.
35. Any additional activities identified by IRR Program Coordinating Committee guidance and approved by the appropriate Secretary (see § 170.173).

B. IRR Program Funds Can Be Used for the Following Construction and Improvement Activities

1. Construction, reconstruction, rehabilitation, resurfacing, restoration, and operational improvements for IRR roads and bridges including bridges and structures under 20 feet in length.
2. Construction or re-construction of IRR roads and bridges necessary to accommodate other transportation modes.
3. Construction of toll roads, bridges and tunnels, and toll and non-toll ferry boats and terminal facilities, and approaches thereto (except when on the Interstate System) to the extent permitted under 23 U.S.C. 129.
4. Construction of projects for the elimination of hazards at railway-highway crossings, including the separation or protection of grades at crossings, the reconstruction of existing railroad grade crossing structures, and the relocation of highways to eliminate grade crossings.
5. Installation of protective devices at railway-highway crossings.
6. Transit facilities, whether publicly or privately owned, that serve Indian reservations and other communities or that provide access to or are located within an Indian reservation or community (See §§ 170.163–170.170 for additional information).
7. Engineered pavement overlays that add to the structural value and design life or increasing the skid resistance of the pavement.
8. Tribally-owned, post-secondary vocational school roads and bridges.
9. Road sealing.
10. Double bituminous surface and chip seals that are part of a predefined stage of construction or form the final surface of low volume roads.
11. Seismic retrofit, replacement, rehabilitation, and painting of bridges.
12. Application of calcium magnesium acetate, sodium acetate/formate, or other

environmentally acceptable, minimally corrosive anti-icing and de-icing compositions on bridges, and approaches thereto and other elevated structures.

13. Installation of scour countermeasures for bridges and other elevated structures.

14. Special pedestrian facilities built in lieu of streets or roads, where standard street or road construction is not feasible.

15. Interpretive signs, standard traffic regulatory and guide signs which are culturally relevant (native language, symbols, etc.) that are a part of transportation projects.

16. Traffic barriers and bridge rails.

17. Engineered spot safety improvements resulting from safety studies.

18. Planning and development of rest areas, recreational trails, parking areas, sanitary facilities, water facilities, and other facilities which accommodate the traveling public.

19. Public approach roads and interchange ramps which meet the definition of an Indian reservation road.

20. Construction of roadway lighting and traffic signals.

21. Adjustment or relocation of utilities directly related to roadway work, not required to be paid for by local utility companies.

22. Conduits crossing under the roadway to accommodate utilities which are part of future development plans.

23. Restoration of borrow and gravel pits created by projects funded from the IRR Program.

24. Force account and day labor work, including materials and equipment rental, being performed in accordance with approved plans and specifications.

25. Experimental features where there is a planned monitoring and evaluation schedule.

26. Capital and operating costs for traffic monitoring, management, and control facilities and programs.

27. Handling traffic and pedestrians through construction zones.

28. Construction engineering including contract/project administration, inspection, and testing.

29. Construction of temporary and permanent erosion control, including landscaping and seeding of cuts and embankments.

30. Landscape and roadside development features.

31. Marine terminals as intermodal linkages.

32. Construction of visitor information centers and related items.

33. Other appropriate public road facilities such as visitor centers as determined by the Secretary of Transportation.

34. Facilities adjacent to roadways to separate pedestrians and bicyclists from vehicular traffic for operational safety purposes, or special trails on separate rights-of-way.

35. Construction of pedestrian walkways and bicycle transportation facilities, such as a new or improved lane, path, or shoulder for use by bicyclists and a traffic control device, shelter, or parking facility for bicycles.

36. Facilities adjacent to roadways to separate modes of traffic for safety purposes.

37. Acquisition of scenic easements and scenic or historic sites provided they are part of an approved project or projects.

38. Debt service on bonds or other debt financing instruments issued to finance IRR construction and project support activities.

39. Any project to encourage the use of carpools and vanpools, including provision of carpooling opportunities to the elderly and individuals with disabilities, systems for locating potential riders and informing them of carpool opportunities, acquiring vehicles for carpool use, designating existing highway lanes as preferential carpool highway lanes, providing related traffic control devices, and designating existing facilities for use for preferential parking for carpools.

40. Fringe and corridor parking facilities including access roads, buildings, structures, equipment improvements, and interests in land.

41. Adjacent vehicular parking areas.

42. Costs associated with obtaining permits and/or complying with tribal, Federal, state, and local environmental, archeological, and natural resources regulations and standards on IRR projects.

43. Seasonal transportation routes, including snowmobile trails, ice roads, overland winter roads, and trail markings when designed and constructed with requirements defined in § 170.130.

44. Tribal fees such as employment taxes (TERO), assessments, licensing fees, permits, and other regulatory fees.

45. On the job education including classroom instruction and pre-apprentice training activities related to IRR construction projects such as equipment operations, surveying, construction monitoring, testing, inspection and project management.

46. Installation of advance technological devices on IRR facilities such as permanent weigh-in-motion systems, informational signs, intelligent transportation system hardware, etc.

47. Tribal, cultural, historical, and natural resource monitoring, management and mitigation.

48. Mitigation activities required by tribal, state, or Federal regulatory agencies and 42 U.S.C. 4321, *et seq.*, the National Environmental Policy Act (NEPA).

49. Leasing or rental of construction equipment.

50. Coordination and construction materials for innovative readiness training projects such as the Department of Defense (DOD), the American Red Cross, the Federal Emergency Management Agency (FEMA), etc.

51. Emergency repairs on IRR roads, bridges, trails, and seasonal transportation routes.

52. Public meetings and public involvement activities.

53. Construction of roads on dams and levees.

54. Transportation enhancement activities as defined in 23 U.S.C. 101(a)(35).

55 Modification of public sidewalks adjacent to or within IRR transportation facilities.

56. Highway and transit safety infrastructure improvements and hazard eliminations.

57. Transportation control measures such as employer-based transportation management plans, including incentives, shared-ride services, employer-sponsored programs to permit flexible work schedules and other activities listed in section 108(f)(1)(A) (other than clause (xvi) of the Clean Air Act, (42 U.S.C. 7408(f)(1)(A))).

58. Necessary environmental restoration and pollution abatement.

59. Trail development and related activities as identified in §§ 170.150–170.154.

60. Development of scenic overlooks and information centers.

61. Natural habitat and wetlands mitigation efforts related to IRR road and bridge projects, including:

a. Participation in natural habitat and wetland mitigation banks, including banks authorized under the Water Resources Development Act, and

b. Contributions to tribal, statewide and regional efforts to conserve, restore, enhance, and create natural habitats and wetland, including efforts authorized under the Water Resources Development Act.

62. Mitigation of damage to wildlife, habitat and ecosystems caused as a result of a transportation project.

63. Construction of permanent fixed or moveable structures for snow or sand control.

64. Cultural access roads.

65. Other eligible items as approved by the Federal Highway Administration (FHWA).

66. Any additional activities identified by IRR Program Coordinating Committee and approved by the appropriate Secretary (see § 170.173).

Appendix B to Subpart B

Sources of Tribal Transportation Training and Education Opportunities

The following is a list of some of the many sources for tribal transportation training and education opportunities. There may be other sources not listed here.

1. National Highway Institute training courses and fellowships
2. State and local technical assistance program workshops
3. Indian technical assistance center workshops
4. FHWA and FTA Research Fellowships
5. Dwight David Eisenhower Transportation Fellowship (23 U.S.C. 504)
6. Intergovernmental personnel agreement assignments
7. BIA transportation cooperative education program
8. American Association State Highway & Transportation Officials (AASHTO)
9. Transportation Research Board (TRB) workshops
10. Private sector course offerings
11. Union apprenticeships
12. BIA force account operations
13. Intertribal Transportation Association (ITA)
14. FTA RTAP
15. State DOTs
16. Federal-aid highway construction and technology training including skill improvement programs under 23 U.S.C. 140 (b)(c)
17. Minority Business Enterprise (MBE), Women's Business Enterprise (WBE), Disadvantaged Business Enterprise (DBE),

Small Business Enterprise (SBE), Women's Disadvantaged Enterprise (WDBE)
18. Other funding sources identified in § 170.167 (Transit)
19. Department of Labor work force development
20. Indian Employment, Training, and Related Services Demonstration Act, Pub. L. 102–477
21. Garrett Morgan Scholarship (FHWA)
22. Tribal colleges
23. NITI—National Indian Telecommunications Institute
24. AISES—American Indian Science and Engineering Society
25. CTAA—Community Transit Association of America
26. NTRC—National Transit Resource Center
27. CTER—Council for Tribal Employment Rights
28. American Traffic Safety Association
29. APA—American Planning Association
30. PMI—Project Management Institute
31. BIA Indian Highway Safety Program
32. NRC—National Research Council
33. CERT—Council for Energy Resource Tribes
34. FHWA/STIPDG and NSTISS Student Internship Programs (Summer Transportation Internship Program for Diverse Groups and National Summer Transportation Institute for Secondary Students)
35. Environmental Protection Agency (EPA)
36. Department of Commerce (DOC)
37. HUD Community Planning and Development

Subpart C—Indian Reservation Roads Program Funding

§ 170.225 How are IRR Program funds allocated?

These regulations allocate IRR Program funds according to the Tribal Transportation Allocation Methodology (TTAM) by:

(a) Continuing the 2% Transportation Planning Program;

(b) Creating a discretionary pool for IRR High Priority Projects (IRRHPP);

(c) Creating a special provision for additional authorization greater than $275,000,000 that includes:

(1) Increased Funding = Authorization—$275,000,000;

(2) Of Increased Funding, after takedowns, 12.5% added to IRRHPP and 12.5% to Population Adjustment Factor (PAF); and

(3) Distributing the balance of the funds by the following Relative Need Distribution Factor: 50% Cost to Construct + 30% Vehicle Miles Traveled + 20% Population.

§ 170.226 What is the process to allocate IRR Program funds?

The following diagram illustrates the process for allocating IRR Program funds.

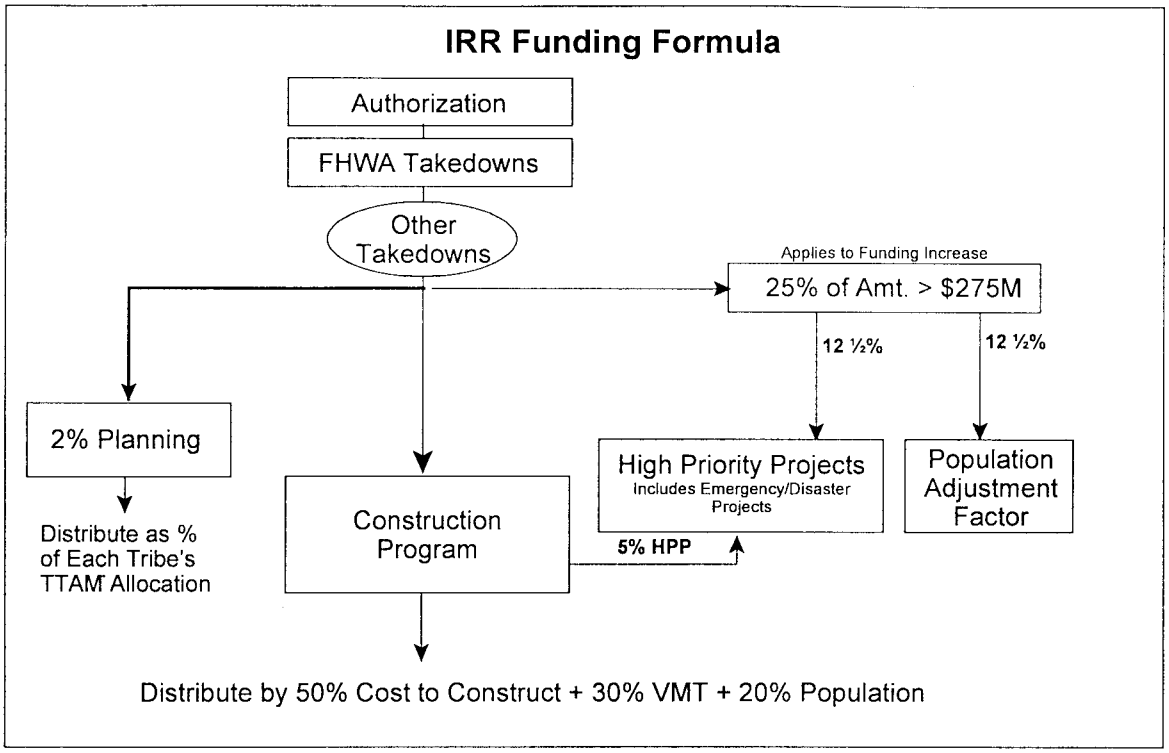

§ 170.232 How does BIADOT allocate and distribute 2% Transportation Planning funds?

BIADOT distributes 2% Tribal Transportation Planning funds described in § 170.404 pro rata according to the tribes' relative need percentage from the Relative Need Distribution Factor. The 2% transportation planning funds must be distributed to the Office of Self-Governance for self-governance tribes that negotiate 2% transportation planning in their AFA's and BIA Regional Offices for all other tribes.

Tribal Transportation Allocation Methodology for IRR Construction

§ 170.235 How does BIA allocate IRR construction program funds to the tribes?

BIA allocates IRR construction program funds by the Tribal Transportation Allocation Methodology as follows:

(a) Creating the IRRHPP funding pool;

(b) For authorizations greater than $275 million, after takedowns, establishing the PAF; and

(c) Allocating the balance of the funds according to the Relative NeedDistribution Factor.

§ 170.236 Does the Relative Need Distribution Factor allocate funding among the individual tribes, or only to the Regions?

The Relative Need Distribution Factor allocates funding to the tribes under 23 U.S.C. § 202(d)(2). The IRR construction

funds are allocated pro rata according to the tribes' relative need percentage from the Funding Formula. The IRR construction funds must be re-programmed to the Office of Self-Governance for Self-Governance tribes that negotiate IRR construction funds in their AFA, and distributed to BIA Regional Offices for all other tribes. However, in order for a tribe's IRR allocation to be expended on a construction project, the project must be included in an FHWA-approved Transportation Improvement Program (TIP).

IRR High Priority Project (IRRHPP) Program

§ 170.245 What is the IRR High Priority Project (IRRHPP) Program?

The IRRHPP Program is a special funding pool for tribes, or governmental subdivision of a tribe that is authorized to administer its own IRR funding, whose annual allocation is insufficient to complete their highest priority project. Eligible applicants may have only one application pending in the IRRHPP at any time. In addition, IRRHPP Program funds can be used in an emergency/disaster on any IRR system route.

§ 170.246 How is an emergency/disaster defined?

An emergency/disaster is defined as damage to an IRR facility identified as vital to the community, such that the facility is rendered impassable or unusable, caused by a natural disaster over a widespread area or catastrophic failure from an external cause.

(a) Examples of a natural disaster include, but are not limited to, floods, earthquakes, tornadoes, landslides, and avalanches or severe storms, such as saturated surface conditions and/or high-water table caused by precipitation over an extended period of time; and

(b) An example of a catastrophic failure includes, but is not limited to, a bridge collapse after being struck by a barge or a truck or a landslide.

§ 170.247 What funding levels are available to the IRRHPP Program?

The base IRRHPP Program funding level is 5% of available IRR Program funds, up to $275,000,000, after takedowns. If the yearly authorization is greater than $275,000,000, an additional amount, after takedowns, is available to IRRHPP. This amount is calculated as follows:

Additional IRRHPP = 12.5% × (Authorization − $275,000,000 (after takedowns)).

§ 170.248 How will BIA and FHWA rank and fund IRRHPP project applications?

(a) BIA and FHWA will fund IRRHPP project applications that are for emergency/disaster projects on a first-come first-serve basis, subject to availability of funds. Emergency/disaster awards are limited to the estimated cost of the emergency (necessary to restore usability of the facility), not to exceed $1,000,000, with certification of cost estimate by the Regional Engineer.

(b) BIA and FHWA will score, rank, and fund all other IRRHPP project applications based upon the following criteria and availability of funds:

(1) Safety hazards with documented fatality and injury accidents;

(2) Number of years since the tribe's last IRR construction project completed;

(3) Number of years that a proposed project has been in the IRRHPP applicant pool;

(4) Percentage of project matched by other non IRR funds (projects with a greater percentage of other matched funds rank ahead of lesser matches);

(5) Amount of funds requested (smaller requests receive greater priority);

(6) Challenges caused by geographic isolation; and

(7) All weather access for: employment, commerce, health, safety, educational resources, and housing.

(c) The Project Scoring Matrix is found in Appendix A to subpart C.

§ 170.249 Is there a limit on the amount of IRRHPP funding available for a project?

Yes, the limit of IRRHPP funding per project is $1,000,000.

§ 170.250 May an IRRHPP project be phased over several years?

Yes, IRRHPP projects may be phased over more than one year, provided the total amount of IRRHPP funds needed to complete the project does not exceed$1,000,000. For example, a tribe might receive $100,000 in year one for pre-construction and $900,000 in year two for construction. The plans, specifications, and estimates (PS&E) must be approved before IRRHPP funds will be provided for construction.

§ 170.251 How do tribes apply for IRRHPP?

A tribe may apply for IRRHPP funds by submitting a complete application package to the Chief of BIADOT.

§ 170.252 What must an application for an IRRHPP include?

The application must include:

(a) Project scope of work (deliverables, budget, timeline);

(b) Amount of IRRHPP funds requested;

(c) Project information addressing ranking criteria identified in § 170.248, or the nature of the emergency/disaster;

(d) Documentation that the project is in the IRR Inventory, or in the case of an emergency/disaster application that it meets the definition of an IRR facility;

(e) Documentation of official tribal action requesting the IRRHPP project; and

(f) An FHWA-approved IRR TIP.

§ 170.253 Are there any transportation activities for which IRRHPP funds cannot be used?

Yes, IRRHPP funds cannot be used for transportation planning or research.

§ 170.254 Who ranks the IRRHPP projects?

BIADOT and FHWA rank IRRHPP projects.

§ 170.255 What is the IRRHPP Award list?

The award list is the ranked IRRHPP projects that have been identified for current year IRRHPP funds, assuming that all current year IRRHPP funds are available for non-emergency projects.

§ 170.256 What is the timeline for the IRRHPP, other than emergency/disaster projects, for any given fiscal year?

The timeline is as follows:

(a) BIADOT will accept applications through March 1 of each year.BIADOT notifies all applicants and Regions of receipt and completeness of application within 30 days of receipt;

(b) During May and June BIADOT and FHWA rank all complete applications;

(c) August 1 BIADOT notifies applicants of award;

(d) BIADOT transfers funds to respective Regions of selected IRRHPP projects no later than September 1;

(e) Regions must obligate funds by September 15; and

(f) September 16 BIADOT redistributes un-obligated funds.

§ 170.257 How does the award of an emergency/disaster project application affect projects on the IRRHPP Award List?

Emergency/disaster projects are funded from October 1—August 31. Projects on the IRRHPP Award List are funded based upon order of rank until current year funds are allocated to IRRHPP projects. Projects not funded will retain order of rank and be placed at the top of the award list the following year, without resubmission of application. Projects that were not ranked high enough to be placed on the IRRHPP Award List must be resubmitted.

Population Adjustment Factor (PAF)

§ 170.263 What is the PAF?

The PAF is a special distribution calculated annually that provides for broader participation in the IRR Program by tribes (or federally recognized governmental subdivision of a tribe that is authorized to administer its own IRR funding) based upon the following population ranges and distribution factors (as further explained in Appendix B to subpart C):

Population range	Distribution factor	Number of tribes*	Funding amount per tribe (minimum base allocation)
Less than 25	1	N_1	MBA × 1
25–100	3.5	N_2	MBA × 3.5
101–1000	5.0	N_3	MBA × 5.0
1001–10,000	6.5	N_4	MBA × 6.5
10,000+	8	N_5	MBA × 8

* The number of tribes in a given population range may vary from year to year.

§ 170.264 What is the distribution factor?

As shown in the table § 170.263, the distribution factor is the multiplier used to determine the relative PAF funding between the population ranges. For example, if $1000 is available for the first population range (less than 25), then the second population range (25–100) will receive $3,500 or 3.5 times the amount available to the first population range.

§ 170.265 What funding levels are available for distribution based on the PAF?

When the yearly amount authorized and appropriated to the IRR program exceeds $275,000,000, then 12.5% of the increase over $275,000,000, after takedowns, is available for distribution.

§ 170.266 What is the Minimum Base Allocation (MBA)?

The MBA is the dollar value to be multiplied by the distribution factor for each population range to determine the distribution of the PAF. The MBA calculation is as follows:

$$\text{MBA} = \frac{\text{total amount available for PAF}}{(1 \times N_1) + (3.5 \times N_2) + (5 \times N_3) + (6.5 \times N_4) + (8 \times N_5)}$$

§ 170.267 What population data is used to determine the PAF?

The population data used to determine PAF is the same data as used for the Population component of the Relative Need Distribution Factor.

Relative Need Distribution Factor

§ 170.270 What is the Relative Need Distribution Factor?

The Relative Need Distribution Factor is a mathematical formula for distributing the IRR construction funds using the following three factors: Cost-to-Construct (CTC), Vehicle Miles Traveled (VMT), and Population (POP). The Relative Need Distribution Factor is as follows:

$A = \alpha \times \{CTC \div \text{Total } C\} + \beta \times \{VMT \div \text{Total } VMT\} + \delta \times \{POP \div \text{Total } POP\}$

Where:

A = % Relative Need for an individual tribe

CTC = Total cost-to-construct calculated for an individual tribe

Total C = Total cost-to-construct calculated for all tribes shown in the IRR inventory

VMT = Total vehicle miles traveled for all routes in the IRR inventory for a given tribe

Total VMT = Total vehicle miles traveled for all routes in the IRR inventory

POP = Population of an individual tribe

Total POP = Total population for all tribes

α, β, δ = 0.50, 0.30, 0.20 respectively = Coefficients reflecting relative weight given to each formula factor

Example:

Tribe X has the following data:

CTC = $51,583,000
Total CTC = $10,654,171,742
VMT = 45,680
Total VMT = 10,605,298
POP = 4,637
Total POP = 1,010,236

A = 0.50 [CTC ÷ Total CTC] + 0.30[VMT ÷ Total VMT] + 0.20[POP ÷ Total POP]

A = 0.50 [51,583,000 ÷10,654,171,742] + 0.30 [45,680 ÷10,605,298] + 0.20 [4,637 ÷1,010,236]

A = 0.00242 + 0.00129 + 0.00092

A = 0.00463 or 0.463%

If construction funds available for the fiscal year are $226,065,139, then the allocation amount would be:

$226,065,139 × 0.00463 = $1,046,682

§ 170.271 What is the Cost-to-Construct component in the Relative Need Distribution Factor?

The Cost-to-Construct component measures the estimated cost of a tribe's transportation projects as a percentage of the estimated cost nationally of all tribes' transportation facilities. Costs are derived from the IRR inventory of eligible IRR transportation facilities developed and approved by tribal governments through Long-Range Transportation Plans (LRTPs).

§ 170.272 What is the Cost-to-Construct for an individual tribe?

The Cost-to-Construct for an individual tribe is the sum of all project costs from the tribe's IRR Inventory.

§ 170.273 What is the BIA methodology of estimating construction costs for transportation facilities?

On an interim basis, the methodology for calculating the Cost-to-Construct is the simplified approach identified in the Cost-to-Construct (Appendix C of this subpart).

§ 170.274 How may BIA and FHWA revise the method for calculating the Cost-to-Construct component of the Relative Need Distribution Factor?

BIA and FHWA, in partnership with the IRR Program Coordinating Committee, will consider revising the method for calculating the Cost-to-Construct component of the Relative Need Distribution Factor. BIA and FHWA may incorporate the following elements in the new methodology:

(a) Include costs for all eligible IRR projects, including transportation facilities that are not roads or bridges;

(b) Take into account regional cost differences while maintaining the integrity of the system by, for example, using an average of local tribal costs,

national tribal costs, and the state project costs from the tribe's local area to derive the underlying cost data from which estimates are generated;

(c) Generate and report total costs by project and tribe;

(d) Create templates that can be easily used at the tribal level;

(e) Include as project costs:

(1) Project Planning;

(2) Project Administration;

(3) Preliminary Engineering;

(4) Construction;

(5) Project Bid Items;

(6) Construction Engineering;

(7) Quality Control; and

(8) Permits, fees and taxes.

§ 170.275 What is the source of the construction cost used to generate the CTC?

The construction cost is derived from the average of the following three project bid tabulation sources:

(a) Tribal bid tabulations;

(b) State bid tabulations for the region of the State in which the tribe's project will be constructed;

(c) National IRR programs bid tabulations; and

(d) If one or more of these bid tabulation sources is unavailable, use the average of the available sources.

§ 170.276 Do all IRR facilities identified in the IRR Inventory count in the Relative Need Distribution Factor at 100% of their CTC and VMT?

No. The CTC and VMT for any facility that is included in or added to the IRR Inventory and is eligible for funding for construction or reconstruction with Federal funds, other than IRR or Public Lands Highways (PLH) funds, must be computed at the non-federal share requirement for matching funds. If, however, the facility falls into one or more of the following categories, then the CTC and VMT factors must be computed at 100%:

(a) All transportation facilities approved and included in the BIA system for funding purposes prior to these regulations; or

(b) Any facility that is not eligible for funding for construction or reconstruction with Federal funds, other than IRR or PLH funding; or

(c) The state, municipality, county, or federal agency provides certification of inability to provide funding for the project and agrees to maintain the completed project under 23 U.S.C. 116.

§ 170.278 What is the VMT component of the Relative Need Distribution Factor and how is it calculated?

VMT is a measure of the IRR transportation system use. VMT is calculated using the sum of the length of IRR route segments in miles multiplied by the Average Daily Traffic (ADT) of the route segment.

§ 170.279 What IRR route segments are used to calculate VMT?

All IRR route segments in the IRR Inventory are used to calculate VMT, but percentage factors are applied.

§ 170.282 What is the Population component of the Relative Need Distribution Factor and how is it determined?

The population component is a factor used to define transportation need based on the number of American Indian or Alaska Native people served. On an interim basis, the population component will use data that is the on- and near-reservation service area population from the most recently published BIA Labor Force Report. The population data of the American Indian and Alaska Native Service Population developed by the Department of Housing and Urban Development, pursuant to the Native American Housing Assistance and Self-Determination Act (NAHASDA), will become the population component used, after the NAHASDA data is updated to reflect the 2000 or subsequent census data.

General Data Appeals

§ 170.285 May a tribe challenge the Cost-to-Construct, Vehicle Miles Traveled, and Population data BIA uses in the Relative Need Distribution Factor?

Yes, a tribe may submit a request to the Regional Director that it revise the data for the tribe that BIA uses in the Relative Need Distribution Factor. Such a request must include any relevant data in the tribe's possession, together with written support for its contention that such data is more accurate than the data the BIA uses for the tribe. The Regional Director must respond within 30 days of receipt of a Relative Need Distribution Factor data correction request.

§ 170.286 When may a tribe submit a Relative Need Distribution Factor data correction request?

A tribe may submit a data correction request at any time. In order to impact the distribution in a given fiscal year, a data correction request must be approved, or any subsequent appeals resolved, by June 1 of the prior fiscal year.

§ 170.287 When must a data correction request be approved?

Unless the Regional Director determines that the existing BIA data is more accurate, the Regional Director must approve the tribe's data correction request and accept the tribe's corrected data. If the Regional Director disapproves the tribe's request, the Regional Director's decision must include a detailed written explanation of the reasons for the disapproval, copies of any supporting documentation the Regional Director relied upon in reaching the decision (other than the tribe's request), and notice of the tribe's right to appeal the decision. If the Regional Director does not approve the tribe's request within 30 days of receipt of the request, the request must be deemed disapproved.

§ 170.288 How does a tribe appeal a disapproval from the Regional Director?

(a) Within 30 days of receipt of a disapproval, or within 30 days of a disapproval by operation of law, a tribe may file a written notice of appeal to the Deputy Commissioner of Indian Affairs, with a copy served upon the Regional Director; and

(b) Within 30 days of receipt of an appeal, the Deputy Commissioner must issue a written decision upholding or reversing the Regional Director's disapproval. Such a written decision must include a detailed written explanation of the reasons for the disapproval, copies of any supporting documentation the Deputy Commissioner relied upon in reaching the decision (other than the tribe's request or notice of appeal), and notice of the tribe's right to appeal the decision to the Interior Board of Indian Appeals pursuant to 25 CFR part 2.

IRR Inventory and Long-Range Transportation Planning (LRTP)

§ 170.290 How is the IRR Inventory used in the Relative Need Distribution Factor?

The IRR Inventory as defined in § 170.445 identifies the transportation need by providing the data used to generate the CTC and VMT components of the Relative Need Distribution Factor.

§ 170.291 How is the IRR inventory developed?

The IRR Inventory is developed through the LRTP process, as defined in § 170.427.

§ 170.292 Are all facilities included in the IRR Inventory used to calculate CTC?

No, projects that have been constructed to their design standard are not eligible for inclusion for purposes of applying the CTC portion of the formula for a period of 5 years after completion of the project.

§ 170.294 Is there a difference for funding purposes between the old BIA Roads Inventory and the IRR Inventory?

Yes, the IRR Inventory defined in this part expands the BIA Roads Inventory for funding purposes, it includes:

(a) All roads, bridges, and other eligible transportation facilities that were previously approved in the BIA system inventory in 1992 and each subsequent year thereafter;

(b) All miles of road that have been constructed using Highway Trust Funds (IRR) since 1983;

(c) All IRR routes;

(d) Non-road facilities; and

(e) Other IRR eligible projects.

§ 170.295 Who is responsible for maintaining the National IRR Inventory Database?

BIA Regional offices are responsible for maintaining, certifying, and entering the data for their region's portion of the National IRR Inventory Database.

§ 170.296 How is the IRR Inventory kept accurate and current?

The IRR Inventory data for a tribe is updated on an annual basis as follows:

(a) The BIA Regional Offices provide the tribes in the region a copy (electronic and hard copy) of the IRR Inventory by November 1st of each year;

(b) The tribe may review the data and advise the Regional Office of errors or omissions. The tribe submits additions and deletions to the IRR Inventory along with authorizing resolutions by May 1;

(c) The BIA Regional Office reviews the tribes' submission for errors or omissions and provides the tribes with their revised inventories by July 1;

(d) The tribe must correct any errors or omissions by August 1;

(e) The BIA Regional Offices certify the data and enter the data into the national IRR Inventory database. Certification of the data must be completed by September 1 for use in the Relative Need Distribution Factor for the following fiscal year;

(f) BIA provides the tribes with a copy (electronic and hard copy) of the Relative Need Distribution Factor distribution percentages by October 1; and

(g) The BIA DOT will approve all submissions from the BIA Regional Offices for inclusion into the National IRR Inventory.

§ 170.297 Is transportation planning included in the IRR Inventory and IRR Transportation Improvement Program (TIP)?

No, only project-specific transportation activities are included in the Inventory and TIP.

§ 170.298 Why exclude transportation planning from the TIP and the IRR Inventory?

Including routine transportation planning creates an undue administrative burden on BIA and tribes. The Inventory is used to generate the CTC and VMT components of the Relative Need Distribution Factor. Excluding non-project related planning does not affect the integrity of the inventory.

§ 170.299 What are the responsibilities of the IRR Program Coordinating Committee for funding issues?

Committee responsibilities are to provide input and recommendations to BIA and FHWA during the development or revision of:

(a) New IRR Inventory Data Format and Form;

(b) Simplified Cost to Construct Methodology;

(1) Formula Calculations;

(2) Formula Program and Design;

(3) Bid Tab Methodology;

(c) Cost Elements, not just roads;

(d) Over-Design Issues;

(e) Inflation Impacts on $1 Million Cap for IRRHPP and Emergency Projects;

(1) IRRHPP Ranking System;

(2) Emergency/disaster expenditures Report; and

(f) Impact of including funded but non-constructed projects in CTC calculation.

Long-Range Transportation Planning

§ 170.300 How does the LRTP process relate to the Relative Need Distribution Factor?

The LRTP process, as explained in subpart D (§ 170.427—170.432) is a uniform process by which the transportation needs and priorities of the tribes are identified. The IRR Inventory is derived from projects identified through the LRTP. It is also a means for identifying projects for the IRRHPP Program.

§ 170.301 Are there cost constraints in the transportation needs identified in the LRTP?

No, since the purpose of the LRTP is to identify need, it is not constrained by costs.

§ 170.302 What are the minimum requirements for a tribe's LRTPs?

At a minimum, the LRTP must:

(a) Document the tribe's public involvement;

(b) List the tribe's eligible IRR projects, costs estimates, and VMT data;

(c) Include inventory data forms for eligible IRR projects;

(d) Describe the tribe's strategy for meeting its transportation need;

(e) Provide documentation from other agencies regarding coordination of projects involving the other agencies; and

(f) Attach official tribal endorsement of LRTP.

§ 170.303 Are all transportation projects identified on the tribe's LRTP used to calculate the tribe's allocation of the national allocation?

No, the tribe's LRTP may include any transportation need or project of the tribe, but only eligible IRR facilities are included in the IRR Inventory and used to calculate the tribe's allocation.

Flexible Financing

§ 170.350 May tribes use flexible financing to finance IRR transportation projects?

Yes, Tribes are entitled to use the flexible financing provisions in Title 23 U.S.C. in the same manner as States to finance IRR transportation projects, unless otherwise prohibited by law.

§ 170.351 How may tribes finance IRR transportation projects that secure payment with IRR funds?

Tribes may issue bonds or enter into other debt financing instruments under 23 U.S.C. 122 with the expectation of payment of IRR funds to satisfy the instruments.

170.352 Can the Secretary of Transportation execute a federal credit instrument to finance IRR projects?

Yes, under 23 U.S.C. 182 and 183, the Secretary of Transportation may enter into an agreement for secured loans or lines of credit for IRR projects meeting the requirements contained in 23 U.S.C. 182. Tribes or BIA may service federal credit instruments. The secured loans or lines of credit must be paid from tolls, user fees, or other dedicated revenue sources.

§ 170.353 Can a tribe use IRR funds as collateral?

Yes, a tribe can use IRR funds as collateral for loans or bonds to finance IRR projects. Upon the request of a tribe, the BIA region will assist the tribe by providing necessary documentation to banks and other financial institutions.

170.354 Can a tribe use IRR funds to leverage other funds?

Yes, a tribe can use IRR funds to leverage other funds.

170.355 Can BIA regional offices borrow IRR funds from each other to assist in the financing and completion of an eligible IRR project?

Yes, Regional offices, in consultation with tribes, may enter into agreements to borrow IRR funds to assist another BIA regional office in financing the

completion of IRR projects. These funds must be repaid within the next fiscal year. No such agreements can be executed during the last year of a transportation authorization act unless IRR funds have been authorized for the next year.

§ 170.356 Can a tribe use IRR funds to pay back loans?

A tribe may use IRR funds to pay back loans or other finance instruments for a project that:

(a) The tribe paid for in advance of the current year using non-IRR Program funds; and

(b) Was included in FHWA-approved IRR TIP.

§ 170.357 Can a tribe apply for loans or credit from a state infrastructure bank?

Yes. Upon the request of a tribe, the BIA region will provide necessary documentation to a state infrastructure bank to facilitate obtaining loans and other forms of credit for an IRR project. A state infrastructure bank is a state or multi-state fund that can offer loans and other forms of credit to help project sponsors, such as tribes, pay for transportation projects.

APPENDIX A TO SUBPART C—IRR HIGH PRIORITY PROJECT SCORING MATRIX

Score	10	5	3	1	0
(a) Accident and fatality rate for proposed route [1].	Severe		Moderate	Minimal	No accidents.
(b) Years since last IRR construction project completed.	Never	Last project more than 10 years ago.	Last project 5-9 years ago.	Last project within last 1 to 4 years.	Currently has project.
(c) Readiness to Proceed to Construction or IRRBP Design Need.	PS&E Complete	Bridge Replacement PS&E development project.	Bridge Rehabilitation PS&E development project.		
(d) Percentage of project matched by other funds.		80% or more by other funds.	20–79% by other funds.	1–19%	No other funds.
(e) Amount of funds requested.		250,000 or less	250,001–500,000	500,001–750,000	Over 750,000.
(f) Geographic isolation	No external access to community.	Substandard Primary access to community.	Substandard Secondary access to community.	Substandard access to tribal facility.	
(g) All weather access for: (1) employment (2) commerce (3) health (4) safety (5) educational resources (6) housing	Addresses all 6 elements.	Addresses 4 or 5 elements.	Addresses 3 elements	Addresses 2 elements	Addresses 1 element.

[1] National Highway Traffic Safety Board standards.

Note: In the event of a tie, the IRR Program Coordinating Committee will determine which project is funded considering accident rates, no prior project, and no access, and available funding.

Appendix B to Subpart C—Population Adjustment Factor

The Population Adjustment Factor allows for participation in the IRR Program by all tribes. This funding formula reservation allocates a set amount of funds each fiscal year to a tribe based on the population range within which the tribe is included, as follows:

EXAMPLE USING $350 MILLION AUTHORIZATION

Population range (step)	No. of tribes	Distribution factor	Step factor	Funding per tribe	Total funding per step
Less than 25	17	1	17	$3,216	$54,665
25–100	66	3.5	231	11,255	742,797
101–1000	309	5	1545	16,078	4,968,059
1001–10,000	137	6.5	890	20,901	2,863,467
10,000+	29	8	232	25,725	746,013
Total			[1] 2,915.50		9,375,000

[1] Total step factor.

The steps to calculate the Population Adjustment Factor are applied as follows:

(a) For each population range, multiply the Distribution Factor by the total number of tribes identified in the population range (Step);

(b) Sum the products of the multiplication in step 1 above to derive a Total Step Factor; Calculate the Difference between the IRR Authorization for the Allocation Year and the 1999 IRR Authorization ($275 Million);

(c) Derive an Annual Adjustment Factor by dividing 12 1/2% of the Difference (step 3 above) by the Total Step Factor; and

(d) Calculate Population Adjustment Factor within each Population Range by multiplying the Distribution Factor for the Population Range by the Annual Adjustment Factor.

The mathematical equation for the Population Adjustment Factor calculation is as follows:

$$PAF_n = DF_n \times \left(\frac{12\tfrac{1}{2}\% \times (\$A - \$275MM)}{\sum (N_1 \times DF_1 \ldots N_5 \times DF_5)} \right)$$

PAF = Population Adjustment Factor
DF = Distribution Factor
$A = IRR Authorization in Allocation Year
$275MM = IRR Authorization in 1999
n = The nth Population Range
1...5 = Population Ranges 1 through 5
N_n = Number of Tribes in the nth Population Range

For example, for $DF_1 = 1.00$; $A = $350MM; $PAF_1 = 1.00 \times \frac{\$9{,}375{,}000}{2{,}915.50} = \$3{,}215.57$

For example, for $DF_3 = 5.00$; $A = $350MM; $PAF_3 = 5.00 \times \frac{\$9{,}375{,}000}{2{,}915.50} = \$16{,}077.86$

The Minimum Base calculation is as follows:

$$MBA = \left(\frac{12\tfrac{1}{2}\% \times (\$A - \$275MM)}{(N_1 + 3.5N_2 + 5N_3 + 6.5N_4 + 8N_5)} \right)$$

MBA = Minimum Base Allocation
Distribution Factors = 1, 3.5, 5, 6.5, and 8
$A = IRR Authorization in Allocation Year
n = The nth Population Range
1...5 = Population Ranges 1 through 5
N_n = Number of Tribes in the nth Population Range

The Population Adjustment Factor (PAF) calculation is as follows:

$PAF_n = MBA \times Df_n$
PAF = Population Adjustment Factor
MBA = Minimum Base Allocation
DF = Distribution Factor
n = The nth Population Range
1...5 = Population Ranges 1 through 5

Examples of the Population Adjustment Factor calculation for $350 Million Authorization:

$$MBA = \frac{12\tfrac{1}{2}\% \times (\$350MM - \$275MM)}{17 + 3.5(66) + 5(309) + 6.5(137) + 8(29)} = \frac{\$9{,}375{,}000}{2{,}915.50} = \$3{,}215.57$$

$PAF_n = MBA \times Df_n$

$PAF_1 = \$3{,}215.57 \times 1.00 = \$3{,}215.57$ = PAF Funding per Tribe for Step 1

$PAF_2 = \$3{,}215.57 \times 3.50 = \$11{,}254.50$ = PAF Funding per Tribe for Step 2

$PAF_3 = \$3{,}215.57 \times 5.00 = \$16{,}077.86$ = PAF Funding per Tribe for Step 3

$PAF_4 = \$3{,}215.57 \times 6.50 = \$20{,}901.22$ = PAF Funding per Tribe for Step 4

$PAF_5 = \$3{,}215.57 \times 3.50 = \$25{,}754.58$ = PAF Funding per Tribe for Step 5

POPULATION ADJUSTMENT FACTOR CALCULATED FOR $300 MILLION AUTHORIZATION

[Authorization—$300,000,000; Increase > $275MM, $25,000,000; Pop. Adj. Factor—$3,125,000]

Population range	No. of tribes	Distribution factor	Step factor	Funding per tribe	Total funding for population range
0 to 24	17	1.00	17.0	$1,071.86	$18,222
25 to 100	66	3.50	231.0	3,751.50	247,599
101 to 1,000	309	5.00	1,545.0	5,359.29	1,656,020
1,001 to 10,000	137	6.50	890.5	6,967.07	954,489
10,000+	29	8.00	232.0	8,574.86	248,671
Pop. adj. factor: 3,125,000	558		[1] 2,915.5		3,125,000

[1] Total step factor.

Appendix C to Subpart C—Cost-to-Construct

(Appendix C includes Tables 1–7)

This method utilizes the basic concepts of the Bureau of Indian Affairs' ''S*implified Approach to Compute the Cost-to-Construct*''. The BIA concept has been modified, under this proposed method, to include computing costs for High Capacity Roads (multi-lane roads), non-road projects (snowmobile trails, boardwalks, footpaths, etc.) and other eligible projects.

This method offers a straightforward approach to calculate the Cost-to-Construct and is relatively easy to check. The theory behind this method is that the inventory and project need databases are used to determine, within reasonable limits, the costs of a new transportation facility or in the case of an existing facility, the existing condition of the facility and the costs that will be necessary to construct the facility to an adequate standard. For example, the Cost-to-Construct for a particular section of IRR system road is the cost required to improve the road's existing condition to a condition that would meet the Adequate Standard Characteristics. (see Table 1) Further, the standards for the geometrics and surface type for a roadway vary based on the road's functional classification, average daily traffic, and terrain. The Adequate Standard Characteristics table also includes standards for High Capacity roads and intermodal facilities.

The simplified approach will use cost indexes for five categories of cost. Four of the categories are Grade and Drain Costs, Aggregate Costs, Pavement Costs, and Incidental Costs. Information from the inventory database must provide an indication of the need for construction in each of these four categories. The fifth category, Bridge Costs, are derived from the BIA Bridge Study. The simplified approach includes no systematic method for indexing Rights-of-Way, Bridge, other pre-construction costs, and other transportation facilities.

BILLING CODE 4310–LY–P

TABLE 1 ADEQUATE STANDARD CHARACTERISTICS

ADEQUATE STANDARD NUMBER	1 2 3	4 5 6	7 8 9	10 11 12	13	14	15	16 17 18	19 20
BIA CLASS	2 RURAL MINOR ARTERIALS		4 RURAL MAJOR COLLECTOR	4 RURAL LOCAL	4 CITY MINOR ARTERIAL	4 CITY COLLECTOR	3* CITY LOCAL	1 MAJOR ARTERIAL	5** 6** NON-MOTORIZED TRAILS AND OTHER FACILITIES
20 YEAR PROJECTED ADT ***	400 AND OVER	UNDER 400	UNDER 50 - EARTH 50-250 - GRAVEL OVER 250 - PAVED		400 AND OVER	250 TO 400	UNDER 250	OVER 10,000	N/A
TERRAIN ****	(1) (2) (3)	(1) (2) (3)	(1) (2) (3)	(1) (2) (3)	N/A	N/A	N/A	(1) (2) (3)	N/A
MINIMUM ROADWAY WIDTH (INCLUDING SHOULDERS)	36'	32'	32'	28'	50' TOTAL PARKING 7' TURNING 12'	21' TO 38' DEPENDING ON TURNING LANES AND PARKING			DEPENDS ON FACILITY
SURFACE TYPE	PAVED	PAVED	PAVED / GRAVEL / EARTH		PAVED			PAVED	DEPENDS ON FACILITY
SHOULDER WIDTH	6'	4'	4'	2'	N/A			6' MINIMUM	N/A
SHOULDER TYPE	PAVED	PAVED	PAVED / GRAVEL / EARTH		N/A			PAVED	N/A

* Local Class 3 roads may be earth, gravel or paved, depending on tribal customs, economics, or environmental.

** Class 5 trails encompasses non-road projects such as paths, trails, walkways, or other designated types of routes for public use by foot traffic, bicycles, snowmobiles, or other uses to provide for the general access of non-vehicular traffic. Class 6 includes other transportation facilities such as ferry terminals, transit facilities, etc.

*** Use default ADT + 20 where impractical to acquire ADTs or for proposed roads unless a traffic analysis proves otherwise. Where volumes are practical to acquire, they should be acquired and traffic projected at 2% per year.

**** (1) = Flat; (2) = Rolling; (3) = Mountainous

TABLE 2.—FUTURE SURFACE TYPE

Const. need	Adequate Std. No.	BIA system class	Class No.	ADT +20	Surface type
4	1, 2, 3, 4, 5, 6	Rural Minor Arterials	2	400–10,000	Paved.
4	16, 17, 18	Rural Major Arterials	1	> 10,000	Paved.
4	10, 11, 12	Rural Locals	5	51–399	Gravel.
4	13	Minor Arterial	4	400–10,000	Paved.
4	14	Collector	4	251–399	Paved.
4	15	Local	3	50–250	(Earth, Gravel, Paved)*.
1	7, 8, 9	Rural Major Collector	4	< 50	Earth.
				**50–250	Gravel.
				>250	Paved.
1	10, 11, 12	Rural Locals	5	< 50	Earth.
				**50–250	Gravel.
				**>250	Paved.
1	15	Local	3	< 50	Earth.
				**50–250	Gravel.
				**>250	Paved*.

* Local class 3 roads may be earth, gravel or paved depending on tribal customs, economics or environmental conditions.
** Use default ADT +20 where impractical to acquire ADT's or ADT is zero. Where volumes are practical to acquire, they should be acquired, and traffic projected at 2% per year.

A. Basic Procedures

1. A long-range plan must be developed for those tribes without data or that lack inventory data and updated for those tribes that have existing inventory systems. The plan would identify the system, collect the inventory data and create cost estimates for all ''Needs.'' Once the inventory database is current and project need is identified, the cost-to-construct for those projects can be developed. The method for determining the estimated cost to construct of a proposed transportation project is accomplished through the following step-by-step process:

(a) Determine Future Surface Type for project (see table 2);

(b) Calculate 20 year Projected ADT based upon tribal economic and transportation development planning;

(c) Determine Class of project, e.g., local, rural local, rural major collector, other, utilizing projected ADT;

(d) Identify project terrain as flat, rolling, or mountainous;

(e) Identify Adequate Standard Characteristics (ASC) by applying Class, 20 year Projected ADT, and Terrain to ASC (see Table 1);

(f) Identify the project's estimated construction cost per standard industry measurement (SIM) (e.g., cost per mile, cost per linear foot) for the following components of construction: Aggregate, Paving, Grade/Drain, and Incidental (see tables 3–7);

(g) Multiply the estimated construction cost per SIM for each component of construction by the length of the route or proposed project to determine the estimated cost for each component of construction; and

(h) Calculate the estimated cost for the route or proposed project by adding together the estimated costs for each component of construction.

2. The method for determining the estimated cost to reconstruct or rehabilitate an existing transportation project is determined in the same manner as a proposed transportation project, except that the existing condition of the project is evaluated to determine the percentage to be applied to the estimated cost for each component of construction that will be included in the estimated cost for reconstruction:

(a) Evaluate existing condition of road or reconstruction project in accordance with applicable management systems, guidelines or other requirements;

(b) Identify percentage of allowable estimated cost for each component of construction by applying the Adequate Standards Characteristics (ASC) and existing condition to the percent cost requirement tables for aggregate, paving, grade/drain, incidental, and bridge;

(c) Multiply estimated construction cost for each component of construction by the corresponding percentage of allowable estimated cost to determine the estimated reconstruction cost for each component; and

(d) Calculate the estimated reconstruction cost by adding together the estimated reconstruction costs for each component of construction.

3. The Average Daily Traffic (ADT) for existing and proposed roads is determined by measuring either actual traffic counts, estimated traffic counts based on industry standard modeling methods, or the following default values: Functional Class 2 roads is 100 ADT, Functional Class 4 roads is 50 ADT, Functional Class 3 Streets-roads is 25 ADT, and Functional Class 4 motorized Trails is 20 ADT. Functional Class 1 roads must have an actual ADT greater than 10,000. This traffic count data is incorporated into the IRR road inventory for application into the RNF Cost-to-Construct calculations.

4. The 20-year projected ADT is calculated using growth rates established by current industry models or by a minimum default using a 2% growth rate, except where the default is used for ADT then the following values apply: Class 2 roads is 100 ADT+20, Class 4 roads is 50 ADT+20, Class 3 (Streets) is 25 ADT+20, and Motorized Trails is 20 ADT+20.

5. Functional Classification. As a part of the IRR Inventory system management, all facilities included on or added to the IRR System must be classified according to the following functional classifications as follows (Ref. § 170.456):

(a) *Class 1:* Major arterial roads providing an integrated network with characteristics for serving traffic between large population centers, generally without stub connections and having average daily traffic volumes of 10,000 vehicles per day or more with more than two lanes of traffic.

(b) *Class 2:* Major or minor arterial roads providing an integrated network having the characteristics for serving traffic between large population centers, generally without stub connections. May also link smaller towns and communities to major resort areas which attract travel over long distances and generally provide for relatively high overall travel speeds with minimum interference to through traffic movement. Generally provide for at least inter-county or inter-State service and are spaced at intervals consistent with population density. This class of road will have less than 10,000 vehicles per day.

(c) *Class 3:* Streets-roads which are located within communities serving residential and other urban type settings.

(d) *Class 4:* Section line and/or stub type roads which collect traffic for arterial type roads, make connections within the grid of the IRR system. This class of road may serve areas around villages, into farming areas, to schools, tourist attractions, or various small enterprises. Also included are roads and motorized trails for administration of forest, grazing mining, oil, recreation, or other utilization purposes. This classification encompasses all those public roads not falling into either the Class 2 or 3 definitions above.

(e) *Class 5:* This classification encompasses all non-road type paths, trails, walkways, or other designated types of routes for public use by foot traffic, bicycles, trail bikes, or other uses to provide for general access of non-motorized traffic.

(f) *Class 6:* This classification encompasses other modes of transportation such as public parking facilities adjacent to IRR routes and scenic byways, rest areas, and other scenic pullouts, ferry boat terminals, and transit terminals.

(g) *Class 7:* This classification encompasses airstrips which are within the boundaries of the IRR system grid and are open to the

public. These airstrips are included for inventory and maintenance purposes only.

6. Grade and Drain costs include the cost for constructing a roadbed to an adequate standard and providing adequate drainage. Specifically it includes the necessary earthwork to build the roadbed to the required horizontal and vertical geometric parameters above the surrounding terrain and provide for proper drainage away from the foundation with adequate cross drains. Table 3 presents a summary of the proposed method of estimating grade and drain costs based on the existing roadbed condition observed in the inventory update. To implement this proposed procedure, a one-digit data field in the inventory database needs to be created for roadbed condition.

TABLE 3.—PERCENT GRADE AND DRAIN COST REQUIRED

Roadbed condition	Percent [1]
Proposed Road	100
Primitive Trail	100
Bladed Unimproved Earth Road, Poor Drainage, Poor Alignment	100
Minimum Built-up Roadbed (Shallow cuts and fills) with inadequate drainage and alignment that generally follows existing ground	100
A designed and constructed roadbed with some drainage and alignment improvements required	100
A roadbed constructed to the adequate standards with good horizontal and vertical alignment and proper drainage	0
A roadbed constructed to adequate standards with curb and gutter on one side	0
A roadbed constructed to adequate standards with curb and gutter on both sides	0

[1] Percent grade and drain cost required.

B. Aggregate Costs

The costs of providing the surface or subsurface defined by the adequate standard will vary depending on the type of surface required. (see Table 1)

TABLE 4.—PERCENT AGGREGATE COST REQUIRED

[Table 4 summarizes the percentage of aggregate costs for all possible scenarios of existing conditions and recommended surface conditions]

Existing surface type	Future surface type		
	Paved (percent)	Gravel (percent)	Earth (percent)
Adequate Standard Surface			
Proposed	100	100	0
Primitive	100	100	0
Earth	100	100	0
Gravel	100	100	0
Bituminous <2″	100	0	0
Bituminous >2″	0 or 100*	0	0
Concrete	0 or 100*	0	0

* If the condition of the surface requires reconstruction then use 100% of aggregate cost.

C. Pavement (Surface) Costs

Table 5 summarizes the percentage of pavement (surface) costs for existing conditions and recommended surface types. Pavement overlays are calculated at 100 percent of the pavement costs.

TABLE 5.—PERCENT OF SURFACE COST REQUIRED

Existing surface type	Future surface type		
	Paved (percent)	Gravel (percent)	Earth (percent)
Adequate Standard Surface			
Proposed	100	100	0
Primitive	100	100	0
Earth	100	100	0
Gravel	100	100	0
Bituminous <2″	100	0	0
Bituminous >2″	0 or 100*	0	0
Concrete	0 or 100*	0	0

* If the condition of the surface requires reconstruction then use 100% of surface cost.

D. Incidental Costs

1. The following incidental cost items are generally required if a project includes construction or reconstruction of the roadbed.

(a) Clearing and Grubbing.
(b) Construction Surveying.
(c) Construction Inspection.
(d) Materials Testing.
(e) Mobilization.
(f) Guard Rails.
(g) Miscellaneous Pipe.
(h) New Traffic Control Devices.
(i) Signage.
(j) Other Minor Incidentals.
(k) Concrete Barriers.
(l) Obstruction Removal.
(m) Pavement Removal.
(n) Temporary Traffic Control.
(o) Construction Inspection.
(p) Material Testing.
(q) Mobilization.
(r) New Traffic Control.
(s) Temporary Traffic Control.
(t) Fencing.
(u) Landscaping.

(v) Structural Concrete.
(w) Traffic Signals.
(y) Utilities.

2. Table 6 accounts for those incidental construction costs normally found on a typical project. If any of the other items are required as show in Table 7, the appropriate percentage should be added to the percentage in Table 6.

TABLE 6.—PERCENT INCIDENTAL CONSTRUCTION COST REQUIRED

Roadbed condition	New alignment (in percent)	Maintenance of traffic required (in percent)
Proposed Road	65	N/A
Primitive Trail	65	N/A
Bladed Unimproved Earth Road, Poor Drainage, Poor Alignment	65	N/A
Minimum Built-up Roadbed (shallow cuts and fills) with inadequate drainage and alignment that generally follows existing ground	N/A	75
A designed and constructed roadbed with some drainage and alignment improvements required	N/A	75
A roadbed constructed to the adequate standards with good horizontal and vertical alignment and proper drainage. Requiring surfacing	N/A	30
A roadbed constructed to adequate standards with curb and gutter on one side. Requiring surfacing	N/A	30
A roadbed constructed to adequate standards with curb and gutter on both sides. Requiring surfacing	N/A	30

TABLE 7.—PERCENT ADDITIONAL INCIDENTAL CONSTRUCTION COSTS

Fencing	1% of Total Incidental Construction Costs.
Landscaping	9% of Total Incidental Construction Costs.
Structural Concrete	9% of Total Incidental Construction Costs.
Traffic Signals	3% of Total Incidental Construction Costs.
Utilities	3% of Total Incidental Construction Costs.

Subpart D—Planning, Design, and Construction of Indian Reservation Roads Program Facilities

Transportation Planning

§ 170.400 What is the purpose of transportation planning?

Transportation planning develops a vision of the future which guides decision-making today. The transportation planning process results in a short- and long-range transportation plan. The purpose of transportation planning is to fulfill goals by developing strategies to meet transportation needs. These strategies address current and future land use, economic development, traffic demand, public safety, health, and social needs.

§ 170.401 What transportation planning functions and activities must BIA perform for the IRR Program?

The activities and functions that BIA must perform for the IRR Program are:

(a) Preparing the regional IRR TIP and IRR Inventory data updates as required;

(b) Coordinating with States and their political subdivisions, metropolitan planning offices (MPO's) and rural planning offices (RPO's) on IRR regionally significant projects;

(c) Providing technical assistance to tribal governments and developing IRR budgets including transportation planning cost estimates;

(d) Facilitating public involvement and participating in planning and other transportation-related meetings;

(e) Performing traffic studies, preliminary project planning, and special transportation studies;

(f) Developing short and long-range transportation plans;

(g) Mapping;

(h) Developing and maintaining management systems;

(i) Transportation planning for operational and maintenance facilities; and

(j) Researching of rights-of-way documents for project planning.

§ 170.402 What transportation planning functions and activities must tribes perform under a self-determination contract or self-governance agreement?

Tribes must prepare a tribal TIP (TTIP). Tribes may also perform other transportation planning activities such as:

(a) Coordinating with States and their political subdivisions, MPO's and RPO's on IRR regionally significant projects;

(b) Preparing IRR Inventory data updates;

(c) Obtaining public involvement;

(d) Performing traffic studies;

(e) Developing short- and long-range transportation plans;

(f) Mapping;

(g) Developing and maintaining tribal management systems;

(h) Participating in transportation planning and transportation-related land use planning and other transportation related meetings;

(i) Performing transportation planning for operational and maintenance facilities;

(j) Developing IRR budget, including transportation planning cost estimates;

(k) Performing special transportation studies, as appropriate;

(l) Researching rights-of-way documents for project planning; and

(m) Performing preliminary project planning.

170.403 Who performs transportation planning for the IRR Program?

BIA and tribal governments perform transportation planning for the IRRProgram.

§ 170.404 What IRR funds can be used for transportation planning?

Up to 2 percent of the IRR funds are reserved for transportation planning for tribal governments as provided for under section 204(j) of Title 23. A tribe may make a request to the BIA regional office to enter into a self-determination contract or self-governance agreement for transportation planning activities and functions under the ISDEAA, or it may request a travel authorization to attend transportation planning functions and related activities using these funds.

§ 170.405 How must tribes use planning funds?

IRR 2 percent transportation planning funds are only available for tribal governments. These funds support the development and implementation of the tribal transportation planning process and associated strategies for identifying their intermodal transportation needs. This can include attending

transportation planning meetings, pursuing other sources of funds, development of the tribal priority list or any of the transportation functions/activities as defined in the IRR Transportation Planning PolicyGuide (TPPG).

§ 170.406 Can IRR construction funds be used for transportation planning activities?

Yes, Tribes may identify transportation planning as a priority in their tribal priority list or TTIP. Tribes may use up to 100 percent of their IRR construction funds for transportation planning.

§ 170.407 Can IRR 2 percent planning funds be used for road construction and other projects?

Yes, any tribe can request to have its planning funds transferred into construction funds for use on any eligible and approved IRR project.

§ 170.408 What happens to 2 percent planning funds unobligated after August 15?

Once all tribal governments' requests for 2 percent funds have been satisfied for a given fiscal year the BIA regional office may roll the unobligated balances into construction funds after consultation with the affected tribal governments.

§ 170.409 What is pre-project planning?

Pre-project planning includes the activities conducted before project approval on the IRR TIP. Such activities include preliminary project cost estimates, certification of public involvement, cooperation with States and/or MPO's for a regionally significant project, preliminary needs assessments, and preliminary environmental and archeological reviews for the development of the project.

§ 170.410 How is the IRR Program transportation planning funded?

As provided in 23 U.S.C. 204, IRR Program funds are available for transportation planning.

The Transportation Improvement Program Process Chart follows:

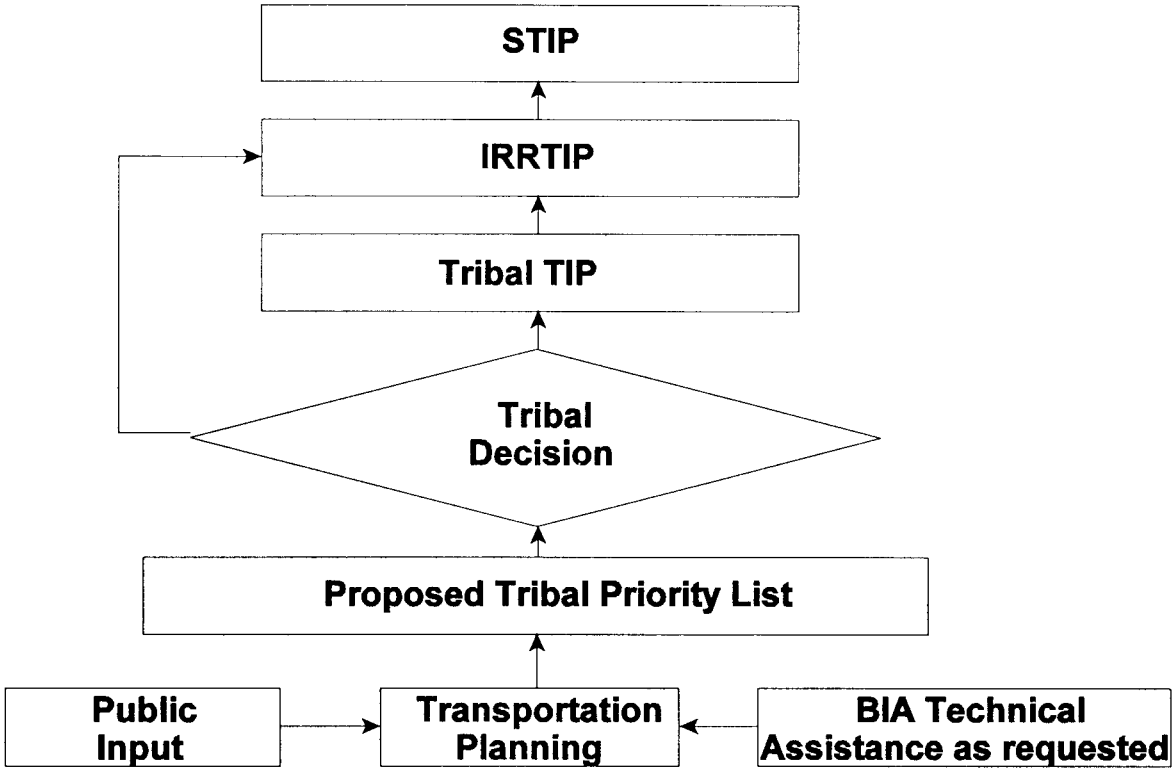

BILLING CODE 4310–LY–C

§ 170.411 What is the State Transportation Improvement Program (STIP)?

The State Transportation Improvement Program is a financially constrained, multi-year list of transportation projects. The STIP is developed under 23 U.S.C. 134 and 135, and 49 U.S.C. 5303–5305. The Secretary of Transportation (FTA and FHWA) reviews and approves these documents for each state. Approval of the STIP gives authority to expend Highway Trust Funds for those projects.

§ 170.412 What is the Indian Reservation Roads Transportation Improvement Program (IRR TIP)?

The IRR TIP is a multi-year, financially constrained list by year, State, and tribe of IRR-funded projects selected by tribal governments from tribal TIPs, or other tribal actions, that are programmed for construction in the next 3 to 5 years. Information from the tribal TIP concerning non-IRR funded projects may be attached to the IRR TIP for inclusion into the STIP.

§ 170.413 What is the Tribal Transportation Improvement Program (TTIP)?

The TTIP is a multi-year, financially constrained list of proposed transportation projects. It may be developed from the tribal priority list. The TTIP should be consistent with the tribal long-range transportation plan and must contain all Indian Reservation Roads (IRR) funded projects. It is reviewed and updated as necessary. The only entity that can change the TTIP is the Indian tribal government. The TTIP is forwarded to the BIA by resolution or

by tribally authorized government action for inclusion into the IRR TIP.

§ 170.414 Must the eligible projects on the tribal TIP be included in the IRR TIP?

Yes, eligible projects on the tribal TIP must be included in the IRR TIP.

§ 170.415 What happens to the tribal TIP after eligible projects are included in the IRR TIP?

The Secretary and the Secretary of Transportation review and approve the IRR TIP. The IRR TIP, as approved by the Secretaries, is then included in the STIP without further action. Approval of the IRR TIP authorizes expenditure of IRR highway construction funds for those projects.

§ 170.416 What are the responsibilities of the BIA prior to the IRR TIP being included in the STIP?

The BIA regional office must work cooperatively with tribal, state, rural, and metropolitan transportation planning organizations concerning the leveraging of funds from non-IRR sources and identification of other funding sources in order to expedite the planning, design and construction of projects on the IRR TIP.

§ 170.417 How are projects placed on the TTIP and IRR TIP?

Each project is placed on the TTIP and IRR TIP as follows:

(a) The TTIP may be developed from either the tribal priority list or the long-range transportation plan. The TTIP identifies the implementation year of each project scheduled to begin within the next 3–5 years. It is the tribal government's decision to select the year in which projects are programmed. The TTIP may also contain information regarding other Federal, state, county, municipal, and tribal transportation projects initiated by or developed in cooperation with the Indian tribal government. The only entity that can change the TTIP is the tribal government;

(b) The tribal government develops the tribal control schedule from the tribal priority list or TTIP. The tribal control schedule is an accounting and project management tool which contains detailed project and tasks information for all projects identified in the TTIP;

(c) Project information from the tribal control schedule is then included in the BIA's region-wide control schedule without change, unless the tribes control schedule exceeds the amount available to the tribe;

(d) Projects identified on the TTIP that are scheduled in the next 3–5 years must be included by the BIA in the IRR TIP, unless the TTIP is not financially constrained; and

(e) Tribes that do not generate sufficient annual funding under the IRR funding formula to complete a project may submit their tribal priority lists to the BIA. The BIA will develop the region-wide control schedule and IRR TIP after consulting with and taking into account the tribe's priorities. Alternatively, such tribes may either enter a consortium of tribes and delegate authority to the consortium to develop the TTIP and tribal control schedule or may enter into agreement with other tribes to permit completion of the project. In order to get a project on the TIP, tribes may seek flexible financing alternatives available as described in subpart C of this part.

§ 170.418 What is the tribal priority list?

The tribal priority list is a list of transportation projects which the tribe or tribal organization wants funded. The projects may or may not be identified in order of priority. This list is not financially constrained. Unless the tribal government submits a TTIP, the tribal priority list is provided to the BIA by official tribal action.

§ 170.419 What is the IRR TIP annual update?

The IRR TIP annual update is the process by which the IRR TIP is kept current. The BIA regional office annually updates the IRR TIP for each state in its service area to reflect changes in the TTIP.

§ 170.420 How is the IRR TIP updated?

The updating process begins when BIA provides the projected IRR Program funding amounts to each tribe, or an analysis of the existing tribal priority list or TTIP. New transportation planning information or substantial changes to an IRR tribal project may require an IRR TIP update. BIA reviews the programming of proposed projects with the tribes. Agreed upon adjustments are made to the IRR TIP following the IRR TIP process defined in this part on an annual basis or as otherwise needed.

§ 170.421 Should the IRR TIP be coordinated within the STIP time frames?

Yes, the time frame for the annual update of the IRR TIPS for each state in a BIA regional office's service area should be coordinated with the state transportation agencies. This will ensure that approved IRR TIP updates are included with the STIPs when they are printed and distributed.

§ 170.422 When may the Secretary amend the IRR TIP?

The Secretary may amend the IRR TIP:

(a) At the request of a tribe at any time, the Secretary amend the IRR TIP to add or delete projects or reflect significant changes in scope to a project in a process similar to an IRR TIP update; and

(b) Before reducing the funding for, or rescheduling a project on the IRR TIP, by consulting with the affected tribe and obtaining its consent whenever practicable. The Secretary may not reduce funding for or reschedule a project which is the subject of a negotiated agreement except under the terms of the agreement.

§ 170.423 How is the IRR TIP amended?

The IRR TIP is amended using the same process as updating the IRR TIP.

§ 170.424 Is public involvement required in the development of the IRR TIP?

Yes, public involvement is required in the development of the IRR TIP.

§ 170.425 How does public involvement occur in the development of the IRR TIP?

Public involvement may occur in many ways. For example:

(a) Public involvement entails one or more public meetings. The public is provided the opportunity to comment, either verbally or in writing;

(b) Public involvement activities may be conducted by the state transportation agency or MPO; and

(c) Public notice requires publishing a notice in the local and tribal newspapers when the draft tribal or IRR TIP is complete. The notice must indicate where a copy can be obtained, contact person for questions, where comments may be submitted, and the deadline for submitting comments.

§ 170.426 What happens after the IRR TIP is approved?

The IRR TIP is approved by the Secretary and the Secretary of Transportation and is returned to the BIA. Copies are provided to the BIA DOT, BIA regional offices, FHWA division office, and Indian tribal governments. The FHWA division office transmits the approved IRR TIP to the state transportation agency for inclusion in the STIP.

Within 10 working days of receipt of the approved IRR TIP and IRR funds, the BIA enters the projects into the Federal finance system. Expenditure of funds for development of the projects may then begin even though the state transportation agency may not have yet added the approved IRR TIP to the STIP.

§ 170.427 What is a long-range transportation plan?

An IRR long-range transportation plan is a document setting out a tribe's long-range transportation priorities and needs.

§ 170.428 What may a long-range transportation plan include?

The comprehensive long-range transportation plan may include:

(a) An evaluation of a full range of modal and connections between transportation modes such as highway, rail, air, and water to effectively and economically meet short- and long-term transportation needs;

(b) Trip generation studies including determination of traffic generators due to land use;

(c) Social and economic development planning to identify transportation improvements or needs to accommodate existing and proposed land use in a safe and economical fashion;

(d) Measures that address health and safety concerns;

(e) A review of the existing and proposed transportation system to identify the relationships between the transportation system and the environment;

(f) Cultural preservation planning to identify those issues of importance to the tribe and develop a plan within transportation planning which is sensitive to tribal cultural preservation;

(g) Scenic byways and tourism plans;

(h) Measures that address energy conservation considerations;

(i) A prioritized list of short-term transportation needs; and

(j) An analysis of funding alternatives to implement plan recommendations.

§ 170.429 What is the purpose of long-range transportation planning?

The purpose of long-range transportation planning is to fulfill tribal goals by developing strategies to meet identified transportation needs.

These strategies should address future land use, economic development, traffic demand, public safety, and health and social needs.

(a) The time horizon for long-range transportation planning should be 20 years to match state transportation planning horizons.

(b) Tribes should develop long-range transportation plans to demonstrate their transportation needs.

(c) A tribe may develop a transportation plan under the ISDEAA or, if a tribe chooses, BIA may develop it on the tribe's behalf.

§ 170.430 How does BIA or a tribe involve the public in developing the IRR long-range transportation plan?

BIA or the tribe must solicit public involvement. Tribes may do so in accordance with their own tribal laws and policies. If there are no tribal policies, tribes must use the procedures in this section. Public involvement begins at the same time long-range transportation planning begins and covers the range of users, from private citizens to major public and private entities. Public involvement may be handled in either of the following two ways:

(a) *Public Meetings:* BIA or the tribe must:

(1) Advertise each public meeting in local public newspapers at least 15 days before the meeting date;

(2) Provide at the meeting copies of the draft long-range transportation plan;

(3) Information is provided on funding and the planning process; and

(4) Provide the public the opportunity to comment, either orally or in writing.

(b) *Public Notice:* BIA or the tribe must:

(1) Publish a notice in the local and tribal newspapers when the draft long-range transportation plan is complete;

(2) State in the notice that the long-range transportation plan is available for review, where a copy can be obtained, whom to contact for questions, where comments may be submitted, and the deadline for submitting comments (normally 30 days).

§ 170.431 How is the IRR long-range plan developed and approved?

A. The IRR long-range plan is developed and approved in one of three ways:

(1) By a tribe working through a self-determination contract or self-governance agreement or other funding sources;

(2) By a qualified consultant who is a subcontractor for a tribe that has a self-determination contract or self-governance agreement; or

(3) By BIA upon request of, and in consultation with, a tribe. The tribe and BIA need to agree on the methodology and elements included in development of the IRR long-range transportation plan along with time frames before work begins.

B. During the development of the IRR long-range transportation plan, it is recommended that a midpoint review be conducted jointly by the tribe and BIA. The public reviews a draft IRR long-range transportation plan as part of the public involvement process consistent with § 170.430 of this part. The plan is further refined to address any issues identified during the public review process.

C. The IRR long-range transportation plan is approved by the tribe(s).

§ 170.432 How is the tribal long-range transportation plan used and updated?

The tribal government uses its IRR long-range transportation plan in its development of a tribal priority list or TTIP. To be consistent with State and MPO planning practices, the IRR long-range transportation plan should be reviewed annually by the tribe, or BIA for direct service tribes, and updated every 5 years, unless conditions dictate otherwise.

§ 170.433 When does BIA update the IRR TIP?

(a) The BIA regional office annually updates the IRR TIP for each State in its service area to reflect changes in the TTIP.

(b) BIA regional offices should coordinate the annual update with each affected state transportation agency. This will ensure that approved IRR TIP updates are included with the STIPs.

§ 170.434 When may the Secretary amend the IRR TIP?

(a) The Secretary may amend the IRR TIP:

(1) At any time if requested by the tribe, in order to add or delete projects or reflect significant changes in scope; and

(2) Before reducing the funding for, or rescheduling a project on the IRR TIP, by consulting with the affected tribe and obtaining its consent whenever practicable.

(b) The Secretary may not reduce funding for or reschedule a project which is the subject of a negotiated agreement except under the terms of the agreement. The IRR TIP is amended using the same public involvement process as updating the IRR TIP.

§ 170.435 How does BIA or a tribe solicit public participation during the development of the IRR TIP?

Public involvement is required in the development of the IRR TIP.

(a) BIA or the tribe may publish a notice in the local and tribal newspapers when the draft tribal or IRR TIP is complete. The notice must indicate where a copy can be obtained, who to contact for answers to questions, where comments may be submitted, and the deadline for submitting comments;

(b) BIA or the tribe may conduct one or more public meetings at which it solicits comments, either orally or in writing; or,

(c) BIA, the tribe, the State, or the metropolitan planning office may conduct other involvement activities.

§ 170.436 What happens after the IRR TIP is approved?

(a) After the Secretaries approve the IRR TIP they will return it to BIA.

(b) BIA will provide copies to BIADOT, BIA regional offices, FHWA division office, and Indian tribal governments.

(c) The FHWA division office transmits the approved IRR TIP to the State transportation agency for inclusion in the STIP.

(d) Within 10 working days of receipt of the approved IRR TIP and IRR funds, BIA enters the projects into the Federal finance system. Expenditure of funds for development of the projects may then begin even though the State transportation agency may not have yet added the approved IRR TIP to the STIP.

Public Hearings

§ 170.437 What are the purposes and objectives of public hearings for the IRR TIP, long range transportation plan, and IRR projects?

The purposes and objectives of these public hearings are to:

(a) Inform the public and obtain public input;

(b) Ensure that locations, designs or specifications are consistent with tribal objectives and with applicable Federal law; and

(c) Promote coordination and comprehensive planning of IRR activities.

§ 170.438 When is a public hearing for IRR TIP, long-range transportation plan or project held?

BIA or the tribe must hold a public hearing if a plan or project:

(a) Is a new route;

(b) Would significantly change the layout or function of connecting or related roads or streets;

(c) Would cause a substantial adverse effect on adjacent real property;

(d) Is controversial or expected to be controversial in nature; or

(e) Is for obtaining input during the TIP and long-range transportation planning processes.

§ 170.439 How are public hearings for IRR planning and projects funded?

Public hearings for IRR planning and projects are funded as follows:

(a) Public hearings for IRR planning:

(1) Public hearings for TIPS and long-range transportation plans conducted by tribes are funded using the 2 percent IRR transportation planning or IRR construction funds; and

(2) Public hearings for the IRR TIP and long-range transportation plans conducted by BIA are funded using IRR construction funds.

(b) Public hearings for IRR projects conducted by either tribes or BIA are funded using IRR construction funds.

§ 170.440 How does BIA or the tribe determine the need for a public hearing?

The tribe, or BIA, after consultation with the appropriate tribe and other involved agencies, determines whether or not a public hearing is needed for an IRR TIP, long-range transportation plan or project. The determination based on the criteria in § 170.434.

§ 170.441 How is the public informed when no public hearing is scheduled?

When no public hearing for an IRR project is scheduled, either the tribe or BIA must do the following:

(a) Give adequate notice to the public before project activities are scheduled to begin;

(b) Include in the notice the project name and location, the type of improvement planned, the date the activity is scheduled to start, and the name and address where more information is available, and provisions for requesting a hearing; and

(c) Send a copy of the notice to the affected tribe(s).

§ 170.442 How must BIA or a tribe inform the public when a hearing is held?

When BIA or a tribe holds a hearing under this part, it must notify the public of the hearing by publishing a notice.

(a) The public hearing notice is a document containing:

(1) Date, time, and place of the hearing;

(2) Planning activities or project location;

(3) Proposed work to be done, activities to be conducted, etc.;

(4) Where preliminary plans, designs or specifications may be reviewed; and

(5) How and where to get more information.

(b) BIA or the tribe must publish the notice:

(1) By posting and/or publishing the notice at least 30 days before the public hearing. A second notice for a hearing is optional; and,

(2) By sending it to the affected tribe(s).

§ 170.443 How is a public hearing conducted?

(a) *Who conducts the hearing.* A tribal or Federal official is appointed to preside at the public hearing. The official presiding over the hearing must maintain a free and open discussion of the issues.

(b) *Record of hearing.* The presiding official is responsible for compiling the official record of the hearing. A record of a hearing is a summary of oral testimony and all written statements submitted at the hearing. Additional written comments made or provided at the hearing, or within 5 working days of the hearing, will be made a part of the record.

(c) *Hearing process.* (1) The presiding official(s) explains the purpose of the hearing and provides an agenda;

(2) The presiding official(s) solicits public comments from the audience on the merits of IRR projects and activities; and

(3) The presiding official(s) will inform the hearing audience of the appropriate procedures for a proposed IRR project or activity, including but not limited to:

(i) Right(s)-of-way acquisition;

(ii) Relocation of utilities and relocation services;

(iii) Authorized payments allowed by the Uniform Relocation and Real Property Acquisition Policies Act, 42 U.S.C. 4601 *et seq.* as amended;

(iv) Draft transportation plan; and

(v) Explain the scope of the project and its impact on traffic during and after construction.

(d) *Availability of information.* Appropriate maps, plats, project plans and/or specifications will be available at the hearing for public review. Appropriate officials are present to answer questions.

(e) *Opportunity for comment.* Comments are received as follows:

(1) Oral statement at the hearing;

(2) Written statement submitted at the hearing;

(3) Written statement sent to the address noted in the hearing notice within 5 working days following the public hearing.

§ 170.444 How are the results of a public hearing obtained?

Results of a public hearing are available as follows:

(a) Within 20 working days of the completion of the public hearing, the presiding official(s) issues a hearing statement summarizing the results of the public hearing and the determination of further needed action.

(b) The presiding official(s) posts the hearing statement at the hearing site. The public may request a copy. The hearing statement outlines appeal procedures.

§ 170.445 Can a decision be appealed?

Yes, a decision from the public hearing may be appealed through the appropriate appeal processes as follows:

(a) *Federal decisions:* For BIA decisions, 25 CFR part 2 applies. For FHWA decisions, 23 CFR part 1420 applies.

(b) *Tribal decisions:* The appropriate tribal dispute resolution process applies.

IRR Inventory

§ 170.446 What is the IRR inventory?

The IRR inventory is a comprehensive list of information for all transportation facilities eligible for IRR funding by tribe or reservation, by BIA agency and region, Congressional district, State, and county. Other specific information collected and maintained under the IRR Program includes classification, route number, bridge number, current and future traffic volumes, maintenance responsibility, ownership, and other information as required in subpart C.

§ 170.447 How is the IRR inventory used?

BIA or tribes can use the IRR inventory data for a variety of purposes, such as assisting in the transportation planning process, justifying expenditures, identifying transportation needs, maintaining existing facilities, developing management systems, and project planning and design.

§ 170.448 How is the IRR inventory database amended?

Either BIA or a tribe may initiate the process for updating the IRR inventory. The Secretary must update the IRR inventory to include the transportation facility as long as it is an eligible IRR facility.

§ 170.449 How are transportation facilities added to or deleted from the IRR inventory?

A tribal government or its designated body can propose changes to the IRR inventory by submitting a tribal resolution or similar official authorization to the appropriate BIA regional office. That office approves the submission if it is accurate and the facility is eligible as an IRR facility.

§ 170.450 What facilities can be included in the IRR inventory?

The minimum requirements for including proposed transportation facilities in the IRR inventory are:

(a) A tribal resolution or other official tribal authorization must be obtained in support of the proposed transportation facility;

(b) Proposed facilities must address documented transportation needs of tribes as demonstrated by tribal transportation planning efforts, such as identification in the long-range transportation plan;

(c) The proposed facility must be eligible for IRR funding; and

(d) The proposed facility, when constructed, must be open to the public.

§ 170.451 How accurate must the IRR road inventory database be?

The information contained in the inventory database must be to the following accuracy:

(a) The roadway width must be within 1 foot (.3048 meters) of actual width; and

(b) The length of roadway must be within 100 feet (30.48 meters) of actual length.

§ 170.452 What are the standards for IRR atlas maps?

IRR atlas maps must:

(a) Be drawn to an appropriate scale;

(b) Show adequate topography, all IRR roads, contours as appropriate, title block, and legend;

(c) Show State, county, tribal, congressional, and private land boundaries as appropriate; and

(d) Be capable of displaying a variety of coordinate systems to minimize the number of (C-size paper) maps for a given reservation.

§ 170.453 What is a strip map?

For purposes of this subpart, a strip map is a graphical image that reflects a section of road or other transportation facility being added to or modified in the IRR inventory. It also defines its location with respect to the various state, county, tribal, and congressional boundaries. These maps further define overall dimensions of a section of road or facility and the accompanying inventory data.

§ 170.454 How are strip maps used?

Strip maps are used for the following purposes:

(a) Maintaining a visual inventory of each transportation facility in the IRR inventory;

(b) Transportation planning;

(c) Project planning; and

(d) IRR management systems.

§ 170.455 What standards must IRR inventory strip maps meet?

Strip maps must be consistent with the requirements of atlas maps except that a table is also displayed that provides specific inventory information about a section of an IRR route or other transportation facility on the strip map. This information is taken from the IRR inventory.

§ 170.456 What is functional classification?

For purposes of this subpart, functional classification means an analysis of a specific transportation facility taking into account current and future traffic generators, and their relationship to connecting or adjacent BIA, state, county, Federal, and/or local roads and other intermodal facilities. Functional classifications are used to delineate the difference between the various road and/or intermodal facilities standards eligible for funding under the IRR Program.

§ 170.457 What are the functional classifications of the IRR Program?

The functional classifications of the IRR Program are given in the following list:

(a) *Class 1:* Major arterial roads providing an integrated network with characteristics for serving traffic between large population centers, generally without stub connections and having average daily traffic volumes of 10,000 vehicles per day or more with more than two lanes of traffic.

(b) *Class 2:* Major or minor arterial roads providing an integrated network having the characteristics for serving traffic between large population centers, generally without stub connections. May also link smaller towns and communities to major resort areas which attract travel over long distances and generally provide for relatively high overall travel speeds with minimum interference to through traffic movement. Generally provide for at least inter-county or inter-State service and are spaced at intervals consistent with population density. This class of road will have less than 10,000 vehicles per day.

(c) *Class 3:* Streets-roads which are located within communities serving residential and other urban type settings.

(d) *Class 4:* Section line and/or stub type roads which collect traffic for arterial type roads, make connections within the grid of the IRR system. This class of road may serve areas around villages, into farming areas, to schools, tourist attractions, or various small enterprises. Also included are roads and motorized trails for administration of forest, grazing mining, oil, recreation, or other utilization purposes. This classification encompasses all those public roads not falling into either the Class 2 or 3 definitions above.

(e) *Class 5:* This classification encompasses all non-road type paths, trails, walkways, or other designated types of routes for public use by foot traffic, bicycles, trail bikes, or other uses to provide for general access of non-motorized traffic.

(f) *Class 6:* This classification encompasses other modes of transportation such as public parking facilities adjacent to IRR routes and scenic byways, rest areas, and other scenic pullouts, ferry boat terminals, and transit terminals.

(g) *Class 7:* This classification encompasses air strips which are within the boundaries of the IRR system grid and are open to the public. These air strips are included for inventory and maintenance purposes only.

§ 170.458 How are functional classifications used in the IRR Program?

Functional classifications are used to delineate the difference between the various road and/or intermodal facilities standards eligible for funding under the IRR Program.

§ 170.459 How is the surface type determined for an IRR road project?

The surface type of a road is based on input from the tribe and engineering judgment, taking into account projected traffic volumes, terrain, location, functional classification, and use of the road.

§ 170.460 What is a proposed IRR transportation facility?

A proposed IRR transportation facility is any transportation facility, including bridges, identified to serve public transportation needs that is eligible for construction or improvement under the IRR Program.

Environment and Archeology

§ 170.461 What are the archeological and environmental requirements for the IRR Program?

(a) The archeological and environmental requirements for tribes that enter into self-determination contracts or self-governance agreements for the IRR Program are in 25 CFR 900.125 and 1000.243.

(b) The archeological and environmental requirements with which BIA must comply on the IRR Program are contained in Appendix A to this subpart.

§ 170.462 Can IRR funds be used for required archeological and environmental compliance work?

Yes, for approved IRR projects, IRR funds can be used for environmental and archeological work consistent with 25 CFR 900.125(c)(6) and (c)(8) and 25 CFR 1000.243(b) and applicable tribal laws for:

(a) Road and/or bridge rights-of-way;

(b) Borrow pits and/or aggregate pits associated with IRR activities staging areas;

(c) Limited mitigation outside of the construction limits as necessary to address the direct impacts of the construction activity as determined in the environmental analysis and after consultation with the affected tribe(s) and the appropriate Secretary(s); and

(d) Construction easements.

Design

§ 170.464 What design standards are used in the IRR Program?

Appendix B to this subpart is a listing of design standards that BIA may use for the IRR program. Tribes may propose road and bridge design standards to be used in the IRR Program which are consistent with or exceed applicable Federal standards. The standards may be negotiated between BIA and the tribe and included in a self-determination contract or self-governance agreement.

§ 170.465 May BIA use FHWA-approved State or tribal design standards?

Yes, BIA may use FHWA-approved State or tribal design standards?

§ 170.466 How are these standards used in the design of IRR projects?

The standards in this section must be applied to each construction project consistent with a minimum 20 year design life. The design of IRR projects must take into consideration:

(a) The existing and planned future usage of the IRR facility in a manner that is conducive to safety, durability, and economy of maintenance;

(b) The particular needs of each locality, and the environmental, scenic, historic, aesthetic, community, and other cultural values and mobility needs in a cost-effective manner; and

(c) Access and accommodation for other modes of transportation.

§ 170.467 When can a tribe request an exception from the design standards?

A tribe can request an exception from the design standards in Appendix B of this subpart under the conditions in this section. FHWA reviews and may approve all design exceptions for IRR projects unless otherwise delegated under an IRR stewardship plan or agreement. To request an exception from the standards, the engineer of record must submit written documentation with appropriate supporting data, sketches, details, and justification based on engineering analysis.

(a) FHWA may, in accordance with applicable law, grant exceptions for:

(1) Experimental features on projects; and

(2) Projects where conditions warrant that exceptions be made.

(b) FHWA can approve a project design that does not conform to the minimum criteria only after due consideration is given to all project conditions, such as:

(1) Maximum service and safety benefits for the dollar invested;

(2) Compatibility with adjacent features; and

(3) The probable time before reconstruction of the project due to increased transportation demands or changed conditions.

§ 170.468 If BIA or FHWA denies a design exception, can that decision be appealed?

Yes, if BIA denies a design exception request made by a tribe, the decision may be appealed to FHWA. If FHWA denies a design exception, the decision may be appealed to the next higher level of review within the Department of Transportation.

§ 170.469 How long does BIA or FHWA have to approve or decline a design exception request by a tribe?

BIA or FHWA has 30 days from receipt of the request to approve or decline the exception.

Construction and Construction Monitoring and Rights-of-Way

§ 170.472 What road and bridge construction standards are used in the IRR Program?

Appendix B to this subpart lists design standards that may be used in the IRR Program. Tribes may propose road and bridge construction standards to be used in the IRR Program which are consistent with or exceed applicable federal standards as may be negotiated between BIA and the tribe and included in a self-determination contract or self-governance agreement.

§ 170.473 What standards must be used for intermodal projects?

For designing and building eligible intermodal projects funded by the IRR Program, tribes must use either:

(a) Nationally recognized standards for comparable projects; or

(b) Tribally adopted standards that meet or exceed nationally recognized standards for comparable projects.

§ 170.474 May BIA use FHWA-approved State or tribal road and bridge construction standards?

Yes, BIA may use FHWA-approved, State or tribal road and bridge construction standards.

§ 170.475 How will BIA monitor the IRR project during construction?

When a tribe or tribal organization carries out the IRR project under Pub. L. 93–638, BIA will monitor performance under the requirements of 25 CFR 900.130 and 900.131(b)(9) or 25 CFR 1000.243 and 1000.249(c) and (e), as appropriate. If the Secretary discovers a problem during an on-site monitoring visit, the Secretary must promptly notify the tribe and, upon request by the tribe, provide technical assistance.

§ 170.476 Is tribal consultation required in order to change a construction project?

Yes, substantial changes to the construction project must be processed in consultation with the affected tribe, where feasible.

§ 170.477 Who conducts inspections of IRR construction projects under a self-determination contract or self-governance agreement?

The Secretary or tribal government, as provided for under the contract or agreement, is responsible for the day-to-day project inspections except for monitoring by the Secretary as provided in § 170.475.

§ 170.478 What is quality control and who performs it?

Quality control is all activity conducted to ensure that all construction requirements are fulfilled. The tribe, other contractors, and/or BIA may perform quality control.

§ 170.479 What IRR construction records must tribes and BIA keep?

The following table shows which IRR construction records BIA and tribes must keep and the requirements for access.

Record keeper	Records that must be kept	Access
(a) Tribe or tribal organization.	All records required by the ISDEAA and 25 CFR 900.130–900.131 or 25 CFR 1000.243 and 1000.249, as appropriate.	BIA is allowed access to tribal IRR construction records as required under 25 CFR 900.130, 900.131 or 25 CFR 1000.243 and 1000.249, as appropriate.
(b) BIA	Completed daily reports of construction activities appropriate to the type of construction it is performing.	Upon reasonable advance request by a Tribe, BIA must provide reasonable access to records.

§ 170.480 Can a tribe review and approve Plans, Specification and Estimate (PS&E) packages for IRR projects?

Yes, a tribe can review and approve PS&E packages for IRR projects if the tribe meets the requirements of a state as defined in 23 U.S.C. 302(a) and enters into a tribal IRR Program stewardship agreement with the Secretary of Transportation or designee.

§ 170.481 Who must approve all PS&E packages?

All PS&E packages must be signed and/or sealed by the appropriate licensed professional engineer and by the appropriate official as follows:

(a) Absent an approved IRR Program stewardship agreement, FHWA approves all PS&E packages submitted by BIA;

(b) When an approved BIA regional IRR Program stewardship agreement exists, PS&E packages are approved by an official in the BIA regional office;

(c) When a tribe has assumed the responsibility to approve PS&E packages for tribal, state, and locally owned IRR facilities through a tribal IRR Program stewardship agreement, the tribe approves PS&E packages with the consent of the facility owner after a health and safety review by the Secretary;

(d) When a tribe has not assumed the responsibility to approve PS&E packages under paragraph (c) of this section, BIA or FHWA approves PS&E packages under paragraph (a) or (b) of this section, as applicable.

§ 170.482 How can the plans, specifications, and estimates of an IRR project be changed during construction?

Only the licensed engineer may change an IRR project's plans, specifications, and estimates (PS&E) during construction.

(a) For substantial changes the original approving agency must review the change. The approving agency is the Federal, tribal, State, or local entity with PS&E approval authority over the project.

(b) In making any substantial change, the approving agency must consult with the affected tribe and the entity having maintenance responsibility over the facility.

(c) No change may be made that exceeds the limits of available funding without the consent of the funding agency.

§ 170.483 What is the final inspection procedure for an IRR construction project?

At the conclusion of a construction project, the agency or organization responsible for the project must make a final inspection. The purpose of the inspection is to determine that the project has been completed in reasonable conformity with the PS&E.

(a) Appropriate officials from the tribe, BIA, and FHWA are encouraged to participate in the inspection.

(b) BIA, FHWA, contractors, and maintenance personnel should also participate in the inspection.

§ 170.484 How is construction project closeout conducted?

An IRR construction project closeout is the final accounting of all IRR construction project expenditures. It is the closing of the financial books of the Federal Government for that construction project and is conducted after the final inspection. The following table contains the requirements for preparing the report.

If the project was completed by . . .	Then . . .	And the closeout report must . . .
(a) BIA	The regional engineer or designee is responsible for closing out the project and preparing the report.	(1) Summarize the construction project records to ensure compliance requirements have been met; and (2) Review the bid item quantities and expenditures to ensure reasonable conformance with the PS&E and modifications.
(b) A tribe	Agreements negotiated under Pub. L. 93–638 specify who is responsible for closeout and preparing the report.	(1) Meet the requirements of Pub. L. 93–638; and (2) Comply with 25 CFR 900.130(d) and 131(b)(10) and 25 CFR 1000.249, as applicable.

§ 170.485 Who has final acceptance of the IRR project audit?

The Secretary has final acceptance and approval of the project including the IRR project audit.

§ 170.486 When does a project closeout occur?

A project closeout occurs after the final project inspection is concluded and the IRR project is accepted by the facility owner and the Secretary.

§ 170.487 Who must conduct the project closeout and develop the report?

(a) The self-determination contract or self-governance agreement must specify who is responsible for project closeout and development of a final report.

(b) The Secretary is responsible for closing out the project and preparing the report when the project is conducted by the Secretary.

§ 170.488 What information must be made available for the project closeout?

(a) When the Secretary conducts the project, all project information must be made accessible for the IRR construction project closeout. Such information may include, but is not limited to: Daily diaries, weekly progress reports, subcontracts, subcontract expenditures, salaries, equipment expenditures, etc.

(b) When a tribe conducts the project under a self-determination contract or self-governance agreement, all project information must be made accessible for the IRR construction project closeout. Such information may include but is not limited to: Daily diaries, weekly progress reports, subcontracts, subcontract expenditures, salaries, equipment expenditures, etc.

§ 170.489 Who is provided a copy of the IRR construction project closeout report?

(a) When the Secretary conducts the project, copies of the IRR construction project closeout reports are provided to the affected tribes and the Secretary of Transportation.

(b) When a tribe conducts the project under a self-determination contract or self-governance agreement, the contract or agreement must specify who will be provided a copy of the closeout report.

§ 170.490 Will projects negotiated under Public Law 93–638 specify who will be provided a copy of the closeout report?

Yes, projects negotiated under Public Law 93–638 must specify who will be provided a copy of the closeout report.

§ 170.491 Who prepares the IRR construction project closeout report?

The IRR construction project closeout report is prepared by whomever administers the project or FHWA or BIA within 120 calendar days of project completion.

§ 170.500 What provisions apply to acquiring IRR Program rights-of-way over trust or restricted lands?

Rights-of-way across trust or restricted lands are covered by 25 CFR part 169 except where Federal statutory authority exists for tribes to grant rights-of-way across their reservations without approval by the Secretary.

§ 170.501 What must a right-of-way easement document contain at a minimum?

(a) For rights-of-way across Indian trust and restricted lands, those documents required by 25 CFR part 169 must be submitted; and

(b) For lands other than trust or restricted, the following information must be submitted:

(1) Identification of the grantor and grantee;

(2) A legal description of the property acquired for the right-of-way;

(3) A right-of-way plat/map of definite location;

(4) A statement of the term of the right-of-way, whether for a specific term of years, whether it includes a right of renewal, or whether the grant is in perpetuity;

(5) Terms and conditions on the grant of the right-of-way, including but not limited to, other permissible uses of the right-of-way, or specific restrictions on the rights-of-way easements;

(6) Identification of whether the rights-of-way includes the right to construct, and/or re-construct the facility; and

(7) A statement on whether the right-of-way may be transferred or assigned and the terms and conditions under which a transfer or assignment may occur.

(c) If a rights-of-way document covers maintenance it may include an identification of maintenance responsibilities assumed by the grantee or retained by the grantor and whether such rights convey with any transfer of the rights-of-way.

§ 170.502 How are rights-of-way granted on Indian trust or restricted fee lands?

Grants of right-of-way must be made under the provisions of 25 CFR part 169.

Program Reviews and Management Systems

§ 170.510 What are BIA IRR Program reviews?

On an annual basis, BIADOT and FHWA initiate and conduct informal program reviews to examine program procedures and identify improvements. These reviews evaluate the procedures being used by BIA and FHWA to administer, implement, and monitor the IRR Program. These program reviews may be held in conjunction with either a national BIA transportation meeting or an IRR Program Coordinating Committee meeting. BIA must provide notice to tribes of these informal program reviews. Tribes may send representatives to these meetings at their own expense.

§ 170.511 What is an IRR process review of a BIA regional office?

(a) The IRR process review of a BIA regional office is a review involving FHWA, BIA, and affected Tribe(s) in the region, of a BIA regional office's processes and controls in the following areas:

(1) Transportation;

(2) Planning;

(3) Design;

(4) Contract administration;

(5) Construction;

(6) Financial management; and

(7) Systems maintenance and existing stewardship agreements.

(b) The review may result in recommendations to improve transportation planning, design, contract administration, construction, financial management, and systems management activities performed by a BIA regional office.

§ 170.512 What happens with the information gathered from the IRR process review?

After the IRR process review, the review team must:

(a) Conduct an exit interview during which it makes a brief oral report of findings and recommendations to BIA regional director and IRR regional staff.

(b) Prepare a written report of its findings and recommendations which it combines the gathered information into a short written report. The final report is provided to the reviewed office, BIA, all participants, affected tribal governments and/or organizations.

§ 170.513 What happens when the review process identifies areas for improvement?

When the review process identifies areas for improvement:

(a) The regional office must develop a corrective action plan;

(b) BIADOT and FHWA review and approve the plan;

(c) FHWA may provide technical assistance during the development and implementation of the plan; and

(d) The reviewed BIA regional office provides either annual or biannual corrective action implementation reports to BIADOT and FHWA and implementation of the plan. The reviewed BIA regional office provides

either annual or biannual corrective action implementation reports to BIA DOT and FHWA.

§ 170.514 Are management systems required for the IRR Program?

(a) To the extent appropriate, the Secretaries must, in consultation with tribes, develop and maintain the following management systems for the IRR Program:

(1) Pavement management;

(2) Safety management;

(3) Bridge management; and

(4) Congestion management.

(b) Other management systems may include the following:

(1) Public transportation facilities;

(2) Public transportation equipment; and/or

(3) Intermodal transportation facilities and systems.

(c) All management systems for the IRR Program must be consistent with applicable Federal regulations to be developed by the Secretaries in consultation with tribes.

(d) A tribe may enter into an ISDEAA contract or agreement to develop, implement, and maintain alternative tribal management systems, provided that such systems are consistent with Federal management systems.

§ 170.515 How are IRR Program management systems funded?

BIA funds IRR Program management systems to develop the nationwide IRR Program management systems. If a tribe elects not to use the nationwide system, it may develop a tribal management system using the 2 percent IRR tribal transportation planning or IRR construction funds.

§ 170.516 How will the IRR management systems be implemented?

BIA Division of Transportation (BIA DOT) implements and maintains nationwide IRR management systems using IRR Program management funds. For direct service tribes that chose not to contract, BIA regional offices will provide the database information for these nationwide systems using IRR construction funds. A tribe may collect and must provide this information to the BIA regional office using IRR construction funds or 2 percent IRR tribal transportation planning funds under a self-determination contract or self-governance annual funding agreement.

Appendix A to Subpart D

Archeological and Environmental Requirements for the IRR Program

All BIA work for the IRR Program must comply with the following archeological and environmental requirements:

1. 16 U.S.C. 1531 Endangered Species Act.
2. 16 U.S.C. 460L Land and Water Conservation Fund Act (Section 6(f) .
3. 16 U.S.C. 661–667d Fish and Wildlife Coordination Act.
4. 23 U.S.C. 138 Preservation of Parklands.
5. 25 U.S.C. 3001–3013 Native American Graves Protection and Repatriation Act.
6. 33 U.S.C. 1251 Federal Water Pollution Control Act and Clean Water Act.
7. 42 U.S.C. 7401 Clean Air Act.
8. 42 U.S.C. 4321 National Environmental Policy Act.
9. 49 U.S.C. 303 Preservation of Parklands.
10. 7 U.S.C. 4201 Farmland Protection Policy Act.
11. 7 CFR 355 Endangered Species Act regulations.
12. 7 CFR 658 Farmland Protection Policy Act regulations.
13. 23 CFR 770 Air Quality Conformity and Priority Procedures for use in Federal-aid Highway and Federally-Funded Transit Programs.
14. 23 CFR 771 Environmental Impact and Related Procedures.
15. 23 CFR 772 Procedures for Abatement of Highway Traffic Noises and Construction Noises.
16. 23 CFR 777 Mitigation of Environmental Impacts To Privately Owned Wetlands.
17. 36 CFR 800 Historic Preservation.
18. 40 CFR 260–271 Resource Conservation and Recovery Act.
19. 40 CFR 300 Comprehensive Environmental Response, Compensation, and Liability Act.
20. Applicable tribal/State laws.
21. Other applicable Federal laws.

Appendix B to Subpart D

Design Standards for the IRR Program

Depending on the nature of the project, tribes may use the following design standards. Additional standards may also apply. To the extent that any provisions of these standards are inconsistent with the ISDEAA, these provisions do not apply.

1. AASHTO Policy on Geometric Design of Highways and Streets.
2. FHWA Federal Lands Highway, Project Development and Design Manual.
3. Standard Specifications for Construction of Roads and Bridges on Federal Highway Projects, latest edition.
4. 23 CFR 645 Utilities.
5. 23 CFR 646 Railroads.
6. MUTCD Manual of Uniform Traffic Safety Devices, latest edition.
7. AASHTO A Guide for Transportation Landscape and Environmental Design.
8. AASHTO Roadside Design Guide, latest edition.
9. AASHTO Guide for Selecting, Locating and Designing Traffic Barriers, latest edition.
10. AASHTO Standard Specifications for Highway Bridges, latest edition.
11. FHWA Flexibility in Highway Design.
12. FHWA Roadside Improvements for Local Road and Streets.
14. FHWA Improving Guardrail Installations and Local Roads and Streets.
15. 23 U.S.C. 106 PS&E.
16. 23 U.S.C. 109 Standards.
17. 23 CFR 625 Design Standards for Highways.
18. 23 CFR 630 Preconstruction Procedures.
19. 23 CFR 633 Required Contract Provisions.
20. 23 CFR 635 Construction and Maintenance.
21. DOT Metric Conversion Plan, October 31, 1991.

Subpart E—Service Delivery for Indian Reservation Roads

§ 170.600 What IRR Program functions may be assumed by a tribe in a self-determination contract or self-governance agreement?

All IRR functions and activities that are otherwise contractible may be included in a self-determination contract or self-governance agreement. (23 U.S.C. 202(d)(3)(B)).

§ 170.601 What IRR project and program functions are not otherwise contractible?

The following IRR functions or activities are non-contractible:

(a) IRR project-related pre-contracting activities:

(1) Notifying tribes of available funding including the right of first refusal; and

(2) Providing technical assistance.

(b) IRR project-related contracting activities:

(1) Providing technical assistance;

(2) Reviewing all scopes of work (25 CFR 900.122);

(3) Evaluating proposals and making declination decisions, if warranted;

(4) Performing declination activities;

(5) Negotiating and entering into contracts or agreements with state, tribal, and local governments and other Federal agencies;

(6) Processing progress payments or contract payments;

(7) Approving contract modifications;

(8) Processing claims and disputes with tribal governments; and

(9) Closing out contracts or agreements.

(c) Planning activities:

(1) Reviewing IRR transportation improvement programs developed by tribes or other contractors;

(2) Reviewing IRR long-range transportation plans developed by tribes or other contractors; and

(3) Performing other Federal responsibilities identified in the IRR Transportation Planning Procedures and Guidelines manual.

(d) Environmental and historical preservation activities:

(1) Reviewing and approving all items required for environmental compliance; and

(2) Reviewing and approving all items required for archaeological compliance.

(e) Processing rights-of-way:
(1) Reviewing rights-of-way applications and certifications;
(2) Approving rights-of-way documents;
(3) Processing grants and acquisition of rights-of-way requests for tribal trust and allotted lands under 25 CFR part 169;
(4) Responding to information requests;
(5) Filing Affidavit of Completion Forms; and
(6) Performing custodial functions related to storing right-of-way documents.
(f) Conducting project development and design under 25 U.S.C. 900.131:
(1) Participating in the plan-in-hand reviews as facility owner;
(2) Reviewing and/or approving plans, specifications, and cost estimates (PS&E's) for health and safety assurance as facility owner;
(3) Reviewing PS&E's to assure compliance with all other Federal laws; and
(4) Reviewing PS&E's to assure compliance with or exceeding Federal standards for IRR design and construction.
(g) Construction:
(1) Making application for clean air/clean water permits as facility owner;
(2) Ensuring that all required state/tribal/Federal permits are obtained;
(3) Performing quality assurance activities;
(4) Conducting value engineering activities as facility owner;
(5) Negotiating with contractors on behalf of Federal Government;
(6) Approving contract modifications/change orders;
(7) Conducting periodic site visits;
(8) Performing all Federal Government required project-related activities contained in the contract documents and required by 25 CFR parts 900 and 1000;
(9) Conducting activities to assure compliance with safety plans as a jurisdictional responsibility (hazardous materials, traffic control, OSHA, etc.);
(10) Participating in final inspection and acceptance of project documents (as-built drawings) as facility owner; and
(11) Reviewing project closeout activities and reports.
(h) Other activities:
(1) Performing other non-contractible required IRR project activities contained in 25 CFR part 900 and part 1000; and
(2) Other Title 23 United States Code non-project-related management activities.
(i) BIA Division of Transportation program management:
(1) Developing budget on needs for the IRR Program;
(2) Developing legislative proposals;
(3) Coordinating legislative activities;
(4) Developing and issuing regulations;
(5) Developing and issuing IRR planning, design, and construction standards;
(6) Developing/revising interagency agreements;
(7) Developing and approving IRR stewardship agreements in conjunction with FHWA;
(8) Developing annual IRR obligation and IRR Program accomplishments reports;
(9) Developing reports on IRR project expenditures and performance measures for the Government Performance and Results Act (GPRA);
(10) Responding to/maintaining data for congressional inquiries;
(11) Developing and maintaining funding formula and its database;
(12) Allocating IRR Program and other transportation funding;
(13) Providing technical assistance to tribe/tribal organizations/agencies/regions;
(14) Providing national program leadership for: National Scenic Byways Program, Public Lands Highways Discretionary Program, Transportation Enhancement Program, Tribal Technical Assistance Program, Recreational Travel and Tourism, Transit Program, ERFO Program, Presidential initiatives (Millennium Trails, Lewis & Clark, Western Tourism Policy Group);
(15) Participating in and supporting tribal transportation association meetings such as the Intertribal Transportation Association regional and national meetings;
(16) Coordinating with and monitor Tribal Technical Assistance Program centers;
(17) Planning, coordinating, and conducting BIA/tribal training;
(18) Developing information management systems to support consistency in data format, use, etc., with the Secretary of Transportation for the IRR Program;
(19) Participating in special transportation related workgroups, special projects, task forces and meetings as requested by tribes;
(20) Participating in national transportation organizations, such as the Western Association of State Highway and Transportation Officials, American Association of State Highway and Transportation Officials, National Association of County Engineers, and Transportation Research Board;
(21) Participating in and supporting FHWA Coordinated Technology Improvement program;
(22) Participating in national and regional IRR Program meetings;
(23) Consulting with tribes on non-project related IRR Program issues;
(24) Participating in IRR Program, process, and product reviews;
(25) Developing and approve national indefinite quantity service contracts;
(26) Assisting and supporting the IRR Coordinating Committee;
(27) Processing IRR Bridge program projects and other discretionary funding applications or proposals from tribes;
(28) Coordinating with FHWA;
(29) Performing stewardship of the IRR Program;
(30) Performing oversight of the IRR Program and its funded activities; and
(31) Performing any other non-contractible IRR Program activity included in this part.
(j) BIA DOT Planning:
(1) Maintaining the official IRR inventory;
(2) Reviewing long-range transportation plans;
(3) Reviewing and approving IRR transportation improvement programs;
(4) Maintaining nationwide inventory of IRR strip and atlas maps;
(5) Coordinating with tribal/state/regional/local governments;
(6) Developing and issuing procedures for management systems;
(7) Distributing approved IRR transportation improvement programs to BIA regions;
(8) Coordinating with other Federal agencies as applicable;
(9) Coordinating and processing the funding and repair of damaged Indian reservation roads with FHWA;
(10) Calculating and distributing IRR transportation planning and Atlas mapping funds to BIA regions;
(11) Reprogramming unused IRR transportation planning and Atlas mapping funds at the end of the fiscal year;
(12) Monitoring the nationwide obligation of IRR transportation planning and Atlas mapping funds;
(13) Providing technical assistance and training to BIA regions and tribes;
(14) Approving Atlas maps;
(15) Reviewing IRR inventory information for quality assurance; and
(16) Advising BIA regions and tribes of transportation funding opportunities.
(k) BIA DOT engineering:
(1) Participating in the development of design/construction standards with FHWA;
(2) Developing and approving design/construction/maintenance standards;
(3) Conducting IRR Program/product reviews; and
(4) Developing and issuing criteria for pavement and congestion management systems.

(l) BIA DOT responsibilities for bridges:

(1) Maintaining BIA National Bridge Inventory information/database;

(2) Conducting quality assurance of the bridge inspection program;

(3) Reviewing and processing IRR Bridge program applications;

(4) Participating in second level review of IRR bridge PS&E; and

(5) Developing criteria for bridge management systems.

(m) BIA DOT responsibilities to perform other non-contractible required IRR Program activities contained in this part;

(n) BIA regional offices program management:

(1) Designating IRR system roads;

(2) Notifying tribes of available funding;

(3) Developing state IRR transportation improvement programs;

(4) Providing FHWA-approved IRR transportation improvement programs to tribes;

(5) Providing technical assistance to tribes/tribal organizations/agencies;

(6) Funding common services as provided as part of the region/agency/ BIA Division of Transportation IRR costs;

(7) Processing and investigating non-project related tort claims;

(8) Preparing budgets for BIA regional and agency IRR Program activities;

(9) Developing/revising interagency agreements;

(10) Developing control schedules/ Transportation Improvement Programs;

(11) Developing regional IRR stewardship agreements;

(12) Developing quarterly/annual IRR obligation and program accomplishments reports;

(13) Developing reports on IRR project expenditures and performance measures for Government Performance and Results Act (GPRA);

(14) Responding to/maintaining data for congressional inquiries;

(15) Participating in Indian transportation association meetings such as Intertribal Transportation Association regional and national meetings;

(16) Participating in Indian Local Technical Assistance Program (LTAP) meetings and workshops;

(17) Participating in BIA/tribal training development (highway safety, work zone safety, etc.);

(18) Participating in special workgroups, task forces, and meetings as requested by tribes (tribal members and BIA region/agency personnel);

(19) Participating in national transportation organizations meetings and workshops;

(20) Reviewing Coordinated Technology Improvement program project proposals;

(21) Consulting with tribal governments on non-project related program issues;

(22) Funding costs for common services as provided as part of BIA IRR region/agency/contracting support costs;

(23) Reviewing and approving IRR Atlas maps;

(24) Processing Freedom of Information Act (FOIA) requests;

(25) Monitoring the obligation and expenditure of all IRR Program funds allocated to BIA region;

(26) Performing activities related the application for ERFO funds, administration, and oversight of such funds; and

(27) Participating in IRR Program, process, and product reviews.

(o) BIA DOT regional offices planning:

(1) Coordinating with tribal/state/ regional/local government;

(2) Coordinating and processing the funding and repair of damaged Indian reservation roads with tribes;

(3) Reviewing and approving IRR Inventory data;

(4) Maintaining, reviewing, and approving the management systems databases;

(5) Reviewing and approving IRR state transportation improvement programs; and

(6) Performing Federal responsibilities identified in the IRR Transportation Planning Procedures and Guidelines manual.

(p) BIA DOT regional offices engineering:

(1) Approving tribal standards for the IRR Program use;

(2) Developing and implementing new engineering techniques in the IRR Program; and

(3) Providing technical assistance.

(q) BIA DOT regional offices responsibilities for bridges:

(1) Reviewing and processing IRR bridge program applications;

(2) Reviewing and processing IRR bridge inspection reports and information; and

(3) Ensuring the safe use of roads and bridges.

(r) BIA DOT regional offices other responsibilities for performing other non-contractible required IRR Program activities contained in this part.

§ 170.602 How are the IRR non-contractible program and project functions funded?

(a) All non-contractible program functions are funded by IRR Program management and oversight funds; and

(b) All non-contractible project functions are funded by the IRR project construction funds.

§ 170.603 May tribes include the cost for contractible supportive administrative functions in their budgets?

Yes, Tribes may use IRR project funds contained in their contracts or annual funding agreements for contractible supportive administrative functions.

§ 170.604 How does BIA determine the amount of funds needed for non-contractible non-project related functions?

Each fiscal year the Secretary will develop a national and regional BIA IRR Program budgets. Within the first quarter of each fiscal year the Secretary will send a copy of the national IRR budget and BIA regional IRR budget to all tribes.

§ 170.605 Are the unused IRR Program management funds reserved by the Secretary considered residual funds?

No, the unused IRR Program management funds reserved by the Secretary are not considered residual funds.

170.606 What happens to the unused portion of IRR Program management funds reserved by the Secretary?

Any unused IRR Program management funds are distributed to BIA regions using the IRR Relative Need Formula and are used for additional construction activities.

§ 170.608 May IRR Programs be contracted under the ISDEAA?

Yes, IRR Programs may be contracted under the regulations set out in 25 CFR part 900. In the event of an actual conflict between these IRR regulations and part 900, subpart J of the regulations, these IRR regulations control.

§ 170.609 What are consortium contracts/ agreements?

Under title I and title IV of the ISDEAA, multiple tribes and/or multi-tribal organizations are eligible to assume IRR Programs under consortium contracts or agreements. For an explanation of self-determination contracts, refer to Title I, 25 U.S.C. 450f. For an explanation of self-governance agreements, refer to Title IV, 25 U.S.C. 450b(l) and 458bb(b)(2).

§ 170.610 What must BIA include in the notice of availability of funds?

The notice of availability of funds that BIA publishes in the **Federal Register** must include the following:

(a) The total amount of IRR Program funds allocated to the region for IRR transportation planning, design, and construction projects;

(b) A breakdown of IRR Program funds by tribe based on the distribution formula in subpart C;

(c) Copies of the FHWA-approved IRR TIPs for each state in the BIA region;

(d) Information on IRR Program funding by tribe for prior years. This information will identify over-funded or advance-funded tribes;

(e) An offer of technical assistance in the preparation of contract proposal(s);

(f) A request of a 30-day response from the tribe;

(g) A proposed project listing used to develop the region's control schedule; and

(h) The various options available to the tribe for IRR construction projects, i.e., direct service, self-determination contract, and self-governance agreement.

§ 170.611 Can the Secretary transfer funds to tribal governments before issuing a notice of funding availability?

Yes, the Secretary can transfer funds to tribal governments with negotiated self-determination contracts and self-governance agreements before issuing a notice of funding availability. The Secretary's ability to transfer funding is independent of and cannot be delayed by the requirement to provide tribes with a written notice of availability of funds.

§ 170.612 Can a tribe enter into a self-determination contract or self-governance agreement that exceeds one year?

Yes, the Secretary can enter into a multi-year IRR self-determination contract and self-governance agreement with a tribe under sections 105(c)(1)(A) and (2) of the ISDEAA. The amount of such contracts or agreements is subject to the availability of appropriations.

§ 170.613 May a tribe receive advance payments of IRR funds for non-construction activities?

Yes, BIA must advance payments to a tribe for non-construction activities under 25 U.S.C. 450*l* for self-determination contracts on a quarterly, semiannual, lump-sum, or other basis proposed by a tribe and authorized by law.

§ 170.614 May the Secretary advance payments of IRR funds to a tribe under a self-determination contract for construction activities?

Yes, the Secretary and the tribe must negotiate a schedule of advance payments as part of the term of a self-determination contract in accordance with 25 CFR 900.132.

§ 170.615 What is a design/construct IRR self-determination contract?

It is a self-determination contract which includes both the design and construction of one or more IRR projects.

§ 170.616 May the Secretary advance payments of IRR funds to a tribe under a self-determination design/construct contract for construction activities?

Yes, when making at least quarterly advance payments for construction and construction engineering, the Secretary includes IRR Program funds based on progress, need, and the payment schedule negotiated under 25 CFR 900.132.

§ 170.617 May the Secretary advance payments of IRR funds to a tribe or consortia under a self-governance agreement?

Yes, advance payments must be made to the tribes/consortia in the form of annual or semiannual installments as indicated in the agreement.

§ 170.618 How are advance payments made when additional IRR funds are made available after execution of the self-governance agreement?

When additional IRR funds are available, following the procedures set forth in 25 CFR 1000.104, tribes can request to use the additional funds for approved IRR activities or projects contained in a subsequent year of FHWA-approved IRR TIP, and immediately have those funds added to the agreement.

§ 170.619 May a self-determination or self-governance tribe include a contingency in its proposal budget?

Yes, a tribe with a self-determination contract may include a contingency amount in its proposal budget in accordance with 25 CFR 900.127(e)(8). A tribe with a self-governance agreement may include a project-specific line item for contingencies if the tribe does not include its full IRR allocation in the agreement.

§ 170.620 Can Indian tribes and tribal organizations performing under self-determination contracts of self-governance agreements keep savings that result from their administration of IRR projects or an entire tribal IRR Program?

Pursuant to 25 U.S.C. 450e–2, where the actual costs of the contracts or agreements for construction projects are less than the estimated costs, use of the resulting excess funds shall be determined by the Secretary after consultation with the tribes.

§ 170.621 How do the ISDEAA's Indian preference provisions apply?

This section applies when the Secretary or a tribe enters into a cooperative agreement with a State or local government for an IRR construction project. The tribe and the parties may choose to incorporate the provisions of section 7(b) in a cooperative agreement.

§ 170.622 Do tribal preference and Indian preference apply to IRR funding?

This section applies to any contract entered into under Title I of the ISDEAA.

(a) If the contract serves a single tribe, section 7(c) of the ISDEAA applies to allow the tribal employment or contract preference laws adopted by the tribe to govern. This includes tribal adoption of local preference laws.

(b) If the contract does not serve a single tribe, section 7(b) of the ISDEAA applies.

(c) Where a self-governance agreement exists under Title IV of the ISDEAA, 25 CFR 1000.406 governs Indian preference issues.

§ 170.623 What protections does the government have if a tribe fails to perform?

If a tribe substantially fails to perform a contract or agreement:

(a) For self-determination contracts, the Secretary must use the monitoring and enforcement procedures in 25 CFR 900.131(a)–(b) and part 900, subpart L (appeals); and

(b) For self-governance agreements, the Secretary must use the monitoring and enforcement procedures in 25 CFR 1000, subpart K.

§ 170.624 What activities may the Secretary review and monitor?

The Secretary reviews and monitors the performance of construction activities under 25 CFR 900.131.

§ 170.625 If a tribe incurs unforeseen construction costs, can it get additional funds?

Yes, to the extent feasible, the Secretary must pay for all costs (i.e., cost overruns) incurred resulting from unforeseen circumstances of the construction process. See 25 CFR 900.130(e). If the Secretary is unable to fund the unforeseen costs, the tribe can suspend or terminate work on the project and may return the project to the Secretary.

§ 170.626 When may BIA use force account methods in the IRR Program?

BIA may use force account methods in the IRR Program unless the tribe elects otherwise to enter into a self-determination contract or a self-governance agreement for IRR programs.

§ 170.627 What regulations apply to BIA force account project activities?

The applicable FAR and Federal law apply to BIA force account project activities.

§ 170.628 How do legislation and procurement requirements affect the IRR program?

Other legislation and procurement requirements apply to the IRR program as shown in the following table.

Legislation, regulation or other requirement	Applies to tribes under self-determination contracts	Applies to tribes under self-governance agreements	Applies to activities performed by the Secretary
(a) Buy Indian Act	No	No	Yes
(b) Buy American Act	No	No	Yes
(c) Federal Acquisition Regulation (FAR)	No [1]	No	Yes
(d) Federal Tort Claims Act	Yes	Yes	Yes
(e) Davis-Bacon Act	Yes [2]	Yes [2]	Yes

[1] Unless agreed to by the tribe or tribal organization under the ISDEAA, 25 U.S.C. 450j(a), and 25 CFR part 900.115(b).
[2] Does not apply when tribe performs work with its own employees.

§ 170.630 What regulations apply to waivers?

The following regulations apply to waivers:

(a) For self-determination contracts, 25 CFR 900.140–148;

(b) For self-governance agreements, 25 CFR 1000.220–232; and

(c) For direct service, 25 CFR 1.2.

§ 170.631 How does a tribe request a waiver of a Department of Transportation regulation?

Tribes must follow the procedures in the ISDEAA, title I and 25 CFR 900.140 through 900.148 for self-determination contracts and ISDEAA, title IV, 25 CFR 1000.220 through 1000.232 for tribal self-governance agreements with a copy of the request sent to the Secretary of Transportation. When a waiver request is outside the Secretary's authority, the Secretary should forward the request to the Secretary of Transportation.

§ 170.632 Is technical assistance available for self-determination contracts and self-governance agreements under the ISDEAA?

Yes, for tribes or tribal organizations with questions about contracting the IRR Program or IRR project(s), technical assistance is available from BIA. For tribes or tribal organizations with questions about self-governance agreements for the IRR Program or IRR project(s), technical assistance is available from the office of self-governance and BIA.

Technical assistance can include, but is not limited to, assistance in the preparation of self-determination contract proposal(s) and self-governance agreements.

§ 170.633 What IRR programs, functions, services, and activities are subject to the construction regulations set forth in subpart K of 25 CFR part 1000?

All IRR design and construction projects and activities, whether included separately or under a program in the agreement, are subject to the construction regulations set forth in subpart K of 25 CFR part 1000.

§ 170.634 How are IRR program projects and activities included in the self-governance agreement?

IRR Program projects and activities are included in the self-governance agreement as specific line items for each project or activity with sufficient detail to adequately describe the work as included in FHWA-approved IRR TIP and Control Schedule. Also, each agreement must include all other information required under 25 CFR 1000, subpart K.

§ 170.635 Are contract support funds provided in addition to the 2 percent (2%) IRR transportation planning funds?

Contract support costs are an eligible item out of the tribes' IRR Program funds allocation and need to be included in a tribe's budget.

§ 170.636 May contract support costs for IRR construction projects be paid out of Department of the Interior or BIA appropriations?

No, appropriations for the Department of the Interior do not include contract support costs for IRR construction projects as allowable expenditures.

Subpart F—Program Oversight and Accountability

§ 170.700 What is the IRR Program stewardship plan?

The IRR Program stewardship plan delineates the respective roles and responsibilities of BIA and FHWA in the administration of the IRR Program and the process used for fulfilling those roles and responsibilities.

§ 170.701 What is an IRR Program stewardship agreement?

It is an agreement between FHWA and BIA Division of Transportation for assuming FHWA's responsibilities for planning, design, and construction within the IRR Program.

§ 170.702 What is a BIA regional IRR Program stewardship agreement?

It is an agreement between FHWA, BIA Division of Transportation and a BIA regional office for assuming FHWA's responsibilities of the planning, design, and construction within the IRR Program.

§ 170.703 Can a self-determination contract or self-governance agreement serve as an IRR program stewardship agreement?

No, a tribe must use a tribal IRR Program stewardship agreement. It is a separate agreement which details the tribe's assuming a portion of FHWA's and/or BIA's responsibilities for planning, design, and construction within the IRR Program.

§ 170.704 What must be included in a BIA regional or tribal IRR Program stewardship agreement?

At a minimum, these agreements must include:

(a) BIA regional roads or tribal transportation department organization chart;

(b) An IRR project development and construction flow chart;

(c) Description of the transportation planning, design, procurement, project administration, and construction processes to be followed;

(d) IRR design and construction standards to be used in accordance with this part;

(e) List of roles and responsibilities to be assumed;

(f) Provisions and process for obtaining the Secretary's health and safety reviews of the PS&E; and

(g) Provisions and processes for obtaining the facility owner's review of the PS&E.

§ 170.705 What is the process for obtaining the facility owner's review of the PS&E?

The process is as follows:

(a) BIA region or tribe prepares and submits an IRR Program stewardship agreement to BIA Division of Transportation. BIA Division of Transportation forwards a copy to FHWA;

(b) BIA and FHWA visit the tribe or BIA region and evaluate the capabilities to assume the proposed IRR Program responsibilities;

(c) FHWA, in writing, advises the tribe or BIA region of any applicable changes to the proposed stewardship agreement; and

(d) After all changes are made, the revised agreement is approved by FHWA or its designee.

§ 170.706 Can a direct service tribe and BIA region sign a Memorandum of Understanding (MOU)?

Yes, an IRR tribal/BIA region MOU is a document that a direct service tribe and BIA may enter into to help define the roles, responsibilities and consultation process between the regional BIA office and the Indian tribal government. It describes how the IRR Program will be carried out by BIA on the tribe's behalf.

§ 170.707 Are there licensing requirements to ensure standards are met under the IRR Program?

Yes, all engineering work must be performed under the direction of a professionally licensed engineer.

§ 170.708 Must an IRR PS&E be approved before proceeding to construction?

Yes, an IRR PS&E must be approved before proceeding to construction.

Subpart G—BIA Road Maintenance

§ 170.800 What Is IRR Transportation Facility Maintenance?

Maintenance is the performance of activities to keep an IRR transportation facility at its as constructed condition and to insure the health, safety, and economical use of the traveling public. Maintenance means the preservation of IRR transportation facilities including surfaces, shoulders, roadsides, structures, and such traffic control devices as are necessary for safe and efficient utilization of the facility.

§ 170.801 Who owns IRR Transportation Facilities?

IRR transportation facilities are owned by public authorities such as tribes, States, counties, local governments and the Federal Government.

§ 170.802 How is BIA Road Maintenance Program related to the IRR Program?

The following chart illustrates how the BIA Road Maintenance Program is related to other Title 23 United States Code programs and other BIA appropriated programs.

BILLING CODE 4310–L4–P

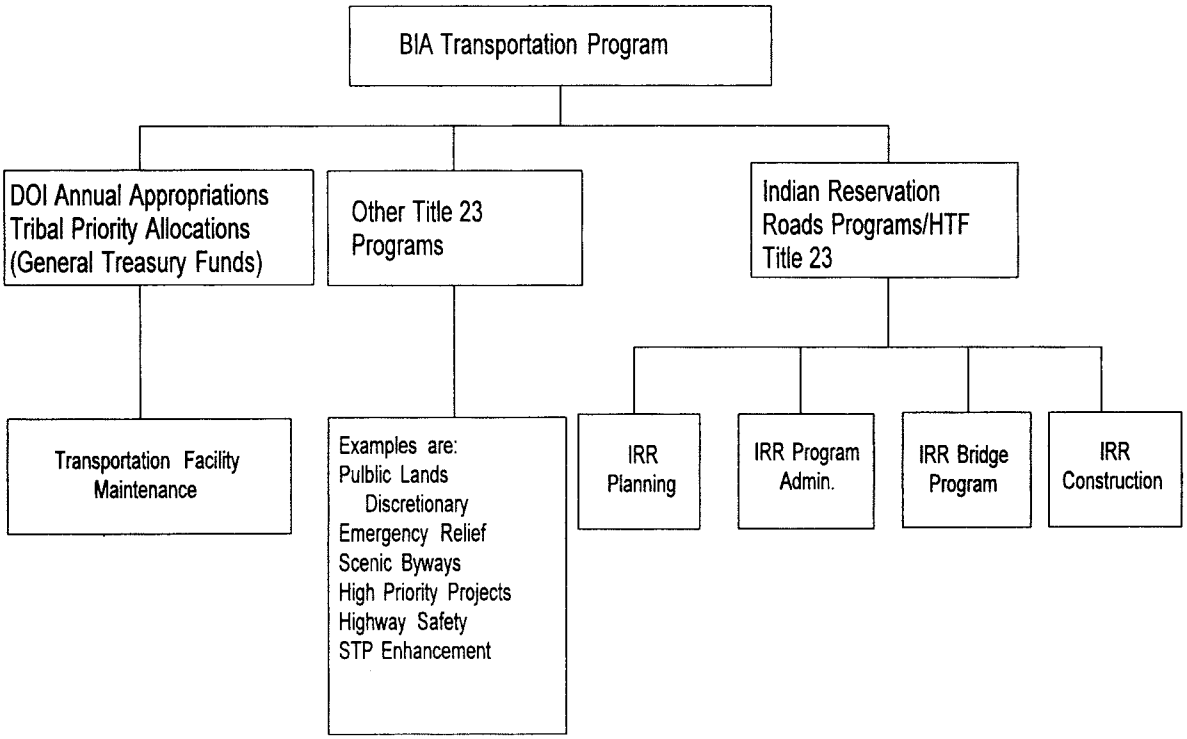

BILLING CODE 4310–L4–C

§ 170.803 How is road maintenance funded?

BIA road maintenance program is funded through the Department of the Interior annual appropriations. All other programs are funded out of the Highway Trust Fund as shown in this subpart.

(a) The States, counties, and local governments fund the maintenance of IRR transportation facilities that they own or have agreed to maintain.

(b) The U.S. Congress funds a BIA program for the maintenance of IRR transportation facilities as defined in this part through annual appropriations for the Department of the Interior.

(c) Tribal governments, at their discretion, may also provide for the

maintenance of IRR transportation facilities.

§ 170.804 What is the BIA Road Maintenance Program?

The BIA Road Maintenance Program is the name of the program that covers the distribution and use of the funds provided by Congress in the annual Department of Interior appropriations acts for maintaining transportation facilities.

§ 170.805 What facilities are eligible for maintenance and operation under the BIA Road Maintenance Program?

(a) The following public transportation facilities are eligible for maintenance under the BIA Road Maintenance Program:

(1) BIA facilities listed in paragraph (b) of this section;

(2) Non-BIA facilities, if the tribe served by the facility feels that maintenance is required to ensure public health, safety, and economy, and if the tribe executes an agreement with the owning public authority within available funding;

(3) Tribal transportation facilities such as public roads, bridges, trails, and bus stations; and

(4) Other transportation facilities as approved by the Secretary.

(b) The following BIA facilities are eligible for maintenance under paragraph (a)(1) of this section:

(1) The BIA road system and related road appurtenances such as signs, traffic signals, pavement striping, trail markers, guardrails, etc.;

(2) Bridges and drainage structures;

(3) Airport runways and heliport pads;

(4) Boardwalks;

(5) Adjacent parking areas;

(6) Maintenance yards;

(7) Bus stations;

(8) System public pedestrian walkways, paths, bike and other trails;

(9) Motorized trails;

(10) BIA and tribal post-secondary school roads and parking lots built with IRR Program Funds; and

(11) Public ferryboats.

§ 170.806 Is maintenance required on facilities built with federal funds?

Yes, maintenance is required on all IRR facilities built with federal transportation funds.

§ 170.807 Do BIA or the tribes have to perform all of the IRR facility maintenance?

(a) State, county, and local governments normally perform the maintenance of their IRR transportation facilities.

(b) Tribes may perform or provide for their maintenance responsibilities by formal agreement or other contracts with any other, State, county, or local government.

(c) BIA's responsibility includes preparing annual budget requests under 23 U.S.C. 204(c) that include a report of the shortfalls in each Region in appropriations of BIA Road Maintenance dollars.

§ 170.808 What activities are eligible for funding under the BIA Road Maintenance Program?

Appendix A to this subpart contains a list of activities that are eligible for funding under the BIA road maintenance program.

§ 170.809 What is an IRR TFMMS?

The IRR Transportation Facilities Maintenance Management Systems (TFMMS) is a tool used by BIA and tribes to budget, prioritize, and efficiently schedule all transportation facility maintenance activities. It is employed to extend the life of an IRR transportation facility, ensure safety and report future funding needs to the Secretary.

§ 170.810 What must an effective IRR TFMMS include at a minimum?

(a) At a minimum the IRR TFMMS system must include components for:

(1) Uniformly collecting, processing, and updating data;

(2) Predicting facility deterioration;

(3) Identifying alternative actions;

(4) Projecting maintenance costs;

(5) Tracking and reporting of actual maintenance costs and activities accomplished;

(6) Forecasting short- and long-term budget needs;

(7) Recommended programs and schedules for implementation within policy and budget constraints;

(8) Tracking and reporting unmet needs; and

(9) Ability to produce various reports, including customized reports.

(b) The minimum data requirements include:

(1) Cost of maintenance activity per mile broken down by surface type and frequency of activity;

(2) Cost of bridge maintenance by surface area of deck and frequency of activity;

(3) Cost of maintenance of other inter-modal facilities;

(4) Information from other IRR management systems;

(5) Future needs; and

(6) Basic facility data including but not limited to route, bridge number, maintenance activity code, facility inspection dates.

§ 170.811 Can Maintenance Program funds be used to upgrade IRR facilities?

No, BIA Road maintenance Program funds must not be used to upgrade roads or other IRR transportation facilities to a higher road classification, standard or capacity.

§ 170.812 Can tribes enter into a self-determination contract or self-governance agreement for the BIA Road Maintenance Program?

Yes, any tribe may enter into contracts or self-governance agreements to conduct IRR transportation facility maintenance under the ISDEAA and 25 CFR part 900 or 1000. This self-determination contract or self-governance agreement does not relieve BIA of its responsibility for maintenance.

§ 170.813 To what standards must an IRR transportation facility be maintained?

IRR transportation facilities must be maintained, subject to availability of funding, in accordance with standards referred to in this part as the IRR Transportation Facility Maintenance Standards (IRR–TFMS). The Secretary will develop these standards with the assistance of the IRR Program Coordinating Committee. The Secretary must accept as interim standards any tribal maintenance standards that meet or exceed applicable Federal standards. Interim standards must include any or a combination of the following:

(a) Appropriate National Association of County Engineers maintenance standards;

(b) AASHTO road and bridge maintenance manuals, latest edition; or

(c) Other applicable Federal, State, tribal, or local government maintenance standards as may be negotiated in an ISDEAA road maintenance contract or self-governance agreement.

§ 170.814 Can BIA Road Maintenance funds be used for heliport facilities?

BIA road maintenance funds may be used to maintain heliports, runways, and public access roads to these facilities.

§ 170.815 What happens if a facility is not being maintained due to lack of funds?

If the Secretary determines that an IRR transportation facility is not being maintained under IRR–TFMS standards due to insufficient funding, the Secretary must report these findings to Congress under 23 U.S.C. 204.

§ 170.816 Must IRR bridge inspections be coordinated with tribal and local authorities?

(a) The certified bridge inspectors working for BIA, State, county or local

governments (per 23 CFR 650.307) must coordinate with the affected tribes, BIA Regional offices, and State or local governments before performing IRR bridge inspections. This coordination must include prior written notification to the tribal and other local public authorities and the opportunity to accompany the inspectors.

(b) When a tribe enters into an ISDEAA contract or self-governance agreement to perform bridge inspections, the certified bridge inspectors working for the tribe must coordinate with the BIA Regional office, and affected State or local governments before performing IRR bridge inspections. Such coordination must include prior written notification to the BIA Regional office and other local public authorities and the opportunity to accompany the inspectors.

§ 170.817 What are the minimum qualifications for certified bridge inspectors?

(a) The person responsible for the bridge inspection team is not required to be on site during all phases of the bridge inspection. The responsible person must possess one or more of the following minimum qualifications:

(1) Be a registered professional engineer;

(2) Be qualified for registration as a professional engineer under the laws of the State; or

(3) Have a minimum of 10 years experience in bridge inspection assignments in a responsible capacity and have completed a comprehensive training course based on the ''Bridge Inspector's Training Manual,'' as revised.

(b) The person signing the bridge inspection report must possess one or more of the following minimum qualifications:

(1) Have the qualifications specified for the individual in charge of the organizational unit delegated the responsibilities for bridge inspection;

(2) Have a minimum of 5 years experience in bridge inspection assignments in a responsible capacity and have completed a comprehensive training course based on the ''Bridge Inspector's Training Manual,'' as revised; or

(3) Have a current certification as a Level III or IV Bridge Safety Inspector under the National Society of Professional Engineer's program for National Certification in Engineering Technologies (NICET) is an alternate acceptable means for establishing that a bridge inspection team leader is qualified.

§ 170.818 Must bridge inspection reports be reviewed?

Yes, the data required to complete the forms and the functions that must be performed to compile the data are contained in section 3 of the AASHTO Manual. Copies of all IRR bridge inspection reports are sent to the respective BIA regional office. The BIA regional office reviews the reports and furnishes the report to the affected tribe for review, comment and use in the programming of transportation projects. After review, the inspection reports for BIA bridges are forwarded to BIADOT for quality assurance and inclusion into the National Bridge Inventory (NBI).

§ 170.819 How often are IRR bridge inspections performed?

IRR Bridge inspections must be performed at least every two years to update the NBI using standards that meet or exceed applicable federal standards (23 CFR 650.305).

§ 170.820 What standards are used for bridge inspections?

(a) Federal standards for bridge inspections are found in 23 CFR 650, subpart C.

(b) Tribes may develop alternative bridge inspection standards, provided that these standards meet or exceed applicable Federal standards.

§ 170.821 What is emergency maintenance?

Emergency maintenance is work that must be accomplished immediately because of life threatening circumstances. Examples of emergency maintenance include: Ice and snow control, traffic control, work in slide areas, repairs to drainage washouts, retrieving hazardous materials, suppressing wild fires, and repairing the ravages of other natural disasters.

§ 170.822 What is a Declared State of Emergency?

This is an official declaration of emergency by Federal, State, tribal, or local governments for adverse acts of nature that cannot be scheduled or planned in advance such as wind, earthquakes, floods, fire, and other acts of God.

§ 170.823 When can access to IRR transportation facilities be restricted?

(a) The Secretary may, in consultation with a tribe, restrict or temporarily close an IRR transportation facility to public use for the following reasons:

(1) During unsafe conditions;

(2) During natural disasters;

(3) For fish or game protection;

(4) To prevent traffic from causing damage to the facility; and

(5) For reasons deemed to be in the public interest such as fire prevention or suppression as approved by the Secretary.

(b) Certain IRR Transportation facilities owned by the tribes or BIA may be permanently closed when the tribal governments and the Secretary have agreed the facility's use is no longer needed. Once this determination is made, the facility must be removed from the IRR Transportation Facility Inventory and the BIA Transportation System.

Appendix A to Subpart G

List of Activities Eligible for Funding Under The BIA Transportation Facility Maintenance Program

The following activities are eligible for BIA Transportation Facility Maintenance Program. The list is not all-inclusive.

1. Cleaning and repairing ditches and culverts.
2. Stabilizing, removing, and controlling slides, drift sand, mud, ice, snow, and other impediments.
3. Adding additional culverts to prevent roadway and adjoining property damage.
4. Repairing, replacing or installing traffic control devices, guardrails and other features necessary to control traffic and protect the road and the traveling public.
5. Removing roadway hazards.
6. Repairing or developing stable road embankments.
7. Repairing parking facilities and appurtenances such as striping, lights. curbs, etc.
8. Repairing transit facilities and appurtenances such as bus shelters, striping, sidewalks, etc.
9. Training maintenance personnel.
10. Administration of the BIA Transportation Facility Maintenance Program.
11. Performing environmental/archeological mitigation associated with transportation facility maintenance.
12. Leasing, renting, or purchasing of maintenance equipment.
13. Paying utilities cost for roadway lighting and traffic signals.
14. Purchasing maintenance materials.
15. Developing, implementing, and maintaining an IRR Transportation Facility Maintenance Management System (TFMMS).
16. Performing pavement maintenance such as pot hole patching, crack sealing, chip sealing, surface rejuvenation, and thin overlays (less than 1 inch).
17. Performing erosion control.
18. Controlling roadway dust.
19. Re-graveling roads.
20. Controlling vegetation through mowing, noxious weed control, trimming, etc.
21. Making bridge repairs.
22. Paying the cost of closing of transportation facilities due to safety or other concerns.
23. Maintaining airport runways, heliport pads, and their public access roads.
24. Maintaining and operating BIA public ferryboats.

25. Making highway alignment changes for safety reasons. These changes require prior notice to the Secretary.

26. Making temporary highway alignment or relocation changes for emergency reasons.

27. Maintaining other IRR intermodal transportation facilities provided that there is a properly executed agreement with the owning public authority within available funding.

Subpart H—Miscellaneous

Hazardous and Nuclear Waste Transportation

§ 170.900 What is the purpose of the provisions relating to transportation of hazardous and nuclear waste?

Sections 170.900 through 170.907 on transportation of nuclear and hazardous waste are provided for information only, do not create any legal responsibilities or duties for any person or entity, and are not intended to create any basis for a cause of action under the Federal Tort Claims Act.

§ 170.901 What standards govern transportation of radioactive and hazardous materials?

DOT, International Atomic Energy Agency, U.S. Nuclear Regulatory Commission (NRC) and the Environmental Protection Agency have established standards and regulations for the shipment of radioactive and hazardous materials. Legal authority includes, but is not limited to, 23 U.S.C. 141; 23 U.S.C. 127; 49 CFR parts 107, 171 through 180; 10 CFR part 71.

§ 170.902 What transport activities do State, tribal, and local governments perform?

State, tribal, and local governments typically provide for the safety of their residents and other persons and protection of resources within their jurisdictions. With respect to radioactive and hazardous materials, some state, tribal, and local governments choose to enact legislation, execute cooperative agreements, designate alternate transportation routes, develop emergency response plans, perform emergency response, issue permits, conduct vehicle inspections, enforce traffic laws, and perform highway construction and maintenance. These activities must not conflict with Federal laws and regulations.

§ 170.903 How is a tribe notified of the transport of radioactive waste?

The Department of Energy (DOE) has elected, by policy, to notify tribal governments of DOE shipments through their jurisdiction.

§ 170.904 Who responds to an accident involving a radioactive or hazardous materials shipment?

Tribal, federal, local, and state police, fire departments, and rescue squads are often the first to respond to transportation accidents involving radioactive or hazardous materials. If radioactive materials are involved, then DOE typically takes steps to ensure that the appropriate state and tribal agencies are contacted and coordinate any necessary Radiological Assistance Program team activities. These teams may include nuclear engineers, health physicists, industrial hygienists, public affairs specialists, and other personnel who provide field monitoring, sampling, decontamination, communications, and other services as may be requested.

§ 170.905 Can tribes use IRR Program funds for training in handling radioactive and hazardous material?

No, Tribes cannot use IRR Program construction funds to train personnel to handle radioactive and hazardous material.

§ 170.906 Can tribes obtain training in transporting hazardous material?

Yes, Tribes are encouraged to seek training from DOE, EPA, NRC, OSHA, states, and other sources. Funding is available from the U.S. DOT under the Hazardous Materials Uniform Safety Act, EPA for monitoring and FEMA for general preparedness. DOE is working with states and tribes to develop a uniform grant for transportation planning for accommodating radioactive and hazardous material transport.

§ 170.907 How are radioactive and hazardous material spills addressed?

The carrier is typically responsible for clean-up with assistance from the shipper using established standards and guidelines. The carrier of the cargo should work with the appropriate tribal, local, state and federal agencies to address all cleanup issues, such as arranging or repackaging of the cargo, if necessary, and disposing of contaminated materials.

Reporting Requirements and Indian Preference

§ 170.910 What information on the IRR Program or projects must BIA provide to tribes?

At the written request of a tribe, BIA must provide available information on the IRR Program within 15 workdays of the request.

§ 170.915 Are Indians entitled to employment and training preferences?

Yes, Federal law gives hiring and training preferences to Indians for all work performed under the IRR Program. Tribal governments and BIA must, to the greatest extent feasible, give hiring and training preferences to Indians when operating IRR programs or projects.

§ 170.916 Are Indian organizations and Indian-owned businesses entitled to a contracting preference?

Yes, under 25 U.S.C. 450e(b) and 23 U.S.C. 204(e), Indian organizations and Indian-owned economic enterprises are entitled to a preference, to the greatest extent feasible, in the award of contracts, subcontracts and sub-grants for all work performed under the IRR Program.

§ 170.918 Is Indian preference permitted for federally funded non-IRR transportation projects?

(a) Indian employment preference is permitted for federally-funded transportation projects not funded under the IRR Program if the project is carried out on an Indian Reservation Road.

(b) Tribal, State, and local governments may provide an employment preference to Indians when administering Federal Lands Highway and Federal-Aid Highway projects on Indian reservation roads. (See 23 U.S.C. 140(d), 204(b), 204(e), and 23 CFR 635.117.)

(c) Tribes may target recruiting efforts toward Indians living on or near Indian reservations, Indian lands, Alaska Native villages, pueblos, and Indian communities.

(d) Tribes and tribal employment rights offices are encouraged to work cooperatively with State and local governments to develop contract provisions promoting employment opportunities for Indians on eligible federally-funded transportation projects. Tribal, State, and local Representatives should confer to establish Indian employment goals for these projects. Once established, the agencies should only change these employment goals after consultation with the affected Indian tribal government(s).

§ 170.919 May tribal-specific employment rights and contract preference laws apply to IRR projects?

Yes, when a tribe or consortium administers an IRR Program intended to benefit that tribe or a tribe within the consortium, the benefitting tribe's employment rights and contracting preference laws apply. (See 25 U.S.C. 450e(c).)

§ 170.920 What is the difference between tribal preference and Indian preference?

Indian preference is a preference for Indians in general. Tribal preference is a preference adopted by a tribal government that may or may not include a preference for Indians in general, Indians of a particular tribe, Indians in a particular region, or any combination thereof.

§ 170.921 May the cost of tribal employment taxes or fees be included in the budget for an IRR project?

Yes, the cost of tribal employment taxes or fees may be included in the budget for an IRR program or project, except for BIA force account.

§ 170.922 May tribes impose taxes or fees on those performing IRR Program services?

Yes, Tribes, as sovereign nations, have inherent authority to impose taxes and fees for IRR activities on or near Indian reservations. When a tribe administers IRR programs or projects under the ISDEAA, its tribal employment and contracting preference laws, including taxes and fees, apply to those IRR activities whether or not the activities occur within the tribe's territorial jurisdiction.

§ 170.923 Can tribes receive direct payment of tribal employment taxes or fees?

This section applies to non-tribally-administered IRR projects. Tribes can request that BIA pay tribal employment taxes or fees directly to them under a voucher or other written payment instrument, based on a negotiated payment schedule. Tribes may consider requesting direct payment of tribal employment taxes or fees from other transportation departments in lieu of receiving their payment from the contractor.

Emergency Relief

§ 170.924 What is the purpose of the provisions relating to emergency relief?

Sections 170.924 through 170.932 relating to emergency relief are provided for information only and do not change the provisions of 23 CFR part 668 or existing guidance on emergency relief.

§ 170.925 What emergency or disaster assistance programs are available?

(a) FHWA operates two emergency relief programs:

(1) The Emergency Relief (ER) Program, which provides disaster assistance for Federal-aid highways owned by State, county and local governments; and

(2) The Emergency Relief for Federally Owned Roads (ERFO) Program, which provides disaster assistance for Federal roads, including Indian reservation roads, which have been damaged due to natural disasters (floods, hurricanes, tornadoes, etc.).

(b) The Federal Emergency Management Agency (FEMA) may be considered as an alternate funding source to repair damage that is ineligible under the ER or ERFO Programs.

§ 170.926 How can States get Emergency Relief Program funds to repair IRR System damage?

A State can request emergency relief program funds to repair damage to Federal-aid highways caused by natural disasters or catastrophic failures. It is the responsibility of individual States to request these funds.

§ 170.927 What qualifies for ERFO funding?

Tribes can use Emergency Relief for Federally Owned Roads (ERFO) funding to repair damage to Indian reservation roads, bridges, and related structures caused by natural disaster over a widespread area or by a catastrophic failure from any external cause. The Secretary of Transportation or his/her designee determines eligible repairs according to procedures in 23 CFR part 668, subpart B.

(a) Examples of natural disasters include, but are not limited to, floods, earthquakes, tornadoes, landslides, avalanches or severe storms, such as saturated surface conditions and/or high-water table caused by precipitation over an extended period of time.

(b) An example of a catastrophic failure includes, but is not limited to, a bridge collapse after being struck by a barge, truck or a landslide.

§ 170.928 What does not qualify for ERFO funding?

Structural deficiencies, normal physical deterioration, and routine heavy maintenance do not qualify for ERFO funding. The Secretary of Transportation or his/her designee determines eligible repairs according to procedures set forth in 23 CFR part 668, subpart B.

§ 170.929 What happens if an ERFO claim is denied?

If DOT denies an ERFO claim, BIA or the affected Indian tribe may appeal the finding or determination to the Secretary of Transportation or his/her designee. The appealing tribe must provide a courtesy copy of its appeal to BIA.

§ 170.930 Is ERFO funding supplemental to IRR Program funding?

Yes, if ERFO funds are approved and available, they can be used to supplement IRR construction and maintenance funds for FHWA-approved repairs. If IRR construction or maintenance funds are used to address an approved claim when ERFO funds are unavailable, the next available ERFO funds may be used to reimburse the construction or maintenance funds expended.

§ 170.931 Can a tribe administer ERFO repairs under a self-determination contract or a self-governance agreement?

Yes, ERFO funding is not part of the recurring base funding in a self-determination contract or self-governance agreement.

§ 170.932 How can FEMA Program funds be accessed to repair damage to the IRR System?

A tribe can request FEMA Program funds for emergency repairs to damaged roads on the IRR system if the President has declared a major disaster or emergency. The tribe makes the request by submitting an SF 424, Application for Federal Assistance, directly to FEMA, as described in FEMA Response and Recovery Directorate 9512.4 (Dec. 28, 1999). Tribes can also ask States to seek FEMA Program funds to repair damage to roads in the IRR System.

Tribal Transportation Departments

§ 170.936 Can a tribe establish a Tribal Transportation Department?

Yes, Tribal governments, as sovereign nations, have inherent authority to establish their own transportation departments under their own tribal laws.

§ 170.937 How can tribes find out information about staffing and organization of tribal transportation departments?

Tribes may staff and organize transportation departments in any manner that best suits their needs. Tribes can receive technical assistance from Indian LTAP centers, BIA road engineers, or AASHTO to establish a tribal transportation department.

§ 170.938 Are there any other funding sources available to operate tribal transportation departments?

There are many sources of funds that may help support a tribal transportation department. These include, but are not limited to, the sources listed below. Note that each source has its own terms and conditions of assistance.

(a) Tribal general funds;
(b) Tribal Priority Allocation (TPA);
(c) Revenue from States and counties;
(d) Fare collections;
(e) Aviation fees;
(f) Tribal permits and license fees;
(g) Tribal fuel tax;

(h) Federal, state, private and local transportation grants assistance;

(i) Funds for transit, safety and education from other federal programs;

(j) TERO fees;

(k) Capacity building grants from Administration for Native Americans and other organizations; and

(l) Federal Aviation Administration grants and education from other federal programs.

§ 170.939 Can tribes use IRR Program funds to pay for costs to operate a tribal transportation department?

Yes, Tribes can use IRR Program funds to pay the cost of administration and performance of approved IRR Program activities. Tribes can also use BIA road maintenance funds to pay the cost of administration and performance of maintenance activities under this part.

§ 170.940 Can tribes regulate oversize or overweight vehicles?

Yes, Tribal governments, as sovereign nations, have the authority to regulate travel on roads under their jurisdiction and to establish a permitting process to regulate the travel of oversize or overweight vehicles, in accordance with applicable federal law. BIA may, with the consent of the affected tribe, establish a permitting process to regulate the travel of oversize or overweight vehicles on BIA-system roads.

Arbitration Provisions

§ 170.941 Are alternative dispute resolution procedures available to self-determination and self-governance tribes and the Secretary to resolve disputes between them in performing IRR Public Law 93–638 activities?

Yes, except as required in 25 CFR part 900 and part 1000, tribes and tribal organizations are entitled to use the appropriate dispute resolution techniques or procedures set out in:

(a) The ADR Act, 5 U.S.C. 571–583;

(b) The Contract Disputes Act, 41 U.S.C. 601–613; and

(c) The Indian Self-Determination and Education Assistance Act (including the mediation and alternative dispute resolution options listed in 25 U.S.C. 4501 (model contract section (b)(12)) and the implementing regulations for non-construction activities.

§ 170.942 Are alternative dispute resolution procedures available to resolve IRR program disputes?

Yes, Federal agencies are authorized and encouraged to use mediation, conciliation, arbitration, and other techniques for the prompt and informal resolution of disputes brought by IRR Program beneficiaries. The goal of these alternative dispute resolution (ADR) procedures is to provide an inexpensive and expeditious forum to resolve disputes. Federal agencies are authorized and encouraged to resolve disputes at the lowest possible staff level and in a consensual manner whenever possible.

§ 170.943 How does a direct service tribe begin the alternative dispute resolution process?

(a) To begin the ADR process, a direct service tribe must write to the Regional Director or the Chief of the BIA Division of Transportation. The letter must:

(1) Ask to begin one of the alternative dispute resolution (ADR) procedures in the Administrative Dispute Resolution Act of 1996, 5 U.S.C. 571–583 (ADR Act); and

(2) Explain the factual and/or legal basis for the dispute.

(b) ADR proceedings will be governed by procedures in the ADR Act and the implementing regulations.

Other Miscellaneous Provisions

§ 170.950 How can a tribe or tribal organization find out if the ISDEAA has superseded an IRR provision?

Any tribe or tribal organization may ask the Secretary for a determination that the ISDEAA has superseded a law or regulation. This would mean that the law has no applicability to any contract or self-governance agreements.

(a) The Secretary must provide an initial decision on the request within 75 days after receipt.

(b) If the Secretary denies the request, the tribe or tribal organization may appeal under 25 CFR 900.150 and 1000.201.

(c) The Secretary must provide notice of each determination made under this subpart to all tribes and tribal organizations.

§ 170.951 Can tribes become involved in transportation research?

Yes, Tribes may:

(a) Participate in Transportation Research Board meetings, committees, and workshops sponsored by the National Science Foundation;

(b) Participate in and coordinate the development of tribal and IRR transportation research needs;

(c) Submit transportation research proposals to States, FHWA, AASHTO, and FTA;

(d) Prepare and include transportation research proposals in their IRR TIPS;

(e) Access Transportation Research Information System Network (TRISNET) database; and

(f) Participate in transportation research activities under Intergovernmental Personnel Act agreements.

§ 170.952 Are federal funds available for coordinated transportation services for a tribe's Welfare-to-Work, Temporary Assistance to Needy Families, and other quality of life improvement programs?

Yes, IRR Program funds can be used to coordinate transportation related activities in conjunction with tribal resources to help provide adequate access to jobs and make education, training, childcare, healthcare and other services more accessible to tribal members as part of IRR Program transportation planning activities. IRR Program funds may also be used as the matching share for other federal, state, and local mobility programs. To the extent authorized by law, additional grants and programs funds are available for this purpose from other Federal programs administered by such departments as the Department of Transportation, Department of Health and Human Services and Department of Labor. Tribes are also encouraged to apply for federal and state public transportation and personal mobility programs grants and funds.

[FR Doc. 02–18801 Filed 8–6–02; 8:45 am]

BILLING CODE 4310–LY–P

Federal Register

Wednesday,
August 7, 2002

Part III

Environmental Protection Agency

40 CFR Parts 85 and 86

Motor Vehicle and Engine Compliance Program Fees for: Light-Duty Vehicles; Light-Duty Trucks; Heavy-Duty Vehicles and Engines; Nonroad Engines and Motorcycles; Proposed Rule

ENVIRONMENTAL PROTECTION AGENCY

40 CFR Parts 85 and 86

[AMS–FRL–7250–1]

RIN 2060–AJ62

Motor Vehicle and Engine Compliance Program Fees for: Light-Duty Vehicles; Light-Duty Trucks; Heavy-Duty Vehicles and Engines; Nonroad Engines; and Motorcycles

AGENCY: Environmental Protection Agency.

ACTION: Notice of proposed rulemaking.

SUMMARY: Today's action proposes to update the current Motor Vehicle and Engine Compliance Program (MVECP) fees regulation under which fees are collected for certification and compliance activities related to light-duty vehicles and trucks, heavy-duty highway vehicles and engines, and highway motorcycles. Today's action proposes to update the fees regulations to reflect increased costs of administering the compliance programs already covered within the existing MVECP fee program. In addition, EPA is proposing to add a fee program for the nonroad compliance programs that have been implemented since the initial MVECP fees regulation including certain nonroad compression ignition, locomotive, and small spark ignition engines. EPA is also proposing to add a fee program for other nonroad categories including recreational vehicles (including snowmobiles, off-road motorcycles and all-terrain vehicles), recreational marine compression ignition engines and the remaining nonroad large spark ignition engines (engines over 37 kW) compliance programs for which emission standards have been proposed but not yet finalized. Also included in this proposal are fees for marine spark ignition/inboard sterndrive engines; the emission standards for these engines are under development but not yet proposed.

DATES: *Comments:* Send written comments on this document by October 19,2002.

Hearings: We will hold a public hearing on September 19, 2002. The hearing will begin at 10 a.m. and continue until all testimony has been presented. If you want to testify at the hearing, notify either contact person below by September 12, 2002. See Section VII. A. and B. of the **SUPPLEMENTARY INFORMATION** section of this document for more information about public hearings and comment procedures.

ADDRESSES: *Comments:* You may send written comments in paper form or by e-mail. We must receive them by the date indicated under **DATES** above. Send paper copies of written comments (in duplicate, if possible) to either contact person listed below or by e-mail to ''*otaqfees@epa.gov*''. In your correspondence, refer to Docket A–2001–09.

EPA's air docket makes materials related to this rulemaking available for review in EPA Air Docket No. A–2001–09. Until August 26, 2002, the docket is located at The Air Docket, 401 M. Street, SW., Washington, DC 20460, and may be viewed in room M1500 between 8 a.m. and 5:30 p.m., Monday through Friday. The telephone number is (202) 260–7548 and the facsimile number is (202) 260–4400. After August 26, 2002, the Air Docket will be located at room B–108, 1301 Constitution Avenue, NW., Washington, DC 20460. A reasonable fee may be charged by EPA for copying docket material.

Hearings: We will hold a public hearing at the Towsley Auditorium, Morris Lawrence Building, Washtenaw Community College, Ann Arbor, MI. See Section VII. A. and B. for more information about public hearings and comment procedures.

FOR FURTHER INFORMATION CONTACT: Lynn Sohacki, Certification and Compliance Division, U.S. Environmental Protection Agency, 2000 Traverwood, Ann Arbor, Michigan 48105, Telephone 734–214–4851, Internet e-mail ''*sohacki.lynn@epa.gov,*'' or Trina D. Vallion, 734–214–4449, Internet e-mail ''*vallion.trina@epa.gov.*''

SUPPLEMENTARY INFORMATION:

Regulated Entities

Entities potentially regulated by this action are those which manufacture or seek certification (''manufacturer'' or ''manufacturers'') of new motor vehicles and engines (including both highway and nonroad). The table below shows the category, North American Industry Classification System (NAICS) Codes, Standard Industrial Classification (SIC) Codes and examples of the regulated entities:

Category	NAICS Codes [1]	SIC Codes [2]	Examples of potentially regulated entities
Industry	333111	3523	Farm Machinery and Equipment Manufacturing.
Industry	333112	3524	Lawn and Garden Tractor and Home Lawn and Garden Equipment Manufacturing.
Industry	333120	3531	Construction Machinery Manufacturing.
Industry	333131	3532	Mining Machinery and Equipment Manufacturing.
Industry	333132	3533	Oil & Gas Field Machinery.
Industry	333210	3553	Sawmill & Woodworking Machinery.
Industry	333924	3537	Industrial Truck, Tractor, Trailer, and Stacker Machinery Manufacturing.
Industry	333991	3546	Power Driven Handtool Manufacturing.
Industry	336111	3711	Automotive and Light-Duty Motor Vehicle Manufacturing.
Industry	336120	3711	Heavy Duty Truck Manufacturing.
Industry	336213	3716	Motor Home Manufacturing.
Industry	336311	3592	Motor Vehicle Gasoline Engine and Engine Parts Manufacturing.
Industry	336312	3714	Gasoline Engine & Engine Parts Manufacturing.
Industry	336991	3751	Motorcycle, Bicycle, and Parts Manufacturing.
Industry	336211	3711	Motor Vehicle Body Manufacturing.
Industry	333618	3519	Gasoline, Diesel & dual-fuel engine Manufacturing.
Industry	811310	7699	Commercial & Industrial Engine Repair and Maintenance.
Industry	336999	3799	Other Transportation Equipment Manufacturing.
Industry	421110	.....	Independent Commercial Importers of Vehicles and Parts.
Industry	333612	3566	Speed Changer, Industrial High-speed Drive and Gear Manufacturing.
Industry	333613	3568	Mechanical Power Transmission Equipment Manufacturing.

Category	NAICS Codes [1]	SIC Codes [2]	Examples of potentially regulated entities
Industry	333618	3519	Other Engine Equipment Manufacturing.

[1] North American Industry Classification System (NAICS)
[2] Standard Industrial Classification (SIC) system code.

This table is not intended to be exhaustive, but rather provides a guide for readers regarding entities EPA is now aware could potentially be regulated by this proposed action. Other types of entities not listed in the table could also be regulated. To determine whether your product would be regulated by this proposed action, you should carefully examine the applicability criteria in title 40 of the Code of Federal Regulations, parts 86, 89, 90, 91, 92 and 94; also parts 1045, 1048, and 1051 when those Parts are finalized. If you have questions regarding the applicability of this proposed action to a particular product, consult the person listed in the preceding **FOR FURTHER INFORMATION CONTACT** section.

Obtaining Rulemaking Documents Through the Internet

The preamble and regulatory language of today's proposal, and the Motor Vehicle and Engine Compliance Program Cost Analysis document (which is an explanation how we determined EPA's costs to conduct the MVECP and the proposed fees to cover the program) are also available electronically from the EPA Internet Web site. This service is free of charge. The official EPA version is made available on the day of publication on the primary Web site listed below. The EPA Office of Transportation and Air Quality also publishes these notices on the secondary Web site listed below.

(1) *http://www.epa.gov/docs/fedrgstr/EPA–AIR/* (either select desired date or use Search feature)

(2) *http://www.epa.gov/OTAQ/* (look in ''What's New'' or under the specific rulemaking topic)

Please note that due to differences between the software used to develop the document and the software into which the document may be downloaded, changes in format, page length, etc. may occur.

Table of Contents

I. Introduction
A. Overview
B. What Programs Are Covered by the Fees?
II. Background
A. Basis for Action under the Clean Air Act and Other Legal Authority
B. How Do EPA's Compliance Programs Work?
C. How Does this Rulemaking Affect the Proposed Recreational Vehicles Rule and Future Rules?
D. How Does the Fuel Economy Program Work?
III. Proposed Fee System
A. What Agency Costs Are Recoverable by Fees?
B. What OTAQ Activities Are Not Included in the Agency's Proposed Fee Program?
C. How did the Agency Analyze the Costs of the Compliance Programs?
D. Proposed Fee Schedule
E. Will the Fees Automatically Increase to Reflect Future Inflation?
F. Comments on the Proposed Fee System
IV. Fee Collection and Transactions
A. Procedure for Paying Fees
B. What is the Implementation Schedule for Fees?
C. What Happens to the Money That Is Collected by the Fees Program?
D. Can I Qualify for a Reduced Fee?
E. What Is the Refund Policy?
V. What Other Options Were Considered by EPA When Proposing this Rule?
A. Separate Fees for Other ICI Categories Beyond Light-Duty
B. Start Updating Fees for Cost of Inflation in 2004 Model Year
VI. What Is the Economic Impact of this Proposed Rule?
VII. How Can I Participate in the Rulemaking Process?
A. How to Make Comments and Use the Public Docket
B. Public Hearings
VIII. What are the Administrative Requirements for this Proposal?
A. Executive Order 12866: Administrative Designation and Regulatory Analysis
B. Regulatory Flexibility Act (RFA), as amended by the Small Business Regulatory Enforcement Fairness Act of 1996 (SBREFA), 5 USC 601 et. seq
C. Paperwork Reduction Act
D. Unfunded Mandates Reform Act
E. National Technology Transfer and Advancement Act
F. Executive Order 13045: Children's Health Protection
G. Executive Order 13132: Federalism
H. Executive Order 13211: Energy Effects
I. Executive Order 13175: Consultation and Coordination with Indian Tribal Governments

I. Introduction

A. Overview

EPA is proposing to update the current MVECP fees regulation which assesses fees for the EPA's certification and compliance activities related to highway vehicles and engines and to incorporate new fees for certification and compliance activities related to nonroad [1] engines. Currently, fees are collected for certification and compliance activities related to light-duty vehicles and trucks, heavy-duty highway vehicles and engines, and highway motorcycles. Today's action proposes to update the fees regulations to reflect the increased costs of administering the compliance programs already covered within the existing MVECP fee program and to add a fee program for the nonroad compliance programs we have implemented since the initial MVECP fees regulation including nonroad compression ignition, marine spark ignition outboard/personal-water-craft, locomotive, and small spark ignition (less than or equal to 19 kW) engines. We are also proposing to add a fee program for recreational vehicles (including, but not limited to, snowmobiles, off-road motorcycles and all terrain vehicles), recreational marine compression ignition engines and large spark ignition nonroad engines (over 19 kW) compliance programs. Also included in this proposal are fees for marine spark ignition/inboard-sterndrive engines. Hence, under this new proposal all manufacturers and Independent Commercial Importers (ICIs) of light-duty vehicles (LDVs), light-duty trucks (LDTs), heavy-duty vehicles (HDVs), heavy-duty highway engines (HDEs), nonroad spark and compression ignition engines (NR), marine compression and spark ignition engines (including recreational applications), locomotives, highway and off-road motorcycles (MCs), and recreational vehicles would be subject to fees. Table II–B.1 below lists the vehicle and engine classes that are affected by today's proposed action.

A certificate of conformity is generally required when a manufacturer [2] decides to market new vehicles or engines in the United States (see discussion below for complete discussion of when a certificate of conformity is required).

[1] Nonroad engines are defined in 40 CFR 89.2. It is a general term which encompasses all the regulated subclasses including, but not limited to, both CI and SI engines used in: farm and construction equipment, marine applications, recreation applications, and locomotives.

[2] Manufacturer, as used in this NPRM, means all entities or individuals requesting certification, including, but not limited to, Original Equipment Manufacturers, ICIs, and vehicle or engine converters.

Before issuing that certificate, EPA must perform certain activities necessary to ensure compliance with regulations implemented within the Motor Vehicle and Engine Compliance Program (MVECP). The MVECP includes all activities conducted by EPA that are associated with certification, fuel economy, Selective Enforcement Auditing (SEA), and in-use compliance monitoring and audits. Such MVECP activities include: Providing certification assistance during the pre-production phase; pre-certification confirmatory testing of vehicles; laboratory correlation; certification compliance audits and investigations; conducting fuel economy selection, testing, and labeling; selective enforcement audits (SEA); providing manufacturers and ICIs with CAFE calculations; monitoring of in-use vehicles and engines; monitoring/data review of mandatory production line (PLT) and in-use testing; and Agency-run in-use surveillance and/or recall tests.

In accordance with the Clean Air Act, as amended in 1990 (CAA), and the Independent Office of Appropriations Act (IOAA), EPA is authorized to collect fees for specific services it provides to manufacturers. Section 217 of the CAA (42 U.S.C. 7552) permits the EPA to establish fees to recover all reasonable costs associated with (1) new vehicle or engine certification under section 206(a) or part C,[3] (2) new vehicle or engine compliance monitoring and testing under section 206(b) or part C, and (3) in-use vehicle or engine compliance monitoring under section 207(c) or part C. Secondly, the authority to collect fees is also provided by the IOAA (31 U.S.C. 9701) which permits a government agency to establish fees for a service or thing of value provided by the agency to an identifiable recipient. Finally, Office of Management and Budget (OMB) Circular No. A–25 Revised, establishes Federal policy regarding fees assessed for Government services and for the sale or use of Government goods or resources and provides guidance for agency implementation of charges and the deposition of collections.

The MVECP fees have been in existence since 1992. The first fees regulations (57 FR 30055) were published on July 7, 1992, establishing MVECP fees to recover all reasonable costs associated with certification and compliance programs within the Office of Transportation and Air Quality (OTAQ), then called Office of Mobile Sources (OMS). In 1999, under the Compliance Assurance Program (CAP 2000) regulations (64 FR 23906), the provisions for fees were updated to reflect several changes in the costs of the MVECP. The fees regulations were further modified by a regulatory amendment published on March 7, 2000 (65 FR 11904). This amendment, which is applicable to original equipment manufacturers (OEMs) and aftermarket conversion manufacturers, allows a fee waiver for small volume engine families of alternatively fueled vehicles that are certified to the Clean-Fuel Vehicle standards for model years (MY) 2000 through 2003. Since the initial MVECP fees regulation, EPA has incurred additional costs and will continue to incur cost in supporting these current light-duty and heavy-duty compliance programs (including Tier 2 and new heavy-duty engine regulations), and new compliance programs and testing requirements for nonroad. Today's action proposes to update the MVECP fee provisions to reflect these changes.

Manufacturers receive certification and compliance services by initiating a certification request and an application for certification.[4] By determining the EPA activities and associated costs within the MVECP, we calculated a fee for each certification request type. The certification request types are described in more detail later in this proposal. Each request for a certificate of conformity within a certification request type is potentially subject to an equal amount of EPA expenditure related to the applicable certification, fuel economy, SEA, and in-use compliance monitoring and audit programs, thus EPA believes it is fair and equitable to calculate fees in a manner whereby the cost for each certificate within a certification request type is the same.

In summary, today we are proposing to collect fees under the authority of the IOAA and section 217 of the CAA to ensure that the MVECP is self-sustaining to the extent possible. In essence, this proposed regulation will require those manufacturers specially benefitting from the services provided under the MVECP to bear the EPA's cost of administering the program on their behalf.

B. What Programs Are Covered by the Fees?

EPA has a number of different services it provides under the MVECP. Under the MVECP, fees are collected to recover the cost of services associated with: (1) New vehicle or engine certification; (2) new vehicle or engine compliance monitoring (including selective enforcement auditing (SEA) and production line testing (PLT)); (3) in-use vehicle or engine compliance monitoring and testing; and (4) the fuel economy program. These services include: pre-production certification assistance; confirmatory testing of vehicles; laboratory correlation; certification compliance audits and investigations; conducting fuel economy selection, testing, and labeling; selective enforcement audits (SEA); providing manufacturers and ICIs with CAFÉ calculations; monitoring of in-use vehicles and engines; monitoring/data review of mandatory production line and in-use testing; and Agency-run in-use surveillance and/or recall tests. The proposed fees reflect the cost of these activities.

In addition to those services just mentioned, EPA also conducts activities for which a fee is not being proposed at this time. These activities include regulation development and policy, emission factors determination, air quality assessment and analysis, air quality initiatives, and support of state inspection and maintenance (I/M) programs. Under the currentMVECP fees regulation these activities are not covered.

II. Background

A. Basis for Action Under the Clean Air Act and Other Legal Authority

We are amending current fees and setting new fees within the MVECP fees regulation under the authority of section 217 of the Clean Air Act (CAA). EPA is authorized under section 217 of the CAA, as amended by Public Law 101–549, section 225, to establish fees for specific services it provides to vehicle and engine manufacturers. The CAA provides in pertinent part:

(a) Fee Collection.—Consistent with section 9701 of title 31, United

States Code, the Administrator may promulgate (and from time to time revise) regulations establishing fees to recover all reasonable costs to the Administrator associated with—

(1) New vehicle or engine certification under section 206(a) or part C,

(2) New vehicle or engine compliance monitoring and testing under section 206(b) or part C, and

(3) In-use vehicle or engine compliance monitoring and testing under section 207(c) or part C;

The Administrator may establish for all foreign and domestic manufacturers a fee schedule based on such factors as the Administrator finds appropriate and equitable and nondiscriminatory,

[3] Part C of the CAA, as amended, pertains to Clean Fuel Vehicles.

[4] A certification request is defined as a manufacturer's request for certification evidenced by the submission of an application for certification, Engine System Information (ESI) data sheet, or ICI Carry-Over data sheet.

including the number of vehicles or engines produced under a certificate of conformity. In the case of heavy-duty and vehicle manufacturers, fees shall not exceed a reasonable amount to recover an appropriate portion of such reasonable costs.

EPA is also authorized under the Independent Offices Appropriation Act of 1952 to establish fees for Government services and things of value that it provides. This provision, originally designated as 31 U.S.C. 483(a), was codified into law on September 13, 1982, at 31 U.S.C. 9701. This provision encourages Federal regulatory agencies to recover, to the fullest extent possible, costs provided to identifiable recipients. The relevant text states:

(a) It is the sense of Congress that each service or thing of value provided by an agency * * * to a person * * * is to be self-sustaining to the extent possible.

(b) The head of an agency * * * may prescribe regulations establishing the charge for a service or thing of value provided by the agency. Regulations prescribed by the heads of executive agencies are subject to policies prescribed by the President and shall be uniform as practicable. Each charge shall be—

(1) Fair; and

(2) Based on—

(A) Costs to the Government;

(B) The value of the service or thing to the recipient;

(C) Public policy or interest served; and

(D) Other relevant facts.

EPA also intends to follow, and is guided by, the Office of Management and

Budget's Circular No. A–25 (Revised),[5] which establishes Federal policy regarding fees assessed for Government services and for the sale or use of Government goods or resources and was issued under the authority of the IOAA. Included in the Circular's objectives are ensuring that each service provided by an agency to a specific recipient be self-sustaining, and to promote the efficient allocation of the Nation's resources by establishing charges for special benefits provided to a recipient that are at least as great as costs to the Government of providing the special benefits.

Subsequent to EPA's initial rulemaking that set forth the fees for the MVECP,[6] the U.S. Court of Appeals for the D.C. Circuit, upon reviewing EPA's authority to collect fees under the IOAA and section 217, held that for the regulated industry, a certificate of conformity is deemed a benefit specific to the recipient, for purposes of the provision of the Independent Offices Appropriation Act (IOAA); thus authorizing a federal agency to collect fees from a beneficiary of service or thing of value the federal agency provides in order to make the service self-sustaining to the extent possible.[7] The court held that because the Compliance Program confers a specific, private benefit upon the manufacturers, the EPA can lawfully recoup from them the reasonable cost of the program.

Court decisions have also provided guidance on the criteria to be used in implementing fee schedules under the IOAA when user fees are being charged for special benefits. See National Cable Television Ass'n v. Federal Communications Comm'n, 554 F.2d 1094 (D.C. Cir. 1976); *Electronic Industries Association* v. *Federal Communications Comm'n,* 554 F.2d 1109 (D.C. Cir. 1976); and *Capital Cities Communications, Inc.* v. *Federal Communications Comm'n,* 554 F.2d 1135 (D.C. Cir. 1976). These decisions indicate the following factors are relevant in developing a fee program:

1. An agency may impose a reasonable charge on recipients for an amount of work from which the recipients benefit. The fees must be for specific services to specific persons.

2. The fees may not exceed the cost to the agency in rendering the service.

3. An agency may recover the full cost of providing a service to an identifiable beneficiary regardless of the incidental public benefits which may flow from the service.

An agency, when it proposes a fee pursuant to the IOAA to recover special benefits, should also address the following matters set out in *Electronic Industries Ass'n* v. *Federal Communications Comm'n,* 554 F.2d at 1117:

1. The agency must justify the assessment of a fee by a clear statement of the particular service or benefit for which it seeks reimbursement.

2. The agency must calculate the cost basis for each fee by:

a. Allocating specific expenses of the cost basis of the fee to the smallest practical unit;

b. Excluding expenses that serve an independent public interest; and

c. Providing public explanation of the specific expenses included in the cost basis for a particular fee, and an explanation of the criteria used to include or exclude a particular item.

3. The fee must be set to return the cost basis at a rate that reasonably reflects the cost of the services performed and valued conferred on the payor.

As detailed in today's proposal and in the Motor Vehicle and Engine Compliance Program Cost Analysis, EPA believes it has fulfilled all of these aims in developing this proposal.

EPA believes that all the fees included in this proposal are justified based on the tests for fee recovery relating to special benefits applicable under IOAA. In addition, EPA believes that CAA section 217 gives EPA additional support for imposing fees for the programs specified in that section. Section 217 authorizes EPA to establish fees ''[c]onsistent'' with the IOAA ''to recover all reasonable costs to the Administrator associated'' with certification, SEA testing and in-use compliance programs. This section establishes Congress' position that the specified programs provide the type of benefit and have the type of costs that are appropriately recoverable under the IOAA.

In addition to collecting fees for new highway vehicles and engines, EPA believes section 217 also authorizes the collection of fees for EPA certification and compliance activities related to new nonroad vehicles and engines. As noted above, section 217 sets forth the authority for EPA to collect fees for: new vehicle or engine certification activities conducted under section 206(a) of the CAA, new vehicle or engine compliance monitoring and testing under section 206(b) of the CAA (including such activities as SEA and PLT testing), and in-use vehicle or engine compliance monitoring and testing under section 207(c) of the CAA. Section 213 of the CAA[8] creates a statutory program which mirrors that Congress created for the regulation of new highway vehicles and engines. The nonroad standards created under section 213 are in fact subject to the same requirements (*e.g.,* sections 206, 207, 208, and 209) and implemented in the same manner (including certification, SEA, and in-use testing) under the same sections (as those referenced in section 217) as regulations for new highway vehicles and engines under section 202 (with modifications to the implementing nonroad regulations as the Administrator deems appropriate). Therefore, because EPA's certification and compliance activities related to new nonroad vehicles and engines are

[5] See *http://www.whitehouse.gov/omb/circulars/a025/a025.html* the text of which is also contained in the EPA Air Docket No. A–2001–09.

[6] See 57 FR 30055 (July 7, 1992).

[7] See *Engine Manufacturers Association* v. *EPA,* 20 F.3d 1177 (D.C. Cir. 1994).

[8] 42 U.S.C. 7547.

pursuant to sections 206 and 207 and because the text of section 217 authorizes the collection of fees for activities under such sections without limiting it to new highway vehicles and engines, EPA believes collecting fees for new nonroad vehicles and engines certification and compliance activities under section 217 is appropriate as an additional compliance requirement. EPA also believes that the IOAA creates an additional and independent authority for EPA to collect such fees due to the same special and unique benefits that manufacturers of both new highway and nonroad vehicle and engine manufacturers receive from EPA under the certification and compliance services.

Moreover, by providing authority to recover ''all reasonable costs * * * associated'' with the programs, Congress has given EPA authority to impose fees on a basis that can extend beyond the specific criteria used in interpreting the IOAA. See *Florida Power & Light Co.* v. *United States,* 846 F.2d 765 (DC Cir. 1988), cert denied, 109 S. Ct. 1952 (1989). If any commenters believe that any fee proposed by EPA for recovery for the programs identified in CAA section 217 is not recoverable under the IOAA, the commenters are requested to discuss whether, in their view, the fees would be recoverable under the ''all reasonable costs associated'' test found in section 217 and should do so in light of the court decision noted above. Additionally, if any commenters believe that any fee proposed by EPA for recovery is not identified or authorized by section 217, the commenters are requested to identify which portions of the fee program are not identified or authorized and why the provisions of the IOAA would not provide such authorization. As noted in more detail in the reduced fee section of today's preamble, EPA also believes that section 217 and the IOAA allow the Agency to set fees for specific small volume engine families and invites comments on this as well.

B. How Do EPA's Compliance Programs Work?

Certification

Section 203(a) [9] of the CAA requires that a manufacturer of new motor vehicles and new motor vehicle engines obtain a certificate of conformity prior to the distribution into commerce, sale, or offering for sale, or the introduction, or delivery for introduction, into commerce, within the United States of such new motor vehicles or engines. The certificate of conformity covers a defined group of vehicles or engines and has a specified duration referred to as the model year (MY).

''Model year'' is defined in the CAA [10] to be the manufacturer's annual production period (as determined by the Administrator) which includes January 1 of the calendar year. If the manufacturer has no annual production period, the term ''model year'' means the calendar year. For some industries, such as the light duty vehicle industry, the model year typically begins before the calendar year; for example, the 2003 model year might run from August 1, 2002 to July 31, 2003. For other industries it is synonymous with the calendar year and runs from January 1 to December 31. In some cases a model year may be longer than twelve months. However, in all cases the model year refers to an annual production period. Consequently new certificates must be issued each year.

For marine vessels covered under the voluntary IMO program, a letter of compliance is issued instead of a certificate of compliance. For purposes of the fee rulemaking, the letter of compliance will be treated the same as a certificate of compliance. In this case a request for certification shall mean a request for the voluntary IMO letter of compliance. Although such letters of compliance are not a requirement under title II of the CAA, EPA believes that it provides special and unique benefits to the manufacturers of marine vessels that seek and receive EPA services in order to receive letters of compliance. As explained above, EPA believes that the IOAA provides the basis by which to collect fees for this activity. As further discussed below, EPA is also considering and inviting comment on whether to finalize fees for industry categories that may not yet have final emission standards regulations, as part of the overall final fees regulation promulgated from today's proposal or to issue such fees requirements at the time the emission standards themselves become final. EPA anticipates promulgating fees for marine vessels covered under the voluntary IMO program as part of final fees regulation associated with today's proposal.

The group of vehicles or engines covered by a certificate of conformity is called either an ''engine family'' or a ''test group'' depending on the applicable class of vehicles or engines. While the terminology changes between classes, the basic certification unit (or group) is designed to accomplish the same purpose. Only vehicles or engines which are expected to exhibit similar emission characteristics and deterioration are combined together into a single group.

Table II.B–1, below, summarizes the name of these basic certification groups, the location of the general certification and compliance program rules, and the typical number of certificates which are issued for each class of vehicles and engines covered by this proposal. The number of certificates in the following table are projections. If there is a certification program currently active for the class, the number of certificates are based on latest actual numbers. For other industries, the number of certificates is based on projections gathered from the discussions with manufacturers and information presented when the Agency proposed and/or finalized the rules pertaining to the industry.

TABLE II.B–1.—CLASSES OF CERTIFICATES, THEIR UNIT, NUMBER OF CERTIFICATES AND REGULATIONS

Class of vehicles/engines	Basic certification unit	Number of certs	Location or future location of general certification regulations
Light Duty Vehicles & Trucks (LD)	Test Group	411	40 CFR Part 86, Subpart S.
Highway motorcycles (MC)	Engine Family	174	40 CFR Part 86, Subpart E
Heavy-duty Highway Engines	Engine Family	130	40 CFR Part 86, Subpart A.
Nonroad CI Engines	Engine Family	603	40 CFR Part 89.
Heavy-duty Vehicle Evap	Evap Family	42	40 CFR Part 86, Subpart M.
Marine SI Outboard/PWC	Engine Family	155	40 CFR Part 91.

[9] CAA Sec. 213(d) requires that the standards for nonroad engines or vehicles under Sec. 213 be enforced in the same manner as standards prescribed under section 202. As such, EPA applies the provisions of Sec. 203 to nonroad vehicles and engines.

[10] See CAA Sec. 202(b)(3). It is also defined in the applicable Title 40 regulations for the applicable class of vehicle or engine covered.

TABLE II.B–1.—CLASSES OF CERTIFICATES, THEIR UNIT, NUMBER OF CERTIFICATES AND REGULATIONS—Continued

Class of vehicles/engines	Basic certification unit	Number of certs	Location or future location of general certification regulations
Marine CI [a] > 37 kW	Engine Family	40	40 CFR Part 94.
International Maritime Organization [b]	Engine Family	9	
Small Nonroad SI	Engine Family	546	40 CFR Part 90
Locomotives & Locomotive Engines	Engine Family	10	40 CFR Part 92.
Large Nonroad SI (>19 kW) [c]	Engine Family	50	40 CFR Part 1048.
Recreational Marine CI>37 kW [c]	Engine Family	25	40 CFR Part 94.
Marine SI Inboard /Sterndrive [d]	Engine Family	50	40 CFR Part 1045.
Recreational [c] (including Off-road MC, ATV's, Snowmobiles).	Engine Family	100	40 CFR Part 1051.

(a) The rules for these classes are finalized but not yet implemented; numbers are estimates.
(b) The International Maritime Organization (IMO) has established procedures for obtaining a letter of compliance with the MARPOL 73/78 Annex 6 which have not yet been ratified by the U.S.A. Manufacturers of such engines may voluntarily comply with these requirements. EPA has agreed to issue a letter of compliance for such manufacturers who voluntarily comply with the MARPOL 73/78 Annex 6 emission requirements.
(c) The rules for these classes are proposed but not yet finalized; numbers are estimates.
(d) The rules for these classes are under development but not yet finalized; numbers are estimates.

To obtain a certificate, the manufacturers must perform the required testing and fulfill other requirements specified in the applicable regulations listed in the above table. When the manufacturer has satisfied itself that it has complied with all the requirements, it submits an application for certification for review by the Agency. EPA processes these applications and makes a determination of conformance with the CAA and the applicable regulations. If the vehicle or engine satisfies the prescribed emission standards and otherwise complies with the applicable provisions of the regulations, EPA issues a certificate of conformity for the group (*e.g.*, engine family).

The certification process includes, but is not limited to, review of the application for certification, review of the manufacturer's durability and deterioration determination, review of emission-data for test engine selection, review of the manufacturer's justification that auxiliary emission control devices (AECDs) are not defeat devices, and certification request processing and computer support. Other activities related to the certification process include auditing the applicant's testing and data collection procedures, laboratory correlation, and EPA confirmatory testing and compliance inspections and investigations related to certification. The certification program also covers ICI manufacturers review and processing and approval for final importation of vehicles and engines.

SEA and PLT

EPA conducts new vehicle or engine compliance monitoring in the form of Agency-conducted Selective Enforcement Audits (SEA) or manufacturer-conducted production line testing (PLT) programs. The purpose of these programs is to assure that the vehicles that are actually being produced comply with the emission standards. The certification portion of the MVEPC demonstrates that the vehicles are *designed* to pass the standards for the vehicles' useful life through testing of pre-production prototype vehicles or engines. The SEA or PLT testing also serves as some additional proof of in-use compliance for certain programs (where in-use testing is more difficult) by addressing the prototype to production effects on emissions.

SEA activities include the selection and testing of vehicles and engines off the assembly line at various production plants around the world to determine compliance with emission standards. PLT programs require the manufacturer (rather than EPA) to test a percentage of engines as they leave the production line. In either case, if a substantial number of vehicles or engines fail to meet the emission standards the manufacturer could be required to cease production of the failing vehicles until the manufacturer had demonstrated that a new version of the vehicle complied with the standard. The manufacturer may also be required to recall (see discussion below for the meaning of a recall) failing vehicles or engines which have been introduced into commerce.

In-Use Programs

EPA further ensures compliance with the CAA through a variety of in-use testing and in-use defect investigations.

These activities include investigations into potential emission-related defects vehicles and engines and various types of in-use compliance programs. In-use compliance activities ensure that vehicles and engines continue to meet emission standards throughout their useful life.

The type of in-use programs conducted by the Agency vary between the classes of vehicles and engines. These variations contribute to the different fee amounts which the Agency is proposing for different classes. (See Section IV of the Motor Vehicle and Engine Compliance Program Cost Analysis, available in the docket, for details of how the Agency calculated the fee amounts). In all cases, should the Administrator of EPA determine, by whatever means, that a substantial number of any class or category of vehicles or engines, although properly maintained and used, do not comply with their applicable regulations when in actual use throughout their useful life, the Agency requires the manufacturer to submit a plan to remedy the nonconformity of the vehicles or engines. The implementation of the plan to remedy vehicles is called a recall.

The Agency uses data from Selective Enforcement Audits (SEA), manufacturer-supplied production line testing (PLT), Agency-run in-use surveillance and/or recall tests conducted on a dynamometer and/or on the road , manufacturer-run in-use verification program (IUVP) testing, manufacturer-run engine testing and manufacturer-supplied defect reports to evaluate in-use emissions performance for the various classes of engines and vehicles which are certified.

For recall and surveillance testing, the Agency recruits vehicles from their owners and conducts tests either on a dynamometer or on the road using mobile emission measurement equipment. The IUVP program only applies to light-duty vehicles and medium-duty passenger vehicles; it requires manufacturers to conduct a specified amount of testing on in-use vehicles which they procure from

owners. Defect reporting (DR) generally requires manufacturers to notify the Agency when an emission related defect occurs on more than 25 vehicles or engines in use.

The specific programs currently employed by the Agency to assure in-use compliance for the various classes of vehicles and engines are summarized in the following paragraphs. This list is being provided to document the activities considered in the analysis for proposed fees. The Agency may at any time perform other investigations and/or use other sources of data to make compliance determinations of in use vehicles and engines.

The selection of which in-use tools are used by the Agency for each industry is based on the in-use compliance needs. Each of the industries are subject to different regulations which establish different requirements. When the applicable regulations require the manufacturer to supply some form of in-use data, production line data, or aged engine testing; this information makes it easier for the Agency to monitor compliance in actual use. Consequently for those industries the Agency can spend less of its own effort to collect data.

For the light-duty and highway motorcycle programs, the Agency conducts an in-use surveillance and recall program where individual owner's vehicles are recruited and tested by the Agency. This data is augmented by manufacturer-run in-use data to fulfill the requirements of the in-use verification program (IUVP) for light duty vehicles. The Agency also reviews defect reports submitted by the manufacturers for potential in-use problems. Although there is authority for the Agency to conduct SEA testing, EPA does not currently conduct SEA testing for light-duty vehicles.

For heavy-duty highway vehicles and nonroad vehicles, the Agency conducts SEAs and on-the-road emission measurements of engines installed in in-use vehicles. EPA may also remove engines from heavy-duty highway and nonroad vehicles for laboratory testing when problems are found using on-vehicle measurement equipment.

For other classes of engines such as marine SI outboards and personal water craft (PWC), manufacturers are required to age engines in fleets and then perform testing on the engine.

C. How Does This Rulemaking Affect the Proposed Recreational Vehicles Rule and Future Rules?

We are proposing fees for Large Nonroad SI (>19 kW), Recreational Marine CI, Marine SI Inboard and Sterndrive engines, Recreational engines (including Off-Road Motorcycles (MC), All-terrain Vehicles (ATVs), and Snowmobiles) even though emission regulations currently do not exist for those classes. As discussed previously, the Agency has proposed and is in the process of finalizing emission standards (See 66 FR 51098, (October 10, 2001)) or is in the process of preparing to propose emission standards for these industries. The fees listed in the Table III.D–1, below, will apply only after the applicable regulations are effective for these classes of engines. The fees are due only when a manufacturer is making a request for certification.

We are proposing fees for these classes at this time because enough is known of the anticipated Agency costs for the MVECP for these programs and the projected number of certificates to accurately calculate proposed fees. The fees proposed for these programs represent a reasonable but somewhat conservative and low estimate Agency cost and assume either low levels of EPA monitoring or monitoring through manufacturer-run PLT and in-use testing. In the event that the programs for these classes of engines significantly change, the Agency will revise the applicable fee by a separate regulation.

Today's proposal of potential fees for these classes in no way prejudges the outcome of the ongoing emission standards rulemakings.

D. How Does the Fuel Economy Program Work?

The Agency is proposing to continue the current provisions which incorporate the fuel economy program costs into a single fee due at the time of certification for light duty vehicles.

The fuel economy program applies to light duty vehicles only. There are three separate programs: fuel economy labeling and Guide publication, gas guzzler tax, and corporate average fuel economy (CAFÉ).

The fuel economy labeling program is a public information program which is designed to provide the public accurate fuel economy information for comparison purposes. All light duty vehicles are required to have a fuel economy label before they can be introduced into commerce. The label values are also published in the Fuel Economy Guide (a joint publication with the Department of Energy, DOE) and published on the internet on two web sites (*http://www.fueleconomy.gov* and *http://www.epa.gov/autoemissions).* EPA reviews manufacturers' testing, conducts confirmatory testing, audits the manufacturers' label calculations, and determines the classification of vehicles. EPA receives approximately 1000 label calculations in a typical model year. The fuel economy label program is mandated by the Energy Policy and Conservation Act (EPCA), 42 U.S.C. 620, and is codified in regulations in 40 CFR part 600.

The gas guzzler tax program is designed to discourage the purchase of vehicles with particularly poor fuel economy through a tax program administered by the Internal Revenue Service (IRS). Vehicles with a combined fuel economy value below 22.5 mpg must pay a tax which starts at the rate of $1000 per vehicle. EPA determines potential gas guzzlers as part of the labeling process; the final determination of the tax liability is made by the IRS. The gas guzzler program is mandated by the Gas Guzzler Tax Law and is codified in regulations in 40 CFR part 600.

The CAFÉ program is designed to reduce fuel consumption, reduce dependence on foreign oil, and to reduce greenhouse gas emissions from new light duty vehicles. Manufacturers are required to meet specified average fuel economy values. Separate values are specified for cars and trucks.[11] If manufacturers fail to meet the specified standards they are required to pay a fine.[12] The Department of Transportation (DOT) administers the CAFÉ program and collects the fines. Many additional vehicle tests are required to calculate the CAFÉ values. EPA reviews manufacturers' testing and conducts confirmatory testing as necessary. EPA also calculates the CAFÉ values; typically 50 CAFÉ are processed each year. The CAFÉ program is mandated by the Energy Policy and Conservation Act (EPCA), 42 U.S.C. 620, and is codified in regulations in 40 CFR part 600.

The fuel economy and light-duty certification program have substantial overlap. Both programs collect fuel economy and emissions data. Emission-data vehicles provide both emissions and fuel economy data on engine families for which the manufacturer submits a certification request. Further, fuel economy-data vehicles are tested for emissions and must comply with the emission standards. Only then can the fuel economy data be used in the fuel economy program. Thus, each program generates data to support the other and to support decisions on both

[11] Current CAFÉ standards are 27.5 mpg for cars and 20.7 mpg for trucks.

[12] Current fines are $5.50 per tenth of an mpg beneath the standard multiplied by the total number of vehicles in the fleet average. Manufacturers are allowed to carry-forward or carry-back credits up to three years to offset short falls calculated in other years.

certification and fuel economy. This interrelationship has allowed EPA to streamline the certification program and procedures, thereby minimizing costs directly incurred by the industry as well as by EPA. Every vehicle that is certified must also receive a fuel economy label and will ultimately be included in the CAFÉ for that manufacturer.

For these reasons, it is unnecessary, for fee purposes, to distinguish between the efforts expended on fuel economy and certification. Consequently, the Agency is proposing to continue its current practice of assessing light duty vehicle fees based on certification of test groups and including the costs for the fuel economy activities in that single fee.

III. Proposed Fee System

A. What Agency Costs Are Recoverable by Fees?

Today's notice proposes a fee program to recover those costs incurred by EPA in conducting the MVECP as authorized under the CAA and the IOAA. These costs, incurred by EPA while conducting new vehicle and engine certification which includes EPA pre-certification testing, certification compliance audits and investigations, fuel economy labeling, CAFÉ calculations and certificate processing; new vehicle and engine compliance monitoring and testing which includes SEAs and review of manufacturer production line test data; and in-use vehicle or engine compliance monitoring which includes testing of in-use vehicles and engines, in-use audits and reviewing manufacturers' in-use test data. The proposed fees are based on all recoverable direct and indirect costs associated with administering these activities. Recoverable costs include all labor, operating and program costs associated with the activities listed above. Direct labor costs consist of the personnel compensation or pay and benefits for the people that directly administer the MVECP. Indirect labor costs consist of the personnel compensation or pay and benefits for the people that support the employees that directly administer the MVECP. This includes support staff, computer technicians in the lab, managers, etc.

Operating costs include all costs for contracts, parts, supplies and infrastructure, excluding labor costs that are used to support the MVECP. Examples of these costs include travel costs, building space, computer support and training for people who work directly on the MVECP.

Program Costs are those of specific compliance activities conducted for individual industries. These include the costs of testing either at the NVFEL or at a contracted facility, engine procurement for testing, equipment for testing and equipment used in analyzing the test data.

The overall EPA overhead cost is also included in the analysis. The overall EPA overhead costs are costs incurred by other parts of the EPA that support the people working directly on the MVECP. See the Motor Vehicle and Engine Compliance Program Cost Analysis [13] for further discussion.

These costs are all costs of providing a certificate of conformity and the related compliance activities which allows vehicle and engine manufacturers an opportunity to introduce such vehicles and engines into commerce within the United States, and are, therefore, recoverable by fees as stated in the Independent Offices Appropriation Act and the Office of Management and Budget's Circular No. A–25 discussed in Section II.A above. A more complete description of the agency costs that are recoverable by fees is in the Motor Vehicle and Engine Compliance Program Cost Analysis, Section III.A.

B. What OTAQ Activities Are Not Included in the Agency's Proposed Fee Program?

EPA conducts numerous activities related to certification and mobile source air pollution control, in general, for which it is not proposing to charge a fee at this time. These activities include but are not limited to: regulation development, emission factor testing, air quality assessment, support of state inspection and maintenance programs and research. For a more complete description of OTAQ's programs, see Section II.D of the Motor Vehicle and Engine Compliance Program Cost Analysis.

C. How Did the Agency Analyze the Costs of the Compliance Programs?

The proposed fees were based on the Agency's projected costs of providing certification and related compliance programs to manufacturers in the 2003 model year. To determine these projected costs, we conducted an in-depth analysis and detailed all of the direct and indirect costs incurred by EPA to operate the MVECP. Budget data from 2001 was used as a baseline since it is the most current data available. Cost estimates for future compliance programs are based on estimates for the equipment, labor and contract needs required to support new compliance-related programs and regulations and was collected through discussions with senior management. The full discussion of the methods and numbers used in the analysis is contained in the ''Motor Vehicle and Engine Compliance Program Fees Cost Analysis.''

EPA determined that by 2003, significant laboratory equipment modernization will be required to satisfactorily test vehicle and engines at the lower emission levels associated with Tier 2 and new diesel engine emission standards. Consequently, an appropriate portion of the cost of this laboratory upgrade ($10 million dollars of the total $14 million dollar upgrade) was included in the cost analysis that supports this proposal. The 10 million dollar projected, recoverable cost was amortized over 10 years for an annual cost of 1 million dollars. Refer to the Motor Vehicle and Engine Compliance Program Fees Cost Analysis for a complete discussion of the laboratory upgrade costs.

EPA is exploring the possibility of a partnership with industry through a Cooperative Research and Development Agreement (CRADA) that would fully develop and deploy the National Low Emission Vehicle Compliance/Correlation Test Site at the National Vehicle and Fuel Emissions Laboratory. A CRADA agreement may reduce the cost of the laboratory modernization. In the event the EPA enters into such a CRADA and the agreement results in a significant cost savings, EPA may adjust the fees in a future rulemaking. However, at this time EPA believes it is appropriate to include in the costs to be recovered by today's proposal, those projected actual costs associated with the laboratory equipment modification, as such modification is necessary to conduct the MVECP.

Another cost that was projected for 2003 is the cost of a robust highway and nonroad engine compliance program, discussed in more detail in Section V.B of Motor Vehicle and Engine Compliance Program Cost Analysis available in the docket. These costs and the laboratory modernization costs were projected for 2003 and are included in the cost study because they will be incurred by the EPA as part of the MVECP in 2003.

[13] The Motor Vehicle and Engine Compliance Program cost is contained the EPA Air docket No. A–2001–09 and is on the EPA OTAQ website.

D. Proposed Fee Schedule

Today's action proposes the following fees for each certification request:

TABLE III.D–1—PROPOSED FEE SCHEDULE

Category	Certificate type [a]	Fee
LD, excluding ICIs	Fed Certificate	$33,911
LD, excluding ICIs	Cal-only Certificate	16,958
MDPV, excluding ICIs	Fed Certificate	33,911
MDPV, excluding ICIs	Cal-only Certificate	16,958
Complete SI HDVs, excluding ICIs	Fed Certificate	33,911
Complete SI HDVs, excluding ICIs	Cal-only Certificate	16,958
ICIs for the following industries: LD, MDPV, or Complete SI HDVs.	All Types	8,394
MC HW, including ICIs	All Types	2,416
HD HW, including ICIs	Fed Certificate	30,437
HD HW, including ICIs	Cal-only Certificate	827
HDV (evap), including ICIs	Evap Certificate	827
NR CI, including ICIs, but excluding Locomotives, Marine and Recreational engines.	All Types	2,156
NR SI, including ICIs	All Types	827
All Marine, including ICIs	All Types and IMO	827
All Recreational [b], including ICIs, but excluding marine engines	All Types	827
Locomotives, including ICIs	All Types	827

[a] Fed and Cal-only Certificate and IMO is defined in 40 CFR 85.2402
[b] Recreational means the engines subject to 40 CFR 1051 which includes off road motorcycles, all-terrain vehicles and snowmobiles.

The Agency is proposing fees for Large Nonroad SI (>19 kW), Recreational Marine CI, Marine SI Inboard and Sterndrive engines, Recreational engines (including Off Road MC, ATV's, and Snowmobiles) even though emission regulations currently do not exist for those classes. The Agency has proposed (See 66FR 51098, published on October 5, 2001) or is in the process of proposing regulations for these classes.

The fees listed in the above table will apply only after the applicable regulations are effective for these classes of engines. The fees are due only when a manufacturer is making a request for certification. It may be worth noting again, that we are considering whether to finalize the fees for these yet to be regulated industries within the final rule based on today's fee proposal or to finalize the fees associated with these yet to be regulated industries in the emission regulations covering such industries.

E. Will the Fees Automatically Increase To Reflect Future Inflation?

One factor that could keep EPA from recovering the full cost of conducting the MVECP is inflation. To help mitigate the effects of inflation, the Agency is proposing that fees be automatically adjusted annually by the change in the Consumer Price Index starting with the 2005 model year. The Agency is proposing a formula for manufacturers to use to calculate the applicable calculate beginning with the 2005 model year.

Starting with the 2005 model year, fees will be calculated using the following equation:

$$Fees_{MY} = Fees_{base} \times (CPI_{MY-2}/CPI_{2002})$$

Where:

$Fees_{MY}$ is the applicable fee for the model year of the certification request.

$Fees_{base}$ is the applicable fee from paragraph (a) of this section.

CPI_{MY-2} is the consumer price index for all U.S. cities using the ''U.S. city average'' area, ''all items'' and ''not seasonally adjusted'' numbers calculated by the Department of Labor listed for the month of July of the year two years before the model year. (*e.g.,* for the 2005 MY the CPI used in the equation will be calculated based on the date of July, 2003).

CPI_{2002} is the consumer price index for all U.S. cities using the ''U.S. city average'' area, ''all items'' and ''not seasonally adjusted'' numbers calculated by the Department of Labor for December, 2002.

The applicable CPI results calculated by the Department of Labor are currently published on the following internet address: *http://stats.bls.gov/cpihome.htm* by choosing the data option link for ''Consumer Price Index—All Urban Consumers (Current Series)'', then selecting ''U.S. city average'' area, ''all items'' and ''not seasonally adjusted''.

The Agency invites comment on alternate ways to adjust fees for inflation. As a convenience for manufacturers and to avoid errors in calculation, the Agency intends to provide, via a guidance letter, a listing of applicable fees calculated from the above equation for each model year beginning with the 2005 model year. The Agency invites comments regarding potential procedures for notification of the new fee amounts.

F. Comments on the Proposed Fee System

The Agency requests comments on the proposed fee system including the ''Vehicle and Engine Compliance Program Fees Cost Analysis,'' recoverable costs, costs not recovered, the allocation of recoverable costs by compliance industry, and the fees per certificate. Comments can refer to this preamble, the proposed regulations and the cost analysis.

IV. Fee Collection and Transactions

A. Procedure for Paying Fees

Fees must be paid in advance of receiving a certificate. For each certification request, evidenced by an application for certification, ESI data sheet, or ICI Carryover data sheet, manufacturers and ICIs will submit a MVECP Fee Filing Form (filing form) and the appropriate fee in the form of a corporate check, money order, bank draft, certified check, or electronic funds transfer [wire or Automated Clearing House (ACH)], payable in U.S.

dollars, to the order of the U.S. Environmental Protection Agency. The filing form and accompanying fee will be sent to the address designated on the filing form. EPA will not be responsible for fees received in other than the designated location. Applicants will continue to submit the application for certification to the National Vehicle and Fuel Emission Laboratory (NVFEL) in Ann Arbor, Michigan or to the Engine Programs Group in Washington, DC.

To ensure proper identification and handling, the check or electronic funds transfer and the accompanying filing form will indicate the manufacturer's corporate name, the EPA standardized test group or engine family name. The full fee is to accompany the filing form. Partial payments or installment payments will not be permitted. If submitting a wire or an ACH payment the full fee payment does not include the extra fee a banking institution may charge to process the wire or ACH. The Agency invites comment on methods of streamlining the fee payment process while maintaining the requirement that fees are paid in advance of certification services.

B. What Is the Implementation Schedule for Fees?

The fee schedule proposed today will apply to 2003 and later model year vehicles and engines. This proposal will not apply to 2003 model year certification requests received by EPA prior to the effective date of the regulations, providing that they are complete and include all required data.

C. What Happens to the Money That Is Collected by the Fees Program?

Any fees collected for administering the MVECP will be deposited in a special fund in the United States Treasury.

D. Can I Qualify for a Reduced Fee?

EPA believes that an expansive fee reduction policy could violate the very premise underlying section 217 of the CAA: to reimburse the government for the specific regulatory services provided to an applicant. Nevertheless, EPA recognizes that there may be instances, in the case of small engine families, where the full proposed fee may represent an unreasonable economic burden. Therefore, EPA is proposing to continue the current two part test which, if met, would qualify an applicant for a reduction of a portion of the certification fee.

A reduced fee is available when:

(1) The certificate is to be used for the sale of vehicles or engines within the U.S.; and

(2) The full fee for the certification request exceeds 1% of the projected aggregate retail value of all vehicles or engines covered by that certificate.

The proposed requirement that the certificate request pertain to U.S. vehicle/engine sales is intended to exclude fee reductions for certificates used to support foreign vehicle or engine sales. This provision is carried over from the current fees rules. These certificates are not required and represent extra effort expended by the Agency beyond that which is mandated in U.S. laws or regulations. Further, the Certificate of Conformity does not distinguish between U.S. and foreign sales, therefore, although the manufacturer's intention may be to certify vehicles for a foreign market, there is nothing to prohibit the sale of these vehicles in the U.S. Consequently, the Agency is proposing that it is inappropriate to reduce the cost of these certificates below the actual cost to the Agency.

For the first time EPA is also proposing that the reduced fee will be the larger of 1% of the aggregate retail value of the vehicles and engines covered by the certificate or a minimum fee of $300. The $300 minimum fee represents the lowest level of fee that is cost effective for the Agency to collect and still represents actual costs incurred by the Agency in providing services. As noted below, the Agency is proposing two potential ''pathways'' by which a manufacturer can seek to pay a reduced fee. Under either pathway the minimum that a manufacturer will be required to pay is $300. The Agency invites comment on the concept of a minimum fee and the amount of the minimum fee.

The Agency is proposing two separate pathways by which a manufacturer can request and pay a reduced fee amount. One of the purposes of these pathways is to clarify when manufacturers are required to determine the value of the vehicles or engines actually sold under a certificate and to either pay additional fees or seek a refund if necessary. Under the first pathway, the Agency is proposing that manufacturers seeking a reduced fee include in their certification application a statement that the reduced fee is appropriate under the criteria and a calculation of the amount of the reduced fee. The manufacturer's evaluation and submission of a fee amount under this reduced fee provision is subject to EPA review or audit. A manufacturer's statement that it is eligible for a reduced fee can be rejected by EPA if the Agency finds that manufacturer's evaluation does not meet the eligibility requirements for a reduced fee, the amount of the reduced fee was improperly calculated, the manufacturer failed to meet the requirements to calculate a final reduced fee using actual sales data, or the manufacturer failed to pay the net balance due between the initial and final reduce fee calculation (see below for discussion of the final fee calculation, reporting and payment proposals). If the manufacturer's statement of eligibility or request of a reduced fee is rejected by EPA then EPA may require the manufacturer to pay the full fee normally applicable to it or EPA may adjust the amount of the reduced fee that is due or EPA may require the manufacturer to utilize the special fee provisions (the second pathway) which are explained below. To aid our review, the Agency is proposing that the applicant for a reduced fee also provide EPA with a report (called a ''report card''). This report shall include the total number of vehicles ultimately covered by the certificate (the report card shall include information on all certificates held by the manufacturer that were issued with a reduced fee), a calculation of the actual final reduced fee due for each certificate which is derived by adding up the total number of vehicles and their sales prices, a statement of the total initial fees paid by the manufacturer and the total final fees due for the manufacturer. Manufacturers will be required to submit the report card within 30 days of the end of the model year,[14] EPA believes this is reasonable as manufacturers should have final figures for each certificate by this time. Manufacturers will be required to ''true -up'' or submit the final reduced fee due as calculated within the report card within 45 days of the end of the model year. The Agency is proposing to not require payment of the balance when the amount is less than $500 for a manufacturer. (The Agency requests comment on these special provisions.)

In addition, EPA may require that manufacturers submit a report card, with the same or similar information as noted above, for previous model years. The purpose of such report card would be to give EPA assurance that the manufacturer has demonstrated a continuous capability of submitting the necessary year to year report cards and that appropriate fees have been paid. This will assist EPA in its determination as to whether a manufacturer is capable of adequately projecting its annual sales for reduced fee purposes and whether

[14] Typically, this will be the first February 15 after a certificate expires. Certificates generally expire on December 31 of the model year.

the manufacturer shall remain eligible for the reduced fee provisions.

Under the second pathway, EPA is also proposing special provisions for fee payment that are available for manufacturers which, due to the nature of their business, may be unable to make good estimates of the aggregate projected retail value of all the vehicles or engines to be covered by the requested certificate. Examples of manufacturers that may be unable to estimate the number of vehicles and engines covered by a certificate are those that modify customer-owned vehicles (as done by some ICIs and after-market alternative fuel converters) that are uncertain how many owners will approach them to perform this service. Under the special provisions, manufacturers that obtain prior approval from the Agency may pay 1.0% of the retail selling price of 5 vehicles, engines or conversions when applying for a certificate. Manufacturers under this pathway will be required to submit the same report card and true-up the actual amount of reduced fee that is due in the same manner as described above under the first pathway.

Under either pathway, if a manufacturer fails to report within 30 days or pay the balance due by 45 days of the end of the model year, then EPA may refuse to approve future reduced fee requests from that manufacturer. In addition, if a manufacturer fails to report within 30 days and pay the balance due by 45 days of the end of the model year as noted above then the Agency may deem the applicable certificate as void ab initio.

In the case of vehicles or engines which have originally been certified by an OEM but are being modified to operate on an alternative fuel, EPA is proposing that the cost basis for the reduced fee amount be the value-added by the conversion, not the full cost of the vehicle or engine.

On the other hand, ICI vehicles or engines certificates cover vehicles or engines which are imported into the U.S.A. and that were not originally certified by an OEM. As such, EPA costs associated with proving various MVECP services for these vehicles has not yet been recovered. Since the Agency has not received a fee payment for the ''base vehicle'' or the vehicle imported before its conversion to meet U.S. emissions requirements, we are proposing that the cost basis for calculating a reduced fee for an ICI certification shall be based upon the full cost of the vehicle or engine rather than the cost or value of the conversion. As noted above, EPA is already proposing a fee of $8,394 for certain types of ICI certificates as EPA has determined the costs of MVECP services provided for such certificates regardless of the number of vehicles included under such certificates. However, we recognize that this fee or the full fee associated with other types of certificates may represent an unreasonable economic burden on smaller businesses or on the price of vehicles in smaller classes under a certificate. Therefore, EPA is proposing to retain its current requirement that manufacturers pay a fee based on 1% of the aggregate retail sales price (or value) of the vehicles covered by a certificate as EPA believes this best represents the proper balance between recovering the MVECP costs without imposing an unreasonable economic burden. EPA invites comment on the continued use of the 1% multiplier.

For ICI requests EPA proposes to continue the current requirement to calculate the full cost of a vehicle based on a vehicle's average retail price listed in the National Automobile Dealer's Association (NADA) price guide. By using the NADA price guide to establish a vehicle's retail sales price (or value), EPA ensures uniformity and fairness in charging fees. Further, it avoids problems associated with abuse, such as falsification of entry documents, in particular, sales receipts. Where the NADA price guide does not provide the retail price of a vehicle, and in the case of engines, the applicant for a reduced fee must demonstrate to the satisfaction of the Administrator, the actual market value of the vehicle or engine in the United States at the time of final importation. When calculating the aggregate retail sales price of vehicles or engines under the reduced fee provisions such calculation must not only include vehicles and engines actually sold but also those modified under the modification and test options in 40 CFR 85.1509 and 40 CFR 89.609 and those imported on behalf of a private or another owner.

EPA is continuing the current exemption of fees for small volume certification requests for vehicles using alternative fuels through the 2003 model year. EPA believes that this program has completed its purpose of providing a short-term relief for alternative fuel conversion manufacturers. Therefore, starting with the 2004 model year, EPA is no longer including this exemption for alternative fuel convertors, and such convertors shall be subject to the same fee provisions as other manufacturers. This includes the reduced fee provisions.

We believe that this fee reduction proposal will provide adequate relief for small entities that would otherwise have been harmed by a standardized fee. It is important to note that this fee reduction does not raise the fees for other manufacturers; EPA will simply collect less funds. The Agency invites comment on the necessity of a reduced fee provision.

E. What Is the Refund Policy?

Instances may occur in which an applicant submits a filing form with the appropriate fee, has an engine-system combination undergo a portion of the certification process, but fails to receive a signed certificate. Under the current rules, the Agency offers the manufacturer a partial refund in those situations. The Agency retains a portion of the fee to pay for the work which has already been done. This policy has been difficult to administer and required substantial Agency oversight. Consequently, we have included a simplified refund policy in today's proposal.

When a certificate has not been issued, the applicant will be eligible to receive, upon request, a full refund of the fee paid. Optionally, in lieu of a refund, the manufacturer may apply the fee to another certification request. The new refund policy will not reduce the money collected by the Agency because the fee schedule proposed today is based on the number of certificates actually issued rather than the number of certification requests.

The Agency also considered not allowing any refunds if the manufacturer overpaid based on their own projections. However, the Agency was concerned there could be cases where sales were significantly lower than expected and the overpayment amount would be significant. Also, the Agency does not want to encourage manufacturers to systematically under-project the reduced fees on the fear that they might significantly overpay and be unable to obtain a refund. On the other hand, processing refunds costs the Agency time and money and there is a potential for a large number of small refunds that would be not be cost effective for EPA to process or for the manufacturer to request. Therefore, the Agency is proposing to only consider refund requests for a minimum of $500 overpayment. The Agency invites comment on this issue.

V. What Other Options Were Considered by EPA When Proposing This Rule?

A. Separate Fees for Other ICI Categories Beyond Light-Duty

EPA considered continuing the current provisions which charge the

same fee for ICI and OEM manufacturers. However, when the Agency examined the costs associated with ICI and OEM manufacturers, we found the costs associated with administering the light-duty ICI program was lower than for light-duty OEM manufacturers. Consequently, today's proposal includes lower fees for light-duty ICI certificate requests.

EPA considered calculating separate fees for other ICI industries beyond light-duty. Currently, EPA has issued ICI certificates only for highway motorcycles in addition to light-duty. In this case, the costs to the Agency for the MVECP for motorcycles and ICI motorcycles are essentially the same. EPA expects that when other industries have ICI certification requests that the Agency will a similar amount of effort on the ICI manufacturers as the OEM manufacturers. Consequently, the Agency believes that ICI and OEM fees would be similar for all the categories other than light-duty. For that reason, today's proposal does not establish separate fees for ICI manufacturers other than the for the light-duty ICIs.

B. Start Updating Fees for Cost of Inflation in 2004 Model Year

EPA considered updating MVECP fees for the cost of inflation at the start of model year (MY) 2004. We also considered waiting one year to apply inflation costs to fees. We are proposing to postpone this update for one year and apply inflation costs in 2005 MY. The Agency invites comment on updating the fees before the start of MY 2005.

VI. What Is the Economic Impact of This Proposed Rule?

This proposed rule will not have a significant impact on the majority of vehicle and engine manufacturers. The cost to industry will be a relatively small value per unit manufactured for most engine-system combinations.

EPA expects to collect about 18 million dollars annually. This averages out to approximately 50 cents per vehicle or engine sold annually. However, for engine-system combinations with low annual sales volume, the cost per unit could be higher. To remove the possibility of serious financial harm on companies producing only low sales volume designs, the regulations adopted today include a reduced fee provision for small volume engine families to reduce the burden of fees. These provisions should alleviate concerns about undue economic hardship on small volume manufacturers. Refer to the Regulatory Flexibility Act section, Section VIII.B, below, for more discussion on this topic.

VII. How Can I Participate in the Rulemaking Process?

A. How To Make Comments and Use the Public Docket

EPA welcomes comments on all aspects of this proposed rulemaking. Commenters are especially encouraged to give suggestions for changing any aspects of the proposal. All comments, with the exception of proprietary information should be addressed to the EPA Air Docket Section, Docket No. A–2001–09 (see **ADDRESSES**).

Commenters who wish to submit proprietary information for consideration should clearly separate such information from other comments by (1) labeling proprietary information ''Confidential Business Information'' and (2) sending proprietary information directly to the contact person listed (see **FOR FURTHER INFORMATION CONTACT**) and not to the public docket. This will help insure that proprietary information is not inadvertently placed in the docket. If a commenter wants EPA to use a submission labeled as confidential business information as part of the basis for the final rule, then a nonconfidential version of the document, which summarizes the key data or information, should be sent to the docket. Information covered by a claim of confidentiality will be disclosed by EPA only to the extent allowed and by the procedures set forth in 40 CFR part 2. If no claim of confidentiality accompanies the submission when EPA receives it, the submission may be made available to the public without notifying the commenters.

B. Public Hearings

Anyone wishing to present testimony about this proposal at the public hearing (see **DATES**) should, if possible, notify the contact person (see **FOR FURTHER INFORMATION CONTACT**) by September 12, 2002. The contact person should be given an estimate of the time required for the presentation of testimony and notification of any need for audio/visual equipment. Testimony will be scheduled on a first-come, first-serve basis. A sign-up sheet will be available at the registration table the morning of the hearing for scheduling those who have not notified the contact earlier. This testimony will be scheduled on a first-come, first-serve basis to follow the previously scheduled testimony.

EPA requests that approximately 50 copies of the statement or material to be presented be brought to the hearing for distribution to the audience. In addition, EPA would find it helpful to receive an advanced copy of any statement or material to be presented at the hearing at least one week before the scheduled hearing date. This is to give EPA staff adequate time to review such material before the hearing. Such advanced copies should be submitted to the contact person listed.

The comment period will be kept open until October 19, 2002, and therefore will remain open for 30 days following the hearing. All such submittals should be directed to the Air Docket Section, Docket No. A–2001–09 (see **ADDRESSES**). The hearing will be conducted informally, and technical rules of evidence will not apply. A written transcript of the hearing will be placed in the above docket for review. Anyone desiring to purchase a copy of the transcript should make individual arrangements with the court reporter recording the proceedings.

VIII. What Are the Administrative Requirements for This Proposal?

A. Executive Order 12866: Administrative Designation and Regulatory Analysis

Under Executive Order 12866 (58 FR 51735 October 4, 1993), EPA must determine whether this proposed regulatory action is ''significant'' and therefore subject to Office of Management and Budget (OMB) review and the requirements of this Executive Order. The Order defines a ''significant regulatory action'' as one that is likely to result in a rule that may:

(1) Have an annual effect on the economy of $100 million or more or adversely affect in a material way the economy, a sector of the economy, productivity, competition, jobs, the environment, public health or safety, or State, Local, or Tribal governments or communities;

(2) Create a serious inconsistency or otherwise interfere with an action taken or planned by another agency;

(3) Materially alter the budgetary impact of entitlements, grants, user fees, or loan programs, or the rights and obligations of recipients thereof; or

(4) Raise novel legal or policy issues arising out of legal mandates, the President's priorities, or the principles set forth in the Executive Order.

Pursuant to the terms of the Executive Order 12866, it has been determined that this rule is a ''significant regulatory action'' because this rulemaking materially alters user fees. As such, this action was submitted to OMB for review. Changes made in response to OMB suggestions or recommendations

will be documented in the public record.

B. Regulatory Flexibility Act (RFA), as Amended by the Small Business Regulatory Enforcement Fairness Act of 1996 (SBREFA), 5 U.S.C. 601 et seq

The RFA generally requires an agency to prepare a regulatory flexibility analysis of any rule subject to notice and comment rulemaking requirements under the Administrative Procedures Act or any other statute unless the agency certifies that the rule will not have a significant economic impact on a substantial number of small entities. Small entities include small businesses, small organizations, and small governmental jurisdictions. For purposes of assessing the impacts of today's proposed rule on small entities, small entity is defined as: (1) A small business that meets the definition for business based on SBA size standards; (2) a small governmental jurisdiction that is a government of a city, county, town, school district or special district with a population of less than 50,000; and (3) a small organization that is any not-for-profit enterprise which is independently owned and operated and is not dominant in its field. Table VIII.B–1 provides an overview of the primary SBA small business categories potentially affected by this regulation. This list is not intended to be exhaustive, but rather provides a guide regarding entities likely to be regulated by this proposed action.

TABLE VIII.B–1.—PRIMARY SBA SMALL BUSINESS CATEGORIES POTENTIALLY AFFECTED BY THIS PROPOSED REGULATION

Industry	NAICS [a] Codes	Defined by SBA as a small business If: [b]
Farm Machinery and Equipment Manufacturing	333111	<500 employees.
Lawn and Garden Tractor and Home Lawn and Garden Equipment Manufacturing	333112	<500 employees.
Construction Machinery Manufacturing	333120	<750 employees.
Mining Machinery and Equipment Manufacturing	333131	<500 employees.
Turbine and Turbine Generator Set Unit Manufacturing	333611	<1,000 employees.
Speed Changer, Industrial High-speed Drive and Gear Manufacturing	333612	<500 employees.
Mechanical Power Transmission Equipment Manufacturing	333613	<500 employees.
Other Engine Equipment Manufacturing	333618	<1,000 employees.
Nonroad SI engines	333618	<1,000 employees.
Internal Combustion Engines	333618	<1,000 employees.
Industrial Truck, Tractor, Trailer, and Stacker Machinery	333924	<750 employees.
Power-Driven Handtool Manufacturing	333991	<500 employees.
Automobile Manufacturing	336111	<1000 employees.
Light Truck and Utility Vehicle Manufacturing	336112	<1000 employees.
Heavy-Duty Truck Manufacturing	336120	<1000 employees.
Fuel Tank Manufacturers	336211	<1000 employees.
Gasoline Engine and Engine Parts Manufacturing	336312	<750 employees.
Aircraft Engine and Engine Parts Manufacturing	336412	<1000 employees.
Railroad Rolling Stock Manufacturing	336510	<1000 employees.
Boat Building and Repairing	336612	< 500 employees.
Motorcycles and motorcycle parts manufacturers	336991	<500 employees.
Snowmobile and ATV manufacturers	336999	<500 employees.
Independent Commercial Importers of Vehicles and parts	421110	<100 employees.
Engine Repair and Maintenance	811310	<$5 million annual receipts.

Notes:
[a] North American Industry Classification System.
[b] According to SBA's regulations (13 CFR part 121), businesses with no more than the listed number of employees or dollars in annual receipts are considered ''small entities'' for purposes of a regulatory flexibility analysis.

After considering the economic impacts of today's proposed rule on small entities, I certify that this proposed action will not have a significant economic impact on a substantial number of small entities.

A review of rulemakings that set emissions standards for the industries affected by today's proposed rule, including those manufacturers affected by the recreational vehicle proposed rule, showed that approximately 108 small businesses that will be paying fees. EPA examined the cost of the proposed fees and determined that the average cost for manufacturers of all sizes, across industry sectors, is approximately $.41 per vehicle or engine.[15] In addition, under the reduced fee provisions described above in Section IV.D., the fee a manufacturer would pay will not exceed 1.0 percent of the aggregate retail sales price of the vehicles or engines covered by a certificate request or a minimum fee of $300. The reduced fee provision limits the impact of this proposed rule on small entities to 1.0 percent of the aggregate retail sales price or a minimum fee of $300.

EPA believes that in a very small number of cases, the 1.0 percent reduced fee amount will be less than the $300 minimum fee. The minimum, $300 fee is a modest amount and will only be required when engine families have less than $30,000 aggregate retail sales price. While the minimum fee would represent an impact greater than 1.0 percent of the aggregate retail sales price, the $300 amount will not have a significant economic impact on the manufacturers that pay it. This amount would represent a modest cost of doing business.

The following is an example of a reduced fee calculation: If a light-duty vehicle manufacturer has an engine family of 2 vehicles that are sold for $35,000 per vehicle, under the proposed fee schedule the full fee would be $33,911, or $16,958 per engine family ($16,956 or $8,479 per vehicle, respectively), depending upon whether the engine family is certified as a Federal vehicle or California-only engine family. Under the proposal, the

[15] The average costs of the fees per vehicle or engine (fee per unit) for the specific fee categories of Highway Motorcycle, Light-Duty, Light-Duty ICI, Heavy-Duty Highway CI and SI and Nonroad CI categories are shown in Worksheet 2, Appendix C, of the Motor Vehicle and Engine Compliance Program Cost Analysis available in EPA Air Docket No. A–2001–09.

reduced fee would be 1.0 percent of the aggregate retail sales price of the vehicles ($70,000), or $700 (or $350 per vehicle) as shown below:

2 * $35,000 * 0.01 = $700

In another example, a manufacturer of small nonroad spark ignition engines certifies an engine family of 500 engines that are sold for $50 apiece. In this case, under the proposed fee schedule the full fee would be $827. Under the reduced fee provisions, the manufacturer would determine 1 percent of the total retail sales price of the engines and determine whether this amount is less than the full fee or the minimum fee of $300. The aggregated retail sales price of the engines is $25,000; 1.0 percent of that is $250. Therefore, the manufacturer pays the minimum fee of $300 (or $.60 per engine).

500 * $50 * .01 = $250
$250 < $300 minimum fee
Fee = $300

EPA also had a fees rule briefing which was offered in Ann Arbor, MI, to regulated industries on August 29, 2001. The purpose of the briefing was to give businesses enough time to plan for fees in their 2003 FY budgets. We continue to be interested in the potential impacts of the proposed fees on small entities and welcome comments on issues related to such impacts.

C. Paperwork Reduction Act

The information collection requirements in this proposed rule have been submitted for approval to the Office of Management and Budget (OMB) under the Paperwork Reduction Act, 44 U.S.C. 3501 *et seq.* An Information Collection Request (ICR) document has been prepared by EPA (ICR No.) and a copy may be obtained from Susan Auby by mail at Collection Strategies Division; U.S. Environmental Protection Agency (2822); 1200 Pennsylvania Ave., NW, Washington, DC 20460, by email at farmer.sandy@epamail.epa.gov, or by calling (202) 260–4901. A copy may also be downloaded off the internet at *http://www.epa.gov/icr.*

The information to be collected is necessary to assure that the fees collected are properly credited to the both the firm paying them and the specific product to be certified. In addition, under some circumstances, a fee may be reduced or refunded; information collected will be used to verify that such action is appropriate. Except for reduced fees and refunds, the submission of information is mandatory.

The collection is authorized by the Clean Air Act (42 U.S.C. 7552) and the Independent Offices Appropriations Act (31 U.S.C. 9701). Information collected will be available to the public.

EPA estimates that 1600 certifications will be requested annually of which 180 will qualify for a reduced fee. In addition, approximately 50 fee refunds will be processed each year. The total burden of these projected responses per year is 500 hours; an average of 18 minutes per response. There are no capital, start-up, operation, maintenance or other costs associated with this collection.

Burden means the total time, effort, or financial resources expended by persons to generate, maintain, retain, or disclose or provide information to or for a Federal agency. This includes the time needed to review instructions; develop, acquire, install, and utilize technology and systems for the purposes of collecting, validating, and verifying information, processing and maintaining information, and disclosing and providing information; adjust the existing ways to comply with any previously applicable instructions and requirements; train personnel to be able to respond to a collection of information; search data sources; complete and review the collection of information; and transmit or otherwise disclose the information.

An Agency may not conduct or sponsor, and a person is not required to respond to a collection of information unless it displays a currently valid OMB control number. The OMB control numbers for EPA's regulations are listed in 40 CFR part 9 and 48 CFR Chapter 15.

Comments are requested on the Agency's need for this information, the accuracy of the provided burden estimates, and any suggested methods for minimizing respondent burden, including through the use of automated collection techniques. Send comments on the ICR to the Director, Collection Strategies Division; U.S. Environmental Protection Agency (2822); 1200 Pennsylvania Ave., NW., Washington, DC 20460; and to the Office of Information and Regulatory Affairs, Office of Management and Budget, 725 17th St., NW., Washington, DC 20503, marked ''Attention: Desk Officer for EPA.'' Include the ICR number in any correspondence. Since OMB is required to make a decision concerning the ICR between 30 and 60 days after August 7, 2002, a comment to OMB is best assured of having its full effect if OMB receives it by September 6, 2002. The final rule will respond to any OMB or public comments on the information collection requirements contained in this proposal.

D. Unfunded Mandates Reform Act

Title II of the Unfunded Mandates Reform Act of 1995 (UMRA), Public Law 104–4, establishes requirements for Federal agencies to assess the effects of their regulatory action on state, local, and tribal governments and the private sector. Under section 202 of the UMRA, EPA generally must prepare a written statement, including a cost-benefit analysis, for proposed and final rules with ''Federal mandates'' that may result in expenditures by state, local, and tribal governments, in the aggregate, or by the private sector, of $100 million or more in any one year. Before promulgation of an EPA rule for which a written statement is needed, section 205 of the UMRA generally requires EPA to identify and consider a reasonable number of regulatory alternatives and adopt the least costly, most cost-effective or least burdensome alternative that achieves the objectives of the rule. The provisions of section 205 do not apply when they are inconsistent with applicable law. Moreover, section 205 allows EPA to adopt an alternative other than the least costly, most cost-effective or least burdensome alternative if the Administrator publishes with the final rule an explanation why that alternative was not adopted.

Before we establish any regulatory requirement that may significantly or uniquely affect small governments, including tribal governments, we must develop, under section 203 of the UMRA, a small government agency plan. The plan must provide for notifying potentially affected small governments, enabling officials of affected small governments to have meaningful and timely input in the development of our regulatory proposals with significant federal intergovernmental mandates. The plan must also provide for informing, educating, and advising small governments on compliance with the regulatory requirements.

Today's proposed rule contains no Federal mandates for state, local, or tribal governments. Nor does this proposed rule have Federal mandates that may result in the expenditures of $100 million or more in any year by the private sector as defined by the provisions of Title II of the UMRA as the total cost of the fee program is estimated to be below 20 million dollars. Nothing in the proposed rule would significantly or uniquely affect small governments.

E. National Technology Transfer and Advancement Act

Section 12(d) of the National Technology Transfer and Advancement Act of 1995 (NTTAA), Public Law 104–113, 12(d) (15 U.S.C. 272), directs the EPA to use voluntary consensus standards (VCS) in its regulatory activities unless to do so would be inconsistent with applicable law or otherwise impractical. Voluntary consensus standards are technical standards (e.g., materials specifications, test methods, sampling procedures, business practices, etc.) that are developed or adopted by voluntary consensus standard bodies. The NTTAA requires EPA to provide Congress, through OMB, explanations when the Agency decides not to use available and applicable voluntary consensus standards.

EPA welcomes comments on this aspect of the proposed rulemaking and, specifically, invites the public to identify potentially applicable voluntary consensus standards and to explain why such standards should be used in this regulation.

F. Executive Order 13045: Children's Health Protection

Executive Order 13045: ''Protection of Children from Environmental Health Risks and Safety Risks'' (62 FR 19885, April 23, 1997) applies to any rule that: (1) Is determined to be economically significant as defined under Executive Order 12866, and (2) concerns an environmental health or safety risk that EPA has reason to believe may have a disproportionate effect on children. If the regulatory action meets both criteria, the Agency must evaluate the environmental health or safety effects of the planned rule on children, and explain why the planned regulation is preferable to other potentially effective and reasonably feasible alternatives considered by the Agency.

EPA believes this proposed rule is not subject to the Executive Order because it is not an economically significant regulatory action as defined by Executive Order 12866. In addition, this proposed rule is not subject to the Executive Order because it does not involve decisions based on environmental health or safety risks that may disproportionately affect children. Today's proposed rule seeks to implement a fees program and is expected to have no impact on environmental health or safety risks that would affect the public or disproportionately affect children.

G. Executive Order 13132: Federalism

Executive Order 13132, entitled ''Federalism'' (64 FR 43255, August 10, 1999), requires EPA to develop an accountable process to ensure ''meaningful and timely input by State and local officials in the development of regulatory policies that have federalism implications.'' ''Policies that have federalism implications'' is defined in the Executive Order to include regulations that have ''substantial direct effects on the States, on the relationship between the national government and the States, or on the distribution of power and responsibilities among the various levels of government.''

This proposed rule will not have federalism implications. It will not have direct effects on the States, on the relationship between the national government and the States, or on the distribution of power and responsibilities among the various levels of government, as specified in Executive Order 13132. This proposed rule will impose no direct compliance costs on states. Thus, the requirements of section 6 of Executive Order 13132 do not apply to this rule.

In the spirit of Executive Order 13132, and consistent with EPA policy to promote communications between EPA and State and local governments, EPA specifically solicits comment on this proposed rule from State and local officials.

H. Executive Order 13211: Energy Effects

This proposed rule is not a ''significant energy action'' as defined in Executive Order 13211, ''Actions Concerning Regulations That Significantly Affect Energy Supply, Distribution, or Use'' (66 FR 28355 (May 22, 2001) because it will not have a significant adverse effect on the supply, distribution, or use of energy. Further, we have determined that this proposed rule is not likely to have any adverse energy effects.

I. Executive Order 13175: Consultation With Indian Tribal Governments

Executive Order 13175, entitled ''Consultation and Coordination with Indian Tribal Governments'' (65 FR 67249, November 6, 2000), requires EPA to develop an accountable process to ensure ''meaningful and timely input by tribal officials in the development of regulatory policies that have tribal implications.'' This proposed rule does not have tribal implications. It will not have substantial direct effects on tribal governments, on the relationship between the Federal government and Indian tribes, or on the distribution of power and responsibilities between the Federal government and Indian tribes, as specified in Executive Order 13175. The requirements proposed by this action impact private sector businesses, particularly the vehicle and engine manufacturing industries. Thus, Executive Order 13175 does not apply to this rule.

List of Subjects

40 CFR Part 85

Environmental protection, Confidential business information, Imports, Labeling, Motor vehicle pollution, Reporting and recordkeeping requirements, Research, Warranties.

40 CFR Part 86

Environmental protection, Administrative practice and procedure, Air Pollution Control, Confidential business information, Diesel, Gasoline, Fees, Imports, Incorporation by reference, Labeling, Motor vehicle pollution, Motor vehicles, Reporting and recordkeeping requirements.

Dated: July 17, 2002.

Christine Todd Whitman,

Administrator.

For the reasons set forth in the preamble, title 40, chapter I of the Code of Federal Regulations is proposed to be amended as follows:

PART 85—CONTROL OF AIR POLLUTION FROM MOBILE SOURCES

1. The Authority for part 85 continues to read as follows:

Authority: 42 U.S.C. 7401–7671q.

2. Add a new Subpart Y to Part 85 to read as follows:

Subpart Y—Fees for the Motor Vehicle and Engine Compliance Program

Sec.

85.2401 To whom do these requirements apply?
85.2402 [Reserved]
85.2403 What definitions apply to this subpart?
85.2404 What abbreviations apply to this subpart?
85.2405 How much are the fees?
85.2406 Can I qualify for reduced fees?
85.2407 Can I get a refund if I don't get a certificate or overpay?
85.2408 How do I make a fee payment?
85.2409 Deficiencies
85.2410 Special provisions applicable to the 2003 model year only.

Subpart Y—Fees for the Motor Vehicle and Engine Compliance Program

§ 85.2401 To whom do these requirements apply?

(a) This subpart prescribes fees manufacturers must pay for the motor vehicle and engine compliance program (MVECP) activities performed by the EPA. The prescribed fees and the provisions of this subpart apply to manufacturers of:

(1) Light-duty vehicles (cars and trucks) (See 40 CFR Part 86);

(2) Medium Duty Passenger Vehicles (See 40 CFR Part 86);

(3) Complete gasoline-fueled highway heavy duty vehicles (See 40 CFR Part 86);

(4) Heavy-duty highway diesel and gasoline engines (See 40 CFR Part 86);

(5) On-highway motorcycles (See 40 CFR Part 86);

(6) Nonroad compression ignition engines (See 40 CFR Part 89);

(7) Locomotives (See 40 CFR Part 92);

(8) Marine diesel and gasoline engines (See 40 CFR Parts 91, 94, or 1045 and MARPOL 73/78, as applicable);

(9) Small nonroad spark ignition engines (engines ≤ 19kW) (See 40 CFR Part 90);

(10) Recreational vehicles (including, but not limited to, snowmobiles, all-terrain vehicles and off-highway motorcycles) (See 40 CFR Part 1051);

(11) Heavy-duty highway gasoline vehicles (evaporative emissions certification only) (See 40 CFR Part 86); and

(12) Large nonroad spark ignition engines (engines > 19 kW) (See 40 CFR Part 1048).

(b) This subpart applies to manufacturers that submit 2003 and later model year certification requests received on or after [60 days after the date of publication of the final rule].

(c) Certification requests for the 2003 model year which are complete, contain all required data, and are received prior to [60 days after the date of publication of the final rule] are subject to the provisions of 40 CFR part 86, subpart J.

(d) Nothing in this subpart will be construed to limit the Administrator's authority to require manufacturer or confirmatory testing as provided in the Clean Air Act, including authority to require manufacturer in-use testing as provided in section 208 of the Clean Air Act.

§ 85.2402 [Reserved]

§ 85.2403 What definitions apply to this subpart?

(a) The following definitions apply to this subpart:

Agency or EPA means the U.S. Environmental Protection Agency.

Body Builder means a manufacturer, other than the OEM, who installs certified on-highway HD engines into equipment such as trucks.

California-only certificate is a Certificate of Conformity issued by EPA which only signifies compliance with the emission standards established by California.

Certification request means a manufacturer's request for certification evidenced by the submission of an application for certification, ESI data sheet, or ICI Carryover data sheet. A single certification request covers one test group, engine family, or engine system combination as applicable. For HDV evaporative certification, the certification request covers one evaporative family.

Consumer Price Index means the consumer price index for all U.S. cities using the ''U.S. city average'' area , ''all items'' and ''not seasonally adjusted'' numbers calculated by the Department of Labor.

Federal certificate is a Certificate of Conformity issued by EPA which signifies compliance with emission requirements in 40 CFR part 85, 86, 89, 90, 91, 92, 94, 1045, 1048, and/or 1051 as applicable.

Filing form means the MVECP Fee Filing Form to be sent with payment of the MVECP fee.

Fuel economy basic engine means a unique combination of manufacturer, engine displacement, number of cylinders, fuel system, catalyst usage, and other characteristics specified by the Administrator.

MARPOL 73/78 is the international treaty regulating disposal of wastes generated by normal operation of vessels (Title: International Convention for the Prevention of Pollution from Ships).

Recreational means the engines subject to 40 CFR 1051 which includes off road motorcycles, all-terrain vehicles, and snowmobiles.

(b) The definitions contained in the following parts also apply to this subpart. If the term is defined in paragraph (a) of this section then that definition will take precedence.

(1) 40 CFR Part 85;
(2) 40 CFR Part 86;
(3) 40 CFR Part 89;
(4) 40 CFR Part 90;
(5) 40 CFR Part 91;
(6) 40 CFR Part 92;
(7) 40 CFR Part 94;
(8) 40 CFR Part 1045;
(9) 40 CFR Part 1048; and
(10) 40 CFR Part 1051.

§ 85.2404 What abbreviations apply to this subpart?

The abbreviations in this section apply to this subpart and have the following meanings:

Cal—California;
CI—Compression Ignition (Diesel) cycle engine;
CPI—Consumer Price Index;
ESI—Engine System Information;
EPA—U.S. Environmental Protection Agency;
Evap—Evaporative Emissions;
Fed—Federal;
HD—Heavy-duty engine;
HDV—Heavy-duty vehicle;
HW—On Highway versions of a vehicle or engine;
ICI—Independent Commercial Importer;
IMO—International Maritime Organization;
LD—Light-Duty including both LDT and LDV;
LDT—Light-duty truck;
LDV—Light-duty vehicle;
MARPOL—An IMO treaty for the control of marine pollution;
MC—Motorcycle;
MDPV—Medium-Duty Passenger Vehicle;
MVECP—Motor Vehicle and Engine Compliance Program;
MY—Model Year;
NR—Nonroad version of a vehicle or engine;
OEM—Original equipment manufacturer;
SI—Spark Ignition (Otto) cycle engine.

§ 85.2405 How much are the fees?

(a) *Fees for the 2003 and 2004 model years.* The fee for each certification request is in the following table:

Category	Certificate type	Fee
(1) LD, excluding ICIs	Fed Certificate	33,911
(2) LD, excluding ICIs	Cal-only Certificate	16,958
(3) MDPV, excluding ICIs	Fed Certificate	33,911
(4) MDPV, excluding ICIs	Cal-only Certificate	16,958
(5) Complete SI HDVs, excluding ICIs	Fed Certificate	33,911
(6) Complete SI HDVs, excluding ICIs	Cal-only Certificate	16,958

Category	Certificate type	Fee
(7) ICIs for the following industries: LD, MDPV, or Complete SI HDVs.	All Types	8,394
(8) MC HW, including ICIs	All Types	2,416
(9) HD HW, including ICIs	Fed Certificate	30,437
(10) HD HW, including ICIs	Cal-only Certificate	827
(11) HDV (evap), including ICIs	Evap Certificate	827
(12) NR CI, including ICIs, but excluding Locomotives, Marine and Recreational engines.	All Types	2,156
(13) NR SI, including ICIs	All Types	827
(14) All Marine, including ICIs	All Types and IMO	827
(15) All Recreational, including ICIs, but excluding marine engines.	All Types	827
(16) Locomotives, including ICIs	All Types	827

(b) *Fees for 2005 model year and beyond.*

(1) Starting with the 2005 model year, the fees due for each certification request will be calculated using an equation which adjusts the fees in paragraph (a) of this section for the change in the consumer price index.

(2) Fees for 2005 model year and later certification requests will be calculated using the following equation.

$$Fees_{MY} = Fees_{base} \times (CPI_{MY-2} / CPI_{2002})$$

Where:

$Fees_{MY}$ is the applicable fee for the model year of the certification request.

$Fees_{base}$ is the applicable fee from paragraph (a) of this section.

CPI_{MY-2} is the consumer price index for all U.S. cities using the ''U.S. city average'' area , ''all items'' and ''not seasonally adjusted'' numbers calculated by the Department of Labor listed for the month of July of the year two years before the model year. (*e.g.*, for the 2005 MY use the CPI based on the date of July, 2003).

CPI_{2002} is the consumer price index for all U.S. cities using the ''U.S. city average'' area , ''all items'' and ''not seasonally adjusted'' numbers calculated by the Department of Labor for December, 2002.

(c) A single fee will be charged when a manufacturer seeks to certify multiple evaporative families within a single engine family or test group.

(d) A body builder, who exceeds the maximum fuel tank size for a HDV that has been certified by an OEM and consequently makes a request for HDV certification, must pay a separate fee for each certification request. The fee will be that listed in paragraphs (a) and (b) of this section, paragraph (c) does not apply.

§ 85.2406 Can I qualify for reduced fees?

(a) *Eligibility Requirements.* To be eligible for a reduced fee, the following conditions must be satisfied:

(1) The certificate is to be used for sale of vehicles or engines within the United States; and

(2) The full fee for certification request for a MY exceeds 1.0% of the aggregate projected retail sales price of all vehicles or engines covered by that certificate.

(b) *Initial Reduced Fee Calculation.*

(1) If the requirements of paragraph (a) of this section are satisfied, the fee to be paid by the applicant (the ''initial reduced fee'') will be the greater of:

(i) 1.0% of the aggregate projected retail sales price of all the vehicles or engines to be covered by the certification request; or

(ii) A minimum fee of $300.

(2) For vehicles or engines that are converted to operate on an alternative fuel using as the basis for the conversion a vehicle or engine which is covered by an existing OEM certificate of conformity, the cost basis used in this section must be the aggregate projected retail value-added to the vehicle or engine by the conversion rather than the full cost of the vehicle or engine. To qualify for this provision, the applicable OEM certificate must cover the same sales area and model year as requested certificate for the converted vehicle or engine.

(3) For ICI certification requests, the cost basis of this section must be the aggregate projected retail cost of the entire vehicle(s) or engine(s), not just the value added by the conversion. If the vehicles/engines covered by an ICI certificate are not being offered for sale, the manufacturer shall use the fair retail market value of the vehicles/engines as the retail sale price required in this section. For an ICI certification request, the retail sales price (or fair retail market value) must be based on the applicable National Automobile Dealer's Association (NADA) appraisal guide and/or other evidence of the actual market value.

(4) The aggregate cost used in this section must be based on the total projected sales of all vehicles and engines under a certificate, including vehicles and engines modified under the modification and test option in 40 CFR 85.1509 and 89.609. The projection of the number of vehicles or engines to be covered by the certificate and their projected retail selling price must be based on the latest information available at the time of the fee payment.

(5) A manufacturer may submit a reduced fee as described in paragraphs (a) and (b)(1) through (b)(4) of this section if it is accompanied by a certification from the manufacturer that the reduced fee is appropriate under this section. The reduced fee shall be deemed approved, unless EPA determines that the criteria of this section have not been met. The Agency may make such determination either before or after EPA issues a certificate of conformity. If the Agency determines that the requirements of this section have not been met, EPA may:

(i) Require that future reduced fee eligibility determinations be made by the Agency;

(ii) Require that the manufacturer for future reduced fee requests use the special provisions contained in paragraph (b) (7); or

(iii) Deny future reduced fee requests and require submission of the full fee payment until such time as the manufacturer demonstrates to the satisfaction of the Administrator that its reduced fee submissions are based on accurate date and that final fee payments are made within 45 days of the end of the model year.

(6) If the reduced fee is denied by the Administrator, the applicant will have 30 days from the date of notification of the denial to submit the appropriate fee to EPA or appeal the denial.

(7) The following special provisions are available for manufacturers which meet the requirements of paragraph (a) of this section but, due to the nature of their business, are unable to make good estimates of the aggregate projected retail sales price of all the vehicles or engines to be covered by the

certification request as required in paragraph (b)(1) of this section. EPA may also require a manufacturer to use these special provisions rather than the process described in paragraph (b)(5) of this section if EPA makes such a determination under paragraph (b)(5)(ii) of this section.

(i) A manufacturer's request to use of these provisions requires advance Agency approval and will be based on a determination of whether the requirements of this section have been met. The request to use these provisions shall be made prior to the submission of its application for certification. The manufacturer shall provide as part of this request:

(A) A statement that the eligibility requirements of paragraph (a) of this section are satisfied; and

(B) The reasons why it is unable to make a good estimate of the aggregate projected retail sales price of all the vehicles or engines to be covered by the certification request as required in paragraph (b)(1) of this section.

(ii) If the request is approved, the initial reduced fee is the greater of:

(A) 1% of the retail selling price of 5 vehicles, engines, or conversions, as appropriate; or

(B) A minimum fee of $300.

(c) *Final Reduced Fee Calculation and Adjustment.*

(1) Within 30 days of the end of the model year, the manufacturer shall submit a model year reduced fee payment report covering all certificates issued in the model year for which the manufacturer has paid a reduced fee. This report will include:

(i) The fee amount paid at certification time;

(ii) The total actual number of vehicles covered by the certificate;

(iii) A calculation of the actual final reduced fee due for each certificate; and

(iv) A difference between the total fees paid and the total final fees due for the manufacturer.

(2) The final reduced fee shall be calculated using the procedures of paragraph (b) of this section but using actual numbers rather than projections.

(3) If the difference calculated in paragraph (c)(1)(iv) of this section exceeds $500 which is due to the Agency, then the manufacturer shall pay any difference due between the initial reduced fee and the final reduced fee using the provisions of § 85.2408. This payment shall be paid within 45 days of the end of the model year. The total fees paid for a certificate shall not exceed the applicable full fee of § 85.2405. If a manufacturer fails to make complete payment within 45 days or to submit the report under paragraph (c)(1) of this section then the Agency may void *ab initio* the applicable certificate. EPA may also refuse to grant reduced fee requests submitted under paragraph (b)(5) or (b)(7) of this section.

(4) If the initial reduced fee paid exceeds the final reduced fee then the manufacturer may request a refund using the procedures of § 85.2407.

(5) Manufacturers must retain in their records the basis used to calculate the projected sales and fair retail market value and the actual sales and retail price for the vehicles and engines covered by each certificate that is issued under the reduced fee provisions of this section. This information must be retained for a period of at least three years after the issuance of the certificate and must be provided to the Agency within 30 days of request. Manufacturers are also subject to the applicable maintenance of records requirements of Part 86, Subpart A. If a manufacturer fails to maintain the records or provide such records to EPA as required by this paragraph then EPA may void *ab initio* the certificate for which such records shall be kept.

§ 85.2407 Can I get a refund if I don't get a certificate or overpay?

(a) *Full Refund.* The Administrator may refund the total fee imposed by § 85.2405 if the applicant fails to obtain a certificate and requests a refund.

(b) *Partial Refund.* The Administrator may refund a portion of a reduced fee, paid under § 85.2406, due to a decrease in the aggregate projected retail sales price of the vehicles or engines covered by the certification request.

(1) Partial refunds are only available for certificates which were used for the sale of vehicles or engines within the United States.

(2) Requests for a partial refund may only be made once the model year for the applicable certificate has ended. Requests for a partial refund must be submitted no later than six months after the model year has ended.

(3) EPA will only consider requests which result in at least a $500 refund. Smaller amounts of money will not be refunded, nor can they be credited to other certification fee payments due to the Agency.

(4) Requests for a partial refund must include all the following:

(i) A statement that the applicable certificate was used for the sale of vehicles or engines within the United States.

(ii) A statement of the fee amount paid (the reduced fee) under the applicable certificate.

(iii) The actual number of vehicles or engines produced under the certificate (whether or not the vehicles/engines have been actually sold).

(iv) The actual retail selling or asking price for the vehicles or engines produced under the certificate.

(v) The calculation of the reduced fee amount using actual production levels and retail prices. The calculated reduced fee amount may not be less than $300 under the provisions of § 85.2406(b)(1)(ii).

(vi) The calculated amount of the refund. Refund requests for less than $500 will not be considered under the provisions of paragraph (b)(3) of this section.

(c) *Refunds due to errors in submission.* The Agency will approve requests from manufacturers to correct errors in the amount or application of fees if the manufacturer provides satisfactory evidence that the change is due to an accidental error rather than a change in plans. Requests to correct errors must be made to the Administrator as soon as possible after identifying the error. The Agency will not consider requests to reduce fee amounts due to errors that are reported more than 90 days after the issuance of the applicable certificate of conformity.

(d) In lieu of a refund, the manufacturer may apply the refund amount to the amount due on another certification request.

(e) A request for a full or partial refund of a fee or a report of an error in the fee payment or its application must be submitted in writing to: U.S. Environmental Protection Agency, Vehicle Programs and Compliance Division, Fee Program Specialist, National Vehicle and Fuel Emission Laboratory, 2000 Traverwood, Ann Arbor, MI 48105.

§ 85.2408 How do I make a fee payment?

(a) All fees required by this subpart must be paid by money order, bank draft, certified check, corporate check, or electronic funds transfer payable in U.S. dollars to the order of the Environmental Protection Agency.

(b) A completed fee filing form must be sent to the address designated on the form for each fee payment made.

(c) Fees must be paid prior to submission of an application for certification. The Agency will not process applications for which the appropriate fee (or reduced fee amount) has not been fully paid.

(d) If EPA denies a reduced fee, the proper fee must be submitted within 30 days after the notice of denial, unless the decision is appealed. If the appeal is denied, then the proper fee must be submitted within 30 days after the notice of the appeal denial.

§ 85.2409 Deficiencies.

(a) Any filing pursuant to this subpart that is not accompanied by a completed fee filing form and full payment of the appropriate fee is deemed to be deficient.

(b) A deficient filing will be rejected and the amount paid refunded, unless the full appropriate fee is submitted within a time limit specified by the Administrator.

(c) EPA will not process a request for certification associated with any filing that is deficient under this section.

(d) The date of filing will be deemed the date on which EPA receives the full appropriate fee and the completed fee filing form.

§ 85.2410 Special provisions applicable to the 2003 model year only.

(a) For the 2003 model year, the fees specified in sec. 85.2405 of this part will be waived for any light-duty vehicle, light-duty truck, or heavy-duty engine certification request that meets the small volume sales requirements of 40 CFR 86.1838–01 or 86.098–14, as applicable, and:

(1) Is a dedicated gaseous-fueled vehicle or engine; or

(2) Receives a certificate of conformity with the LEV, ILEV, ULEV, or ZEV emissions standards in 40 CFR part 88.

(b) This section does not apply to 2004 model year and later vehicles or engines.

PART 86—CONTROL OF EMISSIONS FROM NEW AND IN-USE HIGHWAY VEHICLES AND ENGINES

3. The Authority for Part 86 continues to read as follows:

Authority: 42 U.S.C. 7401–7671q.

Subpart J—[Amended]

4. Section 86.903–93 is revised to read as follows:

§ 86.903–93 Applicability.

(a) This subpart prescribes fees to be charged for the MVECP for the 1993 through 2003 model year. The fees charged will apply to all manufacturers' and ICIs', LDVs, LDTs, HDVs, HDEs, and MCs. Nothing in this subpart shall be construed to limit the Administrator's authority to require manufacturer or confirmatory testing as provided in the Clean Air Act, including authority to require manufacturer in-use testing as provided in section 208 of the Clean Air Act.

(b) The fees prescribed in this subpart are replaced by the requirements of 40 CFR part 85, subpart Y for 2003 and later certification requests received on or after [60 days after the date of publication of the final rule].

(c) The fees prescribed in this subpart will only apply to those 2003 model year certification requests which are complete, include all data required by this title, and are received by the Agency prior to [60 days after the date of publication of the final rule].

[FR Doc. 02–19563 Filed 8–6–02; 8:45 am]

BILLING CODE 6560–50–P

Federal Register

Wednesday,
August 7, 2002

Part IV

Department of Justice

28 CFR Part 79

Claims Under the Radiation Exposure Compensation Act Amendments of 2000; Final Rule and Proposed Rule

DEPARTMENT OF JUSTICE

28 CFR Part 79

[CIV100F; AG Order No. 2604–2002]

RIN 1105–AA75

Claims Under the Radiation Exposure Compensation Act Amendments of 2000; Technical Amendments

AGENCY: Civil Division, Department of Justice.

ACTION: Final rule.

SUMMARY: The Department of Justice (''the Department'') revises its existing regulations to implement the Radiation Exposure Compensation Act (''the Act,'' or ''RECA''), to reflect amendments to the Act made in the Radiation Exposure Compensation Act Amendments of 2000 (''2000 Amendments''), enacted on July 10, 2000. This is the first of two related rulemakings and is a final rule, technical in nature, providing conforming amendments consistent with the new law. These revisions reflect only those changes specifically set forth in the statute, and other technical amendments. The second related rulemaking is a proposed rule published elsewhere in this issue of the **Federal Register**. The final regulations: expand the list of radiogenic and chronic diseases that are compensable for ''downwinder'' and ''onsite participant'' claimants; eliminate smoking distinctions for all claimants; amend the list of geographical areas to provide additional radiation-affected areas for ''downwinder'' claimants; modify the burden of proof for purposes of claims processing; allow claimants who have previously been denied compensation to file up to three times; and make other technical revisions consistent with the amended Act.

DATES: Effective date: September 6, 2002. This final rule will apply to all claims pending with the Radiation Exposure Compensation Act Program (''Program'') as of this date.

FOR FURTHER INFORMATION CONTACT: Gerard W. Fischer (Assistant Director), (202) 616–4090, and Dianne S. Spellberg (Senior Counsel), (202) 616–4129.

SUPPLEMENTARY INFORMATION:

Background

On July 10, 2000, the Radiation Exposure Compensation Act Amendments of 2000 were enacted, providing expanded coverage to individuals who developed one of the diseases specified in the Act following exposure to radiation related to the Federal Government's atmospheric nuclear weapons program or as a result of employment in the uranium production industry. This rule implements the Act's technical revisions, providing conforming amendments that incorporate the legislative language contained in the amended Act.

Discussion of Final Changes

This rule implements the Act by expanding the list of compensable ''downwinder'' and ''onsite participant'' diseases to include cancers of the lung, male breast, salivary gland, urinary bladder, brain, colon, and ovary. This rule eliminates regulatory distinctions based upon many of the risk factors associated with several of the original diseases, such as ''age at time of initial exposure'' and lifestyle restrictions, such as alcohol consumption and smoking.

The rule amends the list of ''downwinder'' geographical areas, designated as ''affected areas'' for purposes of establishing eligibility, to correlate with the areas specified in the Amended Act, including the addition of two additional counties in the State of Utah (Wayne and San Juan) and five additional counties in the State of Arizona (Coconino, Yavapai, Navajo, Apache, and Gila).

The rule modifies the burden of proof in conformance with the Act's provisions, ensuring that in determining whether each claim filed satisfies the requirements of the Act, all reasonable doubt shall be resolved in favor of the claimant.

Finally, the rule allows claimants who have previously been denied compensation to file up to three more times. This action would allow denied claimants to take advantage of changes in the law that liberalize the eligibility requirements. The Department anticipates that much of the information in refiled claims will have been previously verified. Presently, the regulations permit three attempts at establishing eligibility, so this provision simply continues that process.

Subparts E, F, and G are being reserved for provisions included in a proposed rulemaking that address claims by uranium mine workers, uranium mill workers, and uranium and uranium-vanadium ore transporters, respectively. The proposed rule published elsewhere in this issue of the **Federal Register**. Similarly, § 79.74 of subpart H is reserved for a provision addressing representatives and fees that is part of the proposed rulemaking.

A Proposed Rulemaking Related to This Final Rulemaking

Elsewhere in this issue of the **Federal Register**, the Department is publishing a related, proposed rule, *Claims Under the Radiation Exposure Compensation Act Amendments of 2000; Expansion of Coverage for Uranium Mill Workers and Ore Transporters; Expansion of Coverage of Uranium Miners; Representation and Fees* (CIV 101). That proposed rule primarily addresses compensation for two new claimant categories: uranium mill workers and individuals employed in the transport of uranium ore or vanadium-uranium ore. It also addresses the expanded population of uranium mine workers made eligible for compensation by lowering the radiation exposure threshold for miners, enlarging the number of covered uranium mining states, and including ''aboveground'' miners within the scope of the Act.

Administrative Procedure Act

This rule merely conforms Department regulations to the 2000 Amendments, and makes other technical amendments. It does not expand upon the provisions of the statute. The statutory changes implemented by this rule provide expanded coverage, modify the burden of proof in favor of the claimant, and allow claimants who previously have been denied compensation to file additional times so that they may take advantage of the liberalized eligibility requirements. For the foregoing reasons, the Department finds that it would be unnecessary and contrary to the public interest to provide for notice and public comment on this rule. Accordingly, the Department finds that good cause exists for exempting this rule from the provisions of the Administrative Procedure Act (5 U.S.C. 553(b)) requiring notice of proposed rulemaking and the opportunity for public comment.

Regulatory Flexibility Act

The Attorney General, in accordance with the Regulatory Flexibility Act (5 U.S.C. 605(b)), has reviewed this regulation and by approving it certifies that this regulation will not have a significant economic impact on a substantial number of small entities for the following reason: The claimant population benefitted by these regulations includes individuals who developed a specified illness following exposure to radiation related to the Federal Government's atmospheric nuclear weapons program or as a result of employment in the uranium

production industry. The regulations set forth eligibility criteria that claimants must satisfy in order to receive compensation. They have no impact on small business competitiveness.

Executive Order 12866

This regulation has been drafted and reviewed in accordance with Executive Order 12866, ''Regulatory Planning and Review'' section 1(b), Principles of Regulation. The compensation payments provided for by the Radiation Exposure Compensation Act and the 2000 Amendments and implemented by this rule will exceed $100,000,000 a year for several years. Because of the aggregate size of these payments to eligible individuals, the Office of Management and Budget has determined that this rule is ''economically significant'' as defined by section 3(f)(1) of Executive Order 12866. Accordingly, this rule has been reviewed by OMB.

This rule will not adversely affect the economy, a sector of the economy, productivity, competition, jobs, the environment, public health or safety, or state, local, or tribal governments or communities. Rather, the RECA system is an administrative compensation program that serves to provide payments to individuals who meet the eligibility requirements of the Act and implementing regulations. Accordingly, qualifying individuals receive monetary compensation for certain diseases they developed following exposure to radiation under the conditions set forth in the rule.

Executive Order 13132

This regulation will not have substantial direct effects on the States, on the relationship between the national government and the States, or on the distribution of power and responsibilities among the various levels of government. Therefore, in accordance with Executive Order 13132, it is determined that this rule does not have sufficient federalism implications to warrant the preparation of a Federalism Assessment.

Executive Order 12988

This regulation meets the applicable standards set forth in sections 3(a) and 3(b)(2) of Executive Order 12988, Civil Justice Reform.

Unfunded Mandates Reform Act of 1995

This rule will not result in the expenditure by state, local, and tribal governments, in the aggregate, or by the private sector, of $100,000,000 or more in any one year, and it will not significantly or uniquely affect small governments. Therefore, no actions were deemed necessary under the provisions of the Unfunded Mandates Reform Act of 1995.

Small Business Regulatory Enforcement Fairness Act of 1996

The compensation payments provided for by the Radiation Exposure Compensation Act and the 2000 Amendments and implemented by this rule will exceed $100,000,000 a year for several years. Because of the aggregate size of these payments to eligible individuals, the Office of Management and Budget has determined that this rule is a ''major rule'' as defined by section 251 of the Small business Regulatory Enforcement Fairness Act of 1996, 5 U.S.C. 804.

However, this rule will not result in a major increase in costs or prices or have significant adverse effects on competition, employment, investment, productivity, innovation, or on the ability of United States-based companies to compete with foreign-based companies in domestic and export markets. Rather, the RECA system is an administrative compensation program that serves to provide payments to individuals who meet the eligibility requirements of the Act and implementing regulations. Accordingly, qualifying individuals receive monetary compensation for certain diseases they developed following exposure to radiation under the conditions set forth in the rule.

Further, this rule merely conforms Department regulations to the RECA Amendments of 2000. Also, the statutory changes implemented by this rule provide expanded coverage, modify the burden of proof in favor of the claimant, and allow claimants who have previously been denied compensation to file additional times so that they can take advantage of the liberalized eligibility requirements. For the foregoing reasons, the Department finds that it would be unnecessary and contrary to the public interest for the effectiveness of this rule to be deferred for the time specified by 5 U.S.C. 801. Accordingly, the Department invokes the exception allowed by 5 U.S.C. 808 and determines that this rule should take effect on September 6, 2002, as set forth above in the **DATES** section.

Paperwork Reduction Act

Information collection associated with this regulation has been approved by the Office of Management and Budget under the provisions of the Paperwork Reduction Act of 1995. The OMB control number for this collection is 1105–0052.

List of Subjects in 28 CFR Part 79

Administrative practice and procedure, Authority delegations (Government agencies), Cancer, Claims, Radiation Exposure Compensation Act, Radioactive materials, Reporting and recordkeeping requirements, Uranium mining, Uranium.

Accordingly, part 79 of chapter I of Title 28 of the Code of Federal Regulations is amended as follows:

1. By revising the authority citation to read as follows:

Authority: Secs. 6(a), 6(i) and 6(j), Pub. L. 101–426, 104 Stat. 920, as amended by secs. 3(c)–(h), Pub. L. 106–245, 114 Stat. 501 (42 U.S.C. 2210 note).

2. By revising subparts A through D to read as set forth below;

3. By removing and reserving subparts E and F (§§ 79.40—79.55);

4. By adding and reserving subpart G; and

5. By adding subpart H to read as set forth below.

(**Note:** Appendices A through C remain unchanged.)

The revised and added text reads as follows:

PART 79—CLAIMS UNDER THE RADIATION EXPOSURE COMPENSATION ACT

Subpart A—General

Sec.
79.1 Purpose.
79.2 General definitions.
79.3 Compensable claim categories under the Act.
79.4 Determination of claims and affidavits.
79.5 Requirements for medical documentation, contemporaneous records, and other records or documents.

Subpart B—Eligibility Criteria for Claims Relating to Leukemia

79.10 Scope of subpart.
79.11 Definitions.
79.12 Criteria for eligibility.
79.13 Proof of physical presence for the requisite period and proof of participation onsite during a period of atmospheric nuclear testing.
79.14 Proof of initial exposure prior to age 21.
79.15 Proof of onset of leukemia more than two years after first exposure.
79.16 Proof of medical condition.

Subpart C—Eligibility Criteria for Claims Relating to Certain Specified Diseases Contracted in an Affected Area

79.20 Scope of subpart.
79.21 Definitions.
79.22 Criteria for eligibility.
79.23 Proof of physical presence for the requisite period.

79.24 Proof of initial or first exposure after age 20 for claims under § 79.22(b)(1).
79.25 Proof of onset of leukemia at least two years after first exposure, and proof of onset of a specified compensable disease more than five years after first exposure.
79.26 Proof of medical condition.
79.27 Indication of the presence of hepatitis B or cirrhosis.

Subpart D—Eligibility Criteria for Claims by Onsite Participants

79.30 Scope of subpart.
79.31 Definitions.
79.32 Criteria for eligibility.
79.33 Proof of participation onsite during a period of atmospheric nuclear testing.
79.34 Proof of medical condition.
79.35 Proof of onset of leukemia at least two years after first exposure, and proof of onset of a specified compensable disease more than five years after first exposure.
79.36 Indication of the presence of hepatitis B or cirrhosis.

Subpart E—[Reserved]

Subpart F—[Reserved]

Subpart G—[Reserved]

Subpart H—Procedures

79.70 Attorney General's delegation of authority.
79.71 Filing of claims.
79.72 Review and resolution of claims.
79.73 Appeals procedures.
79.74 [Reserved]
79.75 Procedures for payment of claims.

* * * * *

Subpart A—General

§ 79.1 Purpose.

The purpose of these regulations is to implement the Radiation Exposure Compensation Act (''Act''), as amended by the Radiation Exposure Compensation Act Amendments of 2000, which authorizes the Attorney General of the United States to establish procedures for making certain payments to qualifying individuals who contracted one of the diseases listed in the Act. The amount of each payment and a general statement of the qualifications are indicated in § 79.3(a). The procedures established in these regulations are designed to utilize existing records so that claims can be resolved in a reliable, objective, and non-adversarial manner, quickly and with little administrative cost to the United States or to the person filing the claim.

§ 79.2 General definitions.

(a) *Act* means the Radiation Exposure Compensation Act of 1990, Public Law 101–426, as amended by section 3139 of Public Law 101–510 and by the Radiation Exposure Compensation Act Amendments of 2000, Public Law 106–245 (see 42 U.S.C. 2210 note).

(b) *Child* means a recognized natural child of the claimant, a stepchild who lived with the claimant in a regular parent-child relationship, or an adopted child of the claimant.

(c) *Claim* means a petition for compensation under the Act filed with the Radiation Exposure Compensation Program by a claimant or by his or her eligible surviving beneficiary or beneficiaries.

(d) *Claimant* means the individual, living or deceased, who is alleged to satisfy the criteria for compensation set forth either in section 4 or in section 5 of the Act.

(e) *Contemporaneous Record* means any document created at or around the time of the event that is recorded in the document.

(f) *Eligible surviving beneficiary* means a spouse, child, parent, grandchild or grandparent who is entitled under section 6(c)(4) (A) or (B) of the Act to file a claim or receive a payment on behalf of a deceased claimant.

(g) *Grandchild* means a child of a child of the claimant.

(h) Grandparent means a parent of a parent of the claimant.

(i) *Immediate family member* of a person means a spouse or child if the person is an adult, but if the person is a minor, immediate family member means either parent.

(j) *Indian tribe* means any Indian tribe, band, nation, pueblo, or other organized group or community that is recognized as eligible for special programs and services provided by the United States to Indian tribes.

(k) *Medical document, documentation, or record* means any contemporaneous record of any physician, hospital, clinic, or other certified or licensed health care provider, or any other records routinely and reasonably relied on by physicians in making a diagnosis.

(l) *Onset* or *incidence* of a specified compensable disease means the date a physician first diagnosed the disease.

(m) *Parent* means the natural or adoptive father or mother of the claimant.

(n) *Program or Radiation Exposure Compensation Program* means the component of the Constitutional and Specialized Tort Litigation Section of the Torts Branch of the Civil Division of the United States Department of Justice designated by the Attorney General to execute the powers, duties, and responsibilities assigned to the Attorney General pursuant to pertinent provisions of the Act.

(o) *Spouse* means a wife or husband who was married to the claimant for a period of at least one (1) year immediately before the death of the claimant.

(p) *Trust Fund* or *Fund* means the Radiation Exposure Compensation Trust Fund in the Department of the Treasury, administered by the Secretary of the Treasury pursuant to section 3 of the Act.

§ 79.3 Compensable claim categories under the Act.

(a) In order to receive a compensation payment, each claimant or eligible surviving beneficiary must establish that the claimant meets each and every criterion of eligibility for at least one of the following compensable categories designated in the Act:

(1) *Claims of leukemia.* (i) For persons exposed to fallout from the atmospheric detonation of nuclear devices at the Nevada Test Site due to their physical presence in an affected area during a designated time period, the amount of compensation is $50,000.

(ii) For persons exposed to fallout from the atmospheric detonation of nuclear devices due to their participation onsite in a test involving the atmospheric detonation of a nuclear device, the amount of compensation is $75,000. The regulations governing these claims are set forth in subpart B of this part.

(2) *Claims Related to the Nevada Test Site Fallout.* For persons exposed to fallout from the atmospheric detonation of nuclear devices at the Nevada Test Site due to their physical presence in an affected area during a designated time period, the amount of compensation is $50,000. The regulations governing these claims are set forth in subpart C of this part.

(3) *Claims of Onsite Participants.* For persons who contracted certain specified diseases after onsite participation in the atmospheric detonation of a nuclear device, the amount of compensation is $75,000. The regulations governing these claims are set forth in subpart D of this part.

(4) *Miners' Claims.* For persons who contracted lung cancer or certain nonmalignant respiratory diseases after being employed in uranium mines located in a specified state during the designated time period who were exposed to a specified minimum level of radiation during the course of their employment, the amount of compensation is $100,000. The regulations governing these claims are set forth in subpart E of this part.

(5) *Millers' Claims.* For persons who contracted lung cancer, certain nonmalignant respiratory diseases, renal cancer, or chronic renal disease

(including nephritis and kidney tubal tissue injury) following employment for at least one year (12 consecutive or cumulative months) in a uranium mill in a specified state during the designated time period, the amount of compensation is $100,000. The regulations governing these claims are set forth in subpart F of this part.

(6) *Ore Transporters' Claims.* For persons who contracted lung cancer, certain nonmalignant respiratory diseases, renal cancer, or chronic renal disease (including nephritis and kidney tubal tissue injury) following employment for at least one year (12 consecutive or cumulative months) as a transporter of uranium ore or vanadium-uranium ore from a uranium mine or uranium mill located in a specified state during the designated time period, the amount of compensation is $100,000. The regulations governing these claims are set forth in subpart G of this part.

(b) Any claim that does not meet all the criteria for at least one of these categories, as set forth in these regulations, must be denied.

(c) All claims for compensation under the Act must comply with the claims procedures and requirements set forth in subpart H of this part before any payment can be made from the Fund.

§ 79.4 Determination of claims and affidavits.

(a) The claimant or eligible surviving beneficiary or beneficiaries bears the burden of providing evidence of the existence of each element necessary to establish eligibility under any compensable claim category set forth in § 79.3(a).

(b) In the event that reasonable doubt exists with regard to whether a claim meets the requirements of the Act, that doubt shall be resolved in favor of the claimant or eligible surviving beneficiary.

(c) Written affidavits or declarations, subject to penalty for perjury, will be accepted only for the following purposes:

(1) To establish eligibility of family members as set forth in § 79.71(e), (f), (g), (h), or (i);

(2) To establish other compensation received as set forth in § 79.75(c) or (d);

(3) To establish employment in a uranium mill or as an ore transporter in the manner set forth in §§ 79.53(d) and 79.63(d), respectively; and

(4) To substantiate the claimant's uranium mining employment history for purposes of determining working level months of radiation exposure, in the manner set forth in § 79.43(d), provided the affidavit or declaration:

(i) Is provided in addition to any other material that may be used to substantiate the claimant's employment history as set forth in § 79.43;

(ii) Is made subject to penalty for perjury;

(iii) Attests to the employment history of the claimant; and

(iv) As made by a person other than the individual filing the claim.

§ 79.5 Requirements for medical documentation, contemporaneous records, and other records or documents.

(a) All medical documentation, contemporaneous records, and other records or documents submitted by a claimant or eligible surviving beneficiary to prove any criterion provided for in these regulations must be originals, or certified copies of the originals, unless it is impossible to obtain an original or certified copy of the original. If it is impossible for a claimant to provide an original or certified copy of an original, the claimant or eligible surviving beneficiary must provide a written statement with the uncertified copy setting forth the reason why it is impossible.

(b) All documents submitted by a claimant or eligible surviving beneficiary must bear sufficient indicia of authenticity or a sufficient guarantee of trustworthiness. The Program shall not accept as proof of any criterion of eligibility any document that does not bear sufficient indicia of authenticity, or is in such a physical condition, or contains such information, that otherwise indicates the record or document is not reliable or trustworthy. When a record or document is not accepted by the Program under this section, the claimant or eligible surviving beneficiary shall be notified and afforded the opportunity to submit additional documentation in accordance with § 79.72(b) or (c).

(c) To establish eligibility the claimant or eligible surviving beneficiary may be required to provide additional records to the extent they exist. Nothing in the regulations in this section shall be construed to limit the Assistant Director's ability to require additional documentation.

Subpart B—Eligibility Criteria for Claims Relating to Leukemia

§ 79.10 Scope of subpart.

The regulations in this subpart describe the criteria for eligibility for compensation under section 4(a)(1) of the Act and the evidence that will be accepted as proof of the various criteria. Section 4(a)(1) of the Act provides for a payment of $50,000 to individuals exposed to fallout from the detonation of atmospheric nuclear devices at the Nevada Test Site due to their physical presence in an affected area during a designated time period, and $75,000 to individuals who participated onsite in a test involving the atmospheric detonation of a nuclear device and who later developed leukemia.

§ 79.11 Definitions.

(a) *Affected area* means one of the following geographical areas, as they were recognized by the state in which they are located, as of July 10, 2000:

(1) In the State of Utah, the counties of Beaver, Garfield, Iron, Kane, Millard, Piute, San Juan, Sevier, Washington, and Wayne;

(2) In the State of Nevada, the counties of Eureka, Lander, Lincoln, Nye, White Pine, and that portion of Clark County that consists of townships 13 through 16 at ranges 63 through 71;

(3) In the State of Arizona, the counties of Coconino, Yavapai, Navajo, Apache, and Gila.

(b) *Atmospheric detonation of a nuclear device* means only a test conducted by the United States prior to January 1, 1963, as listed in § 79.31(f).

(c) *Designated time period* means the period beginning on January 21, 1951, and ending on October 31, 1958, or the period beginning on June 30, 1962, and ending on July 31, 1962, whichever is applicable.

(d) *First exposure or initial exposure* means the date on which the claimant was first physically present in the affected area during the designated time period, or the date on which the claimant first participated onsite in an atmospheric nuclear test, whichever is applicable.

(e) *Leukemia* means any medically recognized form of acute or chronic leukemia other than chronic lymphocytic leukemia.

(f) *Onsite* means physical presence above or within the official boundaries of any of the following locations:

(1) The Nevada Test Site (NTS), Nevada;

(2) The Pacific Test Sites (Bikini Atoll, Enewetak Atoll, Johnston Island, Christmas Island, the test site for the shot during Operation Wigwam, the test site for Shot Yucca during Operation Hardtack I, and the test sites for Shot Frigate Bird and Shot Swordfish during Operation Dominic I) and the official zone around each site from which non-test affiliated ships were excluded for security and safety purposes;

(3) The Trinity Test Site (TTS), New Mexico;

(4) The South Atlantic Test Site for Operation Argus and the official zone

around the site from which non-test affiliated ships were excluded for security and safety purposes;

(5) Any designated location within a Naval Shipyard, Air Force Base, or other official government installation where ships, aircraft, or other equipment used in an atmospheric nuclear detonation were decontaminated; or

(6) Any designated location used for the purpose of monitoring fallout from an atmospheric nuclear test conducted at the Nevada Test Site.

(g) *Participant* means an individual

(1) Who was:

(i) A member of the armed forces;

(ii) A civilian employee or contract employee of the Manhattan Engineer District, the Armed Forces Special Weapons Project, the Defense Atomic Support Agency, the Defense Nuclear Agency, or the Department of Defense or its components or agencies or predecessor components or agencies;

(iii) An employee or contract employee of the Atomic Energy Commission, the Energy Research and Development Administration, or the Department of Energy;

(iv) A member of the Federal Civil Defense Administration or the Office of Civil and Defense Mobilization; or

(v) A member of the United States Public Health Service; and

(2) Who:

(i) Performed duties within the identified operational area around each atmospheric nuclear test;

(ii) Participated in the decontamination of any ships, planes, or equipment used during the atmospheric nuclear test;

(iii) Performed duties as a cloud tracker or cloud sampler;

(iv) Served as a member of the garrison or maintenance forces on the atoll of Enewetak between June 21, 1951, and July 1, 1952; between August 7, 1956, and August 7, 1957; or between November 1, 1958, and April 30, 1959; or

(v) Performed duties as a member of a mobile radiological safety team monitoring the pattern of fallout from an atmospheric nuclear test.

(h) *Period of atmospheric nuclear testing* means any of the periods associated with each test operation specified in § 79.31(f), plus an additional six-month period thereafter.

(i) *Physically present* (or *physical presence*) means present (or presence) for a substantial period of each day.

§ 79.12 Criteria for eligibility.

To establish eligibility for compensation under this subpart, a claimant or eligible surviving beneficiary must establish each of the following:

(a)(1) That the claimant was physically present at any place within the affected area for a period of at least one year (12 consecutive or cumulative months) during the period beginning on January 21, 1951, and ending on October 31, 1958;

(2) That the claimant was physically present at any place within the affected area for the entire, continuous period beginning on June 30, 1962, and ending on July 31, 1962; or

(3) That the claimant was present onsite at any time during a period of atmospheric nuclear testing and was a participant during that period in the atmospheric detonation of a nuclear device;

(b) That after such period of physical presence or onsite participation the claimant contracted leukemia;

(c) That the claimant's initial exposure occurred prior to age 21; and

(d) The onset of the leukemia occurred more than two years after the date of the claimant's first exposure to fallout.

§ 79.13 Proof of physical presence for the requisite period and proof of participation onsite during a period of atmospheric nuclear testing.

(a) Proof of physical presence may be made by the submission of any trustworthy contemporaneous records that, on their face or in conjunction with other such records, establish that the claimant was present in the affected area for the requisite period during the designated time period. Examples of such records include:

(1) Records of the federal government (including verified information submitted for a security clearance), any tribal government, or any state, county, city or local governmental office, agency, department, board or other entity, or other public office or agency;

(2) Records of any accredited public or private educational institution;

(3) Records of any private utility licensed or otherwise approved by any governmental entity, including any such utility providing telephone services;

(4) Records of any public or private library;

(5) Records of any state or local historical society;

(6) Records of any religious organization that has tax-exempt status under section 501(c)(3) of the United States Internal Revenue Code;

(7) Records of any regularly conducted business activity or entity;

(8) Records of any recognized civic or fraternal association or organization; and

(9) Medical records created during the designated time period.

(b) Proof of physical presence by contemporaneous records may also be made by submission of original postcards and envelopes from letters (not copies) addressed to the claimant or an immediate family member during the designated time period that bear a postmark and a cancelled stamp(s).

(c) The Program will presume that an individual who resided or was employed on a full-time basis within the affected area was physically present during the time period of residence or full-time employment.

(d) For purposes of establishing eligibility under § 79.12(a)(1), the Program will presume that proof of a claimant's residence at one or more addresses or proof of full-time employment at one location within the affected area on any two dates less than three years apart during the period beginning on January 21, 1951, and ending on October 31, 1958, establishes the claimant's presence within the affected area for the period between the two dates reflected in the documentation submitted as proof of presence.

(e) For purposes of establishing eligibility under § 79.12(a)(1), the Program will presume that proof of residence at one or more addresses or proof of full-time employment at one location within the affected area on two dates, one of which is before January 21, 1951, and another of which is within the specified time period, establishes the claimant's presence in the affected area between January 21, 1951, and the date within the specified time period, provided the dates are not more than three years apart.

(f) For purposes of establishing eligibility under § 79.12(a)(1), the Program will presume that proof of residence at one or more addresses or proof of full-time employment at one location within the affected area on two dates, one of which is after October 31, 1958, and another which is within the specified time period, establishes the claimant's presence in the affected area between the date within the specified time period and October 31, 1958, provided the dates are not more than three years apart.

(g) For purposes of establishing eligibility under § 79.12(a)(2), the Program will presume that proof of residence or proof of full-time employment within the affected area at least one day during the period beginning June 30, 1962, and ending July 31, 1962, and proof of residence or proof of full-time employment at the same address within six months before June 30, 1962, and six months after July 31, 1962, establishes the claimant's

physical presence for the necessary one-month-and-one-day period.

(h) For purposes of establishing eligibility under § 79.12(a)(2), the Program will presume that proof of residence or full-time employment at the same address or location on two separate dates at least 14 days apart within the time period beginning June 30, 1962, and ending July 31, 1962, establishes the claimant's physical presence for the necessary one-month-and-one-day period.

(i) For purposes of establishing eligibility under § 79.12(a)(3), the claimant must establish, in accordance with § 79.33, that he or she participated onsite in the atmospheric detonation of a nuclear device.

§ 79.14 Proof of initial exposure prior to age 21.

(a) Proof of the claimant's date of birth must be established by the submission of any of the following:

(1) Birth certificate;

(2) Baptismal certificate;

(3) Tribal records; or

(4) Hospital records of birth.

(b) Absent any indication to the contrary, the Program will assume that the earliest date within the designated time period indicated on any records accepted by the Program as proof of the claimant's physical presence in the affected area or participation during a period of atmospheric nuclear testing was also the date of initial exposure.

§ 79.15 Proof of onset of leukemia more than two years after first exposure.

The Program will presume that the date of onset was the date of diagnosis as indicated in the medical documentation accepted by the Program as proof of the claimant's leukemia. The date of onset must be more than two years after the date of first exposure as determined under § 79.14(b).

§ 79.16 Proof of medical condition.

(a) Medical documentation is required in all cases to prove that the claimant suffered from or suffers from leukemia. Proof that the claimant contracted leukemia must be made either by using the procedure outlined in paragraph (b) of this section or submitting the documentation required in paragraph (c) of this section.

(b) If a claimant was diagnosed as having leukemia in one of the States of Arizona, Colorado, Nevada, New Mexico, Utah or Wyoming, the claimant or eligible surviving beneficiary need not submit any medical documentation of disease at the time the claim is filed (although medical documentation may subsequently be required). Instead, the claimant or eligible surviving beneficiary must submit with the claim an Authorization To Release Medical and Other Information, valid in the state of diagnosis, that authorizes the Program to contact the appropriate state cancer or tumor registry. The Program will accept as proof of medical condition verification from the state cancer or tumor registry that it possesses medical records or abstracts of medical records of the claimant that contain a verified diagnosis of one type of leukemia. If the designated state does not possess medical records or abstracts of medical records that contain a verified diagnosis of leukemia, the Radiation Exposure Compensation Program will notify the claimant or eligible surviving beneficiary and afford that individual the opportunity to submit the medical documentation required in paragraph (c) of this section, in accordance with the provisions of § 79.72(b).

(c)(1) Proof that the claimant contracted leukemia may be made by the submission of one or more of the following contemporaneous medical records provided that the specified document contains an explicit statement of diagnosis or such other information or data from which appropriate authorities at the National Cancer Institute can make a diagnosis of leukemia to a reasonable degree of medical certainty:

(i) Bone marrow biopsy or aspirate report;

(ii) Peripheral white blood cell differential count report;

(iii) Autopsy report;

(iv) Hospital discharge summary;

(v) Physician summary;

(vi) History and physical report; or

(vii) Death certificate, provided that it is signed by a physician at the time of death.

(2) If the medical record submitted does not contain sufficient information or data to make such a diagnosis, the Program will notify the claimant or eligible surviving beneficiary and afford that individual the opportunity to submit additional medical records identified in this paragraph, in accordance with the provisions of § 79.72(b). Any such additional medical documentation submitted must also contain sufficient information from which appropriate authorities at the National Cancer Institute can determine the type of leukemia contracted by the claimant.

Subpart C—Eligibility Criteria for Claims Relating to Certain Specified Diseases in an Affected Area

§ 79.20 Scope of subpart.

The regulations in this subpart describe the criteria for eligibility for compensation under sections 4(a)(2) (A) and (B) of the Act and the evidence that will be accepted as proof of the various criteria. Sections 4(a)(2) (A) and (B) of the Act provide for a payment of $50,000 to individuals who were exposed to fallout from the atmospheric detonation of nuclear devices at the Nevada Test Site due to their physical presence in an affected area during a designated time period and who later developed one or more specified compensable diseases.

§ 79.21 Definitions.

(a) The definitions listed in § 79.11 (a) through (e) and (i) apply to this subpart.

(b) *Indication of disease* means any medically significant information that suggests the presence of a disease, whether or not the presence of the disease is later confirmed.

(c) *Leukemia, lung cancer, in situ lung cancer, multiple myeloma, lymphomas, Hodgkin's disease, primary cancer of the thyroid, primary cancer of the male breast, primary cancer of the female breast, primary cancer of the esophagus, primary cancer of the stomach, primary cancer of the pharynx, primary cancer of the small intestine, primary cancer of the pancreas, primary cancer of the bile ducts, primary cancer of the gallbladder, primary cancer of the salivary gland, primary cancer of the urinary bladder, primary cancer of the brain, primary cancer of the colon, primary cancer of the ovary,* and *primary cancer of the liver* mean the physiological conditions that are recognized by the National Cancer Institute under those names or nomenclature, or under any previously accepted or commonly used names or nomenclature.

(d) *Lung cancer* means any physiological condition of the lung, trachea, or bronchus that is recognized under that name or nomenclature by the National Cancer Institute.

(e) *Specified compensable diseases* means leukemia (other than chronic lymphocytic leukemia), provided that initial exposure occurred after the age of 20 and that the onset of the disease was at least two years after first exposure, lung cancer (other than in situ lung cancer that is discovered during or after a postmortem exam), and the following diseases, provided onset was at least five years after first exposure: multiple myeloma; lymphomas (other than

Hodgkin's disease); and primary cancer of the thyroid, male or female breast, esophagus, stomach, pharynx, small intestine, pancreas, bile ducts, gallbladder, salivary gland, urinary bladder, brain, colon, ovary, or liver (except if cirrhosis or hepatitis B is indicated).

§ 79.22 Criteria for eligibility.

To establish eligibility for compensation under this subpart, a claimant or eligible surviving beneficiary must establish each of the following:

(a)(1) That the claimant was physically present at any place within the affected area for a period of at least two years (24 consecutive or cumulative months) during the period beginning on January 21, 1951, and ending on October 31, 1958; or

(2) That the claimant was physically present at any place within the affected area for the entire, continuous period beginning on June 30, 1962, and ending on July 31, 1962; and

(b) That after such period of physical presence the claimant contracted one of the following specified compensable diseases:

(1) Leukemia (other than chronic lymphocytic leukemia), provided that:

(i) The claimant's initial exposure occurred after the age of 20; and

(ii) The onset of the disease was at least two years after first exposure;

(2) Lung cancer (other than in situ lung cancer that is discovered during or after a post-mortem exam);

(3) Multiple myeloma, provided onset was at least five years after first exposure;

(4) Lymphomas, other than Hodgkin's disease, provided onset was at least five years after first exposure;

(5) Primary cancer of the thyroid, provided onset was at least five years after first exposure;

(6) Primary cancer of the male or female breast, provided onset was at least five years after first exposure;

(7) Primary cancer of the esophagus, provided onset was at least five years after first exposure;

(8) Primary cancer of the stomach, provided onset was at least five years after first exposure;

(9) Primary cancer of the pharynx, provided onset was at least five years after first exposure;

(10) Primary cancer of the small intestine, provided onset was at least five years after first exposure;

(11) Primary cancer of the pancreas, provided onset was at least five years after first exposure;

(12) Primary cancer of the bile ducts, provided onset was at least five years after first exposure;

(13) Primary cancer of the gallbladder, provided onset was at least five years after first exposure;

(14) Primary cancer of the salivary gland, provided onset was at least five years after first exposure;

(15) Primary cancer of the urinary bladder, provided onset was at least five years after first exposure;

(16) Primary cancer of the brain, provided onset was at least five years after first exposure;

(17) Primary cancer of the colon, provided onset was at least five years after first exposure;

(18) Primary cancer of the ovary, provided onset was at least five years after first exposure; or

(19) Primary cancer of the liver, provided,

(i) Onset was at least five years after first exposure;

(ii) There is no indication of the presence of hepatitis B; and

(iii) There is no indication of the presence of cirrhosis.

§ 79.23 Proof of physical presence for the requisite period.

(a) Proof of physical presence for the requisite period may be made in accordance with the provisions of § 79.13 (a) and (b). An individual who resided or was employed on a full-time basis within the affected area is presumed to have been physically present during the time period of residence or full-time employment.

(b) For purposes of establishing eligibility under § 79.22(a)(1), the Program will presume that proof of residence at one or more addresses or proof of full-time employment at one location within the affected area on any two dates less than three years apart, during the period beginning on January 21, 1951, and ending on October 31, 1958, establishes the claimant's presence within the affected area for the period between the two dates reflected in the documentation submitted as proof of presence.

(c) For purposes of establishing eligibility under § 79.22(a)(1), the Program will presume that proof of residence at one or more addresses or proof of full-time employment at one location within the affected area on two dates, one of which is before January 21, 1951, and another of which is within the specified time period, establishes the claimant's presence in the affected area between January 21, 1951, and the date within the specified time period, provided the dates are not more than three years apart.

(d) For purposes of establishing eligibility under § 79.22(a)(1), the Program will presume that proof of residence at one or more addresses or proof of full-time employment at one location within the affected area on two dates, one of which is after October 31, 1958, and another of which is within the specified time period, establishes the claimant's presence in the affected area between the date within the specified time period and October 31, 1958, provided the dates are not more than three years apart.

(e) For purposes of establishing eligibility under § 79.22(a)(2), the Program will apply the presumptions contained in § 79.13(g) and (h).

§ 79.24 Proof of initial or first exposure after age 20 for claims under § 79.22(b)(1).

(a) Proof of the claimant's date of birth must be established in accordance with the provisions of § 79.14(a).

(b) Absent any indication to the contrary, the Program will presume that the earliest date within the designated time period indicated on any records accepted by the Program as proof of the claimant's physical presence in the affected area was the date of initial or first exposure.

§ 79.25 Proof of onset of leukemia at least two years after first exposure, and proof of onset of a specified compensable disease more than five years after first exposure.

The date of onset will be the date of diagnosis as indicated in the medical documentation accepted by the Radiation Exposure Compensation Program as proof of the claimant's specified compensable disease. The date of onset must be at least five years after the date of first exposure as determined under § 79.24(b). In the case of leukemia, the date of onset must be at least two years after the date of first exposure.

§ 79.26 Proof of medical condition.

(a) Medical documentation is required in all cases to prove that the claimant suffered from or suffers from any specified compensable disease. Proof that the claimant contracted a specified compensable disease must be made either by using the procedure outlined in paragraph (b) of this section or by submitting the documentation required in paragraph (c) of this section. (For claims relating to primary cancer of the liver, the claimant or eligible surviving beneficiary must also submit the additional medical documentation prescribed in § 79.27.)

(b) If a claimant was diagnosed as having one of the specified compensable diseases in any of the States of Arizona, Colorado, Nevada, New Mexico, Utah or Wyoming, the claimant or eligible surviving beneficiary need not submit any medical documentation of disease

at the time the claim is filed (although medical documentation subsequently may be required). Instead, the claimant or eligible surviving beneficiary may submit with the claim an Authorization to Release Medical and Other Information, valid in the state of diagnosis, that authorizes the Program to contact the appropriate state cancer or tumor registry. The Program will accept as proof of medical condition verification from the state cancer or tumor registry that it possesses medical records or abstracts of medical records of the claimant that contain a verified diagnosis of one of the specified compensable diseases. If the designated state does not possess medical records or abstracts of medical records that contain a verified diagnosis of one of the specified compensable diseases, the Program will notify the claimant or eligible surviving beneficiary and afford that individual the opportunity to submit the written medical documentation required in paragraph (c) of this section, in accordance with the provisions of § 79.72(b).

(c) Proof that the claimant contracted a specified compensable disease may be made by the submission of one or more of the contemporaneous medical records listed in this paragraph, provided that the specified document contains an explicit statement of diagnosis and such other information or data from which the appropriate authorities with the National Cancer Institute can make a diagnosis to a reasonable degree of medical certainty. If the medical record submitted does not contain sufficient information or data to make such a diagnosis, the Program will notify the claimant or eligible surviving beneficiary and afford that individual the opportunity to submit additional medical records identified in this paragraph, in accordance with the provisions of § 79.72(b). The medical documentation submitted under this section to establish that the claimant contracted leukemia or a lymphoma must also contain sufficient information from which the appropriate authorities with the National Cancer Institute can determine the type of leukemia or lymphoma contracted by the claimant. Proof of leukemia shall be made by submitting one or more of the documents listed in § 79.16(c).

(1) *Multiple myeloma.*

(i) Pathology report of tissue biopsy;

(ii) Autopsy report;

(iii) Report of serum electrophoresis;

(iv) One of the following summary medical reports:

(A) Physician summary report;

(B) Hospital discharge summary report;

(C) Hematology summary or consultation report;

(D) Medical oncology summary or consultation report;

(E) X-ray report; or

(v) Death certificate, provided that it is signed by a physician at the time of death.

(2) *Lymphomas.*

(i) Pathology report of tissue biopsy;

(ii) Autopsy report;

(iii) One of the following summary medical reports:

(A) Physician summary report;

(B) Hospital discharge summary report;

(C) Hematology consultation or summary report;

(D) Medical oncology consultation or summary report; or

(iv) Death certificate, provided that it is signed by a physician at the time of death.

(3) *Primary cancer of the thyroid.*

(i) Pathology report of tissue biopsy or fine needle aspirate;

(ii) Autopsy report;

(iii) One of the following summary medical reports:

(A) Physician summary report;

(B) Hospital discharge summary;

(C) Operative summary report;

(D) Medical oncology summary or consultation report; or

(iv) Death certificate, provided that it is signed by a physician at the time of death.

(4) *Primary cancer of the male or female breast.*

(i) Pathology report of tissue biopsy or surgical resection;

(ii) Autopsy report;

(iii) One of the following summary medical reports:

(A) Physician summary report;

(B) Hospital discharge summary;

(C) Operative report;

(D) Medical oncology summary or consultation report;

(E) Radiotherapy summary or consultation report;

(iv) Report of mammogram;

(v) Report of bone scan; or

(vi) Death certificate, provided that it is signed by a physician at the time of death.

(5) *Primary cancer of the esophagus.*

(i) Pathology report of tissue biopsy or surgical resection;

(ii) Autopsy report;

(iii) Endoscopy report;

(iv) One of the following summary medical reports:

(A) Physician summary report;

(B) Hospital discharge summary report;

(C) Operative report;

(D) Radiotherapy report;

(E) Medical oncology consultation or summary report;

(v) One of the following radiological studies:

(A) Esophagram;

(B) Barium swallow;

(C) Upper gastrointestinal (GI) series;

(D) Computerized tomography (CT) scan;

(E) Magnetic resonance imaging (MRI); or

(vi) Death certificate, provided that it is signed by a physician at the time of death.

(6) *Primary cancer of the stomach.*

(i) Pathology report of tissue biopsy or surgical resection;

(ii) Autopsy report;

(iii) Endoscopy or gastroscopy report;

(iv) One of the following summary medical reports:

(A) Physician summary report;

(B) Hospital discharge summary report;

(C) Operative report;

(D) Radiotherapy report;

(E) Medical oncology summary report;

(v) One of the following radiological studies:

(A) Barium swallow;

(B) Upper gastrointestinal (GI) series;

(C) Computerized tomography (CT) series;

(D) Magnetic resonance imaging (MRI); or

(vi) Death certificate, provided that it is signed by a physician at the time of death.

(7) *Primary cancer of the pharynx.*

(i) Pathology report of tissue biopsy or surgical resection;

(ii) Autopsy report;

(iii) Endoscopy report;

(iv) One of the following summary medical reports:

(A) Physician summary;

(B) Hospital discharge summary;

(C) Report of otolaryngology examination;

(D) Radiotherapy summary report;

(E) Medical oncology summary report;

(F) Operative report;

(v) Report of one of the following radiological studies:

(A) Laryngograms;

(B) Tomograms of soft tissue and lateral radiographs;

(C) Computerized tomography (CT) scan;

(D) Magnetic resonance imaging (MRI); or

(vi) Death certificate, provided that it is signed by a physician at the time of death.

(8) *Primary cancer of the small intestine.*

(i) Pathology report of tissue biopsy;

(ii) Autopsy report;

(iii) Endoscopy report, provided that the examination covered the duodenum and parts of the jejunum;

(iv) Colonoscopy report, provided that the examination covered the distal ileum;
(v) One of the following summary medical reports:
(A) Physician summary report;
(B) Hospital discharge summary;
(C) Report of gastroenterology examination;
(D) Operative report;
(E) Radiotherapy summary report;
(F) Medical oncology summary or consultation report;
(vi) Report of one of the following radiologic studies:
(A) Upper gastrointestinal (GI) series with small bowel follow-through;
(B) Angiography;
(C) Computerized tomography (CT) scan;
(D) Magnetic resonance imaging (MRI); or
(vii) Death certificate, provided that it is signed by a physician at the time of death.
(9) *Primary cancer of the pancreas.*
(i) Pathology report of tissue biopsy or fine needle aspirate;
(ii) Autopsy report;
(iii) One of the following summary medical reports:
(A) Physician summary report;
(B) Hospital discharge summary report;
(C) Radiotherapy summary report;
(D) Medical oncology summary report;
(iv) Report of one of the following radiographic studies:
(A) Endoscopic retrograde cholangiopancreatography (ERCP);
(B) Upper gastrointestinal (GI) series;
(C) Arteriography of the pancreas;
(D) Ultrasonography;
(E) Computerized tomography (CT) scan;
(F) Magnetic resonance imaging (MRI); or
(v) Death certificate, provided that it is signed by a physician at the time of death.
(10) *Primary cancer of the bile ducts.*
(i) Pathology of tissue biopsy or surgical resection;
(ii) Autopsy report;
(iii) One of the following summary medical reports:
(A) Physician summary report;
(B) Hospital discharge summary report;
(C) Operative report;
(D) Gastroenterology consultation report;
(E) Medical oncology summary or consultation report;
(iv) Report of one of the following radiographic studies:
(A) Ultrasonography;
(B) Endoscopic retrograde cholangiography;
(C) Percutaneous cholangiography;
(D) Computerized tomography (CT) scan;
(v) Death certificate, provided that it is signed by a physician at the time of death.
(11) *Primary cancer of the gallbladder.*
(i) Pathology report of tissue from surgical resection;
(ii) Autopsy report;
(iii) Report of one of the following radiological studies:
(A) Computerized tomography (CT) scan;
(B) Magnetic resonance imaging (MRI);
(C) Ultrasonography (ultrasound);
(iv) One of the following summary medical reports:
(A) Physician summary report;
(B) Hospital discharge summary report;
(C) Operative report;
(D) Radiotherapy report;
(E) Medical oncology summary or report; or
(v) Death certificate, provided that it is signed by a physician at the time of death.
(12) *Primary cancer of the liver.*
(i) Pathology report of tissue biopsy or surgical resection;
(ii) Autopsy report;
(iii) One of the following summary medical reports:
(A) Physician summary report;
(B) Hospital discharge summary report;
(C) Medical oncology summary report;
(D) Operative report;
(E) Gastroenterology report;
(iv) Report of one of the following radiological studies:
(A) Computerized tomography (CT) scan;
(B) Magnetic resonance imaging (MRI); or
(v) Death certificate, provided that it is signed by a physician at the time of death.
(13) *Cancer of the lung.*
(i) Pathology report of tissue biopsy or resection, including, but not limited to specimens obtained by any of the following methods:
(A) Surgical resection;
(B) Endoscopic endobronchial or transbronchial biopsy;
(C) Bronchial brushings and washings;
(D) Pleural fluid cytology;
(E) Fine needle aspirate;
(F) Pleural biopsy;
(G) Sputum cytology;
(ii) Autopsy report;
(iii) Report of bronchoscopy, with or without biopsy;
(iv) One of the following summary medical reports:
(A) Physician summary report;
(B) Hospital discharge summary report;
(C) Radiotherapy summary report;
(D) Medical oncology summary report;
(E) Operative report;
(v) Report of one of the following radiology examinations:
(A) Computerized tomography (CT) scan;
(B) Magnetic resonance imaging (MRI);
(C) X-rays of the chest;
(D) Chest tomograms; or
(vi) Death certificate, provided that it is signed by a physician at the time of death.
(14) *Primary cancer of the salivary gland.*
(i) Pathology report of tissue biopsy or resection;
(ii) Autopsy report;
(iii) Report of otolaryngology or oral maxillofacial examination;
(iv) One of the following summary medical reports:
(A) Physician summary report;
(B) Hospital discharge summary report;
(C) Radiotherapy summary report;
(D) Medical oncology summary report;
(E) Operative report;
(v) Report of one of the following radiology examinations:
(A) Computerized tomography (CT) scan;
(B) Magnetic resonance imaging (MRI); or
(vi) Death certificate, provided that it is signed by a physician at the time of death.
(15) *Primary cancer of the urinary bladder.*
(i) Pathology report of tissue biopsy or resection;
(ii) Autopsy report;
(iii) Report of cytoscopy, with or without biopsy;
(iv) One of the following summary medical reports:
(A) Physician summary report;
(B) Hospital discharge summary report;
(C) Radiotherapy summary report;
(D) Medical oncology summary report;
(E) Operative report;
(v) Report of one of the following radiology examinations:
(A) Computerized tomography (CT) scan;
(B) Magnetic resonance imaging (MRI); or
(vi) Death certificate, provided that it is signed by a physician at the time of death.
(16) *Primary cancer of the brain.*

(i) Pathology report of tissue biopsy or resection;
(ii) Autopsy report;
(iii) One of the following summary medical reports:
(A) Physician summary report;
(B) Hospital discharge summary report;
(C) Radiotherapy summary report;
(D) Medical oncology summary report;
(E) Operative report;
(iv) Report of one of the following radiology examinations:
(A) Computerized tomography (CT) scan;
(B) Magnetic resonance imaging (MRI);
(C) CT or MRI with enhancement; or
(v) Death certificate, provided that it is signed by a physician at the time of death.

(17) *Primary cancer of the colon.*
(i) Pathology report of tissue biopsy;
(ii) Autopsy report;
(iii) Endoscopy report, provided the examination covered the duodenum and parts of the jejunum;
(iv) Colonoscopy report, provided that the examination covered the distal ileum;
(v) One of the following summary medical reports:
(A) Physician summary report;
(B) Hospital discharge summary;
(C) Report of gastroenterology examination;
(D) Operative report;
(E) Radiotherapy summary report;
(F) Medical oncology summary or consultation report;
(vi) Report of one of the following radiologic studies:
(A) Upper gastrointestinal (GI) series with small bowel follow-through;
(B) Angiography;
(C) Computerized tomography (CT) scan;
(D) Magnetic resonance imaging (MRI); or
(vii) Death certificate, provided that it is signed by a physician at the time of death.

(18) *Primary cancer of the ovary.*
(i) Pathology report of tissue biopsy or resection;
(ii) Autopsy report;
(iii) One of the following summary medical reports:
(A) Physician summary report;
(B) Hospital discharge summary report;
(C) Radiotherapy summary report;
(D) Medical oncology summary report;
(E) Operative report; or
(iv) Death certificate, provided that it is signed by a physician at the time of death.

§ 79.27 Indication of the presence of hepatitis B or cirrhosis.

(a)(1) If the claimant or eligible surviving beneficiary is claiming eligibility under this subpart for primary cancer of the liver, the claimant or eligible surviving beneficiary must submit, in addition to proof of the disease, all medical records listed below from any hospital, medical facility, or health care provider that were created within the period six months before and six months after the date of diagnosis of primary cancer of the liver:
(i) All history and physical examination reports;
(ii) All operative and consultation reports;
(iii) All pathology reports; and
(iv) All physician, hospital, and health care facility admission and discharge summaries.

(2) In the event that any of the records in paragraph (a)(1) of this section no longer exists, the claimant or eligible surviving beneficiary must submit a certified statement by the custodian(s) of those records to that effect.

(b) If the medical records listed in paragraph (a) of this section, or information possessed by the state cancer or tumor registries, indicates the presence of hepatitis B or cirrhosis, the Radiation Exposure Compensation Program will notify the claimant or eligible surviving beneficiary and afford that individual the opportunity to submit other written medical documentation or contemporaneous records in accordance with § 79.72(b) to establish that in fact there was no hepatitis B or cirrhosis.

(c) The Program may also require that the claimant or eligible surviving beneficiary provide additional medical records or other contemporaneous records, or an authorization to release such additional medical and contemporaneous records, as may be needed to make a determination regarding the indication of the presence of hepatitis B or cirrhosis.

Subpart D—Eligibility Criteria for Claims by Onsite Participants

§ 79.30 Scope of subpart.

The regulations in this subpart describe the criteria for eligibility for compensation under section 4(a)(2)(C) of the Act, and the evidence that will be accepted as proof of the various criteria. Section 4(a)(2)(C) of the Act provides for a payment of $75,000 to individuals who participated onsite in the atmospheric detonation of a nuclear device and later developed a specified compensable disease.

§ 79.31 Definitions.

(a) The definitions listed in § 79.11(b), (e), (f), (g), and (h), and in § 79.21, apply to this subpart.

(b) *Atmospheric detonation of a nuclear device* means only a test conducted by the United States prior to January 1, 1963, as listed in paragraph (d) of this section.

(c) *First exposure* or *initial exposure* means the date on which the claimant first participated onsite in an atmospheric nuclear test.

(d) *Period of atmospheric nuclear testing* means one of the periods listed in this paragraph that are associated with each test operation, plus an additional six-month period thereafter:

(1) For Operation Trinity, the period July 16, 1945, through August 6, 1945:

Event name	Date	Location
Trinity	07/16/45	Trinity Test Site.

(2) For Operation Crossroads, the period June 28, 1946, through August 31, 1946, for all activities other than the decontamination of ships involved in Operation Crossroads; the period of atmospheric nuclear testing for the decontamination of ships involved in Operation Crossroads shall run from June 28, 1946, through November 30, 1946:

Event name	Date	Location
Able	07/01/46	Bikini.
Baker	07/25/46	Bikini.

(3) For Operation Sandstone, the period April 13, 1948, through May 20, 1948:

Event name	Date	Location
X-ray	04/15/48	Enewetak.
Yoke	05/01/48	Enewetak.
Zebra	05/15/48	Enewetak.

(4) For Operation Ranger, the period January 27, 1951, through February 7, 1951:

Event name	Date	Location
Able	01/27/51	Nevada Test Site ("NTS").
Baker	01/28/51	NTS.
Easy	02/01/51	NTS.
Baker-2	02/02/51	NTS.
Fox	02/06/51	NTS.

(5) For Operation Greenhouse, the period April 5, 1951, through June 20, 1951, for all activities other than service as a member of the garrison or maintenance forces on the atoll of Enewetak between June 21, 1951, and July 1, 1952; the period of atmospheric

nuclear testing for service as a member of the garrison or maintenance forces on the atoll of Enewetak shall run from April 5, 1951, through July 1, 1952:

Event name	Date	Location
Dog	04/08/51	Enewetak.
Easy	04/21/51	Enewetak.
George	05/09/51	Enewetak.
Item	05/25/51	Enewetak.

(6) For Operation Buster-Jangle, the period October 22, 1951, through December 20, 1951:

Event name	Date	Location
Able	10/22/51	NTS.
Baker	10/28/51	NTS.
Charlie	10/30/51	NTS.
Dog	11/01/51	NTS.
Sugar	11/19/51	NTS.
Uncle	11/29/51	NTS.

(7) For Operation Tumbler-Snapper, the period April 1, 1952, through June 20, 1952:

Event name	Date	Location
Able	04/01/52	NTS.
Baker	04/15/52	NTS.
Charlie	04/22/52	NTS.
Dog	05/01/52	NTS.
Easy	05/07/52	NTS.
Fox	05/25/52	NTS.
George	06/01/52	NTS.

(8) For Operation Ivy, the period October 29, 1952, through December 31, 1952:

Event name	Date	Location
Mike	11/01/52	Enewetak.
King	11/16/52	Enewetak.

(9) For Operation Upshot-Knothole, the period March 17, 1953, through June 20, 1953:

Event name	Date	Location
Annie	03/17/53	NTS.
Nancy	03/24/53	NTS.
Ruth	03/31/53	NTS.
Dixie	04/06/53	NTS.
Ray	04/11/53	NTS.
Badger	04/18/53	NTS.
Simon	04/25/53	NTS.
Encore	05/08/53	NTS.
Harry	05/19/53	NTS.
Grable	05/25/53	NTS.
Climax	06/04/53	NTS.

(10) For Operation Castle, the period February 27, 1954, through May 31, 1954:

Event name	Date	Location
Bravo	03/01/54	Bikini.
Romeo	03/27/54	Bikini.
Koon	04/07/54	Bikini.
Union	04/26/54	Bikini.
Yankee	05/05/54	Bikini.
Nectar	05/14/54	Enewetak.

(11) For Operation Teapot, the period February 18, 1955, through June 10, 1955:

Event name	Date	Location
Wasp	02/18/55	NTS.
Moth	02/22/55	NTS.
Tesla	03/01/55	NTS.
Turk	03/07/55	NTS.
Hornet	03/12/55	NTS.
Bee	03/22/55	NTS.
Ess	03/23/55	NTS.
Apple-1	03/29/55	NTS.
Wasp Prime	03/29/55	NTS.
Ha	04/06/55	NTS.
Post	04/09/55	NTS.
Met	04/15/55	NTS.
Apple-2	05/05/55	NTS.
Zucchini	05/15/55	NTS.

(12) For Operation Wigwam, the period May 14, 1955, through May 15, 1955:

Event name	Date	Location
Wigwam	05/14/55	Pacific.

(13) For Operation Redwing, the period May 2, 1956, through August 6, 1956, for all activities other than service as a member of the garrison or maintenance forces on the atoll of Enewetak from August 7, 1956, through August 7, 1957; the period of atmospheric nuclear testing for service as a member of the garrison or maintenance forces on the atoll of Enewetak shall run from May 2, 1956, through August 7, 1957:

Event name	Date	Location
Lacrosse	05/05/56	Enewetak.
Cherokee	05/21/56	Bikini.
Zuni	05/28/56	Bikini.
Yuma	05/28/56	Enewetak.
Erie	05/31/56	Enewetak.
Seminole	06/06/56	Enewetak.
Flathead	06/12/56	Bikini.
Blackfoot	06/12/56	Enewetak.
Kickapoo	06/14/56	Enewetak.
Osage	06/16/56	Enewetak.
Inca	06/22/56	Enewetak.
Dakota	06/26/56	Bikini.
Mohawk	07/03/56	Enewetak.
Apache	07/09/56	Enewetak.
Navajo	07/11/56	Bikini.
Tewa	07/21/56	Bikini.
Huron	07/22/56	Enewetak.

(14) For Operation Plumbbob, the period May 28, 1957, through October 22, 1957:

Event name	Date	Location
Boltzmann	05/28/57	NTS.
Franklin	06/02/57	NTS.
Lassen	06/05/57	NTS.
Wilson	06/18/57	NTS.
Priscilla	06/24/57	NTS.
Hood	07/05/57	NTS.
Diablo	07/15/57	NTS.
John	07/19/57	NTS.
Kepler	07/24/57	NTS.
Owens	07/25/57	NTS.
Stokes	08/07/57	NTS.
Shasta	08/18/57	NTS.
Doppler	08/23/57	NTS.
Franklin Prime.	08/30/57	NTS.
Smoky	08/31/57	NTS.
Galileo	09/02/57	NTS.
Wheeler	09/06/57	NTS.
Laplace	09/08/57	NTS.
Fizeau	09/14/57	NTS.
Newton	09/16/57	NTS.
Whitney	09/23/57	NTS.
Charleston	09/28/57	NTS.
Morgan	10/07/57	NTS.

(15) For Operation Hardtack I, the period April 26, 1958, through October 31, 1958, for all activities other than service as a member of the garrison or maintenance forces on the atoll of Enewetak from November 1, 1958, through April 30, 1959; the period of atmospheric nuclear testing for service as a member of the garrison of maintenance forces on the atoll of Enewetak shall run from April 26, 1958, through April 30, 1959:

Event name	Date	Location
Yucca	04/28/58	Pacific.
Cactus	05/06/58	Enewetak.
Fir	05/12/58	Bikini.
Butternut	05/12/58	Enewetak.
Koa	05/13/58	Enewetak.
Wahoo	05/16/58	Enewetak.
Holly	05/21/58	Enewetak.
Nutmeg	05/22/58	Bikini.
Yellowwood	05/26/58	Enewetak.
Magnolia	05/27/58	Enewetak.
Tobacco	05/30/58	Enewetak.
Sycamore	05/31/58	Bikini.
Rose	06/03/58	Enewetak.
Umbrella	06/09/58	Enewetak.
Maple	06/11/58	Bikini.
Aspen	06/15/58	Bikini.
Walnut	06/15/58	Enewetak.
Linden	06/18/58	Enewetak.
Redwood	06/28/58	Bikini.
Elder	06/28/58	Enewetak.
Oak	06/29/58	Enewetak.
Hickory	06/29/58	Bikini.
Sequoia	07/02/58	Enewetak.
Cedar	07/03/58	Bikini.
Dogwood	07/06/58	Enewetak.
Poplar	07/12/58	Bikini.
Scaevola	07/14/58	Enewetak.
Pisonia	07/18/58	Enewetak.
Juniper	07/22/58	Bikini.
Olive	07/23/58	Enewetak.
Pine	07/27/58	Enewetak.
Teak	07/31/58	Johnston Isl.
Qunice	08/06/58	Enewetak.

Event name	Date	Location
Orange	08/11/58	Johnston Isl.
Fig	08/18/58	Enewetak.

(16) For Operation Argus, the period August 25, 1958, through September 10, 1958:

Event name	Date	Location
Argus I	08/27/58	South Atlantic.
Argus II	08/30/58	South Atlantic.
Argus III	09/06/58	South Atlantic.

(17) For Operation Hardtack II, the period September 19, 1958, through October 31, 1958:

Event name	Date	Location
Eddy	09/19/58	NTS.
Mora	09/29/58	NTS.
Quay	10/10/58	NTS.
Lea	10/13/58	NTS.
Hamilton	10/15/58	NTS.
Dona Ana	10/16/58	NTS.
Rio Arriba	10/18/58	NTS.
Socorro	10/22/58	NTS.
Wrangell	10/22/58	NTS.
Rushmore	10/22/58	NTS
Sanford	10/26/58	NTS.
De Baca	10/26/58	NTS.
Humboldt	10/29/58	NTS
Mazama	10/29/58	NTS.
Santa Fe	10/30/58	NTS.

(18) For Operation Dominic I, the period April 23, 1962, through December 31, 1962:

Event name	Date	Location
Adobe	04/25/62	Christmas Isl.
Aztec	04/27/62	Christmas Isl.
Arkansas	05/02/62	Christmas Isl.
Questa	05/04/62	Christmas Isl.
Frigate Bird	05/06/62	Pacific.
Yukon	05/08/62	Christmas Isl.
Mesilla	05/09/62	Christmas Isl.
Muskegon	05/11/62	Christmas Isl.
Swordfish	05/11/62	Pacific.
Encino	05/12/62	Christmas Isl.
Swanee	05/14/62	Christmas Isl.
Chetco	05/19/62	Christmas Isl.
Tanana	05/25/62	Christmas Isl.
Nambe	05/27/62	Christmas Isl.
Alma	06/08/62	Christmas Isl.
Truckee	06/09/62	Christmas Isl.
Yeso	06/10/62	Christmas Isl.
Harlem	06/12/62	Christmas Isl
Rinconada	06/15/62	Christmas Isl.
Dulce	06/17/62	Christmas Isl.
Petit	06/19/62	Christmas Isl.
Otowi	06/22/62	Christmas Isl.
Bighorn	06/27/62	Christmas Isl.
Bluestone	06/30/62	Christmas Isl.
Starfish	07/08/62	Johnston Isl.
Sunset	07/10/62	Christmas Isl.
Pamlico	07/11/62	Christmas Isl.
Androscoggin	10/02/62	Johnston Isl.
Bumping	10/06/62	Johnston Isl.
Chama	10/18/62	Johnston Isl.
Checkmate	10/19/62	Johnston Isl.
Bluegill	10/25/62	Johnston Isl.
Calamity	10/27/62	Johnston Isl.
Housatonic	10/30/62	Johnston Isl.
Kingfish	11/01/62	Johnston Isl.
Tightrope	11/03/62	Johnston Isl.

(19) For Operation Dominic II, the period July 7, 1962, through August 15, 1962:

Event name	Date	Location
Little Feller II	07/07/62	NTS.
Johnie Boy	07/11/62	NTS.
Small Boy	07/14/62	NTS.
Little Feller I	07/17/62	NTS.

(20) For Operation Plowshare, the period July 6, 1962, through July 7, 1962, covering Project Sedan.

§ 79.32 Criteria for eligibility.

To establish eligibility for compensation under this subpart, a claimant or eligible surviving beneficiary must establish each of the following:

(a) That the claimant was present onsite at any time during a period of atmospheric nuclear testing;

(b) That the claimant was a participant during that period in the atmospheric detonation of a nuclear device; and

(c) That after such participation, the claimant contracted a specified compensable disease as set forth in § 79.22(b).

§ 79.33 Proof of participation onsite during a period of atmospheric nuclear testing.

(a) *Claimants associated with the Department of Defense (DoD) Components or DoD contractors.* (1) A claimant or eligible surviving beneficiary who alleges that the claimant was present onsite during a period of atmospheric nuclear testing as a member of the armed forces or an employee or contractor employee of the DoD, or any of its components or agencies, must submit the following information on the claim form:

(i) The claimant's name;

(ii) The claimant's military service number;

(iii) The claimant's social security number;

(iv) The site at which the claimant participated in an atmospheric nuclear test;

(v) The name or number of the claimant's military organization or unit assignment at the time of his or her onsite participation;

(vi) The dates of the claimant's assignment onsite; and

(vii) As full and complete a description as possible of the claimant's official duties, responsibilities, and activities while participating onsite.

(2) A claimant or eligible surviving beneficiary under this section need not submit any additional documentation of onsite participation during an atmospheric nuclear test at the time the claim is filed; however, additional documentation may be required as set forth in paragraph (a)(3) of this section.

(3) Upon receipt under this subpart of a claim that contains the information set forth in paragraph (a)(1) of this section, the Radiation Exposure Compensation Program will forward the information to the DoD and request that the DoD conduct a search of its records for the purpose of gathering facts relating to the claimant's presence onsite and participation in an atmospheric nuclear test. If the facts gathered by the DoD are insufficient to establish the eligibility criteria in § 79.32 of these regulations, the claimant or eligible surviving beneficiary will be notified and afforded the opportunity to submit military, government, or business records in accordance with the procedure set forth in § 79.72(c).

(b) *Claimants Associated with the Atomic Energy Commission (AEC) or the Department of Energy (DOE), or Who Were Members of the Federal Civil Defense Administration or the Office of Civil and Defense Mobilization.* (1) A claimant or eligible surviving beneficiary who alleges that the claimant was present onsite during an atmospheric nuclear test as an employee of the AEC, the DOE or any of their components, agencies or offices, or as an employee of a contractor of the AEC, or DOE, or as a member of the Federal Civil Defense or the Office of Civil and Defense Mobilization, must submit the following information on the claim form:

(i) The claimant's name;

(ii) The claimant's social security number;

(iii) The site at which the claimant participated in an atmospheric nuclear test;

(iv) The name or other identifying information associated with the claimant's organization, unit, assignment, or employer at the time of the claimant's participation onsite;

(v) The dates of the claimant's assignment onsite; and

(vi) As full and complete a description as possible of the claimant's official duties, responsibilities, and activities while participating onsite.

(2) A claimant or eligible surviving beneficiary under this section need not at the time the claim is filed submit any additional documentation demonstrating the claimant's presence

onsite during an atmospheric nuclear test; however, additional documentation may be thereafter be required as set forth in paragraph (b)(3) of this section.

(3) Upon receipt under this subpart of a claim that contains the information set forth in paragraph (b)(1) of this section, the Radiation Exposure Compensation Program will forward the information to the Nevada Field Office of the Department of Energy (DOE/NV) and request that the DOE conduct a search of its records for the purpose of gathering facts relating to the claimant's presence onsite and participation in an atmospheric nuclear test. If the facts gathered by the DOE/NV are insufficient to establish the eligibility criteria in § 79.32 of these regulations, the claimant or eligible surviving beneficiary will be notified and afforded the opportunity to submit military, government, or business records in accordance with the procedure set forth in § 79.72(c).

§ 79.34 Proof of medical condition.

Proof of medical condition under this subpart will be made in the same manner, and according to the same procedures and limitations, as are set forth in § 79.16 and § 79.26.

§ 79.35 Proof of onset of leukemia at least two years after first exposure, and proof of onset of a specified compensable disease more than five years after first exposure.

Absent any indication to the contrary, the earliest date of onsite participation indicated on any records accepted by the Radiation Exposure Compensation Program as proof of the claimant's onsite participation will be presumed to be the date of first or initial exposure. The date of onset will be the date of diagnosis as indicated on the medical documentation accepted by the Radiation Exposure Compensation Program as proof of the specified compensable disease. Proof of the onset of leukemia shall be established in accordance with § 79.15.

§ 79.36 Indication of the presence of hepatitis B or cirrhosis.

Possible indication of hepatitis B or cirrhosis will be determined in accordance with the provisions of § 79.27.

Subparts E–G [Reserved]

Subpart H—Procedures

§ 79.70 Attorney General's delegation of authority.

(a) An Assistant Director within the Constitutional and Specialized Tort Staff, Torts Branch, Civil Division, shall be assigned to manage the Radiation Exposure Compensation Program and issue a decision on each claim filed under the Act, and otherwise act on behalf of the Attorney General in all other matters relating to the administration of the Program, except for rulemaking authority. The Assistant Director may delegate any of his or her responsibilities under these regulations to an attorney working under the supervision of the Assistant Director.

(b) The Assistant Attorney General, Civil Division, or the official designated by him to act on his behalf (the Appeals Officer), shall act on appeals from the Assistant Director's decisions.

§ 79.71 Filing of claims.

(a) All claims for compensation under the Act must be in writing and submitted on a standard form designated by the Assistant Director for the filing of compensation claims. Except as specifically provided in these regulations, the claimant or eligible surviving beneficiary must furnish the medical documentation required by these regulations with his or her standard form. Except as specifically provided in these regulations, the claimant or eligible surviving beneficiary must also provide with the standard form any records establishing his or her physical presence in an affected area, onsite participation, employment in a uranium mine or mill, or employment as an ore transporter, in accordance with these regulations. The standard form must be completed, signed under oath either by a person eligible to file a claim under the Act or by that person's legal guardian, and mailed with supporting documentation to the following address: Radiation Exposure Compensation Program, U.S. Department of Justice, P.O. Box 146, Ben Franklin Station, Washington, DC 20044–0146. Copies of the standard form, as well as the regulations, guidelines, and other information, may be obtained by requesting the document or publications from the Assistant Director at the address indicated above or by accessing the Program's website at *www.usdoj.gov/reca.*

(b) The Assistant Director will file a claim after receipt of the standard form with supporting documentation and examination for substantial compliance with these regulations. The date of filing shall be recorded by a stamp on the face of the standard form. The Assistant Director shall file only claims that substantially comply with § 79.71(a) of these regulations. If a claim substantially fails to comply with the aforementioned section, the Assistant Director shall promptly return the claim unfiled to the sender with a statement identifying the reason(s) why the claim does not comply with the regulations. The sender may return the claim to the Assistant Director after correcting the deficiencies. For those cases that are filed, the Assistant Director shall promptly acknowledge receipt of the claim with a letter identifying the number assigned to the claim, the date the claim was filed, and the period within which the Assistant Director must act on the claim.

(c) The following persons or their legal guardians are eligible to file claims for compensation under the Act in the order listed below:

(1) The claimant;

(2) If the claimant is deceased, the spouse of the claimant;

(3) If there is no surviving spouse, a child of the claimant;

(4) If there is no surviving spouse or child, a parent of the claimant;

(5) If there is no surviving spouse, child or parent, a grandchild of the claimant; or

(6) If there is no surviving spouse, child, parent or grandchild, a grandparent of the claimant.

(7) Only the above-mentioned beneficiaries are eligible to file a claim on behalf of the claimant.

(d) The identity of the claimant must be established by submitting a birth certificate or one of the documents identified in § 79.14(a) of these regulations when the person has no birth certificate. Additionally, documentation demonstrating any and all name changes must be provided.

(e) (1) The spouse of a claimant must establish his or her eligibility to file a claim by furnishing:

(i) His or her birth certificate and, if applicable, documentation demonstrating any and all name changes;

(ii) The birth and death certificates of the claimant;

(iii) One of the following documents to establish a marriage to the claimant:

(A) The public record of marriage;

(B) A certificate of marriage;

(C) The religious record of marriage; or

(D) A judicial or other governmental determination that a valid marriage existed, such as the final opinion or order of a probate court or a determination of the Social Security Administration that the claimant is the spouse of the decedent;

(iv) A death certificate or divorce decree for each spouse of the claimant (if applicable); and

(v) An affidavit (or declaration under oath on the standard claim form) stating that the spouse was married to the claimant for at least one year

immediately prior to the claimant's death.

(2) If the spouse is a member of an Indian Tribe, he or she need not provide any of the documents listed in paragraph (e)(1) of this section at the time the claim is filed (although these records may later be required), but should instead furnish a signed release of private information that the Assistant Director will use to obtain a statement of verification of all of the information listed above directly from the tribal records custodian. In identifying those individuals eligible to receive compensation by virtue of marriage, relationship, or survivorship, the Assistant Director shall, to the maximum extent practicable, take into consideration and give effect to established law, tradition, and custom of the particular affected Indian tribe.

(f)(1) A child of a claimant must establish his or her eligibility to file a claim by furnishing:

(i) His or her birth certificate and, if applicable, documentation demonstrating any and all name changes;

(ii) The birth and death certificates of the claimant;

(iii) One of the documents listed in paragraph (e)(3) of this section to establish each marriage to the claimant (if applicable);

(iv) A death certificate or divorce decree for each spouse of the claimant (if applicable);

(v) A death certificate for each of the other children of the claimant (if applicable);

(vi) An affidavit (or declaration under oath on the standard claim form) stating the following:

(A) That the claimant was never married, or, if the claimant was ever married, the name of each spouse, the date each marriage began and ended, and the date and place of divorce or death of the last spouse of the claimant; and

(B) That the claimant had no other children, or, if the claimant did have other children, the name of each child, the date and place of birth of each child, and the date and place of death or current address of each child; and

(vii) One of the following:

(A) In the case of a natural child, a birth certificate showing that the claimant was the child's parent, or a judicial decree identifying the claimant as the child's parent;

(B) In the case of an adopted child, the judicial decree of adoption; or

(C) In the case of a stepchild, evidence of birth to the spouse of the claimant as outlined above, and records reflecting that the stepchild lived with the claimant in a regular parent-child relationship.

(2) If the child is a member of an Indian Tribe, he or she need not provide any of the documents listed above in paragraph (f)(1) of this section at the time the claim is filed (although these records may later be required), but should instead furnish a signed release of private information that the Assistant Director will use to obtain a statement of verification of all of the information listed above directly from the tribal records custodian. In identifying those individuals eligible to receive compensation by virtue of survivorship, the Assistant Director shall, to the maximum extent practicable, take into consideration and give effect to established law, tradition, and custom of the particular affected Indian tribe.

(g)(1) A parent of a claimant must establish his or her eligibility to file a claim by furnishing:

(i) His or her birth certificate and, if applicable, documentation demonstrating any and all name changes;

(ii) The birth and death certificates of the claimant;

(iii) One of the documents listed in paragraph (e)(3) of this section to establish each marriage to the claimant (if applicable);

(iv) A death certificate or divorce decree for each spouse of the claimant (if applicable);

(v) A death certificate for each child of the claimant (if applicable);

(vi) A death certificate for the other parent(s) (if applicable);

(vii) An affidavit (or declaration under oath on the standard claim form) stating the following:

(A) That the claimant was never married, or, if the claimant was ever married, the name of each spouse, the date each marriage began and ended, and the date and place of divorce or death of the last spouse of the claimant;

(B) That the claimant had no children, or, if the claimant did have children, the name of each child, the date and place of birth of each child, and the date and place of death of each child; and

(C) The name and address, or date and place of death, of the other parent(s) of the claimant; and

(viii) One of the following:

(A) In the case of a natural parent, a birth certificate showing that the claimant was the parent's child, or a judicial decree identifying the claimant as the parent's child; or

(B) In the case of an adoptive parent, the judicial decree of adoption.

(2) If the parent is a member of an Indian Tribe, he or she need not provide any of the documents listed in paragraph (g)(1) of this section at the time the claim is filed (although these records may later be required), but should instead furnish a signed release of private information that the Assistant Director will use to obtain a statement of verification of all of the information listed above directly from the tribal records custodian. In identifying those individuals eligible to receive compensation by virtue of survivorship, the Assistant Director shall, to the maximum extent practicable, take into consideration and give effect to established law, tradition, and custom of the particular affected Indian tribe.

(h)(1) A grandchild of a claimant must establish his or her eligibility to file a claim by furnishing:

(i) His or her birth certificate and, if applicable, documentation demonstrating any and all name changes;

(ii) The birth and death certificates of the claimant;

(iii) One of the documents listed in paragraph (e)(1)(iii) of this section to establish each marriage to the claimant (if applicable);

(iv) A death certificate or divorce decree for each spouse of the claimant (if applicable);

(v) A death certificate for each child of the claimant;

(vi) A death certificate for each parent of the claimant;

(vii) A death certificate for each of the other grandchildren of the claimant (if applicable);

(viii) An affidavit (or declaration under oath on the standard claim form) stating the following:

(A) That the claimant was never married, or, if the claimant was ever married, the name of each spouse, the date each marriage began and ended, and the date and place of divorce or death of the last spouse of the claimant;

(B) The name of each child, the date and place of birth of each child, and the date and place of death of each child;

(C) The names of each parent of the claimant together with the dates and places of death of each parent; and

(D) That the claimant had no other grandchildren, or, if the claimant did have other grandchildren, the name of each grandchild, the date and place of birth of each grandchild, and the date and place of death or current address of each child; and

(ix) One of the following:

(A) In the case of a natural grandchild, a combination of birth certificates showing that the claimant was the grandchild's grandparent;

(B) In the case of an adopted grandchild, a combination of judicial records and birth certificates showing

that the claimant was the grandchild's grandparent; or

(C) In the case of a stepgrandchild, evidence of birth to the spouse of the child of the claimant, as outlined above, and records reflecting that the stepchild lived with a child of the claimant in a regular parent-child relationship.

(2) If the grandchild is a member of an Indian Tribe, he or she need not provide any of the documents listed above in paragraph (h)(1) of this section at the time the claim is filed (although these records may later be required), but should instead furnish a signed release of private information that the Assistant Director will use to obtain a statement of verification of all of the information listed above directly from the tribal records custodian. In identifying those individuals eligible to receive compensation by virtue of survivorship, the Assistant Director shall, to the maximum extent practicable, take into consideration and give effect to established law, tradition, and custom of the particular affected Indian tribe.

(i)(1) A grandparent of the claimant must establish his or her eligibility to file a claim by furnishing:

(i) His or her birth certificate and, if applicable, documentation demonstrating any and all name changes;

(ii) The birth and death certificates of the claimant,

(iii) One of the documents listed in paragraph (e)(3) of this section to establish each marriage to the claimant (if applicable);

(iv) A death certificate or divorce decree for each spouse of the claimant (if applicable);

(v) A death certificate for each child of the claimant (if applicable);

(vi) A death certificate for each parent of the claimant;

(vii) A death certificate for each grandchild of the claimant (if applicable);

(viii) A death certificate for each of the other grandparents of the claimant (if applicable);

(ix) An affidavit stating the following:

(A) That the claimant was never married, or if the claimant was ever married, the name of each spouse, the date each marriage began and ended, and the date and place of divorce or death of the last spouse of the claimant;

(B) That the claimant had no children, or, if the claimant did have children, the name of each child, the date and place of birth of each child, and the date and place of death of each child;

(C) The names of each parent of the claimant together with the dates and places of death of each parent;

(D) That the claimant had no grandchildren, or, if the claimant did have grandchildren, the name of each grandchild, the date and place of birth of each grandchild, and the date and place of death of each grandchild; and

(E) The names of all other grandparents of the claimant together with the dates and places of birth of each grandparent, and the dates and places of death of each other grandparent or the current address of each other grandparent; and

(x) One of the following:

(A) In the case of a natural grandparent, a combination of birth certificates showing that the claimant was the grandparent's grandchild;

(B) In the case of an adoptive grandparent, a combination of judicial records showing that the claimant was the grandparent's grandchild.

(2) If the grandparent is a member of an Indian Tribe, he or she need not provide any of the documents listed above in paragraph (i)(1) of this section at the time the claim is filed (although these records may later be required), but should instead furnish a signed release of private information that the Assistant Director will use to obtain a statement of verification of all of the information listed above directly from the tribal records custodian. In identifying those individuals eligible to receive compensation by virtue of survivorship, the Assistant Director shall, to the maximum extent practicable, take into consideration and give effect to established law, tradition, and custom of the particular affected Indian tribe.

(j) A claim that was filed and denied may be filed again in those cases where the claimant or eligible surviving beneficiary obtains documentation that he or she did not possess when the claim was filed previously and that redresses the deficiency for which the claim was denied, including, where applicable, documentation addressing:

(1) An injury specified in the Act;

(2) Residency in the affected area;

(3) Onsite participation in a nuclear test;

(4) Exposure to 40 WLMs of radiation while employed in a uranium mine or mines during the designated time period;

(5) Employment for one year (12 consecutive or cumulative months) as a miller or ore transporter; or

(6) The identity of the claimant and/or the eligible surviving beneficiary.

(k) A claimant or eligible surviving beneficiary may not refile a claim more than two times. Claims filed prior to July 10, 2000, will not be included in determining the number of claims filed.

§ 79.72 Review and resolution of claims.

(a) *Initial review.* The Assistant Director shall conduct an initial review of each claim that has been filed to determine whether:

(1) The person submitting the claim represents that he or she is an eligible surviving beneficiary, in those cases where the claimant is deceased;

(2) The medical condition identified in the claim is a disease specified in the Act for which the claimant or eligible surviving beneficiary could recover compensation;

(3) For claims submitted under subparts B and C of this part, the period or place of physical presence set forth in the claim falls within the designated time period or affected areas identified in § 79.11;

(4) For claims submitted under subparts B and D of this part, the place and period of onsite participation set forth in the claim falls within the places and times set forth in § 79.11 and § 79.31; and

(5) For claims submitted under subparts E, F, and G of this part, the period or place of uranium mining, mill working or ore transporting set forth in the claim falls within the designated time period and specified states identified in §§ 79.42, 79.52, and 79.62.

If the Assistant Director determines from the initial review that any one of the applicable criteria is not met, or that any other criterion of the regulations is not met, the Assistant Director shall so advise the claimant or eligible surviving beneficiary in writing, setting forth the reasons for the determination, and allow the claimant or eligible surviving beneficiary 60 days from the date of such notification to correct any deficiency in the claim. If the claimant or eligible surviving beneficiary fails adequately to correct the deficiencies within the 60-day period, the Assistant Director shall, without further review, issue a Decision denying the claim.

(b) *Review of medical documentation.* The Assistant Director will examine the medical documentation submitted in support of the claim and determine whether it satisfies the criteria for eligibility established by the Act and these regulations. The Assistant Director may, for the purpose of verifying eligibility, require the claimant or eligible surviving beneficiary to provide an authorization to release any medical record identified in these regulations. If the Assistant Director determines that the documentation does not satisfy the criteria for eligibility established by the Act and these regulations, the Assistant Director shall so advise the claimant or eligible surviving beneficiary in writing, setting forth the reason(s) for the determination, and shall allow the claimant or eligible beneficiary 60 days from the date of notification, or such

greater period as the Assistant Director permits, to furnish additional medical documentation that meets the requirements of the Act and the regulations. Where appropriate, the Assistant Director may require the claimant or eligible surviving beneficiary to provide an authorization to release additional records. If the claimant or eligible beneficiary fails, within 60 days or the greater period approved by the Assistant Director, to provide sufficient medical documentation or a valid release when requested by the Assistant Director, then the Assistant Director shall, without further review, issue a Decision denying the claim.

(c) *Review of the records.* The Assistant Director will examine the other records submitted in support of the claim to prove those matters set forth in all other sections of the Act and the regulations, and will determine whether such records satisfy all other criteria for eligibility. For the purposes of verifying such eligibility, the Assistant Director may require the claimant or eligible surviving beneficiary to provide an authorization to release any record identified in these regulations. If the Assistant Director determines that the records do not satisfy the criteria for eligibility established by the Act and the regulations, the Assistant Director shall so advise the claimant or eligible surviving beneficiary in writing, setting forth the reasons for the determination, and shall provide the claimant or eligible surviving beneficiary 60 days from the date of notification, or such greater period as the Assistant Director permits, to furnish additional records to satisfy the requirements of the Act and the regulations. Where appropriate, the Assistant Director may require the claimant or eligible surviving beneficiary to provide an authorization to release additional records as an alternative to, or in addition to, the claimant or eligible beneficiary furnishing such additional records. If the claimant or eligible beneficiary fails, within sixty days or the greater period approved by the Assistant Director, to provide sufficient records or a valid release when requested by the Assistant Director, then the Assistant Director shall, without further review, issue a Decision denying the claim.

(d) *Decision.* The Assistant Director shall review each claim and issue a written Decision on each claim within twelve months of the date the claim was filed. The Assistant Director may request from any claimant, or from any individual or entity on behalf of the claimant, any relevant additional information or documentation necessary to complete the determination of eligibility under paragraphs (a), (b), or (c) of this section. The period beginning on the date on which the Assistant Director makes a request for such additional information or documentation and ending on the date on which the claimant or individual or entity acting on behalf of the claimant submits that information or documentation (or informs the Assistant Director that it is not possible to provide that information or that the claimant or individual or entity will not provide that information) shall not apply to the twelve-month period. Any Decision denying a claim shall set forth reason(s) for the denial, shall indicate that the Decision of the Assistant Director may be appealed to the Assistant Attorney General, Civil Division, in writing within 60 days of the date of the Decision, or such greater period as may be permitted by the Assistant Attorney General, and shall identify the address to which the appeal should be sent.

§ 79.73 Appeals procedures.

(a) An appeal must be in writing and must be received by the Radiation Exposure Compensation Program within sixty days of the date of the Decision denying the claim, unless a greater period has been permitted. Appeals must be sent to the following address: Radiation Exposure Compensation Program, Appeal of Decision, U.S. Department of Justice, P.O. Box 146, Ben Franklin Station, Washington, DC 20044–0146.

(b) The claimant or eligible surviving beneficiary must set forth in the appeal the reason(s) why he or she believes that the Decision of the Assistant Director is incorrect.

(c) Upon receipt of an appeal, the Radiation Exposure Compensation Program shall forward the appeal, the Decision, the claim, and all supporting documentation, to the Assistant Attorney General, or to the Appeals Officer if one is designated, for action on the appeal. If the appeal is not received within the 60-day period, or such greater period as may be permitted, the appeal may be denied without further review.

(d) The Assistant Attorney General or Appeals Officer shall review any appeal and other information forwarded by the Program. Within 90 days after the receipt of an appeal, the Assistant Attorney General or Appeals Officer shall issue a Memorandum either affirming or reversing the Assistant Director's Decision or, when appropriate, remanding the claim to the Assistant Director for further action. The Memorandum shall include a statement of the reason(s) for such reversal, affirmance, or remand. The Memorandum and all papers relating to the claim shall be returned to the Radiation Exposure Compensation Program, which shall promptly inform the claimant or eligible surviving beneficiary of the action of the Assistant Attorney General or Appeals Officer. A Memorandum affirming or reversing the Assistant Director's Decision shall be deemed to be the final action of the Department of Justice on the claim.

(e) Before seeking judicial review of a decision denying a claim under the Act, an individual must first seek review by the designated Appeals Officer. Once the appeals procedures are completed, an individual whose claim for compensation under the Act is affirmed on appeal may seek judicial review in a district court of the United States.

§ 79.74 [Reserved]

§ 79.75 Procedures for payment of claims.

(a) Payment shall be made to the claimant or to the legal guardian of the claimant, unless the claimant is deceased at the time of the payment. In cases involving a claimant who is deceased, payment shall be made to an eligible surviving beneficiary or to the legal guardian acting on behalf of the eligible surviving beneficiary, in accordance with the terms and conditions specified in the Act. Once the Program has received the claimant's or eligible surviving beneficiary's election to accept the payment, the Assistant Director shall ensure that the claim is paid within six weeks. All time frames for processing claims under the Act are suspended during periods where the radiation Trust Fund is not funded.

(b) In cases involving the approval of a claim, the Assistant Director shall take all necessary and appropriate steps to determine the correct amount of any offset to be made to the amount awarded under the Act and to verify the identity of the claimant or the existence of eligible surviving beneficiaries who are entitled by the Act to receive the payment the claimant would have received. The Assistant Director may conduct any investigation, and may require any claimant or eligible surviving beneficiary to provide or execute any affidavit, record, or document or authorize the release of any information the Assistant Director deems necessary to ensure that the compensation payment is made in the correct amount and to the correct person(s). If the claimant or eligible surviving beneficiary fails or refuses to execute an affidavit or release of

information, or to provide a record or document requested, or fails to provide access to information, such failure or refusal may be deemed to be a rejection of the payment, unless the claimant or eligible surviving beneficiary does not have and cannot obtain the legal authority to provide, release or authorize access to the required information, records or documents.

(c) Prior to authorizing payment, the Assistant Director shall require the claimant or each eligible surviving beneficiary to execute and provide an affidavit (or declaration under oath on the standard claim form) setting forth the amount of any payment made pursuant to a final award or settlement on a claim (other than a claim for worker's compensation), against any person, that is based on injuries incurred by the claimant on account of:

(1) Exposure to radiation from atmospheric nuclear testing while present in an affected area (as defined in § 79.11(a) of these regulations) at any time during the periods described in § 79.11(c) of these regulations; or

(2) Exposure to radiation during employment in a uranium mine, during employment as a uranium mill worker or during employment as an ore transporter at any time during the period described in section 5 of the Act. For purposes of this paragraph, a ''claim'' includes, but is not limited to, any request or demand for money made or sought in a civil action or made or sought in anticipation of the filing of a civil action, but shall not include requests or demands made pursuant to a life insurance or health insurance contract. If any such award or settlement payment was made, the Assistant Director shall subtract the sum of such award or settlement payments from the payment to be made under the Act.

(d) In the case of a claim filed under section 4(a)(1)(A)(i)(III) or section 4(a)(2)(C) of the Act, the Assistant Director shall require the claimant or each eligible surviving beneficiary to execute and provide an affidavit (or declaration under oath on the standard claim form) setting forth the amount of any payment made pursuant to a final award or settlement on a claim (other than a claim for worker's compensation) against any person or any payment made by the Department of Veterans Affairs, that is based on injuries incurred by the claimant on account of exposure to radiation as a result of onsite participation in a test involving the atmospheric detonation of a nuclear device. For purposes of this paragraph, a ''claim'' includes, but is not limited to, any request or demand for money made or sought in a civil action or made or sought in anticipation of a civil action, but shall not include requests or demands made pursuant to a life- or health-insurance contract.

(1) Payments by the Department of Veterans Affairs shall include:

(i) Any disability payments or compensation benefits paid to the claimant and his or her dependents while the claimant is alive; and

(ii) Any Dependency and Indemnity Compensation payments made to survivors due to death related to the illness for which the claim under the Act is submitted.

(2) Payments by the Department of Veterans Affairs shall not include:

(i) Active duty pay, retired pay, retainer pay, or payments under the Survivor Benefits Plan;

(ii) Death gratuities;

(iii) SGLI, VGLI, or mortgage, life or health insurance payments;

(iv) Burial benefits or reimbursement for burial expenses;

(v) Loans or loan guarantees;

(vi) Education benefits and payments;

(vii) Vocational rehabilitation benefits and payments;

(viii) Medical, hospital and dental benefits; or

(ix) Commissary and PX privileges.

(e) If any such award, settlement, or payment was made as described in paragraphs (c) or (d) of this section, the Assistant Director shall calculate the actuarial present value of such payment(s), and subtract the actuarial present value from the payment to be made under the Act. The actuarial present value shall be calculated using the worksheet attached as appendix C of this part in the following manner:

(1) Step 1. Enter the sum of the past payments received in each year in the appropriate rows in column (2). Additional rows will be added as needed to calculate present value of payments received in the years prior to 1960 and after 1990.

(2) Step 2. Enter the present CPI–U (to be obtained monthly from the Bureau of Labor Statistics, Department of Labor) in column (3).

(3) Step 3. Enter the CPI (Major Expenditure Classes—All Items) for each year in which payments were received in the appropriate row in column (4). (These measures are provided for 1960 through 1990. The measures for subsequent years will be obtained from the Bureau of Labor Statistics.)

(4) Step 4. For each row, multiply the amount in column (2) by the corresponding inflator (column (3) divided by column (4)) and enter the product in column (5).

(5) Step 5. Add the products in column (5) and enter the sum on the line labeled ''Total of column (5) equals actuarial present value of past payments.''

(6) Step 6. Subtract the total in Step 5 from the statutory payment of $75,000 and enter the remainder on the line labeled ''Net Claim Owed To Claimant.''

(f) When the Assistant Director has verified the identity of the claimant or each eligible surviving beneficiary who is entitled to the compensation payment or to a share of the compensation payment, and has determined the correct amount of the payment or the share of the payment, he or she shall notify the claimant or each eligible surviving beneficiary, or his or her legal guardian, and require such person(s) to sign an Acceptance of Payment Form. Such form shall be signed and returned within 60 days of the date of the form or such greater period as may be allowed by the Assistant Director. Failure to return the signed form within the required time may be deemed to be a rejection of the payment. Signing and returning the form within the required time shall constitute acceptance of the payment, unless the individual who has signed the form dies prior to receiving the actual payment, in which case the person who possesses the payment shall return it to the Assistant Director for redetermination of the correct disbursement of the payment.

(g) Rejected compensation payments or shares of compensation payments shall not be distributed to other eligible surviving beneficiaries, but shall be returned to the Trust Fund for use in paying other claims.

(h) Upon receipt of the Acceptance of Payment Form, the Assistant Director or the Constitutional and Specialized Tort Staff Director or Deputy Director, or their designee, shall authorize the appropriate authorities to issue a check to the claimant or to each eligible surviving beneficiary who has accepted payment out of the funds appropriated for this purpose.

(i) *Multiple payments.* (1) No claimant may receive payment under more than one subpart of these regulations for illnesses that he or she contracted. In addition to one payment for his or her illnesses, he or she may also receive one payment for each claimant for whom he or she qualifies as an eligible surviving beneficiary.

(2) An eligible surviving beneficiary who is not also a claimant may receive one payment for each claimant for whom he or she qualifies as an eligible surviving beneficiary.

Dated: July 24, 2002.

John Ashcroft,

Attorney General.

[FR Doc. 02–19221 Filed 8–6–02; 8:45 am]

BILLING CODE 4410–12–P

DEPARTMENT OF JUSTICE

28 CFR Part 79

[CIV101P; AG Order No. 2605–2002]

RIN 1105–AA75

Claims Under the Radiation Exposure Compensation Act Amendments of 2000; Expansion of Coverage to Uranium Millers and Ore Transporters; Expansion of Coverage for Uranium Miners; Representation and Fees

AGENCY: Civil Division, Department of Justice.

ACTION: Proposed rule.

SUMMARY: The Department of Justice (''the Department'') proposes to amend its existing regulations implementing the Radiation Exposure Compensation Act (''the Act'') to reflect amendments to the Act made in the Radiation Exposure Compensation Act Amendments of 2000 (''2000 Amendments''), enacted on July 10, 2000. This is the second of two related rulemakings and is a proposed rule. The related rulemaking is a final rule published elsewhere in this issue of the **Federal Register**. This proposed rule describes the expanded population of eligible uranium mine workers created by lowering the radiation exposure threshold for miners; identifies the new uranium mining states with respect to which miners may be eligible for compensation; includes provision for compensation to ''aboveground'' miners; sets forth employment eligibility criteria for the new claimant categories; describes the documentation that would be required to establish proof of employment in a uranium mine or mill or as an ore transporter; describes the medical documentation necessary to establish the existence of renal cancer and chronic renal disease; and revises the provision concerning representation of claimants before the Department of Justice with respect to claims brought under the Act.

DATES: Written comments must be submitted on or before October 7, 2002.

ADDRESSES: Please submit written comments to Gerard W. Fischer, Assistant Director, U.S. Department of Justice, Civil Division, P.O. Box 146, Ben Franklin Station, Washington, DC 20044–0146.

FOR FURTHER INFORMATION CONTACT: Gerard W. Fischer (Assistant Director), (202) 616–4090, and Dianne S. Spellberg (Senior Counsel), (202) 616–4129.

SUPPLEMENTARY INFORMATION: On July 10, 2000, the Radiation Exposure Compensation Act Amendments of 2000 were enacted, providing expanded coverage to individuals who developed one of the diseases specified in the amended Act following exposure to radiation related to the Federal Government's atmospheric nuclear weapons program or as a result of employment in the uranium production industry. This rule proposes amendments to the regulations governing radiation exposure compensation claims, principally in order to implement the 2000 Amendments' expansion of the Act to cover uranium mill workers and individuals employed in the transport of uranium ore or vanadium-uranium ore, and to expand the population of eligible uranium mine workers by lowering the radiation exposure threshold for miners, by enlarging the number of uranium mining states with respect to which miners may be eligible for compensation, and by including ''aboveground'' miners within the scope of the regulations.

This proposed rule sets forth the criteria that a claimant must establish to be eligible for compensation under certain provisions of the Act. Section 5(a)(1)(A) of the amended Act provides that certain ''miners,'' ''millers,'' and ''ore transporters'' are eligible for compensation. The terms ''miner,'' ''miller,'' and ''ore transporter'' are not self-defining. The definitions of those terms in the proposed rule are drafted broadly, reflecting the statutory objective to provide comprehensive compensation to all persons who contracted serious illnesses as a result of employment in uranium mines or uranium mills and as ore transporters. The structure of section 5(a)(1)(A) of the Act, as well as the legislative history, strongly indicate that Congress intended the words ''miner'' and ''miller'' to be simple shorthands for anyone who was employed in a uranium mine and a uranium mill, respectively. Accordingly, the proposed rule adopts broad definitions of the words ''miner'' and ''miller.'' Similarly, the rule defines an ''ore transporter'' as someone whose employment involved the transportation or hauling of uranium ore or vanadium-uranium ore from a uranium mine or uranium mill, including the transportation or hauling of ore from the ore buying station, ''upgrader,'' ''concentrator'' facility, or pilot plant areas of a mill by means of truck, rail, or barge.

The rule replaces the radiation exposure thresholds for claimants who were miners with a single minimum exposure level. Specifically, the requirement that a claimant or beneficiary establish exposure to 200 working level months (WLMs) of radiation if the claimant was a non-smoker and 300 WLMs if the claimant was a smoker and diagnosed with a compensable disease before age 45 (and 500 WLMs if a smoker and diagnosed after age 45) is stricken. Instead, a miner must establish a single exposure level of 40 WLMs of radiation to satisfy that ''uranium miner'' eligibility criterion.

The list of states in which an individual was employed in a uranium mine for purposes of establishing eligibility has been expanded to include South Dakota, Washington, Idaho, North Dakota, Oregon, and Texas. In addition, the Act provides that other states may be included for coverage if certain specific requirements are satisfied. The definition of ''uranium mine'' contained in the Act's provisions has been adopted in the rule and, accordingly, the rule expands coverage under the regulations to persons who worked in ''aboveground'' uranium mines.

In the case of millers and ore transporters—who are covered under the Act by virtue of the 2000 Amendments—the Act does not require specific proof of a certain level of exposure to radiation (as is required for miners), but instead require proof merely that a claimant was employed for at least one year in a uranium mill (as that term is defined in the proposed regulations), or in the transport of uranium ore or vanadium-uranium ore, in those states and during the time period specified in the Act. In addition, the claimant must have contracted a specified illness following such employment. The proposed rule describes the work history documentation required to establish proof of employment as a miller or as an ore transporter. The rule identifies numerous types of records that a claimant may submit to establish employment history. Moreover, the Department has accumulated extensive data to assist in evaluating a claimant's history of employment as a miller or as an ore transporter, including data obtained from a team of medical and scientific experts at the National Institute for Occupational Safety and Health (NIOSH) in Cincinnati, Ohio, who are studying the effects of radiation on mill workers. NIOSH was instrumental in detailing the work records it has accummulated for purposes of its studies and the personnel records that were available from the uranium mill companies. In addition, milling consultants for the Department provided extensive information during the course of a training workshop relative to the history of uranium milling for the period January 1, 1942, through December 31,

1971. The types of information and data collected by the Department include an exhaustive compilation of all uranium mills by state, size of the mills, tons of ore processed, ore types, type of milling circuit(s) at each mill, the number of employees at each mill, wage rate information, the ore suppliers (mines), and, in some instances, the names of the ore transporting companies that delivered the product from mine to mill. In light of the limited information available concerning ore transporting during the relevant period (1942–1971), the Department is particularly interested in receiving comments from individuals who operated ore transporting companies, or who were otherwise employed as ore haulers or transporters.

The proposed rule identifies particular forms of medical documentation that claimants can, and in some cases, must, provide in order to establish the existence of compensable diseases for miners, millers, and ore transporters, and also identifies other categories of health and medical records that the Department ordinarily will consult in determining whether there is sufficient evidence of disease to warrant compensation. In cases of claimants who are deceased and living claimants who were millers or ore transporters and who developed renal cancer or another chronic renal disease, the Act does not require submission of any particular form of written medical documentation. Section 5(b)(5) of the Act, however, requires that living claimants who developed lung cancer or a nonmalignant respiratory disease provide certain forms of written medical documentation, which are specified in the proposed rule. The proposed rule also reflects the requirements in section 5(c) of the Act that the Department treat certain forms of written medical documentation as conclusive evidence that a living claimant developed a nonmalignant respiratory disease or lung cancer. The proposed rule does not independently address the provisions concerning conclusive evidence in section 5(c)(2)(B) of the Act, because that section is substantially identical to section 5(c)(1)(B) and appears to have been included in the 2000 Amendments in error. The Department requests public comments on whether the regulations should accord any additional, independent effect to section 5(c)(2)(B).

The proposed rule provides specific clarification of the showing necessary to establish that a claimant developed renal cancer and chronic renal disease. (The renal cancer and chronic renal disease regulations apply only to millers and to ore transporters. The Act does not prescribe compensation for miners who contracted renal cancer or chronic renal disease.) The Department consulted with medical experts at the National Cancer Institute and NIOSH in order to identify what a claimant should document in order to establish that the claimant developed these illnesses. An expansive understanding of ''renal disease'' could imply a broad spectrum of impairment ranging from ''acute disease''' to ''chronic disease.'' However, because the revised Act provides compensation only for ''chronic'' illness, the Department determined that a minimum level of impairment must be demonstrated. Some individuals with diabetes would be able to present medical documentation reflecting an elevated creatinine, which is symptomatic of both chronic renal disease and diabetes, without an actual diagnosis of chronic renal disease. The Department was advised by NIOSH to include certain diagnostic criteria to preclude compensating claimants for a condition not covered by the Act.

Finally, section 79.74 of the proposed rule revises the regulation (currently 28 CFR 79.54) concerning representation of claimants and beneficiaries before the Department. The revised regulation implements the provision contained in section 9 of the amended Act limiting the fees that representatives of claimants and beneficiaries may receive in connection with a claim under the Act. In addition, the proposed rule would require that a claimant's or beneficiary's representative before the Radiation Exposure Compensation Program (''Program'') be either an attorney or a representative of a federally recognized Indian tribe. The section heading of section 9 of the amended Act (''Attorney Fees''), as well as certain statements in the legislative history of the 2000 Amendments, *see, e.g.,* H.R. Rep. 106–697, at 12, 16 (2000), suggest a possible congressional assumption that ''representatives'' of claimants and beneficiaries would be attorneys. Nevertheless, nothing in the Act, in the Administrative Procedure Act, or in any other law either prohibits or requires the Department of Justice to permit non-attorneys to represent claimants and beneficiaries before the Department with respect to radiation exposure compensation claims. *See* 5 U.S.C. 500(d)(1), 555(b). In the absence of such specific statutory direction, Congress has left it within the discretion of the Department to decide whether or not to permit ''duly qualified'' persons, *see* 5 U.S.C. 555(b), other than attorneys to represent interested parties in administrative proceedings before the Department. *See Sperry* v. *Florida,* 373 U.S. 379, 396–98 (1963). The Department has determined generally not to permit non-attorneys to represent claimants and beneficiaries before the Program with respect to radiation exposure compensation claims. The Department is of the view that claimants and beneficiaries would be best served by relying on the expertise and legal training of attorneys in cases where such claimants and beneficiaries determine it would be beneficial to use the services of a representative. Moreover, an attorney representing a claimant or beneficiary before the Department must be a member in good standing of the bar of the highest court of a state, 5 U.S.C. 500(b), which provides assurance that an attorney representative will be subject to oversight and disciplinary rules that will best guarantee faithful, ethical, and adequate representation of claimants and beneficiaries. An attorney representative may hire, and make use of, experts, aids, paralegals, and other persons who are not attorneys. The use of such assistants and experts, however, will not affect the fee limitations specified in the Act and in this proposed rule, which establish an overall limitation on the total amount of fees that a representative, along with his or her assistants and experts, may receive. The proposed rule permits an exception to the attorney requirement for claimant or beneficiary representatives who are representatives of a federally recognized Indian tribe. This exception is included in recognition of the role such tribal representatives traditionally have played in representing claimants; the specialized knowledge and expertise such representatives have developed with respect to the language, culture, and familial relationships of claimants who are tribal members; and Congress's directive in section 6(d)(5) of the amended Act that ''[a]ny procedures under this subsection shall take into consideration and incorporate, to the fullest extent feasible, Native American law, tradition, and custom with respect to the submission and processing of claims by Native Americans.''

A Final Rulemaking Related to This Proposed Rulemaking

Elsewhere in today's issue of the **Federal Register** the Department is publishing a related, final rule entitled *Claims Under the Radiation Exposure Compensation Act Amendments of 2000; Technical Amendments* (CIV 100). That final rule is technical in nature and provides conforming amendments to

implement the Radiation Exposure Compensation Act Amendments of 2000.

Regulatory Flexibility Act

The Attorney General, in accordance with the Regulatory Flexibility Act (5 U.S.C. 605(b)), has reviewed this regulation and by approving it certifies that this regulation will not have a significant economic impact on a substantial number of small entities for the following reason: The claimant population benefitted by these regulations is limited to persons who developed a specified illness following exposure to radiation related to the Federal Government's atmospheric nuclear weapons program or as a result of employment in the uranium production industry. The regulations set forth eligibility criteria that individual claimants must satisfy in order to be eligible for compensation. They will have no impact on small business competitiveness.

Executive Order 12866

This regulation has been drafted and reviewed in accordance with Executive Order 12866, ''Regulatory Planning and Review,'' section 1(b), Principles of Regulation. The Department of Justice has determined that this rule is a ''significant regulatory action'' under Executive Order 12866, section 3(f), Regulatory Planning and Review, and, accordingly, this rule has been reviewed by the Office of Management and Budget.

It is not clear whether this proposed rule should be considered ''economically significant.'' The uncertainty arises from the inability to quantify with precision the number of miners, millers and ore transporters that contracted one of the occupational illnesses compensable under the Act and the attendant economic impact of their receipt of benefits. In the event that the measure of these benefits exceeds $100 million, then this proposed rule will be ''economically significant.'' To date, after nearly 24 months of operation under the new law, less than $20 million has been approved for newly eligible miners, millers, and ore transporters. It is difficult at this time to ascertain whether the cumulative economic impact of claims brought by such persons will eventually reach the $100 million threshold amount. Accordingly, the Department requests public comment on the issue of whether this rule should be considered ''economically significant.''

Executive Order 13132

This regulation will not have substantial direct effects on the States, on the relationship between the national government and the States, or on distribution of power and responsibilities among the various levels of government. Therefore, in accordance with Executive Order 13132, it is determined that this rule does not have sufficient federalism implications to warrant the preparation of a Federalism Assessment.

Executive Order 12988

This regulation meets the applicable standards set forth in sections 3(a) and 3(b)(2) of Executive Order 12988, Civil Justice Reform.

Unfunded Mandates Reform Act of 1995

This rule will not result in the expenditure by state, local, and tribal governments, in the aggregate, or by the private sector, of $100,000,000 or more in any one year, and it will not significantly or uniquely affect small governments. Therefore, no actions were deemed necessary under the provisions of the Unfunded Mandates Reform Act of 1995.

Small Business Regulatory Enforcement Fairness Act of 1996

Because of the uncertainty of the eventual cumulative impact of the new provisions reflected in this rule, the Department is uncertain whether this rule meets the standard for a major rule. At present, the Department is of the opinion that this is not a major rule as defined by section 251 of the Small Business Regulatory Enforcement Fairness Act of 1996, 5 U.S.C. 804, and that it will not result in an annual effect on the economy of $100,000,000 or more, a major increase in costs or prices, or significant adverse effects on competition, employment, investment, productivity, innovation, or on the ability of United States-based companies to compete with foreign-based companies in domestic and export markets.

Paperwork Reduction Act

Information collection associated with this regulation has been approved by the Office of Management and Budget under the provisions of the Paperwork Reduction Act of 1995. The OMB control number for this collection is 1105–0052.

List of Subjects in 28 CFR Part 79

Administrative practice and procedure, Authority delegations (Government agencies), Cancer, Claims, Radiation Exposure Compensation Act, Radioactive materials, Reporting and recordkeeping requirements, Uranium mining, Uranium milling, Uranium, Uranium ore hauling.

Accordingly, the Department of Justice proposes to amend part 79 of chapter I of Title 28 of the Code of Federal Regulations as follows:

PART 79—CLAIMS UNDER THE RADIATION EXPOSURE COMPENSATION ACT

1. The authority citation for part 79 is revised to read as follows:

Authority: Secs. 6(a), 6(i) and 6(j), Pub. L. 101–426, 104 Stat. 920, as amended by sections 3(c)–(h), Pub. L. 106–245, 114 Stat. 501 (42 U.S.C. 2210 note; 5 U.S.C. 500(b)).

2. Subparts E, F, and G and § 79.74 of subpart H are added, to read as follows:

Subpart E—Uranium Miners

Sec.
79.40 Scope of subpart.
79.41 Definitions.
79.42 Criteria for eligibility.
79.43 Proof of employment as a miner.
79.44 Proof of working level month exposure to radiation.
79.45 Proof of lung cancer.
79.46 Proof of nonmalignant respiratory disease.

Subpart F—Uranium Millers

79.50 Scope of subpart.
79.51 Definitions.
79.52 Criteria for eligibility.
79.53 Proof of employment as a miller.
79.54 Proof of lung cancer.
79.55 Proof of nonmalignant respiratory disease.
79.56 Proof of renal cancer.
79.57 Proof of chronic renal disease.

Subpart G—Ore Transporters

79.60 Scope of subpart.
79.61 Definitions.
79.62 Criteria for eligibility.
79.63 Proof of employment as an ore transporter.
79.64 Proof of lung cancer.
79.65 Proof of nonmalignant respiratory disease.
79.66 Proof of renal cancer.
79.67 Proof of chronic renal disease.

Subpart E—Uranium Miners

§ 79.40 Scope of subpart.

The regulations in this subpart define the eligibility criteria for compensation under section 5 of the Act pertaining to miners, i.e., uranium mine workers, and the nature of the evidence that will be accepted as proof of the various criteria. Section 5 of the Act provides for a payment of $100,000 to miners who contracted lung cancer or one of a limited number of nonmalignant respiratory diseases following exposure to a defined minimum level of radiation

during employment in an aboveground or underground uranium mine or uranium mines in specified states during the period beginning January 1, 1942, and ending December 31, 1971.

§ 79.41 Definitions.

(a) *Cor pulmonale* means heart disease, including hypertrophy of the right ventricle, due to pulmonary hypertension secondary to fibrosis of the lung.

(b) *Designated time period* means the period beginning on January 1, 1942, and ending on December 31, 1971.

(c) *Fibrosis of the lung or pulmonary fibrosis* for purposes of the Act and these regulations means chronic inflammation and scarring of the pulmonary interstitium and alveoli with collagen deposition and progressive thickening causing pulmonary impairment.

(d) *Lung cancer* means any physiological condition of the lung, trachea, or bronchus that is recognized under that name or nomenclature by the National Cancer Institute. The term includes in situ lung cancers.

(e) *Miner* or *uranium mine worker* means a person who operated or otherwise worked in a uranium mine.

(f) *National Institute for Occupational Safety and Health (NIOSH) certified ''B'' reader* means a physician who is certified as such by NIOSH. A list of certified ''B'' readers is available from the Radiation Exposure Compensation Program upon request.

(g) *Nonmalignant respiratory disease* means fibrosis of the lung, pulmonary fibrosis, cor pulmonale related to fibrosis of the lung, silicosis, or pneumoconiosis.

(h) *Pneumoconiosis* means a chronic lung disease resulting from inhalation and deposition in the lung of particulate matter, and the tissue reaction to the presence of the particulate matter.

(i) *Readily available documentation* means documents in the possession, custody, or control of the claimant or an immediate family member.

(j) *Silicosis* means a pneumoconiosis due to the inhalation of the dust of stone, sand, flint, or other materials containing silicon dioxide, characterized by the formation of pulmonary fibrotic changes.

(k) *Specified state* means Colorado, New Mexico, Arizona, Wyoming, South Dakota, Washington, Utah, Idaho, North Dakota, Oregon, or Texas. Additional states may be included, provided:

(1) An Atomic Energy Commission uranium mine was operated in such state at any time during the period beginning on January 1, 1942, and ending on December 31, 1971;

(2) The state submits an application to the Assistant Director (specified in 28 CFR 79.70(a)) to include such state; and

(3) the Assistant Director makes a determination to include such state.

(l) *Uranium mine* means any underground excavation, including ''dog holes'' and open-pit, strip, rim, surface, or other aboveground mines where uranium ore or vanadium-uranium ore was mined or otherwise extracted.

(m) *Working level* means the concentration of the short half-life daughters of radon that will release (1.3×10^5) million electron volts of alpha energy per liter of air.

(n) *Working level month of radiation* means radiation exposure at the level of one working level every work day for a month, or an equivalent cumulative exposure over a greater or lesser amount of time.

(o) *Written diagnosis by a physician* means a written determination of the nature of a disease made from a study of the signs and symptoms of a disease that is based on a physical examination of the patient, medical imaging or a chemical, microscopic, microbiologic, immunologic or pathologic study of physiologic and functional tests, secretions, discharges, blood, or tissue. For purposes of satisfying the requirement of a ''written diagnosis by a physician'' for living claimants specified in §§ 79.45 and 79.46, a physician submitting a written diagnosis of a nonmalignant respiratory disease or lung cancer must be employed by the Indian Health Service or the Department of Veterans Affairs or be certified by a state medical board, and must have a documented, ongoing physician-patient relationship with the claimant. An ''ongoing physician-patient relationship'' can include referrals made to specialists from a primary care provider (and accepted by the primary care provider) for purposes of diagnosis or treatment.

§ 79.42 Criteria for eligibility.

To establish eligibility for compensation under this subpart, a claimant or eligible surviving beneficiary must establish each of the following:

(a) The claimant was employed as a miner in a specified state;

(b) The claimant was so employed at any time during the period beginning on January 1, 1942, and ending on December 31, 1971;

(c) The claimant was exposed during the course of his or her mining employment to 40 or more working level months of radiation; and

(d) The claimant contracted lung cancer or a nonmalignant respiratory disease following such exposure.

§ 79.43 Proof of employment as a miner.

(a) The Department will accept, as proof of employment for a designated time period, information contained in any of the following records:

(1) Records created by or gathered by the Public Health Service (PHS) in the course of any health studies of uranium workers during or including the period 1942–1990;

(2) Records of a uranium worker census performed by the PHS at various times during the period 1942–1990;

(3) Records of the Atomic Energy Commission (AEC), or any of its successor agencies; and

(4) Records of federally supported, health-related studies of uranium workers, including:

(i) Studies conducted by Geno Saccamanno, M.D., St. Mary's Hospital, Grand Junction, Colorado; and

(ii) Studies conducted by Jonathan Samet, M.D., University of New Mexico School of Medicine.

(b) The Program will presume that the employment history for the time period indicated in records listed in paragraph (a) of this section is correct. If the claimant or eligible surviving beneficiary wishes to contest the accuracy of such records, then the claimant or eligible surviving beneficiary may provide one or more of the records identified in paragraph (c) of this section, and the Assistant Director will determine whether the employment history indicated in the records listed in paragraph (a) is correct.

(c) If the sources in paragraph (a) of this section do not contain information regarding the claimant's uranium mine employment history, do not contain sufficient information to establish exposure to at least 40 working level months of radiation, or if a claimant or eligible surviving beneficiary wishes to contest the accuracy of such records, then the claimant or eligible surviving beneficiary may submit records from any of the following sources, and the Assistant Director shall consider such records (in addition to any sources listed in paragraph (a) of this section) in order to determine whether the claimant has established the requisite employment history:

(1) Governmental records of any of the specified states, including records of state regulatory agencies, containing information on uranium mine workers and uranium mines;

(2) Records of any business entity that owned or operated a uranium mine, or its successor-in-interest;

(3) Records of the Social Security Administration reflecting the identity of the employer, the years and quarters of employment, and the wages received during each quarter;

(4) Federal or state income tax records that contain relevant statements regarding the claimant's employer and wages;

(5) Records containing factual findings by any governmental judicial body, state worker's compensation board, or any governmental administrative body adjudicating the claimant's rights to any type of benefits (which will be accepted only to prove the fact of and duration of employment in a uranium mine);

(6) Statements in medical records created during the period 1942–1971 indicating or identifying the claimant's employer and occupation;

(7) Records of an academic or scholarly study, not conducted in anticipation of or in connection with any litigation, and completed prior to 1990; and

(8) Any other contemporaneous record that indicates or identifies the claimant's occupation or employer.

(d) To the extent that the documents submitted from the sources identified in this section do not so indicate, the claimant or eligible surviving beneficiary must set forth under oath on the standard claim form the following information, if known:

(1) The names of the mine employers for which the claimant worked during the time period identified in the documents;

(2) The names and locations of any mines in which the claimant worked;

(3) The actual time period the claimant worked in each mine;

(4) The claimant's occupation in each mine; and

(5) Whether the mining employment was conducted aboveground or underground.

(e) If the claimant or eligible surviving beneficiary cannot provide the name or location of any uranium mine at which the claimant was employed as required under paragraph (d)(2) of this section, then the Program shall, if possible, determine such information from records reflecting the types of mines operated or owned by the entity for which the claimant worked.

(f) If the information provided under paragraphs (a) and (c) of this section is inadequate to determine the time period during which the claimant was employed in each uranium mine, then the Program will, where possible, calculate such employment periods in the following manner, for purposes of calculating working level months of exposure:

(1) If records of the Social Security Administration exist that indicate the claimant's work history, the Program will estimate the period of employment by dividing the gross quarterly income by the average pay rate per hour for the claimant's occupation;

(2) If such Social Security Administration records do not exist, but other records exist that indicate that the claimant was employed in a uranium mine on the date recorded in the record, but do not indicate the period of employment, then the Program will apply the following presumptions:

(i) If the records indicate that the claimant worked at the same mine or for the same uranium mining company on two different dates at least three months apart but less than 12 months apart, then the Program will presume that the claimant was employed at the mine or for the mining company for the entire 12-month period beginning on the earlier date.

(ii) If the records indicate that the claimant worked at the same mine or for the same uranium mining company on two different dates at least one month apart but less than three months apart, then the Program will presume that the claimant was employed at the mine or for the mining company for the entire six-month period beginning on the earlier date.

(iii) If the records indicate that the claimant worked at any mine or for a uranium mining company on any date within the designated time period, but the presumptions listed above are not applicable, then the Program will presume that the claimant was employed at the mine or for the mining company for a six-month period, consisting of three months before and three months after the date indicated.

(g) In determining whether a claimant satisfies the employment and exposure criteria of the Act, the Assistant Director shall resolve all reasonable doubt in favor of the claimant. If the Assistant Director concludes that the claimant has not satisfied the employment or exposure requirements of the Act, the claimant or eligible surviving beneficiary will be notified and afforded the opportunity, in accordance with the provisions of § 79.72(c), to submit additional records to establish that the statutory criteria are satisfied.

§ 79.44 Proof of working level month exposure to radiation.

(a) If one or more of the sources in § 79.43(a) contain a calculated total of working level months (WLMs) of radiation for the claimant equal to or greater than 40 WLMs, then the Program will presume that total to be correct, absent evidence to the contrary, in which case the claimant or eligible surviving beneficiary need not submit additional records.

(b) If the sources in § 79.43(a) do not contain a calculated total of WLMs of radiation for the claimant, or contain a calculated total that is less than 40 WLMs, a claimant or eligible surviving beneficiary may submit the following records reflecting a calculated number of WLMs of radiation for periods of employment established under § 79.43(c):

(1) Certified copies of records of regulatory agencies of the specified states, provided that the records indicate the mines at which the claimant was employed, the time period of the claimant's employment in each mine, the exposure level in each mine during the claimant's employment, and the calculations on which the claimant's WLMs are based, unless the calculation is apparent;

(2) Certified copies of records of the owner or operator of a uranium mine in the specified states, provided that the records indicate the mines at which the claimant was employed, the time period of the claimant's employment in each mine, the exposure level in each mine during the claimant's employment, and the calculations on which the claimant's WLMs are based, unless the calculation is apparent.

(c) If the number of WLMs established under paragraphs (a) and (b) of this section is equal to or greater than 40 WLMs of radiation, the claimant or eligible surviving beneficiary need not submit additional records. When the sources referred to in paragraphs (a) and (b) of this section do not establish a calculated number of at least 40 WLMs, the Program will, where possible, calculate additional WLMs in the manner set forth in paragraphs (d) through (g) of this section for the periods of employment for which the sources in paragraphs (a) and (b) do not establish calculated totals. When calculating an exposure level for a particular period of a claimant's employment history, the Program will apply aboveground exposure levels with respect to those periods in which the claimant worked principally aboveground and will apply underground exposure levels with respect to those periods in which the claimant worked principally underground.

(d) To the extent the sources referred to in paragraphs (a) and (b) of this section do not contain a calculated number of WLMs, but do contain annual

exposure levels measured in Working Levels (WLs) for mines in which the claimant was employed, the Program will calculate the claimant's exposure to radiation measured in WLMs in the manner set forth in paragraph (h) of this section.

(e) For periods of employment in a uranium mine that a claimant establishes under § 79.43(c) as to which paragraph (d) of this section is not applicable, the Program will, where possible, use any or all of the following sources in computing the annual exposure level measured in WLs in each mine for the period of the claimant's employment, in the manner set forth in paragraph (g) of this section:

(1) Records of the AEC, or its successor agencies;

(2) Records of the PHS, including radiation-level measurements taken in the course of health studies conducted of uranium miners during or including the period 1942–1971;

(3) Records of the United States Bureau of Mines;

(4) Records of regulatory agencies of the specified states; or

(5) Records of the business entity that was the owner or operator of the mine.

(f) For periods of employment in unidentified or misidentified uranium mines that a claimant establishes under § 79.43(c)–(f), the Program will determine annual exposure levels measured in WLs in the unidentified or misidentified mines by calculating an average of the annual exposure levels measured in WLs in all the uranium mines owned or operated by the entities for which the claimant worked during the appropriate time periods and in the identified states.

(g) With respect to periods of employment in a uranium mine that a claimant establishes under § 79.43(c) as to which paragraph (d) of this section is not applicable, and periods of employment in unidentified or misidentified uranium mines that a claimant establishes under § 79.43(c)–(f), the Program will use the following methodology to calculate the annual exposure level measured in WLs for each mine:

(1) If one or more radiation measurements are available for a mine in a given year, such values will be averaged to generate the WLs for the mine for that year.

(2) If radiation measurements exist for the mine, but not for the year in which the claimant was employed in the mine, the WLs for the mine for that year will be estimated if possible as follows:

(i) If annual average measurements exist within four years of the year in which the claimant was employed in the mine, the measurements for the two years closest will be averaged, and that value will be assigned to the year the claimant was employed in the mine;

(ii) If one or more annual average measurements exist for a mine, but are not more than five years from the year the claimant was employed, the annual average closest in time will be assigned either forward or backward in time for two years.

(3) If the methods described in paragraphs (g)(1) and (2) of this section interpolate or project the annual exposure level measured in WLs for a mine in a year in which the claimant was employed in the mine, the Program will use an estimated average for mines of the same or similar type, ventilation, and ore composition in the same geographical area for that year. An estimated area average will be calculated as follows:

(i) If actual measurements from three or more mines of the same or similar type, ventilation, and ore composition are available from mines in the same locality as the mine in which the claimant was employed, the average of the measurements for the mines within that locality will be used.

(ii) If there are insufficient actual measurements from mines in the same locality to use the method in paragraph (g)(3)(A) of this section, an average of exposure levels in mines in the same mining district will be used.

(iii) If there is no average of exposure levels from mines in the same mining district, the average of exposure levels in mines in the same state will be used.

(iv) If there are insufficient actual measurements from mines in the same state, the estimated average for the State of Colorado for the relevant year will be used.

(4) With respect to a year between 1942 and 1949, if the claimant was employed in a mine for which no exposure levels are available for that year, then the Program will estimate the annual exposure levels measured in WLs by averaging the two earliest exposure levels recorded from that mine after the year 1941. If there are not two exposure levels recorded from that mine, the Program will estimate the WLs by averaging the two earliest exposure levels after the year 1941 from the mines identified according to the methods set forth in paragraphs (g)(3)(i)–(iv).

(h) The Program will calculate a claimant's total exposure to radiation expressed in WLMs, for purposes of establishing eligibility under § 79.42(c), by adding together the WLMs for each period of employment that the claimant has established. For those periods of a claimant's employment for which the Program has obtained or calculated WLs pursuant to paragraphs (d)–(g) of this section, the Program shall determine WLMs by multiplying the WL by the pertinent time period, measured in months, yielding a claimant's exposure to radiation expressed in WLMs.

§ 79.45 Proof of lung cancer.

(a) In determining whether a claimant developed lung cancer following pertinent employment as a miner, the Assistant Director shall resolve all reasonable doubt in favor of the claimant. A conclusion that a claimant developed lung cancer must be supported by medical documentation. In cases where the claimant is deceased, the claimant's beneficiary may submit any form of medical documentation specified in paragraph (e) of this section. A living claimant also may submit any form of medical documentation. However, a living claimant must at a minimum submit the medical documentation required in paragraph (e)(2) of this section. In all cases, the Program will review submitted medical documentation, and will, in addition and where appropriate, review any pertinent records discovered within the sources identified in paragraphs (b), (c), and (d) of this section.

(b) Where appropriate, the Radiation Exposure Compensation Program will search the records of the PHS (including NIOSH), created or gathered during the course of any health study of uranium workers conducted or being conducted by these agencies, to determine whether those records contain proof of the claimant's medical condition. (In cases where the claimant is deceased, the Program will accept as proof of medical condition the verification of the PHS or NIOSH that it possesses medical records or abstracts of medical records of the claimant that contain a verified diagnosis of lung cancer.)

(c) If a claimant was diagnosed as having lung cancer in the State of Arizona, Colorado, Nevada, New Mexico, Utah, or Wyoming, and the claimant or eligible surviving beneficiary submits with the claim an Authorization To Release Medical or Other Information, valid in the state of diagnosis, that authorizes the Radiation Exposure Compensation Program to contact the appropriate state cancer or tumor registry, the Program will, where appropriate, request the relevant information from that registry and will review records that it obtains from the registry. (In cases where the claimant is deceased, the Program will accept as proof of medical condition verification

from the state cancer or tumor registry that it possesses medical records or abstracts of medical records of the claimant that contain a verified diagnosis of lung cancer.)

(d) If medical records regarding the claimant were gathered during the course of any federally supported, health-related study of uranium workers, and the claimant or eligible surviving beneficiary submits with the claim an Authorization To Release Medical or Other Information that authorizes the Program to contact the custodian of the records of the study to determine if proof of the claimant's medical condition is contained in the records of the study, the Program will, where appropriate, request such records from that custodian and will review records that it obtains from the custodian. (In cases where the claimant is deceased, the Program will accept as proof of the claimant's medical condition such medical records or abstracts of medical records containing a verified diagnosis of lung cancer.)

(e)(1) A claimant or beneficiary may submit any of the following forms of medical documentation in support of a claim that the claimant contracted lung cancer. Such documentation will be most useful where it contains an explicit statement of diagnosis or such other information or data from which the appropriate authorities at the National Cancer Institute can make a diagnosis to a reasonable degree of medical certainty:

(i) Pathology report of tissue biopsy, including, but not limited to, specimens obtained by any of the following methods:

(A) Surgical resection;

(B) Endoscopic endobronchial or transbronchial biopsy;

(C) Bronchial brushings and washings;

(D) Pleural fluid cytology;

(E) Fine needle aspirate;

(F) Pleural biopsy;

(G) Sputum cytology;

(ii) Autopsy report;

(iii) Bronchoscopy report;

(iv) One of the following summary medical reports:

(A) Physician summary report;

(B) Hospital discharge summary report;

(C) Operative report;

(D) Radiation therapy summary report;

(E) Oncology summary or consultation report;

(v) Reports of radiographic studies, including:

(A) X-rays of the chest;

(B) Chest tomograms;

(C) Computer-assisted tomography (CT);

(D) Magnetic resonance imaging (MRI);

(vi) Death certificate, provided that it is signed by a physician at the time of death; or

(vii) Any of the forms of documentation enumerated in paragraph (e)(2) of this section.

(2) Notwithstanding any other documentation provided, a living claimant must at a minimum provide the following medical documentation:

(i) Either:

(A) An arterial blood gas study administered at rest in a sitting position, or an exercise arterial blood gas test, reflecting values equal to or less than the values set forth in the Tables in Appendix B of this part; or

(B) A written diagnosis by a physician in accordance with § 79.41(o); and

(ii) One of the following:

(A) A chest x-ray on full-size film administered in accordance with standard techniques accompanied by:

(*1*) Interpretive reports of the x-ray by two NIOSH certified ''B'' readers, rating the film at quality 1 or 2 and classifying the existence of disease of category 1/0 or higher according to a 1980 report of the International Labor Office (known as the ''ILO'') or subsequent revisions; or

(*2*) Medical documentation interpreting the chest x-ray from a physician employed by the Indian Health Service or the Department of Veterans Affairs who has a documented, ongoing physician-patient relationship with the claimant (which may include referrals to physicians employed by the Indian Health Service or the Department of Veterans Affairs for the purposes of diagnosis or treatment);

(B) High resolution computed tomography scans (commonly known as ''HRCT scans''), including computer-assisted tomography scans (commonly known as ''CAT scans''), magnetic resonance imaging scans (commonly known as ''MRI scans''), and positron emission tomography scans (commonly known as ''PET scans''), and interpretive reports of such scans;

(C) Pathology reports of tissue biopsies; or

(D) Pulmonary function tests indicating restrictive lung function and consisting of three tracings recording the results of the forced expiratory volume in one second (FEV1) and the forced vital capacity (FVC) administered and reported in accordance with the Standardization of Spirometry—1987 Update by the American Thoracic Society, and reflecting values for FEV1 or FVC that are less than or equal to 80% of the predicted value for an individual of the claimant's age, sex, and height, as set forth in the Tables in Appendix A.

(f) The Assistant Director shall treat any documentation described in paragraph (e)(2)(i)(B) or paragraph (e)(2)(ii)(A) of this section as conclusive evidence of the claimant's lung cancer; provided, however, that the Program may subject such documentation to a fair and random audit procedure to guarantee its authenticity and reliability for purposes of treating it as conclusive evidence; and provided further that, in order to be treated as conclusive evidence, a written diagnosis described in paragraph (e)(2)(i)(B) must be by a physician who is employed by the Indian Health Service or the Department of Veterans Affairs or who is certified by a state medical board, and who must have a documented, ongoing physician-patient relationship with the claimant. Notwithstanding the conclusive effect given to certain evidence, nothing in this paragraph shall be construed as relieving a living claimant of the obligation to provide the Program with the forms of documentation required under paragraph (e)(2).

§ 79.46 Proof of nonmalignant respiratory disease.

(a) In determining whether a claimant developed a nonmalignant respiratory disease following pertinent employment as a miner, the Assistant Director shall resolve all reasonable doubt in favor of the claimant. A conclusion that a claimant developed a nonmalignant respiratory disease must be supported by medical documentation. In cases where the claimant is deceased, the claimant's beneficiary may submit any form of medical documentation specified in paragraph (d)(1) of this section, and for proof of cor pulmonale must also submit one or more forms of documentation specified in paragraph (d)(2). A living claimant also may submit any form of medical documentation. However, a living claimant must at a minimum submit the medical documentation required in paragraph (d)(3) of this section, and for proof of cor pulmonale must also submit one or more forms of documentation specified in paragraph (d)(2). In all cases, the Program will review submitted medical documentation, and will, in addition and where appropriate, review any pertinent records discovered within the sources referred to in paragraphs (b) and (c) of this section. With respect to a deceased claimant, the Program will treat as equivalent to a diagnosis of pulmonary fibrosis any diagnosis of ''restrictive lung disease'' made by a physician employed by the Indian Health Service.

(b) Where appropriate, the Radiation Exposure Compensation Program will search the records of the PHS (including NIOSH), created or gathered during the course of any health study of uranium workers conducted or being conducted by these agencies, to determine whether those records contain proof of the claimant's medical condition. (In cases where the claimant is deceased, the Program will accept as proof of medical condition the verification of the PHS or NIOSH that it possesses medical records or abstracts of medical records of the claimant that contain a verified diagnosis of a nonmalignant respiratory disease.)

(c) If medical records regarding the claimant were gathered during the course of any federally supported, health-related study of uranium workers and the claimant or eligible surviving beneficiary submits with the claim an Authorization To Release Medical or Other Information that authorizes the Program to contact the custodian of the records of the study to determine if proof of the claimant's medical condition is contained in the records of the study, the Program will, where appropriate, request such records from that custodian and will review records that it obtains from the custodian. (In cases where the claimant is deceased, the Program will accept as proof of the claimant's medical condition such medical records or abstracts of medical records containing a verified diagnosis of a nonmalignant respiratory disease.)

(d)(1) A claimant or beneficiary may submit any of the following forms of medical documentation in support of a claim that the claimant contracted a nonmalignant respiratory disease, including pulmonary fibrosis, fibrosis of the lung, cor pulmonale, silicosis, and pneumoconiosis. Such documentation will be most useful where it contains an explicit statement of diagnosis or such other information or data from which the appropriate authorities at the National Cancer Institute can make a diagnosis to a reasonable degree of medical certainty:

(i) Pathology report of tissue biopsy;

(ii) Autopsy report;

(iii) If an x-ray exists, the x-ray and interpretive reports of the x-ray by two NIOSH certified ''B'' readers classifying the existence of disease of category 1/0 or higher according to a 1980 report of the International Labor Office (known as the ''ILO''), or subsequent revisions;

(iv) If no x-rays exist, an x-ray report;

(v) Physician summary report;

(vi) Hospital discharge summary report;

(vii) Hospital admitting report;

(viii) Death certificate, provided that it is signed by a physician at the time of death; or

(ix) Any form of documentation enumerated in paragraphs (d)(2) and (d)(3) of this section.

(2) In order to demonstrate that the claimant developed cor pulmonale related to fibrosis of the lung, the claimant or beneficiary must, at a minimum, submit one or more of the following medical records:

(i) Right heart catheterization;

(ii) Cardiology summary or consultation report;

(iii) Electrocardiogram;

(iv) Echocardiogram;

(v) Physician summary report;

(vi) Hospital discharge report;

(vii) Autopsy report;

(viii) Report of physical examination;

(ix) Death certificate, provided that it is signed by a physician at the time of death.

(3) Notwithstanding any other documentation provided, a living claimant must at a minimum provide the following medical documentation:

(i) Either:

(A) An arterial blood gas study administered at rest in a sitting position, or an exercise arterial blood gas test, reflecting values equal to or less than the values set forth in the Tables in Appendix B of this part; or

(B) A written diagnosis by a physician in accordance with § 79.41(o); and

(ii) One of the following:

(A) A chest x-ray on full-size film administered in accordance with standard techniques accompanied by:

(*1*) Interpretive reports of the x-ray by two NIOSH certified ''B'' readers, rating the film at quality 1 or 2 and classifying the existence of disease of category 1/0 or higher according to a 1980 report of the International Labor Office (known as the ''ILO''), or subsequent revisions; or

(*2*) Medical documentation interpreting the chest x-ray from a physician employed by the Indian Health Service or the Department of Veterans Affairs who has a documented, ongoing physician-patient relationship with the claimant (which may include referrals to physicians employed by the Indian Health Service or the Department of Veterans Affairs for the purposes of diagnosis or treatment);

(B) High-resolution computed tomography scans (commonly known as ''HRCT scans''), including computer-assisted tomography scans (commonly known as ''CAT scans''), magnetic resonance imaging scans (commonly known as ''MRI scans''), and positron emission tomography scans (commonly known as ''PET scans''), and interpretive reports of such scans;

(C) Pathology reports of tissue biopsies; or

(D) Pulmonary function tests indicating restrictive lung function and consisting of three tracings recording the results of the forced expiratory volume in one second (FEV1) and the forced vital capacity (FVC) administered and reported in accordance with the Standardization of Spirometry—1987 Update by the American Thoracic Society, and reflecting values for FEV1 or FVC that are less than or equal to 80% of the predicted value for an individual of the claimant's age, sex, and height, as set forth in the Tables in Appendix A.

(e) The Assistant Director shall treat any documentation described in paragraph (d)(3)(i)(B) or paragraph (d)(3)(ii)(A) as conclusive evidence of the claimant's nonmalignant respiratory disease; provided, however, that the Program may subject such documentation to a fair and random audit to guarantee its authenticity and reliability for purposes of treating it as conclusive evidence; and provided further that, in order to be treated as conclusive evidence, a written diagnosis described in paragraph (d)(3)(i)(B) must be by a physician who is employed by the Indian Health Service or the Department of Veterans Affairs or who is certified by a state medical board, and who must have a documented, ongoing physician-patient relationship with the claimant. Notwithstanding the conclusive effect given to certain evidence, nothing in this paragraph shall be construed as relieving a living claimant of the obligation to provide the Program with the forms of documentation required under paragraph (d)(3).

Subpart F—Uranium Millers

§ 79.50 Scope of subpart.

The regulations in this subpart define the eligibility criteria for compensation under section 5 of the Act pertaining to millers, i.e., uranium mill workers, and the nature of evidence that will be accepted as proof that a claimant satisfies such criteria. Section 5 of the Act provides for a payment of $100,000 to ''millers'' who contracted lung cancer, one of a limited number of nonmalignant respiratory diseases, renal cancer, or chronic renal disease, following employment for at least one year as a uranium mill worker in specified states during the period beginning January 1, 1942, and ending December 31, 1971.

§ 79.51 Definitions.

(a) *Chronic nephritis* means an inflammatory process of the kidneys resulting in chronic renal disease.

(b) *Chronic renal disease* means the chronic, progressive, and irreversible destruction of the nephrons. It is exhibited by renal atrophy and diminution of renal function.

(c) *Cor pulmonale* means heart disease, including hypertrophy of the right ventricle, due to pulmonary hypertension secondary to fibrosis of the lung.

(d) *Designated time period* means the period beginning on January 1, 1942, and ending on December 31, 1971.

(e) *Employment for at least one year* means employment for a total of at least one year (12 consecutive or cumulative months).

(f) *Fibrosis of the lung or pulmonary fibrosis* means chronic inflammation and scarring of the pulmonary interstitium and alveoli with collagen deposition and progressive thickening causing pulmonary impairment.

(g) *Kidney tubal tissue injury* means structural damage to the kidney tissues or tubules that results in chronic renal disease.

(h) *Lung cancer* means any physiological condition of the lung, trachea, or bronchus that is recognized under that name or nomenclature by the National Cancer Institute. The term includes in situ lung cancers.

(i) *Miller or uranium mill worker* means a person who operated or otherwise worked in a uranium mill.

(j) *National Institute for Occupational Safety and Health (NIOSH) certified ''B'' reader* means a physician who is certified as such by NIOSH. A list of certified ''B'' readers is available from the Radiation Exposure Compensation Program upon request.

(k) *Nonmalignant respiratory disease* means fibrosis of the lung, pulmonary fibrosis, cor pulmonale related to fibrosis of the lung, silicosis, and pneumoconiosis.

(l) *Pneumoconiosis* means a chronic lung disease resulting from inhalation and deposition in the lung of particulate matter, and the tissue reaction to the presence of the particulate matter.

(m) *Readily available documentation* means documents in the possession, custody, or control of the claimant or an immediate family member.

(n) *Renal cancer* means any physiological condition of the kidneys that is recognized under that name or nomenclature by the National Cancer Institute.

(o) *Silicosis* means a pneumoconiosis due to the inhalation of the dust of stone, sand, flint, or other materials containing silicon dioxide, characterized by the formation of pulmonary fibrotic changes.

(p) *Specified state* means Colorado, New Mexico, Arizona, Wyoming, South Dakota, Washington, Utah, Idaho, North Dakota, Oregon, or Texas. Additional states may be included, provided:

(1) An Atomic Energy Commission uranium mine was operated in such state at any time during the period beginning on January 1, 1942, and ending on December 31, 1971;

(2) The state submits an application to the Assistant Director (specified in 28 CFR 79.70(a)) to include such state; and

(3) The Assistant Director makes a determination to include such state.

(q) *Uranium mill* means any milling operation involving the processing of uranium ore or vanadium-uranium ore, including carbonate plants and acid leach plants. The term applies to ore-buying stations where ore was weighed and sampled prior to delivery to a mill for processing; ''upgrader'' or ''concentrator'' facilities located at the mill or at a remote location where uranium or vanadium-uranium ore was processed prior to delivery to a mill; and pilot plants where uranium ore or vanadium-uranium ore was processed.

(r) *Uranium mine* means any underground excavation, including ''dog holes,'' as well as open-pit, strip, rim, surface, or other aboveground mines the primary or significant purpose of which was the extraction of uranium ore or vanadium-uranium ore.

(s) *Written diagnosis by a physician* means a written determination of the nature of a disease made from a study of the signs and symptoms of a disease that is based on a physical examination of the patient, medical imaging or a chemical, microscopic, microbiologic, immunologic, or pathologic study of physiologic and functional tests, secretions, discharges, blood, or tissue. For purposes of satisfying the requirement of a ''written diagnosis by a physician'' for living claimants specified in §§ 79.54 and 79.55, a physician submitting a written diagnosis of a nonmalignant respiratory disease or lung cancer must be employed by the Indian Health Service or the Department of Veterans Affairs or be certified by a state medical board, and must have a documented, ongoing physician-patient relationship with the claimant. An ''ongoing physician-patient relationship'' can include referrals made to specialists from a primary care provider (and accepted by the primary care provider) for purposes of diagnosis or treatment.

§ 79.52 Criteria for eligibility.

To establish eligibility for compensation under this subpart, a claimant or eligible surviving beneficiary of a claimant must establish each of the following:

(a) The claimant was employed as a miller in a specified state;

(b) The claimant was so employed for at least one year (12 consecutive or cumulative months) during the period beginning on January 1, 1942, and ending on December 31, 1971; and

(c) The claimant contracted lung cancer, a nonmalignant respiratory disease, renal cancer, or chronic renal disease (including nephritis and kidney tubal tissue injury) following such employment.

§ 79.53 Proof of employment as a miller.

(a) The Department will accept, as proof of employment for the time period indicated, information contained in any of the following records:

(1) Records created by or gathered by the Public Health Service (PHS) in the course of any health studies of uranium workers during or including the period 1942–1990;

(2) Records of a uranium worker census performed by the PHS at various times during the period 1942–1990;

(3) Records of the Atomic Energy Commission (AEC), or any of its successor agencies; and

(4) Records of federally supported, health-related studies of uranium workers.

(b) The Program will presume that the employment history for the time period indicated in records listed in paragraph (a) is correct. If the claimant or eligible surviving beneficiary wishes to contest the accuracy of such records, then the claimant or eligible surviving beneficiary may provide one or more of the records identified in paragraph (c) of this section, and the Assistant Director will determine whether the employment history indicated in the records listed in paragraph (a) is correct.

(c) If the sources in paragraph (a) of this section do not contain information regarding the claimant's uranium mill employment history, do not contain sufficient information to establish employment for at least one year in a uranium mill during the specified time period to qualify under § 79.52(b), or if a claimant or eligible surviving beneficiary wishes to contest the accuracy of such records, then the claimant or eligible surviving beneficiary may submit records from any of the following sources, which the Assistant Director shall consider (in addition to any sources listed in paragraph (a) of this section) in order to

determine whether the claimant has established the requisite employment history:

(1) Records of any of the specified states, including records of state regulatory agencies, containing information on uranium mill workers and uranium mills;

(2) Records of any business entity that owned or operated a uranium mill, or its successor-in-interest;

(3) Records of the Social Security Administration reflecting the identity of the employer, the years and quarters of employment, and the wages received during each quarter;

(4) Federal or state income tax records that contain relevant statements regarding the claimant's employer and wages;

(5) Records containing factual findings by any governmental judicial body, state worker's compensation board, or any governmental administrative body adjudicating the claimant's rights to any type of benefits (which will be accepted only to prove the fact of and duration of employment in a uranium mill);

(6) Statements in medical records created during the period 1942–1971 indicating or identifying the claimant's employer and occupation;

(7) Records of an academic or scholarly study, not conducted in anticipation of or in connection with any litigation, and completed prior to 1990; or

(8) Any other contemporaneous record that indicates or identifies the claimant's occupation or employer.

(d) To the extent that the documents submitted from the sources identified in this section do not so indicate, the claimant or eligible surviving beneficiary must set forth under oath on the standard claim form the following information, if known:

(1) The names of the mill employers for which the claimant worked during the time period identified in the documents;

(2) The names and locations of any mills in which the claimant worked;

(3) The actual time period the claimant worked in each mill; and

(4) The claimant's occupation in each mill.

(e) The Program may, for the purpose of verifying information submitted pursuant to this section, require the claimant or any eligible surviving beneficiary to provide an authorization to release any record identified in this section, in accordance with the provisions of § 79.72(c).

(f) In determining whether a claimant satisfies the employment criteria of the Act, the Assistant Director shall resolve all reasonable doubt in favor of the claimant. If the Assistant Director concludes that the claimant has not satisfied the employment requirements of the Act, the claimant or eligible surviving beneficiary will be notified and afforded the opportunity, in accordance with the provisions of § 79.72(c), to submit additional records to establish that the statutory employment criteria are satisfied.

§ 79.54 Proof of lung cancer.

(a) In determining whether a claimant developed lung cancer following pertinent employment as a miller, the Assistant Director shall resolve all reasonable doubt in favor of the claimant. A conclusion that a claimant developed lung cancer must be supported by medical documentation. In cases where the claimant is deceased, the claimant's beneficiary may submit any form of medical documentation specified in paragraph (e) of this section. A living claimant also may submit any form of medical documentation. However, a living claimant must at a minimum submit the medical documentation required in paragraph (e)(2) of this section. In all cases, the Program will review submitted medical documentation, and will, in addition and where appropriate, review any pertinent records discovered within the sources identified in paragraphs (b), (c) and (d) of this section.

(b) Where appropriate, the Radiation Exposure Compensation Program will search the records of the PHS (including NIOSH), created or gathered during the course of any health study of uranium workers conducted or being conducted by these agencies, to determine whether those records contain proof of the claimant's medical condition. (In cases where the claimant is deceased, the Program will accept as proof of medical condition the verification of the PHS or NIOSH that it possesses medical records or abstracts of medical records of the claimant that contain a verified diagnosis of lung cancer.)

(c) If a claimant was diagnosed as having lung cancer in the State of Arizona, Colorado, Nevada, New Mexico, Utah, or Wyoming, and the claimant or eligible surviving beneficiary submits with the claim an Authorization To Release Medical or Other Information, valid in the state of diagnosis, that authorizes the Radiation Exposure Compensation Program to contact the appropriate state cancer or tumor registry, the Program will, where appropriate, request the relevant information from that registry and will review records that it obtains from the registry. (In cases where the claimant is deceased, the Program will accept as proof of medical condition verification from the state cancer or tumor registry that it possesses medical records or abstracts of medical records of the claimant that contain a verified diagnosis of lung cancer.)

(d) If medical records regarding the claimant were gathered during the course of any federally supported, health-related study of uranium workers, and the claimant or eligible surviving beneficiary submits with the claim an Authorization To Release Medical or Other Information that authorizes the Program to contact the custodian of the records of the study to determine if proof of the claimant's medical condition is contained in the records of the study, the Program will, where appropriate, request such records from that custodian and will review records that it obtains from the custodian. (In cases where the claimant is deceased, the Program will accept as proof of the claimant's medical condition such medical records or abstracts of medical records containing a verified diagnosis of lung cancer.)

(e)(1) A claimant or beneficiary may submit any of the following forms of medical documentation in support of a claim that the claimant contracted lung cancer. Such documentation will be most useful where it contains an explicit statement of diagnosis or such other information or data from which the appropriate authorities at the National Cancer Institute can make a diagnosis to a reasonable degree of medical certainty:

(i) Pathology report of tissue biopsy, including, but not limited to, specimens obtained by any of the following methods:

(A) Surgical resection;

(B) Endoscopic endobronchial or transbronchial biopsy;

(C) Bronchial brushings and washings;

(D) Pleural fluid cytology;

(E) Fine needle aspirate;

(F) Pleural biopsy;

(G) Sputum cytology;

(ii) Autopsy report;

(iii) Bronchoscopy report;

(iv) One of the following summary medical reports:

(A) Physician summary report;

(B) Hospital discharge summary report;

(C) Operative report;

(D) Radiation therapy summary report;

(E) Oncology summary or consultation report;

(v) Reports of radiographic studies, including:

(A) X-rays of the chest;

(B) Chest tomograms;

(C) Computer-assisted tomography (CT);

(D) Magnetic resonance imaging (MRI);

(vi) Death certificate, provided that it is signed by a physician at the time of death; or

(vii) Any type of documentation enumerated in paragraph (e)(2) of this section.

(2) Notwithstanding any other documentation provided, a living claimant must at a minimum provide the following medical documentation:

(i) Either:

(A) An arterial blood gas study administered at rest in a sitting position, or an exercise arterial blood gas test, reflecting values equal to or less than the values set forth in the Tables in Appendix B of this part; or

(B) A written diagnosis by a physician in accordance with § 79.51(s); and

(ii) One of the following:

(A) A chest x-ray on full-size film administered in accordance with standard techniques accompanied by:

(*1*) Interpretive reports of the x-ray by two NIOSH certified ''B'' readers, rating the film at quality 1 or 2 and classifying the existence of disease of category 1/0 or higher according to a 1980 report of the International Labor Office (known as the ''ILO'') or subsequent revisions; or

(*2*) Medical documentation interpreting the chest x-ray from a physician employed by the Indian Health Service or the Department of Veterans Affairs who has a documented, ongoing physician-patient relationship with the claimant (which may include referrals to physicians employed by the Indian Health Service or the Department of Veterans Affairs for the purposes of diagnosis or treatment);

(B) High-resolution computed tomography scans (commonly known as ''HRCT scans''), including computer assisted tomography scans (commonly known as ''CAT scans''), magnetic resonance imaging scans (commonly known as ''MRI scans''), and positron emission tomography scans (commonly known as ''PET scans''), and interpretive reports of such scans;

(C) Pathology reports of tissue biopsies; or

(D) Pulmonary function tests indicating restrictive lung function and consisting of three tracings recording the results of the forced expiratory volume in one second (FEV1) and the forced vital capacity (FVC) administered and reported in accordance with the Standardization of Spirometry—1987 Update by the American Thoracic Society, and reflecting values for FEV1 or FVC that are less than or equal to 80% of the predicted value for an individual of the claimant's age, sex, and height, as set forth in the Tables in Appendix A.

(f) The Assistant Director shall treat any documentation described in paragraph (e)(2)(i)(B) or paragraph (e)(2)(ii)(A) as conclusive evidence of the claimant's lung cancer; provided, however, that the Program may subject such documentation to a fair and random audit procedure to guarantee its authenticity and reliability for purposes of treating it as conclusive evidence; and provided further that, in order to be treated as conclusive evidence, a written diagnosis described in paragraph (e)(2)(i)(B) must be by a physician who is employed by the Indian Health Service or the Department of Veterans Affairs or who is certified by a state medical board, and who must have a documented, ongoing physician-patient relationship with the claimant. Notwithstanding the conclusive effect given to certain evidence, nothing in this paragraph shall be construed as relieving a living claimant of the obligation to provide the Program with the forms of documentation required under paragraph (e)(2).

§ 79.55 Proof of nonmalignant respiratory disease.

(a) In determining whether a claimant developed a nonmalignant respiratory disease following pertinent employment as a miller, the Assistant Director shall resolve all reasonable doubt in favor of the claimant. A conclusion that a claimant developed a nonmalignant respiratory disease must be supported by medical documentation. In cases where the claimant is deceased, the claimant's beneficiary may submit any form of medical documentation specified in paragraph (d)(1) of this section, and for proof of cor pulmonale must also submit one or more forms of documentation specified in paragraph (d)(2). A living claimant also may submit any form of medical documentation. However, a living claimant must at a minimum submit the medical documentation required in paragraph (d)(3) of this section, and for proof of cor pulmonale must also submit one or more forms of documentation specified in paragraph (d)(2). In all cases, the Program will review submitted medical documentation, and will, in addition and where appropriate, review any pertinent records discovered within the sources referred to in paragraphs (b) and (c) of this section. With respect to a deceased claimant, the Program will treat as equivalent to a diagnosis of pulmonary fibrosis any diagnosis of ''restrictive lung disease'' made by a physician employed by the Indian Health Service.

(b) Where appropriate, the Radiation Exposure Compensation Program will search the records of the PHS (including NIOSH), created or gathered during the course of any health study of uranium workers conducted or being conducted by these agencies, to determine whether those records contain proof of the claimant's medical condition. (In cases where the claimant is deceased, the Program will accept as proof of medical condition the verification of the PHS or NIOSH that it possesses medical records or abstracts of medical records of the claimant that contain a verified diagnosis of a nonmalignant respiratory disease.)

(c) If medical records regarding the claimant were gathered during the course of any federally supported, health-related study of uranium workers, and the claimant or eligible surviving beneficiary submits with the claim an Authorization To Release Medical or Other Information that authorizes the Program to contact the custodian of the records of the study to determine if proof of the claimant's medical condition is contained in the records of the study, the Program will, where appropriate, request such records from that custodian and will review records that it obtains from the custodian. (In cases where the claimant is deceased, the Program will accept as proof of the claimant's medical condition such medical records or abstracts of medical records containing a verified diagnosis of a nonmalignant respiratory disease.)

(d)(1) A claimant or beneficiary may submit any of the following forms of medical documentation in support of a claim that the claimant contracted a nonmalignant respiratory disease, including pulmonary fibrosis, fibrosis of the lung, cor pulmonale, silicosis, and pneumoconiosis. Such documentation will be most useful where it contains an explicit statement of diagnosis or such other information or data from which the appropriate authorities at the National Cancer Institute can make a diagnosis to a reasonable degree of medical certainty:

(i) Pathology report of tissue biopsy;

(ii) Autopsy report;

(iii) If an x-ray exists, the x-ray and interpretive reports of the x-ray by two NIOSH certified ''B'' readers classifying the existence of disease of category 1/0 or higher according to a 1980 report of the International Labor Office (known as the ''ILO''), or subsequent revisions;

(iv) If no x-rays exist, an x-ray report;

(v) Physician summary report;

(vi) Hospital discharge summary report;

(vii) Hospital admitting report;

(viii) Death certificate, provided that it is signed by a physician at the time of death; or

(ix) Any of the types of documentation enumerated in paragraphs (d)(2) and (d)(3) of this section.

(2) In order to demonstrate that the claimant developed cor pulmonale related to fibrosis of the lung, the claimant or beneficiary must, at a minimum, submit one or more of the following medical records:

(i) Right heart catheterization;

(ii) Cardiology summary or consultation report;

(iii) Electrocardiogram;

(iv) Echocardiogram;

(v) Physician summary report;

(vi) Hospital discharge report;

(vii) Autopsy report;

(viii) Report of physical examination;

(ix) Death certificate, provided that it is signed by a physician at the time of death.

(3) Notwithstanding any other documentation provided, a living claimant must at a minimum provide the following medical documentation:

(i) Either:

(A) An arterial blood gas study administered at rest in a sitting position, or an exercise arterial blood gas test, reflecting values equal to or less than the values set forth in the Tables in Appendix B of this part; or

(B) A written diagnosis by a physician in accordance with § 79.51(s); and

(ii) One of the following:

(A) A chest x-ray on full-size film administered in accordance with standard techniques accompanied by:

(*1*) Interpretive reports of the x-ray by two NIOSH certified ''B'' readers, rating the film at quality 1 or 2 and classifying the existence of disease of category 1/0 or higher according to a 1980 report of the International Labor Office (known as the ''ILO'') or subsequent revisions; or

(*2*) Medical documentation interpreting the chest x-ray from a physician employed by the Indian Health Service or the Department of Veterans Affairs who has a documented, ongoing physician-patient relationship with the claimant (which may include referrals to physicians employed by the Indian Health Service or the Department of Veterans Affairs for the purposes of diagnosis or treatment);

(B) High-resolution computed tomography scans (commonly known as ''HRCT scans''), including computer-assisted tomography scans (commonly known as ''CAT scans''), magnetic resonance imaging scans (commonly known as ''MRI scans''), and positron emission tomography scans (commonly known as ''PET scans''), and interpretive reports of such scans;

(C) Pathology reports of tissue biopsies; or

(D) Pulmonary function tests indicating restrictive lung function and consisting of three tracings recording the results of the forced expiratory volume in one second (FEV1) and the forced vital capacity (FVC) administered and reported in accordance with the Standardization of Spirometry—1987 Update by the American Thoracic Society, and reflecting values for FEV1 or FVC that are less than or equal to 80% of the predicted value for an individual of the claimant's age, sex, and height, as set forth in the Tables in Appendix A.

(e) The Assistant Director shall treat any documentation described in paragraph (d)(3)(i)(B) or paragraph (d)(3)(ii)(A) of this section as conclusive evidence of the claimant's nonmalignant respiratory disease; provided, however, that the Program may subject such documentation to a fair and random audit to guarantee its authenticity and reliability for purposes of treating it as conclusive evidence; and provided further that, in order to be treated as conclusive evidence, a written diagnosis described in paragraph (d)(3)(i)(B) must be by a physician who is employed by the Indian Health Service or the Department of Veterans Affairs or who is certified by a state medical board, and who must have a documented, ongoing physician-patient relationship with the claimant. Notwithstanding the conclusive effect given to certain evidence, nothing in this paragraph shall be construed as relieving a living claimant of the obligation to provide the Program with the forms of documentation required under paragraph (d)(3).

§ 79.56 Proof of renal cancer.

(a) In determining whether a claimant developed renal cancer following pertinent employment as a miller, the Assistant Director shall resolve all reasonable doubt in favor of the claimant. A conclusion that a claimant developed renal cancer must be supported by medical documentation. In all cases, the Program will review submitted medical documentation, and will, in addition and where appropriate, review any pertinent records discovered within the sources referred to in paragraphs (b) and (c) of this section.

(b) Where appropriate, the Radiation Exposure Compensation Program will search the records of the PHS (including NIOSH), created or gathered during the course of any health study of uranium workers conducted or being conducted by these agencies, to determine whether those records contain proof of the claimant's medical condition. The Program will accept as proof of medical condition the verification of the PHS or NIOSH that it possesses medical records or abstracts of medical records of the claimant that contain a verified diagnosis of renal cancer.

(c) If a claimant was diagnosed as having renal cancer in the State of Arizona, Colorado, Nevada, New Mexico, Utah, or Wyoming, and the claimant or eligible surviving beneficiary submits with the claim an Authorization To Release Medical or Other Information, valid in the state of diagnosis, that authorizes the Radiation Exposure Compensation Program to contact the appropriate state cancer or tumor registry, the Program will, where appropriate, request the relevant information from that registry and will review records that it obtains from the registry. The Program will accept as proof of medical condition verification from the state cancer or tumor registry that it possesses medical records or abstracts of medical records of the claimant that contain a verified diagnosis of renal cancer.

(d) If medical records regarding the claimant were gathered during the course of any federally supported, health-related study of uranium workers, and the claimant or eligible surviving beneficiary submits with the claim an Authorization To Release Medical or Other Information that authorizes the Program to contact the custodian of the records of the study to determine if proof of the claimant's medical condition is contained in the records of the study, the Program will, where appropriate, request such records from that custodian and will review records that it obtains from the custodian. The Program will accept as proof of the claimant's medical condition such medical records or abstracts of medical records containing a verified diagnosis of renal cancer.

(e) A claimant or beneficiary may submit any of the following forms of medical documentation in support of a claim that the claimant contracted renal cancer. Such documentation will be most useful where it contains an explicit statement of diagnosis or such other information or data from which the appropriate authorities at the National Cancer Institute can make a diagnosis to a reasonable degree of medical certainty:

(1) Pathology report of tissue biopsy or resection;

(2) Autopsy report;

(3) One of the following summary medical reports:

(i) Physician summary report;

(ii) Hospital discharge summary report;

(iii) Operative report;

(iv) Radiotherapy summary report;

(v) Medical oncology summary or consultation report;

(4) Report of one of the following radiology examinations:

(i) Computerized tomography (CT) scan;

(ii) Magnetic resonance imaging (MRI); or

(5) Death certificate, provided that it is signed by a physician at the time of death.

§ 79.57 Proof of chronic renal disease.

(a) In determining whether a claimant developed chronic renal disease following pertinent employment as a miller, the Assistant Director shall resolve all reasonable doubt in favor of the claimant. A conclusion that a claimant developed chronic renal disease must be supported by medical documentation. The Assistant Director shall not conclude that a claimant developed chronic renal disease if there is evidence of any of the following:

(1) Volume depletion as a cause of elevated creatinine;

(2) Urinary obstruction as a cause of elevated creatinine;

(3) Diabetes mellitus; or

(4) Diabetic nephropathy (by pathology report of tissue biopsy or autopsy, or heavy proteinuria in diabetic patient).

(b) A claimant or beneficiary may submit any of the following forms of medical documentation in support of a claim that the claimant contracted chronic renal disease. Such documentation will be most useful where it contains an explicit statement of diagnosis or such other information or data from which the appropriate authorities at the National Cancer Institute can make a diagnosis to a reasonable degree of medical certainty.

(1) Pathology report of tissue biopsy;

(2) If blood or renal function tests exist:

(i) Plasma creatinine values greater than age and gender adjusted normal values; and

(ii) Glomerular filtration tests (using either creatinine or iothalamate clearance) with values less than age and gender adjusted normal values; and

(iii) Bilateral small kidneys by ultrasound, CT scan, or MRI scan with parenchymal changes consistent with chronic renal disease;

(3) Autopsy report;

(4) Physician summary report;

(5) Hospital discharge summary report;

(6) Hospital admitting report; or

(7) Death certificate, provided that it is signed by a physician at the time of death.

Subpart G—Ore Transporters

§ 79.60 Scope of subpart.

The regulations in this subpart define the eligibility criteria for compensation under section 5 of the Act pertaining to uranium or vanadium-uranium ore transporters and the nature of evidence that will be accepted as proof that a claimant satisfies such criteria. Section 5 of the Act provides for a payment of $100,000 to persons who contracted lung cancer, one of a limited number of nonmalignant respiratory diseases, renal cancer, or chronic renal disease, following employment for at least one year as a transporter of uranium ore or vanadium-uranium ore from a uranium mine or uranium mill located in a specified state during the period beginning January 1, 1942, and ending December 31, 1971.

§ 79.61 Definitions.

(a) *Chronic nephritis* means an inflammatory process of the kidneys resulting in chronic renal disease.

(b) *Chronic renal disease* means the chronic, progressive, and irreversible destruction of the nephrons. It is exhibited by renal atrophy and diminution of renal function.

(c) *Cor pulmonale* means heart disease, including hypertrophy of the right ventricle, due to pulmonary hypertension secondary to fibrosis of the lung.

(d) *Designated time period* means the period beginning on January 1, 1942, and ending on December 31, 1971.

(e) *Employment as an ore transporter* means employment involving the transporting or hauling of uranium ore or vanadium-uranium ore from a uranium mine or uranium mill, including the transportation or hauling of ore from an ore buying station, ''upgrader,'' ''concentrator'' facility, or pilot plant area of a mill by means of truck, rail or barge.

(f) *Employment for at least one year* means employment for a total of at least one year (12 consecutive or cumulative months).

(g) *Fibrosis of the lung or pulmonary fibrosis* means chronic inflammation and scarring of the pulmonary interstitium and alveoli with collagen deposition and progressive thickening causing pulmonary impairment.

(h) *Kidney tubal tissue injury* means structural damage to the kidney tissues or tubules that results in chronic renal disease.

(i) *Lung cancer* means any physiological condition of the lung, trachea, or bronchus that is recognized under that name or nomenclature by the National Cancer Institute. The term includes in situ lung cancers.

(j) *National Institute for Occupational Safety and Health (NIOSH) certified ''B'' reader* means a physician who is certified as such by NIOSH. A list of certified ''B'' readers is available from the Radiation Exposure Compensation Program upon request.

(k) *Nonmalignant respiratory disease* means fibrosis of the lung, pulmonary fibrosis, cor pulmonale related to fibrosis of the lung, silicosis, and pneumoconiosis.

(l) *Pneumoconiosis* means a chronic lung disease resulting from inhalation and deposition in the lung of particulate matter, and the tissue reaction to the presence of the particulate matter.

(m) *Readily available documentation* means documents in the possession, custody, or control of the claimant or an immediate family member.

(n) *Renal cancer* means any physiological condition of the kidneys that is recognized under that name or nomenclature by the National Cancer Institute.

(o) *Silicosis* means a pneumoconiosis due to the inhalation of the dust of stone, sand, flint or other materials containing silicon dioxide, characterized by the formation of pulmonary fibrotic changes.

(p) *Specified state* means Colorado, New Mexico, Arizona, Wyoming, South Dakota, Washington, Utah, Idaho, North Dakota, Oregon, or Texas. Additional states may be included, provided:

(1) An Atomic Energy Commission uranium mine was operated in such state at any time during the period beginning on January 1, 1942, and ending on December 31, 1971;

(2) The state submits an application to the Assistant Director (specified in 28 CFR 79.70(a)) to include such state; and

(3) The Assistant Director makes a determination to include such state.

(q) *Uranium mill* means any milling operation involving the processing of uranium ore or vanadium-uranium ore, including carbonate plants and acid leach plants. The term applies to ore-buying stations where ore was weighed and sampled prior to delivery to a mill for processing; ''upgrader'' or ''concentrator'' facilities located at the mill or at a remote location where uranium or vanadium-uranium ore was processed prior to delivery to a mill; and pilot plants where uranium ore or vanadium-uranium ore was processed.

(r) *Uranium mine* means any underground excavation, including ''dog holes,'' as well as open-pit, strip, rim, surface, or other aboveground mines the primary or significant purpose of which was the extraction of uranium ore or vanadium-uranium ore.

(s) *Written diagnosis by a physician* means a written determination of the nature of a disease made from a study of the signs and symptoms of a disease that is based on a physical examination of the patient, medical imaging or a chemical, microscopic, microbiologic, immunologic, or pathologic study of physiologic and functional tests, secretions, discharges, blood, or tissue. For purposes of satisfying the requirement of a ''written diagnosis by a physician'' for living claimants specified in §§ 79.64 and 79.65, a physician submitting a written diagnosis of a nonmalignant respiratory disease or lung cancer must be employed by the Indian Health Service or the Department of Veterans Affairs or be certified by a state medical board, and must have a documented, ongoing physician-patient relationship with the claimant. An ''ongoing physician-patient relationship'' can include referrals made to specialists from a primary care provider (and accepted by the primary care provider) for purposes of diagnosis or treatment.

§ 79.62 Criteria for eligibility.

To establish eligibility for compensation under this subpart, a claimant or eligible surviving beneficiary of a claimant must establish each of the following:

(a) The claimant was employed as an ore transporter in a specified state;

(b) The claimant was so employed for at least one year (12 consecutive or cumulative months) during the period beginning on January 1, 1942, and ending on December 31, 1971; and

(c) The claimant contracted lung cancer, a nonmalignant respiratory disease, renal cancer, or chronic renal disease (including nephritis and kidney tubal tissue injury) following such employment.

§ 79.63 Proof of employment as an ore transporter.

(a) The Department will accept, as proof of employment for the time period indicated, information contained in any of the following records:

(1) Records created by or gathered by the Public Health Service (PHS) in the course of any health studies of uranium workers during or including the period 1942–1990;

(2) Records of a uranium worker census performed by the PHS at various times during the period 1942–1990;

(3) Records of the Atomic Energy Commission (AEC), or any of its successor agencies; and

(4) Records of federally supported, health-related studies of uranium workers.

(b) The employment history for the time period indicated in such records will be presumed to be correct. If the claimant or eligible surviving beneficiary wishes to contest the accuracy of such records, then the claimant or eligible surviving beneficiary may provide one or more of the records identified in paragraph (c) of this section, and the Assistant Director will determine whether the employment history indicated in the records listed in paragraph (a) is correct.

(c) If the sources in paragraph (a) of this section do not contain information regarding the claimant's ore transporting employment history, do not contain sufficient information to establish employment for at least one year as an ore transporter during the specified time period to qualify under § 79.62(b), or if a claimant or eligible surviving beneficiary wishes to contest the accuracy of such records, then the claimant or eligible surviving beneficiary may submit records from any of the following sources, which the Assistant Director shall consider (in addition to any sources listed in paragraph (a) of this section) in order to determine whether the claimant has established the requisite employment history:

(1) Records of any of the specified states, including records of state regulatory agencies, containing information on uranium ore transporters and ore-transporting companies;

(2) Records of any business entity that owned or operated an ore-transporting company, or its successor-in-interest;

(3) Records of the Social Security Administration reflecting the identity of the employer, the years and quarters of employment, and the wages received during each quarter;

(4) Federal or state income tax records that contain relevant statements regarding the claimant's employer and wages;

(5) Records containing factual findings by any governmental judicial body, state worker's compensation board, or any governmental administrative body adjudicating the claimant's rights to any type of benefits (which will be accepted only to prove the fact of and duration of employment as an ore transporter);

(6) Statements in medical records created during the period 1942–1971 indicating or identifying the claimant's employer and occupation;

(7) Records of an academic or scholarly study, not conducted in anticipation of or in connection with any litigation, and completed prior to 1990; or

(8) Any other contemporaneous record that indicates or identifies the claimant's occupation or employer.

(d) To the extent that the documents submitted from the sources identified in this section do not so indicate, the claimant or eligible surviving beneficiary must set forth under oath on the standard claim form the following information, if known:

(1) The name or other identifying symbol of each employer for which the claimant worked during the time period identified in the documents;

(2) The name of the mine or mill from which uranium or uranium-vanadium ore was transported;

(3) The county and state in which the mine or mill was located;

(4) The actual time period the claimant worked as an ore transporter; and

(5) The method of transportation used to transport the ore.

(e) The Program may, for the purpose of verifying information submitted pursuant to this section, require the claimant or any eligible surviving beneficiary to provide an authorization to release any record identified in this section, in accordance with the provisions of § 79.72(c).

(f) In determining whether a claimant satisfies the employment criteria of the Act, the Assistant Director shall resolve all reasonable doubt in favor of the claimant. If the Assistant Director concludes that the claimant has not satisfied the employment requirements of the Act, the claimant or eligible surviving beneficiary will be notified and afforded the opportunity, in accordance with the provisions of § 79.72(c), to submit additional records to establish that the statutory employment criteria are satisfied.

§ 79.64 Proof of lung cancer.

(a) In determining whether a claimant developed lung cancer following pertinent employment as an ore transporter, the Assistant Director shall resolve all reasonable doubt in favor of the claimant. A conclusion that a claimant developed lung cancer must be supported by medical documentation. In cases where the claimant is deceased, the claimant's beneficiary may submit any form of medical documentation specified in paragraph (e) of this

section. A living claimant also may submit any form of medical documentation. However, a living claimant must at a minimum submit the medical documentation required in paragraph (e)(2) of this section. In all cases, the Program will review submitted medical documentation, and will, in addition and where appropriate, review any pertinent records discovered within the sources identified in paragraphs (b), (c), and (d) of this section.

(b) Where appropriate, the Radiation Exposure Compensation Program will search the records of the PHS (including NIOSH), created or gathered during the course of any health study of uranium workers conducted or being conducted by these agencies, to determine whether those records contain proof of the claimant's medical condition. (In cases where the claimant is deceased, the Program will accept as proof of medical condition the verification of the PHS or NIOSH that it possesses medical records or abstracts of medical records of the claimant that contain a verified diagnosis of lung cancer.)

(c) If a claimant was diagnosed as having lung cancer in the State of Arizona, Colorado, Nevada, New Mexico, Utah or Wyoming, and the claimant or eligible surviving beneficiary submits with the claim an Authorization To Release Medical or Other Information, valid in the state of diagnosis, that authorizes the Radiation Exposure Compensation Program to contact the appropriate state cancer or tumor registry, the Program will, where appropriate, request the relevant information from that registry and will review records that it obtains from the registry. (In cases where the claimant is deceased, the Program will accept as proof of medical condition verification from the state cancer or tumor registry that it possesses medical records or abstracts of medical records of the claimant that contain a verified diagnosis of lung cancer.)

(d) If medical records regarding the claimant were gathered during the course of any federally supported, health-related study of uranium workers, and the claimant or eligible surviving beneficiary submits with the claim an Authorization To Release Medical or Other Information that authorizes the Program to contact the custodian of the records of the study to determine if proof of the claimant's medical condition is contained in the records of the study, the Program will, where appropriate, request such records from that custodian and will review records that it obtains from the custodian. (In cases where the claimant is deceased, the Program will accept as proof of the claimant's medical condition such medical records or abstracts of medical records containing a verified diagnosis of lung cancer.)

(e)(1) A claimant or beneficiary may submit any of the following forms of medical documentation in support of a claim that the claimant contracted lung cancer. Such documentation will be most useful where it contains an explicit statement of diagnosis or such other information or data from which the appropriate authorities at the National Cancer Institute can make a diagnosis to a reasonable degree of medical certainty:

(i) Pathology report of tissue biopsy, including, but not limited to, specimens obtained by any of the following methods:

(A) Surgical resection;

(B) Endoscopic endobronchial or transbronchial biopsy;

(C) Bronchial brushings and washings;

(D) Pleural fluid cytology;

(E) Fine needle aspirate;

(F) Pleural biopsy;

(G) Sputum cytology;

(ii) Autopsy report;

(iii) Bronchoscopy report;

(iv) One of the following summary medical reports:

(A) Physician summary report;

(B) Hospital discharge summary report;

(C) Operative report;

(D) Radiation therapy summary report;

(E) Oncology summary or consultation report;

(v) Reports of radiographic studies, including:

(A) X-rays of the chest;

(B) Chest tomograms;

(C) Computer-assisted tomography (CT);

(D) Magnetic resonance imaging (MRI);

(vi) Death certificate, provided that it is signed by a physician at the time of death; or

(vii) Any of the forms of documentation enumerated in paragraph (e)(2) of this section.

(2) Notwithstanding any other documentation provided, a living claimant must at a minimum provide the following medical documentation:

(i) Either:

(A) An arterial blood gas study administered at rest in a sitting position, or an exercise arterial blood gas test, reflecting values equal to or less than the values set forth in the Tables in Appendix B of this part; or

(B) A written diagnosis by a physician in accordance with § 79.61(s); and

(ii) One of the following:

(A) A chest x-ray on full-size film administered in accordance with standard techniques accompanied by:

(*1*) Interpretive reports of the x-ray by two NIOSH certified ''B'' readers, rating the film at quality 1 or 2 and classifying the existence of disease of category 1/0 or higher according to a 1980 report of the International Labor Office (known as the ''ILO'') or subsequent revisions; or

(*2*) Medical documentation interpreting the chest x-ray from a physician employed by the Indian Health Service or the Department of Veterans Affairs who has a documented, ongoing physician-patient relationship with the claimant (which may include referrals to physicians employed by the Indian Health Service or the Department of Veterans Affairs for the purposes of diagnosis or treatment);

(B) High resolution computed tomography scans (commonly known as ''HRCT scans''), including computer-assisted tomography scans (commonly known as ''CAT scans''), magnetic resonance imaging scans (commonly known as ''MRI scans''), and positron emission tomography scans (commonly known as ''PET scans''), and interpretive reports of such scans;

(C) Pathology reports of tissue biopsies; or

(D) Pulmonary function tests indicating restrictive lung function and consisting of three tracings recording the results of the forced expiratory volume in one second (FEV1) and the forced vital capacity (FVC) administered and reported in accordance with the Standardization of Spirometry—1987 Update by the American Thoracic Society, and reflecting values for FEV1 or FVC that are less than or equal to 80% of the predicted value for an individual of the claimant's age, sex, and height, as set forth in the Tables in Appendix A.

(f) The Assistant Director shall treat any documentation described in paragraph (e)(2)(i)(B) or paragraph (e)(2)(ii)(A) of this section as conclusive evidence of the claimant's lung cancer; provided, however, that the Program may subject such documentation to a fair and random audit procedure to guarantee its authenticity and reliability for purposes of treating it as conclusive evidence; and provided further that, in order to be treated as conclusive evidence, a written diagnosis described in paragraph (e)(2)(i)(B) must be by a physician who is employed by the Indian Health Service or the Department of Veterans Affairs or who is certified by a state medical board, and who must have a documented, ongoing physician-patient relationship with the claimant.

Notwithstanding the conclusive effect given to certain evidence, nothing in this paragraph shall be construed as relieving a living claimant of the obligation to provide the Program with the forms of documentation required under paragraph (e)(2).

§ 79.65 Proof of nonmalignant respiratory disease.

(a) In determining whether a claimant developed a nonmalignant respiratory disease following pertinent employment as an ore transporter, the Assistant Director shall resolve all reasonable doubt in favor of the claimant. A conclusion that a claimant developed a nonmalignant respiratory disease must be supported by medical documentation. In cases where the claimant is deceased, the claimant's beneficiary may submit any form of medical documentation specified in paragraph (d)(1) of this section, and for proof of cor pulmonale must also submit one or more forms of documentation specified in paragraph (d)(2). A living claimant also may submit any form of medical documentation. However, a living claimant must at a minimum submit the medical documentation required in paragraph (d)(3) of this section, and for proof of cor pulmonale must also submit one or more forms of documentation specified in paragraph (d)(2). In all cases, the Program will review submitted medical documentation, and will, in addition and where appropriate, review any pertinent records discovered within the sources referred to in paragraphs (b) and (c) of this section. With respect to a deceased claimant, the Program will treat as equivalent to a diagnosis of pulmonary fibrosis any diagnosis of ''restrictive lung disease'' made by a physician employed by the Indian Health Service.

(b) Where appropriate, the Radiation Exposure Compensation Program will search the records of the PHS (including NIOSH), created or gathered during the course of any health study of uranium workers conducted or being conducted by these agencies, to determine whether those records contain proof of the claimant's medical condition. (In cases where the claimant is deceased, the Program will accept as proof of medical condition the verification of the PHS or NIOSH that it possesses medical records or abstracts of medical records of the claimant that contain a verified diagnosis of a nonmalignant respiratory disease.)

(c) If medical records regarding the claimant were gathered during the course of any federally supported, health-related study of uranium workers, and the claimant or eligible surviving beneficiary submits with the claim an Authorization To Release Medical or Other Information that authorizes the Program to contact the custodian of the records of the study to determine if proof of the claimant's medical condition is contained in the records of the study, the Program will, where appropriate, request such records from that custodian and will review records that it obtains from the custodian. (In cases where the claimant is deceased, the Program will accept as proof of the claimant's medical condition such medical records or abstracts of medical records containing a verified diagnosis of a nonmalignant respiratory disease.)

(d)(1) A claimant or beneficiary may submit any of the following forms of medical documentation in support of a claim that the claimant contracted a nonmalignant respiratory disease, including pulmonary fibrosis, fibrosis of the lung, cor pulmonale, silicosis and pneumoconiosis. Such documentation will be most useful where it contains an explicit statement of diagnosis or such other information or data from which the appropriate authorities at the National Cancer Institute can make a diagnosis to a reasonable degree of medical certainty.

(i) Pathology report of tissue biopsy;

(ii) Autopsy report;

(iii) If an x-ray exists, the x-ray and interpretive reports of the x-ray by two NIOSH certified ''B'' readers classifying the existence of disease of category 1/0 or higher according to a 1980 report of the International Labor Office (known as the ''ILO''), or subsequent revisions;

(iv) If no x-rays exist, an x-ray report;

(v) Physician summary report;

(vi) Hospital discharge summary report;

(vii) Hospital admitting report;

(viii) Death certificate, provided that it is signed by a physician at the time of death; or

(ix) Any form of documentation enumerated in paragraphs (d)(2) and (d)(3) of this section.

(2) In order to demonstrate that the claimant developed cor pulmonale related to fibrosis of the lung, the claimant or beneficiary must, at a minimum, submit one or more of the following medical records:

(i) Right heart catheterization;

(ii) Cardiology summary or consultation report;

(iii) Electrocardiogram;

(iv) Echocardiogram;

(v) Physician summary report;

(vi) Hospital discharge report;

(vii) Autopsy report;

(viii) Report of physical examination;

(ix) Death certificate, provided that it is signed by a physician at the time of death.

(3) Notwithstanding any other documentation provided, a living claimant must at a minimum provide the following medical documentation:

(i) Either:

(A) An arterial blood gas study administered at rest in a sitting position, or an exercise arterial blood gas test, reflecting values equal to or less than the values set forth in the Tables in Appendix B of this part; or

(B) A written diagnosis by a physician in accordance with § 79.61(s); and

(ii) One of the following:

(A) A chest x-ray on full-size film administered in accordance with standard techniques accompanied by:

(*1*) Interpretive reports of the x-ray by two NIOSH certified ''B'' readers, rating the film at quality 1 or 2 and classifying the existence of disease of category 1/0 or higher according to a 1980 report of the International Labor Office (known as the ''ILO''), or subsequent revisions; or

(*2*) Medical documentation interpreting the chest x-ray from a physician employed by the Indian Health Service or the Department of Veterans Affairs who has a documented, ongoing physician-patient relationship with the claimant (which may include referrals to physicians employed by the Indian Health Service or the Department of Veterans Affairs for the purposes of diagnosis or treatment);

(B) High-resolution computed tomography scans (commonly known as ''HRCT scans''), including computer-assisted tomography scans (commonly known as ''CAT scans''), magnetic resonance imaging scans (commonly known as ''MRI scans''), and positron emission tomography scans (commonly known as ''PET scans''), and interpretive reports of such scans;

(C) Pathology reports of tissue biopsies; or

(D) Pulmonary function tests indicating restrictive lung function and consisting of three tracings recording the results of the forced expiratory volume in one second (FEV1) and the forced vital capacity (FVC) administered and reported in accordance with the Standardization of Spirometry—1987 Update by the American Thoracic Society, and reflecting values for FEV1 or FVC that are less than or equal to 80% of the predicted value for an individual of the claimant's age, sex, and height, as set forth in the Tables in Appendix A.

(e) The Assistant Director shall treat any documentation described in paragraph (d)(3)(i)(B) or paragraph (d)(3)(ii)(A) as conclusive evidence of

the claimant's nonmalignant respiratory disease; provided, however, that the Program may subject such documentation to a fair and random audit to guarantee its authenticity and reliability for purposes of treating it as conclusive evidence; and provided further that, in order to be treated as conclusive evidence, a written diagnosis described in paragraph (d)(3)(i)(B) must be by a physician who is employed by the Indian Health Service or the Department of Veterans Affairs or who is certified by a state medical board, and who must have a documented, ongoing physician-patient relationship with the claimant. Notwithstanding the conclusive effect given to certain evidence, nothing in this paragraph shall be construed as relieving a living claimant of the obligation to provide the Program with the forms of documentation required under paragraph (d)(3).

§ 79.66 Proof of renal cancer.

(a) In determining whether a claimant developed renal cancer following pertinent employment as an ore transporter, the Assistant Director shall resolve all reasonable doubt in favor of the claimant. A conclusion that a claimant developed renal cancer must be supported by medical documentation. In all cases, the Program will review submitted medical documentation, and, in addition and where appropriate, will review any pertinent records discovered within the sources referred to in paragraphs (b) and (c) of this section.

(b) Where appropriate, the Radiation Exposure Compensation Program will search the records of the PHS (including NIOSH), created or gathered during the course of any health study of uranium workers conducted or being conducted by these agencies, to determine whether those records contain proof of the claimant's medical condition. The Program will accept as proof of medical condition the verification of the PHS or NIOSH that it possesses medical records or abstracts of medical records of the claimant that contain a verified diagnosis of renal cancer.

(c) If a claimant was diagnosed as having renal cancer in the State of Arizona, Colorado, Nevada, New Mexico, Utah or Wyoming, and the claimant or eligible surviving beneficiary submits with the claim an Authorization To Release Medical or Other Information, valid in the state of diagnosis, that authorizes the Radiation Exposure Compensation Program to contact the appropriate state cancer or tumor registry, the Program will, where appropriate, request the relevant information from that registry and will review records that it obtains from the registry. The Program will accept as proof of medical condition verification from the state cancer or tumor registry that it possesses medical records or abstracts of medical records of the claimant that contain a verified diagnosis of renal cancer.

(d) If medical records regarding the claimant were gathered during thecourse of any federally supported, health-related study of uranium workers, and the claimant or eligible surviving beneficiary submits with the claim an Authorization To Release Medical or Other Information that authorizes the Program to contact the custodian of the records of the study to determine if proof of the claimant's medical condition is contained in the records of the study, the Program will, where appropriate, request such records from that custodian and will review records that it obtains from the custodian. The Program will accept as proof of the claimant's medical condition such medical records or abstracts of medical records containing a verified diagnosis of renal cancer.

(e) A claimant or beneficiary may submit any of the following forms of medical documentation in support of a claim that the claimant contracted renal cancer. Such documentation will be most useful where it contains an explicit statement of diagnosis or such other information or data from which the appropriate authorities at the National Cancer Institute can make a diagnosis to a reasonable degree of medical certainty:

(1) Pathology report of tissue biopsy or resection;

(2) Autopsy report;

(3) One of the following summary medical reports:

(i) Physician summary report;

(ii) Hospital discharge summary report;

(iii) Operative report;

(iv) Radiotherapy summary report;

(v) Medical oncology summary or consultation report;

(4) Report of one of the following radiology examinations:

(i) Computerized tomography (CT) scan;

(ii) Magnetic resonance imaging (MRI); or

(5) Death certificate, provided that it is signed by a physician at the time of death.

§ 79.67 Proof of chronic renal disease.

(a) In determining whether a claimant developed chronic renal disease following pertinent employment as an ore transporter, the Assistant Director shall resolve all reasonable doubt in favor of the claimant. A conclusion that a claimant developed chronic renal disease must be supported by medical documentation. The Assistant Director shall not conclude that a claimant developed chronic renal disease if there is evidence of any of the following:

(1) Volume depletion as a cause of elevated creatinine;

(2) Urinary obstruction as a cause of elevated creatinine;

(3) Diabetes mellitus; or

(4) Diabetic nephropathy (by pathology report of tissue biopsy or autopsy, or heavy proteinuria in diabetic patient).

(b) A claimant or beneficiary may submit any of the following forms of medical documentation in support of a claim that the claimant contracted chronic renal disease. Such documentation will be most useful where it contains an explicit statement of diagnosis or such other information or data from which the appropriate authorities at the National Cancer Institute can make a diagnosis to a reasonable degree of medical certainty.

(1) Pathology report of tissue biopsy;

(2) If blood or renal function tests exist:

(i) Plasma creatinine values greater than age and gender adjusted normal values; and

(ii) Glomerular filtration tests (using either creatinine or iothalamate clearance) with values less than age and gender adjusted normal values; and

(iii) Bilateral small kidneys by ultrasound, CT scan, or MRI scan with parenchymal changes consistent with chronic renal disease;

(3) Autopsy report;

(4) Physician summary report;

(5) Hospital discharge summary report;

(6) Hospital admitting report; or

(7) Death certificate, provided that it is signed by a physician at the time of death.

Subpart H—Procedures

* * * * *

§ 79.74 Representatives and fees.

(a) *Representation.* In submitting and presenting a claim to the Program, a claimant or beneficiary may, but need not, be represented by an attorney or by a representative of an Indian tribe. To the extent that resources are available, the Assistant Director will provide assistance to all persons who file claims for compensation.

(b) *Fees.* (1) Notwithstanding any contract, the representative of a claimant or beneficiary, along with any

assistants or experts retained on behalf of the claimant or beneficiary, may not receive from a claimant or beneficiary any fee for services rendered, and costs incurred, in connection with an unsuccessful claim, and, except as provided in paragraph (b)(2) of this section, may receive from a claimant or beneficiary no more than two percent of the total award for all services rendered, and costs incurred, in connection with a successful claim.

(2)(i) If a representative before July 10, 2000, entered into a contract with the claimant or beneficiary for services with respect to a particular claim, then that representative may receive up to ten percent of the total award for services rendered in connection with that claim.

(ii) If a representative resubmits a previously denied claim, then that representative may receive up to ten percent of the total award to the claimant or beneficiary for services rendered in connection with that claim. Resubmitted claims include claims that were previously denied and refiled under the Act, claims administratively appealed to the designated Appeals Officer, and actions for review filed in United States District Court.

(3) Any violation of this subsection shall result in a fine of not more than $5,000.

(c) *Attorney qualifications.* An attorney may not represent a claimant or beneficiary unless the attorney is a member in good standing of the bar of the highest court of a state. If a claimant or beneficiary is represented by an attorney, then the attorney must submit the following documents to the Program along with the claim:

(1) A statement of the attorney's membership in good standing of the bar of the highest court of a state; and

(2) A signed representation agreement, retainer agreement, fee agreement, or contract, documenting the attorney's authorization to represent the claimant or beneficiary.

Dated: July 24, 2002.

John Ashcroft,

Attorney General.

[FR Doc. 02–19222 Filed 8–6–02; 8:45 am]

BILLING CODE 4410–12–P

Reader Aids

Federal Register

Vol. 67, No. 152

Wednesday, August 7, 2002

CUSTOMER SERVICE AND INFORMATION

Federal Register/Code of Federal Regulations	
General Information, indexes and other finding aids	**202–523–5227**
Laws	**523–5227**
Presidential Documents	
Executive orders and proclamations	**523–5227**
The United States Government Manual	**523–5227**
Other Services	
Electronic and on-line services (voice)	**523–3447**
Privacy Act Compilation	**523–3187**
Public Laws Update Service (numbers, dates, etc.)	**523–6641**
TTY for the deaf-and-hard-of-hearing	**523–5229**

ELECTRONIC RESEARCH

World Wide Web

Full text of the daily Federal Register, CFR and other publications is located at: **http://www.access.gpo.gov/nara**

Federal Register information and research tools, including Public Inspection List, indexes, and links to GPO Access are located at: **http://www.nara.gov/fedreg**

E-mail

FEDREGTOC-L (Federal Register Table of Contents LISTSERV) is an open e-mail service that provides subscribers with a digital form of the Federal Register Table of Contents. The digital form of the Federal Register Table of Contents includes HTML and PDF links to the full text of each document.

To join or leave, go to **http://listserv.access.gpo.gov** and select *Online mailing list archives, FEDREGTOC-L, Join or leave the list (or change settings);* then follow the instructions.

PENS (Public Law Electronic Notification Service) is an e-mail service that notifies subscribers of recently enacted laws.

To subscribe, go to **http://hydra.gsa.gov/archives/publaws-l.html** and select *Join or leave the list* (or change settings); then follow the instructions.

FEDREGTOC-L and **PENS** are mailing lists only. We cannot respond to specific inquiries.

Reference questions. Send questions and comments about the Federal Register system to: **info@fedreg.nara.gov**

The Federal Register staff cannot interpret specific documents or regulations.

FEDERAL REGISTER PAGES AND DATE, AUGUST

49855–50342 1
50343–50580 2
50581–50790 5
50791–51064 6
51065–51458 7

CFR PARTS AFFECTED DURING AUGUST

At the end of each month, the Office of the Federal Register publishes separately a List of CFR Sections Affected (LSA), which lists parts and sections affected by documents published since the revision date of each title.

3 CFR

Executive Orders:
12722 (See Notice of July 30, 2002) 50341
12724 (See Notice of July 30, 2002) 50341

Administrative Orders:

Notices:
Notice of July 30, 2002 50341
Presidential Determinations:
No. 2002–26 of July 17, 2002 50343

5 CFR

532 (2 documents) 49855
2634.....49856

Proposed Rules:
532 (2 documents) 49878, 49879

7 CFR

735.....50778
736.....50778
737.....50778
738.....50778
739.....50778
740.....50778
741.....50778
742.....50778
928.....50581
1160.....49857

Proposed Rules:
701.....49879
1001.....49887

9 CFR

77.....50791

Proposed Rules:
112.....49891
113.....49891, 50606

10 CFR

Proposed Rules:
50.....50374
52.....50374

11 CFR

100.....50582, 51131
104.....51131
105.....51131
114.....51131

13 CFR

Proposed Rules:
121.....50383

14 CFR

39 .....49858, 49859, 49861, 50345, 50347, 50764, 50791, 50793, 50799, 51065, 51068, 51069
71 .....51070, 51071, 51072, 51073, 51074

Proposed Rules:
39.....50383, 51147
71.....51149

15 CFR

774.....50348
902.....50292, 51074

17 CFR

Proposed Rules:
15.....50608
230.....50326
240.....50326

18 CFR

Proposed Rules:
101.....51150
201.....51150
352.....51150

21 CFR

510 .....50802, 51079, 51080
520.....50596, 51080
529.....51079
558.....51080, 51081

22 CFR

41.....50349
196.....50802

24 CFR

903.....51030

25 CFR

Proposed Rules:
170.....51328

26 CFR

1.....49862
301.....49862

Proposed Rules:
1 .....49892, 50386, 50510, 50840
31.....50386
301.....50840

27 CFR

Proposed Rules:
9.....51156

28 CFR

79.....51422
542.....50804

Proposed Rules:
79.....51440

29 CFR

Proposed Rules:
1926.....50610

33 CFR

6 51082
117 50349
125 51082
165 ....50351, 51083

Proposed Rules:

Ch. I 50840
117 ....50842, 50842, 51157
155 51159
165 50846
334 ....50389, 50390
385 50340

34 CFR

Proposed Rules:

200 50986
668 51036
674 51036
682 51036
685 51036

36 CFR

242 50597

Proposed Rules:

242 50619

39 CFR

927 50353

40 CFR

51 50600
52 50602
81 50805
93 50808
180 ....50354, 51083, 51088, 51097, 51102
272 49864

Proposed Rules:

52 ....49895, 49897, 50391, 50847
85 51402
86 51402
272 49900

42 CFR

405 49982
412 49982
413 49982
485 49982

Proposed Rules:

68d 50622

44 CFR

64 50817
65 50362

46 CFR

Proposed Rules:

221 50406

47 CFR

25 ....51105, 51110
54 50602
73 ....50603, 50819, 50820, 50821, 50822, 51115
100 51110

Proposed Rules:

73 ....50850, 50851, 50852

48 CFR

1804 50823
1813 50823
1815 50823
1819 50824
1825 50823
1852 50823

49 CFR

192 50824

50 CFR

17 51116
216 49869
622 ....50367, 51074
648 ....50292, 50368, 50604
660 ....49875, 50835
679 ....49877, 50604, 51129, 51130

Proposed Rules:

17 50626
100 50619

REMINDERS

The items in this list were editorially compiled as an aid to Federal Register users. Inclusion or exclusion from this list has no legal significance.

RULES GOING INTO EFFECT AUGUST 7, 2002

AGRICULTURE DEPARTMENT

Agricultural Marketing Service

Hazelnuts grown in—

Oregon and Washington; published 7-8-02

ENVIRONMENTAL PROTECTION AGENCY

Pesticides; tolerances in food, animal feeds, and raw agricultural commodities:

2-propenoic acid, etc.; published 8-7-02

Dichlormid; published 8-7-02

Methyl anthranilate; published 8-7-02

Metsulfuron methyl; published 8-7-02

HEALTH AND HUMAN SERVICES DEPARTMENT

Food and Drug Administration

Animal drugs, feeds, and related products:

Oxytetracycline hydrochloride soluble powder; published 8-7-02

Oxytetracycline in swine food; amendment; published 8-7-02

Sponsor name and address changes—

Farnam Companies, Inc.; published 8-7-02

IDEXX Pharmaceuticals, Inc.; published 8-7-02

Pharmacia & Upjohn Co.; published 8-7-02

INTERIOR DEPARTMENT

Fish and Wildlife Service

Endangered and threatened species:

Carson wandering skipper; published 8-7-02

TRANSPORTATION DEPARTMENT

Federal Aviation Administration

Noise certification standards:

Subsonic jet airplanes and subsonic transport category large airplanes; published 7-8-02

COMMENTS DUE NEXT WEEK

AGRICULTURE DEPARTMENT

Agricultural Marketing Service

Milk marketing orders:

Mideast; comments due by 8-12-02; published 6-11-02 [FR 02-14455]

Mushroom promotion, research, and consumer information order; comments due by 8-15-02; published 7-16-02 [FR 02-17764]

Specialty crops; import regulations:

Raisins, Other-Seedless Sulfured; comments due by 8-13-02; published 6-14-02 [FR 02-15059]

AGRICULTURE DEPARTMENT

Animal and Plant Health Inspection Service

Plant-related quarantine, foreign:

Gypsy moth host material from Canada; comments due by 8-13-02; published 6-14-02 [FR 02-15074]

Viruses, serums, toxins, etc.:

Equine influenza vaccine, killed virus; comments due by 8-15-02; published 8-1-02 [FR 02-19422]

COMMERCE DEPARTMENT

National Oceanic and Atmospheric Administration

Endangered and threatened species:

Findings on petitions, etc.—

Klamath River Basin coho salmon; comments due by 8-12-02; published 6-13-02 [FR 02-14959]

Fishery conservation and management:

West Coast States and Western Pacific fisheries—

West Coast salmon; comments due by 8-16-02; published 8-1-02 [FR 02-19429]

DEFENSE DEPARTMENT

Civilian health and medical program of uniformed services (CHAMPUS):

TRICARE program—

Sub-acute and long-term care program reform; comments due by 8-12-02; published 6-13-02 [FR 02-14707]

ENVIRONMENTAL PROTECTION AGENCY

Air pollutants, hazardous; national emission standards:

Generic Maximum Achievable Control Technology—

Spandex production; comments due by 8-12-02; published 7-12-02 [FR 02-12842]

Spandex production; correction; comments due by 8-12-02; published 7-12-02 [FR 02-12843]

Secondary aluminum production; comments due by 8-13-02; published 6-14-02 [FR 02-14627]

Air quality implementation plans; approval and promulgation; various States:

California; comments due by 8-15-02; published 7-16-02 [FR 02-17696]

Georgia; comments due by 8-12-02; published 7-11-02 [FR 02-17317]

Tennessee; comments due by 8-15-02; published 7-16-02 [FR 02-17700]

Hazardous waste program authorizations:

Georgia; comments due by 8-15-02; published 7-16-02 [FR 02-17694]

Hazardous waste:

Cathode ray tubes and mercury-containing equipment; comments due by 8-12-02; published 6-12-02 [FR 02-13116]

Identification and listing—

Exclusions; comments due by 8-12-02; published 7-12-02 [FR 02-17458]

Municipal solid waste landfills; location restrictions for airport safety; comments due by 8-12-02; published 7-11-02 [FR 02-16994]

FEDERAL COMMUNICATIONS COMMISSION

Radio services special:

Maritime services—

Global Maritime Distress and Safety System; comments due by 8-15-02; published 5-17-02 [FR 02-12430]

FEDERAL TRADE COMMISSION

Textile Fiber Products Identification Act; implementation:

Lastol; comments due by 8-12-02; published 5-24-02 [FR 02-13151]

HEALTH AND HUMAN SERVICES DEPARTMENT

Food and Drug Administration

Medical devices:

Dental devices—

Root-form endosseous dental implants and abutments; reclassification from Class III to Class II; comments due by 8-12-02; published 5-14-02 [FR 02-12041]

HOUSING AND URBAN DEVELOPMENT DEPARTMENT

Public and Indian housing:

Native Hawaiian Housing Block Grant and Loan Guarantees for Native Hawaiian Housing Programs; comments due by 8-12-02; published 6-13-02 [FR 02-14721]

INTERIOR DEPARTMENT

Fish and Wildlife Service

Endangered and threatened species:

Critical habitat designations—

Blackburn's sphinx moth; comments due by 8-12-02; published 6-13-02 [FR 02-14683]

Various plant species from Lanai, HI; comments due by 8-15-02; published 7-16-02 [FR 02-18016]

INTERIOR DEPARTMENT

Minerals Management Service

Outer Continental Shelf; oil, gas, and sulphur operations:

Plans and information; comments due by 8-15-02; published 5-17-02 [FR 02-11641]

INTERIOR DEPARTMENT

Surface Mining Reclamation and Enforcement Office

Permanent program and abandoned mine land reclamation plan submissions:

Kentucky; comments due by 8-14-02; published 7-15-02 [FR 02-17654]

Montana; comments due by 8-14-02; published 7-15-02 [FR 02-17653]

PERSONNEL MANAGEMENT OFFICE

Prevailing rate systems; comments due by 8-16-02; published 7-17-02 [FR 02-17900]

RAILROAD RETIREMENT BOARD

Railroad Retirement Act:

Retirement age; definition; comments due by 8-16-02; published 6-17-02 [FR 02-15104]

SMALL BUSINESS ADMINISTRATION

Small business size standards:

Nonmanufacturer rule; waivers—

Small arms ammunition manufacturing; comments due by 8-16-02; published 8-2-02 [FR 02-19472]

SOCIAL SECURITY ADMINISTRATION

Social security benefits and supplemental security income:

Federal old-age, survivors, and disability benefits, and aged, blind, and disabled—

Residual functional capacity assessments and vocational experts and other sources use, clarifications; special profile incorporation into regulations; comments due by 8-12-02; published 6-11-02 [FR 02-13901]

TRANSPORTATION DEPARTMENT

Coast Guard

Ports and waterways safety:

East River, Manhattan, NY; safety zone; comments due by 8-16-02; published 7-26-02 [FR 02-18921]

Houston-Galveston Captain of Port Zone, TX; security zones; comments due by 8-12-02; published 6-11-02 [FR 02-14560]

Houston and Galveston Ports, TX; security zones; comments due by 8-12-02; published 6-11-02 [FR 02-14562]

Lower Mississippi River, New Orleans, LA; security zones; comments due by 8-12-02; published 6-11-02 [FR 02-14557]

St. Louis Captain of Port Zone, MO; security zones; comments due by 8-12-02; published 6-11-02 [FR 02-14556]

TRANSPORTATION DEPARTMENT

Federal Aviation Administration

Air traffic operating and flight rules, etc.:

Noise operating limits; transition to all Stage 3 fleet operating in 48 contiguous United States and District of Columbia; comments due by 8-14-02; published 7-15-02 [FR 02-17744]

Airworthiness directives:

Airbus; comments due by 8-16-02; published 7-17-02 [FR 02-18027]

Boeing; comments due by 8-12-02; published 6-28-02 [FR 02-16310]

Boeing and McDonnell Douglas; comments due by 8-12-02; published 6-26-02 [FR 02-15661]

CFM International; comments due by 8-12-02; published 6-13-02 [FR 02-14856]

Eurocopter France; comments due by 8-12-02; published 6-12-02 [FR 02-14568]

General Electric; comments due by 8-12-02; published 6-13-02 [FR 02-14857]

General Electric Co.; comments due by 8-12-02; published 6-12-02 [FR 02-14700]

SOCATA-Groupe AEROSPATIALE; comments due by 8-14-02; published 7-12-02 [FR 02-17600]

Airworthiness standards:

Special conditions—

Eclipse Aviation Corp. Model 500 airplane; comments due by 8-16-02; published 7-17-02 [FR 02-18017]

New Piper Aircraft Corp., PA 34-200T, Seneca V airplanes; comments due by 8-16-02; published 7-17-02 [FR 02-18018]

Class E airspace; comments due by 8-15-02; published 8-7-02 [FR 02-19677]

TRANSPORTATION DEPARTMENT

Federal Motor Carrier Safety Administration

Hazardous materials transportation; driving and parking rules:

Motor carriers transporting hazardous materials; periodic tire check requirement; comments due by 8-15-02; published 7-16-02 [FR 02-17898]

TRANSPORTATION DEPARTMENT

Maritime Administration

Vessel financing assistance:

Deposit funds; establishment and administration; comments due by 8-12-02; published 6-12-02 [FR 02-14823]

TREASURY DEPARTMENT

Internal Revenue Service

Excise taxes:

Diesel fuel; blended taxable fuel; comments due by 8-14-02; published 5-16-02 [FR 02-12308]

Income taxes:

Gross proceeds payments to attorneys; reporting requirements; comments due by 8-15-02; published 5-17-02 [FR 02-12464]

TREASURY DEPARTMENT

Thrift Supervision Office

Savings associations; fiduciary powers; and securities transactions; recordkeeping and confirmation requirements; comments due by 8-12-02; published 6-11-02 [FR 02-14317]

VETERANS AFFAIRS DEPARTMENT

Board of Veterans Appeals:

Appeals regulations and rules of practice—

Aging veterans; speeding appellate review process; comments due by 8-12-02; published 6-12-02 [FR 02-14685]

LIST OF PUBLIC LAWS

This is a continuing list of public bills from the current session of Congress which have become Federal laws. It may be used in conjunction with "P L U S" (Public Laws Update Service) on 202–523–6641. This list is also available online at *http://www.nara.gov/fedreg/plawcurr.html*.

The text of laws is not published in the **Federal Register** but may be ordered in "slip law" (individual pamphlet) form from the Superintendent of Documents, U.S. Government Printing Office, Washington, DC 20402 (phone, 202–512–1808). The text will also be made available on the Internet from GPO Access at *http://www.access.gpo.gov/nara/nara005.html*. Some laws may not yet be available.

H.R. 2175/P.L. 107–207

Born-Alive Infants Protection Act of 2002 (Aug. 5, 2002; 116 Stat. 926)

Last List August 6, 2002

Public Laws Electronic Notification Service (PENS)

PENS is a free electronic mail notification service of newly enacted public laws. To subscribe, go to *http://hydra.gsa.gov/archives/publaws-l.html* or send E-mail to **listserv@listserv.gsa.gov** with the following text message:

SUBSCRIBE PUBLAWS-L Your Name.

Note: This service is strictly for E-mail notification of new laws. The text of laws is not available through this service. **PENS** cannot respond to specific inquiries sent to this address.