AUTHENTICATED
U.S. GOVERNMENT
INFORMATION
GPO

# Federal Register

9–19–02 Thursday
Vol. 67 No. 182 Sept. 19, 2002
Pages 58955–59132

The **FEDERAL REGISTER** is published daily, Monday through Friday, except official holidays, by the Office of the Federal Register, National Archives and Records Administration, Washington, DC 20408, under the Federal Register Act (44 U.S.C. Ch. 15) and the regulations of the Administrative Committee of the Federal Register (1 CFR Ch. I). The Superintendent of Documents, U.S. Government Printing Office, Washington, DC 20402 is the exclusive distributor of the official edition.

The **Federal Register** provides a uniform system for making available to the public regulations and legal notices issued by Federal agencies. These include Presidential proclamations and Executive Orders, Federal agency documents having general applicability and legal effect, documents required to be published by act of Congress, and other Federal agency documents of public interest.

Documents are on file for public inspection in the Office of the Federal Register the day before they are published, unless the issuing agency requests earlier filing. For a list of documents currently on file for public inspection, see http://www.nara.gov/fedreg.

**The seal of the National Archives and Records Administration authenticates the Federal Register** as the official serial publication established under the Federal Register Act. Under 44 U.S.C. 1507, the contents of the **Federal Register** shall be judicially noticed.

The **Federal Register** is published in paper and on 24x microfiche. It is also available online at no charge as one of the databases on GPO Access, a service of the U.S. Government Printing Office.

The online edition of the **Federal Register** is issued under the authority of the Administrative Committee of the Federal Register as the official legal equivalent of the paper and microfiche editions (44 U.S.C. 4101 and 1 CFR 5.10). It is updated by 6 a.m. each day the **Federal Register** is published and it includes both text and graphics from Volume 59, Number 1 (January 2, 1994) forward.

GPO Access users can choose to retrieve online **Federal Register** documents as TEXT (ASCII text, graphics omitted), PDF (Adobe Portable Document Format, including full text and all graphics), or SUMMARY (abbreviated text) files. Users should carefully check retrieved material to ensure that documents were properly downloaded.

On the World Wide Web, connect to the **Federal Register** at http://www.access.gpo.gov/nara. Those without World Wide Web access can also connect with a local WAIS client, by Telnet to swais.access.gpo.gov, or by dialing (202) 512–1661 with a computer and modem. When using Telnet or modem, type swais, then log in as guest with no password.

For more information about GPO Access, contact the GPO Access User Support Team by E-mail at gpoaccess@gpo.gov; by fax at (202) 512–1262; or call (202) 512–1530 or 1–888–293–6498 (toll free) between 7 a.m. and 5 p.m. Eastern time, Monday–Friday, except Federal holidays.

The annual subscription price for the **Federal Register** paper edition is $699, or $764 for a combined **Federal Register, Federal Register** Index and List of CFR Sections Affected (LSA) subscription; the microfiche edition of the **Federal Register** including the **Federal Register** Index and LSA is $264. Six month subscriptions are available for one-half the annual rate. The charge for individual copies in paper form is $10.00 for each issue, or $10.00 for each group of pages as actually bound; or $2.00 for each issue in microfiche form. All prices include regular domestic postage and handling. International customers please add 25% for foreign handling. Remit check or money order, made payable to the Superintendent of Documents, or charge to your GPO Deposit Account, VISA, MasterCard or Discover. Mail to: New Orders, Superintendent of Documents, P.O. Box 371954, Pittsburgh, PA 15250–7954.

There are no restrictions on the republication of material appearing in the **Federal Register.**

**How To Cite This Publication:** Use the volume number and the page number. Example: 67 FR 12345.

## SUBSCRIPTIONS AND COPIES

**PUBLIC**

**Subscriptions:**

| | |
|---|---|
| Paper or fiche | **202–512–1800** |
| Assistance with public subscriptions | **202–512–1806** |

**General online information** **202–512–1530; 1–888–293–6498**

**Single copies/back copies:**

| | |
|---|---|
| Paper or fiche | **202–512–1800** |
| Assistance with public single copies | **1–866–512–1800 (Toll-Free)** |

**FEDERAL AGENCIES**

**Subscriptions:**

| | |
|---|---|
| Paper or fiche | **202–523–5243** |
| Assistance with Federal agency subscriptions | **202–523–5243** |

**What's NEW!**

**Federal Register** Table of Contents via e-mail

Subscribe to FEDREGTOC, to receive the **Federal Register** Table of Contents in your e-mail every day.

If you get the HTML version, you can click directly to any document in the issue.

To subscribe, go to **http://listserv.access.gpo.gov** and select:

*Online mailing list archives*
*FEDREGTOC-L*
*Join or leave the list*

Then follow the instructions.

**FEDERAL REGISTER WORKSHOP**

## THE FEDERAL REGISTER: WHAT IT IS AND HOW TO USE IT

**FOR:** Any person who uses the **Federal Register** and Code of Federal Regulations.

**WHO:** Sponsored by the Office of the Federal Register.

**WHAT:** Free public briefings (approximately 3 hours) to present:

1. The regulatory process, with a focus on the Federal Register system and the public's role in the development of regulations.
2. The relationship between the **Federal Register** and Code of Federal Regulations.
3. The important elements of typical **Federal Register** documents.
4. An introduction to the finding aids of the FR/CFR system.

**WHY:** To provide the public with access to information necessary to research Federal agency regulations which directly affect them. There will be no discussion of specific agency regulations.

### WASHINGTON, DC

**WHEN:** September 24, 2002—9:00 a.m. to noon

**WHERE:** Office of the Federal Register
Conference Room
800 North Capitol Street, NW.
Washington, DC
(3 blocks north of Union Station Metro)

**RESERVATIONS:** 202–523–4538; or
*info@fedreg.nara.gov*

Printed on recycled paper.

# Contents

**Federal Register**

Vol. 67, No. 182

Thursday, September 19, 2002

**Agriculture Department**
*See* Cooperative State Research, Education, and Extension Service
*See* Forest Service

**Air Force Department**
NOTICES
Meetings:
Scientific Advisory Board, 59054

**Alcohol, Tobacco and Firearms Bureau**
NOTICES
Agency information collection activities:
Proposed collection; comment request, 59094–59096

**Army Department**
NOTICES
Environmental statements; availability, etc.:
National Guard Training Center, Fort Indiantown Gap, PA; enhanced training and operations, 59054–59055

**Centers for Disease Control and Prevention**
NOTICES
Agency information collection activities:
Proposed collection; comment request, 59061

**Centers for Medicare & Medicaid Services**
NOTICES
Agency information collection activities:
Submission for OMB review; comment request; retraction, 59061

**Commerce Department**
*See* International Trade Administration
*See* National Oceanic and Atmospheric Administration
*See* Patent and Trademark Office

**Comptroller of the Currency**
RULES
Debt cancellation contracts and debt suspension agreements; national bank standards, 58962–58978

**Cooperative State Research, Education, and Extension Service**
NOTICES
Meetings:
Agricultural research, extension, and education grant programs; stakeholders input; listening session, 59047–59048

**Defense Department**
*See* Air Force Department
*See* Army Department

**Education Department**
NOTICES
Agency information collection activities:
Proposed collection; comment request, 59055–59056
Privacy Act:
Computer matching programs, 59056

**Energy Department**
*See* Federal Energy Regulatory Commission
NOTICES
Natural gas exportation and importation:
Multifuels, L.P., et al., 59057

**Environmental Protection Agency**
RULES
Air programs; State authority delegations:
New Hampshire, 59001–59005
Utah, 58998–59001
Air quality planning purposes; designation of areas:
California; correction, 59005–59006
Pesticides; tolerances in food, animal feeds, and raw agricultural commodities:
Diflubenzuron, 59006–59017
Superfund program:
National oil and hazardous substances contingency plan—
National priorities list update, 59017–59020
Water pollution; effluent guidelines for point source categories:
Pulp, paper, and paperboard; bleached papergrade kraft and soda, 58990–58998
PROPOSED RULES
Air programs; State authority delegations:
New Hampshire, 59034–59035
Utah, 59034
Superfund program:
National oil and hazardous substances contingency plan—
National priorities list update, 59035
NOTICES
Meetings:
Gulf of Mexico Program Management Committee, 59058–59059
Reports and guidance documents; availability, etc.:
Metal finishing facility risk screening tool; technical documentation and user's guide, 59059

**Executive Office of the President**
*See* Presidential Documents
*See* Trade Representative, Office of United States

**Federal Aviation Administration**
RULES
Class E airspace, 58982–58984
Class E airspace; correction, 58984
PROPOSED RULES
Airworthiness directives:
Hartzell Propeller Inc., 59026–59027
Pratt & Whitney, 59027–59029
Class D and Class E airspace, 59029–59030
Class E airspace, 59030–59033
NOTICES
Agency information collection activities:
Proposed collection; comment request, 59089

**Federal Communications Commission**
PROPOSED RULES
Common carrier services:
Wireless telecommunications services—
71-76 GHz, 81-86 GHz, and 92-95 GHz bands allocations and service rules, 59036–59045

**Federal Election Commission**
NOTICES
Meetings; Sunshine Act, 59059

**Federal Energy Regulatory Commission**
NOTICES
Electric rate and corporate regulation filings:
Avista Corp. et al., 59057–59058

**Federal Highway Administration**
NOTICES
Environmental statements; notice of intent:
Jefferson, Rock, and Walworth Counties, WI, 59089–59090

**Federal Housing Finance Board**
RULES
Affordable Housing Program; amendments, 58978–58982

**Federal Reserve System**
NOTICES
Banks and bank holding companies:
Change in bank control, 59059–59060
Formations, acquisitions, and mergers, 59060

**Fish and Wildlife Service**
RULES
Migratory bird hunting:
Seasons, limits, and shooting hours; establishment, etc., 59109–59132
NOTICES
Agency information collection activities:
Submission for OMB review; comment request, 59070–59072
Environmental statements; availability, etc.:
Grand-White Lakes Land Bridge Protection Project, Cameron Parish, LA, 59072–59073
Reports and guidance documents; availability, etc.:
Lower Fox River and Green Bay Area, WI; Joint Restoration Plan and Environmental Assessment; comment request, 59073–59074

**Forest Service**
NOTICES
Meetings:
Resource Advisory Committees—
Lassen County, 59048

**General Services Administration**
NOTICES
Agency information collection activities:
Submission for OMB review; comment request, 59060–59061

**Health and Human Services Department**
*See* Centers for Disease Control and Prevention
*See* Centers for Medicare & Medicaid Services
*See* Health Resources and Services Administration

**Health Resources and Services Administration**
NOTICES
National Vaccine Injury Compensation Program:
Petitions received, 59061–59068

**Housing and Urban Development Department**
NOTICES
Agency information collection activities:
Submission for OMB review; comment request, 59068–59069

**Indian Affairs Bureau**
NOTICES
Environmental statements; notice of intent:
Couer d'Alene Reservation, ID, 59074–59075

**Interior Department**
*See* Fish and Wildlife Service
*See* Indian Affairs Bureau
*See* Land Management Bureau
NOTICES
Meetings:
U.S. Coral Reef Task Force, 59069

**International Trade Administration**
NOTICES
Antidumping:
Cased pencils from—
China, 59048–59050
Ferrovanadium from—
South Africa, 59050–59051

**International Trade Commission**
NOTICES
Import investigations:
Semiconductor timing signal generator devices, components, and products containing same, 59075–59076
Tomatoes and peppers; U.S. imports monitoring, 59076–59077
Trade agreements impact; Tokyo Round, U.S.-Israel FTA, U.S.-Canada FTA, NAFTA, and Uruguay Round; effect on U.S. economy, 59077

**Justice Department**
RULES
Organization, functions, and authority delegations:
Drug Enforcement Administration and Federal Bureau of Investigation, 58988–58990

**Labor Department**
NOTICES
Agency information collection activities:
Submission for OMB review; comment request, 59077–59078

**Land Management Bureau**
NOTICES
Meetings:
Resource Advisory Councils—
New Mexico, 59075

**Merit Systems Protection Board**
RULES
Practice and procedure:
Case suspension procedures, 58961–58962

**National Aeronautics and Space Administration**
NOTICES
Patent licenses; non-exclusive, exclusive, or partially exclusive:
Intellimotion Systems Corp., 59078

**National Highway Traffic Safety Administration**
RULES
Anthropomorphic test dummies:
Occupant crash protection—-
Hybrid III test dummies; 6-year-old child dummy; design and performance specifications; response to reconsideration petitions; correction, 59020–59024

Motor vehicle safety standards:
Nonconforming vehicles; importation eligibility determinations; list, 59097–59106
NOTICES
Motor vehicle safety standards:
Nonconforming vehicles—
Importation eligibility; determinations, 59106–59107

**National Oceanic and Atmospheric Administration**
NOTICES
Environmental statements; notice of intent:
Western North Atlantic Coast; bottlenose dolphins; take reduction plan, 59051–59052

**Nuclear Regulatory Commission**
PROPOSED RULES
Rulemaking petitions:
Union of Concerned Scientists; denied, 59025–59026

**Office of United States Trade Representative**
*See* Trade Representative, Office of United States

**Patent and Trademark Office**
NOTICES
Agency information collection activities:
Proposed collection; comment request, 59052–59054
Submission for OMB review; comment request, 59054

**Presidential Documents**
PROCLAMATIONS
*Special observances:*
National Farm Safety and Health Week (Proc. 7592), 58957–58958
National Hispanic Heritage Month (Proc. 7591), 58955–58956
National Historically Black Colleges and Universities Week (Proc. 7593), 58959–58960

**Public Health Service**
*See* Centers for Disease Control and Prevention
*See* Health Resources and Services Administration

**Railroad Retirement Board**
NOTICES
Agency information collection activities:
Proposed collection; comment request, 59078

**Research and Special Programs Administration**
PROPOSED RULES
Pipeline safety:
Hazardous liquid transportation—
Hazardous liquid pipeline operator annual report form, 59045–59046
NOTICES
Hazardous materials:
Applications; exemptions, renewals, etc., 59090–59092

**Securities and Exchange Commission**
NOTICES
Investment Company Act of 1940:
Exemption applications—
Mexico Fund, Inc., 59079–59082
TCW Convertible Securities Fund, Inc., 59082–59084
Self-regulatory organizations; proposed rule changes:
Boston Stock Exchange, Inc., 59084–59086

**State Department**
RULES
International Traffic in Arms regulations:
U.S. Munitions List; amendments, 58984–58988
NOTICES
Senior Executive Service:
Performance Review Board; membership, 59086

**Surface Transportation Board**
NOTICES
Railroad operation, acquisition, construction, etc.:
Bangor & Aroostook Railroad Co. et al., 59092

**Trade Representative, Office of United States**
NOTICES
World Trade Organization:
Doha development agenda negotiations; market access; comment request and hearing, 59086–59089

**Transportation Department**
*See* Federal Aviation Administration
*See* Federal Highway Administration
*See* National Highway Traffic Safety Administration
*See* Research and Special Programs Administration
*See* Surface Transportation Board

**Treasury Department**
*See* Alcohol, Tobacco and Firearms Bureau
*See* Comptroller of the Currency
NOTICES
Agency information collection activities:
Submission for OMB review; comment request, 59092–59094

**Veterans Affairs Department**
PROPOSED RULES
Disabilities rating schedule:
Tinnitus, 59033–59034
NOTICES
Meetings:
Former Prisoners of War Advisory Committee, 59096
Geriatrics and Gerontology Advisory Committee, 59096

---

**Separate Parts In This Issue**

**Part II**
Transportation Department, National Highway Traffic Safety Administration, 59097–59107

**Part III**
Interior Department, Fish and Wildlife Service, 59109–59132

---

**Reader Aids**

Consult the Reader Aids section at the end of this issue for phone numbers, online resources, finding aids, reminders, and notice of recently enacted public laws.

To subscribe to the Federal Register Table of Contents LISTSERV electronic mailing list, go to http://listserv.access.gpo.gov and select Online mailing list archives, FEDREGTOC-L, Join or leave the list (or change settings); then follow the instructions.

## CFR PARTS AFFECTED IN THIS ISSUE

A cumulative list of the parts affected this month can be found in the Reader Aids section at the end of this issue.


**3 CFR**

**Proclamations:**

7591 ..... 58955
7592 ..... 58957
7593 ..... 58959

**5 CFR**

1201 ..... 58961

**10 CFR**

**Proposed Rules:**

50 ..... 59025

**12 CFR**

7 ..... 58962
37 ..... 58962
951 ..... 58978

**14 CFR**

71 (4 documents) ..... 58982, 58983, 58984

**Proposed Rules:**

39 (2 documents) ..... 59026, 59027
71 (3 documents) ..... 59029, 59030, 59032

**22 CFR**

121 ..... 58984
123 ..... 58984

**28 CFR**

0 ..... 58988

**38 CFR**

**Proposed Rules:**

4 ..... 59033

**40 CFR**

9 ..... 58990
52 ..... 58998
60 ..... 58998
63 ..... 59001
81 ..... 59005
180 ..... 59006
300 ..... 59017
430 ..... 58990

**Proposed Rules:**

52 ..... 59034
63 ..... 59034
300 ..... 59035

**47 CFR**

**Proposed Rules:**

2 ..... 59036
15 ..... 59036
97 ..... 59036
101 ..... 59036

**49 CFR**

572 ..... 59020
593 ..... 59098

**Proposed Rules:**

195 ..... 59045

**50 CFR**

20 ..... 59110

Federal Register
Vol. 67, No. 182
Thursday, September 19, 2002

# Presidential Documents

**Title 3—**

## The President

**Proclamation 7591 of September 13, 2002**

## National Hispanic Heritage Month, 2002

**By the President of the United States of America**

**A Proclamation**

America's cultural diversity has always been a great strength of our Nation. The Hispanic-American community has a long and important history of commitment to our Nation's core values, and the contributions of this community have helped make our country great. During National Hispanic Heritage Month, we celebrate the many achievements of Hispanic Americans and recognize their contributions to our country.

In 1968, the Congress authorized President Lyndon Johnson to proclaim National Hispanic Heritage Week, and this observance was expanded in 1988 to a month-long celebration to honor our Nation's Hispanic heritage. During this month, America celebrates the traditions, ancestry, and unique experiences of those who trace their roots to Spain, Mexico, the countries of Central and South America, and the Caribbean.

Throughout our history, Hispanic Americans have enriched the American way of life, and we recognize the millions of Hispanic Americans whose love of family, hard work, and community have helped unite us as a people and sustain us as a Nation. As entrepreneurs and public servants, scholars and artists, Hispanic Americans have provided wisdom, energy, and leadership to our communities, and to our country. During the Civil War, David Glasgow Farragut, son of Revolutionary War hero Jorge Farragut of Spain, won fame as a Union hero by blocking Southern ports. The Congress rewarded his valor by naming him the Navy's first four-star Admiral. Today, a statue honoring his many accomplishments stands in Farragut Square, Washington, D.C. Nearly a century ago, Hispanic actresses Myrtle Gonzalez and Beatriz Michelena were popular stars in silent films. Many others followed as the industry expanded in the 20th Century, including Rita Hayworth, Fernando Lamas, and Anthony Quinn. In 1959, Dr. Severo Ochoa was a co-recipient of the Nobel Prize in Physiology or Medicine for the discovery of RNA (ribonucleic acid), one of the chemical building blocks of life. In the world of sports, athletes such as Roberto Clemente earned the admiration of countless Americans for his athletic skill and commitment to humanitarian efforts.

We also remember those Hispanics who established the vibrant and diverse American cities of Los Angeles, San Francisco, Santa Fe, San Antonio, and many others. We remember those who were instrumental in exploring and mapping our great hemisphere and we honor those proud Hispanic-American patriots who fought and died for our country in every war and conflict since our founding.

During National Hispanic Heritage Month, I join with all Americans in celebrating this rich and diverse culture and encourage all citizens to recognize the important role of Hispanics in creating and building this great Nation.

To honor the achievements of Hispanic Americans, the Congress, by Public Law 100–402, has authorized and requested the President to issue annually a proclamation designating September 15 through October 15, as ''National Hispanic Heritage Month.''

NOW, THEREFORE, I, GEORGE W. BUSH, President of the United States of America, do hereby proclaim September 15 through October 15, 2002, as National Hispanic Heritage Month. I call upon public officials, educators, librarians, and all the people of the United States to observe this month with appropriate ceremonies, activities, and programs.

IN WITNESS WHEREOF, I have hereunto set my hand this thirteenth day of September, in the year of our Lord two thousand two, and of the Independence of the United States of America the two hundred and twenty-seventh.

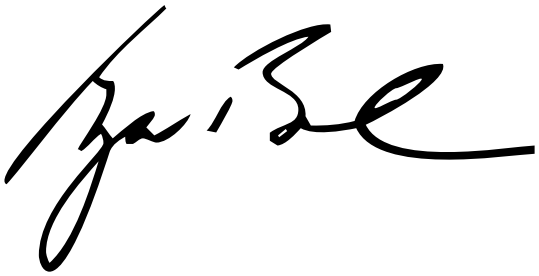

[FR Doc. 02–23997
Filed 9–18–02; 8:45 am]
Billing code 3195–01–P

# Presidential Documents

**Proclamation 7592 of September 13, 2002**

## National Farm Safety and Health Week, 2002

**By the President of the United States of America**

**A Proclamation**

American farm and ranch families embody our Nation's values of hard work, love of the land, and love of country. Farming not only feeds our country but increasingly provides more of our Nation's energy needs. The success of America's farmers and ranchers is essential to our economy, and helping to ensure their safety is an important goal for our country.

Because their homes also serve as their workplace, our country's farm families are often exposed to unique hazards. These include powerful machinery, dangerous chemicals, unruly livestock, and buildings containing high dust and gas levels. To ensure safety, young family members helping with farm work must be trained to recognize these dangers; and we must also safeguard older farm workers whose health risks may increase due to aging and previous injuries.

Professionals in the engineering safety and rural health fields have made significant progress in preventing accidents in agricultural settings. To protect machinery operators, industry has made great strides to incorporate safeguards to prevent rollovers, entanglements, and other accidents. Personal protective gear, new and safer packaging, and advances in respiratory protection and hearing conservation help protect agricultural workers from contact with hazardous products, excessive dust, gas, and unduly loud noise in the work environment.

To ensure our farmers' continued health, we must increase public awareness of available safety precautions. Simple, economical tools and procedures can help prevent accidents on farms. With proper installation and care, lighting and marking devices reduce the risk of highway collisions between farm equipment and vehicles. By clearly labeling farm chemicals and storing them in locked containers, we can help avoid poisonings and injuries.

America's farmers make invaluable contributions to our country, and my Administration is committed to preserving the farm way of life for future generations. In May, I was pleased to sign the Farm Security and Rural Investment Act of 2002. This generous new law will strengthen American agriculture and support our farmers through difficult times, without encouraging overproduction and depressing prices. I also intend to aggressively use my trade promotion authority to open markets to American farmers. By promoting farm safety, we strengthen our farm economy and help our Nation's farmers continue to be the best, most productive farmers in the world.

NOW, THEREFORE, I, GEORGE W. BUSH, President of the United States of America, by virtue of the authority vested in me by the Constitution and laws of the United States, do hereby proclaim the week of September 15 through September 21, 2002, as National Farm Safety and Health Week. I call upon the agencies, organizations, and businesses that serve America's agricultural workers to strengthen their commitment to promoting farm safety and health programs. I also encourage American citizens to recognize the

importance of our agricultural heritage and the valuable contributions America's farmers, ranchers, and farm workers make to our Nation's economy and vitality.

IN WITNESS WHEREOF, I have hereunto set my hand this thirteenth day of September, in the year of our Lord two thousand two, and of the Independence of the United States of America the two hundred and twenty-seventh.

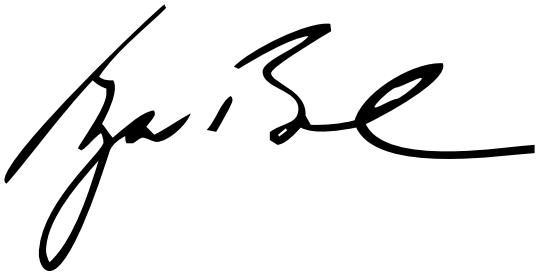

[FR Doc. 02–23998
Filed 9–18–02; 8:45 am]
Billing code 3195–01–P

# Presidential Documents

**Proclamation 7593 of September 13, 2002**

## National Historically Black Colleges and Universities Week, 2002

**By the President of the United States of America**

**A Proclamation**

America's Historically Black Colleges and Universities are a vital part of our Nation's higher education system. During National Historically Black Colleges and Universities Week, we renew our dedication to these institutions and strengthen our commitment to securing educational freedom, opportunity, and access for every American.

Emerging more than a century ago in a segregated society, our Historically Black Colleges and Universities have provided quality education and promoted greater participation by African Americans in every sector of our society. These institutions continue to serve as centers of hope and opportunity, reflecting the belief that every student in America should have access to a college education. While constituting less than 3 percent of America's institutions of higher education, today they enroll 14 percent of all African Americans enrolled in colleges or universities.

These schools represent a source of accomplishment and great pride for both the African-American community and our entire Nation. The various founders of our Historically Black Colleges and Universities understood that high standards and quality instruction would prepare their students to follow their dreams and succeed in life. By opening doors to new academic pursuits, these schools have encouraged and enabled generations of African Americans to reach their full potential.

America must continue to support these important institutions, because they provide educational opportunities that otherwise might not be available. In 1980, Executive Order 12232 established a Federal program to enhance equal opportunity and strengthen the capacity of Historically Black Colleges and Universities to provide excellence in education. My Administration remains committed to this important mission and to making the goal of higher education accessible to our citizens.

America recognizes and honors the many achievements of Historically Black Colleges and Universities, and their invaluable contributions to our country. They help foster a culture of achievement and create a brighter future for all Americans.

NOW, THEREFORE, I, GEORGE W. BUSH, President of the United States of America, by virtue of the authority vested in me by the Constitution and laws of the United States, do hereby proclaim September 15 through September 21, 2002, as National Historically Black Colleges and Universities Week. I call upon public officials, educators, librarians, and citizens of the United States to observe this week with appropriate ceremonies, activities, and programs in order to show our appreciation for these remarkable educational institutions, and to commend the achievements of their talented graduates.

IN WITNESS WHEREOF, I have hereunto set my hand this thirteenth day of September, in the year of our Lord two thousand two, and of the Independence of the United States of America the two hundred and twenty-seventh.

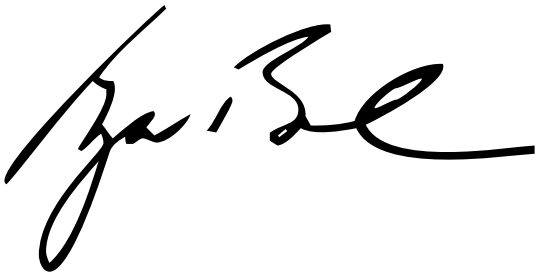

[FR Doc. 02–23999
Filed 9–18–02; 8:45 am]
Billing code 3195–01–P

# Rules and Regulations

Federal Register

Vol. 67, No. 182

Thursday, September 19, 2002

This section of the FEDERAL REGISTER contains regulatory documents having general applicability and legal effect, most of which are keyed to and codified in the Code of Federal Regulations, which is published under 50 titles pursuant to 44 U.S.C. 1510.

The Code of Federal Regulations is sold by the Superintendent of Documents. Prices of new books are listed in the first FEDERAL REGISTER issue of each week.

## MERIT SYSTEMS PROTECTION BOARD

### 5 CFR Part 1201

### Practices and Procedures

**AGENCY:** Merit Systems Protection Board.

**ACTION:** Final rule.

**SUMMARY:** The Merit Systems Protection Board (MSPB or the Board) is amending its practices and procedures regulations at 5 CFR Part 1201 by adding a new section to permit suspension of a case for up to 60 days to allow the parties to pursue discovery or settlement.

**EFFECTIVE DATE:** September 19, 2002.

**FOR FURTHER INFORMATION CONTACT:** Bentley M. Roberts, Jr., Clerk of the Board, Merit Systems Protection Board, 1615 M Street, NW., Washington, DC 20419; (202) 653–7200; fax: (202) 653–7130; or email: mspb@mspb.gov.

**SUPPLEMENTARY INFORMATION:** This amendment to the Board's rules of practice and procedure resulted from the successful implementation of a pilot program. In November 1999, the Merit Systems Protection Board (MSPB) established a pilot program to allow appellants and agencies up to 60 days additional time to pursue discovery and settlement efforts in pending initial appeals. The pilot program was initiated, in part, in response to concerns raised by Board practitioners that the 120-day time limit for adjudicating appeals prevented the parties from conducting the discovery they believed necessary to prevail on appeal. The pilot program simplified the process for obtaining a suspension of case processing to accommodate parties before the Board.

Under the pilot program, the presiding judge was authorized to grant a 30-day suspension of case processing to parties who jointly requested the additional time. A second 30-day suspension was granted if the parties agreed that additional time was necessary. Parties were not required to provide evidence and argument to support a joint request for additional time, so long as the request was made early in the proceedings.

The Board believes that the pilot program has been successful in addressing the concerns regarding adequate time to conduct discovery and in facilitating settlement of complex cases.

The Board announced this amendment as an interim rule at 67 FR 3811 (Jan. 28, 2002). The Board received comments from one practitioner and one agency representative. After careful consideration of the comments received, the Board is adopting the interim rule with minor amendments. The comments and the Board's responses are as follows:

1. One commenter suggested that administrative judges be given the discretion to grant belatedly filed requests for extensions.

The substance of this recommendation was already covered by the regulation, which provides, at paragraph (d), for the judge to ''consider'' any requests ''that are filed after the time limit set forth in paragraph (c) of this section.'' We believe that this paragraph provides a sufficiently clear grant of discretion to administrative judges to approve ''belated'' requests.

2. One commenter suggested that the regulations be amended to permit case suspensions for any reason.

This recommendation was not adopted. The reason for granting the request to suspend case processing should have some rational relationship to furthering the interests of the parties (fairness, due process, etc.) in the specific matter before the Board and the Board's effective adjudication of cases, while avoiding the encouragement of frivolous requests for case suspensions.

3. One commenter suggested that the regulations be amended to provide that a request that is not based on the need for additional discovery or the desire to pursue settlement be treated as a request for a continuance or for a dismissal without prejudice to refile the appeal. Under this provision, the request for a dismissal without prejudice would not require the appellant's approval.

This recommendation was not adopted as the Board believes that these procedures should remain separate. Continuances and dismissals without prejudice are already generally provided for by the Board's regulations and case law, and need not be addressed here. The section 1201.28 process is intentionally limited to the two purposes named. The suggestion that dismissals without prejudice not require the appellant's assent runs counter to the Board's policy of avoiding unnecessary impediments to an appellant's pursuit of an appeal.

4. One commenter suggested that the regulations be amended to provide that the 120-day clock begin anew from the termination of the suspension.

This recommendation was not adopted. The procedure established under section 1201.28 is called a ''suspension,'' which means that the adjudication clock is temporarily stopped, not that it is re-set.

5. One commenter stated that the proposed regulations are unnecessary and will cause pointless delays.

Contrary to the view expressed by this commenter, numerous agency representatives and Board practitioners have expressed the view that this procedure has been very helpful. The extent of the favorable reviews is the basis for the Board's decision to institute this procedure as a permanent component of its adjudicatory process.

6. One commenter suggested that the parties should be required to comply with a more formal system for filing a request, including a requirement that both parties file the request, describe settlement efforts, and explain the reasons for the request.

This recommendation was not adopted. The regulation contemplates that the parties will specify that the request is being made for one of the reasons described in the regulation. If the request is made jointly, the administrative judge should not have to second-guess the parties on their need for additional time. If it is made unilaterally, the administrative judge is given discretion to grant or deny the request. He or she can weigh the party's or parties' arguments and rule accordingly. Since there is no requirement that settlement efforts reach any particular point for a suspension to be granted, an outline of settlement efforts would not be helpful.

7. One commenter suggested that the Board establish evidentiary

requirements to support requests for 30-day extensions.

This recommendation was not adopted. The aim of this regulation is to encourage the parties to complete discovery or work amicably to reach a speedy settlement or other resolution of the matter. To require the parties to provide evidence and argument to support a joint request would add another matter for review and undermine this objective.

8. One commenter suggested that the regulations should specify the limit on the amount of time the judge may grant for a unilateral request for extension of time to pursue discovery.

This recommendation was adopted. Changes were made to paragraph (b) to specify a 30-day limit on the amount of time the judge may grant for a unilateral request. For the sake of consistency, similar modifications were made to paragraph (d) regarding untimely requests.

9. One commenter suggested that paragraph (e), the provision governing early termination of the suspension period, is confusing and requires clarification.

The first part of the comment states that a settlement agreement would automatically terminate the suspension. This observation is accurate but not relevant to the provision, which provides for the termination of the suspension only when the administrative judge's extensive involvement in the appeal will be needed. As to the remaining concerns expressed, the point of the regulation is that the case should remain suspended only as long as settlement and/or discovery efforts without the administrative judge's intervention are likely to be helpful in the resolution of the appeal, which for the time being is not being adjudicated. Adjudication would resume if the process no longer serves those ends. If an administrative judge must be extensively involved in the process, then by definition, the matter is no longer suspended, but rather is under active consideration by the administrative judge and has re-entered the adjudication process.

**List of Subjects in 5 CFR Part 1201**

Administrative practice and procedure, Civil rights, Government employees.

Accordingly, the Board adopts as final the interim rule published on January 28, 2002 (67 FR 3811), with the following change:

## PART 1201—[AMENDED]

1. The authority citation for part 1201 continues to read as follows:

**Authority:** 5 U.S.C. 1204 and 7701, unless otherwise noted.

2. In § 1201.28, paragraph (d) is revised to read as follows:

**§ 1201.28 Case suspension procedures**

* * * * *

(d) *Untimely requests.* The judge may consider requests for initial suspensions that are filed after the time limit set forth in paragraph (c) of this section. Such requests for additional time (up to 30 days for initial suspensions and a 30-day extension, as provided in paragraph (a) of this section) may be granted at the discretion of the judge.

* * * * *

Dated: September 13, 2002.

**Bentley M. Roberts, Jr.,**

*Clerk of the Board.*

[FR Doc. 02–23771 Filed 9–18–02; 8:45 am]

BILLING CODE 7400–01–P

---

## DEPARTMENT OF THE TREASURY

## Office of the Comptroller of the Currency

## 12 CFR Parts 7 and 37

**[Docket No. 02–14]**

**RIN 1557–AB75**

## Debt Cancellation Contracts and Debt Suspension Agreements

**AGENCY:** Office of the Comptroller of the Currency, Treasury.

**ACTION:** Final rule.

**SUMMARY:** The Office of the Comptroller of the Currency (OCC) is adding a new part 37 to its regulations that addresses debt cancellation contracts (DCCs) and debt suspension agreements (DSAs). The purpose of the final rule is to establish standards governing these products in order to ensure that national banks provide such products consistent with safe and sound banking practices and subject to appropriate consumer protections.

**EFFECTIVE DATE:** This rule is effective June 16, 2003.

**FOR FURTHER INFORMATION CONTACT:** Jean Campbell, Attorney, Legislative and Regulatory Activities Division, (202) 874–5090; Suzette Greco, Special Counsel, Securities and Corporate Practices Division, (202) 874–5210; or Rick Freer, Compliance Specialist, Compliance Division, (202) 874–4862, Office of the Comptroller of the Currency, 250 E Street, SW., Washington, DC 20219.

**SUPPLEMENTARY INFORMATION:**

### I. Background

*National Banks' Authority to Offer DCCs and DSAs*

A DCC is a loan term or a contractual arrangement modifying loan terms linked to a bank's extension of credit, under which the bank agrees to cancel all or part of a customer's obligation to repay an extension of credit from that bank upon the occurrence of a specified event. A DSA is a loan term or a contractual arrangement modifying loan terms linked to a bank's extension of credit, under which the bank agrees to suspend all or part of a customer's obligation to repay an extension of credit from that bank upon the occurrence of a specified event.

Under a DCC or a DSA, the customer typically agrees to pay an additional fee to the bank in exchange for the bank's promise to cancel or temporarily suspend the borrower's obligation to repay the loan. The fee may be a lump sum that is payable at the outset of a loan (that may be financed over the term of the loan), or the fee may take the form of a monthly or other periodic charge. The fee compensates the bank for releasing borrowers from loan obligations under the circumstances specified in the DCC or DSA. These arrangements also provide customers a convenient method of extinguishing debt in times of financial or personal hardship, and enable the bank to avoid the time and expense of collecting the balance of the loan from a borrower's estate in the event of the borrower's death or other specified circumstances.[1]

The authority of national banks to offer DCCs and DSAs is well-established.[2] Nearly 40 years ago, in 1963, the OCC concluded that offering DCCs was a lawful exercise of the powers of a national bank in connection with the business of banking.[3] The following year various OCC issuances affirmed that position.[4] As explained by Comptroller James Saxon:

---

[1] *See generally,* Joseph L. Moore & James W. Smith, *Debt Cancellation Contracts: A Neglected Asset,* 112 Banking L. J. 918 (1995).

[2] 12 U.S.C. 24(Seventh). *See* Memorandum from Julie L. Williams, First Senior Deputy Comptroller and Chief Counsel, to John D. Hawke, Jr., Comptroller of the Currency, dated June 25, 2002 (discussing national banks' authority to offer DCCs and DSAs).

[3] *See* Comptroller of the Currency, *The National Banking Review* 264 (Dec. 1963).

[4] *See* Letter from James J. Saxon to the President of a National Bank (Mar. 10, 1964); Letter from James J. Saxon to the President of a National Bank

The debt cancellation ruling issued by this Office [OCC] is not intended as a means for National Banks to invade the field of insurance. Rather, it is a recognition by this Office of a National Bank's right to protect itself by the establishment and maintenance of appropriate reserves against anticipated losses in connection with its lending activities under 12 U.S.C. 24. The necessity to maintain such reserves and to adjust its charges in relation to both reserves and the risk involved in a particular transaction has long been recognized as an essential part of the business of banking.[5]

In 1971, the OCC codified the interpretive ruling on DCCs as 12 CFR 7.7495.

The only Federal circuit court of appeals that has considered DCCs or DSAs upheld the OCC's determination that the National Bank Act authorizes national banks to enter into DCCs with their borrowers and that DCCs were banking products, not part of the ''business of insurance.'' [6] In *First Nat'l Bank of Eastern Arkansas* v. *Taylor,* the Eighth Circuit Court of Appeals considered whether DCCs provided by a national bank to its loan customers were subject to Arkansas State insurance regulation. The court held that the National Bank Act authorized national banks to offer DCCs. Further, it held that Federal law precluded the State insurance commissioner from requiring the national bank to obtain a State insurance license and from taking enforcement action against the national bank for failing to do so.[7]

The Eighth Circuit found that DCCs do not constitute the ''business of insurance'' under the McCarran-Ferguson Act because the product falls within the powers incidental to banking granted by the National Bank Act.[8] The court emphasized that DCCs offered by banks in connection with their loans differ significantly from traditional insurance contracts. DCCs do not require the bank to take an investment risk or make payment to the borrower's estate. The loan simply is extinguished when the borrower dies. Thus, the court reasoned, ''the primary and traditional concern behind state insurance regulation—the prevention of [the insurer's] insolvency—is not of concern to a borrower who opts for a debt cancellation contract.''[9] The court concluded that further support for its holding that DCCs do not constitute the ''business of insurance'' derives from the fact that national banks fulfilling their obligations under DCCs do not implicate this central concern of insurance regulation.[10]

In 1996, the OCC amended the interpretive ruling (renumbered as § 7.1013) to expressly include offering DCCs for the disability of the borrower, in addition to death.[11] The OCC also has issued various interpretive letters concerning DCCs and DSAs over the years.[12] In 1998, for example, the OCC confirmed that a national bank may offer DSAs as well as DCCs, as part of its express authority to make loans.[13]

*The OCC's Rulemaking*

On January 26, 2000, the OCC published in the **Federal Register** an advance notice of proposed rulemaking (ANPR) requesting comment on whether regulations addressing DCCs and DSAs were necessary or appropriate (65 FR 4176).[14] In particular, in the ANPR, we noted the absence of a comprehensive Federal consumer protection scheme governing DCCs and DSAs.

We OCC received 41 comments in response to the ANPR. Commenters were evenly divided on whether additional regulations were necessary. On balance, we agreed with those who favored additional standards in this area.

On April 18, 2001, we published a notice of proposed rulemaking (NPRM) requesting comment on proposed regulations governing DCCs and DSAs (66 FR 19901). The preamble to the proposal said that the proposed rules were designed to facilitate consumers' informed choice about whether to purchase DCCs or DSAs, to discourage unfair or abusive sales practices, and to promote national banks' ability to offer DCCs and DSAs on a safe and sound basis.

The OCC received 51 comment letters in response to the NPRM.[15] The commenters included bank trade associations, national banks, credit card companies, and consumer groups. Comments were also filed by insurance trade associations, insurance companies, and State insurance regulators. Finally, we received comments from a number of individuals and companies. The vast majority of commenters favored the proposed regulation, but most of these commenters recommended changes.

The final rule makes a number of changes to the proposal, many in response to suggestions provided by commenters. The next section of this discussion sets out a general overview of the final rule.

## II. Overview

The final rule includes the following significant features:

- It codifies the OCC's longstanding position that DCCs and DSAs are permissible banking products.
- It establishes important safeguards to protect against consumer confusion and areas of potential customer abuse. In particular, the final rule prohibits national banks from offering lump sum, single premium DCCs or DSAs in connection with residential mortgage loans.
- The rule provides for standardized disclosures of key information in connection with the offer and sale of DCCs and DSAs. The disclosure requirements are structured to accommodate widely used methods of marketing DCCs and DSAs, including telephone solicitations, mail inserts, and so-called ''take one'' applications.
- To the extent feasible, the rules apply consumer protections modelled on the framework of consumer protections that Congress directed the OCC (and the other Federal banking agencies) to apply to banks' insurance sales. National banks are familiar with these insurance sales requirements, which are contained in part 14 of the OCC's regulations, and the approach taken in the final rule enables banks to harmonize their policies, procedures, and employee training programs across the two product lines.
- The rule addresses safety and soundness considerations presented by DCCs and DSAs by requiring national banks to manage the risks associated with these products according to safe and sound banking principles,

(Mar. 26, 1964); James J. Saxon, Statement of the Comptroller of the Currency on Debt Cancellation Contracts and Their Relation to State Law (May 18, 1964); James J. Saxon, Letter to the Presidents of all National Banks (July 21, 1964).

[5] James J. Saxon, *Statement of the Comptroller of the Currency on Debt Cancellation Contracts and Their Relation to State Law* (May 18, 1964).

[6] *See First Nat'l Bank of Eastern Arkansas* v. *Taylor,* 907 F.2d 775(8th Cir.), *cert. denied,* 498 U.S. 972 (1990).

[7] ''Because national banks are considered federal instrumentalities, states may neither prohibit nor unduly restrict their activities. Thus, the National Bank Act preempts the Commissioner's authority to prohibit FNB from offering debt cancellation contracts.'' *Id.* at 778 (citations omitted).

[8] The court recognized that whether an activity falls within the ''business of insurance'' for purposes of the McCarran-Ferguson Act is a federal question and not determined by State law defining insurance. *Id.* at 780, n.8 (citing *SEC* v. *Variable Annuity Life Ins. Co.,* 359 U.S. 65, 69(1959)). *See also Steele* v. *First Deposit Nat'l Bank,* 732 So.2d 301 (Ala. Civ. App. 1999) (finding a credit protection debt deferral product was not within the meaning of the ''business of insurance'').

[9] *Taylor,* 907 F.2d at 780.

[10] *See id.*

[11] *See* 61 FR 4849 (Feb. 9, 1996).

[12] *See, e.g.,* Interpretive Letter No. 641 (Jan. 7, 1994); Interpretive Letter No. 827 (Apr. 3, 1998); Interpretive Letter No. 903 (Dec. 28, 2000).

[13] *See* Interpretive Letter No. 827 (Apr. 3, 1998).

[14] The comments we received on the ANPR are summarized in the notice of proposed rulemaking (66 FR 19901, Apr. 18, 2001).

[15] Several commenters filed multiple comments.

including appropriate recognition and financial reporting of income, expenses, assets, and liabilities associated with DCCs and DSAs, adequate internal controls, and risk mitigation measures.

Section III of this preamble discussion describes the most significant comments we received on the proposed rule and responds to the commenters' principal concerns. Section IV summarizes the final rule.

**III. Summary of Comments**

*Authority, Purpose, and Scope (Section 37.1)*

The proposed rule removed 12 CFR 7.1013 and replaced it with 12 CFR 37.1. Section 37.1(a) stated the authority of national banks under 12 U.S.C. 24 (Seventh) to enter into both DCCs and DSAs and to charge a fee for these products. Section 37.1(b) set forth the purposes of the new regulations. Section 37.1(c) stated that the regulations applied to the provision of DCCs and DSAs by national banks and Federal branches and agencies. In addition, it clarified that the sale of DCCs and DSAs are governed by new part 37 and not by 12 CFR 14 (Consumer Protections for Depository Institution Sales of Insurance).

Applicability of State Law

Many commenters sought clarification about the regulatory framework that governs DCCs and DSAs. They urged the OCC to clarify that DCCs and DSAs offered by national banks are not subject to regulation under State insurance law. One commenter, however, asserted that DCCs and DSAs are ''authorized'' insurance products under the Gramm-Leach-Bliley Act (GLBA)[16] and that States have express authority to regulate them as insurance, subject only to the preemption standards set forth in section 104 of the GLBA.

As is described in the *Background* section of this preamble discussion, DCCs and DSAs are banking products authorized under 12 U.S.C. 24(Seventh). This final rule, together with any other applicable requirements of Federal law and regulations, are intended to constitute the entire framework for uniform national standards for DCCs and DSAs offered by national banks. Accordingly, the final rule states that DCCs and DSAs are regulated pursuant to Federal standards, including part 37, and not State law.

Establishment of Fees

Many commenters urged that the OCC regulate the amount of fees banks can charge for DCCs and DSAs. The premise of a number of these comments was the assertion that DCCs and DSAs are substitute products for credit insurance. These commenters contended that the market for DCCs is analogous to the market for credit insurance, which is characterized by ''reverse competition.'' ''Reverse competition'' refers to market conditions that result in increased prices because insurers compete with each other for the business of the agents who control placement of the product. To obtain this business, insurance companies pay high commissions or provide other compensation or services, resulting in higher costs that are then passed on to the consumer. These commenters expressed concern that disclosure requirements are inadequate to address this market failure, and they recommended that the OCC impose the same type of regulation—including fee, form, and claims regulation—on the sale of DCCs or DSAs as is commonly required by State insurance regulators with respect to the sale of credit insurance.

For several reasons, we decline to depart from the basic regulatory approach we proposed, although the final rule does contain enhanced consumer protection features beyond those contained in the proposal. First, as the *Taylor* court explained, DCCs and DSAs are distinct from credit insurance as a matter of law. Moreover, we see no evidence that the market for DCCs and DSAs suffers from the same flaws as the commenters assert prevail in the credit insurance market. Issuers of DCCs and DSAs do not compete to enlist independent, third-party sellers to place their product. Instead, every national bank that issues DCCs or DSAs is its *own* seller because these products are provided in conjunction with loans that the bank itself makes. Commenters provided no evidence of impairment in the market for DCCs and DSAs, but instead relied on concerns regarding distortions and abuses in the credit insurance market. Thus, we cannot conclude that the strongest reason given by the commenters in support of fee regulation—dysfunction in the market that disclosures are inadequate to overcome—is present in the market for DCCs and DSAs. Moreover, as the rule's express prohibition on tying makes clear, the choice of purchasing the product is left exclusively to the customer. We have concluded, therefore, that a regulatory approach that includes price controls as a primary component is not warranted.

The OCC's regulations reflect the fact that national banks may set fees subject to standards of prudent banking practices. Section 7.4002 of our rules authorizes national banks to establish non-interest charges and fees ''according to sound banking judgment and safe and sound banking principles.''[17] A bank satisfies this standard if it employs a decision making process to set fees that involves consideration of four factors identified in the regulation. The standards of § 7.4002 apply to the fees charged by a national bank for a DCC or DSA.

Several commenters stated that, in some cases, either banks do not charge customers a fee for a DCC or DSA or a third party pays the fee. These commenters urged the OCC to clarify that the regulation does not apply if the customer does not pay a fee for the DCC or DSA, or to create an exemption to some of the provisions of the rule. We have not modified the final rule in this way because, in our view, such a modification could create an incentive for banks to evade the requirements of the rule. This could occur if, for example, a bank structures its fees so that it does not explicitly charge the customer for a DCC or DSA but builds that fee into some other component of the transaction.

For these reasons, §§ 37.1(a), (b), and (c) are substantively the same in the final rule as in the proposal, with certain stylistic changes to improve clarity. For stylistic purposes, the regulation text uses both the terms ''extension of credit'' and ''loan;'' we do not intend this usage to create any substantive distinctions. In addition, we have added a phrase in subsections (a) and (c) to clarify that DCCs and DSAs are offered in connection only with extensions of credit made by the same bank.

*Definitions (section 37.2)*

The proposed rule defined a DCC as a contract entered into between a bank and its customer providing for cancellation of all or part of the amount a customer owes under an extension of credit from that bank upon the occurrence of a specified event. A DSA was similarly defined as a contract entered into between a bank and its customer providing for suspension of all or part of the customer's obligation to repay an extension of credit from that bank upon the occurrence of a specified event. The rule used the term ''bank'' to include a national bank as well as a Federal branch or agency. A customer was defined as an individual who obtains a loan or other extension of credit from a bank primarily for personal, family or household purposes.

[16] Pub. L. No. 106–102, 113 Stat. 1338 (Nov. 12, 1999).

[17] 12 CFR 7.4002(b)(2).

A number of commenters sought clarification of the terms defined in the proposal, and we have, accordingly, made a number of clarifying changes to the text. For example, many commenters were concerned that the definitions of a DCC and a DSA implied that they are products separate from the underlying extension of credit. The text of the final rule adds language to clarify this point.

The final rule makes stylistic changes in all the definitions and adds five definitions: actuarial method, closed-end credit, contract, open-end credit, and residential mortgage loan. In response to suggestions from commenters, we have added a sentence to the definition of a DSA to clarify that the rule does not cover so-called ''skip-a-payment'' agreements in which the triggering event for a deferral arrangement is either the borrower's unilateral election to defer payment or the bank's unilateral decision to allow a deferral of repayment. The rule covers ''hybrid'' arrangements that contain both debt suspension and debt cancellation features. It also covers DSAs where interest continues to accrue during the suspension period, as well as DSAs where the accrual of interest is suspended.

Both the proposal and the final rule require that if a refund feature is part of the DCC or DSA, the bank must compute that refund using a method no less favorable to the consumer than the actuarial method. In response to requests from commenters, the final rule defines that term. The rule adopts the definition of ''actuarial'' found in the Truth in Lending Act (TILA), because banks are already familiar with the TILA definition and its implementation in the Federal Reserve Board's Regulation Z.[18] For the same reason, the terms ''open-end credit'' and ''closed-end credit'' are defined based on Regulation Z.[19]

For purposes of the prohibition on single-payment fees for DCCs and DSAs issued in connection with residential mortgage loans, we have added the term ''residential mortgage loan'' and defined it to mean a loan secured by one-to-four family, residential property.

Finally, the rule adds the new term ''contract'' as a less cumbersome, short-form reference to a debt cancellation contract or a debt suspension agreement in the remainder of the regulation text.

*Prohibited Practices (section 37.3)*

Anti-Tying Provision

The proposed rule contained several types of customer protections that would be standard when a bank provides products associated with a loan, including an anti-tying provision precluding a bank from extending credit or changing the terms or conditions of an extension of credit conditioned upon the purchase of a DCC or DSA from the bank.

Several commenters supported the anti-tying prohibition. These commenters thought that a bank's authority to deny a consumer's request for credit gives the bank a unique ability to seek to coerce consumers to purchase a DCC or DSA. They asserted that disclosures alone are not effective to dispel the potentially coercive effect that tying has in this context.[20]

A number of commenters opposed this provision, however. These commenters offered different objections, depending on their view of the effect on these products of the anti-tying provision in section 106 of the Bank Holding Company Act Amendments of 1970.[21] Section 106 generally forbids a bank from extending credit, leasing or selling property, furnishing services, or fixing or varying prices of these transactions, on the condition or requirement that the customer obtain additional credit, property, or service from the bank, subject to certain exceptions. One of these exceptions, the statutory ''traditional bank product'' exemption, permits a bank to extend credit, lease or sell property, furnish services, or fix or vary prices on these transactions, on the condition that a customer obtain a loan, discount, deposit or trust service from the same bank.[22] Some commenters argued that section 106 does not apply because DCCs and DSAs are an integral term of the loan agreement and the tying prohibition only applies to *separate* products. Others thought that section 106 applies but would operate to permit tying either because the DCC or DSA is part of the loan and section 106 permits the tying of loan products, or because the DCC or DSA is a ''traditional bank product'' and may be tied to a loan on that basis. On the other hand, one commenter argued that the rule's anti-tying provision is unnecessary because section 106 already applies to prohibit tying a loan to a customer's purchase of a DCC or DSA from the bank.

DCCs and DSAs may be offered and purchased either contemporaneously with the other terms of the loan agreement or subsequent to the execution of that agreement. In either case, the effect of the DCC or DSA is to extinguish or suspend the borrower's obligation to repay under the otherwise operative provisions of the loan. Since a bank's ability to adjust the terms of loan repayment is an integral component of its authority to lend, in our view, a DCC or DSA could properly be treated as a component of the loan and, as such, would not be subject to the tying prohibitions in section 106 because a DCC or DSA is a term of the loan rather than a separate product. Thus, the final rule retains a tying prohibition specifically applicable to DCCs and DSAs.

Misleading Practices

The proposed rule prohibited a bank from engaging in any practice that could mislead a reasonable person with respect to the information that the proposal required to be disclosed.

Several commenters objected to the ''reasonable person'' standard on the grounds that it was vague, subjective, or so broad that it would be impossible to enforce.[23] Yet, the proposed standard was very similar to the standard governing misleading practices found in the regulations of the OCC (and the other Federal banking agencies) implementing consumer protections in the insurance sales context.[24] National banks' sale of DCCs and DSAs, which may be solicited and marketed using methods similar to insurance solicitation and marketing, can present similar consumer protection issues as

[18] See 15 U.S.C. 1615(d)(1). See also 12 CFR 226, app. J (appendix to the Federal Reserve Board's Regulation Z, implementing the TILA, explaining the use of the actuarial method for purposes of computing the annual percentage rate).

[19] See 12 CFR 226.2(20) and 226.2(10), respectively.

[20] In support of this view, one commenter cited a study indicating that even when consumers receive disclosures informing them that the lender's decision to grant a loan is not conditioned on the purchase of insurance, some consumers still believe that there is a connection between their ability to obtain the loan or to obtain favorable loan terms and their purchase of insurance. See John M. Barron & Michael E. Staten, *Credit Research Center, Purdue University, Credit Insurance: Rhetoric and Reality* (1994).

[21] Section 106 is codified at 12 U.S.C. 1972.

[22] *See* 12 U.S.C. 1972(1)(A).

[23] A few commenters also argued that this provision is unnecessary because national banks are already subject to the prohibitions in the Federal Trade Commission Act against fraud and misleading or deceptive advertising. Section 5 of the Federal Trade Commission Act (15 U.S.C. 41 *et seq.*) (FTC Act) generally prohibits ''unfair or deceptive acts or practices in or affecting commerce.'' The prohibition retained in the final rule is consistent with, but not duplicative of, the standards in the FTC Act.

[24] *See* 12 CFR 14.30(b). This provision is included in part 14 of the OCC's regulations, which implements the insurance sales consumer protections prescribed by section 305 of the GLBA. The statute requires the regulators to prohibit advertising or statements that could mislead any person or cause a reasonable person to reach an erroneous belief with respect to several enumerated facts. *See* 12 U.S.C. 1831x (codifying section 305 of the GLBA).

the sale of insurance products. Moreover, national banks are already generally familiar with the standard contained in the insurance sales regulations. Thus, the final rule retains the substance of the prohibition as proposed but with changes in wording so that the language conforms more closely with the language of part 14. We have also added an express reference to misleading advertisements, as well as practices, to make clear that the scope of the prohibition is no less than that in part 14.

Unilateral Modification of the Contract

The proposed rule prohibited a bank from retaining a unilateral right to modify or cancel the contract.

A commenter representing several organizations supported this provision, but the majority of the commenters who addressed it either were opposed or recommended modifications. Many commenters stated that modifying the terms of credit is standard business practice in the credit card industry. They noted that modifications are subject to the protections of the TILA and Regulation Z, which permit changes in certain terms upon notice and agreement by the customer. Other commenters suggested that the OCC create an exemption in the case of customers who pay the fee on a monthly basis and have the right to cancel at any time. Several commenters urged the OCC to permit banks to make unilateral changes, provided the change benefits the customer.

The OCC remains of the view that retaining a unilateral right to modify or cancel the DCC or DSA, whether the product is associated with open-or closed-end credit, has the potential to be abusive because it could be exercised in such a way as to deny a customer debt relief for which the customer has paid. We agree, however, that some of the circumstances described by the commenters do not present this potential for abuse. Accordingly, the final rule excepts unilateral changes from the prohibition in two circumstances: first, if the modification is favorable to the customer and is made without additional charge to the customer; and, second, if the customer is notified of the proposed change and provided a reasonable opportunity to cancel the contract without penalty before the change goes into effect. For example, the OCC would generally regard a 30-day notice period as reasonable. This time period is consistent with the time requirements imposed by TILA in an analogous situation.[25] The final rule does not require that the contract language specify the circumstances under which the bank may make a unilateral modification, though inclusion of explicit provisions in the contract may be helpful to avoid misunderstandings. Rather, the rule operates to prohibit the bank from requiring its customer to abide by a unilateral modification unless it meets one of the exceptions described in the rule.

Single, Lump Sum Payment

Several commenters urged the OCC to include in the final rule a provision prohibiting banks from requiring a customer to pay the fee for a DCC or DSA in a single payment. These commenters focused on abuses that have occurred in the sale of credit insurance in the subprime market for residential mortgage loans and argued that the sale of DCCs and DSAs present a similar potential for abuse. They noted that customers who pay the fee in a single payment routinely add the amount of the fee to the amount borrowed, which means that customers will pay interest on the fee for the life of the loan. They contended that lenders marketing credit insurance target borrowers who are unsophisticated about financial products and thus unlikely to realize that financing the fee has the effect of reducing the homeowner's equity in his or her home.

The issues identified with respect to single premium credit insurance in the home mortgage market are particularly problematic because they highlight practices targeting consumers whose economic choices may be circumscribed or who may be especially vulnerable to predatory sales practices. Moreover, we are aware, as commenters pointed out, that some large financial institutions have voluntarily abandoned the practice of financing single payment credit insurance premiums for home mortgage loans. In addition, both Fannie Mae and Freddie Mac have announced that they will no longer purchase mortgages that carry single premium credit insurance.[26] The reaction of these market participants supports the conclusion that the potential for abuse in the marketing and sale of these products outweighs any potential consumer benefits.

In the absence of evidence that the abuses identified by the commenters are occurring in the DCC or DSA market, we have declined to adopt an across-the-board prohibition on lump sum fees. We remain concerned, however, that abuses similar to those occurring in the credit insurance market not develop with respect to DCCs or DSAs provided in connection with home mortgage loans. To guard against that result, the final rule prohibits a national bank from requiring a customer to pay the fee for a DCC or DSA in a single payment, payable at the outset of the contract, if the debt that is the subject of the contract is a residential mortgage loan. The rule permits single payment contracts in the case of all other consumer loans, but requires banks that offer the option of paying the fee in a single payment to also offer the *bona fide* option of paying for that contract in periodic payments. In such cases, the bank must also make certain disclosures related to the fee.

Terms Not Routinely Enforced

The proposed rule prohibited a bank from including in a DCC or DSA any term that the bank routinely does not enforce.

Twelve commenters addressed this provision and they unanimously opposed it. They contended, among other things, that it sets a standard that is unclear and difficult to administer. In addition, they argued that the provision could harm customers because it would have a chilling effect on banks' flexibility to work with customers to resolve delinquent debt issues and rehabilitate credit relationships. Several commenters stated that legal means already exist to address instances in which the failure routinely to enforce a term would mislead consumers, such as the OCC's general authority to enforce unfair or deceptive business practices laws applicable to national banks.

We agree with these commenters that this prohibition would be counterproductive if it produced the unintended result of deterring banks from negotiating with their customers to work out or restructure delinquent debt. Accordingly, we have deleted this prohibition from the final rule.

*Refunds of Fees in the Event of Termination of the Agreement or Prepayment of the Covered Loan (section 37.4)*

The proposal required a bank that provides a no-refund DCC or DSA also to offer a product that provides for a refund of the unearned portion of the

[25] The types of changes that might occur if a bank made a unilateral modification to a DCC or DSA are analogous to changes for which Regulation Z requires 30 days prior notice. *See, e.g.*, 12 CFR 226.9(e) and (f).

[26] *See Freddie Mac Unveils Policy on Insurance To Protect Borrowers,* Wall St. J., Mar. 27, 2000, at A6; *Fannie Mae Chairman Announces New Loan Guidelines to Combat Predatory Lending Practices,* New Release (Fannie Mae), Apr. 11, 2000.

fee in the event of termination of the agreement or prepayment of the covered loan. In addition, the proposal required banks to calculate the amount of any refund due a customer based on a method at least as favorable to the customer as the actuarial method.

Several commenters opposed this provision. Some argued that fees charged in connection with DCCs and DSAs should be treated the same as any other fee a bank charges in connection with a loan. Others thought that no-refund DCCs and DSAs are inherently unfair to consumers and recommended that the OCC prohibit them. Many commenters stated that the refund provision should not apply to open-end credit where customers pay for DCCs or DSAs on a month-to-month basis.

As we noted in the proposal, some banks that offer DCCs and DSAs may structure those products so that the customer does not receive a refund of any unearned portion of the fee paid for the product if the DCC or DSA is terminated or the customer prepays the loan covered by the contract. Banks have suggested that customers benefit from a ''no-refund'' product because the total fee paid by the customer is substantially less than the fee that would be charged for the same product with a fee refund feature. On the other hand, a no-refund product could be structured in a way that is unfair to customers if, for example, the customer pays most of the fee early in the term of the contract but also prepays the loan well before the end of the term.

We continue to believe that the approach that best balances encouraging banks to provide a viable choice of products for consumers with discouraging unfair practices is to require banks to offer both options so that a customer can choose between a lower total fee or the availability of a refund. In our view, the potential for unfairness in a no-refund product lies principally in the fact that the customer may be induced to pay ''up front'' for coverage that he or she never receives because the loan is prepaid. This result is substantially mitigated if the consumer has the option of DCC or DSA coverage on a ''pay as you go'' basis.

Accordingly, the final rule retains this provision (as renumbered) with one substantive change. The text of the final rule requires that a bank that offers a no-refund DCC or DSA must also offer the customer a *bona fide* option to purchase a comparable contract that provides for a refund. The option to purchase is *bona fide* if the refund product is not deliberately structured in such a way, including pricing of the product, as to deter a customer from selecting that option.

In response to questions raised by commenters, we clarify that the refund provision does not apply in the case of open-end credit where customers pay for the contract on a month-to-month basis. In that case, there are no ''unearned'' fees to refund. Nor does it apply if the fee for the contract is paid by the bank or some other third party rather than the customer.

If a customer is entitled to a refund, the amount due the customer may vary greatly depending on the method used to calculate the refund. The two most commonly used formulas for computing refunds are ''the Rule of 78's'' and the actuarial method. Under the Rule of 78's, a customer will receive a substantially lower refund than if the actuarial method had been used to compute the refund. Because application of the Rule of 78's creates substantial inequities for the customer, the final rule retains the requirement that banks calculate the amount of any refund due a customer based on a method at least as favorable to the customer as the actuarial method. As described earlier in this discussion, we have added to the final rule a definition of the term ''actuarial method.''

*Method of Payment of Fees (section 37.5)*

As we have described, section 37.3(c)(2) prohibits a bank from requiring a customer to pay the fee for a DCC or a DSA in a single lump sum where the associated credit is a residential mortgage loan. Several commenters urged the OCC to prohibit a bank from requiring a customer to pay the fee for *any* DCC or DSA in a single payment. While we do not believe the available evidence supports that result, we agree that single payment fees have potential to be problematic even outside the home mortgage loan context. Accordingly, for DCCs or DSAs associated with any other type of loan, § 37.5 of the final rule requires a bank that offers a customer the option to pay the fee for a contract in a single payment also to offer that customer a *bona fide* option to pay the fee for that contract in periodic payments. The option is ''*bona fide*'' if it is not deliberately priced in such a way as to deter a customer from selecting that option.

*Disclosures (section 37.6)*

Content of Short and Long Form of Disclosures in General

The proposed rule listed eight disclosures that a bank, where applicable, was required to give.

Many commenters objected to the number of required disclosures. They noted that banks already are required to provide disclosures under the TILA and argued that the new disclosures were too burdensome for banks and too confusing for customers. Several commenters who supported rate, form, and claims regulation similar to the regulation of the insurance industry challenged the usefulness of disclosures and criticized the OCC for relying too heavily on disclosures. For the reasons we have earlier described, in our view, regulation of DCCs and DSAs as if they were insurance products is not appropriate. We agree with the commenters who thought the proposed disclosure requirements could be improved, however.

Therefore, the final rule retains much of the content of the disclosures prescribed by the proposal, but revises the disclosure process so that it more readily accommodates the methods banks use to market and sell DCCs and DSAs. The final rule specifies which disclosures must be given at different stages of the marketing and sales process and provides forms of disclosure that serve as models for satisfying the requirements of the rule.

In the final rule the disclosures have been reorganized into two types: a short form of disclosure suitable for use in telemarketing and various abbreviated written solicitations, and a more detailed long form of disclosure that a customer generally will receive prior to purchasing the contract. A sample short form is provided as Appendix A to the regulation and a sample long form is provided as Appendix B. Use of these forms is not mandatory. A bank may adjust the form and wording of its disclosures so long as the requirements of the regulation are met. Because many of the disclosures will appear in both the short and long form, we discuss the short and long form disclosures together.

Anti-Tying Disclosure

The proposed rule required a bank to inform the customer that neither its decision whether to approve a loan nor the terms and conditions of the loan are conditioned on the purchase of a DCC or DSA from the bank.

Commenters opposed to the anti-tying prohibition also opposed the anti-tying disclosure. Most of these commenters contended that the anti-tying disclosure is necessary only if the DCC or DSA is being sold while a customer's application for credit is pending. If the OCC retains this disclosure, they recommended creating an exemption for

DCCs and DSAs sold subsequent to the extension of credit.

As described earlier in this discussion, the final rule retains the prohibition on tying either the availability or the terms of credit to a customer's purchase of a DCC or DSA. Because the effectiveness of the prohibition is greatly enhanced if the customer knows that the bank may not tie DCCs or DSAs to its loan products, the final rule also retains the requirement that the bank provide an anti-tying disclosure. The disclosure appears in both the short form and long form and, insofar as appropriate,[27] is similar in content to the anti-tying disclosure required by the insurance sales consumer protection rules. The appendices suggest a wording that is simpler than the text of the proposed rule, however, and contain a statement that purchase of the product is optional and will not affect either the bank's credit decision or the terms of credit already extended.

Explanation of Effect of Debt Suspension Agreement

Certain commenters asserted that there is a potential for increased customer confusion regarding DSAs when compared with credit disability insurance products and DCCs where disability is the triggering event. They noted that these products are similar to DSAs in that they address the health status of customers in relation to their ability to continue employment. In response to these commenters' suggestions, the final rule requires a bank to explain in the long form the nature of a debt suspension agreement. The bank must disclose that if a customer activates the agreement, the customer's duty to pay the loan principal and interest is only suspended and the customer must fully repay the loan after the period of suspension has expired.

Disclosure of the Amount of the Fee

The proposed rule required a bank to inform customers of the total fee for the DCC or DSA.

Many commenters argued that it is not possible to compute the total fee for a DCC sold in connection with open-end credit because the fee is based on the customer's outstanding balance which fluctuates from month to month. The commenters urged the OCC to eliminate this disclosure in the case of open-end credit or to adopt a more flexible alternative. Most commenters recommended that an appropriate disclosure would be the unit-cost approach under Regulation Z or the formula used to compute the fee.

We agree that it may be impracticable to require disclosure of the amount of the fee at the time the bank first solicits the purchase of a DCC or DSA, particularly in the case of open-end credit. The final rule therefore requires a bank to make disclosures regarding the amount of the fee only in the long form. However, the disclosure must differ depending on whether the credit is open-end or closed-end. In the case of closed-end credit, the bank must disclose the total fee. In the case of open-end credit, the bank must either: (1) disclose that the periodic fee is based on the account balance multiplied by a unit-cost and provide the unit-cost, or (2) disclose the formula used to compute the fee.

Disclosure Concerning Lump Sum Payment of Fee

The proposed rule required a bank to disclose the method of payment, including whether the payment would be collected in a single payment or periodic payments, and whether the fee was included in the loan amount.

Only two commenters directly addressed this disclosure. One commenter recommended that the OCC eliminate this disclosure, and the second commenter stated that this disclosure would be confusing in the context of open-end credit.

The final rule modifies this disclosure to reflect the requirements in § 37.5. As modified, this disclosure, which is included in both the short and long form, requires a bank to disclose, where appropriate, that a customer has the option to pay the fee in a single payment or in periodic payments. This disclosure is not appropriate in the case of a DCC or DSA provided in connection with a home mortgage loan, since, under the final rule, the option to pay the fee in a single payment is not available in that case. The rule also requires a bank to disclose that adding the fee to the amount borrowed will increase the cost of the contract.

Disclosure Concerning Lump Sum Payment of Fee With No Refund

The proposed rule required a bank to disclose, if applicable, that the customer is not entitled to a refund of the unearned portion of the fee in the event the customer terminates the contract or prepays the loan prior to the scheduled termination date, and that the customer has the option of purchasing a DCC or DSA that provides for a refund in those circumstances.

A few commenters urged the OCC to clarify that this disclosure does not apply to open-end credit accounts where the fee is billed monthly. One commenter recommended that the OCC replace this disclosure with a statement as to whether the customer will be entitled to a refund of the unearned portion of the fee in the event the customer terminates the contract or prepays the loan in full prior to the scheduled termination date.

In response to these comments, the final rule deletes part of this disclosure and adds a new sentence. The revised disclosure appears in both the short and long form. The final rule eliminates the requirement that a bank must state whether or not the customer will be entitled to a refund of the unearned portion of the fee in the event the customer terminates the contract or prepays the loan in full prior to the scheduled termination date. Instead, if a customer may elect to pay the fee in a single payment, the rule requires a bank to disclose that the customer has the option to choose a contract with or without a refund provision. An additional sentence in both the short and long form states that prices of refund and no-refund products are likely to differ.

Disclosure Concerning Refund of Fee Paid in Lump Sum

A bank's cancellation policy may be a material factor in a customer's decision whether to purchase the product, particularly if the customer has elected to pay the fee for a DCC or DSA in a single payment and also has elected to finance the fee. The final rule accordingly requires, at § 37.5, that (for DCCs or DSAs associated with loans other than residential mortgage loans) if a bank permits a customer to pay the fee in a single payment and to add the fee to the amount borrowed, the bank must disclose the bank's cancellation policy. This disclosure is required in both the short and long form. It apprises the customer that the DCC or DSA may be canceled at any time for a refund, within a specified number of days for a full refund, or at any time with no refund. The method the bank uses to calculate any refund due is addressed in § 37.4(b).

Disclosure Concerning Whether Use of Credit Line Is Restricted

The proposed rule required a bank to inform a customer if the customer's activation of the contract would prohibit

[27] *See* 12 CFR 14.40(b)(2). The insurance sales rules also require a bank to disclose that it may not condition an extension of credit on its customer's *not* obtaining insurance from an entity unaffiliated with the bank. A similar disclosure is not appropriate in the case of a DCC or DSA, since the DCC or DSA must be offered by the bank extending the credit.

the customer from incurring additional charges or using the credit line.

Only two commenters addressed this disclosure. One commenter contended that the phrase ''activation of the debt cancellation contract'' might be ambiguous and suggested that the OCC clarify that this phrase refers to the customer's assertion of the right to cancel or suspend payments on the debt. The second commenter recommended that the OCC amend this disclosure to state that it does not apply to closed-end loans.

The final rule retains this disclosure, but only in the long form because the information, while relevant to the customer's final decision to purchase a DCC or DSA, is not necessarily central to the customer's initial evaluation of the product.

Disclosure Concerning Termination of a DCC or DSA

The proposed rule required a bank to explain the circumstances under which a customer or the bank could terminate the contract if termination is permitted during the life of the loan.

Two commenters urged the OCC to eliminate this disclosure. One of these commenters argued that it was unnecessary and burdensome and recommended that the OCC require this information to be contained in the DCC, provided the customer has 30 days within which to cancel the DCC. The final rule retains this disclosure, but requires it only in the long form.

Additional Disclosures To Be Provided

The final rule adds a disclosure in the short form requiring banks to inform consumers that the bank will provide additional information before the customer is required to pay for the product. The adjustments made in the rule to accommodate marketing practices that do not lend themselves to detailed disclosures mean that some important information will not be conveyed when the bank first solicits the purchase of a DCC or DSA. This disclosure apprises the customer that more information will be available for consideration before the customer is obligated to pay for the product.

Disclosure Pertaining to Eligibility Requirements, Conditions, and Exclusions

The proposed rule required a bank to describe any material limitations relating to the DCC or DSA.

Many commenters objected to this disclosure, and the majority of them urged the OCC to eliminate it. They contended that the term ''material limitations'' is ambiguous and creates the potential for litigation over its meaning.

Several commenters noted that the ''material limitations'' are included in the contract that is mailed to the customer. They said that almost all of the provisions of a DCC impact in some way on the customer's ability to collect benefits and these limitations are therefore so lengthy that they are not suitable for disclosures apart from the contract. Commenters recommended a number of alternatives, including modifying the required timing of the disclosure and permitting a bank to refer the customer to the contract for a description of its limitations.

The final rule retains this disclosure. The DCC and DSA contracts we have reviewed often contain provisions imposing requirements on a customer's eligibility to claim benefits under the contract, or conditions or exclusions that could effectively preclude the customer from obtaining those benefits. Examples include: imposing a waiting period before a customer may activate benefits; limiting the number of payments a customer may defer; limiting the term of coverage to a specific number of months; limiting the maximum amount of indebtedness the bank will cancel; or terminating coverage when the customer reaches a particular age. Knowledge of these limitations may be dispositive to the customer's decision whether to purchase the product. Moreover, disclosing them may enable the bank to avoid sales practices that could subject it to substantial reputation or litigation risk.

We have modified the disclosure significantly, however, to address the concerns expressed by the commenters. In both the short and long form, the final rule replaces the phrase ''material limitations'' with the phrase ''eligibility requirements, conditions and exclusions'' and requires a bank to disclose that these features could prevent a customer from receiving benefits under the contract. The content of the short and long form may vary, depending on whether a bank elects to provide a summary of the conditions and exclusions in the long form disclosures or refer the customer to the pertinent paragraphs in the contract. The short form requires a bank to instruct the customer to read carefully both the long form disclosures and the contract for a full explanation of the terms of the contract. In response to commenters' suggestions, the long form gives a bank the option of either separately summarizing the limitations or advising the customer that a complete explanation of the eligibility requirements, conditions, and exclusions is available in the contract and identifying the paragraphs where a customer may find that information.

Disclosure Concerning Procedures

The proposed rule required a bank to describe the procedures a customer must follow to notify the bank that a triggering event has occurred.

Several commenters contended that disclosing this information would be lengthy and cumbersome, particularly if the DCC was offered in connection with a credit card or other marketing material where available space is limited. Some of these commenters urged the OCC to eliminate this disclosure while others proposed permitting a bank to deliver this information to a customer post-sale.

We agree that, while this information is relevant to a customer who has purchased the contract and wishes to activate the debt suspension or debt cancellation feature, it is unlikely to be a factor in the customer's decision whether to purchase the product. Therefore, the final rule eliminates the requirement for this disclosure.

*Disclosure Requirements; Timing and Method of Disclosures (Section 37.6(c))*

The proposal required a bank to provide certain disclosures to a customer before the customer completes the purchase of a DCC or DSA. It also required that the disclosures be made in writing, or electronically, if done in a manner consistent with the requirements of the Electronic Signatures in Global and National Commerce Act (15 U.S.C. 7001 *et seq.*) (E-Sign).

Most commenters objected to the requirement that the disclosures be made in writing as impracticable where a bank advertises or solicits the purchase of DCCs or DSAs through telemarketing, so-called ''take one'' applications, statement inserts, and direct mail solicitations. Commenters recommended a variety of alternatives to the proposal, including mailing written disclosures to the customer within a prescribed number of days or permitting the customer to cancel the product without charge. A number of commenters urged the OCC to adopt the approach of Regulation Z, which permits a bank to make limited initial disclosures in the case of open-end credit if the bank provides the full disclosures before the customer is obligated to pay, and permits oral disclosures in certain cases.

The final rule makes significant modifications in the timing and method requirements. It addresses the concerns raised by the commenters by

establishing different timing and method requirements for short form and long form disclosures. Creating two separate forms also eliminates the need for banks to provide the most detailed and complicated information—information about eligibility requirements, conditions, and exclusions that limit the customer's ability to obtain benefits—in the short form.

Section 37.6(c)(1) requires a bank to disclose certain information in the short form orally at the time the bank first solicits the purchase of a contract. Section 37.6(c)(2) requires a bank to disclose the applicable information in the long form in writing before the customer completes the purchase of the contract. However, if the bank solicits a customer's purchase of a DCC or DSA in person—for example, at the time the customer applies for credit in person—then the bank must also provide the long form disclosures in writing at that time.

The final rule creates special exceptions for transactions by telephone, solicitations through written materials such as mail inserts or ''take one'' applications, and electronic transactions. The first exception, in § 37.6(c)(3), addresses the concern that lengthy disclosures are not practical for solicitations via telemarketing. Under the telemarketing exception, banks may give the short form disclosures orally, provided they mail the written disclosures within 3 days after the telephone solicitation. These telemarketing provisions are similar to those in the insurance sales consumer protection rules with which banks are already familiar.[28] The rule requires that the customer have an opportunity to review the more detailed information before being obligated to pay for the contract.

The second exception, in § 37.6(c)(4), is for written solicitations such as mail inserts and ''take one'' applications. Similar to the telemarketing exception, it permits a bank to give only the short form disclosures in mail inserts or ''take one'' applications where space is limited, provided the bank mails the written disclosures within 3 days after the customer contacts the bank to respond to the solicitation. The effect of this exception is the same as the effect of the provision in the insurance sales consumer protection rules that covers mail and ''take one'' solicitations. No oral disclosures are required and the short form disclosures may be made in this written material.

The third exception, in § 37.6(c)(5), permits disclosures to be made electronically in a manner consistent with the requirements of E-Sign.

*Form of Disclosures (Section 37.6(d))*

Proposed § 37.6(c) required disclosures to be clear, conspicuous, readily understandable, and designed to call attention to the nature and significance of the information provided.

The only commenter that addressed the form of the disclosures thought that Regulation Z sets forth a standard for disclosures and that a new standard is unnecessary.

In our view, however, the better model for requirements as to form is part 14 of the OCC's rules, which governs products that are often marketed and sold using methods similar to the methods used to market and sell DCCs and DSAs. Accordingly, the final rule modifies this provision so that its text is more similar to part 14.[29] Section 37.7(d)(1) therefore requires that the disclosures must be simple, direct, readily understandable and designed to call attention to the nature and significance of the information provided. Section 37.7(d) requires that the disclosures must be meaningful. The examples of methods, such as spacing and type style, that a bank could use to satisfy the requirements for the form of disclosures have not been changed.

*Advertisements and Other Promotional Material for Debt Cancellation Contracts and Debt Suspension Agreements (Section 37.6(e))*

As described earlier, the final rule conforms more closely with part 14[30] because it covers advertising and promotional material. *See* § 37.3(b). Accordingly, the final rule adds a new subsection (e) requiring that short form disclosures must be made in advertisements and promotional material for DCCs unless the advertising and promotional material is of a general nature describing or listing the services or products offered by the bank.

*Affirmative Election to Purchase and Acknowledgment of Receipt of Disclosures Required (Section 37.7 )*

Proposed § 37.4 required that the customer affirmatively elect to purchase a DCC or DSA in writing in a document that was separate from the documents pertaining to the credit transaction. The proposal permitted the acknowledgment to be made electronically if the bank complied with the requirements of E-Sign.

Most of the commenters who addressed this provision opposed it because, they said, the written election would have the effect of curtailing or prohibiting current marketing practices. They urged the OCC to eliminate these requirements or to modify them to permit oral elections with certain safeguards.

Several commenters stressed that requiring separate documents also would create significant compliance difficulties in the case of ''take one'' credit applications where space is limited to a single sheet of paper, and in the case of auto financing, where procedures are not as readily monitored by the bank. Many commenters contended that this provision was not consistent with the TILA, which permits a customer's affirmative election to be in the same document as the loan contract.

The final rule retains the requirement that the bank obtain the customer's affirmative election to purchase a DCC or DSA before obligating the customer to pay for the product. We have made substantial revisions, however, to address the commenters' concerns about the effects of the proposed requirements on methods widely used to market DCCs and DSAs and to conform the rule with the insurance sales regulations with which banks already are familiar. The final rule also adds a requirement, like that contained in the insurance sales regulations, that the bank obtain a customer's written acknowledgment of receipt of the disclosures required by § 37.6.[31]

In the case of telephone solicitations, the final rule permits the customer's affirmative election to be made orally, provided the bank: (1) Maintains sufficient documentation to show that the customer received the short form disclosures and then affirmatively elected to purchase the contract; (2) mails the affirmative written election and written acknowledgment, together with the long form disclosures to the customer within 3 business days after the telephone solicitation, and maintains sufficient documentation to show that it made reasonable efforts to obtain the documents from the customer; and (3) permits the customer to cancel the purchase of the contract without penalty within 30 days after the bank has mailed the long form disclosures to the customer.

In the case of solicitations conducted through written materials such as mail inserts or ''take one'' applications, the final rule permits the bank to provide

[28] *See* 12 CFR 14.40(c)(3).

[29] *See* 12 CFR 14.40(c)(5) and (6).

[30] *See* 12 CFR 14.40(d).

[31] See 12 CFR 14.40(c)(7).

only the short form disclosures in the written materials, provided the bank mails the acknowledgment of receipt of disclosures and the long form disclosures to the customer within 3 business days, beginning on the first business day after the customer contacts the bank or otherwise responds to the solicitation. The bank may not obligate the customer to pay for the contract until after the bank receives the customer's written acknowledgment of receipt of disclosures, unless the bank: (1) Maintains sufficient documentation to show that the bank provided the acknowledgment of receipt of disclosures to the customer as required by this section; (2) maintains sufficient documentation to show that the bank made reasonable efforts to obtain from the customer a written acknowledgment of receipt of the long form disclosures; and (3) permits the customer to cancel the purchase of the contract without penalty within 30 days after the bank has mailed the long form disclosures to the customer.

The final rule also eliminates the requirement that the customer's election to purchase be in a separate document, and thus better harmonizes this provision with the requirements of the TILA.[32] Similarly, the rule imposes no requirement that the customer's written acknowledgment of receipt of disclosures be in a separate document. The final rule clarifies that the standard for the form of the election and acknowledgment information is the same as for the form of disclosures (which is also the same standard contained in part 14 of our rules). The information must be conspicuous, simple, direct, readily understandable, and designed to call attention to their significance. The rule also adds a statement that the election and acknowledgment will satisfy these standards if they conform with the requirements in § 37.6.

Finally, the provision in proposed § 37.4 permitting the customer's affirmative election to be made electronically has been moved to § 37.7(d) and modified to include the customer's acknowledgment of receipt of the disclosures.

[32] Regulation Z permits a creditor to exclude from the finance charge the charge or premium paid for voluntary debt cancellation coverage provided certain conditions are met. One of those conditions requires that the consumer sign or initial an affirmative written request for coverage after receiving the disclosures required by Regulation Z, but there is no requirement that the affirmative written request be contained in a separate document. *See* 12 CFR 226.4(d)(3)(i)(C).

*Safety and Soundness Requirement (Section 37.8)*

The OCC's prior regulation on DCCs (12 CFR 7.1013) permitted, but did not require, banks to establish the reserves necessary to enable them to enter into DCCs. The proposed rule *required* national banks to establish a separate loss reserve and to maintain the reserve at a level adequate to conduct this business in a safe and sound manner. As an alternative, the proposed rule also permitted a national bank to obtain third-party insurance to cover ''expected losses.''

The commenters were divided about whether the OCC should retain the proposed requirement for an ''identifiable loss reserve.'' Some commenters, however, pointed out that the reserve requirement, as drafted, may not accurately reflect current accounting practices and the standards established by generally accepted accounting principles for recording the income and liabilities associated with DCCs and DSAs. One commenter, for example, said that the OCC should distinguish between reserve requirements for DCCs, which are based on future losses in the credit accounts and already included in the loan loss reserves, and DSAs, which need only address foregone interest payments. This commenter also said that losses on the two types of products may vary widely and that banks should be permitted to reserve separately on each.

The OCC's recent supervisory experience indicates that methodologies for recognizing losses may appropriately vary depending on whether the product requires the bank to forgive the debt or only forego interest income for a period of time. These methodologies vary further and are more complex if the product has both debt cancellation and debt suspension features or if the bank securitizes the loans associated with the DCCs or DSAs.

For these reasons, we have concluded that the loss reserve requirement contained in the proposal is not sufficiently flexible to permit appropriate management and recording of anticipated losses in the variety of situations that occur in actual practice. Accordingly, the final rule replaces that requirement with a requirement that banks must establish and maintain effective risk management and control processes over its DCCs and DSAs. Such processes include appropriate recognition and financial reporting of income, expenses, assets, liabilities, and appropriate treatment of all expected and unexpected losses associated with the products. The final rule also requires a bank to assess the adequacy of its internal control and risk mitigation activities, which would include, if appropriate, the bank's purchase of third-party insurance, in view of the nature and scope of its DCC and DSA programs.

## IV. Summary of the Final Rule

New part 37 defines the relevant terms, including ''debt cancellation contract'' and ''debt suspension agreement.''

The rule prohibits certain practices for banks that provide DCCs or DSAs. These practices are: tying the approval or terms of an extension of credit to a customer's purchase of a DCC or DSA; engaging in misleading advertisements or practices; retaining a right to modify a DCC or DSA unilaterally, unless the modification benefits the customer or the customer has a reasonable opportunity to cancel without penalty; and charging a single, lump-sum fee for a DCC or DSA issued in connection with a residential mortgage loan.

The rule permits a bank to offer a DCC or DSA that makes no provision for a refund of fees but, if the bank does so, it also must offer the customer a *bona fide* option to buy the product that includes a refund feature.

For loans other than residential mortgage loans, the bank may offer the customer the option of paying the fee for the associated DCC or DSA in a single, lump sum; but if it does, it also must offer a *bona fide* option of paying the fee for that contract in monthly or other periodic payments. If the bank offers the option to finance the single payment fee, it must disclose to the customer whether the customer may cancel the product and receive a refund and any time limits that apply to the customer's right to cancel.

The rule also requires that national banks disclose certain information to their customers. The rule accommodates the methods that national banks use to market DCCs and DSAs by permitting the use of abbreviated disclosures in marketing circumstances—including telephone solicitations and ''take one'' applications—where full disclosure of the terms most relevant to the consumer's decision to purchase is not practicable.

The abbreviated or ''short form'' disclosures that the rule requires include:

- Disclosure that the decision to buy a DCC or DSA is optional and whether or not the customer purchases the product will not affect the customer's application for credit or terms of any existing loan;

• Disclosure that if a no-refund product is offered, a product with a refund feature also is available;

• Disclosure for DCCs or DSAs offered in connection with loans other than residential mortgage loans, that if the customer may elect to finance a single payment, lump sum fee, the customer also has the option to pay the fee in periodic payments, and a statement about the effect of the customer's cancellation of the DCC or DSA before expiration of the term of the loan;

• A statement that the customer will receive additional information before being obligated to pay for the DCC or DSA; and

• A statement that certain eligibility requirements, conditions, and exclusions apply that may affect the customer's ability to claim benefits under the DCC or DSA are described more fully in the ''long-form'' disclosures that the rule also requires.

The ''long-form'' disclosures may be given after the bank's initial marketing occurs but generally must be given prior to the completion of the sale of the product. If the solicitation occurs when the customer applies for credit in person, then the long form disclosures must be given at that time. The information required to be disclosed in the long form includes:

• Disclosure that the decision to buy a DCC or DSA is optional and whether or not the customer purchases the product will not affect the customer's application for credit or terms of any existing loan;

• Disclosure that in the case of a DSA, the DSA only suspends, and does not cancel, the customer's obligation to pay the associated debt;

• Disclosure, if applicable, that the customer may not incur additional charges under its loan agreement if the DCC or DSA is activated;

• An explanation of the circumstances in which the customer has the right to cancel the DCC or DSA; and

• A description of any applicable eligibility requirements, conditions, or exclusions, which may be provided either in the disclosure form itself or by reference to particular provisions of the DCC or DSA.

The disclosure requirements are complemented by a requirement that a national bank generally obtain the customer's written acknowledgment of his or her receipt of the required disclosures and an affirmative election to purchase the DCC or DSA before completing the sale. Like the disclosure requirements, these provisions of the rule are also tailored to accommodate the use of sales methods—such as by telephone—where immediate receipt of a written acknowledgment is not practicable.

The rule requires that disclosures and acknowledgments and affirmative elections be presented in a form that is simple, direct, readily understandable, and designed to call attention to the nature and significance of the information provided. Disclosures must also be meaningful, and the rule gives examples of methods—such as spacing and type styles—that may be used to satisfy that standard.

Appendices to the rule contain the two sample forms of disclosure: the ''short form'' for use in situations where the abbreviated disclosures may be used, and the ''long form'' for use thereafter to ensure that the customer is adequately informed about the key terms of the DCC or DSA prior to completing the purchase. Banks are required to make only the disclosures that are appropriate to the product offered. The forms of disclosure are illustrative of the wording and format a bank could use to comply with the rule's disclosure requirements. Banks that make disclosures in a form substantially similar to the forms provided in the rule will be deemed to satisfy the disclosure requirements. These particular forms are not mandatory, however, and a bank may elect to use different wording or a different format, as long as the approach chosen satisfies the substance of the applicable requirements.

Finally, the rule contains a safety and soundness requirement that a national bank that offers DCCs or DSAs must manage the risks associated with these products in accordance with safe and sound banking principles.

The rule also requires a bank to establish and maintain effective risk management and control processes, including appropriate recognition and financial reporting of income, expenses, assets, and liabilities associated with the products and adequate internal control and risk mitigation measures.

Effective Date

Two commenters requested that the OCC delay the effective date of the final rule until one year from the date of its publication. Another commenter requested a delayed effective date of six months to a year. Each of these commenters stressed that the rule will require banks that currently offer DCCs and DSAs to review their programs, create new forms, and train employees to comply with new procedures. One commenter thought that the adjustments to marketing and methods necessary to implement the regulations governing DCCs would be comparable to those required to implement the consumer protections for bank sales of insurance, which also required new disclosures. Part 14 originally had an effective date of 120 days, but that transition period was later extended to a total of nine months.

The final rule has a delayed effective date of nine months. We agree with the commenters that we should be guided by our experience in implementing part 14. The final rule requires two types of disclosures and prohibits a number of practices that currently are not barred. Furthermore, unlike the sale of insurance products, DCCs and DSAs are offered in connection with an extension of credit, which will require banks to coordinate the disclosures in the final rule with disclosures they are required to make under TILA.

## V. Regulatory Analysis

### *A. Paperwork Reduction Act*

In accordance with the requirements of the Paperwork Reduction Act of 1995, the OCC may not conduct or sponsor, and a respondent is not required to respond to, an information collection unless it displays a currently valid Office of Management and Budget (OMB) control number.

The OCC submitted the collection of information requirements contained in the notice of proposed rulemaking to the Office of Management and Budget (OMB) for review and received approval under OMB Control Number 1557–0224.

The revision of the collection of information requirements contained in this final rule have been submitted to the OMB for review.

The final rule retains much of the content of the disclosures prescribed by the proposed rule, but revises the disclosure process so that it more readily accommodates the methods banks use to market and sell DCCs and DSAs. The final rule specifies which disclosures must be given at different stages of the marketing and sales process.

The final rule provides two forms of disclosure that serve as models for satisfying the requirements of the rule. Those two disclosure forms are set forth in appendices to the final rule. Appendix A sets out a short form of disclosure suitable for use in telemarketing and various written solicitations, while Appendix B provides a more detailed long form of disclosure that a customer generally will receive prior to purchasing the contract. Use of the forms is not mandatory. A

bank may adjust the form and wording of its disclosures so long as the requirements of the regulation are met.

The final rule generally requires a bank to disclose information about a DCC or DSA orally in the short form and in writing in the long form. In the case of solicitations through written materials such as mail inserts or ''take one'' applications, however, the bank may provide the short form disclosures in writing. The final rule also permits short and long form disclosures to be made electronically.

Comments Received

The OCC received two comments regarding the burden imposed by the proposed rule. Both commenters stated that the amount of time required to develop the required disclosures was greater than the OCC's estimate of 10 hours. The first commenter, a large national bank, stated that developing the required disclosures would involve approximately 25 hours to consider legal, operational, and marketing issues. However, if the disclosures were modified in accordance with the recommendations in its comment letter, the commenter estimated that the amount of time would be approximately 15 hours. We believe that modifications to the timing and manner of the required disclosures address most of the commenter's objections.

Notwithstanding these changes, upon further consideration of the paperwork burdens likely to be imposed as a result of the final rule, the OCC has estimated that the burden imposed on the average national bank offering DCCs and DSAs is likely to be 24 hours per bank.

The second commenter mentioned the increased burden associated with the requirements that the disclosures be in writing and separate from the loan application. The commenter contended that, particularly for credit cards banks, the total cost of creating, print, and distributing new forms could outweigh any benefit a national bank might gain from selling DCCs and DSAs. As described in the discussion above, modifications in the proposed rule eliminate the separate document requirement and permit oral disclosure in certain circumstances. In addition, we believe that the 9-month delayed effective date will enable banks to minimize costs. They should have sufficient lead time to deplete their current supply of forms, revise forms to be used once the rule becomes effective, and include the required disclosure in their next print run.

Disclosure Requirements

Section 37.6 requires a bank to provide the following disclosures, as appropriate:

• *Anti-tying disclosure*—The final rule requires a bank to inform the customer that neither its decision whether to approve a loan nor the terms and conditions of the loan are conditioned on the purchase of a DCC or DSA. This disclosure appears in both the short form and the long form (''This product is optional'').

• *Explanation of debt suspension agreement*—The final rule requires a bank to disclose that if a customer activates the agreement, the customer's duty to pay the loan principal and interest is only suspended and the customer must fully repay the loan after the period of suspension has expired. This disclosure appears in the long form (''Explanation of debt suspension agreement'').

• *Disclosure of the amount of the fee*—The final rule requires a bank to make disclosures regarding the amount of the fee. The disclosure must differ depending on whether the credit is open-end or closed-end. In the case of closed-end credit, the bank must disclose the total fee. In the case of open-end credit, the bank must either: (1) disclose that the periodic fee is based on the account balance multiplied by a unit cost and provide the unit cost, or (2) disclose the formula used to compute the fee. This disclosure appears in the long form (''Amount of fee'').

• *Disclosure concerning lump sum payment of fee*—The final rule requires a bank to disclose, where appropriate, that a customer has the option to pay the fee in a single payment or in periodic payments. This disclosure is not appropriate in the case of a DCC or DSA provided in connection with a home mortgage loan since, under the final rule, the option to pay the fee in a single payment is not available in that case.

The final rule also requires a bank to disclose that adding the fee to the amount borrowed will increase the cost of the contract. This disclosure appears in the both the short form and long form (''Lump sum payment of fee'').

• *Disclosure concerning lump sum payment of fee with no refund*—The final rule requires a bank to disclose that the customer has the option to choose a contract with or without a refund provision. This disclosure appears in both the short form and long form (''Lump sum payment of fee with no refund''). This disclosure also contains a sentence that states that prices of refund and no-refund products are likely to differ.

• *Disclosure concerning refund of fee paid in lump sum*—The final rule requires that if a bank permits a customer to pay the fee in a single payment and to add the fee to the amount borrowed, the bank must disclose the bank's cancellation policy. The disclosure informs the customer that the DCC or DSA may be canceled at any time for a refund, within a specified number of days for a full refund, or at any time with no refund. This disclosure appears in both the short form and long form (''Refund of fee paid in lump sum'').

• *Disclosure concerning whether use of credit line is restricted*—The final rule requires a bank to inform a customer if the customer's activation of the contract would prohibit the customer from incurring additional charges or using the credit line. This disclosure appears in the long form (''Use of card or credit line restricted'').

• *Disclosure concerning termination of a DCC or DSA*—The final rule requires a bank to explain the circumstances under which a customer or the bank could terminate the contract if termination is permitted during the life of the loan. This disclosure appears in the long form (''Termination of [PRODUCT NAME]'').

• *Disclosure concerning additional disclosures*—The final rule requires a bank to inform consumers that the bank will provide additional information before the customer is required to pay for the product. This disclosure appears in the short form (''Additional disclosures'').

• *Disclosure pertaining to eligibility requirements, conditions, and exclusions*—The final rule requires a bank to describe any material limitations relating to the DCC or DSA. This disclosure appears on both the short form and the long form (''Eligibility requirements, conditions, and exclusions''). The content of the short and long form may vary, depending on whether a bank elects to provide a summary of the conditions and exclusions in the long form disclosures or refer the customer to the pertinent paragraphs in the contract. The short form requires a bank to instruct the customer to read carefully both the long form disclosures and the contract for a full explanation of the terms of the contract. The long form gives a bank the option of either separately summarizing the limitations or advising the customer that a complete explanation of the eligibility requirements, conditions, and exclusions is available in the contract

and identifying the paragraphs where a customer may find that information.

Affirmative Election To Purchase and Acknowledgment of Receipt of Disclosures Required

Section 37.7 requires a bank to obtain a customer's written affirmative election to purchase a contract and written acknowledgment of receipt of the disclosures required by § 37.6.

If the sale of the contract occurs by telephone, the customers affirmative election to purchase and acknowledgment of receipt of the required short form may be made orally, provided the bank maintains certain documentation.

If the contract is solicited through written materials such as mail inserts or ''take one'' applications and the bank provides only the short form disclosures in the written materials, then the bank shall mail the acknowledgment, together with the long form disclosures, to the customer. The bank may not obligate the customer to pay for the contract until after the bank has received the customer's written acknowledgment of receipt of disclosures unless the bank maintains certain documentation.

The affirmative election and acknowledgment may also be made electronically.

Burden Estimate

The estimated total annual burden with respect to extensions of credit will depend on the number of banks that offer DCCs and DSAs, the number of consumer loan transactions per bank per year where disclosures are provided, and the amount of time per transaction. The OCC cannot at this time accurately estimate the total number of participating banks or the total number of consumer loan transactions in which disclosures are provided to individual customers because the OCC does not currently collect this type of data. Solely for the purpose of complying with the Paperwork Reduction Act, the OCC has estimated the annual paperwork burden assuming that 2,200 national banks will provide DCCs and DSAs, and the average burden associated with developing the disclosures would be approximately 24 hours.

The likely respondents are national banks.

*Estimated number of respondents:* 2,200 respondents.

*Estimated number of responses:* 2,200 responses.

*Estimated burden hours per response:* 24 hours.

*Estimated total annual burden hours:* 52,800 hours.

Comments

The OCC requests comment on appropriate ways to estimate the total number of participating banks, the total number of consumer loan transactions in which these disclosures will be provided to individual customers, and the burden associated with developing the disclosures and providing the disclosures to individual customers.

The OCC will revisit the burden estimates when we have more information on the number of potential respondents and consumer loan transactions. The revised estimates will also reflect all comments received concerning the burden estimates.

The OCC also invites comment on:

Whether the collection of information contained in this final rule is necessary for the proper performance of the OCC's functions, including whether the information has practical utility;

The accuracy of the OCC's estimate of the burden of the information collection;

Ways to enhance the quality, utility, and clarity of the information to be collected;

Ways to minimize the burden of the information collection on the respondents, including the use of automated collection techniques or other forms of information technology; and

Estimates of capital or start-up costs and costs of operation, maintenance, and purchase of services to provide information.

Comments on the collection of information should be sent by mail to Joseph F. Lackey, Jr., Desk Officer, Office of Information and Regulatory Affairs, Attention: 1557–0224, Office of Management and Budget, Washington, DC 20503, or by e-mail to *jlackeyj@omb.eop.gov*.

Comments should also be sent to Jessie Dunaway, OCC Clearance Officer, Legislative and Regulatory Activities Division, Attention: 1557–0224, Office of the Comptroller of the Currency, 250 E Street, SW, Mailstop 8–4, Washington, DC 20219. Due to disruptions in the OCC's mail service, commenters are encouraged to send comments by fax to (202) 874–4889, or by e-mail to *jessie.dunaway@occ.treas.gov*.

*B. Regulatory Flexibility Act*

Pursuant to section 605(b) of the Regulatory Flexibility Act, 5 U.S.C. 605(b) (RFA), the regulatory flexibility analysis otherwise required under section 604 of the RFA is not required if the agency certifies that the rule will not have a significant economic impact on a substantial number of small entities and publishes its certification and short, explanatory statement in the **Federal Register** along with its rule.

Pursuant to section 605(b) of the RFA, the OCC hereby certifies that this rulemaking will not have a significant economic impact on a substantial number of small entities.

The final rule will apply only to those national banks that choose to offer DCCs or DSAs. However, the OCC has very limited data as to the number of national banks that currently offer these products. For purposes of this analysis, we have conservatively assumed that all national banks will offer these products.

Compliance and Recordkeeping Requirements of the Final Rule

The final rule imposes the following conditions or requirements:

- A national bank that offers a DCC or DSA with no refund of unearned fees in the event the customer terminates the DCC or DSA must also offer that customer the bona fide option to purchase the product with a refund feature;
- A national bank is prohibited from requiring a customer to pay the fee for a DCC or DSA in a single payment, payable at the outset of the contract, if the debt that is the subject of the contract is a residential mortgage loan;
- A national bank must provide customers with the short form disclosures at the time of solicitation;
- A national bank must provide customers with the long form disclosures before the customer completes the purchase of a DCC or DSA;
- A national bank must obtain a customer's written affirmative election to purchase the DCC or DSA; and
- A national bank must obtain a customer's written acknowledgment of receipt of the disclosures.

The rule provides banks significant flexibility in meeting these requirements. For example, in the case of telephone solicitations the rule permits an oral affirmation, provided the bank makes reasonable efforts to obtain a written affirmative election, and waives the requirement obtain a written acknowledgment, provided the bank makes reasonable efforts to obtain the acknowledgment. A bank that takes advantage of the special exceptions must maintain sufficient documentation to demonstrate that it made reasonable efforts to obtain the written affirmative election and written acknowledgment.

Costs Associated With Compliance and Recordkeeping Requirements of the Final Rule

Based on input from OCC examiners and other staff, we have determined that national banks typically offer refundable products and are moving away from offering customers a lump sum DCC or DSA in conjunction with a mortgage loan. We have therefore concluded that there will be only minimal costs associated with complying with the requirement that a bank offer offers a DCC or DSA with a no refund DCC or DSA must also offer that customer the bona fide option to purchase the product with a refund feature and the prohibition on paying the fee in a single, lump sum. Accordingly, our cost estimate focuses on costs associated with the short form disclosure, long form disclosure, affirmative election, and written acknowledgment.

We expect that national banks will incur four types of costs associated with these requirements: (1) Development of the short form disclosure, long form disclosure, affirmative election and acknowledgment forms; (2) distribution of the documents; (3) documentation requirements; and (4) employee training.

We estimate these costs per bank to be $4,992. To determine whether this will have a significant impact on small banks, we considered the average annual net income for a small bank, which was $796,000 as of March 31, 2002. In light of the fact that these costs are approximately 0.6 percent of net income, we do not find them to be significant.

*C. Executive Order 12866*

The OCC has determined that the final rule does not constitute a ''significant regulatory action'' for the purposes of Executive Order 12866. Under the most conservative cost scenarios that the OCC can develop on the basis of available information, the impact of the proposal falls short of the thresholds established by the Executive Order.

*D. Executive Order 13132*

Executive Order 13132 requires Federal agencies, including the OCC, to certify their compliance with that Order when they transmit to the Office of Management and Budget (OMB) any draft final regulation that has Federalism implications. Under the Order, a regulation has Federalism implications if it has ''substantial direct effects on the States, on the relationship between the national government and the States, or on the distribution of power and responsibilities among the various levels of government.'' In the case of a regulation that has Federalism implications and that preempts State law, the Order imposes certain consultation requirements with State and local officials; requires publication in the preamble of a Federalism summary impact statement; and requires the OCC to make available to the Director of the OMB any written communications submitted to us by State and local officials. By the terms of the Order, these requirements apply to the extent that they are practicable and permitted by law and, to that extent, must be satisfied before the OCC promulgates a final regulation.

Some commenters raised issues concerning whether DCCs and DSAs should be regulated as insurance that could be construed as falling within the scope of Executive Order 13132. In the opinion of the OCC, however, the final regulation on DCCs and DSAs does not have Federalism implications. The GLBA designates the States as the appropriate functional regulators of national bank insurance activities.[33] As we have described earlier in this preamble discussion, as a matter of law DCCs and DSAs are not insurance, but rather, bank products. This conclusion was confirmed, as to DCCs, by the *Taylor* case decided in 1990. The reasoning and conclusions of the *Taylor* court are equally applicable to DSAs. Because these products are bank products and not insurance the framework of State insurance regulation would not apply to them, even in the absence of Federal regulations. While this regulation establishes new standards that govern national banks providing DCCs and DSAs, the standards are therefore not in derogation of State insurance law or regulation. For this reason, the regulation does not directly affect the States, substantially or otherwise; it does not alter the relationship between the national government and the States; and it does not alter the distribution of power and responsibilities among the various levels of government.

Since the regulation does not satisfy any of the components of the definition of actions that have Federalism implications under Executive Order 13132, the provisions of the Executive Order do not apply. The OCC nonetheless believes that it has in material respects satisfied the requirements of the Order. First, the OCC has received and considered a number of comments from State insurance authorities, as described earlier in the preamble. In addition, at the end of the public comment period and very early in the development of the final rule, on June 18, 2001, senior representatives of the OCC met with members of the National Association of Insurance Commissioners (NAIC). The concerns of the NAIC were memorialized in its written comment which is a part of the record of this rulemaking. Principally, the NAIC urged the OCC to adopt DCC/DSA regulations that were similar to the rate, form, and claims regulation imposed on insurance products under many State insurance regulatory regimes. For the reasons described earlier in this preamble, including the reason that DCCs and DSAs are not insurance, the OCC declined to follow that recommendation. Finally, prior to the publication of this final rule, the OCC has transmitted to the Director of OMB the written communications—that is, the comment letters—we have received from State officials.

*E. Unfunded Mandates Act of 1995*

Section 202 of the Unfunded Mandates Act of 1995 (Unfunded Mandates Act) requires that an agency prepare a budgetary impact statement before promulgating a rule that includes a Federal mandate that may result in the annual expenditure of $100 million or more in any one year by State, local, and tribal governments, in the aggregate, or by the private sector. If a budgetary impact statement is required, section 205 of the Unfunded Mandates Act requires an agency to identify and consider a reasonable number of alternatives before promulgating a rule.

The OCC has determined that the final rule will not result in expenditures by State, local, and tribal governments, or by the private sector, of $100 million or more in any one year. Accordingly, the OCC has not prepared a budgetary impact statement or specifically addressed the regulatory alternatives considered.

Solicitation of Comments on Use of ''Plain Language''

Section 722 of the GLBA requires that the Federal banking agencies use ''plain language'' in all proposed and final rules published after January 1, 2000. We invite your comments on how to make the proposed rules easier to understand.

**List of Subjects**

*12 CFR Part 7*

Credit, Insurance, Investments, National banks, Reporting and

[33] GLBA sec. 301, *codified at* 15 U.S.C. 6711.

recordkeeping requirements, Securities, Surety bonds.

*12 CFR Part 37*

Banks, banking, Consumer protection, Debt cancellation contract, Debt suspension agreement, National banks, Reporting and recordkeeping requirements, Safety and soundness.

**Authority and Issuance**

For the reasons set forth in the preamble, the OCC amends part 7 of chapter I of Title 12 of the Code of Federal Regulations and adds a new part 37 as follows:

## PART 7—BANK ACTIVITIES AND OPERATIONS

1. The authority citation for part 7 continues to read as follows:

**Authority:** 12 U.S.C. 1 *et seq.*, 93a, and 1818.

2. Section 7.1013 is removed.

3. Add part 37 to read as follows:

## PART 37—DEBT CANCELLATION CONTRACTS AND DEBT SUSPENSION AGREEMENTS

Sec.
37.1 Authority, purpose, and scope.
37.2 Definitions.
37.3 Prohibited practices.
37.4 Refunds of fees in the event of termination or prepayment of the covered loan.
37.5 Method of payment of fees.
37.6 Disclosures.
37.7 Affirmative election to purchase and acknowledgment of receipt of disclosures required.
37.8 Safety and soundness requirement.
Appendix A to Part 37—Short Form Disclosures
Appendix B to part 37—Long Form Disclosures

**Authority:** 12 U.S.C. 1 *et seq.*, 24(Seventh), 93a, 1818.

### § 37.1 Authority, purpose, and scope.

(a) *Authority.* A national bank is authorized to enter into debt cancellation contracts and debt suspension agreements and charge a fee therefor, in connection with extensions of credit that it makes, pursuant to 12 U.S.C. 24(Seventh).

(b) *Purpose.* This part sets forth the standards that apply to debt cancellation contracts and debt suspension agreements entered into by national banks. The purpose of these standards is to ensure that national banks offer and implement such contracts and agreements consistent with safe and sound banking practices, and subject to appropriate consumer protections.

(c) *Scope.* This part applies to debt cancellation contracts and debt suspension agreements entered into by national banks in connection with extensions of credit they make. National banks' debt cancellation contracts and debt suspension agreements are governed by this part and applicable Federal law and regulations, and not by part 14 of this chapter or by State law.

### § 37.2 Definitions.

*For purposes of this part:*

(a) *Actuarial method* means the method of allocating payments made on a debt between the amount financed and the finance charge pursuant to which a payment is applied first to the accumulated finance charge and any remainder is subtracted from, or any deficiency is added to, the unpaid balance of the amount financed.

(b) *Bank* means a national bank and a Federal branch or Federal agency of a foreign bank as those terms are defined in part 28 of this chapter.

(c) *Closed-end credit* means consumer credit other than open-end credit as defined in this section.

(d) *Contract* means a debt] cancellation contract or a debt suspension agreement.

(e) *Customer* means an individual who obtains an extension of credit from a bank primarily for personal, family or household purposes.

(f) *Debt cancellation contract* means a loan term or contractual arrangement modifying loan terms under which a bank agrees to cancel all or part of a customer's obligation to repay an extension of credit from that bank upon the occurrence of a specified event. The agreement may be separate from or a part of other loan documents.

(g) *Debt suspension agreement* means a loan term or contractual arrangement modifying loan terms under which a bank agrees to suspend all or part of a customer's obligation to repay an extension of credit from that bank upon the occurrence of a specified event. The agreement may be separate from or a part of other loan documents. The term *debt suspension agreement* does not include loan payment deferral arrangements in which the triggering event is the borrower's unilateral election to defer repayment, or the bank's unilateral decision to allow a deferral of repayment.

(h) *Open-end credit* means consumer credit extended by a bank under a plan in which:

(1) The bank reasonably contemplates repeated transactions;

(2) The bank may impose a finance charge from time to time on an outstanding unpaid balance; and

(3) The amount of credit that may be extended to the customer during the term of the plan (up to any limit set by the bank) is generally made available to the extent that any outstanding balance is repaid.

(i) *Residential mortgage loan* means a loan secured by 1–4 family, residential real property.

### § 37.3 Prohibited practices.

(a) *Anti-tying.* A national bank may not extend credit nor alter the terms or conditions of an extension of credit conditioned upon the customer entering into a debt cancellation contract or debt suspension agreement with the bank.

(b) *Misrepresentations generally.* A national bank may not engage in any practice or use any advertisement that could mislead or otherwise cause a reasonable person to reach an erroneous belief with respect to information that must be disclosed under this part.

(c) *Prohibited contract terms.* A national bank may not offer debt cancellation contracts or debt suspension agreements that contain terms:

(1) Giving the bank the right unilaterally to modify the contract unless:

(i) The modification is favorable to the customer and is made without additional charge to the customer; or

(ii) The customer is notified of any proposed change and is provided a reasonable opportunity to cancel the contract without penalty before the change goes into effect; or

(2) Requiring a lump sum, single payment for the contract payable at the outset of the contract, where the debt subject to the contract is a residential mortgage loan.

### § 37.4 Refunds of fees in the event of termination or prepayment of the covered loan.

(a) *Refunds.* If a debt cancellation contract or debt suspension agreement is terminated (including, for example, when the customer prepays the covered loan), the bank shall refund to the customer any unearned fees paid for the contract unless the contract provides otherwise. A bank may offer a customer a contract that does not provide for a refund only if the bank also offers that customer a *bona fide* option to purchase a comparable contract that provides for a refund.

(b) *Method of calculating refund.* The bank shall calculate the amount of a refund using a method at least as favorable to the customer as the actuarial method.

**§ 37.5 Method of payment of fees.**

Except as provided in § 37.3(c)(2), a bank may offer a customer the option of paying the fee for a contract in a single payment, provided the bank also offers the customer a *bona fide* option of paying the fee for that contract in monthly or other periodic payments. If the bank offers the customer the option to finance the single payment by adding it to the amount the customer is borrowing, the bank must also disclose to the customer, in accordance with § 37.6, whether and, if so, the time period during which, the customer may cancel the agreement and receive a refund.

**§ 37.6 Disclosures.**

(a) *Content of short form of disclosures.* The short form of disclosures required by this part must include the information described in appendix A to this part that is appropriate to the product offered. Short form disclosures made in a form that is substantially similar to the disclosures in appendix A to this part will satisfy the short form disclosure requirements of this section.

(b) *Content of long form of disclosures.* The long form of disclosures required by this part must include the information described in appendix B to this part that is appropriate to the product offered. Long form disclosures made in a form that is substantially similar to the disclosures in appendix B to this part will satisfy the long form disclosure requirements of this section.

(c) *Disclosure requirements; timing and method of disclosures*—(1) *Short form disclosures.* The bank shall make the short form disclosures orally at the time the bank first solicits the purchase of a contract.

(2) *Long form disclosures.* The bank shall make the long form disclosures in writing before the customer completes the purchase of the contract. If the initial solicitation occurs in person, then the bank shall provide the long form disclosures in writing at that time.

(3) *Special rule for transactions by telephone.* If the contract is solicited by telephone, the bank shall provide the short form disclosures orally and shall mail the long form disclosures, and, if appropriate, a copy of the contract to the customer within 3 business days, beginning on the first business day after the telephone solicitation.

(4) *Special rule for solicitations using written mail inserts or ''take one'' applications.* If the contract is solicited through written materials such as mail inserts or ''take one'' applications, the bank may provide only the short form disclosures in the written materials if the bank mails the long form disclosures to the customer within 3 business days, beginning on the first business day after the customer contacts the bank to respond to the solicitation, subject to the requirements of § 37.7(c).

(5) *Special rule for electronic transactions.* The disclosures described in this section may be provided through electronic media in a manner consistent with the requirements of the Electronic Signatures in Global and National Commerce Act, 15 U.S.C. 7001 *et seq.*

(d) *Form of disclosures*—(1) *Disclosures must be readily understandable.* The disclosures required by this section must be conspicuous, simple, direct, readily understandable, and designed to call attention to the nature and significance of the information provided.

(2) *Disclosures must be meaningful.* The disclosures required by this section must be in a meaningful form. Examples of methods that could call attention to the nature and significance of the information provided include:

(i) A plain-language heading to call attention to the disclosures;

(ii) A typeface and type size that are easy to read;

(iii) Wide margins and ample line spacing;

(iv) Boldface or italics for key words; and

(v) Distinctive type style, and graphic devices, such as shading or sidebars, when the disclosures are combined with other information.

(e) *Advertisements and other promotional material for debt cancellation contracts and debt suspension agreements.* The short form disclosures are required in advertisements and promotional material for contracts unless the advertisements and promotional materials are of a general nature describing or listing the services or products offered by the bank.

**§ 37.7 Affirmative election to purchase and acknowledgment of receipt of disclosures required.**

(a) *Affirmative election and acknowledgment of receipt of disclosures.* Before entering into a contract the bank must obtain a customer's written affirmative election to purchase a contract and written acknowledgment of receipt of the disclosures required by § 37.6(b). The election and acknowledgment information must be conspicuous, simple, direct, readily understandable, and designed to call attention to their significance. The election and acknowledgment satisfy these standards if they conform with the requirements in § 37.6(b) of this part.

(b) *Special rule for telephone solicitations.* If the sale of a contract occurs by telephone, the customer's affirmative election to purchase may be made orally, provided the bank:

(1) Maintains sufficient documentation to show that the customer received the short form disclosures and then affirmatively elected to purchase the contract;

(2) Mails the affirmative written election and written acknowledgment, together with the long form disclosures required by § 37.6 of this part, to the customer within 3 business days after the telephone solicitation, and maintains sufficient documentation to show it made reasonable efforts to obtain the documents from the customer; and

(3) Permits the customer to cancel the purchase of the contract without penalty within 30 days after the bank has mailed the long form disclosures to the customer.

(c) *Special rule for solicitations using written mail inserts or ''take one'' applications.* If the contract is solicited through written materials such as mail inserts or ''take one'' applications and the bank provides only the short form disclosures in the written materials, then the bank shall mail the acknowledgment of receipt of disclosures, together with the long form disclosures required by § 37.6 of this part, to the customer within 3 business days, beginning on the first business day after the customer contacts the bank or otherwise responds to the solicitation. The bank may not obligate the customer to pay for the contract until after the bank has received the customer's written acknowledgment of receipt of disclosures unless the bank:

(1) Maintains sufficient documentation to show that the bank provided the acknowledgment of receipt of disclosures to the customer as required by this section;

(2) Maintains sufficient documentation to show that the bank made reasonable efforts to obtain from the customer a written acknowledgment of receipt of the long form disclosures; and

(3) Permits the customer to cancel the purchase of the contract without penalty within 30 days after the bank has mailed the long form disclosures to the customer.

(d) *Special rule for electronic election.* The affirmative election and acknowledgment may be made electronically in a manner consistent with the requirements of the Electronic

Signatures in Global and National Commerce Act, 15 U.S.C. 7001 *et seq.*

**§ 37.8 Safety and soundness requirements.**

A national bank must manage the risks associated with debt cancellation contracts and debt suspension agreements in accordance with safe and sound banking principles. Accordingly, a national bank must establish and maintain effective risk management and control processes over its debt cancellation contracts and debt suspension agreements. Such processes include appropriate recognition and financial reporting of income, expenses, assets and liabilities, and appropriate treatment of all expected and unexpected losses associated with the products. A bank also should assess the adequacy of its internal control and risk mitigation activities in view of the nature and scope of its debt cancellation contract and debt suspension agreement programs.

## Appendix A to Part 37—Short Form Disclosures

• This product is optional

Your purchase of [PRODUCT NAME] is optional. Whether or not you purchase [PRODUCT NAME] will not affect your application for credit or the terms of any existing credit agreement you have with the bank.

• Lump sum payment of fee

[Applicable if a bank offers the option to pay the fee in a single payment]
[Prohibited where the debt subject to the contract is a residential mortgage loan]

You may choose to pay the fee in a single lump sum or in [monthly/quarterly] payments. Adding the lump sum of the fee to the amount you borrow will increase the cost of [PRODUCT NAME].

• Lump sum payment of fee with no refund

[Applicable if a bank offers the option to pay the fee in a single payment for a no-refund DCC]
[Prohibited where the debt subject to the contract is a residential mortgage loan]

You may choose [PRODUCT NAME] with a refund provision or without a refund provision. Prices of refund and no-refund products are likely to differ.

• Refund of fee paid in lump sum

[Applicable where the customer pays the fee in a single payment and the fee is added to the amount borrowed]
[Prohibited where the debt subject to the contract is a residential mortgage loan]

[Either:] (1) You may cancel [PRODUCT NAME] at any time and receive a refund; or (2) You may cancel [PRODUCT NAME] within ____ days and receive a full refund; or (3) If you cancel [PRODUCT NAME] you will not receive a refund.

• Additional disclosures

We will give you additional information before you are required to pay for [PRODUCT NAME]. [If applicable]: This information will include a copy of the contract containing the terms of [PRODUCT NAME].

• Eligibility requirements, conditions, and exclusions

There are eligibility requirements, conditions, and exclusions that could prevent you from receiving benefits under [PRODUCT NAME].

[Either:] You should carefully read our additional information for a full explanation of the terms of [PRODUCT NAME] *or* You should carefully read the contract for a full explanation of the terms of [PRODUCT NAME].

## Appendix B to Part 37—Long Form Disclosures

• This product is optional

Your purchase of [PRODUCT NAME] is optional. Whether or not you purchase [PRODUCT NAME] will not affect your application for credit or the terms of any existing credit agreement you have with the bank.

• Explanation of debt suspension agreement

[Applicable if the contract has a debt suspension feature]

If [PRODUCT NAME] is activated, your duty to pay the loan principal and interest to the bank is only suspended. You must fully repay the loan after the period of suspension has expired. [If applicable]: This includes interest accumulated during the period of suspension.

• Amount of fee

[For closed-end credit]: The total fee for [PRODUCT NAME] is ____.

[For open-end credit, either:] (1) The monthly fee for [PRODUCT NAME] is based on your account balance each month multiplied by the unit-cost, which is _____; *or* (2) The formula used to compute the fee is _____].

• Lump sum payment of fee

[Applicable if a bank offers the option to pay the fee in a single payment]
[Prohibited where the debt subject to the contract is a residential mortgage loan]

You may choose to pay the fee in a single lump sum or in [monthly/quarterly] payments. Adding the lump sum of the fee to the amount you borrow will increase the cost of [PRODUCT NAME].

• Lump sum payment of fee with no refund

[Applicable if a bank offers the option to pay the fee in a single payment for a no-refund DCC]
[Prohibited where the debt subject to the contract is a residential mortgage loan]

You have the option to purchase [PRODUCT NAME] that includes a refund of the unearned portion of the fee if you terminate the contract or prepay the loan in full prior to the scheduled termination date. Prices of refund and no-refund products may differ.

• Refund of fee paid in lump sum

[Applicable where the customer pays the fee in a single payment and the fee is added to the amount borrowed]
[Prohibited where the debt subject to the contract is a residential mortgage loan]

[Either:] (1) You may cancel [PRODUCT NAME] at any time and receive a refund; or (2) You may cancel [PRODUCT NAME] within ____ days and receive a full refund; or (3) If you cancel [PRODUCT NAME] you will not receive a refund.

• Use of card or credit line restricted

[Applicable if the contract restricts use of card or credit line when customer activates protection]

If [PRODUCT NAME] is activated, you will be unable to incur additional charges on the credit card or use the credit line.

• Termination of [PRODUCT NAME]

[Either]: (1) You have no right to cancel [PRODUCT NAME]; *or* (2) You have the right to cancel [PRODUCT NAME] in the following circumstances: _____.

[And either]: (1) The bank has no right to cancel [PRODUCT NAME]; *or* (2)The bank has the right to cancel [PRODUCT NAME] in the following circumstances: _____.

• Eligibility requirements, conditions, and exclusions

There are eligibility requirements, conditions, and exclusions that could prevent you from receiving benefits under [PRODUCT NAME].

[Either]: (1) The following is a summary of the eligibility requirements, conditions, and exclusions. [The bank provides a summary of any eligibility requirements, conditions, and exclusions]; *or* (2) You may find a complete explanation of the eligibility requirements, conditions, and exclusions in paragraphs _____ of the [PRODUCT NAME] agreement.

Dated: August 16, 2002.

**John D. Hawke, Jr.,**

*Comptroller of the Currency.*

[FR Doc. 02–23765 Filed 9–18–02; 8:45 am]

BILLING CODE 4810–33–P

---

## FEDERAL HOUSING FINANCE BOARD

## 12 CFR Part 951

**[No. 2002–52]**

**RIN 3069–AB16**

## Affordable Housing Program Amendments

**AGENCY:** Federal Housing Finance Board.

**ACTION:** Final rule.

**SUMMARY:** The Federal Housing Finance Board (Finance Board) is amending its regulation governing the operation of the Affordable Housing Program (AHP) to authorize a Federal Home Loan Bank (Bank), after consultation with its Advisory Council, to set aside annually an additional amount, up to the greater of $1.5 million or 10 percent of the Bank's annual required AHP contribution, to assist low- or moderate-income, first-time homebuyers under the Bank's homeownership set-aside program. This increased discretionary

funding authority supplements the Banks' current discretionary authority to fund homeownership set-aside programs subject to the $3.0 million or 25 percent allocation cap. The Finance Board also is amending the regulation to increase the maximum subsidy limit per household to $15,000 for homeownership set-aside programs in general. Under the Banks' AHP contribution requirement for 2002, the increased funding authority will enable the twelve Banks to provide an additional $24.0 million to assist 1,600 to 4,800 additional low- or moderate-income, first-time homebuyers. This additional set-aside funding authority complements national housing policy initiatives to broaden first-time homeownership, especially among minority and immigrant households and households living in rural areas and on Native American tribal lands.

**EFFECTIVE DATE:** The final rule shall be effective on October 21, 2002.

**FOR FURTHER INFORMATION CONTACT:** Charles E. McLean, Associate Director, (202) 408–2537, Melissa L. Allen, Program Analyst, (202) 408–2524, Community Investment and Affordable Housing, Office of Supervision; Sylvia C. Martinez, Policy Analyst, (202) 408–2825, Strategic and System Research, Office of Supervision; Sharon B. Like, Senior Attorney-Advisor, (202) 408–2930, Office of General Counsel, Federal Housing Finance Board, 1777 F Street, NW, Washington, DC 20006.

**SUPPLEMENTARY INFORMATION:**

## I. Statutory and Regulatory Background

Section 10(j)(1) of the Federal Home Loan Bank Act (Bank Act) requires each Bank to establish a program to subsidize the interest rate on advances to members of the Bank System engaged in lending for long-term, low- and moderate-income, owner-occupied and affordable rental housing at subsidized interest rates. *See* 12 U.S.C. 1430(j)(1). The Finance Board is required to promulgate regulations governing the AHP. *See id.* The Finance Board's existing regulation governing the operation of the AHP is codified at 12 CFR part 951.

On June 20, 2002, the Finance Board published a proposed rule requesting comment on proposed amendments to the AHP regulation that would authorize a Bank, after consultation with its Advisory Council, to set aside annually an additional amount, up to the greater of $1.5 million or 10 percent of the Bank's annual required AHP contribution, to assist low- or moderate-income, first-time homebuyers (first-time homebuyer set-aside program), under the Bank's homeownership set-aside program. *See* 67 FR 41872 (June 20, 2002). The proposed rule provided for a 60-day comment period, which closed on August 19, 2002. The Finance Board received seven comment letters on the proposed rule. Commenters included: two Banks; one Bank member; three trade associations; and one nonprofit housing developer. Comments that raised issues beyond the scope of the proposed rule are not addressed in this final rule, but may be considered by the Finance Board in any future rulemaking under the AHP. The provisions of the proposed rule on which significant comments were received are discussed below.

## II. Goal to Broaden Homeownership

It is widely recognized that homeownership contributes to community stability and upward mobility of homeowners. A key goal of national housing policy is to broaden homeownership, especially among minority and immigrant households and households living in rural areas and on Native American tribal lands. Based on 2000 Census data, the homeownership rate is approximately 66.3 percent nationwide.[1] The homeownership rate for all minority groups is 48.6 percent, compared to 72.4 percent for non-minorities. The homeownership rate for immigrant households is 47 percent. According to data of the Department of Housing and Urban Development (HUD), in fiscal year 2001, 45.1 percent of Federal Housing Administration (FHA) loans to first-time homebuyers with incomes at or below 80 percent of area median income were to members of minority groups.

To achieve this goal of broadening homeownership, a number of initiatives for assistance to first-time homebuyers have been proposed or implemented, including: the Self-Help Homeownership Opportunity Program (SHOP); the Section 8 Homeownership Program vouchers; the HOME American Dream Downpayment Fund; and a new FHA hybrid adjustable-rate mortgage for low- or moderate-income homebuyers. HUD and state and local housing authorities also are seeking to assist households in achieving homeownership through Family Self-Sufficiency (FSS) and Individual Development Account (IDA) savings programs. Two of the Banks currently use part or all of their homeownership set-aside funding authority to supplement the savings of households participating in FSS and IDA programs.

The Finance Board believes that, in addition to the Banks' current authority to set aside AHP funds for homeownership assistance, authorizing a Bank to set aside annually up to the greater of $1.5 million or 10 percent of its annual required AHP contribution to assist low- or moderate-income, first-time homebuyers would complement these initiatives to broaden homeownership, especially among minority and immigrant households and households living in rural areas and on tribal lands. An increase in AHP subsidy of 10 percentage points for all twelve Banks would increase the total amount of potential funds available from the twelve Banks for downpayment and closing cost assistance to low- or moderate-income, first-time homebuyers by $24.0 million in 2002.[2] With an increase in the maximum subsidy limit per household to $15,000, this could assist 1,600 to 4,800 additional low- or moderate-income, first-time homebuyers. According to a recent study in the 2001 Annual Report of the Federal Reserve Bank of Minneapolis, cash assistance has a greater effect than other options on the ability of renters to afford to purchase a home. According to the report, a $5,000 cash grant for downpayment assistance increases the number of minority renters who can afford to purchase a home by as much as 13 percent, while a $10,000 cash grant has nearly twice the effect.

The changes to the AHP regulation are discussed further below under the **Analysis of Final Rule** section.

## III. Analysis of Final Rule

### *A. Current AHP Homeownership Set-Aside Program Authority*

The current AHP regulation requires each of the twelve Banks to operate a competitive application program in its district for the awarding of AHP grants or subsidized advances to members to assist in the purchase, construction or rehabilitation of housing for very low- and low- or moderate-income households. *See* 12 CFR 951.3(a)(2), 951.5(b), 951.6(b). In addition, the AHP regulation authorizes each Bank, in its discretion, after consultation with its Advisory Council, to adopt homeownership set-aside programs for the disbursement of AHP grants to members to assist low- or moderate-income households with the purchase or rehabilitation of owner-occupied

[1] According to the United States Department of Commerce, U.S Census Bureau Housing Vacancies and Homeownership Survey, the fourth quarter 2001 national homeownership rate was approximately 67.8 percent.

[2] The total required AHP contribution of the twelve Banks in 2002 is $240 million. *See* 12 U.S.C. 1430(j)(5)(C).

housing units. *See* 12 CFR 951.3(a), 951.5(a), 951.6(a). ''Low- or moderate-income households'' are defined generally as households with incomes of 80 percent or less of the median income for the area. *See* 12 CFR 951.1. Specifically, each Bank, after consultation with its Advisory Council, may set aside annually, in the aggregate, up to the greater of $3.0 million or 25 percent of its annual required AHP contribution to provide funds to members participating in homeownership set-aside programs at the Bank. 12 CFR 951.3(a)(1). In addition, in cases where the amount of homeownership set-aside funds applied for by members in a given year exceeds the amount available for that year, a Bank may allocate up to the greater of $3.0 million or 25 percent of its annual required AHP contribution for the subsequent year to the current year's homeownership set-aside programs. 12 CFR 951.3(a)(1).

The AHP regulation provides that households must use the homeownership set-aside grants to pay for downpayment, closing cost, counseling, or rehabilitation assistance in connection with the household's purchase or rehabilitation of an owner-occupied housing unit. *See* 12 CFR 951.5(a)(4). The AHP regulation also provides that households must complete a homebuyer or homeowner counseling program, and must meet such other allocation and eligibility criteria as may be established by the Bank, such as a matching funds requirement or criteria that give priority for the purchase or rehabilitation of housing in particular areas or as part of a disaster relief effort. *See* 12 CFR 951.5(a)(1), (2)(ii) and (iii). The Banks have used this authority over the years to adopt a variety of different eligibility requirements and priorities under their homeownership set-aside programs. In addition, a housing unit purchased or rehabilitated using homeownership set-aside funds must be subject to a five-year retention agreement requiring that if the unit is sold to an income-ineligible household or refinanced prior to the end of the five-year retention period and is no longer subject to a deed restriction, a *pro rata* share of the subsidy shall be repaid to the Bank. *See* 12 CFR 951.5(a)(5), 951.13(d)(1).

*B. Amendments to the Regulation*

For the reasons discussed above, the Finance Board believes that increasing the Banks' current maximum allowable annual homeownership set-aside amount, with the incremental increase targeted to low- or moderate-income, first-time homebuyers, would assist the national housing policy goal of broadening homeownership, including homeownership among minority and immigrant groups and households living in rural areas and on tribal lands. Commenters on the proposed rule generally supported this increased discretionary funding authority. A trade association commenter recommended that the proposed incremental set-aside increase of 10 percent of a Bank's annual required AHP contribution should be used only for eligible households buying newly constructed or substantially rehabilitated housing. The commenter stated that new construction technologies result in lower maintenance and energy costs than those associated with older homes. Although the Finance Board agrees that there can be potential benefits of new technologies in terms of long-term operating costs, the Finance Board's objective is to make the purchase of the unit more affordable, whether the housing is new or not. Moreover, the Finance Board does not believe that the AHP should contain requirements that restrict a household's ability to choose its housing under the homeownership set-aside program.

Accordingly, consistent with the proposed rule, § 951.3(a)(1)(ii) of the final rule authorizes a Bank, after consultation with its Advisory Council, to set aside annually an additional amount, up to the greater of $1.5 million or 10 percent of its annual required AHP contribution, to assist low- or moderate-income, first-time homebuyers. Section 951.3(a)(1)(ii) also authorizes a Bank, in cases where the amount of funds applied for by members in a given year under the first-time homebuyer set-aside program exceeds the amount available for that year, to set aside an additional amount, up to the greater of $1.5 million or 10 percent of its annual required AHP contribution for the subsequent year, to the current year's first-time homebuyer set-aside program. The increased discretionary funding authority will supplement the Banks' current discretionary authority to fund homeownership set-aside programs subject to the existing $3.0 million or 25 percent allocation cap. Consistent with the proposed rule, the final rule also makes a technical amendment to require that the Consumer Price Index (CPI) adjustments of the maximum dollar limits be made beginning in 2003 instead of 2002.

Under the existing AHP regulation, prior to disbursement of homeownership set-aside funds by a Bank to a member, the Bank must require the member to certify that, among other things, the funds received from the Bank will be provided to a household meeting the eligibility requirements of § 951.5(a)(2). *See* 12 CFR 951.8(b)(2). Consistent with the proposed rule, the final rule amends § 951.5(a)(2)(iii) to include the first-time homebuyer requirement as an eligibility requirement under the first-time homebuyer set-aside program. Therefore, a member is required to certify that funds to be disbursed to households under the first-time homebuyer set-aside program will be provided to eligible first-time homebuyers. Consistent with the current AHP regulation, the final rule does not define the term ''first-time homebuyer,'' leaving such determination to the discretion of each Bank, as set forth in its AHP Implementation Plan.

The increased funding authority entails use of the Banks' existing set-aside program operations, thereby minimizing additional administrative costs on the Banks, and does not affect the Banks' and Advisory Councils' current discretionary authority regarding funding and operation of existing or new set-aside programs under the $3.0 million or 25 percent allocation cap. Thus, the Banks, in consultation with their Advisory Councils, may continue their existing set-aside programs, and have the flexibility to adopt new set-aside programs based on local needs, subject to the current $3.0 million or 25 percent allocation cap. A determination on whether to use the increased funding authority is in the discretion of each Bank, after consultation with its Advisory Council. However, if a decision is made to use the increased funding authority, such increased funding must be targeted to low- or moderate-income, first-time homebuyers, subject to any additional eligibility criteria adopted by the Bank, in its discretion, for the program. *See* 12 CFR 951.5(a)(2)(iii). A Bank could, of course, choose, in its discretion, to also target some or all of its existing or new set-aside programs operating under the current $3.0 million or 25 percent allocation cap to low- or moderate-income, first-time homebuyers, as some Banks do now.

The Banks' homeownership set-aside programs have proven to be an efficient and effective means for the Banks and their members to provide homeownership opportunities for low- or moderate-income homebuyers, including first-time homebuyers. Homeownership set-aside funds help finance affordable housing in underserved areas and for underserved households, and often are the only way

to effectively meet scattered-site, affordable housing needs in rural areas or tribal areas, which have difficulty scoring well under the competitive AHP application program and where rental projects are not feasible. Homeownership set-aside programs also allow a member to use AHP funds to finance housing for individual eligible households on an as-needed basis, even if it is only for one household in the member's market area. These are households that the competitive AHP application program might not otherwise reach.

In addition, homeownership set-aside funds often are the only way to meet the need for homeownership opportunities for low-income and very low-income households, which require larger per-unit subsidies and, therefore, may not score well under the competitive AHP application program. Set-aside funds could be made available, in conjunction with funds offered by other homeownership programs, to assist households purchasing homes under such programs. Many households that meet the eligibility requirements of HUD and FSS and IDA homeownership programs may still have difficulty meeting the financial demands of homeownership. Providing additional set-aside funds as downpayment assistance could help lower housing costs to a level that will improve the chances of successful homeownership for such households.

The current AHP regulation requires members to provide homeownership set-aside funds as a grant, in an amount up to a maximum of $10,000 per household, as established by the Bank, with such limit applying to all households. *See* 12 CFR 951.5(a)(3). In the **SUPPLEMENTARY INFORMATION** section of the proposed rule, the Finance Board raised the question whether this $10,000 limit per household may impede the ability of Banks and members to assist eligible households that have lower incomes or live in high cost areas and that may require larger per-unit subsidies in the purchase or rehabilitation of homes. The Finance Board requested comment on whether the regulation should be amended to increase the maximum subsidy limit per household and the amount of such limit, or whether the Banks should be provided the authority to determine, in their discretion, whether to adopt a maximum subsidy limit per household and the amount of any such limit.

Two trade association commenters supported providing the Banks the discretionary authority to adopt maximum subsidy limits per household and the amount of such limits, with one commenter noting that housing and rehabilitation costs can vary significantly by geographic area and the needs of homebuyers can differ significantly within the low- or moderate-income targeting range. While most of the Banks have adopted subsidy per-household limits below the maximum authorized by the current regulation, several Banks have suggested that the current maximum subsidy limit per household prevents the homeownership set-aside program from being an effective tool in helping to make homeownership affordable for the working poor and for households in areas where housing costs are exceptionally high. The Finance Board recognizes that there is a need for additional flexibility in the maximum subsidy limit. Accordingly, the Finance Board is amending § 951.5(a)(3) of the regulation to increase the maximum grant that a Bank is authorized to make under its homeownership set-aside programs in general, from $10,000 per household to $15,000 per household.

The member commenter also recommended that the Banks be permitted to pay fees, such as $500 per loan closing, to nonprofit organizations for the administration of the program. Use of homeownership set-aside funds by nonprofit organizations for administrative fees would not be an eligible use of AHP subsidies under the Bank Act and AHP regulation. *See* 12 U.S.C. 1430(j)(2), 12 CFR 951.5(a)(4). Therefore, this suggestion has not been adopted in the final rule.

## IV. Paperwork Reduction Act

The final rule does not contain any collections of information pursuant to the Paperwork Reduction Act of 1995. *See* 44 U.S.C. 3501 *et seq.* Therefore, the Finance Board has not submitted any information to the Office of Management and Budget for review.

## V. Regulatory Flexibility Act

The final rule applies only to the Banks, which do not come within the meaning of ''small entities,'' as defined in the Regulatory Flexibility Act (RFA). *See* 5 U.S.C. 601(6). Thus, in accordance with section 605(b) of the RFA, 5 U.S.C. 605(b), the Finance Board hereby certifies that the final rule will not have a significant economic impact on a substantial number of small entities.

## List of Subjects in 12 CFR Part 951

Community development, Credit, Federal home loan banks, Housing, Reporting and recordkeeping requirements.

Accordingly, the Finance Board hereby amends part 951, title 12, chapter IX, Code of Federal Regulations, as follows:

## PART 951—AFFORDABLE HOUSING PROGRAM

1. The authority citation for part 951 continues to read as follows:

**Authority:** 12 U.S.C. 1430(j).

2. Revise § 951.3(a)(1) to read as follows:

### § 951.3 Operation of Program and adoption of AHP implementation plan.

(a) *Allocation of AHP contributions*—(1) *Homeownership set-aside programs.* (i) *Homeownership set-aside programs subject to $3.0 million or 25 percent cap.* Each Bank, after consultation with its Advisory Council, and pursuant to written policies adopted by the Bank's board of directors, may set aside annually, in the aggregate, up to the greater of $3.0 million or 25 percent of its annual required AHP contribution to provide funds to members participating in the Bank's homeownership set-aside programs, pursuant to the requirements of this part. In cases where the amount of homeownership set-aside funds applied for by members in a given year exceeds the amount available for that year, a Bank may allocate up to the greater of $3.0 million or 25 percent of its annual required AHP contribution for the subsequent year to the current year's homeownership set-aside programs pursuant to written policies adopted by the Bank's board of directors. A Bank may establish one or more homeownership set-aside programs pursuant to written policies adopted by the Bank's board of directors.

(ii) *Additional first-time homebuyer set-aside program subject to $1.5 million or 10 percent cap.* In addition to the authority provided under paragraph (a)(1)(i) of this section, each Bank, after consultation with its Advisory Council, and pursuant to written policies adopted by the Bank's board of directors, may set aside annually up to the greater of $1.5 million or 10 percent of its annual required AHP contribution to provide funds to members participating in a Bank homeownership set-aside program to assist first-time homebuyers, pursuant to the requirements of this part. In cases where the amount of homeownership set-aside funds applied for by members in a given year under such a program exceeds the amount available for that year, a Bank may allocate up to the greater of $1.5 million or 10 percent of its annual required AHP contribution for the subsequent year to the current year's program pursuant to written policies

adopted by the Bank's board of directors.

(iii) *Requirements applicable to all homeownership set-aside programs.* Beginning in 2003 and for subsequent years, the maximum dollar limits set forth in paragraphs (a)(1)(i) and (a)(1)(ii) of this section shall be adjusted annually by the Finance Board to reflect any percentage increase in the preceding year's Consumer Price Index (CPI) for all urban consumers, as published by the Department of Labor. Each year, as soon as practicable after the publication of the previous year's CPI, the Finance Board shall publish notice by **Federal Register**, distribution of a memorandum, or otherwise, of the CPI-adjusted limits on the maximum set-aside dollar amount. A Bank's board of directors shall not delegate to Bank officers or other Bank employees the responsibility for adopting its homeownership set-aside program policies.

* * * * *

3. Amend § 951.5 by:

a. Revising paragraph (a)(2)(iii); and

b. In paragraph (a)(3), removing the term ''$10,000'' and adding, in its place, the term ''$15,000'', to read as follows:

**§ 951.5 Minimum eligibility standards for AHP projects.**

(a) * * *

(2) * * *

(iii) Meet the first-time homebuyer requirement, in the case of households receiving funds pursuant to a first-time homebuyer set-aside program established pursuant to § 951.3(a)(1)(ii), and meet such other eligibility criteria that may be established by the Bank, such as a matching funds requirement or criteria that give priority for the purchase or rehabilitation of housing in particular areas or as part of a disaster relief effort, in the case of households receiving funds pursuant to homeownership set-aside programs established pursuant to § 951.3(a)(1)(i) or (ii);

* * * * *

Dated: September 12, 2002.

By the Board of Directors of the Federal Housing Finance Board.

**John T. Korsmo,**

*Chairman.*

[FR Doc. 02–23823 Filed 9–18–02; 8:45 am]

**BILLING CODE 6725–01–P**

## DEPARTMENT OF TRANSPORTATION

## Federal Aviation Administration

## 14 CFR Part 71

**[Airspace Docket No. 02–AGL–12]**

## Modification of Class E Airspace; Zanesville, OH

**AGENCY:** Federal Aviation Administration (FAA), DOT.

**ACTION:** Final rule.

**SUMMARY:** This action modifies Class E airspace at Zanesville, OH. A Global Positioning System (GPS) Standard Instrument Approach Procedure (SIAP) 160° helicopter point in space approach, has been developed for Bethesda Hospital, Zanesville, OH. Controlled airspace extending upward from 700 feet or more above the surface of the earth is needed to contain aircraft executing this approach. This action increased the radius of the existing controlled airspace for Zanesville Municipal Airport.

**EFFECTIVE DATE:** 0901 UTC, November 28, 2002.

**FOR FURTHER INFORMATION CONTACT:** Denis C. Burke, Air Traffic Division, Airspace Branch, AGL–520, Federal Aviation Administration, 2300 East Devon Avenue, Des Plaines, Illinois 60018, telephone (847) 294–7568.

**SUPPLEMENTARY INFORMATION:**

### History

On Thursday, June 13, 2002, the FAA proposed to amend 14 CFR part 71 to modify Class E airspace at Zanesville, OH (67 FR 40627). The proposal was to modify existing Class E airspace at Zanesville Municipal Airport, OH, in order to protect for a point in space approach used by helicopters involved in medical emergencies. Interested parties were invited to participate in this rulemaking proceeding by submitting written comments on the proposal to the FAA. No comments were received, however the NPRM contained responses to earlier concerns raised in a Direct Final Rule. A total of Eight (8) comments were received in response to that rule and were considered adverse, thereby requiring the rule to be withdrawn. The objections centered around issues at Parr Airport and contained the following concerns:

1. Safety concern over IFR helicopter operations. One (1) respondent stated he was concerned about inserting occasional helicopters into a busy G.A. environment.

2. Increased restrictions on the ability to fly during periods of low visibility. Four (4) respondents stated they would have less opportunity to fly or train during marginal weather conditions because of the higher visibility requirements associated with Class E airspace.

3. Impact to local flight school. Three (3) respondents stated business would be lost because of the inability to conduct VFR training during periods of low visibility. All of these comments were considered and evaluated. They were responded to as follows:

1. Class E airspace is designed to protect aircraft executing instrument approach procedures. The higher visibility requirements for VFR flight in Class E airspace allows for a safer operating environment for IFR aircraft.

2. While not as many aircraft may operate at the same time when visibility is restricted, a special VFR clearance may be obtained, thus allowing for continued flight or training during these periods. Additionally, creating a Class E airspace corridor, or an exclusion for Parr Airport, which was suggested, would not fit design criteria, or provide adequate protection for the approach.

3. Other than having to conduct training under higher visibility requirements (unless a special VFR clearance is requested), the economic impact to the flight school is undefined and beyond the scope of this airspace action.

Class E airspace areas extending upward from 700 feet or more above the surface of the earth are published in paragraph 6005 of FAA Order 7400.9J dated August 31, 2001, and effective September 16, 2001, which is incorporated by reference in 14 CFR 71.1. The Class E designations listed in this document would be published subsequently in the Order.

### The Rule

This amendment to 14 CFR part 71 modifies Class E airspace at Zanesville, OH, for Zanesville Municipal Airport. Controlled airspace extending upward from 700 feet or more above the surface of the earth is needed to contain aircraft executing instrument approach procedures. The area will be depicted on appropriate aeronautical charts.

The FAA has determined that this regulation only involves an establishment body of technical regulation for which frequent and routine amendments are necessary to keep them operationally current. Therefore this regulation—(1) is not a ''significant regulatory action'' under Executive Order 12866; (2) is not a ''significant rule'' under DOT Regulatory Policies and Procedures (44 FR 11034; February 26, 1979); and (3)

does not warrant preparation of a Regulatory Evaluation as the anticipated impact is so minimal. Since this is a routine matter that will only affect air traffic procedures and air navigation, it is certified that this rule will not have a significant economic impact on a substantial number of small entities under the criteria of the Regulatory Flexibility Act.

**List of Subjects in 14 CFR Part 71**

Airspace, Incorporated by reference, Navigation (air).

**Adoption of the Amendment**

Accordingly, pursuant to the authority delegated to me, the Federal Aviation Administration amends 14 CFR part 71 as follows:

## PART 71—DESIGNATION OF CLASS A, CLASS B, CLASS C, CLASS D, AND CLASS E AIRSPACE AREAS; AIRWAYS; ROUTES, AND REPORTING POINTS

1. The authority citation for part 71 continues to read as follows:

**Authority:** 49 U.S.C. 106(g), 40103, 40113, 40120; E.O. 10854, 24 FR 9565, 3 CFR, 1959–1963 Comp., p. 389.

**§ 71.1 [Amended]**

2. The incorporation by reference in 14 CFR 71.1 of the Federal Aviation Administration Order 7400.9J, Airspace Designations and Reporting Points, dated August 31, 2001, and effective September 16, 2001, is amended as follows:

* * * * *

*Paragraph 6005 Class E airspace areas extending upward from 700 feet or more above the surface of the earth.*

* * * * *

**AGL OH E5 Zanesville, OH [Revised]**

Zanesville Municipal Airport, OH (Lat. 39° 56′ 40″N., long. 81° 53′ 32″W.)

Zanesville VOR/DME (Lat. 39° 56′ 27″N., long. 81° 53′ 33″W.)

Zanesville, Bethesda Hospital, OH

Point in Space Coordinates (Lat. 39° 59′ 5″N., long. 82° 1′ 30″W.)

That airspace extending upward from 700 feet above the surface within a 6.5-mile radius of the Zanesville Municipal Airport and within 7 miles east and 4.4 miles west of the Zanesville VOR/DME 220° radial extending from the VOR/DME to 10.5 miles southwest of the VOR/DME, and within 2.4 miles either side of the Zanesville VOR/DME 028° radial extending from the 6.5-mile radius to 7 miles northeast of the VOR/DME, and within a 6-mile radius of the Point in Space serving the Bethesda Hospital.

* * * * *

Issued in Des Plaines, Illinois on September 4, 2002.

**Nancy B. Shelton,**

*Manager, Air Traffic Division, Great Lakes Region.*

[FR Doc. 02–23832 Filed 9–18–02; 8:45 am]

BILLING CODE 4910–13–M

---

## DEPARTMENT OF TRANSPORTATION

## Federal Aviation Administration

## 14 CFR Part 71

**[Airspace Docket No. 02–AGL–04]**

## Modification of Class E Airspace; Lapeer, MI

**AGENCY:** Federal Aviation Administration (FAA), DOT.

**ACTION:** Final rule.

**SUMMARY:** This action modifies Class E airspace at Lapeer, MI. A VOR–A, Standard Instrument Approach Procedure (SIAP), has been developed for Dupont-Lapeer Airport. Controlled airspace extending upward from 700 feet above the surface of the earth is needed to contain aircraft executing this approach. This action increases the area of the existing controlled airspace for Dupont-Lapeer Airport.

**EFFECTIVE DATE:** 0901 UTC, November 28, 2002.

**FOR FURTHER INFORMATION CONTACT:** Denis C. Burke, Air Traffic Division, Airspace Branch, AGL–520, Federal Aviation Administration, 2300 East Devon Avenue, Des Plaines, Illinois 60018, telephone (847) 294–7568.

**SUPPLEMENTARY INFORMATION:**

**History**

On Tuesday, May 28, 2002, the FAA proposed to amend 14 CFR part 71 to modify Class E airspace at Lapeer, MI (67 FR 36848). The proposal was to modify controlled airspace extending upward from 700 feet above the surface of the earth to contain Instrument Flight Rules (IFR) operations in controlled airspace during portions of the terminal operation and while transiting between the enroute and terminal environments.

Interested parties were invited to participate in this rulemaking proceeding by submitting written comments on the proposal to the FAA. No comments objecting to the proposal were received. Class E airspace areas extending upward from 700 feet or more above the surface of the earth are published in paragraph 6005, of FAA Order 7400.9J dated August 31, 2001, and effective September 16, 2001, which is incorporated by reference in 14 CFR 71.1. The Class E airspace designations listed in this document will be published subsequently in the order.

**The Rule**

This amendment to 14 CFR part 71 modifies Class E airspace at Lapeer, MI, to accommodate aircraft executing instrument flight procedures into and out of Dupont-Lapeer Airport. The area will be depicted on appropriate aeronautical charts.

The FAA has determined that this regulations only involves an established body of technical regulation for which frequent and routine amendments are necessary to keep them operationally current. Therefore this, proposed regulation—(1) is not a ''significant regulatory action'' under Executive Order 12866; (2) is not a ''significant rule'' under DOT Regulatory Policies and Procedures (44 FR 11034; February 26, 1979); and (3) does not warrant preparation of a Regulatory Evaluation as the anticipated impact is so minimal. Since this is a routine matter that will only affect air traffic procedures and air navigation, it is certified that this rule will not have a significant economic impact on a substantial number of small entities under the criteria of the Regulatory Flexibility Act.

**List of Subjects in 14 CFR Part 71**

Airspace, Incorporation by reference, Navigation (air).

**Adoption of the Amendment**

In consideration of the foregoing, the Federal Aviation Administration amends 14 CFR part 71 as follows:

## PART 71—DESIGNATION OF CLASS A, CLASS B, CLASS C, CLASS D, AND CLASS E AIRSPACE AREAS; AIRWAYS; ROUTES; AND REPORTING POINTS

1. The authority citation for part 71 continues to read as follows:

**Authority:** 49 U.S.C. 106(g), 40103, 40113, 40120; E.O. 10854, 24 FR 9565, 3 CFR, 1959–1963 Comp., p. 389.

**§ 71.1 [Amended]**

2. The incorporation by reference in 14 CFR 71.1 of the Federal Aviation Administration Order 7400.9J, Airspace Designations and Reporting Points, dated August 31, 2001, and effective September 16, 2001, is amended as follows:

* * * * *

Paragraph 6005 Class E airspace areas extending upward from 700 feet or more above the surface of the earth.

* * * * *

AGL MI E5 Lapeer, MI [Revised]

Dupont-Lapeer Airport, MI (Lat. 43° 04′ 00″N., long. 83° 16′ 20″W.)

That airspace extending upward from 700 feet above the surface within a 6.5-mile radius of the Dupont-Lapeer Airport.

* * * * *

* * * * *

Issued in Des Plaines, Illinois on September 4, 2000.

**Nancy B. Shelton,**

*Manager, Air Traffic Division, Great Lakes Region.*

[FR Doc. 02–23833 Filed 9–19–02; 8:45 am]

BILLING CODE 4910–13–M

## DEPARTMENT OF TRANSPORTATION

## Federal Aviation Administration

## 14 CFR Part 71

**[Airspace Docket No. 01–AGL–17]**

## Modification of Class E Airspace; Athens, OH

**AGENCY:** Federal Aviation Administration (FAA), DOT.

**ACTION:** Direct final rule; confirmation of effective date.

**SUMMARY:** This document confirms the effective date of a direct final rule which modifies Class E airspace, Athens, OH.

**EFFECTIVE DATE:** The direct final rule published at 67 FR 36807 is effective 9091 UTC, October 3, 2002.

**FOR FURTHER INFORMATION CONTACT:** Denis C. Burke, Airspace Branch, AGL–520, Air Traffic Division, Federal Aviation Administration, 2300 East Devon Avenue, Des Plaines, Illinois 60018, telephone (847–294–7568).

**SUPPLEMENTARY INFORMATION:** The FAA published this direct final rule with a request for comments in the **Federal Register** on Tuesday, May 28, 2002, (67 FR 36807). The FAA uses the direct final rulemaking procedure for a noncontroversial rule where the FAA believes that there will be no adverse public comment. This direct final rule advised the public that no adverse comments were anticipated, and that unless a written adverse comment, or a written notice of intent to submit such an adverse comment, were received within the comment period, the regulation would become effective on October 3, 2002. No adverse comments were received, and, thus, this action confirms that this direct final rule will be effective on that date.

* * * * *

Issued in Des Plaines, Illinois, on September 4, 2002.

**Nancy B. Shelton,**

*Manager, Air Traffic Division, Great Lakes Region.*

[FR Doc. 02–23834 Filed 9–18–02; 8:45 am]

BILLING CODE 4910–13–M

## DEPARTMENT OF TRANSPORTATION

## 14 CFR Part 71

**[Airspace Docket No. 02–AGL–02]**

## Modification of Class E airspace; Tecumseh, MI; Correction

**AGENCY:** Federal Aviation Administration (FAA), DOT.

**ACTION:** Final rule; correction.

**SUMMARY:** This action corrects an error contained in a final rule that was published in the **Federal Register** on Wednesday, July 10, 2002 (67 FR 45632). The final rule modified Class E airspace at Tecumseh, MI.

**EFFECTIVE DATE:** 0901 UTC, October 3, 2002.

**FOR FURTHER INFORMATION CONTACT:** Denis C. Burke, Air Traffic Division, Airspace Branch, AGL–520, Federal Aviation Administration, 2300 East Devon Avenue, Des Plaines, IL 60018, telephone: (847) 294–777.

**SUPPLEMENTARY INFORMATION:**

### History

Federal Register Document 02–17369 published on Wednesday, July 10, 2002 (67 FR 45632), modified Class E Airspace at Tecumseh, MI. The Docket contained an incorrect latitude and longitude for Tecumseh Products Airport, MI. This action corrects that error, by replacing the incorrect latitude and longitude with the correct latitude and longitude.

Accordingly, pursuant to the authority delegated to me, the error for the Class E Airspace, Tecumseh, MI, as published in the **Federal Register** Wednesday, July 10, 2002 (67 FR 45632), (FR Doc. 02–17369), is corrected as follows:

**§ 71.1 [Corrected]**

1. On page 45632, Column 3, in the legal description under Tecumseh, Tecumseh Products Airport, MI, correct ''(Lat. 42°01′06″ N., long. 83°52′42″ W.)'' to read ''(Lat. 42°01′58″ N., long. 83°52′42″ W.)''.

* * * * *

Issued in Des Plaines, Illinois on August 22, 2002.

**Nancy B. Shelton,**

*Manager, Air Traffic Division, Great Lakes Region.*

[FR Doc. 02–23831 Filed 9–18–02; 8:45 am]

BILLING CODE 4910–13–M

## DEPARTMENT OF STATE

## 22 CFR Parts 121 and 123

**[Public Notice 4124]**

## Amendment to the International Traffic in Arms Regulations: United States Munitions List

**AGENCY:** Department of State.

**ACTION:** Final rule.

**SUMMARY:** The Department of State is revising the U.S. Munitions List (USML), Category II—Artillery Projectors, Category III—Ammunition, Category VII—Tanks and Military Vehicles, and Category XVI—Nuclear Weapons Design and Test Equipment. Also, in order to provide complete coverage of an emerging technology, Category XVIII, currently ''Reserved'', is revised to control directed energy weapons. Categories II, III, and XVI are revised to amend the titles to provide more comprehensive coverage of items controlled in the categories. Category II is further amended for clarity, to move self-propelled guns and howitzers and their engines from Category VII (c) and (g), respectively, and to specifically identify kinetic energy weapons systems, and specifically designed production, tooling, test and evaluation equipment. Category II, is further amended to enhance the control on signature control materials currently found only in Category XIII(j). Category VII is amended to delete paragraph (c) and to amend paragraph (g) to delete the engines for self-propelled guns and howitzers and to renumber the paragraphs. The interpretations and amplifications of categories currently found elsewhere in the International Traffic in Arms Regulations (ITAR) relative to categories III and VII, respectively, are also being included in the revised text of the relevant category. Category XVI is revised to include a new paragraph identifying specifically designed or modified components, parts, accessories, attachments and associated equipment for the articles in the category. In addition, the regulations are amended to more properly identify the alternative control and transfer authorities on nuclear materials under other statutes implemented by other agencies. Finally, in implementation of

the Presidential Determination No. 2002–10 of March 14, 2002, Bahrain is added as a major non-NATO ally of the United States.

**EFFECTIVE DATE:** September 19, 2002.

**FOR FURTHER INFORMATION CONTACT:** Mr. Stephen Tomchik, Office of Defense Trade Controls, Department of State, Telephone (202) 663–2799 or FAX (202) 261–8199. ATTN: Regulatory Change, USML Part 121, Category V and XIV.

**SUPPLEMENTARY INFORMATION:** This notice of rule making sets out the results of a review of the U.S. Munitions List (USML), Category II and III, by the Department of State in consultation with the Departments of Defense and Commerce, and of Category XVI by the Department of State in consultation with the Departments of Defense, Commerce, and Energy. In Categories II, III, and XVIII the titles are revised to more accurately reflect the full range of articles covered by each category (*e.g.* the movement of self-propelled guns and howitzers and their engines from Category VII paragraph (c) and paragraph (g) respectively to Category II).

In amending Category II, the items currently in paragraph (c) are transferred to a new paragraph (j). Paragraph (c) now controls apparatus and devices for launching or delivering ordnance, other than those items controlled in Category IV of the USML. The items in (d) are transferred to a new paragraph (k) permitting an emerging class of new energy weapons determined to be inadequately defined on the USML to now be specifically identified. Paragraph (d) now controls kinetic energy weapon systems specifically designed or modified for destruction or rendering mission-abort of a target. During the review, it was also determined that the coverage of signature control materials currently found in Category XIII(j) was inadequate. While signature control features may be integral to a given system design, they can also be sold as add-on subassemblies or materials for application to existing systems. Therefore a new paragraph (e) now controls signature control materials for the articles in Category II. Category II (a) was expanded to control all guns over caliber .50 whether towed, airborne, self-propelled or fixed resulting in the transfer of self-propelled guns and howitzers from Category VII (c) to this category. Category II is further revised to add a new paragraph (f) to control the engines for self-propelled guns and howitzers moved from Category VII (g). Also added are, a new paragraph (g) to identify production tooling and equipment specifically designed or modified for the production of the articles controlled by this category, a new paragraph (h) to control specifically designed or modified test and evaluation equipment and test models, and a new paragraph (i) to control autoloading systems for electronic programming of projectile function.

In addition to revising the title of Category III, the category is further revised to move components, parts, accessories and attachments from paragraph (b) to paragraph (d). This is done for the sake of greater internal logic and consistency. Paragraph (d), in addition to controlling components, parts, accessories, attachments and associated equipment for the articles in the category, is also revised to specifically identify certain ammunition/ordnance components, parts, accessories and attachments and to designate them as Significant Military Equipment (SME). The ammunition belting and linking machines in paragraph (c) are moved to paragraph (b) followed by the logically related corresponding move of ammunition manufacturing and loading machines from paragraph (d) to paragraph (c). The interpretation and amplification language in § 121.6 is transferred to a new paragraph (f) and section 121.6 will be captioned ''Reserved''.

Category XVI, is revised to transfer the items currently in Category XIV(d) of the USML to paragraph (c) and to add a new paragraph (d) to ensure coverage of specifically designed components, parts, accessories, attachments and associated equipment for the articles in the category. The technical data and services in paragraph (c) are moved to a new paragraph (e). Also, section 123.20 of the regulations is revised to more properly identify the alternative control and transfer authorities on nuclear materials, nuclear parts of nuclear weapons, or other non-nuclear parts of nuclear weapons systems implemented by other agencies.

Category XVIII currently ''Reserved'', is revised to create a new category to the USML to ensure control of directed energy weapons. While Categories XII (b) and XIII (h) currently control aspects of directed energy weapons, this new category will provide a more complete coverage of the emerging technologies (*e.g.*, items used to burn out radar receivers, disable electro-optic sensors or intercept missiles). Revisions to Categories XII (b) and XIII (h), as appropriate, will take place during review of each of these categories.

Finally, Category VII, Tanks and Military Vehicles, is revised to delete paragraph (c), to remove the engines for self propelled guns and howitzers from paragraph (g) and to renumber the remaining paragraphs. Consistent with the change in previous categories, to include interpretative notes where appropriate in the category itself, the text of § 121.4 is moved to the category, in paragraph (i), and section 121.4 will be captioned ''Reserved''.

This amendment involves a foreign affairs function of the United States and, therefore, is not subject to the procedures required by 5 U.S.C. 553 and 554. It is exempt from review under Executive Order 12866; but has been reviewed internally by the Department of State to ensure consistency with the purposes thereof. This rule does not require analysis under the Regulatory Flexibility Act or the Unfunded Mandates Reform Act. It has been found not to be a major rule within the meaning of the Small Business Regulatory Enforcement Act of 1966. It will not have substantial direct effects on the States, the relationship between the National Government and the States, or on the distribution of power and responsibilities among the various levels of government. Therefore, in accordance with section 6 of Executive Order 13132, it is determined that this rule does not have sufficient federalism implications to warrant application of Executive Orders Nos. 12372 and 13123. However, affected U.S. persons are invited to submit written comments to the Department of State, Office of Defense Trade Controls, ATTN: Stephen Tomchik, Regulatory Change, USML Category II, III, and XVIII, 12th Floor, SA–1, Washington, D.C. 20522–0112.

**List of Subjects in 22 CFR Parts 121 and 123**

Arms and munitions, Exports.

Accordingly, for the reasons set forth above, Title 22, Chapter I, Subchapter M, Parts 121 and 123 are amended as follows:

## PART 121—UNITED STATES MUNITIONS LIST

1. The authority citation for Part 121 continues to read as follows:

**Authority:** Sec. 2, 38, and 71, Pub. L. 90–629, 90 Stat. 744 (22 U.S.C. 2752, 2278, 2797); E.O. 11958, 42 FR 4311; 3 CFR, 1977 Comp., p. 79; 22 U.S.C. 2658; Pub. L. 105–261, 112 Stat. 1920.

2. In § 121.1, Category II and Category III are revised; Category VII is amended by revising paragraphs (c) through (i); Category XVI is revised; and Category XVIII is added to read as follows:

**§ 121.1 General. The United States Munitions List.**

* * * * *

**Category II-Guns and Armament**

*(a) Guns over caliber .50 (12.7mm, whether towed, airborne, self-propelled, or fixed, including but not limited to, howitzers, mortars, cannons and recoilless rifles.

(b) Flame throwers specifically designed or modified for military application.

(c) Apparatus and devices for launching or delivering ordnance, other than those articles controlled in Category IV.

*(d) Kinetic energy weapon systems specifically designed or modified for destruction or rendering mission-abort of a target.

(e) Signature control materials (*e.g.*, parasitic, structural, coatings, screening) techniques, and equipment specifically designed, developed, configured, adapted or modified to alter or reduce the signature (*e.g.*, muzzle flash suppression, radar, infrared, visual, laser/electro-optical, acoustic) of defense articles controlled by this category.

*(f) Engines specifically designed or modified for the self-propelled guns and howitzers in paragraph (a) of this category.

(g) Tooling and equipment specifically designed or modified for the production of defense articles controlled by this category.

(h) Test and evaluation equipment and test models specifically designed or modified for the articles controlled by this category. This includes but is not limited to diagnostic instrumentation and physical test models.

(i) Autoloading systems for electronic programming of projectile function for the defense articles controlled in this Category.

(j) All other components, parts, accessories, attachments and associated equipment specifically designed or modified for the articles in paragraphs (a) through (i) of this category. This includes but is not limited to mounts and carriages for the articles controlled in this category.

(k) Technical data (as defined in § 120.10 of this subchapter) and defense services (as defined in § 120.9 of this subchapter) directly related to the defense articles enumerated in paragraphs (a) through (j) of this category. Technical data directly related to the manufacture or production of any defense articles enumerated elsewhere in this category that are designated as Significant Military Equipment (SME) shall itself be designated SME.

(l) The following interpretations explain and amplify the terms used in this category and elsewhere in this subchapter:

(1) The kinetic energy weapons systems in paragraph (d) of this category include but are not limited to:

(i) Launch systems and subsystems capable of accelerating masses larger than 0.1g to velocities in excess of 1.6km/s, in single or rapid fire modes, using methods such as: electromagnetic, electrothermal, plasma, light gas, or chemical;

(ii) Prime power generation, electric armor, energy storage, thermal management; conditioning, switching or fuel-handling equipment; and the electrical interfaces between power supply gun and other turret electric drive function;

(iii) Target acquisition, tracking fire control or damage assessment systems; and

(iv) Homing seeker, guidance or divert propulsion (lateral acceleration) systems for projectiles.

(2) The articles in this category include any end item, component, accessory, attachment part, firmware, software or system that has been designed or manufactured using technical data and defense services controlled by this category.

(3) The articles specifically designed or modified for military application controlled in this category include any article specifically developed, configured, or adapted for military application.

**Category III—Ammunition/Ordnance**

*(a) Ammunition/ordnance for the articles in Categories I and II of this section.

(b) Ammunition/ordnance handling equipment specifically designed or modified for the articles controlled in this category, such as, belting, linking, and de-linking equipment.

(c) Equipment and tooling specifically designed or modified for the production of defense articles controlled by this category.

(d) Components, parts, accessories, attachments and associated equipment specifically designed or modified for the articles in this category:

*(1) Guidance and control components for the articles in paragraph (a) of this category;

*(2) Safing, arming and fuzing components (including target detection and localization devices) for the articles in paragraph (a) of this category; and

(3) All other components, parts, accessories, attachments and associated equipment for the articles in paragraphs (a) through (c) of this category.

(e) Technical data (as defined in § 120.10 of this subchapter) and defense services (as defined in § 120.9 of this subchapter) directly related to the defense articles enumerated in paragraphs (a) through (d) of this category. Technical data directly related to the manufacture or production of any defense articles enumerated elsewhere in this category that are designated as Significant Military Equipment (SME) shall itself be designated SME.

(f) The following explains and amplifies the terms used in this category and elsewhere in this subchapter:

(1) The components, parts, accessories and attachments controlled in this category include, but are not limited to cartridge cases, powder bags (or other propellant charges), bullets, jackets, cores, shells (excluding shotgun shells), projectiles (including canister rounds and submunitions therefor), boosters, firing components therefor, primers, and other detonating devices for the defense articles controlled in this category.

(2) This category does not control cartridge and shell casings that, prior to export, have been rendered useless beyond the possibility of restoration for use as a cartridge or shell casing by means of heating, flame treatment, mangling, crushing, cutting or popping.

(3) Equipment and tooling in paragraph (c) of this category does not include equipment for hand-loading ammunition.

(4) The articles in this category include any end item, component, accessory, attachment, part, firmware, software, or system that has been designed or manufactured using technical data and defense services controlled by this category.

(5) The articles specifically designed or modified for military application controlled in this category include any article specifically developed, configured, or adapted for military application

* * * * *

**Category VII—Tanks and Military Vehicles**

* * * * *

(c) Military trucks, trailers, hoists, and skids specifically designed, modified, or equipped to mount or carry weapons of Categories I, II and IV of this section or for carrying and handling the articles in paragraph (a) of Categories III and IV of this section.

*(d) Military recovery vehicles.

*(e) Amphibious vehicles.

*(f) Engines specifically designed or modified for the vehicles in paragraphs (a), (b), and (e) of this category.

(g) All specifically designed or modified components, parts, accessories, attachments, and associated equipment for the articles in this category, including but not limited to

military bridges and deep water fording kits.

(h) Technical data (as defined in § 120.10 of this subchapter) and defense services (as defined in § 120.9 of this subchapter) directly related to the defense articles enumerated in paragraphs (a) through (g) of this category. Technical data directly related to the manufacture or production of any defense articles enumerated elsewhere in this category that are designated as Significant Military Equipment (SME) shall itself be designated SME.

(i) The following explains and amplifies the terms used in this category and elsewhere in this subchapter.

(1) An amphibious vehicle in paragraph (e) of this category is an automotive vehicle or chassis which embodies all-wheel drive, is equipped to meet special military requirements, and which has sealed electrical system or adaptation features for deep water fording.

(2) The articles in this category include any end item, component, accessory, attachment part, firmware, software or system that has been designed or manufactured using technical data and defense service controlled by this category.

* * * * *

**Category XVI—Nuclear Weapons, Design and Testing Related Items**

*(a) Any article, material, equipment, or device which is specifically designed or modified for use in the design, development, or fabrication of nuclear weapons or nuclear explosive devices. (See § 123.20 of this subchapter and Department of Commerce Export Administration Regulations, 15 CFR 742.3 and 744.2).

*(b) Any article, material, equipment, or device which is specifically designed or modified for use in the devising, carrying out, or evaluating of nuclear weapons tests or any other nuclear explosions (including for modeling or simulating the employment of nuclear weapons or the integrated operational use of nuclear weapons), except such items as are in normal commercial use for other purposes.

*(c) Nuclear radiation detection and measurement devices specifically designed or modified for military applications.

(d) All specifically designed or modified components and parts, accessories, attachments, and associated equipment for the articles in this category.

(e) Technical data (as defined in § 120.10 of this subchapter), and defense services (as defined in § 120.9 of this subchapter) directly related to the defense articles enumerated in paragraphs (a) through (d) of this category. (See also, § 123.20 of this subchapter.) Technical data directly related to the manufacture or production of any defense articles enumerated elsewhere in this category that are designated as Significant Military Equipment (SME) shall itself be designated SME.

* * * * *

**Category XVIII—Directed Energy Weapons**

*(a) Directed energy weapon systems specifically designed or modified for military applications (*e.g.*, destruction, degradation or rendering mission-abort of a target). These include, but are not limited to:

(1) Laser systems, including continuous wave or pulsed laser systems, specifically designed or modified to cause blindness;

(2) Lasers of sufficient continuous wave or pulsed power to effect destruction similar to the manner of conventional ammunition;

(3) Particle beam systems;

(4) Particle accelerators that project a charged or neutral particle beam with destructive power;

(5) High power radio-frequency (RF) systems;

(6) High pulsed power or high average power radio frequency beam transmitters that produce fields sufficiently intense to disable electronic circuitry at distant targets;

(7) Prime power generation, energy storage, switching, power conditioning, thermal management or fuel-handling equipment;

(8) Target acquisition or tracking systems;

(9) Systems capable or assessing target damage, destruction or mission-abort;

(10) Beam-handling, propagation or pointing equipment;

(11) Equipment with rapid beam slew capability for rapid multiple target operations;

(12) Negative ion beam funneling equipment; and,

(13) Equipment for controlling and slewing a high-energy ion beam.

*(b) Equipment specifically designed or modified for the detection or identification of, or defense against, articles controlled in paragraph (a) of this category.

(c) Tooling and equipment specifically designed or modified for the production of defense articles controlled by this category.

(d) Test and evaluation equipment and test models specifically designed or modified for the defense articles controlled by this category. This includes, but is not limited to, diagnostic instrumentation and physical test models.

(e) Components, parts, accessories, attachments and associated equipment specifically designed or modified for the articles in paragraphs (a) through (d) of this category.

(f) Technical data (as defined in § 120.10 of this subchapter) and defense services (as defined in § 120.9 of this subchapter) directly related to the defense articles enumerated in paragraphs (a) through (e) of this category. Technical data directly related to the manufacture or production of any defense articles enumerated in this category that are designated as Significant Military Equipment (SME) shall itself be designated SME.

(g) The following interpretations explain and amplify terms used in this category and elsewhere in this subchapter:

(1) The components, parts, accessories, attachments and associated equipment include, but are not limited to adaptive optics and phase conjugators components, space-qualified accelerator components, targets and specifically designed target diagnostics, current injectors for negative hydrogen ion beams, and space-qualified foils for neutralizing negative hydrogen isotope beams.

(2) The articles controlled in this category include any end item, component, accessory, attachment, part, firmware, software or system that has been designed or manufactured using technical data and defense services controlled by this category.

(3) The articles specifically designed or modified for military application controlled in this category include any article specifically developed, configured, or adapted for military application.

* * * * *

*Sec. 121.4 [Removed and Reserved]*

3. Section 121.4 is removed and reserved.

*Sec. 121.6 [Removed and Reserved]*

4. Section 121.6 is removed and reserved.

## PART 123—LICENSES FOR THE EXPORT OF DEFENSE ARTICLES

5. The authority citation for Part 123 continues to read as follows:

**Authority:** Secs. 2, 38, and 71, Pub. L. 90–629, 90 Stat. 744 (22 U.S.C. 2752, 2278, 2797); 22 U.S.C. 2753; E.O. 11958, 42 FR 4311; 3 CFR, 1977 Comp., p. 79; 22 U.S.C. 2658; Pub. L. 105–261, 112 Stat. 1920.

6. Section 123.20 is revised to read as follows:

**§ 123.20 Nuclear related controls.**

(a) The provisions of this subchapter do not apply to equipment, technical data or services in Category VI(e) and Category XVI of § 121.1 of this subchapter to the extent such equipment, technical data or services are under the export control of the Department of Energy or the Nuclear Regulatory Commission pursuant to the Atomic Energy Act of 1954, as amended, and the Nuclear Non-Proliferation Act of 1978, as amended, or is a government transfer authorized pursuant to these Acts.

(b) The transfer of materials, including special nuclear materials, nuclear parts of nuclear weapons, or other non-nuclear parts of nuclear weapons systems involving Restricted Data or of assistance involving any person directly or indirectly engaging in the production or use thereof is prohibited except as authorized by the Atomic Energy Act of 1954, as amended. The transfer of Restricted Data or such assistance is prohibited except as authorized by the Atomic Energy Act of 1954, as amended. The technical data or defense services relating to nuclear weapons, nuclear weapons systems or related defense purposes (and such data or services relating to applications of atomic energy for peaceful purposes, or related research and development) may constitute Restricted Data or such assistance, subject to the foregoing prohibition.

(c) A license for the export of any machinery, device, component, equipment, or technical data relating to equipment referred to in Category VI(e) of § 121.1 of this subchapter will not be granted unless the proposed equipment comes within the scope of an existing Agreement for Cooperation for Mutual Defense Purposes concluded pursuant to the Atomic Energy Act of 1954, as amended, with the government of the country to which the Article is to be exported. Licenses may be granted in the absence of such an agreement only:

(1) If the proposed export involves an article which is identical to that in use in an unclassified civilian nuclear power plant,

(2) If the proposed export has no relationship to naval nuclear propulsion, and

(3) If it is not for use in a naval propulsion plant.

7. Section 123.27(a)(1) is revised to read as follows:

**§ 123.27 Special licensing regime for exports to U.S. allies of commercial communications satellite components, systems, parts, accessories, attachments and associated technical data.**

(a) * * *

(1) The proposed exports or re-exports concern exclusively one or more countries of the North Atlantic Treaty Organization (Belgium, Canada, Czech Republic, Denmark, France, Germany, Greece, Hungary, Iceland, Italy, Luxembourg, The Netherlands, Norway, Poland, Portugal, Spain, Turkey, United Kingdom, and the United States) and/or one or more countries which have been designated in accordance with section 517 of the Foreign Assistance Act of 1961 as a major non-NATO ally (and as defined further in section 644(q) of that Act) for purposes of that Act and the Arms Export Control Act (Argentina, Australia, Bahrain, Egypt, Israel, Japan, Jordan, New Zealand and the Republic of Korea).

* * * * *

Dated: August 16, 2002.

**John R. Bolton,**

*Under Secretary, Arms Control and International Security, Department of State.*

[FR Doc. 02–23715 Filed 9–18–02; 8:45 am]

BILLING CODE 4710–25–P

---

## DEPARTMENT OF JUSTICE

## Office of the Attorney General

## 28 CFR Part 0

**[DEA–231F; A.G. Order No. 2614–2002]**

## Organization; Drug Enforcement Administration

**AGENCY:** Department of Justice.

**ACTION:** Final rule.

**SUMMARY:** This rule makes a number of revisions to the Drug Enforcement Administration's and Federal Bureau of Investigation's regulations concerning agency management. Specifically, the updated regulations include a number of redelegations of authority, including the authority to issue administrative subpoenas, the authority to authorize disclosure of official information, the authority to execute certifications to authenticate documents and the authority to cross-designate Federal law enforcement officers.

**EFFECTIVE DATE:** September 19, 2002.

**FOR FURTHER INFORMATION CONTACT:** Cynthia R. Ryan, Chief Counsel, Drug Enforcement Administration, U.S. Department of Justice, Washington, DC 20537, Telephone (202) 307–1000.

**SUPPLEMENTARY INFORMATION:** This final rule implements a number of changes to Title 28, Code of Federal Regulations (CFR), Part 0, regarding agency management for the Drug Enforcement Administration (DEA) and Federal Bureau of Investigation (FBI). The updated regulations include a number of revisions to the Drug Enforcement Administration's and the Federal Bureau of Investigation's redelegations of authority, including the authority to issue administrative subpoenas, the authority to authorize disclosure of official information, the authority to execute certifications to authenticate documents and the authority to cross-designate Federal law enforcement officers. Also included is a minor change in wording regarding the authority to release information in order to add the words ''or demands,'' and a change in the cross-reference to a subsection (b) of Title 21, section 873, concerning cross-designation of Federal law enforcement officers, in order to correct a typographical error. A detailed explanation of the amendments follows.

### A. 28 CFR 0.103

The revision to these provisions concerns the Administrator's authority to authorize the testimony of DEA officials in criminal prosecutions. The current language refers only to authorization of testimony in response to ''subpoenas.'' This language is being changed to 'subpoenas or demands,'' because prosecutors rarely issue subpoenas when requesting DEA employees' testimony in criminal prosecutions.

### B. 28 CFR 0.100, Appendix to Subpart R, Section 2

The redelegations of authority to DEA supervisors include the following changes:

*1. Authorization of Testimony*

Among other things, this section redelegates authority to DEA Special

Agents-in-Charge and Laboratory Directors to permit the testimony of DEA officials in response to prosecution subpoenas. Similar to the delegation of authority in 28 CFR 0.103, these redelegations of authority refer only to testimony in response to ''subpoenas.'' This language is being changed to ''subpoenas or demands'' because, again, prosecutors rarely issue subpoenas when requesting DEA employees' testimony in criminal prosecutions.

*2. Release of Headquarters Information and Testimony of Headquarters Employees*

Currently, DEA regulations include no redelegation of authority from the Administrator for the release of information obtained by DEA Headquarters or to authorize the testimony of Headquarters employees in response to subpoenas or demands from prosecutors. In order to avoid the necessity of having the Administrator approve routine requests for information and testimony made to Headquarters employees, authority is being redelegated to the Deputy Administrator, Assistant Administrators, and Office Heads. Similar redelegations of authority for the FBI have also been included, at the FBI's request.

**C. 28 CFR Appendix to Subpart R, Section 4**

The redelegations of authority for issuance of administrative subpoenas will be changed as follows. Currently, the regulations redelegate authority to issue administrative subpoenas to the Chief Inspector, Deputy Chief Inspector, and Associate Deputy Chief Inspector of DEA's Office of Professional Responsibility (OPR), DEA and FBI Special Agents-in-Charge, Inspectors assigned to the Inspection Division, DEA Associate Special Agents-in-Charge, DEA and FBI Assistant Special Agents-in-Charge, DEA Resident Agents-in-Charge, DEA Diversion Program Managers, and FBI Supervisory Senior Resident Agents. Due to a reorganization, there is now a DEA Deputy Chief Inspector and an Associate Chief Inspector for DEA's Office of Inspections. Those officials are being provided with the authority to issue administrative subpoenas, in order to provide them with the same authority already afforded the Deputy Chief Inspector and Associate Deputy Chief Inspector for OPR and all Inspectors in the Inspection Division. For purposes of increased efficiency, such authority is also being redelegated to DEA Special Agent Group Supervisors and those FBI Special Agent Squad Supervisors with management responsibility over Organized Crime/Drug Program Investigations. The FBI has requested the change.

**D. 28 CFR Appendix to Subpart R, Section 5**

At present, only the Chief Counsel has authority to authenticate DEA documents. The Director of DEA's Mid-Atlantic Laboratory also needs this authority because the Mid-Atlantic Laboratory is in the unique position of being required to analyze drug exhibits for both the Federal and D.C. courts, and all drug analyses for D.C. Superior Court must be certified. At present, the laboratory uses six notaries public to certify documents. Authorizing the lab director to authenticate documents will save much time and effort.

**E. 28 CFR Appendix to Subpart R, Section 10**

This section concerns the authority to deputize state and local law enforcement officers as DEA Task Force Officers. The only change to this section is to provide the new title of the official authorized to deputize state and local law enforcement officers.

**F. 28 CFR Appendix to Subpart R, Section 11**

This section concerns the authority to cross-designate Federal law enforcement officers. The only changes to this section are to provide the new title of the official authorized to cross-designate and to correct a typographical error in the reference to the statute that permits cross-designations.

**Procedure Act**

This rule relates to a matter of agency management or personnel and, therefore, is exempt from the usual requirements of prior notice and comment and a 30-day delay in effective date. *See* 5 U.S.C. 553(a)(2).

**Regulatory Flexibility Act**

The Attorney General, in accordance with the Regulatory Flexibility Act, 5 U.S.C. 605(b), has reviewed this rule and, by approving it, certifies that it will not have a significant economic impact on a substantial number of small entities because it pertains to personnel and administrative matters affecting the Department. Further, a Regulatory Flexibility Analysis was not required to be prepared for this final rule because the Department was not required to publish a general notice of proposed rulemaking for this matter.

**Executive Order 12866**

This rule has been drafted and reviewed in accordance with Executive Order 12866, Regulatory Planning and Review, section 1(b), Principles of Regulation. This rule is limited to agency organization, management and personnel as described by Executive Order 12866, (3)(d)(3) and, therefore, is not a ''regulation'' or ''rule'' as defined by that Executive Order. Accordingly, this rule has not been reviewed by the Office of Management and Budget.

**Executive Order 12988**

This regulation meets the applicable standards set forth in Sections 3(a) and 3(b)(2) of Executive Order 12988, Civil Justice Reform.

**Executive Order 13132**

This rule will not have substantial direct effects on the States, on the relationship between the national government and the States, or on the distribution of power and responsibilities among the various levels of government. Therefore, in accordance with Executive Order 13132,Federalism, the Department has determined that this rule does not have sufficient federalism implications to warrant the preparation of a federalism summary impact statement.

**Unfunded Mandates Reform Act of 1995**

This rule will not result in the expenditure by State, local, and tribal governments, in the aggregate, or by the private sector, of $100 million or more in any one year, and it will not significantly or uniquely affect small governments. Therefore, no actions are necessary under the provisions of the Unfunded Mandates Reform Act of 1995, 2 U.S.C. 1501 *et seq.*

**Small Business Regulatory Enforcement Fairness Act of 1996**

This rule is not a major rule as defined by section 251 of the SmallBusiness Regulatory Enforcement Fairness Act of 1996, 5 U.S.C. 804. This rule will not result in an annual effect on the economy of $100 million or more; a major increase in costs or prices; or significant adverse effects on competition, employment, investment, productivity, innovation, or the ability of United States-based companies to compete with foreign-based companies in domestic and export markets.

This action pertains to agency management, personnel, and organization and does not substantially affect the rights or obligations of non-agency parties. Accordingly, it is not a rule for purposes of the reporting requirement of 5 U.S.C. 801.

**Congressional Review Act**

The Department of Justice has determined that this action is a rule relating to agency organization, procedure or practice that does not substantially affect the rights or obligations of non-agency parties and, accordingly, is not a ''rule'' as that term is used by the Congressional Review Act (Subtitle E of the Small Business Regulatory Enforcement Fairness Act of 1996 (SBREFA), Pub. L. No. 104–121,

sections 251–53). Therefore, the reporting requirement of 5 U.S.C. 801 does not apply.

**List of Subjects in 28 CFR Part 0.**

Authority delegations (Government agencies), Government employees, Organization and functions (government agencies), Whistleblowing.

Accordingly, by virtue of the authority vested in me as Attorney General, including 5 U.S.C. 301 and 28 U.S.C. 509 and 510, Part 0 of Title 28 of the Code of Federal Regulations is amended as follows:

## PART 0—ORGANIZATION OF THE DEPARTMENT OF JUSTICE [AMENDED]

1. The authority citation for Part 0 continues to read as follows:

**Authority:** 5 U.S.C. 301; 28 U.S.C. 509, 510, 515–519.

2. Paragraph (a)(3) of section 0.103 is revised to read as follows:

**Sec. 0.103 Release of information.**

(a) * * *

(3) To authorize the testimony of DEA officials in response to subpoenas or demands issued by the prosecution in Federal, State, or local criminal cases involving controlled substances.

* * * * *

3. In the Appendix to Subpart R, sections 2, 5, 10, and 11 are revised, and paragraph (a) of Section 4 is revised to read as follows:

**Appendix to Subpart R—Redelegation of Functions**

* * * * *

*Sec. 2. Supervisors.* All Special Agents-in-Charge of the DEA and the FBI are authorized to conduct enforcement hearings under 21 U.S.C. 883, and to take custody of seized property under 21 U.S.C. 881. All Special Agents-in-Charge of the DEA and the FBI, the DEA Deputy Administrator, Assistant Administrators and Office Heads, and the FBI Executive Assistant Directors, Assistant Directors, Deputy Assistant Directors, and Section Chiefs, are authorized to release information pursuant to 28 CFR 0.103(a)(1) and (2) that is obtained by the DEA and the FBI, and to authorize the testimony of DEA and FBI officials in response to prosecution subpoenas or demands under 28 CFR 0.103(a)(3). All DEA Laboratory Directors are authorized to release information pursuant to 28 CFR 0.103(a)(1) and (2) that is obtained by a DEA laboratory, and to authorize the testimony of DEA laboratory personnel in response to prosecution subpoenas or demands under 28 CFR 0.103(a)(3). All DEA Special Agents-in-Charge are authorized to take custody of, and make disposition of, controlled substances seized pursuant to 21 U.S.C. 824(g).

* * * * *

*Sec. 4. Issuance of subpoenas.* (a) The Chief Inspector of the DEA; the Deputy Chief Inspectors and Associate Deputy Chief Inspectors of the Office of Inspections and the Office of Professional Responsibility of the DEA; all Special Agents-in-Charge of the DEA and the FBI; DEA Inspectors assigned to the Inspection Division; DEA Associate Special Agents-in-Charge; DEA and FBI Assistant Special Agents-in-Charge; DEA Resident Agents-in-Charge; DEA Diversion Program Managers; FBI Supervisory Senior Resident Agents; DEA Special Agent Group Supervisors; and those FBI Special Agent Squad Supervisors who have management responsibility over Organized Crime/Drug Program Investigations, are authorized to sign and issue subpoenas with respect to controlled substances, listed chemicals, tableting machines or encapsulating machines under 21 U.S.C. 875 and 876 in regard to matters within their respective jurisdictions.

* * * * *

*Sec. 5. Legal functions.* The Chief Counsel and the Director of DEA's Mid-Atlantic Laboratory are authorized to execute any certification required to authenticate any documents pursuant to 28 CFR 0.146. The Chief Counsel is also authorized to adjust, determine, compromise, and settle any claims involving the Drug Enforcement Administration under 28 U.S.C. 2672 relating to tort claims where the amount of the proposed adjustment, compromise, settlement or award does not exceed $2,500; to formulate and coordinate the proceedings relating to the conduct of hearings under 21 U.S.C. 875, including the signing and issuance of subpoenas, examining of witnesses, and receiving evidence; to adjust, determine, compromise and settle *any* tort claims when such claims arise in foreign countries in connection with DEA operations abroad, and to conduct enforcement hearings under 21 U.S.C. 883. The Forfeiture Counsel of the DEA is authorized to exercise all necessary functions with respect to decisions on petitions under 19 U.S.C. 1618 for remission or mitigation of forfeitures incurred under 21 U.S.C. 881.

* * * * *

*Sec. 10. Deputization of State and Local Law Enforcement Officers.* The Chief, Investigative Support Section, Office of Operations Management, Operations Division, is authorized to exercise all necessary functions with respect to the deputization of state and local law enforcement officers as Task Force Officers of DEA pursuant to 21 U.S.C. 878(a).

*Sec. 11. Cross-Designation of Federal Law Enforcement Officers.* The Chief, Investigative Support Section, Office of Operations Management, Operations Division is authorized to exercise all necessary functions with respect to the cross-designation of Federal law enforcement officers to undertake title 21 drug investigations under supervision of the DEA pursuant to 21 U.S.C. 873(b).

* * * * *

Dated: September 13, 2002.

**John Ashcroft,**

*Attorney General.*

[FR Doc. 02–23780 Filed 9–18–02; 8:45 am]

BILLING CODE 4410–09–P

## ENVIRONMENTAL PROTECTION AGENCY

## 40 CFR Parts 9 and 430

**[FRL–7379–4]**

**RIN 2040–AD23**

## Effluent Limitations Guidelines and Standards for the Bleached Papergrade Kraft and Soda Subcategory of the Pulp, Paper, and Paperboard Point Source Category

**AGENCY:** Environmental Protection Agency (EPA).

**ACTION:** Final rule.

**SUMMARY:** This action promulgates an amendment to the effluent limitations guidelines and standards under the Clean Water Act for the Pulp, Paper and Paperboard Point Source Category (also known as the ''Cluster Rules''). The amendment allows new and existing, direct and indirect discharging mills in the Bleached Papergrade Kraft and Soda Subcategory (Subpart B) to demonstrate compliance with applicable chloroform limitations and standards at a fiber line in lieu of certain monitoring requirements by performing initial monitoring to demonstrate compliance with the applicable chloroform limitations or standards; certifying that the fiber line is not using elemental chlorine or hypochlorite as bleaching agents; and maintaining certain process and operating conditions identified during the compliance demonstration period. In compliance with the Paperwork Reduction Act (PRA), EPA is also promulgating a technical

amendment that amends the table that lists the Office of Management and Budget (OMB) control numbers issued under the PRA for the Bleached Papergrade Kraft and Soda and the Papergrade Sulfite Subcategories of the Pulp, Paper, and Paperboard Point Source Category published April 15, 1998.

**DATES:** The technical amendment to 40 CFR part 9, is effective September 19, 2002. The amendments to 40 CFR 430.02(f), are effective October 21, 2002.

**ADDRESSES:** The public record (excluding confidential business information) for this rulemaking is available for review at the EPA's Water Docket, Monday through Friday, excluding Federal holidays, between 9 a.m. and 3:30 p.m. Eastern time. The Water Docket is located at EPA West, 1301 Constitution Avenue, NW, Room B135, Washington, DC 20004. Please call the Water Docket at (202) 566–2426 for an appointment before you come in.

**FOR FURTHER INFORMATION CONTACT:** Mr. M. Ahmar Siddiqui, U.S. Environmental Protection Agency, Office of Science and Technology, Engineering and Analysis Division (Mail Code 4303T), EPA West, 1200 Pennsylvania Avenue NW, Washington, DC 20460; call (202) 566–1044 or e-mail: *siddiqui.ahmar@epa.gov.*

**SUPPLEMENTARY INFORMATION:** This preamble describes the legal authority of this final rule, background information on the development of the rule, and the rationale for the chloroform certification provisions.

## Regulated Entities

Entities potentially regulated by this action are those new and existing, direct and indirect discharging mills that chemically pulp wood fiber using kraft or soda methods to produce bleached papergrade pulp and/or bleached paper or paperboard. Regulated categories and entities include:

| Category | SIC code | NAICS code | Examples of regulated entities |
|---|---|---|---|
| Industry | 2611, 2621 | 33211, 322121 | New and existing, direct and indirect discharging mills regulated under the Bleached Papergrade Kraft and Soda Subcategory (Subpart B). |

This table is not intended to be exhaustive, but rather provides a guide for readers regarding entities likely to be regulated by today's action. This table lists the types of entities that EPA is now aware could potentially be regulated by today's action. Other types of entities not listed in the table could also be regulated. To determine whether your facility is regulated by today's action, you should carefully examine the applicability criteria in § 430.20 of Title 40 of the Code of Federal Regulations. If you have questions regarding the applicability of this action to a particular entity, consult the person listed in the preceding **FOR FURTHER INFORMATION CONTACT** section.

## Judicial Review

In accordance with 40 CFR 23.2, today's rule will be considered promulgated for the purposes of judicial review at 1 pm Eastern Time on October 3, 2002. Under section 509(b)(1) of the Clean Water Act (CWA), judicial review of today's amendment to 40 CFR part 430 is available in the United States Court of Appeals by filing a petition for review within 120 days from the date of promulgation of this rule. Under section 509(b)(2) of the CWA, the requirements in this rule may not be challenged later in civil or criminal proceedings brought by EPA to enforce these requirements.

## Compliance Dates

This amendment offers new and existing, direct and indirect discharging Subpart B mills an alternative to the minimum monitoring requirements for chloroform codified at 40 CFR 430.02. Direct discharging mills choosing the certification alternative will be required to comply when the chloroform certification provisions are added to the discharger's National Pollutant Discharge Elimination System (NPDES) permit. Indirect discharging mills choosing the certification alternative will be required to comply when chloroform certification provisions are added to the discharger's pretreatment control agreement.

## I. Legal Authority

This rule establishes requirements for certifying in lieu of monitoring as a basis for demonstrating compliance with certain chloroform limitations and standards. This amendment to 40 CFR part 430 is promulgated under the authority of sections 301, 304, 306, 307, 308, 402, and 501 of the Clean Water Act, as amended, 33 U.S.C. 1311, 1314, 1316, 1317, 1318, 1342, and 1361.

## II. The Rule Authorizing Certification in Lieu of Monitoring for Chloroform Amendment

### *A. Background on Minimum Monitoring Requirements for Chloroform Effluent Limitations, Guidelines and Standards*

On April 15, 1998 (63 FR 18504), EPA promulgated effluent limitations guidelines and standards to reduce the discharge of toxic, conventional, and nonconventional pollutants in wastewaters and emission standards to reduce emissions of hazardous air pollutants from the pulp, paper, and paperboard industry. These integrated regulations were known as the ''Cluster Rules'' and included new regulations for mills with operations in Subpart B (Bleached Papergrade Kraft and Soda) and Subpart E (Bleached Papergrade Sulfite). As part of the Cluster Rules, EPA required mills with operations in Subpart B to demonstrate compliance with promulgated effluent limitations guidelines and standards for dioxin, furan, chloroform, and 12 chlorinated phenolic pollutants inside the discharger's facility at the point where the wastewater containing those pollutants leaves the bleach plant. EPA required a minimum monitoring frequency of once per month for dioxin, furan, and 12 chlorinated phenolic pollutants. See 40 CFR 430.02(a). For chloroform, EPA required a minimum monitoring frequency of once per week. Id. These minimum monitoring frequencies were selected because the data available at that time indicated that there can be considerable temporal variability of these pollutants in bleach plant wastewaters. *See* 63 FR 18571 (April 15, 1998).

During the development of the 1998 Cluster Rules, EPA published a Notice of Data Availability on the effluent limitations guidelines and standards (61 FR 36835, July 15, 1996). Comments on that Notice urged EPA to allow for certification of process changes (specifically, elimination of elemental chlorine and hypochlorite) in lieu of monitoring to demonstrate compliance with the effluent limitations and standards for chloroform and other parameters controlled at the bleach plant.

EPA did not include a certification option in the final Cluster Rules because the information available at that time did not demonstrate that certification of elemental chlorine free (ECF) bleaching

and elimination of hypochlorite alone were sufficient to ensure compliance. EPA based this conclusion on its finding that pulping and bleaching processes and related factors also have an effect on the rates of generation of chlorinated pollutants, as measured in mill wastewaters. Although EPA did not promulgate the certification option, EPA separately proposed to allow new and existing, direct and indirect discharging mills in Subpart B to demonstrate compliance with chloroform effluent limitations and standards for a fiber line through a certification process. *See* 63 FR 18796 (April 15, 1998). The proposed certification would function as an alternative to minimum monitoring requirements in 40 CFR 430.02 to demonstrate compliance with chloroform effluent limitations or standards at a fiber line to which the effluent limitations or standards apply. At the same time, EPA solicited additional data to document and confirm the process and operating conditions that would be necessary to provide the basis for establishing certification. In particular, EPA requested additional data to document more completely the specific relationships among processes and related variables and chloroform generation rates in air emissions and wastewaters.

*B. Summary of Comments and Data Received Since Proposal*

The American Forest and Paper Association (AF&PA) responded to EPA's solicitation for additional data to document relationships between process variables and chloroform generation rates. EPA received comments to extend its proposed certification program to all bleach plant parameters. EPA also received two study plans developed by the National Council for Air and Stream Improvement (NCASI). One of these plans dealt with chloroform; the other plan dealt with dioxin, furan, and the 12 chlorinated phenolic compounds regulated under Subpart B.

AF&PA also provided EPA with a copy of the NCASI report ''Chloroform Generation During Chlorine Dioxide Bleaching.'' The purpose of the study was to determine if certain process variables affect total chloroform generated during ECF bleaching. Pulp bleaching variables considered in NCASI's chloroform study included final pH of the first chlorine dioxide ($D_0$) stage, kappa factor, pulp type, and chlorine content of the chlorine dioxide solution used for bleaching. NCASI concluded that among the variables considered, the final pH of the first bleaching stage had the greatest impact on chloroform generation, and that kappa factor also may be important. The chlorine content of the chlorine dioxide bleaching solution also had an impact on chloroform generation, though less than the $D_0$ stage final pH.

EPA also received a comment that the proposed two-year monitoring demonstration period should be reduced to 12 months, because 52 weekly samples will provide an ample period to evaluate the range of operating variables influencing chloroform generation. This issue will be addressed in the following section.

AF&PA also commented about the clarity of the language in the proposed amendment to the regulation concerning criteria by which a discharger would be deemed in compliance. As a result, EPA has slightly modified the language in the final amendment so that the criteria for compliance are clear.

One commenter suggested that after a direct discharging mill has been allowed to demonstrate compliance through certification, renewal of an NPDES permit should include a new certification without a demonstration of compliance, unless bleach plant operations have changed. EPA believes this is unnecessary, because the minimum monitoring requirements specified in 40 CFR 430.02 apply to direct dischargers only for five years from the time they are first included in the discharger's NPDES permit, and the minimum monitoring requirements apply to indirect dischargers only until April 15, 2006. Once the minimum monitoring requirements cease to apply, the certification provisions cease to apply as well.

Commenters also suggested that EPA extend the certification option to ammonium-based and specialty grade sulfite mills. EPA, however, has not yet established numerical effluent limitations guidelines or standards for the discharge of chloroform from ammonium-based and specialty grade sulfite mills. Thus, at present, these mills have no chloroform monitoring requirements specified under part 430.

*C. Description of the Certification and Changes Since Proposal*

After careful consideration of all comments and additional analysis, EPA concludes that the following factors influence chloroform air emissions and mass loadings in wastewater: The pH of the first chlorine dioxide bleaching stage, the chlorine content of chlorine dioxide used on the bleach line, the kappa factor of the first chlorine dioxide bleaching stage, the total bleach line chlorine dioxide application rate, and the chlorine-containing compounds used for bleaching. EPA also concludes that a certification that accounts for these process and operating conditions is appropriate to allow mills to demonstrate compliance with chloroform limitations and standards. Therefore, EPA is promulgating new regulatory language at 40 CFR 430.02(f) that provides a certification process to demonstrate compliance with chloroform limitations and standards for new and existing, direct and indirect discharging Subpart B mills in lieu of the minimum monitoring requirements for chloroform at a fiber line to which the limitations or standards apply.

With respect to other parameters, EPA did not receive any new data or information addressing the effects of process variables on the generation of dioxin, furan, and the 12 chlorinated phenolic compounds. Thus, EPA has no new data with which to evaluate the commenters' suggestion that the certification proposal should be extended to all bleach plant parameters. Accordingly, EPA has limited the certification to chloroform.

EPA did not receive any new information or data to support a shorter initial compliance demonstration period or fewer measurements. Therefore, EPA has not changed the duration of the initial compliance demonstration period, concluding that two years of sampling data (a minimum of 104 measurements) is necessary to adequately characterize the full range of process and operating conditions that may be used on the fiber line and influence variability of chloroform generation. One year may not be sufficient to establish an operating parameter range that reflects the full range of variability at the plant, especially considering the potential for a changing product mix over time. EPA also noted that it is in the facility's interest to base its certification on a broad enough range of operating parameters to fully capture any variability that is consistent with meeting the prescribed chloroform limitations. If the facility certifies based on too small a range, it risks detecting parameter values outside of the range and being subject to a resumption of routine monitoring and eventual recertification. This would entail additional burden on both the facility and the permitting authority. EPA has thus decided to retain the two-year basis for the certification.

In order to be eligible to demonstrate compliance with the chloroform limitations and standards through certification, the discharger must first demonstrate, based on 104

measurements taken over a period of not less than two years of monitoring conducted weekly, that it is achieving the applicable limitations or standards for chloroform. *See* 40 CFR 430.02(f)(2)(i). Retrospective data (*e.g.*, data collected by a discharger prior to a BAT/NSPS/PSES/PSNS compliance demonstration required by a permit or pretreatment control agreement) may be used in this demonstration, if the data were collected in accordance with the requirements of 40 CFR 430.02(a). During this initial compliance demonstration period, the discharger must collect samples of its representative bleach plant effluent(s) on a weekly basis consistent with analytical method(s) approved under Part 136. If the discharger monitors for chloroform more frequently than weekly, then the discharger should use only one observation for any 24 hour period. The discharger is cautioned to carefully evaluate whether there is any possibility that the full range of chloroform variability as reflected in process operating parameters may not be captured if samples are collected more frequently than weekly. In order to justify certification authorized under 40 CFR 430.02(f), all of the monitoring results during the initial compliance demonstration period must demonstrate compliance with the chloroform effluent limitations or standards. For each sample used to make the compliance demonstration described above, the discharger is required under 40 CFR 430.02(f)(2)(ii) to maintain records of the maximum values of the following bleach plant operating parameters:

(a) The pH of the first chlorine dioxide bleaching stage;

(b) The chlorine ($Cl_2$) content of chlorine dioxide ($ClO_2$) used on the bleach line;

(c) The kappa factor of the first chlorine dioxide bleaching stage; and

(d) The total bleach line chlorine dioxide application rate.

In addition, the discharger is required under 40 CFR 430.02(f)(2)(iii) to identify the chlorine-containing compounds used for bleaching (*i.e.*, the bleach sequence) during the collection of samples used to make the compliance demonstration.

When the discharger has completed its initial compliance demonstration, it may request that its permitting or pretreatment control authority modify its permit or pretreatment control agreement to discontinue weekly chloroform monitoring of bleach plant effluent. *See* 40 CFR 430.02(f)(1). At the time that it makes this request, today's regulation requires the discharger to:

(a) Certify that the fiber line does not use either elemental chlorine or hypochlorite as bleaching agents, *see* 40 CFR 430.02(f)(2)(iv);

(b) Provide records demonstrating that, based on 104 measurements collected weekly over a period not less than two years, the fiber line complies with applicable chloroform limitations or standards, *see* 40 CFR 430.02(f)(2)(i); and

(c) Certify that it will maintain records available for inspection which document the range of process and operating conditions that occurred during the collection of each sample used to demonstrate initial compliance. Specifically, the facility must document the maximum values, observed during sample collection, of:

(i) The pH of the first chlorine dioxide bleaching stage;

(ii) The chlorine ($Cl_2$) content of chlorine dioxide ($ClO_2$) used on the bleach line;

(iii) The kappa factor of the first chlorine dioxide bleaching stage; and

(iv) The total bleach line chlorine dioxide application rate.

*See* 40 CFR 430.02(f)(2)(ii). The facility must also identify the chlorine-containing compounds used for bleaching (*i.e.*, the bleach sequence). *See* 40 CFR 430.02(f)(2)(iii).

Thereafter, at the same frequency that the discharger submits discharge monitoring reports (DMRs) to its permitting authority or periodic compliance reports (PCRs) to its pretreatment control authority, the discharger must certify that:

(a) The pH of the first chlorine dioxide bleaching stage has not exceeded the maximum value of the pH measured during initial compliance demonstration sample collection;

(b) The chlorine ($Cl_2$) content of chlorine dioxide ($ClO_2$) used on the bleach line has not exceeded the maximum $Cl_2$ content of $ClO_2$ used during initial compliance demonstration sample collection;

(c) The kappa factor of the first chlorine dioxide bleaching stage has not exceeded the maximum kappa factor employed during initial compliance demonstration sample collection;

(d) The total bleach line chlorine dioxide application rate has not exceeded the maximum chlorine dioxide application rate employed during initial compliance demonstration sample collection; and

(e) The chlorine-containing compounds used for bleaching are unchanged from those used during initial compliance demonstration sample collection.

*See* 40 CFR 430.02(f)(4). The discharger must also maintain on-site records for the fiber line of these process and operating conditions. *See* 40 CFR 430.02(f)(2)(ii). EPA does not anticipate that mills that voluntarily choose to certify in lieu of minimum monitoring for chloroform will be required to submit any confidential business information (CBI) or trade secrets as part of this program.

The requirement to monitor process and operating conditions and to maintain records of these conditions places no new burden on the discharger. Mills continuously monitor bleach plant process and operating conditions in order to ensure the quality of their product and the efficiency of their operations. They also routinely maintain records of process and operating conditions. At many mills, constant monitoring of process and operating parameters is accomplished electronically by computerized distributed control systems.

If for any reason (intentionally or due to process upset) the discharger fails to maintain process and operating conditions on the fiber line at or below the maximum values recorded for these parameters during the initial compliance demonstration period, the discharger must notify the NPDES or pretreatment authority within 30 days and must again demonstrate compliance with the applicable chloroform limitation or standard by immediately initiating monitoring of its bleach plant effluent for chloroform at a frequency similar to that required in 40 CFR 430.02(a) and for a duration determined by the permit or pretreatment control authority. *See* 40 CFR 430.02(f)(6)(i). The discharger is in violation of its chloroform limitations or standards if, after failing to maintain the process and operating conditions, it does not comply with the notice and compliance demonstration requirements in section 430.02(f)(6)(i)(A) and (B) of the rule. Once the discharger certifies that the fiber line process and operating conditions do not exceed the maximum values documented during the initial compliance demonstration period, the discharger may discontinue chloroform compliance monitoring. *See* 40 CFR 430.02(f)(6)(ii). It should be noted that failure to maintain process and operating conditions on the fiber line at or below the maximum values recorded during the initial compliance demonstration period or any subsequent period of compliance monitoring for recertification is not a violation of the discharger's permit or pretreatment control agreement.

If the discharger wishes to make a long-term change in the process and operating conditions on the fiber line, such that one or more exceeds the maximum value documented during the initial compliance demonstration, the discharger must re-certify the fiber line in order to continue to demonstrate compliance through certification in lieu of monitoring. *See* 40 CFR 430.02(f)(3). The re-certification is similar to the initial compliance demonstration, except rather than a 104 measurement monitoring period, the re-certification compliance demonstration period will be determined by the permit writer or pretreatment control authority. The Agency anticipates that the likely circumstance for long-term changes in process and operating conditions will be to make the same or similar pulps with reduced chemical usage. In this circumstance, it would be reasonable to assume that generation and discharge of chloroform should decrease. Thus, only limited data should be necessary to confirm this assumption. If, however, process and operating conditions will change to make pulps with higher brightness or other more demanding pulp properties, it would be reasonable to assume that chloroform generation and discharge could increase. Thus, more extensive data would be appropriate to confirm that effluent quality and its variability will still comply with the bleach plant chloroform effluent limitations or standards.

EPA notes that the minimum monitoring requirements specified in 40 CFR 430.02 apply to direct dischargers for five years from the time they are first included in the discharger's NPDES permit and the minimum monitoring requirements apply to indirect dischargers only until April 15, 2006. In other words, the minimum monitoring requirements specified in 40 CFR 430.02 do not apply after the expiration of the applicable time periods. Thereafter, it is the responsibility of the permit writer or pretreatment control authority to determine the appropriate monitoring frequency in accordance with 40 CFR 122.44(i) or 40 CFR part 403, as applicable. The permit writer or pretreatment control authority is authorized to decide if bleach plant chloroform monitoring will re-commence at the same minimum monitoring frequency specified at 40 CFR 430.02 or an alternative frequency.

## III. Administrative Requirements

### *A. Executive Order 12866*

Under Executive Order 12866, 58 FR 51735 (October 4, 1993), the Agency must determine whether the regulatory action is ''significant'' and therefore subject to OMB review and the requirements of the Executive Order. The Order defines ''significant regulatory action'' as one that is likely to result in a rule that may:

(1) have an annual effect on the economy of $100 million or more or adversely affect in a material way the economy, a sector of the economy, productivity, competition, jobs, the environment, public health or safety, or State, local, or tribal governments or communities;

(2) create a serious inconsistency or otherwise interfere with an action taken or planned by another agency;

(3) materially alter the budgetary impact of entitlements, grants, user fees, or loan programs or the rights and obligations of recipients thereof; or

(4) raise novel legal or policy issues arising out of legal mandates, the President's priorities, or the principles set forth in the Executive Order.

It has been determined that this is not a ''significant regulatory action'' under the terms of Executive Order 12866 and is, therefore, not subject to OMB review.

### *B. Regulatory Flexibility Act (RFA), as amended by the Small Business Regulatory Enforcement Fairness Act of 1996 (SBREFA), 5 U.S.C. 601 et seq.*

The RFA generally requires an agency to prepare a regulatory flexibility analysis of any rule subject to notice and comment rulemaking requirements under the Administrative Procedure Act or any other statute unless the agency certifies that the rule will not have a significant economic impact on a substantial number of small entities. Small entities include small businesses, small organizations, and small governmental jurisdictions.

For purposes of assessing the impacts of today's rule on small entities, small entity is defined as: (1) A small business that employs no more than 750 workers; (2) a small governmental jurisdiction that is a government of a city, county, town, school district or special district with a population of less than 50,000; and (3) a small organization that is any not-for-profit enterprise which is independently owned and operated and is not dominant in its field.

After considering the economic impacts of today's final rule on small entities, I certify that today's action will not have a significant economic impact on a substantial number of small entities because there are no small entities subject to this rule. At the time EPA published the Cluster Rules, EPA had determined that there were only three mills in Subpart B that were owned by small businesses (where small businesses are defined as firms employing no more than 750 workers) (63 FR 18504, 18611–12 (April 15, 1998)). EPA has since determined that there are no longer any small businesses in Subpart B because these mills are no longer owned by firms with fewer than 750 employees. The mills that were owned by small firms have been bought by larger firms or are owned by companies that have increased in size.

### *C. Paperwork Reduction Act*

The Office of Management and Budget (OMB) has approved the information collection requirements contained in this rule under the provisions of the Paperwork Reduction Act (PRA), 44 U.S.C. 3501 *et seq.* and has assigned OMB control number 2040–0242.

As mentioned previously, EPA established minimum monitoring frequencies for chloroform for existing and new direct and indirect discharging mills subject to Subpart B under authority of the Clean Water Act (CWA) Section 308 to demonstrate compliance with existing effluent limitations and standards for chloroform (and other pollutant parameters) promulgated under 40 CFR part 430. EPA is today allowing applicable facilities to voluntarily demonstrate compliance with chloroform limitations or standards by certifying their fiber lines in lieu of chloroform minimum monitoring required by 40 CFR 430.02. EPA has determined that this voluntary certification option significantly reduces the overall compliance burden and costs associated with meeting and demonstrating compliance with applicable chloroform limitations and standards. EPA has also determined that an initial compliance demonstration is necessary for each participating mill to establish the range of normal variability in process and operating parameters that are consistent with compliance with the chloroform effluent limitations. Once this range is established for each participating fiber line, periodic certification reports are submitted to the NPDES permit or pretreatment control authority to confirm and certify that the fiber line continues to comply with the chloroform effluent limitations and standards. The Agency's authority to provide for this voluntary certification option in lieu of minimum monitoring is Section 402(a)(2) of the CWA which directs EPA to prescribe permit conditions to assure compliance with requirements ''including conditions on data and information collection, reporting and such other requirements as [the Administrator] deems appropriate.''

Certification in lieu of chloroform minimum monitoring eliminates all sampling burden associated with the minimum monitoring requirements for chloroform. A total of 19,492 hours annually would be saved by the 80 direct and indirect discharging Subpart B mills that EPA anticipates will choose to certify their 127 fiber lines. At an hourly operator rate of $28.91 per hour for sampling activities, reduction in sampling costs associated with certifying fiber lines in lieu of minimum monitoring required by 40 CFR 430.02 for the 80 mills would be $572,760 per year ($28.91 × 19,812). In addition, the elimination of chloroform sampling activities after certification results in an associated reduction in analytical costs for the outside lab analysis of chloroform samples. The total reduction in analytical costs associated with certifying fiber lines in lieu of minimum monitoring required by 40 CFR 430.02 for the 80 mills would be $3,856,740 per year (127 fiber lines × 2 samples per fiber line × 52 weeks × $292 per analysis). An increase in reporting burden for the 80 mills would be 320 (480–160) hours annually, based on the submission of periodic certification reports in lieu of reporting chloroform compliance data in DMRs and PCRs. At an hourly technician rate of $56.91 for reporting activities, an increase in reporting costs associated with certifying fiber lines in lieu of minimum monitoring required by 40 CFR 430.02 for the 80 mills would be $18,210 per year ($56.91 × 320). Therefore, the overall reduction in the total burden and cost to demonstrate compliance with minimum monitoring requirements by certifying fiber lines in lieu of minimum monitoring required by 40 CFR 430.02 for the 80 mills would be $4,411,290 per year ($572,760 + $3,856,740–$18,210). This reduction in cost translates to approximately $55,140 annually per mill.

The Agency does not estimate any change in burden for State authorized NPDES and pretreatment control authorities or EPA from the burden associated with minimum monitoring required by 40 CFR 430.02 for facilities ( *i.e.*, permitees) wishing to certify their fiber lines in lieu of chloroform minimum monitoring requirements.

Burden means the total time, effort, or financial resources expended by persons to generate, maintain, retain, or disclose or provide information to or for a Federal agency. This includes the time needed to review instructions; develop, acquire, install, and utilize technology and systems for the purposes of collecting, validating, and verifying information, processing and maintaining information, and disclosing and providing information; adjust the existing ways to comply with any previously applicable instructions and requirements; train personnel to be able to respond to a collection of information; search data sources; complete and review the collection of information; and transmit or otherwise disclose the information.

An Agency may not conduct or sponsor, and a person is not required to respond to a collection of information unless it displays a currently valid OMB control number. The OMB control numbers for EPA's regulations are listed in 40 CFR part 9 and 48 CFR Chapter 15. EPA is amending the table in 40 CFR part 9 of currently approved ICR control numbers issued by OMB for various regulations to list the information requirements contained in this final rule.

In addition to the information collection request (ICR) being approved as part of today's action, OMB previously approved an information collection request associated with the general minimum monitoring requirements in the Cluster Rules, codified at 40 CFR 430.02, under the provisions of the PRA and assigned OMB control number 2040–0243. Today's action includes a technical amendment to 40 CFR part 9 to list the OMB approval number for those previously promulgated and approved requirements. There is no burden associated with today's technical amendment.

The ICR for the general minimum monitoring requirements was subject to public notice and comment prior to OMB approval. Due to the technical nature of the table, EPA finds that further notice and comment is unnecessary. As a result, EPA finds that there is ''good cause'' under section 553(b)(B) of the Administrative Procedure Act, 5 U.S.C. 553(b)(B), to amend this table without prior notice and comment. For the same reason, there is also good cause to make this change effective upon publication.

*D. Unfunded Mandates Reform Act (UMRA)*

Title II of the Unfunded Mandates Reform Act of 1995 (UMRA), Pub. L. 104–4, establishes requirements for Federal agencies to assess the effects of their regulatory actions on State, local, and tribal governments and the private sector. Under Section 202 of the UMRA, EPA generally must prepare a written statement, including a cost-benefit analysis, for proposed and final rules with ''Federal mandates'' that may result in expenditures to State, local, and tribal governments, in the aggregate, or to the private sector, of $100 million or more in any one year. Before promulgating an EPA rule for which a written statement is needed, section 205 of the UMRA generally requires EPA to identify and consider a reasonable number of regulatory alternatives and adopt the least costly, most cost-effective or least burdensome alternative that achieves the objectives of the rule. The provisions of section 205 do not apply when they are inconsistent with applicable law. Moreover, section 205 allows EPA to adopt an alternative other than the least costly, most cost-effective or least burdensome alternative if the Administrator publishes the final rule with an explanation why that alternative was not adopted. Before EPA establishes any regulatory requirements that may significantly or uniquely affect small governments, including tribal governments, it must have developed under section 203 of the UMRA a small government agency plan. The plan must provide for notifying potentially affected small governments, enabling officials of affected small governments to have meaningful and timely input in the development of EPA regulatory proposals with significant Federal intergovernmental mandates, and informing, educating, and advising small governments on compliance with the regulatory requirements.

Today's rule contains no Federal mandates (under the regulatory provisions of Title II of the UMRA) for State, local, or tribal governments or the private sector. This is due to the following two reasons: (1) the UMRA generally excludes from the definition of ''Federal intergovernmental mandate'' duties that arise from participation in a voluntary federal program; and (2) the UMRA generally excludes from the definition of ''Federal private sector mandate'' duties that arise from participation in a voluntary federal program. These two reasons arise from the fact that participation in the certification program is entirely voluntary. Thus, today's rule is not subject to the requirements of sections 202 and 205 of the UMRA.

EPA has determined that today's action contains no regulatory requirements that might significantly or uniquely affect small governments. This is because participation in the certification program is strictly voluntary. Thus, today's rule is not subject to the requirements of Section 203 of the UMRA.

*E. Executive Order 13045: Protection of Children from Environmental Health Risks and Safety Risks*

Executive Order 13045 (62 FR 19885, April 23, 1997) applies to any rule that: (1) is determined to be ''economically significant'' as defined under Executive Order 12866; and (2) concerns an environmental health or safety risk that EPA has reason to believe may have a disproportionate effect on children. If the regulatory action meets both criteria, the Agency must evaluate the environmental health or safety effects of the planned rule on children, and explain why the planned regulation is preferable to other potentially effective and reasonably feasible alternatives considered by the Agency.

Today's amendments are not subject to Executive 13045 because they are not economically significant, as defined under Executive Order 12866.

*F. Executive Order 13175: Consultation and Coordination with Indian Tribal Governments*

Executive Order 13175, entitled ''Consultation and Coordination with Indian Tribal Governments'' (65 FR 67249, November 9, 2000), requires EPA to develop an accountable process to ensure ''meaningful and timely input by tribal officials in the development of regulatory policies that have tribal implications.'' ''Policies that have tribal implications'' is defined in the Executive Order to include regulations that have ''substantial direct effects on one or more Indian tribes, on the relationship between the Federal government and the Indian tribes, or on the distribution of power and responsibilities between the Federal Government and Indian tribes.''

This final rule does not have tribal implications. It will not have substantial direct effects on tribal governments, on the relationship between the Federal Government and Indian tribes, or on the distribution of power and responsibilities between the Federal Government and Indian tribes, as specified in Executive Order 13175. This is because the new certification provision is simply an alternative to minimum monitoring requirements codified in 1998 and does not effect any changes with tribal implications. In addition, Indian tribes will not incur any additional substantial direct costs as a result of this action. Thus, Executive Order 13175 does not apply to this rule.

*G. Executive Order 13132: Federalism*

Executive Order 13132, entitled ''Federalism'' (64 FR 43255, August 10, 1999), requires EPA to develop an accountable process to ensure ''meaningful and timely input by State and local officials in the development of regulatory policies that have federalism implications.'' ''Policies that have federalism implications'' is defined in the Executive Order to include regulations that have ''substantial direct effects on the States, on the relationship between the national government and the States, or on the distribution of power and responsibilities among the various levels of government.''

This final rule does not have federalism implications. It will not have substantial direct effects on the States, on the relationship between the national government and the States, or on the distribution of power and responsibilities among the various levels of government, as specified in Executive Order 13132. This is because the new certification provision is simply an alternative to minimum monitoring requirements codified in 1998 and does not effect any changes relevant to federalism. In addition, States will not incur any additional substantial direct costs as a result of this action. Thus, Executive Order 13132 does not apply to this rule.

*H. National Technology Transfer and Advancement Act*

Section 12(d) of the National Technology Transfer and Advancement Act of 1995 (''NTTAA''), Pub. L. 104–113, § 12(d) (15 U.S.C. 272 note) directs EPA to use voluntary consensus standards in its regulatory activities unless to do so would be inconsistent with applicable law or otherwise impractical. Voluntary consensus standards are technical standards (*e.g.*, materials specifications, test methods, sampling procedures, and business practices) that are developed or adopted by voluntary consensus standards bodies. The NTTAA directs EPA to provide Congress, through the Office of Management and Budget, explanations when the Agency decides not to use available and applicable voluntary consensus standards. This action does not involve technical standards. Therefore, EPA did not consider the use of any voluntary consensus standards.

*I. Executive Order 13211: Energy Effects*

This rule is not a ''significant energy action'' as defined in Executive Order 13211, ''Actions Concerning Regulations That Significantly Affect Energy Supply, Distribution, or Use'' (66 FR 28355 (May 22, 2001)) because it is not likely to have a significant adverse effect on the supply, distribution, or use of energy. Further, we have concluded that this rule is not likely to have any adverse energy effects. This rule merely allows the use of a new certification provision as an alternative to the minimum monitoring requirements codified in 1998.

*J. Congressional Review Act*

The Congressional Review Act, 5 U.S.C. Section 801 *et seq.*, as added by the Small Business Regulatory Enforcement Fairness Act of 1996, generally provides that before a rule may take effect, the agency promulgating the rule must submit a rule report, which includes a copy of the rule, to each House of the Congress and to the Comptroller General of the United States. EPA will submit a report containing this rule and other required information to the U.S. Senate, the U.S. House of Representatives, and the Comptroller General of the United States prior to publication of the rule in the **Federal Register**. A major rule cannot take effect until 60 days after it is published in the **Federal Register**. This action is not a major rule as defined by 5 U.S.C. Section 804(2). This rule will be effective October 21, 2002.

**List of Subjects**

*40 CFR Part 9*

Environmental protection, Reporting and recordkeeping requirements.

*40 CFR Part 430*

Environmental protection, Paper and paper products industry, Reporting and recordkeeping requirements, Waste treatment and disposal, Water pollution control.

Dated: September 12, 2002.

**Christine Todd Whitman,**

*Administrator.*

For the reasons set out in the preamble, 40 CFR parts 9 and 430 are amended as follows:

## PART 9—[AMENDED]

1. The authority citation for part 9 continues to read as follows:

**Authority:** 7 U.S.C. 135 *et seq.*, 136–136y; 15 U.S.C. 2001, 2003, 2005, 2006, 2601–2671; 21 U.S.C. 331j, 346a, 348; 31 U.S.C. 9701; 33 U.S.C. 1251 *et seq.*, 1311, 1313d, 1314, 1318, 1321, 1326, 1330, 1342, 1344, 1345 (d) and (e), 1361; E.O. 11735, 38 FR 21243, 3 CFR, 1971–1975 Comp. p. 973; 42 U.S.C. 241, 242b, 243, 246, 300f, 300g, 300g–1, 300g–2, 300g–3, 300g–4, 300g–5, 300g–6, 300j–1, 300j–2, 300j–3, 300j–4, 300j–9, 1857 *et seq.*, 6901–6992k, 7401–7671q, 7542, 9601–9657, 11023, 11048.

2. In § 9.1 the table is amended by adding new entries in numerical order under the indicated heading to read as follows:

**§ 9.1 OMB approvals under the Paperwork Reduction Act.**

* * * * *

| 40 CFR citation | OMB control No. |
|---|---|
| * * * * * | |
| Pulp, Paper, and Paperboard Point Source Category | |
| 430.02(a)–(e) | 2040–0243 |
| 430.02(f) | 2040–0242 |
| * * * * * | |

## PART 430—THE PULP, PAPER, AND PAPERBOARD POINT SOURCE CATEGORY

1. The authority citation for part 430 continues to read as follows:

**Authority:** Secs. 301, 304, 306, 307, 308, 402, and 501 of the Clean Water Act, as amended, (33 U.S.C. 1311, 1314, 1316, 1317, 1318, 1342, and 1361), and section 112 of the Clean Air Act, as amended, (42 U.S.C. 7412).

2. Section 430.02 is amended by adding paragraph (f) to read as follows:

**§ 430.02 Monitoring requirements.**

* * * * *

(f) *Certification in Lieu of Monitoring for Chloroform.* (1) *Under what circumstances may a discharger be exempt from the minimum monitoring requirements of this section for chloroform?* A discharger subject to limitations or standards for chloroform under subpart B of this part is not subject to the minimum monitoring requirements specified in this section for chloroform at a fiber line to which the limitations or standards apply if the discharger meets the requirements of this section.

(2) *How do I qualify for the exemption?* At the time you request an exemption from the minimum monitoring requirements of this section for chloroform from your permitting authority or pretreatment control authority for a fiber line, you must:

(i) Demonstrate, based on 104 measurements taken over a period of not less than two years of monitoring conducted in accordance with paragraph (a) of this section, that you are complying with the applicable limitations or standards for chloroform;

(ii) Certify that you will maintain a record of the maximum value for each of the following process and operating conditions for the fiber line that was recorded during the collection of each of the samples used to make the demonstration required under paragraph (f)(2)(i) of this section.

(A) The pH of the first chlorine dioxide bleaching stage;

(B) The chlorine ($Cl_2$) content of chlorine dioxide ($ClO_2$) used on the bleach line;

(C) The kappa factor of the first chlorine dioxide bleaching stage; and

(D) The total bleach line chlorine dioxide application rate;

(iii) Identify the chlorine-containing compound used for bleaching during the collection of samples used to make the demonstration required under paragraph (f)(2)(i) of this section; and

(iv) Certify that the fiber line does not use either elemental chlorine or hypochlorite as bleaching agents.

(3) *What happens if I change the process and operating conditions on the fiber line so that one or more exceeds the maximum value recorded under paragraph (f)(2)(ii) of this section for that process and operating condition?* If you wish to continue your exemption from the minimum monitoring requirements of this section for chloroform, you must:

(i) Demonstrate, based on monitoring conducted at a frequency similar to that required in paragraph (a) of this section and for a duration determined by the permitting or pretreatment control authority, that you are complying with the applicable limitations or standards for chloroform;

(ii) Certify that you will maintain a record of the maximum value for each of the following process and operating conditions for the fiber line that was recorded during the collection of each of the samples used to make the demonstration required under paragraph (f)(6)(i) of this section:

(A) The pH of the first chlorine dioxide bleaching stage;

(B) The chlorine ($Cl_2$) content of chlorine dioxide ($ClO_2$) used on the bleach line;

(C) The kappa factor of the first chlorine dioxide bleaching stage; and

(D) The total bleach line chlorine dioxide application rate;

(iii) Identify the chlorine-containing compound used for bleaching during the collection of each sample used to make the demonstration required under paragraph (f)(3)(i) of this section; and

(iv) Certify that the fiber line does not use either elemental chlorine or hypochlorite as bleaching agents.

(4) *What are my reporting obligations?* You must certify in reports required under § 122.41(l)(4) or § 403.12(b) of this chapter, as appropriate, that the chlorine-containing compounds used for bleaching are unchanged from those identified under paragraph (f)(2)(iii) of this section and that the following process and operating conditions maintained on the fiber line during the reporting period have not exceeded the maximum value recorded for each such condition during the collection of the samples used to make the demonstration required under paragraphs (f)(2)(i) or (f)(3)(i) of this section:

(i) The pH of the first chlorine dioxide bleaching stage;

(ii) The chlorine ($Cl_2$) content of chlorine dioxide ($ClO_2$) used on the bleach line;

(iii) The kappa factor of the first chlorine dioxide bleaching stage; and

(iv) The total bleach line chlorine dioxide application rate.

(5) *What happens if I fail to maintain the records described in paragraphs (f)(2)(ii) and (f)(3)(ii) of this section?* You will be required to comply with the minimum monitoring requirements of this section for chloroform.

(6) *What happens if I exceed the maximum value recorded under paragraphs (f)(2)(ii) or (f)(3)(ii) of this section for any of the process and operating conditions identified in that section?*

(i) If for any reason (*e.g.*, intentionally or due to process upset) you fail to maintain process and operating conditions at values equal to or less than the maximum value recorded under paragraphs (f)(2)(ii) or (f)(3)(ii) of this section for each such condition, you will be in violation of the applicable chloroform limitation or standard unless:

(A) Within 30 days, you notify your permitting or pretreatment control authority in writing of the exceedance; and

(B) You demonstrate compliance with the applicable chloroform limitation or standard by immediately monitoring the bleach plant effluent for chloroform at a frequency similar to that required in paragraph (a) of this section and for a duration determined by the permit or pretreatment control authority.

(ii) In order to continue your exemption from the minimum monitoring requirements of this section for chloroform, you must meet the requirements of paragraph (f)(6)(i) of this section and you must recertify that the fiber line process and operating conditions do not exceed the maximum value recorded under paragraphs (f)(2)(ii) or (f)(3)(ii) of this section for each of the parameters identified in those paragraphs.

(7) *Definitions:*

(i) *Kappa factor*—the ratio of available chlorine (total equivalent chlorine, as percent on oven dry pulp) to the kappa number of the pulp. Kappa number is the lignin content of pulp, as measured

by a modified permanganate test corrected to 50 percent consumption of the chemical.

(ii) *Total bleach line chlorine dioxide application rate*—mass of chlorine dioxide applied in all stages of the bleach line per mass of unbleached pulp (*i.e.*, lb/ton or kg/kkg).

(iii) *Chlorine-containing compounds*—compounds containing chlorine used in the bleach plant for bleaching, brightening, whitening, or viscosity control. These compounds include but are not limited to chlorine ($Cl_2$), sodium hypochlorite (NaOCl), chlorine dioxide ($ClO_2$) and chlorine monoxide ($Cl_2O$).

[FR Doc. 02–23741 Filed 9–18–02; 8:45 am]

BILLING CODE 6560–50–P

## ENVIRONMENTAL PROTECTION AGENCY

### 40 CFR Parts 52 and 60

**[SIP NO. UT–001–0043a, UT–001–44a; FRL–7376–7]**

### Approval and Promulgation of Air Quality Implementation Plans; Utah; New Source Performance Standards

**AGENCY:** Environmental Protection Agency (EPA).

**ACTION:** Direct final rule and announcement of Utah NSPS Delegation.

**SUMMARY:** On January 8, 1999 and December 10, 1999, the Governor of Utah submitted revisions to the New Source Performance Standards (NSPS) rules in Utah's Air Conservation Regulations. We are announcing that on June 10, 2002 we delegated the authority for the implementation and enforcement of the NSPS to the State.

Given that the State has been delegated the authority for implementation and enforcement of the NSPS, we are removing the NSPS rules from the Utah SIP. In addition, we are approving updates to the NSPS ''Delegation Status of New Source Performance Standards'' table. These actions are being taken under sections 110 and 111 of the Clean Air Act.

**DATES:** This rule is effective on November 18, 2002, without further notice, unless EPA receives adverse comment by October 21, 2002. If adverse comment is received, EPA will publish a timely withdrawal of the direct final rule in the **Federal Register** informing the public that the rule will not take effect.

**ADDRESSES:** Written comments may be mailed to Richard R. Long, Director, Air and Radiation Program, Mailcode 8P–AR, Environmental Protection Agency (EPA), Region 8, 999 18th Street, Suite 300, Denver, Colorado 80202. Copies of the documents relevant to this action are available for public inspection during normal business hours at the Air and Radiation Program, Environmental Protection Agency, Region 8, 999 18th Street, Suite 300, Denver, Colorado 80202. Copies of the State documents relevant to this action are available for public inspection at the Utah Department of Environmental Quality, Division of Air Quality, 150 North 1950 West, Salt Lake City, Utah 84114.

**FOR FURTHER INFORMATION CONTACT:** Laurel Dygowski, EPA, Region 8, (303) 312–6144.

**SUPPLEMENTARY INFORMATION:** Throughout this document, wherever ''we'' or ''our'' is used means EPA.

## I. Summary of SIP Revisions

### *A. January 8, 1999 and December 10, 1999 Submittals*

The January 8, 1999 and December 10, 1999 submittals revise UACR R–307–18 (since renumbered as R307–210) by updating the incorporation by reference for new source performance standards (NSPS) to reflect updated versions of the federal regulations. UACR R307–18 is the rule the State uses to implement our NSPS.

On June 10, 2002, we issued a letter delegating responsibility for all sources located, or to be located, in the State of Utah subject to the NSPS in 40 CFR part 60. The categories of new stationary sources covered by this delegation are as follows: NSPS in effect as of July 1, 1998; NSPS subparts Da and Db, promulgated September 16, 1998; NSPS subparts A, D, Da, Db, Dc, Ea, J, CC, NN, XX, AAA and SSS, promulgated February 12, 1999; NSPS subpart WWW, promulgated February 24, 1999; and NSPS subparts AA and AAa, promulgated March 2, 1999.

Since the State now has been delegated authority for NSPS in 40 CFR part 60, pursuant to 110(k)(6) of the Act, we are removing UACR R307–18 from the SIP. Also, we are updating the table in 40 CFR 60.4(c) to indicate that the 40 CFR part 60 NSPS are now delegated to the State and adding entries for newly delegated NSPS subparts.

The June 10, 2002 letter of delegation to the State follows:

Ref: 8P–AR
Honorable Mike Leavitt,
*Governor of Utah, State Capitol, Salt Lake City, Utah 84113.*

Dear Governor Leavitt: On January 8, 1999 and December 10, 1999 the State submitted revisions to the New Source Performance Standards (NSPS) rules in Utah's Air Conservation Regulations (UACR) R307–18–1 (Re-numbered to 307–210–1). Specifically, the State revised its NSPS to incorporate the Federal NSPS in effect as of July 1, 1998. In addition, the State revised its NSPS to incorporate revisions to the following Subparts of 40 CFR part 60: Da and Db, promulgated September 16, 1998 (63 FR 49442); A, D, Da, Db, Dc, Ea, J, CC, NN, XX, AAA and SSS, promulgated February 12, 1999 (64 FR 7458) [1] WWW, promulgated February 24, 1999 (64 FR 9258) [2] and AA and AAa, promulgated March 2, 1999 (64 FR 10105).

Subsequent to States adopting NSPS regulations, EPA delegates the authority for the implementation and enforcement of those NSPS, so long as the State's regulations are equivalent to the Federal regulations. EPA reviewed the pertinent statutes and regulations of the State of Utah and determined that they provide an adequate and effective procedure for the implementation and enforcement of the NSPS by the State of Utah. Therefore, pursuant to section 111(c) of the Clean Air Act (Act), as amended, and 40 CFR part 60, EPA hereby delegates its authority for the implementation and enforcement of the NSPS to the State of Utah as follows:

(A) Responsibility for all sources located, or to be located, in the State of Utah subject to the standards of performance for new stationary sources promulgated in 40 CFR part 60. The categories of new stationary sources covered by this delegation are all NSPS subparts in 40 CFR part 60, as in effect on July 1, 1998 and revisions to Subparts Da and Db, promulgated September 16, 1998 (63 FR 49442); A, D, Da, Db, Dc, Ea, J, CC, NN, XX, AAA and SSS, promulgated February 12, 1999 (64 FR 7458); WWW, promulgated February 24, 1999 (64 FR 9258); and AA and AAa, promulgated March 2, 1999 (64 FR 10105). Note this delegation does not include the emission guidelines in subparts Cb, Cc, Cd, and Ce. These subparts require state plans which are approved under a separate process pursuant to section 111(d) of the Act.

(B) Not all authorities of NSPS can be delegated to States under section 111(c) of the Act, as amended. The EPA Administrator retains authority to implement those sections of the NSPS that require: (1) Approving equivalency determinations and alternative test methods, (2) decision making to ensure national consistency, and (3) EPA rulemaking to implement. Therefore, of the NSPS of 40 CFR part 60 being delegated in this letter, the enclosure lists examples of sections in 40 CFR part 60 that cannot be delegated to the State of Utah.

(C) As 40 CFR part 60 is updated, Utah should revise its regulations accordingly and

[1] It appears that Utah has cited the incorrect legal citation. The State cites the title page of the **Federal Register** notice. The Utah citation 64 FR 7457 should be 64 FR 7458. If we are interpreting this incorrectly, we ask that the State notify us immediately.

[2] It appears that Utah has cited the incorrect legal citation. The State cites the title page of the **Federal Register** notice. The Utah citation 64 FR 9257 should be 64 FR 9258. If we are interpreting this incorrectly, we ask that the State notify us immediately.

in a timely manner and submit to EPA requests for updates to its delegation of authority.

This delegation is based upon and is a continuation of the same conditions as those stated in EPA's original delegation letter of May 13, 1976 to the Honorable Calvin L. Rampton, then Governor of Utah, except that condition 3, relating to Federal facilities, was voided by the Clean Air Act Amendments of 1977. Please also note that EPA retains concurrent enforcement authority as stated in condition 2. In addition, if at any time there is a conflict between a State and Federal NSPS regulation, the Federal regulation must be applied if it is more stringent than that of the State, as stated in condition 10. EPA published its May 13, 1976 delegation letter in the notices section of the June 15, 1976 **Federal Register** (41 FR 24215), along with an associated rulemaking notifying the public that certain reports and applications required from operators of new or modified sources shall be submitted to the State of Utah (41 FR 24124). Copies of the **Federal Register** notices are enclosed for your convenience.

EPA is approving Utah's request for NSPS delegation for all areas within the State except for the following: lands within the exterior boundaries of the Skull Valley, Paiute, Navajo, Goshute, White Mesa, and Northwestern Shoshoni Indian Reservations; Indian country lands within the Uintah and Ouray Indian Reservation; and any other areas which are ''Indian Country'' within the meaning of 18 U.S.C. 1151.

Since this delegation is effective immediately, there is no need for the State to notify the EPA of its acceptance. Unless we receive written notice of objections from you within ten days of the date on which you receive this letter, the State of Utah will be deemed to accept all the terms of this delegation. EPA will publish an information notice in the **Federal Register** in the near future to inform the public of this delegation, in which this letter will appear in its entirety.

If you have any questions on this matter, please contact me or have your staff contact Richard Long, Director of our Air and Radiation Program, at (303) 312–6005.

Sincerely yours,
Robert E. Roberts,
*Regional Administrator.*

Enclosures.
cc: Rick Sprott, Director, Division of Air Quality, Dianne Nielson, Executive Director, Department of Environmental Quality.

Enclosure to Letter Delegating NSPS in 40 CFR Part 60, Effective Through May 3, 1999, to the State of Utah

EXAMPLES OF AUTHORITIES IN 40 CFR PART 60 WHICH CANNOT BE DELEGATED

| 40 CFR subparts | Section(s) |
|---|---|
| A | 60.8(b)(2) and (b)(3), and those sections throughout the standards that reference 60.8(b)(2) and (b)(3); 60.11(b) and 60.11(e)(6), (7), and (8). |
| Da | 60.45a. |

EXAMPLES OF AUTHORITIES IN 40 CFR PART 60 WHICH CANNOT BE DELEGATED—Continued

| 40 CFR subparts | Section(s) |
|---|---|
| Db | 60.44b(f), 60.44b(g) and 60.49b(a)(4). |
| Dc | 60.48c(a)(4). |
| Ec | 60.56c(i), 60.8 |
| J | 60.105(a)(13)(iii) and 60.106(i)(12). |
| Ka | 60.114a. |
| Kb | 60.111b(f)(4), 60.114b, 60.116b(e)(3)(iii), 60.116b(e)(3)(iv), and 60.116b(f)(2)(iii). |
| O | 60.153(e). |
| S | 60.194(d). |
| DD | 60.302(d)(3). |
| GG | 60.332(a)(3) and 60.335(f)(1). |
| VV | 60.482–1(c)(2) and 60.484. |
| WW | 60.493(b)(2)(i)(A) and 60.496(a)(1). |
| XX | 60.502(e)(6) |
| AAA | 60.531, 60.533, 60.534, 60.535, 60.536(i)(2), 60.537, 60.538(e) and 60.539. |
| BBB | 60.543(c)(2)(ii)(B). |
| DDD | 60.562–2(c). |
| GGG | 60.592(c). |
| III | 60.613(e). |
| JJJ | 60.623. |
| KKK | 60.634. |
| NNN | 60.663(e). |
| QQQ | 60.694. |
| RRR | 60.703(e). |
| SSS | 60.711(a)(16), 60.713(b)(1)(i) and (ii), 60.713(b)(5)(i), 60.713(d), 60.715(a) and 60.716. |
| TTT | 60.723(b)(1), 60.723(b)(2)(i)(C), 60.723(b)(2)(iv), 60.724(e) and 60.725(b). |
| VVV | 60.743(a)(3)(v)(A) and (B), 60.743(e), 60.745(a) and 60.746. |
| WW W | 60.754(a)(5). |

## II. Final Action

We are announcing the delegation of authority to the State for NSPS implementation and enforcement. We are removing UCAR R307–18 from the SIP and are updating the table in 40 CFR 60.4(c) to indicate that the 40 CFR part 60 NSPS is now delegated to the State and adding entries for newly delegated NSPS subparts.

Section 110(l) of the Clean Air Act states that a SIP revision cannot be approved if the revision would interfere with any applicable requirement concerning attainment and reasonable further progress towards attainment of the NAAQS or any other applicable requirements of the Act. The Utah SIP revisions that are the subject of this document do not interfere with the maintenance of the NAAQS or any other applicable requirement of the Act because the State continues to have the authority for the implementation and enforcement of the NSPS in Utah.

EPA is publishing this rule without prior proposal because the Agency views this as a noncontroversial amendment and anticipates no adverse comments. However, in the ''Proposed Rules'' section of today's **Federal Register** publication, EPA is publishing a separate document that will serve as the proposal to approve the SIP revision if adverse comments be filed. This rule will be effective November 18, 2002, without further notice unless the Agency receives adverse comments by October 21, 2002. If the EPA receives adverse comments, EPA will publish a timely withdrawal in the **Federal Register** informing the public that the rule will not take effect. EPA will address all public comments in a subsequent final rule based on the proposed rule. The EPA will not institute a second comment period on this action. Any parties interested in commenting must do so at this time. Please note that if EPA receives adverse comment on an amendment, paragraph, or section of this rule and if that provision may be severed from the remainder of the rule, EPA may adopt as final those provisions of the rule that are not the subject of an adverse comment.

## III. Administrative Requirements

Under Executive Order 12866 (58 FR 51735, October 4, 1993), this action is not a ''significant regulatory action'' and therefore is not subject to review by the Office of Management and Budget. For this reason, this action is also not subject to Executive Order 13211, ''Actions Concerning Regulations That Significantly Affect Energy Supply, Distribution, or Use'' (66 FR 28355, May 22, 2001). This action merely approves state law as meeting Federal requirements and imposes no additional requirements beyond those imposed by state law. Accordingly, the Administrator certifies that this rule will not have a significant economic impact on a substantial number of small entities under the Regulatory Flexibility Act (5 U.S.C. 601 *et seq.*). Because this rule approves pre-existing requirements under state law and does not impose any additional enforceable duty beyond that required by state law, it does not contain any unfunded mandate or significantly or uniquely affect small governments, as described in the Unfunded Mandates Reform Act of 1995 (Public Law 104–4).

This rule also does not have tribal implications because it will not have a substantial direct effect on one or more Indian tribes, on the relationship

between the Federal Government and Indian tribes, or on the distribution of power and responsibilities between the Federal Government and Indian tribes, as specified by Executive Order 13175 (65 FR 67249, November 9, 2000). This action also does not have Federalism implications because it does not have substantial direct effects on the States, on the relationship between the national government and the States, or on the distribution of power and responsibilities among the various levels of government, as specified in Executive Order 13132 (64 FR 43255, August 10, 1999). This action merely approves a state rule implementing a Federal standard, and does not alter the relationship or the distribution of power and responsibilities established in the Clean Air Act. This rule also is not subject to Executive Order 13045 ''Protection of Children from Environmental Health Risks and Safety Risks'' (62 FR 19885, April 23, 1997), because it is not economically significant.

In reviewing SIP submissions, EPA's role is to approve state choices, provided that they meet the criteria of the Clean Air Act. In this context, in the absence of a prior existing requirement for the State to use voluntary consensus standards (VCS), EPA has no authority to disapprove a SIP submission for failure to use VCS. It would thus be inconsistent with applicable law for EPA, when it reviews a SIP submission, to use VCS in place of a SIP submission that otherwise satisfies the provisions of the Clean Air Act. Thus, the requirements of section 12(d) of the National Technology Transfer and Advancement Act of 1995 (15 U.S.C. 272 note) do not apply. This rule does not impose an information collection burden under the provisions of the Paperwork Reduction Act of 1995 (44 U.S.C. 3501 *et seq.*).

The Congressional Review Act, 5 U.S.C. 801 *et seq.*, as added by the Small Business Regulatory Enforcement Fairness Act of 1996, generally provides that before a rule may take effect, the agency promulgating the rule must submit a rule report, which includes a copy of the rule, to each House of the Congress and to the Comptroller General of the United States. EPA will submit a report containing this rule and other required information to the U.S. Senate, the U.S. House of Representatives, and the Comptroller General of the United States prior to publication of the rule in the **Federal Register**. A major rule cannot take effect until 60 days after it is published in the **Federal Register**. This action is not a ''major rule'' as defined by 5 U.S.C. 804(2).

Under section 307(b)(1) of the Clean Air Act, petitions for judicial review of this action must be filed in the United States Court of Appeals for the appropriate circuit by November 18, 2002. Filing a petition for reconsideration by the Administrator of this final rule does not affect the finality of this rule for the purposes of judicial review nor does it extend the time within which a petition for judicial review may be filed, and shall not postpone the effectiveness of such rule or action. This action may not be challenged later in proceedings to enforce its requirements. (*See* section 307(b)(2).)

**List of Subjects**

*40 CFR Part 52*

Environmental protection, Air pollution control, Carbon monoxide, Intergovernmental relations, Lead, Nitrogen dioxide, Ozone, Particulate matter, Reporting and recordkeeping requirements, Sulfur oxides, Volatile organic compounds.

*40 CFR Part 60*

Air pollution control, Aluminum, Ammonium sulfate plants, Beverages, Carbon monoxide, Cement industry, Coal, Copper, Dry cleaners, Electric power plants, Fertilizers, Fluoride, Gasoline, Glass and glass products, Graphic arts industry, Household appliances, Insulation, Intergovernmental relations, Iron, Lead, Lime, Metallic and nonmetallic mineral processing plants, Metals, Motor vehicles, Natural gas, Nitric acid plants, Nitrogen dioxide, Paper and paper products industry, Particulate matter, Paving and roofing materials, Petroleum, Phosphate, Plastics materials and synthetics, Reporting and recordkeeping requirements, Sewage disposal, Steel, Sulfur oxides, Tires, Urethane, Vinyl, Waste treatment and disposal, Zinc.

Dated: August 27, 2002.

**Jack W. McGraw,**

*Acting Regional Administrator, Region 8.*

40 CFR part 52, of chapter I, title 40 is amended as follows:

## PART 52—[AMENDED]

1. The authority citation for Part 52 continues to read as follows:

**Authority:** 42 U.S.C. 7401 et seq.

## Subpart TT—Utah

2. Section 52.2352 is added to read as follows:

### § 52.2352 Change to approved plan.

Utah Air Conservation Regulation R307–18–1, New Source Performance Standards, is removed from the approved plan. On June 10, 2002, we issued a letter delegating responsibility for all sources located, or to be located, in the State of Utah subject to the NSPS in 40 CFR part 60. See the table in 40 CFR 60.4 for the status of NSPS delegated to the state of Utah.

## PART 60—[AMENDED]

1. The authority citation for part 60 continues to read as follows:

**Authority:** 42 U.S.C. 7401, 7411, 7414, 7416, and 7601 as amended by the Clean Air Act Amendments of 1990, Pub. L. 101–549, 104 Stat. 2399 (November 15, 1990; 402, 409, 415 of the Clean Air Act as amended, 104 Stat. 2399, unless otherwise noted).

## Subpart A—General Provisions

2. In § 60.4, amend the table entitled ''Delegation Status of New Source Performance Standards [(NSPS) for Region VIII]'' in paragraph (c) by revising the column heading for ''UT'' and the entries for subpart ''Eb'' and ''Ec'' to read as follows:

### § 60.4 Addresses.

* * * * *

(c) * * *

DELEGATION STATUS OF NEW SOURCE PERFORMANCE STANDARDS [(NSPS) FOR REGION VIII]

| Subpart | CO | MT | ND | SD[1] | UT | WY |
|---|---|---|---|---|---|---|
| * * * * | * | | * | | * | |
| * * * * | * | | * | | * | |
| Eb-Large Municipal Waste Combustors | | | | (*) | (*) | (*) |
| Ec-Hospital/Medical/Infectious Waste Incinerators | (*) | | (*) | (*) | (*) | |

DELEGATION STATUS OF NEW SOURCE PERFORMANCE STANDARDS [(NSPS) FOR REGION VIII]—Continued

| Subpart | CO | MT | ND | SD[1] | UT | WY |
|---|---|---|---|---|---|---|
| * * * * | * | | * | | * | |

(*) Indicates approval of State regulation.
[1] Indicates approval of State Regulation as part of the State Implementation Plan (SIP).

* * * * *

[FR Doc. 02–23378 Filed 9–18–02; 8:45 am]

BILLING CODE 6560–50–P

## ENVIRONMENTAL PROTECTION AGENCY

## 40 CFR Part 63

**[FRL–7378–4]**

## Approval of Section 112(l) Authority for Hazardous Air Pollutants; Delegation of Section 111 and Section 112 Standards; State of New Hampshire

**AGENCY:** Environmental Protection Agency (EPA).

**ACTION:** Direct final rule; delegation of authority.

**SUMMARY:** EPA is taking direct final action to approve New Hampshire Department of Environmental Services' (NH DES) request for delegation of authority to implement and enforce its New Source Performance Standards (NSPSs) and National Emission Standards for Hazardous Air Pollutants (NESHAPs) which have been adopted by reference into New Hampshire's state regulations from the Federal requirements set forth in the Code of Federal Regulations. In addition, EPA is taking direct final action to approve NH DES's mechanism for receiving delegation of future NESHAPs and NSPSs. This approval delegates standards for both major and area sources and will automatically delegate future regulations and amendments to regulations once NH DES incorporates these regulations and amendments into its regulations. EPA is taking this action in accordance with the Clean Air Act (CAA).

**DATES:** This rule is effective on November 18, 2002, without further notice, unless EPA receives adverse comments by October 21, 2002. If EPA receives such comment, then it will publish a timely withdrawal in the **Federal Register** informing the public that this rule will not take effect.

**ADDRESSES:** Written comments must be submitted to Steven Rapp, Manager, Air Permits, Toxics and Indoor Programs Unit, Office of Ecosystem Protection (mail code CAP) at the EPA New England office listed below and to Barbara L. Hoffman, Stationary Source Planning Manager, at the New Hampshire Department of Environmental Services office listed below. Copies of NH DES's request for approval are available for public inspection at the following locations:

U.S. Environmental Protection Agency, EPA-New England, Office of Ecosystem Protection, One Congress Street, Suite 1100, Boston, MA 02114–2023.

New Hampshire Department of Environmental Services, Air Resources Division, 6 Hazen Drive, Concord, NH 03302–0095.

**FOR FURTHER INFORMATION CONTACT:** Susan Lancey, Office of Ecosystem Protection, U.S. Environmental Protection Agency, EPA-New England, One Congress Street, Suite 1100 (CAP), Boston, MA 02114–2023, Telephone: (617) 918–1656.

**SUPPLEMENTARY INFORMATION:**

### Outline

I. Background
II. Has EPA Previously Delegated NSPS and NESHAP Standards to New Hampshire?
III. What Is NH DES Now Requesting?
IV. What Criteria Must NH's Program Meet To Be Approved?
V. Which Part 63 General Provisions Did NH DES Request Delegation for?
VI. What Action Is EPA Taking?
VII. Administrative Requirements

### I. Background

Under section 112(l) of the CAA, EPA may delegate Federal section 112 rules without changes to states or approve state programs in lieu of the Federal section 112 rules. The Federal regulations governing EPA's approval of state and local rules or programs under section 112(l) are located at 40 CFR part 63, subpart E (*See* 65 FR 55810, dated September 14, 2000). Under these rules, EPA may approve state programs to implement and enforce the Federal section 112 rules without changes. This is referred to as straight delegation. In addition, EPA may approve state requests for one-time approval of their mechanism for taking delegation of future unchanged Federal section 112 rules, emission standards and requirements. To receive EPA approval for straight delegation, the requirements of 40 CFR 63.91 must be met.

### II. Has EPA Previously Delegated NSPS and NESHAP Standards to New Hamsphire?

NH DES has been delegated the authority by EPA to implement and enforce certain NSPS codified at 40 CFR part 60, certain NESHAPs codified at 40 CFR part 61, and certain NESHAP referred to as Maximum Achievable Control Technology (MACT) standards codified at 40 part CFR 63. This delegation of authority was approved by EPA in the **Federal Register** on August 14, 1996 (*See* 61 FR 42222). This delegation extended only to facilities subject to New Hampshire's title V permit program and applied to existing standards. Under this delegation mechanism, delegation occurred upon incorporation of the MACT standard into the source's title V operating permit. In the August 14, 1996 **Federal Register**, EPA also proposed to approve this delegation mechanism for delegation of future standards. On October 2, 1996 (*See* 61 FR 51370), EPA approved this delegation mechanism.

### III. What Is NH DES Now Requesting?

On May 9, 2002, the NH DES submitted a request to EPA to receive straight delegation of authority to implement and enforce the NESHAP and NSPS [1] regulations for both major and area sources under a new delegation mechanism. NH DES is now requesting to take delegation of these standards by incorporating these standards into NH DES's regulations. On April 5, 2002, DES adopted a rule, Env-500, that incorporates by reference NSPS and NESHAP regulations as set forth in the Code of Federal Regulations as of July 1, 2001. In addition, NH DES incorporated 40 CFR part 63 subpart D, Regulations Governing Compliance Extensions for Early Reductions of Hazardous Air Pollutants. NH DES has incorporated all NSPS and NESHAP regulations as indicated in Table 1 and requested delegation of these standards. NH DES did not incorporate 40 CFR part 63, subpart M—national perchloroethylene air emission standards for dry cleaning facilities. NH DES intends to continue implementing and enforcing this standard only for

[1] Please note Federal rulemaking is not required for delegation of section 111 standards.

facilities subject to the title V permit program, consistent with EPA's previous delegation of that standard to DES on August 14, 1996. NH DES also did not incorporate certain standards where the state has no applicable sources. For example, New Hampshire does not have any coke ovens or magnetic tape manufacturers. Therefore, NH DES did not incorporate subpart L, the national emission standard for hazardous air pollutants for coke oven batteries nor subpart EE, the national emission standard for hazardous air pollutants for magnetic tape manufacturing operations. In addition, NH DES has incorporated by reference 40 CFR 61, subpart M—national emission standards for asbestos, with the exception of 40 CFR 61.151, standard for inactive waste disposal sites for asbestos mills and manufacturing and fabricating operations. On June 28, 2002, NH DES submitted a partial rule substitution request to EPA pursuant to 40 CFR 63.93 for a portion of that rule and is therefore not requesting straight delegation of section 61.151. Please refer to Table 1 for a complete list of the standards that NH DES is requesting delegation for as set forth in the Code of Federal Regulations as of July 1, 2001.

In addition, NH DES requested that EPA approve NH DES's delegation mechanism for delegation of all future standards. NH DES's delegation mechanism is to incorporate all new or revised standards by reference and to receive future delegation upon adoption by NH DES of the new or revised standards. The details of this delegation mechanism are set forth in Attachment 2 to the NH DES delegation request letter dated May 9, 2002.

## IV. What Criteria Must NH's Program Meet To Be Approved?

Section 112(l)(5) of the Act requires that a state's NESHAP program contain adequate authorities, adequate resources for implementation, and an expeditious compliance schedule. These are also requirements for an adequate operating permits program under 40 CFR part 70. On September 24, 2001, EPA promulgated full approval of the State's operating permits program as administered by NH DES. (*See* 66 FR 48806) In addition, on May 16, 2001, EPA has already provided ''up-front'' approval of the NH DES NESHAP program in accordance with 40 CFR section 63.91(d). (See 66 FR 27032) Under section 63.91(d)(2), once a state has satisfied up-front approval criteria, it needs only to reference the previous demonstration and reaffirm that it still meets the criteria for any subsequent submittals. NH DES has affirmed that it still meets the up-front approval criteria.

## V. Which Part 63 General Provisions Did NH DES Request Delegation for?

Under section 63.91(g), EPA has identified which part 63 general provisions may be delegated to state/local/tribal (S/L/T) agencies and which general provisions must be retained by EPA. NH DES has incorporated part 63 subpart A in its entirety but has requested that EPA delegate only the delegable authorities of the part 63 general provisions as identified in section 63.91(g)(i). The delegable authorities include the following:

(A) Section 63.1, Applicability Determinations
(B) Section 63.6(e), Operation and Maintenance Requirements—Responsibility for Determining Compliance
(C) Section 63.6(f), Compliance with Non-Opacity Standards—Responsibility for Determining Compliance
(D) Section 63.6(h), Compliance with Opacity and Visible Emissions Standards—Responsibility for Determining Compliance
(E) Sections 63.7(c)(2)(i) and (d), Approval of Site-Specific Test Plans
(F) Section 63.7(e)(2)(i), Approval of Minor Alternatives to Test Methods
(G) Section 63.7(e)(2)(ii) and (f), Approval of Intermediate Alternatives to Test Methods
(H) Section 63.7(e)(iii), Approval of Shorter Sampling Times and Volumes When Necessitated by Process Variables or Other Factors
(I) Sections 63.7(e)(2)(iv), (h)(2), and (h)(3), Waiver of Performance Testing
(J) Sections 63.8(c)(1) and (e)(1), Approval of Site-Specific Performance Evaluation (Monitoring) Test Plans
(K) Section 63.8(f), Approval of Minor Alternatives to Monitoring
(L) Section 63.8(f), Approval of Intermediate Alternatives to Monitoring
(M) Sections 63.9 and 63.10, Approval of Adjustments to Time Periods for Submitting Reports
(N) Section 63.10(f), Approval of Minor Alternatives to Recordkeeping and Reporting

## VI. What Action Is EPA Taking?

EPA has determined that NH DES has satisfied the approval criteria of 40 CFR 63.91(d). EPA is approving NH DES's delegation of the NSPS, NESHAP and MACT standards indicated in Table 1. EPA is also approving delegation of all delegable authorities of the part 63 general provisions identified in section 63.91(g)(1) and section V above. In addition, EPA is approving NH DES's delegation mechanism for delegation of all future standards according to the delegation procedures identified in Attachment 2 of the delegation request letter dated May 9, 2002 from NH DES to EPA. The NH DES has the primary authority and responsibility to carry out all elements of these programs for all sources covered in New Hampshire, including on-site inspections, record keeping reviews, and enforcement.

## VII. Administrative Requirements

### *A. Executive Order 12866*

The Office of Management and Budget has exempted this regulatory action from Executive Order 12866, entitled ''Regulatory Planning and Review.'' This rule is not subject to Executive Order 13045, entitled, ''Protection of Children from Environmental Health Risks and Safety Risks,'' because it is not an ''economically significant'' action under Executive Order 12866.

### *B. Executive Order 13175*

Executive Order 13175, entitled ''Consultation and Coordination with Indian Tribal Governments'' (65 FR 67249, November 6, 2000), requires EPA to develop an accountable process to ensure ''meaningful and timely input by tribal officials in the development of regulatory policies that have tribal implications.'' ''Policies that have tribal implications'' is defined in the Executive Order to include regulations that have ''substantial direct effects on one or more Indian tribes, on the relationship between the Federal government and the Indian tribes, or on the distribution of power and responsibilities between the Federal government and Indian tribes.''

This final rule does not have tribal implications. It will not have substantial direct effects on tribal governments, on the relationship between the Federal government and Indian tribes, or on the distribution of power and responsibilities between the Federal government and Indian tribes, as specified in Executive Order 13175. This Federal action allows the State of New Hampshire to implement and enforce existing and future requirements under Federal law and does not have tribal implications. Thus, Executive Order 13175 does not apply to this rule.

### *C. Executive Order 13132*

Executive Order 13132, entitled ''Federalism'' (64 FR 43255, August 10, 1999), requires EPA to develop an accountable process to ensure ''meaningful and timely input by State and local officials in the development of

regulatory policies that have federalism implications.'' ''Policies that have federalism implications'' is defined in the Executive Order to include regulations that have ''substantial direct effects on the States, on the relationship between the national government and the States, or on the distribution of power and responsibilities among the various levels of government.''

This final rule does not have federalism implications. It will not have substantial direct effects on the States, on the relationship between the national government and the States, or on the distribution of power and responsibilities among the various levels of government, as specified in Executive Order 13132. This action simply allows New Hampshire to implement and enforce existing and future Federal standards, and does not alter the relationship or the distribution of power and responsibilities established in the Clean Air Act. Thus, Executive Order 13132 does not apply to this rule.

*D. Executive Order 13211 (Energy Effects)*

This rule is not subject to Executive Order 13211, ''Actions Concerning Regulations That Significantly Affect Energy Supply, Distribution, or Use'' (66 FR 28355 (May 22, 2001)) because it is not a significant regulatory action under Executive Order 12866.

*E. Regulatory Flexibility Act*

The Regulatory Flexibility Act (RFA), as amended by the Small Business Regulatory Enforcement Fairness Act of 1996 (SBREFA), 5 U.S.C. 601 *et seq.* generally requires an agency to prepare a regulatory flexibility analysis of any rule subject to notice and comment rulemaking requirements under the Administrative Procedure Act or any other statute unless the agency certifies that the rule will not have a significant economic impact on a substantial number of small entities. Small entities include small businesses, small not-for-profit enterprises, and small governmental entities with jurisdiction over populations of less than 50,000. This final rule will not have a significant impact on a substantial number of small entities because approvals under 40 CFR 63.91 do not create any new requirements but simply allows the state to implement and enforce Federal requirements that the EPA is already imposing. Therefore, because this approval does not create any new requirements, I certify that this action will not have a significant economic impact on a substantial number of small entities.

*F. Unfunded Mandates*

Under section 202 of the Unfunded Mandates Reform Act of 1995 (''Unfunded Mandates Act''), signed into law on March 22, 1995, EPA must prepare a budgetary impact statement to accompany any proposed or final rule that includes a Federal mandate that may result in estimated annual costs to state, local, or tribal governments in the aggregate, or to the private sector, of $100 million or more. Under section 205, EPA must select the most cost-effective and least burdensome alternative that achieves the objectives of the rule and is consistent with statutory requirements. Section 203 requires EPA to establish a plan for informing and advising any small governments that may be significantly or uniquely impacted by the rule.

EPA has determined that the approval action promulgated does not include a Federal mandate that may result in estimated annual costs of $100 million or more to either state, local, or tribal governments in the aggregate, or to the private sector. This Federal action allows New Hampshire to implement existing and future requirements under Federal law, and imposes no new requirements. Accordingly, no additional costs to state, local, or tribal governments, or to the private sector, result from this action.

*G. Submission to Congress and the Comptroller General*

The Congressional Review Act, 5 U.S.C. 801 *et seq.*, as added by the Small Business Regulatory Enforcement Fairness Act of 1996, generally provides that before a rule may take effect, the agency promulgating the rule must submit a rule report, which includes a copy of the rule, to each House of the Congress and to the Comptroller General of the United States. EPA will submit a report containing this rule and other required information to the U.S. Senate, the U.S. House of Representatives, and the Comptroller General of the United States prior to publication of the rule in the **Federal Register**. This rule is not a ''major'' rule as defined by 5 U.S.C. 804(2).

*H. National Technology Transfer and Advancement Act*

Section 12(d) of the National Technology Transfer and Advancement Act of 1995 (''NTTAA''), Public Law No. 104–113, Section 12(d) (15 U.S.C. 272 note) directs EPA to use voluntary consensus standards in its regulatory activities unless to do so would be inconsistent with applicable law or otherwise impractical. Voluntary consensus standards are technical standards (*e.g.*, materials specifications, test methods, sampling procedures, and business practices) that are developed or adopted by voluntary consensus standards bodies. The NTTAA directs EPA to provide Congress, through OMB, explanations when the Agency decides not to use available and applicable voluntary consensus standards. This action does not involve technical standards. Therefore, EPA did not consider the use of any voluntary consensus standards.

*I. Petitions for Judicial Review*

Under section 307(b)(1) of the Clean Air Act, petitions for judicial review of this action must be filed in the United States Court of Appeals for the appropriate circuit by November 18, 2002. Filing a petition for reconsideration by the Administrator of this final rule does not affect the finality of this rule for the purposes of judicial review nor does it extend the time within which a petition for judicial review may be filed, and shall not postpone the effectiveness of such rule or action. This action may not be challenged later in proceedings to enforce its requirements (*see* section 307(b)(2)).

**List of Subjects in 40 CFR Part 63**

Environmental protection, Air pollution control, Administrative practice and procedure, Hazardous substances, Intergovernmental relations, Reporting and recordkeeping requirements.

**Authority:** This action is issued under the authority of section 112 of the Clean Air Act, as amended, 42 U.S.C. 7412.

Dated: September 3, 2002.

**Robert W. Varney,**

*Regional Administrator, EPA-New England.*

TABLE 1.—DELEGATION OF PART 60, PART 61 AND PART 63 STANDARDS TO NEW HAMPSHIRE AS SET FORTH IN THE CODE OF FEDERAL REGULATIONS AS OF JULY 1, 2001

**Part 60 Subpart Categories**

A—General Provisions, except for Sections 60.4, 60.8(b)(2), 60.8(b)(3), 60.9, 60.10, 60.11(e) and 60.16

D—Standards of Performance for Fossil-Fuel-Fired Steam Generators for which Construction is Commenced after August 17, 1971

Da—Standards of Performance for Electric Utility Steam Generating Units for which Construction is Commenced after September 18, 1978

Db—Standards of Performance for Industrial-Commercial-Institutional Steam Generating Units

Dc—Standards of Performance for Small Industrial-Commercial-Institutional Steam Generating Units
E—Standards of Performance for Incinerators
Ea—Standards of Performance for Municipal Waste Combustors for which Construction is Commenced after December 20, 1989 and on or before September 20, 1994
Eb—Standards of Performance for Large Municipal Waste Combustors for which Construction is Commenced after September 20, 1994 or for which Modification or Reconstruction is Commenced after June 19, 1996
Ec—Standards of Performance for Hospital/Medical/Infectious Waste Incinerators for Which Construction is Commenced after June 20, 1996
I—Standards of Performance for Hot Mix Asphalt Facilities
J—Standards of Performance for Petroleum Refineries
K—Standards of Performance for Storage Vessels for Petroleum Liquids for which Construction, Reconstruction, or Modification Commenced after June 11, 1973, and prior to May 19, 1978
Ka—Standards of Performance for Storage Vessels for Petroleum Liquids for which Construction, Reconstruction, or Modification Commenced after May 18, 1978, and prior to July 23, 1984
Kb—Standards of Performance for Volatile Organic Liquid Storage Vessels, Including Petroleum Liquid Storage Vessels, for which Construction, Reconstruction, or Modification Commenced after July 23, 1984
L—Standards of Performance for Secondary Lead Smelters
M—Standards of Performance for Secondary Brass and Bronze Production Plants
N—Standards of Performance for Primary Emissions from Basic Oxygen Process Furnaces for which Construction is Commenced after June 11, 1973
O—Standards of Performance for Sewage Treatment Plants
AA—Standards of Performance for Steel Plants: Electric Arc Furnaces Constructed after October 21, 1974 and on or before August 17, 1983
BB—Standards of Performance for Kraft Pulp Mills
DD—Standards of Performance for Grain Elevators
EE—Standards of Performance for Surface Coating of Metal Furniture
GG—Standards of Performance for Stationary Gas Turbines
KK—Standards of Performance for Lead-Acid Battery Manufacturing Plants
LL—Standards of Performance for Metallic Mineral Processing Plants
QQ—Standards of Performance for the Graphic Arts Industry: Publication Rotogravure Printing
RR— Standards of Performance for Pressure Sensitive Tape and Label Surface Coating Operations
TT—Standards of Performance for Metal Coil Surface Coating
UU—Standards of Performance for Asphalt Processing and Asphalt Roofing Manufacture
VV—Standards of Performance for Equipment Leaks of VOC in the Synthetic Organic Chemicals Manufacturing Industry
WW—Standards of Performance for the Beverage Can Surface Coating Industry
XX—Standards of Performance for Bulk Gasoline Terminals
BBB—Standards of Performance for the Rubber Tire Manufacturing Industry
FFF—Standards of Performance for Flexible Vinyl and Urethane Coating and Printing
GGG—Standards of Performance for Equipment Leaks of VOC in Petroleum Refineries
HHH—Standards of Performance for Synthetic Fiber Production Facilities
JJJ—Standards of Performance for Petroleum Dry Cleaners
OOO—Standards of Performance for Nonmetallic Mineral Processing Plants
QQQ—Standards of Performance for VOC Emissions from Petroleum Waste Water Systems
SSS—Standards of Performance for Magnetic Tape Coating Facilities
TTT—Standards of Performance for Industrial Surface Coating: Surface Coating of Plastic Parts for Business Machines
UUU—Standards of Performance for Calciners and Dryers in Mineral Industries
VVV—Standards of Performance for Polymeric Coating of Supporting Substrates Facilities
WWW—Standards of Performance for Municipal Solid Waste Landfills
AAAA—Standards of Performance for Small Municipal Waste Combustion Units
CCCC—Standards of Performance for Commercial and Industrial Solid Waste Incineration Units

**Part 61 Subpart Categories**

C—National Emission Standards for Beryllium
E—National Emission Standards for Mercury
J—National Emission Standards for Equipment Leaks, Fugitive Emission Sources, of Benzene
M—National Emission Standards for Asbestos, except for 40 CFR § 61.151, Inactive Waste Disposal Sites
V— National Emission Standards for Equipment Leaks, Fugitive Emission Sources

**Part 63 Subpart Categories**

A—General Provisions, Delegable Authorities Identified in Section 63.91(g)
D—Regulations Governing Compliance Extensions for Early Reductions of Hazardous Air Pollutants
F—National Emission Standards for Organic Hazardous Air Pollutants from the Synthetic Organic Chemical Manufacturing Industry
G—National Emission Standards for Organic Hazardous Air Pollutants from the Synthetic Organic Chemical Manufacturing Industry for Process Vents, Storage Vessels, Transfer Operations, and Wastewater
H—National Emission Standards for Organic Hazardous Air Pollutants for Equipment Leaks
I—National Emission Standards for Organic Hazardous Air Pollutants for Certain Processes Subject to the Negotiated Regulation for Equipment Leaks
N—National Emission Standards for Chromium Emissions from Hard and Decorative Chromium Electroplating and Chromium Anodizing Tanks
O—Ethylene Oxide Emissions Standards for Sterilization Facilities
Q—National Emission Standards for Hazardous Pollutants for Industrial Process Cooling Towers
R—National Emission Standards for Gasoline Distribution Facilities, Bulk Gasoline Terminals and Pipeline Breakout Stations
S—National Emission Standards for Hazardous Air Pollutants from the Pulp and Paper Industry
T—National Emission Standards for Halogenated Solvent Cleaning
U—National Emission Standards for Hazardous Air Pollutant Emissions: Group I Polymers and Resins
W—National Emission Standards for Hazardous Air Pollutants for Epoxy Resins Production and Non-nylon Polyamides Production
X—National Emission Standards for Hazardous Air Pollutants from Secondary Lead Smelting
Y—National Emission Standards for Marine Tank Vessel Loading Operations
AA—National Emission Standards for Hazardous Air Pollutants from Phosphoric Acid Manufacturing Plants

BB—National Emission Standards for Hazardous Air Pollutants from Phosphate Fertilizer Production Plants
CC—National Emission Standards for Hazardous Air Pollutants from Petroleum Refineries
DD—National Emission Standards for Hazardous Air Pollutants from Offsite Waste and Recovery Operations
GG—National Emission Standards for Aerospace Manufacturing and Rework Facilities
HH—National Emission Standards for Hazardous Air Pollutants from Oil and Natural Gas Production Facilities
II—National Emission Standards for Shipbuilding and Ship Repair, Surface Coating
JJ—National Emission Standards for Wood Furniture Manufacturing Operations
KK—National Emission Standards for the Printing and Publishing Industry
LL—National Emission Standards for Hazardous Air Pollutants for Primary Aluminum Reduction Plants
MM—National Emission Standards for Hazardous Air Pollutants for Chemical Recovery Combustion Sources at Kraft, Soda, Sulfite, and Stand-Alone Semichemical Pulp Mills
OO—National Emission Standards for Tanks—Level 1
PP—National Emission Standards for Containers
QQ—National Emission Standards for Surface Impoundments
RR—National Emission Standards for Individual Drain Systems
SS—National Emission Standards for Closed Vent Systems, Control Devices, Recovery Devices and Routing to a Fuel Gas System or a Process
TT—National Emission Standards for Equipment Leaks—Control Level 1
UU—National Emission Standards for Equipment Leaks—Control Level 2 Standards
VV—National Emission Standards for Oil-Water Separators and Organic-Water Separators
WW—National Emission Standards for Storage Vessels, Tanks—Control Level 2
YY—National Emission Standards for Hazardous Air Pollutants for Source Categories: Generic Maximum Achievable Control Technology Standards
CCC—National Emission Standards for Hazardous Air Pollutants for Steel Pickling—HCl Process Facilities and Hydrochloric Acid Regeneration Plants
DDD—National Emission Standards for Hazardous Air Pollutants for Mineral Wool Production
EEE—National Emission Standards for Hazardous Air Pollutants from Hazardous Waste Combustors
GGG—National Emission Standards for Pharmaceuticals Production
HHH—National Emission Standards for Hazardous Air Pollutants from Natural Gas Transmission and Storage Facilities
III—National Emission Standards for Hazardous Air Pollutants for Flexible Polyurethane Foam Production
JJJ—National Emission Standards for Hazardous Air Pollutant Emissions: Group IV Polymers and Resins
LLL—National Emission Standards for Hazardous Air Pollutants from the Portland Cement Manufacturing Industry
MMM—National Emission Standards for Hazardous Air Pollutants for Pesticide Active Ingredient Production
NNN—National Emission Standards for Hazardous Air Pollutants for Wool Fiberglass Manufacturing
OOO—National Emission Standards for Hazardous Air Pollutant Emissions: Manufacture of Amino/Phenolic Resins
PPP—National Emission Standards for Hazardous Air Pollutant Emissions for Polyether Polyols Production
RRR—National Emission Standards for Hazardous Air Pollutants Secondary Aluminum Production
TTT—National Emission Standards for Hazardous Air Pollutants for Primary Lead Smelting
VVV—National Emission Standards for Hazardous Air Pollutants: Publicly Owned Treatment Works
XXX—National Emission Standards for Hazardous Air Pollutants for Ferroalloys Production: Ferromanganese and Silicomanganese

Title 40, chapter I, part 63 of the Code of Federal Regulations is amended as follows:

## PART 63—[AMENDED]

1. The authority citation for part 63 continues to read as follows:

**Authority:** 42 U.S.C. 7401, *et seq.*

## Subpart E—Approval of State Programs and Delegation of Federal Authorities

2. Section 63.99 is amended by adding paragraph (a)(29)(i) to read as follows:

**§ 63.99 Delegated Federal Authorities**

(a) * * *

(29) New Hampshire.

(i) New Hampshire is delegated the authority to implement and enforce all existing and future unchanged 40 CFR part 63 standards in accordance with the delegation procedures in Attachment II of the delegation request letter dated May 9, 2002 submitted by NH DES to EPA and any mutually acceptable amendments to those delegation procedures.

* * * * *

[FR Doc. 02–23728 Filed 9–18–02; 8:45 am]

BILLING CODE 6560–50–P

## ENVIRONMENTAL PROTECTION AGENCY

## 40 CFR Part 81

**[CA083–CORR; FRL–7376–2]**

## Clean Air Act Redesignation and Reclassification, Searles Valley Nonattainment Area; Correction

**AGENCY:** Environmental Protection Agency (EPA).

**ACTION:** Final rule; correction.

**SUMMARY:** This action corrects language that appeared in a final rule published in the **Federal Register** on August 6, 2002. The final rule changed the boundaries of the Searles Valley, California moderate PM–10 nonattainment area.

**EFFECTIVE DATE:** This action is effective on September 19, 2002.

**FOR FURTHER INFORMATION CONTACT:** Karen Irwin, EPA Region IX, (415) 947–4116.

**SUPPLEMENTARY INFORMATION:** On August 6, 2002 (67 FR 50805), EPA published a final rulemaking action changing the boundaries of the Searles Valley, California moderate PM–10 nonattainment area (NA) by dividing that area into three new, separate moderate NAs: Coso Junction, Indian Wells Valley, and Trona. EPA also made a finding that the Trona NA has attained the 24-hour and annual PM–10 national ambient air quality standards by the Clean Air Act mandated attainment date for moderate nonattainment areas.

The title of the aforementioned action contains an error and is being corrected in this action. The error is a reference to determination of attainment of the PM–10 standards for the Coso Junction Area, rather than the Trona Area.

In rule FR Doc. 02–19798 published on August 6, 2002, make the following correction. On page 50805, in the first column, the title is being corrected to

now state: ''Clean Air Act Redesignation and Reclassification, Searles Valley Nonattainment Area; Designation of Coso Junction, Indian Wells Valley, and Trona Nonattainment Areas; California; Determination of Attainment of the PM–10 Standards for the Trona Area; Particulate Matter of 10 microns or less (PM–10).''

Under Executive Order 12866 (58 FR 51735, October 4, 1993), this action is not a ''significant regulatory action'' and is therefore not subject to review by the Office of Management and Budget. In addition, this action does not impose any enforceable duty or contain any unfunded mandate as described in the Unfunded Mandates Reform Act of 1995 (Public Law 104–4), or require prior consultation with State officials as specified by Executive Order 12875 (58 FR 58093, October 28, 1993), or involve special consideration of environmental justice related issues as required by Executive Order 12898 (59 FR 7629, February 16, 1994).

Because this action is not subject to notice-and-comment requirements under the Administrative Procedure Act or any other statute, it is not subject to the provisions of the Regulatory Flexibility Act (5 U.S.C. 601 *et seq.*).

Under 5 U.S.C. 801(a)(1)(A) as added by the Small Business Regulatory Enforcement Fairness Act of 1996, EPA submitted a report containing this rule and other required information to the U.S. Senate, the U.S. House of Representatives and the Comptroller General of the General Accounting Office prior to publication of this rule in today's **Federal Register**. This rule is not a ''major rule'' as defined by 5 U.S.C. 804(2).

**List of Subjects in 40 CFR Part 81**

Environmental protection, Air pollution control, National parks, Wilderness areas.

Dated: September 9, 2002.

**Wayne Nastri,**

*Regional Administrator, Region IX.*

[FR Doc. 02–23730 Filed 9–18–02; 8:45 am]

BILLING CODE 6560–50–P

---

## ENVIRONMENTAL PROTECTION AGENCY

## 40 CFR Part 180

**[OPP–2002–0224; FRL–7200–4]**

## Diflubenzuron; Pesticide Tolerances

**AGENCY:** Environmental Protection Agency (EPA).

**ACTION:** Final rule.

**SUMMARY:** This regulation establishes tolerances for the combined residues of the insecticide diflubenzuron (N-[[4-chlorophenyl)amino]-carbonyl]-2,6-difluorobenzamide) and its metabolites, 4-chlorophenylurea (CPU) and 4-chloroaniline (PCA) in or on the following raw agricultural commodities: Grass, forage, fodder, and hay group 17 at 6.0 ppm; pepper at 1.0 ppm; stone fruit group 12 (except cherries) at 0.07 ppm; nut, tree, group 14 at 0.06 ppm; almond, hulls at 6.0 ppm; pistachio at 0.06 ppm; cattle, meat byproducts at 0.15 ppm; goat, meat byproducts at 0.15 ppm; hog, meat byproducts at 0.15 ppm; horse, meat byproducts at 0.15 ppm; sheep, meat byproducts at 0.15 ppm. This regulation is increasing the tolerance level for meat byproducts of cattle, goat, hog, horse, and sheep. This regulation is also changing the tolerance on pasture grass to grass, forage, fodder, and hay group 17. Interregional Research Project Number 4 (IR-4), and Uniroyal Chemical Company requested these tolerances under the Federal Food, Drug, and Cosmetic Act, as amended by the Food Quality Protection Act of 1996.

**DATES:** This regulation is effective September 19, 2002. Objections and requests for hearings, identified by docket control number OPP–2002–0224, must be received on or before November 18, 2002.

**ADDRESSES:** Written objections and hearing requests may be submitted by mail, in person, or by courier. Please follow the detailed instructions for each method as provided in Unit VI. of the **SUPPLEMENTARY INFORMATION**. To ensure proper receipt by EPA, your objections and hearing requests must identify docket control number OPP–2002–0224 in the subject line on the first page of your response.

**FOR FURTHER INFORMATION CONTACT:** By mail: Rita Kumar, Registration Division (7505C), Office of Pesticide Programs, Environmental Protection Agency, 1200 Pennsylvania Ave., NW.,Washington, DC 20460; telephone number: (703) 308–8291; e-mail address: kumar.rita@epa.gov.

**SUPPLEMENTARY INFORMATION:**

### I. General Information

*A. Does this Action Apply to Me?*

You may be affected by this action if you are an agricultural producer, food manufacturer, or pesticide manufacturer. Potentially affected categories and entities may include, but are not limited to:

| Categories | NAICS codes | Examples of potentially affected entities |
|---|---|---|
| Industry | 111<br>112<br>311<br>32532 | Crop production<br>Animal production<br>Food manufacturing<br>Pesticide manufacturing |

This listing is not intended to be exhaustive, but rather provides a guide for readers regarding entities likely to be affected by this action. Other types of entities not listed in the table could also be affected. The North American Industrial Classification System (NAICS) codes have been provided to assist you and others in determining whether or not this action might apply to certain entities. If you have questions regarding the applicability of this action to a particular entity, consult the person listed under **FOR FURTHER INFORMATION CONTACT**.

*B. How Can I Get Additional Information, Including Copies of this Document and Other Related Documents?*

1. *Electronically.*You may obtain electronic copies of this document, and certain other related documents that might be available electronically, from the EPA Internet Home Page at http://www.epa.gov/. To access this document, on the Home Page select ''Laws and Regulations'', ''Regulations and Proposed Rules,'' and then look up the entry for this document under the ''**Federal Register**—Environmental Documents.'' You can also go directly to the **Federal Register** listings at http://www.epa.gov/fedrgstr/. A frequently updated electronic version of 40 CFR part 180 is available at http://www.access.gpo.gov/nara/cfr/cfrhtml_00/Title_40/40cfr180_00.html, a beta site currently under development. To access the OPPTS Harmonized Guidelines referenced in this document, go directly to the guidelines at http://www.epa.gov/opptsfrs/home/guidelin.htm.

2. *In person.* The Agency has established an official record for this action under docket control number OPP–2002–0224. The official record consists of the documents specifically referenced in this action, and other information related to this action, including any information claimed as Confidential Business Information (CBI). This official record includes the documents that are physically located in the docket, as well as the documents that are referenced in those documents. The public version of the official record does not include any information claimed as CBI. The public version of

the official record, which includes printed, paper versions of any electronic comments submitted during an applicable comment period is available for inspection in the Public Information and Records Integrity Branch (PIRIB), Rm. 119, Crystal Mall #2, 1921 Jefferson Davis Hwy., Arlington, VA, from 8:30 a.m. to 4 p.m., Monday through Friday, excluding legal holidays. The PIRIB telephone number is (703) 305–5805.

## II. Background and Statutory Findings

In the **Federal Register** of December 14, 2001 (66 FR 64823) (6813–2), EPA issued a notice pursuant to section 408 of the Federal Food, Drug, and Cosmetic Act (FFDCA), 21 U.S.C. 346a, as amended by the Food Quality Protection Act of 1996 (FQPA) (Public Law 104–170), announcing the filing of pesticide petitions (PP 1E6347 and 1F6235) by Interregional Research Project Number 4 (IR-4), and Uniroyal Chemical Company Inc., 681 US Highway 1 South, North Brunswick, NJ 08902, and Middlebury, CT 06749. This notice included a summary of the petitions prepared by IR-4 and Uniroyal Chemical Company, the registrants. There were no comments received in response to the notice of filing.

The petitions requested that 40 CFR 180.377 be amended by establishing a tolerance for the combined residues of the insecticide diflubenzuron (N-[[4-chlorophenyl)amino]-carbonyl]-2,6-difluorobenzamide) and its metabolites, 4-chlorophenylurea (CPU) and 4-chloroaniline (PCA), in or on grass, forage, fodder, and hay, group 17 at 6.0 part per million (ppm); pepper at 1.0 ppm; stone fruit group (except cherries) at 0.05 ppm; tree nut group at 0.05 ppm; almond, hulls at 5.0 ppm; pistachio at 0.05 ppm; and meat byproducts at 0.15 ppm.

Section 408(b)(2)(A)(i) of the FFDCA allows EPA to establish a tolerance (the legal limit for a pesticide chemical residue in or on a food) only if EPA determines that the tolerance is ''safe.'' Section 408(b)(2)(A)(ii) defines ''safe'' to mean that ''there is a reasonable certainty that no harm will result from aggregate exposure to the pesticide chemical residue, including all anticipated dietary exposures and all other exposures for which there is reliable information.'' This includes exposure through drinking water and in residential settings, but does not include occupational exposure. Section 408(b)(2)(C) requires EPA to give special consideration to exposure of infants and children to the pesticide chemical residue in establishing a tolerance and to ''ensure that there is a reasonable certainty that no harm will result to infants and children from aggregate exposure to the pesticide chemical residue.''

EPA performs a number of analyses to determine the risks from aggregate exposure to pesticide residues. For further discussion of the regulatory requirements of section 408 and a complete description of the risk assessment process, see the final rule on Bifenthrin Pesticide Tolerances (62 FR 62961, November 26, 1997) (FRL–5754–7).

## III. Aggregate Risk Assessment and Determination of Safety

Consistent with section 408(b)(2)(D), EPA has reviewed the available scientific data and other relevant information in support of this action. EPA has sufficient data to assess the hazards of and to make a determination on aggregate exposure, consistent with section 408(b)(2), for a tolerance for residues of the insecticide diflubenzuron (N-[[4-chlorophenyl)amino]-carbonyl]-2,6-difluorobenzamide) and its metabolites, 4-chlorophenylurea (CPU) and 4-chloroaniline (PCA) on grass, forage, fodder, and hay group at 6.0 ppm; pepper at 1.0 ppm; stone fruit group (except cherries) at 0.07 ppm; tree nut group at 0.06 ppm; almond hulls at 6.0 ppm; pistachio at 0.06 ppm; cattle, meat byproducts at 0.15 ppm; goat, meat byproducts at 0.15 ppm; hog, meat byproducts at 0.15 ppm; horse, meat byproducts at 0.15 ppm; sheep, meat byproducts at 0.15 ppm.

EPA's assessment of exposures and risks associated with establishing the tolerances follows.

### *A. Toxicological Profile*

EPA has evaluated the available toxicity data and considered its validity, completeness, and reliability as well as the relationship of the results of the studies to human risk. EPA has also considered available information concerning the variability of the sensitivities of major identifiable subgroups of consumers, including infants and children. The nature of the toxic effects caused by diflubenzuron are discussed in the following Table 1 as well as the no observed adverse effect level (NOAEL) and the lowest observed adverse effect level (LOAEL) from the toxicity studies reviewed.

TABLE 1.—SUBCHRONIC, CHRONIC, AND OTHER TOXICITY

| Guideline No. | Study Type | Results |
|---|---|---|
| 870.3100 | 90–Day oral toxicity rodents | NOAEL < 8 mg/kg/day<br>LOAEL = 8 mg/kg/day based on increased methemoglobinemia, and signs of hemolytic anemia, erythrocyte destruction in the spleen and liver and regeneration of erythrocytes in the bone marrow. |
| 870.3150 | 90–Day oral toxicity in nonrodents | NOAEL = 2 mg/kg/day<br>LOAEL = 6.24 mg/kg/day based on methemoglobinemia. |
| 870.3200 | 21/28–Day dermal toxicity | NOAEL = 500 mg/kg/day<br>LOAEL = 1,000 mg/kg/day based on methemoglobinemia (limit dose). |
| 870.3465 | 28–Day inhalation toxicity | NOAEL = 20.3 mg/kg/day highest dose tested (HDT)<br>LOAEL was not established. |
| 870.3700 | Prenatal developmental in rodents | Maternal NOAEL = 1,000 mg/kg/day (Limit Dose)<br>LOAEL was not established.<br>Developmental NOAEL = 1,000 mg/kg/day (Limit Dose)<br>LOAEL was not established. |

TABLE 1.—SUBCHRONIC, CHRONIC, AND OTHER TOXICITY—Continued

| Guideline No. | Study Type | Results |
|---|---|---|
| 870.3700 | Prenatal developmental in nonrodents | Maternal NOAEL = 1,000 mg/kg/day (Limit Dose)<br>LOAEL was not established.<br>Developmental NOAEL = 1,000 mg/kg/day (Limit Dose)<br>LOAEL was not established. |
| 870.3800 | Reproduction and fertility effects | Parental/Systemic NOAEL < 36 mg/kg/day (LDT)<br>LOAEL = 36 mg/kg/day based on dose-related decreased hematocrit, hemoglobin concentration, red blood cell count and an increase in percent methemoglobin, changes in cell morphology and brown pigment in Kupffer cells.<br>Reproductive NOAEL> 4254 mg/kg/day (HDT)<br>LOAEL was not established.<br>Offspring NOAEL = 427 mg/kg/day<br>LOAEL = 4254 mg/kg/day based on Significant decrease in F-1 pup weights on day 4, 8 and 21 of lactation. |
| 870.4100 | Chronic toxicity dogs | NOAEL = 2 mg/kg/day<br>LOAEL = 10 mg/kg/day based on methemoglobinemia and sulfhemoglobinemia. |
| 870.4200 | Carcinogenicity rats | NOAEL was not established<br>LOAEL = 7.8 mg/kg/day based on histological evidence of erythrocyte destruction and compensatory regeneration.<br>No evidence of carcinogenicity |
| 870.4300 | Carcinogenicity mice | NOAEL = 2.4 mg/kg/day LOAEL = 12 mg/kg/day based on increased methemoglobin and sulfhemoglobin levels.<br>No evidence of carcinogenicity |
| 870.5100 | Gene Mutation | *Salmonella* strains TA98, TA100, TA1535, TA1537 and TA1538 exposed to diflubenzuron in DMSO at doses of 0 to 1,000 μg/plate both in the presence and absence of S9 did not induce mutations. |
| 870.5375 | Cytogenetics | Chinese hamster ovary cells *in vitro* exposure to diflubenzuron in DMSO at dose levels of 200 to 250 μg/mL both in the presence and absence of S9 did not induce an increase in chromosomal aberrations. |
| 870.5550 | Other Effects | In the UDS assay primary rat hepatocytes exposed to diflubenzuron in DMSO at dose levels of 0.1 to 333 μg/mL did not induce unscheduled DNA syntheses. |
| 870.7485 | Metabolism and pharmacokinetics | [$^{14}$C-anilino]-diflubenzuron was completely absorbed and 87% of radioactivity was recovered in the urine and feces as parent, diflubenzuron by 96 hours post-dosing. Diflubenzuron did not metabolize to 4-chloroaniline (CPA), or chlorophenylurea (CPU); the former was associated with methemoglobin formation and tumor formation in rats and mice in the NTP study.<br>[U-$^{14}$C-phenyl]-chlorophenylurea (CPU) was completely absorbed and 91% of the dose was eliminated in urine and feces by 144 hours. Unmetabolized CPU was not identified in urine or feces. Most of urinary/fecal metabolites were sulfate or glucuronide conjugates of CPU. |
| 870.7600 | Dermal penetration | Dermal application of $^{14}$C) diflubenzuron at either 0.005 or 0.05 mg/cm.sq. resulted in less than 0.5% absorption at any dose level after 1, 4 or 10 hours of exposure. |
| N/A | Special studies | In acute oral toxicity study in rats CPA at 62 mg/kg caused significant increase in methemoglobinemia while CPU at 200 mg/kg did not cause methemoglobinemia. |

*B. Toxicological Endpoints*

The dose at which the NOAEL from the toxicology study identified as appropriate for use in risk assessment is used to estimate the toxicological level of concern (LOC). However, the lowest dose at which the LOAEL is sometimes used for risk assessment if no NOAEL was achieved in the toxicology study selected. An uncertainty factor (UF) is applied to reflect uncertainties inherent in the extrapolation from laboratory animal data to humans and in the variations in sensitivity among members of the human population as well as other unknowns. An UF of 100 is routinely used, 10X to account for interspecies differences and 10X for intra species differences.

The FQPA Safety Factor Committee (SFC) recommended that the FQPA safety factor used in human health risk assessments (as required by FQPA of August 3, 1996) be removed (reduced to 1x) in assessing the risk posed by this chemical. Consequently, the current cRfD and cPAD values are equivalent (0.02 mg/kg/day). This decision was based on the following:

1. There is no indication of quantitative or qualitative increased susceptibility of rats or rabbits to *in utero* or postnatal exposure;
2. A developmental neurotoxicity study (DNT) with diflubenzuron is not required;
3. Food and drinking water exposure assessments will not underestimate the potential exposure for infants and children; and
4. There are currently no registered or proposed residential (non-occupational) uses of diflubenzuron. Although there are no registered homeowner uses, there

is potential for professional applications to outdoor residential and recreational areas to control mosquitos, moths, and other insects. However, the potential for post-application residential exposures are expected to be limited. Due to the low dermal absorption rate (0.5%) of diflubenzuron, and since it is only applied to the tree canopy, minimal bystander contact is expected.

For dietary risk assessment (other than cancer) the Agency uses the UF to calculate an acute or chronic reference dose (acute RfD or chronic RfD) where the RfD is equal to the NOAEL divided by the appropriate UF (RfD = NOAEL/UF). Where an additional safety factor is retained due to concerns unique to the FQPA, this additional factor is applied to the RfD by dividing the RfD by such additional factor. The acute or chronic Population Adjusted Dose (aPAD or cPAD) is a modification of the RfD to accommodate this type of FQPA Safety Factor.

For non-dietary risk assessments (other than cancer) the UF is used to determine the LOC. For example, when 100 is the appropriate UF (10X to account for interspecies differences and 10X for intraspecies differences) the LOC is 100. To estimate risk, a ratio of the NOAEL to exposures (margin of exposure (MOE) = NOAEL/exposure) is calculated and compared to the LOC.

The linear default risk methodology (Q*) is the primary method currently used by the Agency to quantify carcinogenic risk. The Q* approach assumes that any amount of exposure will lead to some degree of cancer risk. A Q* is calculated and used to estimate risk which represents a probability of occurrence of additional cancer cases (e.g., risk is expressed as $1 \times 10^{-6}$ or one in a million). Under certain specific circumstances, MOE calculations will be used for the carcinogenic risk assessment. In this non-linear approach, a ''point of departure'' is identified below which carcinogenic effects are not expected. The point of departure is typically a NOAEL based on an endpoint related to cancer effects though it may be a different value derived from the dose response curve. To estimate risk, a ratio of the point of departure to exposure ($MOE_{cancer}$ = point of departure/exposures) is calculated. A summary of the toxicological endpoints for diflubenzuron and its metabolites used for human risk assessment is shown in the following Table 2:

TABLE 2.—SUMMARY OF TOXICOLOGICAL DOSE AND ENDPOINTS FOR DIFLUBENZURON AND ITS METABOLITES FOR USE IN HUMAN RISK ASSESSMENT[1].

| Exposure Scenario | Dose Used in Risk Assessment, UF | FQPA SF** and LOC for Risk Assessment | Study and Toxicological Effects |
|---|---|---|---|
| Acute Dietary all populations | Not Applicable | Not Applicable | No appropriate endpoint attributable to single exposure was available in oral studies. Therefore, a risk assessment is not required. |
| Chronic Dietary (All populations) | NOAEL= 2 mg/kg/day<br>UF = 100<br>Chronic RfD = 0.02 mg/kg/day | FQPA SF = 1x<br>cPAD = chronic RfD/FQPA SF<br>= 0.02 mg/kg/day | Chronic Toxicity Study - Dog<br>LOAEL = 10 mg/kg/day based on methemoglobinemia and sulfhemoglobinemia |
| Short- and Intermediate- Term Incidental Oral (1 day–6 months) (Residential) | Not applicable | Not applicable | These endpoints were not evaluated. There are no registered uses of diflubenzuron which result in significant residential exposure. |
| Short- Term Dermal (1–30 days) (Occupational) | NOAEL = 500 mg/kg/day | LOC for MOE = 100 | 21-Day dermal rat<br>LOAEL = 1,000 mg/kg/day based on methemoglobinemia |
| Intermediate-Term Dermal (1–6 months) (Occupational) | NOAEL = 2 mg/kg/day | LOC for MOE = 100 | 13 - week oral dog<br>LOAEL = 6.4 mg/kg/day based on methemoglobinemia |
| Long- Term Dermal (Longer than 6 months) (Occupational) | NOAEL = 2 mg/kg/day | LOC for MOE = 100 | Chronic Toxicity Study - Dog<br>LOAEL = 10 mg/kg/day based on methemoglobinemia and sulfhemoglobinemia |
| Short- Term Inhalation (1–30 days) (Occupational) | NOAEL = 20.30[2] mg/kg/day | LOC for MOE = 100 | 28–day Inhalation Toxicity Study - Rat/21–day Inhalation Toxicity Study - Rat<br>LOAEL = 0.12 mg/L based on methemoglobinemia (21–day study) |
| Intermediate-Term Inhalation (1–6 months) (Occupational) | NOAEL = 20.30[2] mg/kg/day | LOC for MOE = 100 | 28–day Inhalation Toxicity Study - Rat/21–day Inhalation Toxicity Study - Rat<br>LOAEL = 0.12 mg/L based on methemoglobinemia (21–day study) |
| Long - Term Inhalation (Longer than 6 months) (Occupational) | NOAEL = 2 mg/kg/day | LOC for MOE = 100 (Occupational) | Chronic Toxicity Study - Dog<br>LOAEL = 10 mg/kg/day based on methemoglobinemia and sulfhemoglobinemia |
| Cancer (Oral, dermal, inhalation) | Diflubenzuron Not Required | Not Applicable | Acceptable oral rat and mouse carcinogenicity studies; no evidence of carcinogenic or mutagenic potential. Group E evidence of non-carcinogenicity for humans. |

TABLE 2.—SUMMARY OF TOXICOLOGICAL DOSE AND ENDPOINTS FOR DIFLUBENZURON AND ITS METABOLITES FOR USE IN HUMAN RISK ASSESSMENT[1].—Continued

| Exposure Scenario | Dose Used in Risk Assessment, UF | FQPA SF** and LOC for Risk Assessment | Study and Toxicological Effects |
|---|---|---|---|
| Cancer (Oral, dermal, inhalation) | PCA Group B2 probably human carcinogen Q1* $1.12 \times 1^{-1}$ $(mg/kg/day)^{-1}$ | Not Applicable | NTP Oral mouse study |
| Cancer (Oral, dermal, inhalation) | CPU $Q_1$* based on monuron a structural analog and the $Q_1$*$1.52 \times 10^{-2}$ | Not Applicable | NTP Oral rat study |

[1]UF = uncertainty factor, FQPA SF = FQPA safety factor, NOAEL = no observed adverse effect level, LOAEL = lowest observed adverse effect level, cPAD = chronic population adjusted dose, RfD = reference dose, MOE = margin of exposure, LOC = level of concern.
[2]Conversion from mg/L to oral dose (mg/kg/day)
* The reference to the FQPA Safety Factor refers to any additional safety factor retained due to concerns unique to the FQPA.

*C. Exposure Assessment*

1. *Dietary exposure from food and feed uses*. Tolerances have been established (40 CFR 180.377) for the combined residues of the insecticide diflubenzuron (N-[[4-chlorophenyl)amino]-carbonyl]-2,6-difluorobenzamide and its metabolites, in or on a variety of raw agricultural commodities. Risk assessments were conducted by EPA to assess dietary exposures from diflubenzuron and its metabolites in food as follows:

i. *Acute exposure*. Acute dietary risk assessments are performed for a food-use pesticide if a toxicological study has indicated the possibility of an effect of concern occurring as a result of a one day or single exposure. Acute doses and endpoints were not selected for the general U.S. population (including infants and children) or the females 13–50 years old population subgroup for diflubenzuron; therefore, an acute dietary exposure analysis was not performed.

ii. *Chronic exposure*. In conducting this chronic dietary risk assessment the Dietary Exposure Evaluation Model (DEEM™) analysis evaluated the individual food consumption as reported by respondents in the USDA 1989–1992 nationwide Continuing Surveys of Food Intake by Individuals (CSFII) and accumulated exposure to the chemical for each commodity. The following assumptions were made for the chronic exposure assessments:

For the chronic analysis, anticipated residue (AR) information based on field trial data and percent crop treated (%CT) information for some commodities were used. Dietary exposure estimates for representative population subgroups are presented in Table 3. Chronic exposure estimates are expressed in mg/kg bw/day and as a percent of the cPAD. The chronic dietary risk assessment also indicates that for all included commodities, the chronic dietary risk estimates are below Agency's level of concern (<100% cPAD) for the general U.S. population (<1.0% of the cPAD) and all population subgroups. The chronic dietary exposure estimate for the highest exposed population subgroup (all infants (<1 year old)) is 5.5% of the cPAD.

TABLE 3.—RESULTS OF CHRONIC DIETARY EXPOSURE ANALYSIS.

| Population Subgroup | cPAD (mg/kg/day) | Exposure (mg/kg/day) | % cPAD |
|---|---|---|---|
| U.S. Population (Total) | 0.02 | 0.000153 | < 1.0 |
| All Infants (> 1 year old) | 0.02 | 0.001109 | 5.5 |
| Children 1–6 years old | 0.02 | 0.000248 | 1.2 |
| Children 7–12 years old | 0.02 | 0.000199 | 1.0 |
| Females 13–50 years old | 0.02 | 0.000112 | < 1.0 |
| Males 13–19 years old | 0.02 | 0.000065 | < 1.0 |
| Males 20+ years old | 0.02 | 0.000124 | < 1.0 |
| Seniors 55+ years old | 0.02 | 0.000144 | < 1.0 |

iii. *Cancer*. In 1995, based on the available evidence, which included carcinogenicity studies in rats and mice, and battery of negative mutagenicity studies, diflubenzuron was classified as Group E, evidence of non-carcinogenicity for humans. Rat metabolism data generated at this time also indicated that diflubenzuron was metabolized to PCA and CPU and estimated to be about 2% of *in vivo* conversion.

At that time, EPA also considered the carcinogenicity of PCA, a known diflubenzuron metabolite, that was tested by the NTP in 1989 for carcinogenicity in rats and mice as a hydrochloride form. In rats treated with PCA, a treatment-related increased incidence of uncommon sarcomas of the spleen was observed in males and included fibrosarcomas, hemangiosarcomas, and osteosarcomas, many of which metastasized to other sites. In addition, in treated females, one fibrosarcoma and one osteosarcoma were also observed. Furthermore, there

was a marginally-increased incidence of pheochromocytomas in the adrenal glands in both males and females at the HDT. In mice treated with PCA, a treatment-related increased incidence of combined hepatocellular adenomas/carcinomas was observed in males. The increase in combined tumors was primarily due to a dose-related increase in hepatocellular carcinomas. Many of these tumors metastasized to the lungs. An increased incidence of hemangiosarcomas in the spleen and/or liver of the male mice was also observed at the HDT. The incidence was higher than the historical control mean for male mice. There was no evidence of a carcinogenic response in female mice. On this basis PCA was classified as a Group B2, probable human carcinogen.

Recently submitted tier 2 rat metabolism data indicate that diflubenzuron does not metabolize to PCA or CPU nor is CPU converted to PCA. The Agency concluded that a 2% *in vivo* conversion factor for diflubenzuron to PCA or CPU should be dropped. It was recommended that non-carcinogenic risk assessment should include parent, CPU and PCA; and cancer risk for CPU and PCA should be assessed individually.

The $Q_1$* (estimated unit risk) for PCA, based on male mouse liver adenoma and/or carcinoma combined tumor rates was calculated to be 1.12 x $10^{-1}$ (mg/kg/day)$^{-1}$ in human equivalents.

CPU is structurally related to monuron (N,N-dimethyl-CPU), a compound producing tumors of the kidney and liver in male rats. Given that there is no accepted mechanism of carcinogenicity for monuron and that CPU is major metabolite of monuron in rats, a $Q_1$* was calculated for monuron and applied to CPU. The most potent $Q_1$* for monuron, based on male rat liver neoplastic nodule and/or carcinoma combined tumor rats, was calculated to be 1.52 x $10^{-2}$ (mg/kg/day)$^{-1}$ in human equivalents. Although CPU is structurally related to monuron, there is no need to assess aggregate or cumulative risk scenarios using monuron because monuron is no longer a registered pesticide active ingredient.

a. *Cancer risk from consumption of PCA and CPU*. Based on the submitted metabolism studies, there are two possible sources for dietary exposure to PCA and CPU: Residues in plants/fungi (mushrooms) and residues in animal commodities (milk and liver).

b. *Mushrooms/Milk/Liver*. EPA used results from metabolism studies to determine the percent of the total radioactive residue (TRR) present as PCA+CPU in mushrooms, milk and liver. For milk and liver, ARs were calculated from the results of the ruminant feeding study using tolerance level residues in livestock feed items and adjusting for percent crop treated. The total levels of PCA+CPU were estimated by multiplying the ratio of (PCA+CPU)/Diflubenzuron by the diflubenzuron consumption (from DEEM). The U.S. population exposure to PCA and CPU is given in Table 4 as follows.

TABLE 4.—DIETARY CANCER EXPOSURE (TO PCA AND CPU).

| Commodity | (PCA+CPU)/ Diflubenzuron Ratio | Diflubenzuron Consumption mg/kg/day | PCA+CPU Consumption mg/kg/day | CPU/(PCA+CPU) Ratio | PCA Consumption mg/kg/day | CPU Consumption mg/kg/day |
|---|---|---|---|---|---|---|
| Mushrooms | 3.45 | 0.0000018 | 0.0000062 | 0.33[1] | 0.0000042 | 0.00000205 |
| Milk | 1.33 | 0.0000003 | 0.0000004 | 1.02 | 0 | 0.0000004 |
| Liver | 0.21 | 0.0000008 | 0.00000017 | 0.97 | 5 x $10^{-9}$ | 0.00000016 |
| Total | | | 0.0000068 | | 0.0000042 | 0.0000026 |

[1]Worst case ratio.
Overall U.S. exposure to PCA (Table 4): 0.0000042 mg/kg/day
Carcinogenic Risk: 4.7 x $10^{-7}$ (0.0000042 mg/kg/day x 0.112 (mg/kg/day)$^{-1}$)
Overall U.S. exposure to CPU (Table 4): 0.0000026 mg/kg/day
Carcinogenic Risk: 3.9 x $10^{-87}$ (0.0000026 mg/kg/day x 0.0152 (mg/kg/day)$^{-1}$)

The Agency does not consider the cancer dietary risk from either PCA or CPU to exceed the Agency's level of concern (generally, in the range of $10^{-6}$).

iv. *Anticipated residue and percent crop treated information*. Section 408(b)(2)(E) authorizes EPA to use available data and information on the anticipated residue levels of pesticide residues in food and the actual levels of pesticide chemicals that have been measured in food. If EPA relies on such information, EPA must require that data be provided 5 years after the tolerance is established, modified, or left in effect, demonstrating that the levels in food are not above the levels anticipated. Following the initial data submission, EPA is authorized to require similar data on a time frame it deems appropriate. As required by section 408(b)(2)(E), EPA will issue a data call-in for information relating to anticipated residues to be submitted no later than 5 years from the date of issuance of this tolerance.

Section 408(b)(2)(F) states that the Agency may use data on the actual percent of food treated for assessing chronic dietary risk only if the Agency can make the following findings: Condition 1, that the data used are reliable and provide a valid basis to show what percentage of the food derived from such crop is likely to contain such pesticide residue; Condition 2, that the exposure estimate does not underestimate exposure for any significant subpopulation group; and Condition 3, if data are available on pesticide use and food consumption in a particular area, the exposure estimate does not understate exposure for the population in such area. In addition, the Agency must provide for periodic evaluation of any estimates used. To provide for the periodic evaluation of the estimate of percent crop treated (PCT) as required by section 408(b)(2)(F), EPA may require registrants to submit data on PCT.

The Agency used percent crop treated (PCT) information as follows.

Dietary exposure estimates were based on the following percent crop treated (PCT) estimates: Grass, 1%; grapefruit, 8%; mushrooms, 31%; oranges, 2%; tangerines, 4%; cottonseed oil and meal, 2%; soybean, 1%; cattle bolus, 5%, walnuts 50%. Other commodities were assumed to be 100 percent treated. Anticipated residue levels for diflubenzuron were calculated in livestock, citrus and mushroom commodities. Anticipated residue estimates for diflubenzuron were not calculated for other raw agricultural commodities. Percent crop treated data were utilized where available.

The Agency believes that the three conditions listed above regarding percent crop treated information have been met. With respect to Condition 1, PCT estimates are derived from Federal and private market survey data, which are reliable and have a valid basis. EPA uses a weighted average PCT for chronic dietary exposure estimates. This weighted average PCT figure is derived by averaging State-level data for a period of up to 10 years, and weighting for the more robust and recent data. A weighted average of the PCT reasonably represents a person's dietary exposure over a lifetime, and is unlikely to underestimate exposure to an individual because of the fact that pesticide use patterns (both regionally and nationally) tend to change continuously over time, such that an individual is unlikely to be exposed to more than the average PCT over a lifetime. For acute dietary exposure estimates, EPA uses an estimated maximum PCT. The exposure estimates resulting from this approach reasonably represent the highest levels to which an individual could be exposed, and are unlikely to underestimate an individual's acute dietary exposure. The Agency is reasonably certain that the percentage of the food treated is not likely to be an underestimation. As to Conditions 2 and 3, regional consumption information and consumption information for significant subpopulations is taken into account through EPA's computer-based model for evaluating the exposure of significant subpopulations including several regional groups. Use of this consumption information in EPA's risk assessment process ensures that EPA's exposure estimate does not understate exposure for any significant subpopulation group and allows the Agency to be reasonably certain that no regional population is exposed to residue levels higher than those estimated by the Agency. Other than the data available through national food consumption surveys, EPA does not have available information on the regional consumption of food to which diflubenzuron may be applied in a particular area.

2. *Dietary exposure from drinking water*. The Agency lacks sufficient monitoring exposure data to complete a comprehensive dietary exposure analysis and risk assessment for diflubenzuron (N-[[4-chlorophenyl)amino]-carbonyl]-2,6-difluorobenzamide) and its metabolites, 4-chlorophenylurea (CPU) and 4-chloroaniline (PCA) in drinking water. Because the Agency does not have comprehensive monitoring data, drinking water concentration estimates are made by reliance on simulation or modeling taking into account data on the physical characteristics of diflubenzuron (N-[[4-chlorophenyl)amino]-carbonyl]-2,6-difluorobenzamide) and its metabolites, 4-chlorophenylurea (CPU) and 4-chloroaniline (PCA).

The Agency uses the FQPA Index Reservoir Screening Tool (FIRST) or the Pesticide Root Zone Model/Exposure Analysis Modeling System (PRZM/EXAMS), to produce estimates of pesticide concentrations in an index reservoir. The SCI-GROW model is used to predict pesticide concentrations in shallow groundwater. For a screening-level assessment for surface water EPA will use FIRST (a tier 1 model) before using PRZM/EXAMS (a tier 2 model). The FIRST model is a subset of the PRZM/EXAMS model that uses a specific high-end runoff scenario for pesticides. While both FIRST and PRZM/EXAMS incorporate an index reservoir environment, the PRZM/EXAMS model includes a percent crop area factor as an adjustment to account for the maximum percent crop coverage within a watershed or drainage basin.

None of these models include consideration of the impact processing (mixing, dilution, or treatment) of raw water for distribution as drinking water would likely have on the removal of pesticides from the source water. The primary use of these models by the Agency at this stage is to provide a screen for sorting out pesticides for which it is highly unlikely that drinking water concentrations would exceed human health levels of concern.

Since the models used are considered to be screening tools in the risk assessment process, the Agency does not use estimated environmental concentrations (EECs) from these models to quantify drinking water exposure and risk as a %RfD or %PAD. Instead drinking water levels of comparison (DWLOCs) are calculated and used as a point of comparison against the model estimates of a pesticide's concentration in water. DWLOCs are theoretical upper limits on a pesticide's concentration in drinking water in light of total aggregate exposure to a pesticide in food, and from residential uses. Since DWLOCs address total aggregate exposure to diflubenzuron they are further discussed in the aggregate risk sections.

Based on the PRZM/EXAMS and SCI-GROW models the estimated environmental concentrations (EECs) of diflubenzuron and CPU are estimated to be 0.99 ppb (diflubenzuron) and 8.81 ppb (CPU) for surface water and 0.0023 ppb (diflubenzuron) and 0.065 ppb (CPU) for ground water. PCA is not a significant metabolite in the environment.

3. *From non-dietary exposure*. The term ''residential exposure'' is used in this document to refer to non-occupational, non-dietary exposure (e.g., for lawn and garden pest control, indoor pest control, termiticides, and flea and tick control on pets). Although there are no registered homeowner uses for diflubenzuron, there is potential for professional applications to outdoor residential and recreational areas to control mosquitos, moths, and other insects. However, due to the low dermal absorption rate (0.05%) and extremely low dermal and inhalation toxicity, exposure through these uses is expected to be insignificant, and residential post-application exposure was not quantitatively evaluated.

4. *Cumulative exposure to substances with a common mechanism of toxicity*. Section 408(b)(2)(D)(v) requires that, when considering whether to establish, modify, or revoke a tolerance, the Agency consider ''available information'' concerning the cumulative effects of a particular pesticide's residues and ''other substances that have a common mechanism of toxicity.''

EPA does not have, at this time, available data to determine whether diflubenzuron has a common mechanism of toxicity with other substances or how to include this pesticide in a cumulative risk assessment. Unlike other pesticides for which EPA has followed a cumulative risk approach based on a common mechanism of toxicity, diflubenzuron does not appear to produce a toxic metabolite produced by other substances. For the purposes of this tolerance action, therefore, EPA has not assumed that diflubenzuron has a common mechanism of toxicity with other substances. For information regarding EPA's efforts to determine which chemicals have a common mechanism of toxicity and to evaluate the cumulative effects of such chemicals, see the final rule for Bifenthrin Pesticide Tolerances (62 FR 62961, November 26, 1997).

### *D. Safety Factor for Infants and Children*

1.*In general*. FFDCA section 408 provides that EPA shall apply an additional tenfold margin of safety for infants and children in the case of threshold effects to account for prenatal and postnatal toxicity and the completeness of the data base on toxicity and exposure unless EPA determines that a different margin of

safety will be safe for infants and children. Margins of safety are incorporated into EPA risk assessments either directly through use of a MOE analysis or through using uncertainty (safety) factors in calculating a dose level that poses no appreciable risk to humans.

2. *Prenatal and postnatal sensitivity*. Based on the developmental and reproductive toxicity studies summarized in Table 1, there is no indication of quantitative or qualitative increased susceptibility of rats or rabbits to *in utero* or postnatal exposure.

3. *Conclusion*. There is a complete toxicity data base for diflubenzuron and exposure data are complete or are estimated based on data that reasonably accounts for potential exposures. Based on the developmental and reproductive data available, EPA determined that the 10X safety factor to protect infants and children (as required by FQPA) should be removed. This decision was based on the following:

i. There is no indication of quantitative or qualitative increased susceptibility of rats or rabbits to *in utero* or postnatal exposure;

ii. A developmental neurotoxicity study (DNT) with diflubenzuron is not required;

iii. Food and drinking water exposure assessments will not underestimate the potential exposure for infants and children; and

iv. There are currently no registered or proposed residential (non-occupational) uses of diflubenzuron for homeowners. Although there are no registered homeowner uses, there is potential for professional applications to outdoor residential and recreational areas to control mosquitos, moths, and other insects. However, the potential for post-application residential exposures are expected to be limited. Due to the low dermal absorption rate (0.5%) of diflubenzuron, and since it is only applied to the tree canopy to control gypsy moths and mosquitoes, minimal bystander contact is expected.

Recently, EPA has received objections to a tolerance it established for residues of diflubenzuron in or on pears. The objections were filed by the Natural Resources Defense Council (NRDC) and raised several issues regarding aggregate exposure estimates and the additional safety factor for the protection of infants and children.

NRDC's objections raise complex legal, scientific, policy, and factual matters and EPA has initiated a public comment period on them in the **Federal Register** of June 19, 2002 (67 FR 41628) (FRL–7167–7), which ends on September 17, 2002. Although that proceeding remains ongoing, prior to acting on this current tolerance action, EPA reviewed the diflubenzuron-specific objections raised by NRDC and has addressed them below.

NRDC claims datagaps include missing residue chemistry and toxicology data for two diflubenzuron metabolites, deemed necessary by EPA to justify an unconditional registration.

EPA determined that the toxicology database for diflubenzuron is complete for assessment of increased susceptibility to infants and children as required by the Food Quality Protection Act (FQPA) . There are no data gaps for the assessment of the effects of diflubenzuron following *in utero* and/or postnatal exposure. There was no evidence that diflubenzuron targets the nervous system; neither clinical signs indicative of neurotoxicity nor neuropathology were seen in any of the acute, subchronic or chronic studies. There are reliable data that indicate there are (residual) concerns for pre- and/or post-natal toxicity. There was no evidence (quantitative or qualitative) of increased susceptibility following *in utero* exposure to rats or rabbits or to postnatal exposure to rats. In the prenatal developmental toxicity studies in rats and rabbits, no developmental toxicity was seen at the Limit Dose (1,000 mg/kg/day) and in the two-generation reproduction study in rats toxicity in the offspring was manifested as decreased body weight at approximately 4,000 mg/kg/day (4 times the Limit Dose). Based on the lack of evidence of neurotoxic potential and increased susceptibility, EPA determined that a developmental neurotoxicity study in rats was not required.

The Agency believes that it has sufficient data for the metabolites, PCA and CPU because the rate of metabolism of diflubenzuron to PCA or CPU in plants, ruminants, and the environment is low and, thus, exposure to these metabolites will be minimal. Adequate data are available to assess the cancer risks for both PCA and CPU. Even using the most conservative cancer risk assessment model, which is the low dose linear model, risk is negligible. EPA's experience is that a risk assessment using a low dose linear cancer assessment will be the most sensitive risk endpoint indicating that additional hazard testing for these metabolites will not lead to a more protective regulatory decision.

NRDC also claims that by relying on anticipated residue estimates for diflubenzuron on certain crops EPA vastly underestimates dietary exposure. This underestimation occurs, according to NRDC because EPA does not take into account that a significant number of consumers buy produce at farm stands. Even assuming that exposure as a result of purchases at farm stands constitute more than a negligible exposure, NRDC's claims here are inaccurate. Anticipated residues are based on data from crop field trials using application rates and procedures that will produce maximum residues under the currently-approved pesticide label at the time of harvest. As such, they are likely to overstate not understate residue levels of crops at farm stands.

Finally, NRDC asserts that EPA has underestimated aggregate exposure to diflubenzuron because EPA concluded that application of diflubenzuron to tree canopies would result in negligible residential exposure to diflubenzuron. After review, however, EPA reaffirms that these potential exposures are expected to be limited. The label states that ''applications should be made during periods of minimal use.'' and requires users to ''Notify persons using recreational facilities or living in the area to be sprayed before application.'' Diflubenzuron is only applied by commercial applicators to the tree canopy for control of gypsy moths and mosquitoes. Generally applied by helicopter, these sprays are not aerosols or ultra low volume sprays designed as space sprays, but are rather directed to the tree canopy and designed to impinge on the tree tops where they would be effective in pest control. The sprays designed for application to tree canopies utilize much larger droplet sizes which are essentially nonrespirable; therefore, minimal inhalation exposure to bystanders is expected. Additionally, due to a low dermal absorption rate (0.5%), the potential for dermal exposure to bystanders is expected to be minimal.

In any event, EPA would note that the results of the chronic dietary analysis indicated that the estimated chronic dietary risk associated with the proposed use of diflubenzuron was well below the Agency's level of concern for the general U.S. population. In fact, the highest exposed population subgroup (all infants < 1 years of age) is 5.5% of the PAD. The PAD is the Population Adjusted Dose, which is the Reference Dose (RfD) divided by the FQPA Safety Factor. The Agency's level of concern is for exposures in excess of 100% of the PAD. An acute dietary exposure risk assessment was not conducted since no hazard was identified for any population, including infants and children, following a single exposure to diflubenzuron (i.e., no hazard was

identified, therefore, quantification of risk is not required).

*E. Aggregate Risks and Determination of Safety*

To estimate total aggregate exposure to a pesticide from food, drinking water, and residential uses, the Agency calculates DWLOCs which are used as a point of comparison against the model estimates of a pesticide's concentration in water (EECs). DWLOC values are not regulatory standards for drinking water. DWLOCs are theoretical upper limits on a pesticide's concentration in drinking water in light of total aggregate exposure to a pesticide in food and residential uses. In calculating a DWLOC, the Agency determines how much of the acceptable exposure (i.e., the PAD) is available for exposure through drinking water [e.g., allowable chronic water exposure (mg/kg/day) = cPAD - (average food + residential exposure)]. This allowable exposure through drinking water is used to calculate a DWLOC.

A DWLOC will vary depending on the toxic endpoint, drinking water consumption, and body weights. Default body weights and consumption values as used by the USEPA Office of Water are used to calculate DWLOCs: 2L/70 kg (adult male), 2L/60 kg (adult female), and 1L/10 kg (child). Default body weights and drinking water consumption values vary on an individual basis. This variation will be taken into account in more refined screening-level and quantitative drinking water exposure assessments. Different populations will have different DWLOCs. Generally, a DWLOC is calculated for each type of risk assessment used: Acute, short-term, intermediate-term, chronic, and cancer.

When EECs for surface water and groundwater are less than the calculated DWLOCs, OPP concludes with reasonable certainty that exposures to the pesticide in drinking water (when considered along with other sources of exposure for which OPP has reliable data) would not result in unacceptable levels of aggregate human health risk at this time. Because OPP considers the aggregate risk resulting from multiple exposure pathways associated with a pesticide's uses, levels of comparison in drinking water may vary as those uses change. If new uses are added in the future, OPP will reassess the potential impacts of residues of the pesticide in drinking water as a part of the aggregate risk assessment process.

1. *Acute risk*. There is no risk from acute dietary exposure (1 day) to diflubenzuron as there is no toxic endpoint identified.

2. *Chronic risk*. Using the exposure assumptions described in this unit for chronic exposure, EPA has concluded that exposure to diflubenzuron and its metabolite CPU from food will utilize 1% of the cPAD for the U.S. population, 5.5% of the cPAD for infants and 1.2% of the cPAD for children 1–6 years old. Based on the use pattern, chronic residential exposure to residues of diflubenzuron is not expected. In addition, there is potential for chronic dietary exposure to diflubenzuron and its metabolite CPU in drinking water. After calculating DWLOCs and comparing them to the EECs for surface and ground water, EPA does not expect the aggregate exposure to exceed 100% of the cPAD, as shown in Table 5 below.

For the chronic analysis, ARs and %CT information for some commodities were used (Tier 3). The results of the chronic analysis for diflubenzuron indicate that the estimated chronic dietary risk associated with the proposed use of diflubenzuron is below HED's level of concern. The EECs generated by EFED are less than HED's DWLOCs. Thus, chronic non-cancer aggregate risk estimates are below HED's level of concern. Table 5 summarizes the chronic non-cancer aggregate exposure to diflubenzuron residues.

TABLE 5.—AGGREGATE RISK ASSESSMENT FOR CHRONIC (NON- CANCER) EXPOSURE TO DIFLUBENZURON AND CPU

| Scenario/Population Subgroup | cPAD, mg/kg/day | %cPAD (Food) | Ground Water EEC, ppb | Surface Water EEC[1], ppb | Chronic DWLOC[2], ppb |
|---|---|---|---|---|---|
| U.S. population | 0.02 | <1.0 | 0.067 | 9.8 | 700 |
| All infants (<1 year old) | 0.02 | 5.5 | 0.067 | 9.8 | 190 |
| Children (1–6 years old) | 0.02 | 1.2 | 0.067 | 9.8 | 200 |
| Children (7–1 2 years old) | 0.02 | 1.0 | 0.067 | 9.8 | 200 |
| Females (13–50 years old) | 0.02 | <1.0 | 0.067 | 9.8 | 700 |
| Males (13–19 years old) | 0.02 | <1.0 | 0.067 | 9.8 | 700 |
| Males (20+ years old) | 0.02 | < 1.0 | 0.067 | 9.8 | 700 |
| Seniors (55+ years old) | 0.02 | < 1.0 | 0.067 | 9.8 | 700 |

[1] EECs for diflubenzuron + CPU resulting from the worst-case water exposure estimate scenario (peppers).
[2] The chronic DWLOCs were calculated as follows:
DWLOC (µg/L) = maximumwater exposure (mg/kg/day)/consumption (L/day) x 0.001 mg/µg x body weight(kg)

3. *Short-term risk*. Short-term aggregate exposure takes into account residential exposure plus chronic exposure to food and water (considered to be a background exposure level). Diflubenzuron is not registered for use on any sites that would result in substantial residential exposure. Therefore, a short-term aggregate risk assessment was not performed.

4. *Intermediate-term risk*. Intermediate-term aggregate exposure takes into account residential exposure plus chronic exposure to food and water (considered to be a background exposure level). Based on the use pattern, intermediate-term exposure to diflubenzuron would not be expected. Therefore, an intermediate-term aggregate risk assessment was not performed.

5. *Aggregate cancer risk for U.S. population*. As discussed in the Exposure Assessment in Unit. III.C. of this document, CPU is the only metabolite of concern for aggregate cancer risk that is likely to be found in drinking water. For the chronic analysis, ARs and %CT information for some

commodities were used (Tier 3). The results of the cancer analysis indicate that the estimated cancer dietary risk from CPU associated with the proposed use of diflubenzuron is below the Agency's level of concern. Based on a negligible risk in the range of 1-3 x $10^{-6}$, the DWLOCs were calculated to be in the range of 2.2-6.8 µg/L. The EECs for surface water (8.81 µg/L) slightly exceed the DWLOCs.

Since PCA is not found in drinking water, the aggregate cancer risk for PCA is the risk calculated for food only (4.7 x $10^{-7}$).

The Agency used a screening level model designed to estimate pesticide concentrations in surface water. Although the cancer DWLOC is exceeded by the EEC for CPU on peppers, a number of factors lead the Agency to believe that the actual lifetime exposure through drinking water from the metabolite CPU will be less than the cancer DWLOC. An explanation is provided below:

i. The dietary risk for CPU is minimal from mushrooms, milk, and liver. Therefore, the dietary risk from CPU occurs mostly from exposure that results from its formation in the environment and leaching into the surface water as a result of field application.

ii. The PRZM/EXAMS model does not consider the impact of processing (mixing, dilution, or treatment) of raw water for distribution of drinking water and removal of pesticides from source water.

iii. In the absence of reliable monitoring data, a default percent crop area (PCA) factor is applied to the PRZM/EXAMS modeling. Although the DWLOC is exceeded for peppers, the PCA factor of 87% that was used in the assessment is likely to be higher than the actual factor that would be appropriate for peppers in an agricultural watershed.

iv. To address the uncertainties caused by the absence of reliable monitoring data, the applicant has agreed to conduct edge-of-field runoff studies for peppers to monitor the actual concentrations of CPU in surface water. These data, albeit still relevant solely for estimation of residues in raw water and thus still likely to overestimate residues in actual drinking water, are likely to lower the upper bound risk estimate considerably.

6. *Determination of safety*. Based on these risk assessments, EPA concludes that there is a reasonable certainty that no harm will result to the general population, and to infants and children from aggregate exposure to diflubenzuron residues.

## IV. Other Considerations

### *A. Analytical Enforcement Methodology*

Adequate methods are available for the analysis of diflubenzuron, PCA, and CPU in crops. Three enforcement methods for diflubenzuron are published in the Pesticide Analytical Method Volume II (PAM II) as Methods I, II, and III. Method II is a GC/ECD method that can separately determine residues of diflubenzuron, CPU, and PCA in eggs, milk, and livestock tissues. All three methods have undergone a successful petition method validation (PMV) and are acceptable for enforcement purposes. Individual analyte methods for CPU (limit of quantitation (LOQ) of 0.001 ppm) and PCA (LOQ of 0.005 ppm) have been successfully validated by the Analytical Chemistry Branch (ACB).

Multiresidue Method (MRM). The FDA PESTDATA database dated 1/94 (PAM Vol. I, Appendix II) contains no information on diflubenzuron recovery using MRM PAM, Vol. I Sections 302, 303, and 304. However, the registrant has submitted Multiresidue testing data that the Agency has forwarded to the FDA. Also, the results of MRM testing of PCA and CPU have been submitted and forwarded to FDA. Neither PCA nor CPU were adequately recovered by any protocols.

### *B. International Residue Limits*

There are no Codex proposals, Canadian, or Mexican limits for residues of diflubenzuron on rice. A compatibility issue is not relevant to the proposed tolerances.

### *C. Conditions*

Environmental fate. Edge of field monitoring study for peppers.

## V. Conclusion

Therefore, the tolerance is established for combined residues of the insecticide diflubenzuron (N-[[4-chlorophenyl)amino]-carbonyl]-2,6-difluorobenzamide) and its metabolites, 4-chlorophenylurea (CPU) and 4-chloroaniline (PCA), in or on the following raw agricultural commodities: Grass, forage, fodder, and hay group at 6.0 ppm; pepper at 1.0 ppm; stone fruit group (except cherries) at 0.07 ppm; tree nut group at 0.06 ppm; almond hulls at 6.0 ppm; pistachio at 0.06 ppm; cattle, meat byproducts at 0.15 ppm; goat, meat byproducts at 0.15 ppm; hog, meat byproducts at 0.15 ppm; horse, meat byproducts at 0.15 ppm; sheep, meat byproducts at 0.15 ppm. The tolerances for pasture grass and walnut will be deleted, concomitant with the establishment of the tree nut group and grass, forage, fodder, and hay group tolerances.

## VI. Objections and Hearing Requests

Under section 408(g) of the FFDCA, as amended by the FQPA, any person may file an objection to any aspect of this regulation and may also request a hearing on those objections. The EPA procedural regulations which govern the submission of objections and requests for hearings appear in 40 CFR part 178. Although the procedures in those regulations require some modification to reflect the amendments made to the FFDCA by the FQPA of 1996, EPA will continue to use those procedures, with appropriate adjustments, until the necessary modifications can be made. The new section 408(g) provides essentially the same process for persons to ''object'' to a regulation for an exemption from the requirement of a tolerance issued by EPA under new section 408(d), as was provided in the old FFDCA sections 408 and 409. However, the period for filing objections is now 60 days, rather than 30 days.

### *A. What Do I Need to Do to File an Objection or Request a Hearing?*

You must file your objection or request a hearing on this regulation in accordance with the instructions provided in this unit and in 40 CFR part 178. To ensure proper receipt by EPA, you must identify docket control number OPP–2002–0224 in the subject line on the first page of your submission. All requests must be in writing, and must be mailed or delivered to the Hearing Clerk on or before November 18, 2002.

1. *Filing the request*. Your objection must specify the specific provisions in the regulation that you object to, and the grounds for the objections (40 CFR 178.25). If a hearing is requested, the objections must include a statement of the factual issues(s) on which a hearing is requested, the requestor's contentions on such issues, and a summary of any evidence relied upon by the objector (40 CFR 178.27). Information submitted in connection with an objection or hearing request may be claimed confidential by marking any part or all of that information as CBI. Information so marked will not be disclosed except in accordance with procedures set forth in 40 CFR part 2. A copy of the information that does not contain CBI must be submitted for inclusion in the public record. Information not marked confidential may be disclosed publicly by EPA without prior notice.

Mail your written request to: Office of the Hearing Clerk (1900C), Environmental Protection Agency, 1200

Pennsylvania Ave., NW., Washington, DC 20460. You may also deliver your request to the Office of the Hearing Clerk in Rm. 104, Crystal Mall #2, 1921 Jefferson Davis Hwy., Arlington, VA. The Office of the Hearing Clerk is open from 8 a.m. to 4 p.m., Monday through Friday, excluding legal holidays. The telephone number for the Office of the Hearing Clerk is (703) 603–0061.

2. *Tolerance fee payment*. If you file an objection or request a hearing, you must also pay the fee prescribed by 40 CFR 180.33(i) or request a waiver of that fee pursuant to 40 CFR 180.33(m). You must mail the fee to: EPA Headquarters Accounting Operations Branch, Office of Pesticide Programs, P.O. Box 360277M, Pittsburgh, PA 15251. Please identify the fee submission by labeling it ''Tolerance Petition Fees.''

EPA is authorized to waive any fee requirement ''when in the judgement of the Administrator such a waiver or refund is equitable and not contrary to the purpose of this subsection.'' For additional information regarding the waiver of these fees, you may contact James Tompkins by phone at (703) 305–5697, by e-mail at tompkins.jim@epa.gov, or by mailing a request for information to Mr. Tompkins at Registration Division (7505C), Office of Pesticide Programs, Environmental Protection Agency, 1200 Pennsylvania Ave., NW., Washington, DC 20460.

If you would like to request a waiver of the tolerance objection fees, you must mail your request for such a waiver to: James Hollins, Information Resources and Services Division (7502C), Office of Pesticide Programs, Environmental Protection Agency, 1200 Pennsylvania Ave., NW., Washington, DC 20460.

3. *Copies for the Docket*. In addition to filing an objection or hearing request with the Hearing Clerk as described in Unit VI.A., you should also send a copy of your request to the PIRIB for its inclusion in the official record that is described in Unit I.B.2. Mail your copies, identified by docket control number OPP–2002–0224, to: Public Information and Records Integrity Branch, Information Resources and Services Division (7502C), Office of Pesticide Programs, Environmental Protection Agency, 1200 Pennsylvania Ave., NW., Washington, DC 20460. In person or by courier, bring a copy to the location of the PIRIB described in Unit I.B.2. You may also send an electronic copy of your request via e-mail to: opp-docket@epa.gov. Please use an ASCII file format and avoid the use of special characters and any form of encryption. Copies of electronic objections and hearing requests will also be accepted on disks in WordPerfect 6.1/8.0 or ASCII file format. Do not include any CBI in your electronic copy. You may also submit an electronic copy of your request at many Federal Depository Libraries.

*B. When Will the Agency Grant a Request for a Hearing?*

A request for a hearing will be granted if the Administrator determines that the material submitted shows the following: There is a genuine and substantial issue of fact; there is a reasonable possibility that available evidence identified by the requestor would, if established resolve one or more of such issues in favor of the requestor, taking into account uncontested claims or facts to the contrary; and resolution of the factual issues(s) in the manner sought by the requestor would be adequate to justify the action requested (40 CFR 178.32).

## VII. Regulatory Assessment Requirements

This final rule establishes a tolerance under FFDCA section 408(d) in response to a petition submitted to the Agency. The Office of Management and Budget (OMB) has exempted these types of actions from review under Executive Order 12866, entitled *Regulatory Planning and Review* (58 FR 51735, October 4, 1993). Because this rule has been exempted from review under Executive Order 12866 due to its lack of significance, this rule is not subject to Executive Order 13211, *Actions Concerning Regulations That Significantly Affect Energy Supply, Distribution, or Use* (66 FR 28355, May 22, 2001). This final rule does not contain any information collections subject to OMB approval under the Paperwork Reduction Act (PRA), 44 U.S.C. 3501 *et seq.*, or impose any enforceable duty or contain any unfunded mandate as described under Title II of the Unfunded Mandates Reform Act of 1995 (UMRA) (Public Law 104–4). Nor does it require any special considerations under Executive Order 12898, entitled *Federal Actions to Address Environmental Justice in Minority Populations and Low-Income Populations* (59 FR 7629, February 16, 1994); or OMB review or any Agency action under Executive Order 13045, entitled *Protection of Children from Environmental Health Risks and Safety Risks* (62 FR 19885, April 23, 1997). This action does not involve any technical standards that would require Agency consideration of voluntary consensus standards pursuant to section 12(d) of the National Technology Transfer and Advancement Act of 1995 (NTTAA), Public Law 104–113, section 12(d) (15 U.S.C. 272 note). Since tolerances and exemptions that are established on the basis of a petition under FFDCA section 408(d), such as the tolerance in this final rule, do not require the issuance of a proposed rule, the requirements of the Regulatory Flexibility Act (RFA) (5 U.S.C. 601 *et seq.*) do not apply. In addition, the Agency has determined that this action will not have a substantial direct effect on States, on the relationship between the national government and the States, or on the distribution of power and responsibilities among the various levels of government, as specified in Executive Order 13132, entitled *Federalism*(64 FR 43255, August 10, 1999). Executive Order 13132 requires EPA to develop an accountable process to ensure ''meaningful and timely input by State and local officials in the development of regulatory policies that have federalism implications.'' ''Policies that have federalism implications'' is defined in the Executive order to include regulations that have ''substantial direct effects on the States, on the relationship between the national government and the States, or on the distribution of power and responsibilities among the various levels of government.'' This final rule directly regulates growers, food processors, food handlers and food retailers, not States. This action does not alter the relationships or distribution of power and responsibilities established by Congress in the preemption provisions of FFDCA section 408(n)(4). For these same reasons, the Agency has determined that this rule does not have any ''tribal implications'' as described in Executive Order 13175, entitled *Consultation and Coordination with Indian Tribal Governments* (65 FR 67249, November 6, 2000). Executive Order 13175, requires EPA to develop an accountable process to ensure ''meaningful and timely input by tribal officials in the development of regulatory policies that have tribal implications.'' ''Policies that have tribal implications'' is defined in the Executive order to include regulations that have ''substantial direct effects on one or more Indian tribes, on the relationship between the Federal Government and the Indian tribes, or on the distribution of power and responsibilities between the Federal Government and Indian tribes.'' This rule will not have substantial direct effects on tribal governments, on the relationship between the Federal Government and Indian tribes, or on the distribution of power and responsibilities between the Federal Government and Indian tribes, as

specified in Executive Order 13175. Thus, Executive Order 13175 does not apply to this rule.

### VIII. Submission to Congress and the Comptroller General

The Congressional Review Act, 5 U.S.C. 801 *et seq.*, as added by the Small Business Regulatory Enforcement Fairness Act of 1996, generally provides that before a rule may take effect, the agency promulgating the rule must submit a rule report, which includes a copy of the rule, to each House of the Congress and to the Comptroller General of the United States. EPA will submit a report containing this rule and other required information to the U.S. Senate, the U.S. House of Representatives, and the Comptroller General of the United States prior to publication of this final rule in the **Federal Register**. This final rule is not a ''major rule'' as defined by 5 U.S.C. 804(2).

### List of Subjects in 40 CFR Part 180

Environmental protection, Administrative practice and procedure, Agricultural commodities, Pesticides and pests, Reporting and recordkeeping requirements.

Dated: September 11, 2002.

**Peter Caulkins,**

*Acting Director, Registration Division, Office of Pesticide Programs.*

Therefore, 40 CFR chapter I is amended as follows:

## PART 180— [AMENDED]

1. The authority citation for part 180 continues to read as follows:

**Authority:** 21 U.S.C. 321(q), 346(a) and 374.

2. Section 180.377 is amended as follows:

i. By removing the entries for ''Cattle, meat byproducts''; ''Goat, meat byproducts''; ''Hog, meat byproducts''; ''Horse, meat byproducts''; ''Sheep, meat byproducts''; and ''Walnut'' from the table in paragraph (a)(1);

ii. By alphabetically adding the entries for ''Almond, hulls''; ''Cattle, meat byproducts''; ''Fruit, stone, group 12, except cherries''; ''Goat, meat byproducts''; ''Grass, fodder, forage, and hay, group 17''; ''Hog, meat byproducts''; ''Horse, meat byproducts''; ''Nut, tree, group 14''; ''Pepper''; ''Pistachio''; and ''Sheep, meat byproducts'' to the table in paragraph (a)(2); and

iii. By removing the text from paragraph (c) and reserving paragraph (c) with the heading.

The additions and revisions read as follows:

**§ 180.377 Diflubenzuron; tolerances for residues.**

(a) *General.* (1) * * *

(2) * * *

| Commodity | Parts per million |
|---|---|
| Almond , hulls | 6.0 |
| Cattle, meat byproducts | 0.15 |
| Fruit, stone, group 12, except cherries | 0.07 |
| Goat, meat byproducts | 0.15 |
| Grass, forage, fodder, and hay, group 17 | 6.0 |
| Hog, meat byproducts | 0.15 |
| Horse, meat byproducts | 0.15 |
| Nut, tree, group 14 | 0.06 |
| * * * | * * |
| Pepper | 1.0 |
| Pistachio | 0.06 |
| * * * | * * |
| Sheep, meat byproducts | 0.15 |

* * * * *

[FR Doc. 02–23818 Filed 9–18–02; 8:45 am]

BILLING CODE 6560–50–S

## ENVIRONMENTAL PROTECTION AGENCY

## 40 CFR Part 300

**[FRL–7377–4]**

## National Oil and Hazardous Substance Pollution Contingency Plan; National Priorities List

**AGENCY:** Environmental Protection Agency.

**ACTION:** Direct final notice of deletion of the Basic Microelectronics, Incorporated (BMI)-Textron Superfund Site from the National Priorities List.

**SUMMARY:** The Environmental Protection Agency (EPA) Region 4 is publishing a direct final notice of deletion of the BMI-Textron Superfund Site (Site), located in Lake Park, West Palm Beach County, Florida, from the National Priorities List (NPL).

The NPL, promulgated pursuant to section 105 of the Comprehensive Environmental Response, Compensation, and Liability Act (CERCLA) of 1980, as amended, is appendix B of 40 CFR part 300, which is the National Oil and Hazardous Substances Pollution Contingency Plan (NCP). This direct final deletion is being published by EPA with the concurrence of the State of Florida, through the Florida Department of Environmental Protection (FDEP (formerly FDER)) because EPA has determined all appropriate response actions under CERCLA have been completed and, therefore, further remedial action pursuant to CERCLA is not appropriate.

**DATES:** This direct final deletion will be effective November 18, 2002, unless EPA receives adverse comments by October 21, 2002. If adverse comments are received, EPA will publish a timely withdrawal of the direct final deletion in the **Federal Register** informing the public the deletion will not take effect.

**ADDRESSES:** Comments may be mailed to: Jan Martin, Remedial Project Manager (RPM), U.S. EPA, Region 4 (4WD–SSMB), 61 Forsyth Street, SW., Atlanta, Georgia 30303, (404) 562–8593, *martin.jan@epa.gov.*

*Information Repositories:* Comprehensive information about the Site is available for viewing and copying at the Site information repositories located at:

U.S. EPA Record Center, 61 Forsyth Street, SW., Atlanta, Georgia 30365, Phone: (404) 562–8190, Hours: 8 a.m. to 5 p.m., Monday through Friday (By Appointment Only).

Lake Park Library, 529 Park Avenue, Lake Park, Florida 30403, Phone: (561) 881–3330, Hours: 9 a.m. to 8:30 p.m., Monday and Tuesday, 9 a.m. to 5:30 p.m., Wednesday through Friday, 9:30 a.m. to 2 p.m., Saturday.

**FOR FURTHER INFORMATION CONTACT:** Jan Martin, Remedial Project Manager (RPM), U.S. EPA, Region 4 (4WD–SSMB), 61 Forsyth Street, SW., Atlanta, Georgia 30303, (404) 562–8593, *martin.jan@epa.gov.*

**SUPPLEMENTARY INFORMATION:**

**Table of Contents**

I. Introduction
II. NPL Deletion Criteria
III. Deletion Procedures
IV. Basis for Site Deletion
V. Deletion Action

### I. Introduction

EPA Region 4 is publishing this direct final notice of deletion of the BMI-Textron Superfund Site (Site) from the NPL. The EPA identifies sites that appear to present a significant risk to public health or the environment and maintains the NPL as the list of those sites. As described in the § 300.425(e)(3) of the NCP, sites deleted from the NPL remain eligible for remedial actions if conditions at a deleted site warrant such action.

Because EPA considers this action to be noncontroversial and routine, EPA is taking it without prior publication of a notice of intent to delete. This action will be effective November 18, 2002, unless EPA receives adverse comments by October 21, 2002, on this document.

If adverse comments are received within the 30-day public comment period on this document, EPA will publish a timely withdrawal of this direct final deletion before the effective date of the deletion and the deletion will not take effect. EPA will, as appropriate, prepare a response to comments and continue with the deletion process on the basis of the notice of intent to delete and the comments already received. There will be no additional opportunity to comment.

Section II of this document explains the criteria for deleting sites from the NPL. Section III discusses procedures EPA is using for this action. Section IV discusses the BMI-Textron, Superfund Site and demonstrates how it meets the deletion criteria. Section V discusses EPA's action to delete the Site from the NPL unless adverse comments are received during the public comment period.

## II. NPL Deletion Criteria

Section 300.425(e) of the NCP provides that releases may be deleted from the NPL where no further response is appropriate. In making a determination to delete a Site from the NPL, EPA shall consider, in consultation with the State, whether any of the following criteria have been met:

i. Responsible parties or other persons have implemented all appropriate response actions required;

ii. All appropriate Fund-financed (Hazardous Substance Superfund Response Trust Fund) response under CERCLA has been implemented, and no further response action by responsible parties is appropriate; or

iii. The remedial investigation has shown the release poses no significant threat to public health or the environment and, therefore, the taking of remedial measures is not appropriate.

Even if a site is deleted from the NPL, where hazardous substances, pollutants, or contaminants remain at the deleted site above levels that allow for unlimited use and unrestricted exposure, CERCLA section 121(c), 42 U.S.C. 9621(c) requires a subsequent review of the site be conducted at least every five years after the initiation of the remedial action at the deleted site to ensure the action remains protective of public health and the environment. If new information becomes available which indicates a need for further action, EPA may initiate remedial actions. Whenever there is a significant release from a site deleted from the NPL, the deleted site may be restored to the NPL without application of the hazard ranking system.

## III. Deletion Procedures

The following procedures apply to deletion of the Site:

1. The EPA consulted with the State of Florida on the deletion of the Site from the NPL prior to developing this direct final notice of deletion.

2. Florida concurred with deletion of the Site from the NPL.

3. Concurrently with the publication of this direct final notice of deletion, a notice of the availability of the parallel notice of intent to delete published today in the ''Proposed Rules'' section of the **Federal Register** is being published in a major local newspaper of general circulation at or near the Site and is being distributed to appropriate federal, state, and local government officials and other interested parties; the newspaper notice announces the 30-day public comment period concerning the notice of intent to delete the Site from the NPL.

4. The EPA placed copies of documents supporting the deletion in the Site information repositories identified above.

5. If adverse comments are received within the 30-day public comment period on this document, EPA will publish a timely notice of withdrawal of this direct final notice of deletion before its effective date and will prepare a response to comments and continue with the deletion process on the basis of the notice of intent to delete and the comments already received.

Deletion of a site from the NPL does not itself create, alter, or revoke any individual's rights or obligations. Deletion of a site from the NPL does not in any way alter EPA's right to take enforcement actions, as appropriate. The NPL is designed primarily for informational purposes and to assist EPA management. Section 300.425(e)(3) of the NCP states the deletion of a site from the NPL does not preclude eligibility for future response actions, should future conditions warrant such actions.

## IV. Basis for Site Deletion

*Site Location*

The Basic Microelectronics, Incorporated (BMI)-Textron Site (Site) is an inactive 3.5 acre industrial site located within the Tri-City Industrial Park on Silver Beach Road in Lake Park, Palm Beach County, Florida. The Site consists of parcels 1 through 14 in Section C of the Tri-City Industrial Park. The boundaries include: Newman Road to the north, Silver Beach Road to the south, Reed Road to the east and Miller Way to the west. Adjacent properties on the north, east and west are businesses and industrial sites. Residential areas are to the south.

*Site Background and History*

Basic Microelectronics, Inc. began operations at the site in 1969. Textron, Inc. acquired Basic Microelectronics in 1981 and began operating as BMI-Textron. The company's main product was chrome backed glass plates which were used in the production of electronic components. During company operations, the Site included 6 domestic waste drain fields, 3 percolation ponds, 2 septic tanks, and settling basins. The present Site includes storage warehouses and small workshops. Most of the land is either paved or covered by buildings.

During site operations liquid waste from the process was disposed of on-site through a combination of percolation ponds and drain fields. The wastewater system was operated under a Florida Department of Environmental Regulation (FDER) permit. Prior to 1984, cyanide wastes were disposed of in Percolation Pond 1. This pond was abandoned in 1984. Hazardous wastes from facility operations were disposed of off-site at approved facilities.

In 1981, BMI-Textron obtained a FDER construction permit for a drain field for wastewater disposal. Four monitoring wells were installed as a permit requirement. The wastewater included chromium stripping operations wastewater, process wastewater from glass cleaning, coating, polishing and rinse waters, wastewater from a reverse osmosis water purification plant and domestic sanitary wastewater.

EPA and the Florida Department of Environmental Regulation (FDER) conducted several investigations and took enforcement actions between 1984 and 1990. These investigations/actions included:

1. A 1984 soil and groundwater assessment of percolation pond 1 revealed cyanide contamination and resulted in a consent order to remove contaminated soils from percolation pond 1.

2. A 1985–86 soil and groundwater assessment of percolation pond 2 revealed cyanide, nitrate and fluoride contamination.

3. A 1986 soil assessment of percolation pond 3 and the Reverse Osmosis drain field revealed cyanide, nitrate and fluoride contamination.

4. In 1987, a groundwater and soil investigation revealed barium, chromium and cyanide contamination. EPA investigated the site for placement on the NPL. The Groundwater Route

score was the major factor in the hazard ranking score of 37.93.

5. In 1988, FDER issued a consent order. Under this consent order, a soil investigation revealed cyanide, fluoride, nitrate and chromium contamination in the area of percolation pond 2.

In 1990, an *Interim Remedial Action Soil Disposal Plan* was approved by FDER. Soils from percolation pond 2 were removed and disposed of under this plan. The area of percolation pond 3 was backfilled with 4 feet of material and capped with asphalt.

*Remedial Investigation and Feasibility Study (RI/FS)*

In August 1990, the Site was listed on the NPL. In June 1992, BMI-Textron entered into an Administrative Order (AO) by consent with EPA to conduct a RI/FS. The RI/FS was conducted in 2 phases between February 1993 and August 1994. The results of the Remedial Investigation (RI) can be summarized as follows:

1. Groundwater was identified as the principal media of concern at the Site.
2. Groundwater at the Site was contaminated with elevated levels of arsenic, sodium, cyanide and fluoride, *i.e.* the Contaminants of Concern (COC).
3. Groundwater contamination was present only in the shallow aquifer in the northeast portion of the site.
4. Contaminated groundwater had not migrated off-site.
5. There were no private water wells near the site.
6. Surface water bodies were not impacted.
7. Air contamination was not a concern because most of the site was paved and the COCs were not present in surface soils.
8. No impacts to local plants and animals were expected or evaluated because of the industrial nature of the site.

The Feasability Study (FS) resulted in several important points:

1. Previous soil excavations at percolation ponds 1 and 3 effectively remediated contaminated soils at these areas.
2. Soils remaining at the site did not pose a threat to groundwater quality.
3. The restriction of groundwater contamination to the upper surficial aquifer zone of percolation ponds 1 and 2 indicated a lack of vertical migration of the COCs and a lack of connectivity between the upper and intermediate aquifers.
4. Arsenic, sodium, cyanide and fluoride were detected at concentrations above Florida drinking water standards and required remedial action.
5. Potential cleanup criteria for these COCs were established.

The FS compared 4 remedial alternatives with available technologies and appropriate regulations.

*Record of Decision*

On August 11, 1994, EPA signed a Record of Decision (ROD) for the Site. The ROD describes the contamination and the remedy selected to address the Site.

In regard to use of the Site in 1994, the ROD determined there was no risk to human health based on the ''then current use'' of the site. The RI had determined the potable wells in the vicinity of the Site and down gradient were not contaminated from Site operations. The ROD determined groundwater was the only possible medium available for human contact with COCs on-site and off-site.

A future, hypothetical worst-case exposure scenario for groundwater was also considered. In the scenario, use of contaminated groundwater as a potable water source by future residents was considered. The cumulative, carcinogenic and non-carcinogenic risks associated with such use was determined to be unacceptable.

The primary remedial objective stated in the ROD was to remediate COCs to drinking water standards, *i.e.* Maximum Contaminant Levels (MCLs). Prior site data indicated natural attenuation of COCs in groundwater was already occurring at the Site. As the remedy, EPA chose natural attenuation of the COC (arsenic, cyanide, fluoride, and sodium) concentrations with groundwater monitoring to ensure drinking water MCLs were achieved through natural attenuation. The selected remedy involved:

1. Quarterly groundwater monitoring for one year including submission of quarterly monitoring reports,
2. Annual groundwater data review and monitoring frequency by the EPA for the remaining two years,
3. Use of existing institutional controls to protect against possible exposure to COCs (*i.e.* requirements for obtaining well permits from FDEP),
4. Use of existing wells for groundwater monitoring to ensure natural attenuation was occurring (a total of 30 wells existed on and off site), and
5. Site security (fenced area and locked gate).

The institutional controls described in the ROD included established regional well controls and use of existing well permitting regulations administered through the South Florida Water Management Department (SFWMD), the Palm Beach County Health Department (PBCHD) and FDEP.

In March 1995, a Groundwater Monitoring Work Plan (Groundwater Monitoring Plan) was approved which required three years of groundwater monitoring, with provisions for more monitoring if needed. The Groundwater Monitoring Plan selected 8 of the existing wells, 4 on-site and 4 off-site, for use as monitoring wells. The on-site wells were located in areas where RI sample data indicated contaminant levels had exceeded drinking water standards. The off-site wells were used to monitor for off-site migration of groundwater contamination. Under the terms of the Groundwater Monitoring Plan, all 8 wells were to be sampled for the COCs, *i.e.* fluoride, total cyanide, sodium and arsenic until the sample concentration met MCLs for 2 consecutive sampling events. After those 2 consecutive events, sampling could cease at the wells meeting the drinking water standards. Sampling at the Site continued until MCLs were met for all COCs at all 8 wells. The last sampling event occurred in July 2000.

Monitoring reports were submitted for sampling in April 1995, July 1995, October 1995, January 1996, July 1996, January 1997, July 1997 and January 1998, January 2000, April 2000 and July 2000. According to the data in these reports the MCLs have been achieved and the Remedial Action Objectives (RAOs) met.

*Five-Year Review*

A five-year review of the remedy was performed in June 2000 in accordance with EPA policy. The review findings are contained in the Final Superfund Five-Year Review Report which concluded the selected remedy remained protective of human health and the environment. Sampling data from groundwater monitoring reports demonstrated natural attenuation of COCs had occurred.

Attainment of the remedial goal for arsenic of 0.05 mg/L in the groundwater at the Site was first reported in the results from the April 1995 monitoring event. Additional monitoring events were performed after the initial attainment to ensure the arsenic in site groundwater met the remedial goal. The last sampling for arsenic was in January 1996.

Attainment of the remedial goal for sodium of 160 mg/L in the groundwater at the Site was first reported in the results from the January 1997 monitoring event. Two additional monitoring events were performed after the initial attainment to ensure the sodium in site groundwater met the remedial goal. The last sampling for sodium was in January 1998.

Attainment of the remedial goal for fluoride of 4 mg/L in the groundwater at the Site was first reported in the results from the October 1998 monitoring event. Two additional monitoring events were performed after the initial attainment to ensure the fluoride in site groundwater met the remedial goal. The last sampling for fluoride was in July 2000.

Attainment of the remedial for cyanide of 0.2 mg/L in the groundwater at the Site was reported in the results from January 2000 monitoring event. Two additional monitoring events were performed after the initial attainment to ensure the cyanide in site groundwater met the remedial goal. The drinking water standard for cyanide is based on the amenable cyanide concentration. The last sampling for cyanide was in July 2000.

EPA, with concurrence of FDEP, has determined all appropriate actions at the BMI-Textron Site, have been completed, and no further remedial action is necessary. Water well permitting regulations continue to be administered through the South Florida Water Management Department, the Palm Beach County Health Department and FDEP.

*Final Project Closeout Activities*

Between January 31, 2001 and February 15, 2001, Arcadis, Geragthy & Miller completed a final site inspection and closeout activities to ensure all associated equipment and items used to complete the site remedy were removed from the property and properly disposed of or properly abandoned.

On January 31, 2001 Arcadis, Geragthy & Miller observed and documented the proper abandonment (grouting of wells with neat cement, using a tremie pipe, from the bottom of the well to land surface) of 7 of the 8 remaining on and off-site monitoring wells (3, 35R, 36A, 37, 38, MW–93–4 and MW–93–6) by a state-licensed drilling contractor. Monitoring well 10A was not abandoned because it is part of a three-well cluster initially installed / owned by the FDEP which may be useful for monitoring groundwater in the area of the nearby Transcircuit Superfund site. The steel protective casings extending above grade on two of the wells were cut off a few inches below grade and the ground surface re-paved.

On February 15, 2001, Arcadis, Geragthy & Miller observed and documented the removal of the two above-ground steel storage tanks (ASTs) from the property. These ASTs were used over the past several years for the storage of water purged from the monitoring wells.

*Community Involvement*

Public participation activities have been satisfied as required in CERCLA section 113(k), 42 U.S.C. 9613(k), and CERCLA section 117, 42 U.S.C. 9617. Documents in the deletion docket which EPA relied on for recommendation of the deletion from the NPL are available to the public in the information repositories.

**V. Deletion Action**

The EPA, with concurrence of the State of Florida, has determined all appropriate responses under CERCLA have been completed, and no further response actions under CERCLA are necessary. Therefore, EPA is deleting the Site from the NPL.

Because EPA considers this action to be noncontroversial and routine, EPA is taking it without prior publication. This action will be effective November 18, 2002, unless EPA receives adverse comments by October 21, 2002. If adverse comments are received within the 30-day public comment period, EPA will publish a timely withdrawal of this direct final notice of deletion before the effective date of the deletion and it will not take effect and, EPA will prepare a response to comments and continue with the deletion process on the basis of the notice of intent to delete and the comments already received. There will be no additional opportunity to comment.

**List of Subjects in 40 CFR Part 300**

Environmental protection, Air pollution control, Chemicals, Hazardous waste, Hazardous substances, Intergovernmental relations, Penalties, Reporting and recordkeeping requirements, Superfund, Water pollution control, Water supply.

Dated: July 19, 2002,

**A. Stanley Meiburg,**

*Acting Regional Administrator, Region 4.*

For the reasons set out in this document, 40 CFR part 300 is amended as follows:

## PART 300—[AMENDED]

1. The authority citation for part 300 continues to read as follows:

**Authority:** 33 U.S.C. 1321(c)(2); 42 U.S.C. 9601–9657; E.O. 12777, 56 FR 54757, 3 CFR, 1991 Comp., p. 351; E.O. 12580, 52 FR 2923, 3 CFR, 1987 Comp., p. 193.

**Appendix B—[Amended]**

2. Table 1 of Appendix B to Part 300 is amended under Florida (FL) by removing the entry for ''BMI-Textron'' and the city ''Lake Park.''

[FR Doc. 02–23586 Filed 9–18–02; 8:45 am]

BILLING CODE 6560–50–P

## DEPARTMENT OF TRANSPORTATION

### National Highway Traffic Safety Administration

### 49 CFR Part 572

**[Docket No. NHTSA–02–12541]**

**RIN 2127–AI00**

## Anthropomorphic Test Devices; Six-Year-Old Crash Test Dummy

**AGENCY:** National Highway Traffic Safety Administration (NHTSA), Department of Transportation.

**ACTION:** Final rule; correcting amendment.

**SUMMARY:** This document makes technical corrections to the final rule published in response to petitions for reconsideration on July 18, 2002. That rule amended an earlier rule, published on January 13, 2000, that had adopted a new, more advanced 6-year-old child dummy (HIII–6C). The changes made in today's notice consist of corrections of typographical errors in the table in the preamble, the addition of a revised Figure N5, and minor revisions in the weight and length specifications of the head skin and upper arm molded assembly, respectively.

**DATES:** *Effective Date:* The amendments made in this rule are effective August 19, 2002.

*Petitions:* Petitions for reconsideration must be received by November 4, 2002.

**ADDRESSES:** Petitions for reconsideration should refer to the docket and notice number of this document and be submitted to: Administrator, National Highway Traffic Safety Administration, 400 Seventh Street, SW., Washington, DC 20590.

**FOR FURTHER INFORMATION CONTACT:** For non-legal issues, you may call Stan Backaitis, Office of Crashworthiness Standards, at 202–366–4912.

For legal issues, you may call Rebecca MacPherson, Office of the Chief Counsel, at 202–366–2992.

You may send mail to both of these officials at National Highway Traffic Safety Administration, 400 Seventh St., SW., Washington, DC 20590.

**SUPPLEMENTARY INFORMATION:** NHTSA published a final rule on July 18, 2002 (67 FR 47321, Docket No. NHTSA–02–12541) that responded to various petitions for reconsideration of its

previous rule incorporating a new, Hybrid III 6-year-old child anthropomorphic test dummy (HIII–6C) into 49 CFR part 572. That final rule was published January 13, 2000 (65 FR 2059, Docket No. NHTSA–99–6714). The petitions were granted in part and denied in part.

Most of the issues raised in the petitions were minor and involved technical changes to either the dummy specifications or to the drawing package. In some cases, the petitioners had requested the specifications be tightened to ensure more accurate measurements in the tests in which the dummy is used to measure injury criteria. More significant issues were raised regarding the thoracic peak force criteria, the need for a specified mass moment of inertia (MMI) and resonant frequency of the impactors, and the need for a post-test calibration. Our review of the petitions also uncovered several minor errors in the drawings package that were resolved. All these issues were addressed in the July 18, 2002 final rule.

We are issuing a correcting amendment because that document contained a few technical errors. Namely, we inadvertently failed to submit the amended Figure N5 when the final rule was forwarded to the **Federal Register** for publication, and Table 1 of the preamble contained two typographical errors and two omissions. While Table 1 is not part of the regulatory text, and the changes to that table in this notice will have no effect on what is ultimately published in the Code of Federal Regulations, we have decided to amend the table since it provides a quick reference of those changes to the drawing package incorporated by reference into 49 CFR part 572, subpart N.

**Changes in ''N'' Figures**

As noted in the preamble to the July 2002 final rule, the following changes were made to the figures included as part of 49 CFR 572, subpart N to correct inaccuracies or ambiguities in those figures.

- Figure N2: (1) Relocate the 26.1 mm reference to the centerline of the posterior attachment bolt to reflect dimensional proportionality; (2) change reference from ''Neck Flexion Pendulum 46 CFR§ 572.33 FIG 22'' to ''Neck Flexion Pendulum 49 CFR 572.33 FIG 22''; and (3) add part number for bolt ''#9001265 Screw, SHCS #10–24 x 7/16''.
- Figure N3: (1) Relocate the 26.1 mm reference to the centerline of the posterior attachment bolt to reflect dimensional proportionality; and (2) add part number for bolt ''#9001265 Screw, SHCS #10–24 x 7/16''.
- Figure N5: Change bracket dimensions from ''89.9 mm (3.54 in) x 161.3 mm (6.35 in) x 31.8 mm (1.251 in)'' to ''90.4 mm (3.56 in) x 175.5 mm (6.91 in) x 31.8 mm (1.25 in)''.
- Figure N6: (1) Remove note SA572–S4; and (2) change the weight tolerance on the knee probe from ''0.82 ± 0.01 kg (1.80 ± .02 lb)'' to ''0.82 ± 0.02 kg (1.80 ± .05 lb)''.

No changes were made to Figure N1. Figure N1, rather than Figure N5 was inadvertently sent to the **Federal Register** as part of the final rule. Accordingly, the changes that were made to figure N5 do not appear in the revised regulatory text. Today's amendment corrects that error.

**Errors and Corrections in Drawings**

In responding to the petitions for reconsideration, several minor inconsistencies and call-out errors were noted either by petitioners or by agency staff in the review process. Accordingly, the changes that were made to the drawing package were noted in Table 1 of the final rule. That table contained two typographical errors, one under item 127–8210 and the other under item SA 572–S50, which are corrected here. Additionally, just before publication of the final rule, we discovered two errors in the drawings package that were not identified in Table 1: to wit, the head skin weight specification in drawing 127–1008 was changed from 1.78 ± .05 lbs to 1.55 ± .05 lbs, and the molded length specification for the upper arm molded assembly in drawing 127–5001 was revised from 5.24 in to 4.6 in. While these errors were not discussed in the final rule, they were corrected prior to publication of the final rule. Accordingly, both the drawings package sent to Reprographic Technologies and the one placed on public display at NHTSA technical reference library were correct. There is no need for purchasers of the drawing package to repurchase the package. Table 1 is recreated in whole so that readers may refer to a single, correct table.

TABLE 1

| Drawing/part No. | Description | Revision description |
|---|---|---|
| 127–SBL | 6 year H3 standard build level | Deleted drawing. |
| SA572–127DRL–1 | Drawing revision list | New drawing. |
| 127-0000 | Hybrid III 6 year old complete assembly. | Corrected location of ''I'' dimension (on sheet 5 of 6), all sheets revised to change letter''K''. |
| 127–1008 | 6 year H3 head skin | Changed weight specification of head skin from 1.78 ± .05 lbs to 1.55 ± .05 lbs. |
| 127–1009 | Skin cap, skull | Added ''reference'' to item 1, corrected title. |
| 127–2011 | Sternum pad | Corrected angle dimensions. |
| 127–2550 | Chest-accelerometer assembly (SA572–S4). | Corrected accelerometer mount drawing number from 127–2110 to 127–2150. |
| 127–4002 | Upper leg flesh | Defined angular orientation of 0.5 dia. ''Posts''; Assigned missing hole diameters for load cell installation. |
| 127–5001 | 6 year H3 upper arm molded assembly. | Changed upper arm molded length specification from 5.24 in. to 4.6 in. |
| 127–8210 | 6 yr old abdominal insert | Changed dimension from 1.90 to 1.40 (notch depth), changed dimension 4.30 to 3.81 (overall height). |
| SA572–S4 | Uniaxial piezorestive accelerometer. | Changed single decimal place tolerance from ± 0.1/2.54 to ± 0.1/2.5, corrected metric equivalents, and added dimensions. |
| SA572–S10 | Femur load cell | Revised tolerance format, changed single decimal place tolerance from ± 0.1/2.54 to ± 0.1/2.5, changed reference note from ''Subpart E'' to ''Subpart N'', added material note, changed output at capacity from 1 mV/V min. to 0.75 mV/V min., added ''weight includes * * *'' note, and removed ''+'' from the Fz axis. |
| SA572–S11 | Upper neck load cell | Revised tolerance format, changed single decimal place tolerance from ± 0.1/2.54 to ± 0.1/2.5, added material note, changed output at capacity from 1 mV/V min. to 0.75 mV/V min. |

TABLE 1—Continued

| Drawing/part No. | Description | Revision description |
|---|---|---|
| SA572–S12 | Lumbar load cell | Changed hole dimension from 0.75/.1905 × .37/.89 to 0.63/16.0 × .35/8.9, changed weight from 1.3 lb/0.59 kg max to 1.35 lb/0.61 kg max, revised tolerance format, changed single decimal place tolerance from ± 0.1/2.54 to ± 0.1/2.5, changed reference note from ''Subpart E'' to ''Subpart N'', added material note, changed output at capacity from 1 mV/V min. to 0.75 mV/V min., added ''weight includes . . . '' note, and revised hole dimensions. |
| SA572–S13–L&R | Anterior-superior iliac spine load cell. | Changed output at capacity from 1 mV/V min. to 0.75 mV/V min., revised tolerance format, changed reference note from ''Subpart E'' to ''Subpart N'', added material note, changed single decimal place tolerance from ± 0.1/2.54 to ± 0.1/2.5, and added ''weight includes . . .'' note. |
| SA572–S26 | Lower neck load cell | Revised tolerance format, changed single decimal place tolerance from ± 0.1/2.54 to ± 0.1/2.5, added material note, changed output at capacity from 1 mV/V min. to 0.75 mV/V min., added ''(does not include cables)'' to the weight note, added hole dimensions, and changed reference note from subpart E to subpart N. |
| SA572–S50 | Chest potentiometer | Changed single decimal tolerance from ± 0.1/2.54 to ± 0.1/2.5, added/corrected metric equivalents, added ''Dia. Of hard shell housing'' and ''in rotary rigid shaft'' to notes, added ''signal connector pins'' note, and added ''locating'' and ''Dia.'' to pin note. |
| SA572–S80 | S4 triaxial accelerometer mounting block. | Changed single decimal place tolerance from ± 0.1/2.54 to ± 0.1/2.5, corrected metric equivalents, revised hole note, and relocated holes. |
| TE–2208–001 | Neck adapter bracket—6 year old | Added part #9001265 and note #3, changed single decimal place tolerance from ± 0.1/2.54 to ± 0.1/2.5. |
| 9001373 | Bushing, shoulder | New drawing. |
| 9000000 & 6000000 | Hardware used on 3YR. 6YR. & 5th female. | Added part #9001265, removed part #9001373. |

## Regulatory Analyses and Notices

*Executive Order 12866 and DOT Regulatory Policies and Procedures*

Executive Order 12866, ''Regulatory Planning and Review'' (58 FR 51735, October 4, 1993), provides for making determinations whether a regulatory action is ''significant'' and therefore subject to Office of Management and Budget (OMB) review and to the requirements of the Executive Order. The Order defines a ''significant regulatory action'' as one that is likely to result in a rule that may:

(1) Have an annual effect on the economy of $100 million or more or adversely affect in a material way the economy, a sector of the economy, productivity, competition, jobs, the environment, public health or safety, or State, local, or Tribal governments or communities;

(2) Create a serious inconsistency or otherwise interfere with an action taken or planned by another agency;

(3) Materially alter the budgetary impact of entitlements, grants, user fees, or loan programs or the rights and obligations of recipients thereof; or

(4) Raise novel legal or policy issues arising out of legal mandates, the President's priorities, or the principles set forth in the Executive Order.

We considered the impact of the July 18, 2002 rulemaking action under Executive Order 12866 and the Department of Transportation's regulatory policies and procedures. This rule is not considered a significant regulatory action under section 3(f) of the Executive Order 12866. Consequently, it was not reviewed by the Office of Management and Budget under E.O. 12866, ''Regulatory Planning and Review.'' The rulemaking action is also not considered to be significant under the Department's Regulatory Policies and Procedures (44 FR 11034, February 26, 1979). Today's notice does not impose any new requirements on manufacturers. It simply corrects typographical errors and adds information to a table that is not part of the regulatory text and adds the correct amended figure to the regulatory text.

*Executive Order 13132*

Executive Order 13132 requires NHTSA to develop an accountable process to ensure ''meaningful and timely input by State and local officials in the development of regulatory policies that have federalism implications.'' ''Policies that have federalism implications'' is defined in the Executive Order to include regulations that have ''substantial direct effects on the States, on the relationship between the national government and the States, or on the distribution of power and responsibilities among the various levels of government.'' Under Executive Order 13132, the agency may not issue a regulation with Federalism implications, that imposes substantial direct compliance costs, and that is not required by statute, unless the Federal government provides the funds necessary to pay the direct compliance costs incurred by State and local governments, the agency consults with State and local governments, or the agency consults with State and local officials early in the process of developing the proposed regulation. NHTSA also may not issue a regulation with Federalism implications and that preempts State law unless the agency consults with State and local officials early in the process of developing the proposed regulation. As explained above, today's notice will not have any additional economic impact on any entities.

*Executive Order 13045*

Executive Order 13045 (62 FR 19885, April 23, 1997) applies to any rule that: (1) is determined to be ''economically significant'' as defined under E.O. 12866, and (2) concerns an environmental, health or safety risk that NHTSA has reason to believe may have a disproportionate effect on children. If the regulatory action meets both criteria, we must evaluate the environmental health or safety effects of the planned rule on children, and explain why the planned regulation is preferable to other potentially effective and reasonably feasible alternatives considered by us.

This rule is not subject to the Executive Order because it is not economically significant as defined in E.O. 12866. It does indirectly involve decisions based on health risks that disproportionately affect children, namely, the risk of deploying air bags to children. However, this rulemaking

serves to help vehicle and air bag manufacturers to take steps to reduce that risk.

*Executive Order 12778*

Pursuant to Executive Order 12778, ''Civil Justice Reform,'' we have considered whether this rule will have any retroactive effect. This rule does not have any retroactive effect. A petition for reconsideration or other administrative proceeding will not be a prerequisite to an action seeking judicial review of this rule. This rule does not preempt the states from adopting laws or regulations on the same subject, except that it does preempt a state regulation that is in actual conflict with the federal regulation or makes compliance with the Federal regulation impossible or interferes with the implementation of the federal statute.

*Regulatory Flexibility Act*

Pursuant to the Regulatory Flexibility Act (5 U.S.C. 601 *et seq.*, as amended by the Small Business Regulatory Enforcement Fairness Act (SBREFA) of 1996) whenever an agency is required to publish a notice of rulemaking for any proposed or final rule, it must prepare and make available for public comment a regulatory flexibility analysis that describes the effect of the rule on small entities (*i.e.*, small businesses, small organizations, and small governmental jurisdictions). However, no regulatory flexibility analysis is required if the head of an agency certifies the rule will not have a significant economic impact on a substantial number of small entities. SBREFA amended the Regulatory Flexibility Act to require Federal agencies to provide a statement of the factual basis for certifying that a rule will not have a significant economic impact on a substantial number of small entities.

I have considered the effects of this rulemaking action under the Regulatory Flexibility Act (5 U.S.C. 601 *et seq.*) and certify that this proposal will not have a significant economic impact on a substantial number of small entities. The amendments made in this document will not affect the cost of the dummy. The rule does not impose or rescind any requirements for anyone. The Regulatory Flexibility Act does not, therefore, require a regulatory flexibility analysis.

*National Environmental Policy Act*

We have analyzed this amendment for the purposes of the National Environmental Policy Act and determined that it will not have any significant impact on the quality of the human environment.

*Paperwork Reduction Act*

Under the Paperwork Reduction Act of 1995, a person is not required to respond to a collection of information by a Federal agency unless the collection displays a valid OMB control number. This rule does not propose any new information collection requirements.

*National Technology Transfer and Advancement Act*

Section 12(d) of the National Technology Transfer and Advancement Act of 1995 (NTTAA), Public Law 104–113, section 12(d) (15 U.S.C. 272) directs us to use voluntary consensus standards in its regulatory activities unless doing so would be inconsistent with applicable law or otherwise impractical. Voluntary consensus standards are technical standards (*e.g.*, materials specifications, test methods, sampling procedures, and business practices) that are developed or adopted by voluntary consensus standards bodies, such as the Society of Automotive Engineers (SAE). The NTTAA directs us to provide Congress, through OMB, explanations when we decide not to use available and applicable voluntary consensus standards.

The H–III6C dummy that is the subject of this document was developed under the auspices of the SAE. All relevant SAE standards were reviewed as part of the development process. The following voluntary consensus standards have been used in developing the dummy:

- SAE Recommended Practice J211–1995, ''Instrumentation for Impact Tests—Parts 1 and 2'', dated March, 1995; and
- SAE J1733 Information Report, titled ''Sign Convention for Vehicle Crash Testing'', dated December 1994.

*Unfunded Mandates Reform Act*

Section 202 of the Unfunded Mandates Reform Act of 1995 (UMRA) requires Federal agencies to prepare a written assessment of the costs, benefits and other effects of proposed or final rules that include a Federal mandate likely to result in the expenditure by State, local or tribal governments, in the aggregate, or by the private sector, of more than $100 million in any one year (adjusted for inflation with base year of 1995). Before promulgating a NHTSA rule for which a written statement is needed, section 205 of the UMRA generally requires us to identify and consider a reasonable number of regulatory alternatives and adopt the least costly, most cost-effective or least burdensome alternative that achieves the objectives of the rule. The provisions of section 205 do not apply when they are inconsistent with applicable law. Moreover, section 205 allows us to adopt an alternative other than the least costly, most cost-effective or least burdensome alternative if we publish with the final rule an explanation why that alternative was not adopted.

This rule does not impose any unfunded mandates under the Unfunded Mandates Reform Act of 1995. This rule does not meet the definition of a Federal mandate because it does not impose requirements on anyone. Further, it will not result in costs of $100 million or more to either State, local, or tribal governments, in the aggregate, or to the private sector. The amendments made in this document will not affect the cost of the dummy. Thus, this rule is not subject to the requirements of sections 202 and 205 of the UMRA.

*Regulation Identifier Number (RIN)*

The Department of Transportation assigns a regulation identifier number (RIN) to each regulatory action listed in the Unified Agenda of Federal Regulations. The Regulatory Information Service Center publishes the Unified Agenda in April and October of each year. You may use the RIN contained in the heading at the beginning of this document to find this action in the Unified Agenda.

**List of Subjects in 49 CFR Part 572**

Incorporation by reference, Motor vehicle safety.

In consideration of the foregoing, NHTSA amends 49 CFR Part 572 as follows:

## PART 572—ANTHROPOMORPHIC TEST DUMMIES

1. The authority citation for Part 572 continues to read as follows:

**Authority:** 49 U.S.C. 322, 30111, 30115, 30117 and 30166; delegation of authority at 49 CFR 1.50.

2. By revising Figure N5 to Subpart N to read as follows:

**Figures to Subpart N**

* * * * *

FIGURE N 5

TORSO FLEXION TEST SET-UP SPECIFICATIONS

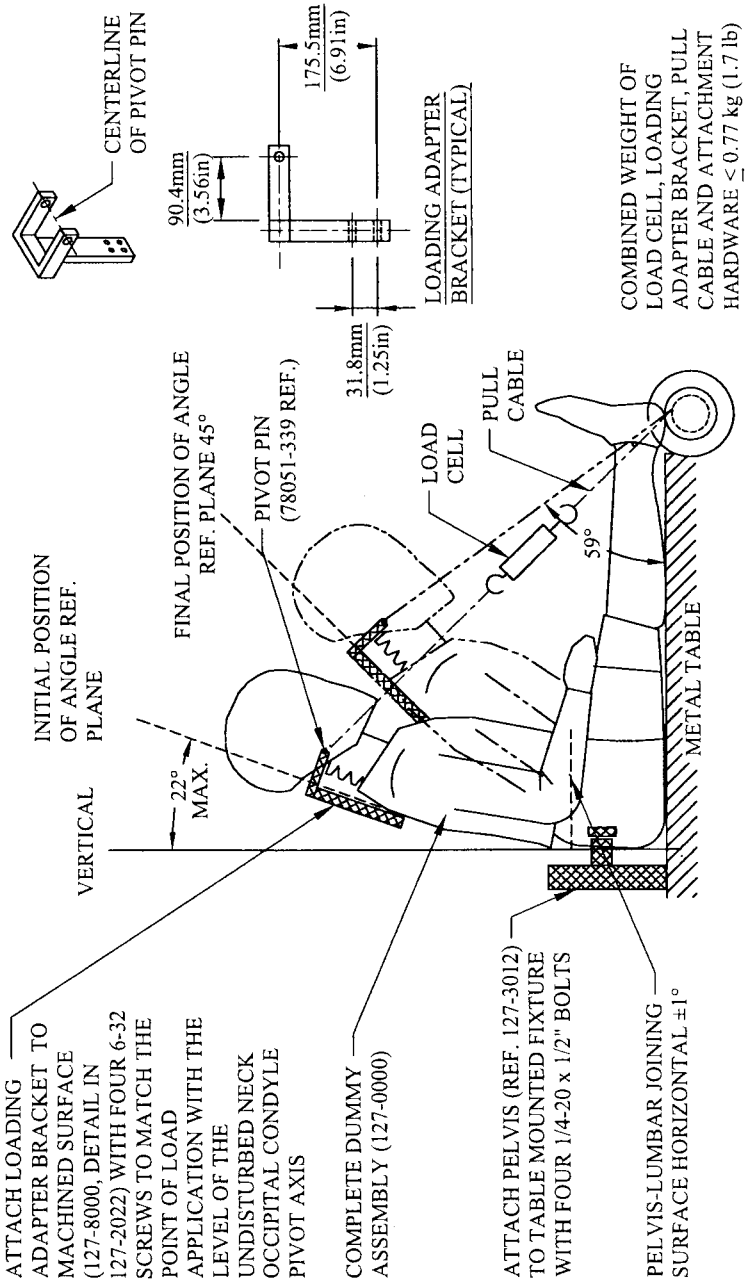


Issued: September 11, 2002.

**Stephen R. Kratzke,**

*Associate Administrator for Rulemaking.*

[FR Doc. 02–23512 Filed 9–18–02; 8:45 am]

**BILLING CODE 4910–59–C**

# Proposed Rules

Federal Register

Vol. 67, No. 182

Thursday, September 19, 2002

This section of the FEDERAL REGISTER contains notices to the public of the proposed issuance of rules and regulations. The purpose of these notices is to give interested persons an opportunity to participate in the rule making prior to the adoption of the final rules.

## NUCLEAR REGULATORY COMMISSION

### 10 CFR Part 50

**[Docket No. PRM–50–72]**

### Union of Concerned Scientists; Denial of Petition for Rulemaking

**AGENCY:** Nuclear Regulatory Commission.

**ACTION:** Denial of petition for rulemaking.

**SUMMARY:** The Nuclear Regulatory Commission (NRC) is denying a petition for rulemaking submitted by the Union of Concerned Scientists (PRM–50–72). The petitioner requested that the NRC revise its regulations to require nuclear power plant licensees to submit the performance indicator (PI) information needed for the NRC's Reactor Oversight Process (ROP). Currently, licensees are submitting the PI information needed for the ROP on a voluntary basis. The current voluntary program meets the NRC's regulatory needs. If circumstances change in the future (for example, if licensees decide to stop submitting the information voluntarily) the NRC can reevaluate its position on whether a rulemaking or other regulatory action is necessary at that time. The rulemaking requested by the petition might enhance public confidence to some degree by making the NRC appear more authoritative in the view of some individuals. However, it would consume resources to develop a rulemaking to codify the current practice, even though the current voluntary program meets the NRC's regulatory needs. Furthermore, if the current practice were codified, any future changes in the definitions or guidance for reporting PI information might be more difficult, use greater resources, and consume more time, as compared with changing a voluntary program.

**ADDRESSES:** Copies of the petition for rulemaking, the public comments received, and the NRC's letter of denial to the petitioner may be examined, and/or copied for a fee, at the NRC's Public Document Room, located at One White Flint North, 11555 Rockville Pike (first floor), Rockville, Maryland. These documents are also available electronically at the NRC's Public Electronic Reading Room on the Internet at *http://www.nrc.gov/reading-rm/adams.html.* From this site, the public can gain entry into the NRC's Agencywide Document Access and Management System (ADAMS), which provides text and image files of NRC's public documents. For further information contact the PDR Reference staff at 1 (800) 397–4209, (301) 415–4737 or by email to *pdr@nrc.gov.*

**FOR FURTHER INFORMATION CONTACT:** Dennis P. Allison, Office of Nuclear Reactor Regulation, U.S. Nuclear Regulatory Commission, Washington, DC 20555–0001, telephone (301) 415–1178, e-mail address *dpa@nrc.gov.*

**SUPPLEMENTARY INFORMATION:**

#### The Petition

The NRC published a notice of receipt of a petition for rulemaking and request for public comments in the **Federal Register** on March 5, 2001 (66 FR 13267). The comment period closed on May 21, 2001. The petition requested that the NRC revise its regulations to require that nuclear power plant licensees submit the PI information needed for the ROP. The petition acknowledged that licensees are now submitting this information on a voluntary basis. It also noted that PI information is an important part of the ROP. The petitioner stated that the NRC should require PI information in order to appear more authoritative and enhance public confidence. The petitioner also argued that currently, if one or two plants stop providing PI information, the NRC can compensate by performing more inspection but it is not clear that NRC will have the resources to compensate if many plants stop providing PI information in the future.

#### Public Comments on the Petition

None of the three public comment letters received supported the petition. The Nuclear Energy Institute (NEI) contended there is no indication that a problem exists necessitating the requested rulemaking. Further, NEI indicated that licensees are already required to report or collect almost all of the information used to develop the PIs. Finally, NEI stated that if PI information were not reported by licensees, no unique and undue burden would be placed on NRC inspection resources. Exelon Corporation submitted a letter that supported NEI's comments. Robert Leyse submitted a letter that did not indicate whether the petition should be granted or denied.

#### NRC Evaluation of the Petition

The NRC has evaluated the advantages and disadvantages of the rulemaking requested by the petition, as follows.

(1) *Maintaining Safety:* The requested rulemaking would not affect safety for the following reasons. Currently, licensees are submitting the PI information needed for the ROP on a voluntary basis. The current voluntary program meets the NRC's regulatory needs. If circumstances change in the future (for example, if licensees decide to stop submitting the information voluntarily) the NRC can reevaluate its position on whether a rulemaking or other regulatory action is necessary at that time. The options available would include: imposition of mandatory reporting requirements by rulemaking or order; request for information under oath or affirmation under 10 CFR 50.54(f); direct gathering of PI information by inspection; and/or additional inspection of basic cornerstone areas. If necessary, during the time it would take to implement one of these options, the NRC could gather sufficient information to continue the ROP using modest inspection resources.

(2) *Enhancing Public Confidence:* The requested rulemaking might enhance public confidence to some degree by making the NRC appear more authoritative in the view of some individuals. There would be no change, however, in the public availability of the PI information because it is already being made publicly available.

(3) *Improving Efficiency and Effectiveness:* The requested rulemaking would result in a decrease in the efficiency and effectiveness of the NRC's use of resources for the following reasons. The requested rulemaking would consume resources to develop a rulemaking to codify the current practice, even though the current voluntary program meets the NRC's regulatory needs. Furthermore, the

guidance and definitions used in reporting PI information are adjusted from time to time based on experience. In the future, changing a rule and/or regulatory guide might be more difficult, use greater resources, and consume more time than changing the voluntary program.

(4) *Reducing Unnecessary Regulatory Burden:* The requested rulemaking would not affect the regulatory burden on licensees because the PI information needed for the ROP is already being provided on a voluntary basis by all licensees.

**Reasons for Denial**

The Commission is denying the petition based on this evaluation. Currently, licensees are submitting the PI information needed for the ROP on a voluntary basis. The current voluntary program meets the NRC's regulatory needs. If circumstances change in the future (for example, if licensees decide to stop submitting the information voluntarily) the NRC can reevaluate its position on whether a rulemaking or other regulatory action is necessary at that time. The requested rulemaking might enhance public confidence to some degree by making the NRC appear more authoritative in the view of some individuals. However, it would consume resources to develop a rulemaking to codify the current practice, even though the current voluntary program meets the NRC's regulatory needs. Furthermore, if the current practice were codified, any future changes in the definitions or guidance for reporting PI information might be more difficult, use greater resources, and consume more time, as compared with changing a voluntary program.

For these reasons, the Commission denies the petition.

Dated at Rockville, Maryland, this 13th day of September, 2002.

For the Nuclear Regulatory Commission.

**Annette Vietti-Cook,**

*Secretary of the Commission.*

[FR Doc. 02–23812 Filed 9–18–02; 8:45 am]

**BILLING CODE 7590–01–P**

**DEPARTMENT OF TRANSPORTATION**

**Federal Aviation Administration**

**14 CFR Part 39**

**[Docket No. 2001–NE–48–AD]**

**RIN 2120–AA64**

## Airworthiness Directives; Hartzell Propeller Inc., Model HC–C2YR–4CF Propellers

**AGENCY:** Federal Aviation Administration, DOT.

**ACTION:** Notice of proposed rulemaking (NPRM).

**SUMMARY:** The Federal Aviation Administration (FAA) proposes to adopt a new airworthiness directive (AD) that is applicable to Hartzell Propeller Inc. model HC–C2YR–4CF propellers. This proposal would require the reduction of the original hub and blades certified service (fatigue) life from unlimited hours to 2,000 hours. This proposal is prompted by a reevaluation by Hartzell Propeller Inc. of the original hub and blades service life certification calculations. The actions specified by the proposed AD are intended to prevent fatigue failure of the original propeller hub and blades which may result in loss of airplane control.

**DATES:** Comments must be received by October 21, 2002.

**ADDRESSES:** Submit comments in triplicate to the Federal Aviation Administration (FAA), New England Region, Office of the Regional Counsel, Attention: Rules Docket No. 2001–NE–48–AD, 12 New England Executive Park, Burlington, MA 01803–5299. Comments may be inspected at this location, by appointment, between 8:00 a.m. and 4:30 p.m., Monday through Friday, except Federal holidays. Comments may also be sent via the Internet using the following address: ''*9-ane-adcomment@faa.gov*''. Comments sent via the Internet must contain the docket number in the subject line. The service information referenced in the proposed rule may be obtained from Hartzell Propeller Inc., Technical Publications Department, One Propeller Place, Piqua, OH 45356; telephone (937) 778–4200; fax (937) 778–4391. This information may be examined, by appointment, at the FAA, New England Region, Office of the Regional Counsel, 12 New England Executive Park, Burlington, MA.

**FOR FURTHER INFORMATION CONTACT:** Tomaso DiPaolo, Aerospace Engineer, Chicago Aircraft Certification Office, FAA, Small Airplane Directorate, 2300 East Devon Avenue, Des Plaines, IL 60018, telephone (847) 294–7031; fax (847) 294–7834.

**SUPPLEMENTARY INFORMATION:**

**Comments Invited**

Interested persons are invited to participate in the making of the proposed rule by submitting such written data, views, or arguments as they may desire. Communications should identify the Rules Docket number and be submitted in triplicate to the address specified above. All communications received on or before the closing date for comments, specified above, will be considered before taking action on the proposed rule. The proposals contained in this action may be changed in light of the comments received.

Comments are specifically invited on the overall regulatory, economic, environmental, and energy aspects of the proposed rule. All comments submitted will be available, both before and after the closing date for comments, in the Rules Docket for examination by interested persons. A report summarizing each FAA-public contact concerned with the substance of this proposal will be filed in the Rules Docket.

Commenters wishing the FAA to acknowledge receipt of their comments submitted in response to this action must submit a self-addressed, stamped postcard on which the following statement is made: ''Comments to Docket Number 2001–NE–48–AD.'' The postcard will be date stamped and returned to the commenter.

**Availability of NPRM's**

Any person may obtain a copy of this NPRM by submitting a request to the FAA, New England Region, Office of the Regional Counsel, Attention:

Rules Docket No. 2001–NE–48–AD, 12 New England Executive Park, Burlington, MA 01803–5299.

**Discussion**

The FAA and Hartzell Propeller Inc. have received reports of several engine crankshaft failures on Sky International Inc. (Pitts) S–2S and S–2B airplanes, which are manufactured by Aviat Aircraft Inc. of Afton, WY. Hartzell Propeller Inc. reevaluated the service (fatigue) life of the original propeller hubs part number (P/N) D–6522–1 or D–2201–16 and blades P/N FC8477A–4 installed in the model HC–C2YR–4CF propellers. Hartzell has reduced the certified service (fatigue) life of these original propeller hubs and blades from unlimited hours to 2,000 hours. Exceeding these life limits could result in fatigue failure of the hubs or blades

which may result in loss of airplane control. The 2,000-hour life limit is documented in the Airworthiness Limitations section of Hartzell Manual 113B.

**FAA's Determination of an Unsafe Condition and Proposed Actions**

Since an unsafe condition has been identified that is likely to exist or develop on other Hartzell Propeller Inc. model HC–C2YR–4CF propellers of the same type design, the proposed AD would require the reduction of the propeller hubs P/N D–6522–1 or D–2201–16 and blades P/N FC8477A–4 certified service (fatigue) life from unlimited hours to 2,000 hours.

**Economic Analysis**

There are approximately 377 propellers of the affected design in the worldwide fleet. The FAA estimates that 300 propellers installed on airplanes of U.S. registry would be affected by this proposed AD, that it would take approximately 6 work hours per propeller to do the proposed actions, and that the average labor rate is $60 per work hour. The approximate cost of a new hub and blades is $9,000. Based on these figures, the total cost of the proposed AD on U.S. operators is estimated to be $2,808,000.

**Regulatory Analysis**

This proposed rule does not have federalism implications, as defined in Executive Order 13132, because it would not have a substantial direct effect on the States, on the relationship between the national government and the States, or on the distribution of power and responsibilities among the various levels of government. Accordingly, the FAA has not consulted with state authorities prior to publication of this proposed rule.

For the reasons discussed above, I certify that this proposed regulation (1) is not a ''significant regulatory action'' under Executive Order 12866; (2) is not a ''significant rule'' under the DOT Regulatory Policies and Procedures (44 FR 11034, February 26, 1979); and (3) if promulgated, will not have a significant economic impact, positive or negative, on a substantial number of small entities under the criteria of the Regulatory Flexibility Act. A copy of the draft regulatory evaluation prepared for this action is contained in the Rules Docket. A copy of it may be obtained by contacting the Rules Docket at the location provided under the caption **ADDRESSES.**

**List of Subjects in 14 CFR Part 39**

Air transportation, Aircraft, Aviation safety, Safety.

**The Proposed Amendment**

Accordingly, pursuant to the authority delegated to me by the Administrator, the Federal Aviation Administration proposes to amend part 39 of the Federal Aviation Regulations (14 CFR part 39) as follows:

## PART 39—AIRWORTHINESS DIRECTIVES

1. The authority citation for part 39 continues to read as follows:

**Authority:** 49 U.S.C. 106(g), 40113, 44701.

**§ 39.13 [Amended]**

2. Section 39.13 is amended by adding the following new airworthiness directive:

**Hartzell Propeller Inc.:** Docket No. 2001–NE–48–AD.

**Applicability**

This airworthiness directive (AD) is applicable to Hartzell Propeller Inc. model HC–C2YR–4CF propellers with propeller hubs part number (P/N) D–6522–1 or D–2201–16 and propeller blades P/N FC8477A–4, installed on Sky International Inc. (Pitts) S–2S and S–2B airplanes with Textron Lycoming model AEIO–540–D4A5 engines.

**Note 1:** This AD applies to each propeller identified in the preceding applicability provision, regardless of whether it has been modified, altered, or repaired in the area subject to the requirements of this AD. For propellers that have been modified, altered, or repaired so that the performance of the requirements of this AD is affected, the owner/operator must request approval for an alternative method of compliance in accordance with paragraph (d) of this AD. The request should include an assessment of the effect of the modification, alteration, or repair on the unsafe condition addressed by this AD; and, if the unsafe condition has not been eliminated, the request should include specific proposed actions to address it.

**Compliance**

Compliance with this AD is required as indicated, unless already done.

To prevent fatigue failure of Hartzell propeller hubs P/N D–6522–1 or D–2201–16 and blades P/N FC8477A–4 which may result in loss of airplane control, do the following:

(a) Remove from service Hartzell propeller hubs P/N D–6522–1 or D–2201–16 and blades P/N FC8477A–4 before exceeding 2,000 flight hours and replace with serviceable hubs and blades.

(b) After the effective date of this AD, do not install any Hartzell propeller hubs P/N D–6522–1 or D–2201–16 and blades P/N FC8477A–4 that have accumulated 2,000 hours.

(c) A propeller hub or blade from an airplane that is identified in the applicability section of this AD may not be removed and reused on an airplane for which this AD is not applicable.

**Alternative Methods of Compliance**

(d) An alternative method of compliance or adjustment of the compliance time that provides an acceptable level of safety may be used if approved by the Manager, Chicago Aircraft Certification Office (ACO). Operators must submit their request through an appropriate FAA Principal Maintenance Inspector, who may add comments and then send it to the Manager, Chicago ACO.

**Note 2:** Information concerning the existence of approved alternative methods of compliance with this airworthiness directive, if any, may be obtained from the Chicago ACO.

**Special Flight Permits**

(e) Special flight permits may be issued in accordance with §§ 21.197 and 21.199 of the Federal Aviation Regulations (14 CFR 21.197 and 21.199) to operate the airplane to a location where the requirements of this AD can be done.

Issued in Burlington, Massachusetts, on September 11, 2002.

**Jay J. Pardee,**

*Manager, Engine and Propeller Directorate, Aircraft Certification Service.*

[FR Doc. 02–23777 Filed 9–18–02; 8:45 am]

BILLING CODE 4910–13–P

---

## DEPARTMENT OF TRANSPORTATION

## Federal Aviation Administration

## 14 CFR Part 39

**[Docket No. 2001–NE–30–AD]**

**RIN 2120–AA64**

## Airworthiness Directives; Pratt & Whitney JT8D–200 Series Turbofan Engines

**AGENCY:** Federal Aviation Administration, DOT.

**ACTION:** Notice of proposed rulemaking (NPRM).

**SUMMARY:** The Federal Aviation Administration (FAA) proposes to adopt a new airworthiness directive (AD) that is applicable to Pratt & Whitney (PW) JT8D–200 series turbofan engines. This proposal would require initial and repetitive visual inspections, fluorescent magnetic particle inspections (FMPI), and fretting wear inspections of high pressure compressor (HPC) front hubs that have operated with PWA–110 coating in the interface between the hub and the stage 8–9 spacer. This proposal is prompted by the discovery of cracked tierod holes found during routine engine overhauls. The actions specified by the proposed AD are intended to prevent a rupture of the HPC front hub

that could result in an uncontained engine failure and damage to the airplane.

**DATES:** Comments must be received by October 21, 2002.

**ADDRESSES:** Submit comments in triplicate to the Federal Aviation Administration (FAA), New England Region, Office of the Regional Counsel, Attention: Rules Docket No. 2001–NE–30–AD, 12 New England Executive Park, Burlington, MA 01803–5299. Comments may be inspected at this location, by appointment, between 8:00 a.m. and 4:30 p.m., Monday through Friday, except Federal holidays. Comments may also be sent via the Internet using the following address: ''*9-ane-adcomment@faa.gov*''. Comments sent via the Internet must contain the docket number in the subject line.

The service information referenced in the proposed rule may be obtained from Pratt & Whitney, 400 Main St., East Hartford, CT 06108, telephone (860) 565–6600; fax (860) 565–4503. This information may be examined, by appointment, at the FAA, New England Region, Office of the Regional Counsel, 12 New England Executive Park, Burlington, MA.

**FOR FURTHER INFORMATION CONTACT:** Christopher Spinney, Aerospace Engineer, Engine Certification Office, FAA, Engine and Propeller Directorate, 12 New England Executive Park, Burlington, MA 01803–5299; telephone (781) 238–7175, fax (781) 238–7199.

**SUPPLEMENTARY INFORMATION:**

## Comments Invited

Interested persons are invited to participate in the making of the proposed rule by submitting such written data, views, or arguments, as they may desire. Communications should identify the Rules Docket number and be submitted in triplicate to the address specified above. All communications received on or before the closing date for comments, specified above, will be considered before taking action on the proposed rule. The proposals contained in this action may be changed in light of the comments received.

Comments are specifically invited on the overall regulatory, economic, environmental, and energy aspects of the proposed rule. All comments submitted will be available, both before and after the closing date for comments, in the Rules Docket for examination by interested persons. A report summarizing each FAA-public contact concerned with the substance of this proposal will be filed in the Rules Docket.

Commenters wishing the FAA to acknowledge receipt of their comments submitted in response to this action must submit a self-addressed, stamped postcard on which the following statement is made: ''Comments to Docket Number 2001–NE–30–AD.'' The postcard will be date stamped and returned to the commenter.

## Availability of NPRM's

Any person may obtain a copy of this NPRM by submitting a request to the FAA, New England Region, Office of the Regional Counsel, Attention: Rules Docket No. 2001–NE–30–AD, 12 New England Executive Park, Burlington, MA 01803–5299.

## Discussion

The FAA has received reports of eighteen cracked PW JT8D–200 series HPC front hubs with PWA–110 coating in the interface between the hub and the stage 8–9 spacer. The cracks were discovered at engine overhauls after the engines had accumulated as few as 9,900 cycles-in-service. The cracks initiated at the site of fretting wear between the interface of the stage 8–9 spacer and the HPC front hub. The results of metallurgical examination indicate that the cracks had begun to propagate due to low-cycle fatigue (LCF). Eventually these cracks could propagate to a critical crack length, causing a rupture of the HPC front hub, which could result in an uncontained engine failure and damage to the airplane. The FAA has reviewed the statistical evaluation of the crack data and has determined that HPC front hubs should be inspected using the intervals and procedures outlined in PW Alert Service Bulletin (ASB) JT8D A6430, dated September 5, 2002. This condition, if not corrected, could result in an uncontained engine failure and damage to the airplane.

## Manufacturer's Service Information

The FAA has reviewed and approved the technical contents of PW Alert Service Bulletin (ASB) JT8D A6430, dated September 5, 2002, that describes procedures for visual, FMPI, and fretting inspections of HPC front hubs and replacement of the hubs, if necessary.

## FAA's Determination of an Unsafe Condition and Proposed Actions

Since an unsafe condition has been identified that is likely to exist or develop on other PW JT8D–200 series turbofan engines, this proposal would require initial and repetitive visual inspections, FMPI's, and fretting wear inspections of HPC front hubs that have operated with PWA–110 coating in the interface between the hub and the stage 8–9 spacer. The actions would be required to be done in accordance with the service bulletin described previously.

## Economic Analysis

There are approximately 2,648 PW JT8D–200 series turbofan engines of the affected design in the worldwide fleet. The FAA estimates that 2,352 engines installed on airplanes of U.S. registry would be affected by this proposed AD. The FAA also estimates that it would take approximately 6 work hours per engine to perform the proposed inspection, and that the average labor rate is $60 per work hour. Based on these figures, the total cost of the initial inspection to U.S. operators is estimated to be $846,720.

## Regulatory Analysis

This proposed rule does not have federalism implications, as defined in Executive Order 13132, because it would not have a substantial direct effect on the States, on the relationship between the national government and the States, or on the distribution of power and responsibilities among the various levels of government. Accordingly, the FAA has not consulted with state authorities prior to publication of this proposed rule.

For the reasons discussed above, I certify that this proposed regulation (1) is not a ''significant regulatory action'' under Executive Order 12866; (2) is not a ''significant rule'' under the DOT Regulatory Policies and Procedures (44 FR 11034, February 26, 1979); and (3) if promulgated, will not have a significant economic impact, positive or negative, on a substantial number of small entities under the criteria of the Regulatory Flexibility Act. A copy of the draft regulatory evaluation prepared for this action is contained in the Rules Docket. A copy of it may be obtained by contacting the Rules Docket at the location provided under the caption **ADDRESSES.**

## List of Subjects in 14 CFR Part 39

Air transportation, Aircraft, Aviation safety, Safety.

## The Proposed Amendment

Accordingly, pursuant to the authority delegated to me by the Administrator, the Federal Aviation Administration proposes to amend part 39 of the Federal Aviation Regulations (14 CFR part 39) as follows:

## PART 39—AIRWORTHINESS DIRECTIVES

1. The authority citation for part 39 continues to read as follows:

**Authority:** 49 U.S.C. 106(g), 40113, 44701.

### § 39.13 [Amended]

2. Section 39.13 is amended by adding the following new airworthiness directive:

**Pratt and Whitney:** Docket No. 2001–NE–30–AD.

**Applicability**

This airworthiness directive (AD) is applicable to Pratt & Whitney (PW) JT8D–209, –217, –217A, 217C, and –219 series turbofan engines that have high pressure compressor (HPC) front hubs installed that have operated with PWA–110 coating in the interface between the HPC front hub and the stage 8–9 spacer (PWA–110 coating applied to either the spacer or the hub) and were manufactured after June 1, 1988. These engines are installed on, but not limited to McDonnell Douglas MD–80 series airplanes.

**Note 1:** This AD applies to each engine identified in the preceding applicability provision, regardless of whether it has been modified, altered, or repaired in the area subject to the requirements of this AD. For engines that have been modified, altered, or repaired so that the performance of the requirements of this AD is affected, the owner/operator must request approval for an alternative method of compliance in accordance with paragraph (d) of this AD. The request should include an assessment of the effect of the modification, alteration, or repair on the unsafe condition addressed by this AD; and, if the unsafe condition has not been eliminated, the request should include specific proposed actions to address it.

**Compliance**

Compliance with this AD is required as indicated, unless already done. To prevent a rupture of the HPC front hub, that could result in an uncontained engine failure and damage to the airplane, do the following:

**Inspect Hubs**

(a) Strip the protective coating, visually inspect for fretting wear, fluorescent magnetic particle inspect (FMPI), reidentify and replate HPC front hubs and the stage 8–9 spacers and replace if necessary in accordance with the accomplishment instructions of Pratt & Whitney Alert Service Bulletin (ASB) JT8D A6430, dated September 5, 2002, as follows:

(1) For HPC front hubs with fewer than 17,000 total cycles-in-service (CIS) on the effective date of this AD, inspect at the first shop visit after accumulating 9,000 total CIS or before accumulating 18,000 total CIS, whichever occurs first.

(2) For HPC front hubs with greater than or equal to 17,000 total CIS but less than 19,000 total CIS on the effective date of this AD, inspect at the next shop visit, not to exceed 1,000 CIS from the effective date of this AD or 19,500 total CIS, whichever occurs first.

(3) For HPC front hubs with greater than or equal to 19,000 total CIS on the effective date of this AD, inspect within 500 CIS from the effective date of this AD.

**Repetitive-Inspections**

(b) Thereafter, strip the protective coating, visually inspect for fretting wear, FMPI and replate HPC front hubs and replace if necessary in accordance with the accomplishment instructions of Pratt & Whitney Alert Service Bulletin (ASB) JT8D A6430, dated September 5, 2002, at intervals not to exceed 6,500 CIS since the last inspection

**Optional Terminating Action**

(c) Installation of a Nickel-Cadmium plated HPC front hub that has never operated with PWA–110 coating in the interface between the HPC front hub and the stage 8–9 spacer and a Nickel-Cadmium or Electroless Nickel plated spacer is an optional terminating action for the inspections of paragraphs (a) and (b) of this AD.

**Definitions**

(d) For the purposes of this AD, a shop visit is defined as an engine removal, where engine maintenance entails separation of pairs of major engine flanges or the removal of a disk, hub, or spool at a maintenance facility, regardless of other planned maintenance, except as follows:

(1) Engine removal for the purpose of performing field maintenance type activities at a maintenance facility in lieu of performing them on-wing is not a ''shop visit''.

(2) Separation of flanges of the Combustion Chamber and Turbine Fan Duct Assembly (split flanges) for the purpose of accessing non-rotating accessory hardware is not a ''shop visit''.

(3) Separation of flanges for the purpose of shipment without subsequent internal maintenance is not a ''shop visit''.

**Alternative Methods of Compliance**

(e) An alternative method of compliance or adjustment of the compliance time that provides an acceptable level of safety may be used if approved by the Manager, Engine Certification Office (ECO). Operators must submit their requests through an appropriate FAA Principal Maintenance Inspector, who may add comments and then send it to the Manager, ECO.

**Note 2:** Information concerning the existence of approved alternative methods of compliance with this airworthiness directive, if any, may be obtained from the ECO.

**Special Flight Permits**

(f) Special flight permits may be issued in accordance with §§ 21.197 and 21.199 of the Federal Aviation Regulations (14 CFR 21.197 and 21.199) to operate the airplane to a location where the requirements of this AD can be done.

Issued in Burlington, Massachusetts, on September 10, 2002.

**Jay J. Pardee,**

*Manager, Engine and Propeller Directorate, Aircraft Certification Service.*

[FR Doc. 02–23776 Filed 9–18–02; 8:45 am]

BILLING CODE 4910–13–P

---

## DEPARTMENT OF TRANSPORTATION

## Federal Aviation Administration

## 14 CFR Part 71

**[Airspace Docket No. 02–AGL–15]**

## Proposed Establishment of Class D Airspace; Sparta, WI; Proposed Modification of Class E Airspace; Sparta, WI

**AGENCY:** Federal Aviation Administration (FAA), DOT.

**ACTION:** Notice of proposed rulemaking.

**SUMMARY:** This document proposes to establish Class D airspace at Sparta, WI, and modify Class E airspace at Sparta, WI. Area Navigation (RNAV) Standard Instrument Approach Procedures (SIAPS) to Runways (RWYS) 11, and 29, have been developed for the Sparta/Fort McCoy Airport. Controlled airspace extending upward from the surface of the earth is needed to contain aircraft executing these approaches. This action would establish a radius of Class D airspace, and increase the existing area of Class E airspace for Sparta/Fort McCoy Airport.

**EFFECTIVE DATES:** Comments must be received on or before October 30, 2002.

**ADDRESSES:** Send comments on the proposal in triplicate to: Federal Aviation Administration, Office of the Regional Counsel, AGL–7, Rules Docket No. 02–AGL–15, 2300 East Devon Avenue, Des Plaines, Illinois 60018.

The official docket may be examined in the Office of the Regional Counsel, Federal Aviation Administration, 2300 East Devon Avenue, Des Plaines, Illinois. An informal docket may also be examined during normal business hours at the Air Traffic Division, Airspace Branch, Federal Aviation Administration, 2300 Devon Avenue, Des Plaines, Illinois.

**FOR FURTHER INFORMATION CONTACT:** Denis C. Burke, Air Traffic Division, Airspace Branch, AGL–520, Federal Aviation Administration, 2300 East Devon Avenue, Des Plaines, Illinois 60018, telephone (847) 294–7568.

**SUPPLEMENTARY INFORMATION:**

### Comments Invited

Interested parties are invited to participate in this proposed rulemaking

by submitting such written data, views, or arguments as they may desire. Comments that provide the factual basis supporting the views and suggestions presented are particularly helpful in developing reasoned regulatory decisions on the proposal. Comments are specifically invited on the overall regulatory, aeronautical, economic, environmental, and energy-related aspects of the proposal. Communications should identify the airspace docket number and be submitted in triplicate to the address listed above. Commenters wishing the FAA to acknowledge receipt of their comments on this document must submit with those comments a self-addressed, stamped postcard on which the following statement is made: ''Comments to Airspace Docket No. 02–AGL–15.'' The postcard will be date/time stamped and returned to the commenter. All communications received on or before the specified closing date for comments will be considered before taking action on the proposed rule. The proposal contained in this document may be changed in light of comments received. All comments submitted will be available for examination in the Rules Docket, FAA, Great Lakes Region, Office of the Regional Counsel, 2300 East Devon Avenue, Des Plaines, Illinois, both before and after the closing date for comments. A report summarizing each substantive public contact with FAA personnel concerned with this rulemaking will be filed in the docket.

**Availability of NPRM's**

Any person may obtain a copy of this Notice of Proposed Rulemaking (NPRM) by submitting a request to the Federal Aviation Administration, Office of Public Affairs, Attention: Public Inquiry Center, APA–230, 800 Independence Avenue, SW., Washington, DC 20591, or by calling (202) 267–3484. Communications must identify the docket number of this NPRM. Persons interested in being placed on a mailing list for future NPRM's should also request a copy of Advisory Circular No. 11–2A, which describes the application procedures.

**The Proposal**

The FAA is considering an amendment to 14 CFR part 71 to establish Class D airspace and modify Class E airspace at Sparta, WI, by establishing a radius of Class D airspace and modifying Class E airspace for the Sparta/Fort McCoy Airport. Controlled airspace extending upward from the surface of the earth is needed to contain aircraft executing instrument approach procedures. The area would be depicted on appropriate aeronautical charts. Class D airspace designations are published in paragraph 5000, and Class E airspace areas extending upward from 700 feet or more above the surface of the earth are published in paragraph 6005, of FAA Order 7400.9J dated August 31 2001, and effective September 16, 2001, which is incorporated by reference in 14 CFR 71.1. The Class D and Class E airspace designations listed in this document would be published subsequently in the Order.

The FAA has determined that this proposed regulation only 8involves an establishment body of technical regulations for which frequent and routine amendments are necessary to keep them operationally current. Therefore this, proposed regulation—(1) is not a ''significant regulatory action'' under Executive Order 12866; (2) is not a ''significant rule'' under DOT Regulatory Policies and Procedures (44 FR 11034; February 26, 1979); and (3) does not warrant preparation of a Regulatory Evaluation as the anticipated impact is so minimal. Since this is a routine matter that will only affect air traffic procedures and air navigation, it is certified that this proposed rule will not have a significant economic impact on a substantial number of small entities under the criteria of the Regulatory Flexibility Act.

**List of Subjects in 14 CFR Part 71**

Airspace, Incorporation by reference, Navigation (air).

**The Proposed Amendment**

Accordingly, pursuant to the authority delegated to me, the Federal Aviation Administration proposes to amend 14 CFR part 71 as follows:

## PART 71—DESIGNATION OF CLASS A, CLASS B, CLASS C, CLASS D, AND CLASS E AIRSPACE AREAS; AIRWAYS; ROUTES; AND REPORTING POINTS

1. The authority citation for part 71 continues to read as follows:

**Authority:** 49 U.S.C. 106(g), 40103, 40113, 40120; E.O. 10854, 24 FR 9565, 3 CFR, 1959–1963 Comp., p. 389.

**§ 71.1 [Amended]**

2. The incorporation by reference in 14 CFR 71.1 of the Federal Aviation Administration Order 7400.9J, Airspace Designations and Reporting Points, dated August 31, 2001, and effective September 16, 2001, is amended as follows:

* * * * *

*Paragraph 5000 Class D airspace*

* * * * *

**AGL WI D Sparta, WI [New]**

Sparta, Sparta/Fort McCoy Airport, WI
(Lat. 43°57′30″ N., long. 90°44′16″ W.)

That airspace extending upward from the surface top and including 3,300 feet MSL within a 4.0-mile radius of the Sparta/Fort McCoy Airport. This Class D airspace area is effective during the specific dates and times established in advance by a Notice to Airmen. The effective date and time will thereafter be continuously published in the Airport/Facility Directory.

* * * * *

*Paragraph 6005 Class airspace areas extending upward from 700 feet or more above the surface of the earth.*

* * * * *

**AGL WI E5 Sparta, WI [Revised]**

Sparta, Sparta/Fort McCoy Airport, WI
(Lat. 43°57′30″ N., long. 90°44′16″ W.)
McCoy NDB
(Lat. 43°56′16″ N., long. 90°38′31″ W.)

That airspace extending upward from 700 feet above the surface within a 6.5-mile radius of the Sparta Fort McCoy Airport and within 3.8 miles each side of the 097° bearing from the McCoy NDB, extending from the 6.5-mile radius to 7 miles east of the NDB.

* * * * *

Issued in Des Plaines, Illinois on August 22, 2002.

**Nancy B. Shelton,**

*Manager, Air Traffic Division.*

[FR Doc. 02–23830 Filed 9–18–02; 8:45 am]

BILLING CODE 4910–13–M

---

## DEPARTMENT OF TRANSPORTATION

## Federal Aviation Administration

## 14 CFR Part 71

**[Airspace Docket No. 02–AGL–14]**

## Proposed Modification of Class E Airspace; Columbus, OH

**AGENCY:** Federal Aviation Administration (FAA), DOT.

**ACTION:** Notice of proposed rulemaking.

**SUMMARY:** This document proposes to modify Class E airspace at Columbus, OH, Standard Instrument Approach Procedures (SIAPS) have been developed for Darby Dan Airport. Controlled airspace extending upward from 700 feet or more above the surface of the earth is needed to contain aircraft executing these approaches. This action would increase the area of the existing controlled airspace for Port Columbus International Airport.

**DATES:** Comments must be received on or before October 30, 2002.

**ADDRESSES:** Send comments on the proposal in triplicate to: Federal Aviation Administration, Office of the Regional Counsel, AGL–7, Rules Docket No. 02–AGL–14, 2300 East Devon Avenue, Des Plaines, Illinois 60018.

The official docket may be examined in the Office of the Regional Counsel, Federal Aviation Administration, 2300 East Devon Avenue, Des Plaines, Illinois. An informal docket may also be examined during normal business hours at the Air Traffic Division, Airspace Branch, Federal Aviation Administration, 2300 East Devon Avenue, Des Plaines, Illinois.

**FOR FURTHER INFORMATION CONTACT:** Denis C. Burke, Air Traffic Division, Airspace Branch, AGL–520, Federal Aviation Administration, 2300 East Devon Avenue, Des Plaines, Illinois 60018, telephone (847) 294–7568.

**SUPPLEMENTARY INFORMATION:**

## Comments Invited

Interested parties are invited to participate in this proposed rulemaking by submitting such written data, views, or arguments as they may desire. Comments that provide the factual basis supporting the views and suggestions presented are particularly helpful in developing reasoned regulatory decisions on the proposal. Comments are specifically invited on the overall regulatory, aeronautical, economic, environmental, and energy-related aspects of the proposal. Communications should identify the airspace docket number and be submitted in triplicate to the address listed above. Commenters wishing the FAA to acknowledge receipt of their comments on this document must submit with those comments a self-addressed, stamped postcard on which the following statement is made: ''Comments to Airspace Docket No. 02–AGL–14.'' The postcard will be date/time stamped and returned to the commenter. All communications received on or before the specified closing date for comments will be considered before taking action on the proposed rule. The proposal contained in this action may be changed in light of comments received. All comments submitted will be available for examination in the Rules Docket, FAA, Great Lakes Region, Office of the Regional Counsel, 2300 East Devon Avenue, Des Plaines, Illinois, both before and after the closing date for comments. A report summarizing each substantive public contact with FAA personnel concerned with this rulemaking will be filed in the docket.

## Availability of NPRM's

Any person may obtain a copy of this Notice of Proposed Rulemaking (NPRM) by submitting a request to the Federal Aviation Administration, Office of Public Affairs, Attention: Public Inquiry Center, APA–230, 800 Independence Avenue, SW., Washington, DC 20591, or by calling (202) 267–3484. Communications must identify the docket number of this NPRM. Persons interested in being placed on a mailing list for future NPRM's should also request a copy of Advisory Circular No. 11–2A, which describes the application procedure.

## The Proposal

The FAA is considering an amendment to 14 CFR part 71 to modify Class E airspace at Columbus, OH, for Darby Dan Airport. Controlled airspace extending upward from 700 feet or more above the surface of the earth is needed to contain aircraft executing instrument approach procedures. The area would be depicted on appropriate aeronautical charts. Class E airspace areas extending upward from 700 feet or more above the surface of the earth are published in paragraph 6005 of FAA Order 7400.9J dated August 31, 2001, and effective September 16, 2001, which is incorporated by reference in 14 CFR 71.1. The Class E designations listed in this document would be published subsequently in the Order.

The FAA has determined that this proposed regulation only involves an establishment body of technical regulations for which frequent and routine amendments are necessary to keep them operationally current. Therefore this, proposed regulation—(1) is not a ''significant regulatory action'' under Executive Order 12866; (2) is not a ''significant rule'' under DOT Regulatory Policies and Procedures (44 FR 11034; February 26, 1979); and (3) does not warrant preparation of a Regulatory Evaluation as the anticipated impact is so minimal. Since this is a routine matter that will only affect air traffic procedures and air navigation, it is certified that this proposed rule will not have a significant economic impact on a substantial number of small entities under the criteria of the Regulatory Flexibility Act.

## List of Subjects in 14 CFR Part 71

Airspace, Incorporation by reference, Navigation (air).

## The Proposed Amendment

Accordingly, pursuant to the authority delegated to me, the Federal Aviation Administration proposes to amend 14 CFR part 71 as follows:

## PART 71—DESIGNATION OF CLASS A, CLASS B, CLASS C, CLASS D, AND CLASS E AIRSPACE AREAS; AIRWAYS; ROUTES; AND REPORTING POINTS

1. The authority citation for part 71 continues to read as follows:

**Authority:** 49 U.S.C. 106(g), 40103, 40113, 40120; E.O. 18054, 24 FR 9565, 3 CFR, 1959–1963 Comp., p. 389.

### § 71.1 [Amended]

2. The in corporation by reference in 14 CFR 71.1 of the Federal Aviation Administration Order 7400.9J, Airspace Designations and Reporting Points, dated August 31, 2001, and effective September 16, 2001, is amended as follows:

* * * * *

*Paragraph 6005 Class E airspace areas extending upward from 700 feet or more above the surface of the earth.*

* * * * *

**AGL OH E5 Columbus, OH (REVISED)**

Columbus, Port Columbus International Airport, OH
(Lat. 39°59′53″ N., long. 82°53′31″ W.)
Columbus, Rickenbacker Airport, OH
(Lat. 39°48′50″ N., long. 82°55′40″ W.)
Columbus, Ohio State University Airport, OH
(Lat. 40°04′47″ N., long. 83°04′23″ W.)
Columbus, Bolton Field Airport, OH
(Lat. 39°54′04″ N., long. 84°08′13″ W.)
Columbus, Darby Dan Airport, OH
(Lat. 39°56′31″ N., long. 83°12′18″ W.)
Lancaster, Fairfield County Airport, OH
(Lat. 39°45′20″ N., long. 82°39′26″ W.)
Don Scott NDB
(Lat. 40°04′49″ N., long. 83°04′44″ W.)

That airspace extending upward from 700 feet above the surface within a 7-mile radius of Port Columbus International Airport and within a 7-mile radius of Rickenbacker Airport, and within a 6.5-mile radius of the Ohio State University Airport, and within 3 miles either side of the 091° bearing from the Don Scott NDB extending from the 6.5-mile radius to 9.8 miles east of the NDB and within a 7.4-mile radius of Bolton Field Airport and within a 6.4-mile radius of Fairfield County Airport and within a 6.5-mile radius of Darby Dan Airport excluding that airspace within the London, OH Class E airspace area.

* * * * *

Issued in Des Plaines, Illinois on August 22, 2002.

**Nancy B. Shelton,**

*Manager, Air Traffic Division, Great Lakes Region.*

[FR Doc. 02–23828 Filed 9–18–02; 8:45 am]

BILLING CODE 4910–13–M

**DEPARTMENT OF TRANSPORTATION**

**Federal Aviation Administration**

**14 CFR Part 71**

**[Airspace Docket No. 02–AGL–13]**

## Proposed Modification of Class E Airspace; Dayton, OH

**AGENCY:** Federal Aviation Administration (FAA), DOT.

**ACTION:** Notice of proposed rulemaking.

**SUMMARY:** This document proposes to modify Class E airspace at Dayton, OH. Standard Instrument Approach Procedures (SIAPS) have been developed for James M Cox Dayton International Airport. Controlled airspace extending upward from 700 feet or more above the surface of the earth is needed to contain aircraft executing these approaches. This action would increase the area of the existing controlled airspace for James M Cox Dayton International Airport.

**DATES:** Comments must be received on or before October 30, 2002.

**ADDRESSES:** Send comments on the proposal in triplicate to: Federal Aviation Administration, Office of the Regional Counsel, AGL–7, Rules Docket No. 02–AGL–13, 2300 East Devon Avenue, Des Plaines, Illinois 60018.

The official docket may be examined in the Office of the Regional Counsel, Federal Aviation Administration, 2300 East Devon Avenue, Des Plaines, Illinois. An informal docket may also be examined during normal business hours at the Air Traffic Division, Airspace Branch, Federal Aviation Administration, 2300 East Devon Avenue, Des Plaines, Illinois.

**FOR FURTHER INFORMATION CONTACT:** Denis C. Burke, Air Traffic Division, Airspace Branch, AGL–520, Federal Aviation Administration, 2300 East Devon Avenue, Des Plaines, Illinois 60018, telephone (847) 294–7568.

**SUPPLEMENTARY INFORMATION:**

### Comments Invited

Interested parties are invited to participate in this proposed rulemaking by submitting such written data, views, or arguments as they may desire. Comments that provide the factual basis supporting the views and suggestions presented are particularly helpful in developing reasoned regulatory decisions on the proposal. Comments are specifically invited on the overall regulatory, aeronautical, economic, environmental, and energy-related aspects of the proposal. Communications should identify the airspace docket number and be submitted in triplicate to the address listed above. Commenters wishing the FAA to acknowledge receipt of their comments on this document must submit with those comments a self-addressed, stamped postcard on which the following statement is made: ''Comments to Airspace Docket No. 02–AGL–13.'' The postcard will be date/time stamped and returned to the commenter. All communications received on or before the specified closing date for comments will be considered before taking action on the proposed rule. The proposal contained in this action may be changed in light of comments received. All comments submitted will be available for examination in the Rules Docket, FAA, Great Lakes Region, Office of the Regional Counsel, 2300 East Devon Avenue, Des Plaines, Illinois, both before and after the closing date for comments. A report summarizing each substantive public contact with FAA personnel concerned with this rulemaking will be filed in the docket.

### Availability of NPRM's

Any person may obtain a copy of this Notice of Proposed Rulemaking (NPRM) by submitting a request to the Federal Aviation Administration, Office of Public Affairs, Attention: Public Inquiry Center, APA–230, 800 Independence Avenue, SW., Washington, DC 20591, or by calling (202) 267–3484. Communications must identify the docket number of this NPRM. Persons interested in being placed on a mailing list for future NPRM's should also request a copy of Advisory Circular No. 11–2A, which describes the application procedure.

### The Proposal

The FAA is considering an amendment to 14 CFR part 71 to modify Class E airspace at Dayton, OH, for James M Cox Dayton International Airport. Controlled airspace extending upward from 700 feet or more above the surface of the earth is needed to contain aircraft executing instrument approach procedures. The area would be depicted on appropriate aeronautical charts. Class E airspace areas extending upward from 700 feet or more above the surface of the earth are published in paragraph 6005 of FAA Order 7400.9J dated August 31, 2001, and effective September 16, 2001, which is incorporated by reference in 14 CFR 71.1. The Class E designations listed in this document would be published subsequently in the Order.

The FAA has determined that this proposed regulation only involves an establishment body of technical regulations for which frequent and routine amendments are necessary to keep them operationally current. Therefore, this proposed regulation—(1) is not a ''significant regulatory action'' under Executive Order 12866; (2) is not a ''significant rule'' under DOT Regulatory Policies and Procedures (44 FR 11034; February 26, 1979); and (3) does not warrant preparation of a Regulatory Evaluation as the anticipated impact is so minimal. Since this is a routine matter that will only affect air traffic procedures and air navigation, it is certified that this proposed rule will not have a significant economic impact on a substantial number of small entities under the criteria of the Regulatory Flexibility Act.

### List of Subjects in 14 CFR Part 71

Airspace, Incorporation by reference, Navigation (air).

### The Proposed Amendment

Accordingly, pursuant to the authority delegated to me, the Federal Aviation Administration proposes to amend 14 CFR part 71 as follows:

## PART 71—DESIGNATION OF CLASS A, CLASS B, CLASS C, CLASS D, AND CLASS E AIRSPACE AREAS; AIRWAYS; ROUTES; AND REPORTING POINTS

1. The authority citation for part 71 continues to read as follows:

**Authority:** 49 U.S.C. 106(g), 40103, 40113, 40120; E.O. 10854, 24 FR 9565, 3 CFR, 1959–1963 Comp., p. 389.

### § 71.1 [Amended]

2. The incorporation by reference in 14 CFR 71.1 of the Federal Aviation Administration Order 7400.9J, Airspace Designations and Reporting Points, dated August 31, 2001, and effective September 16, 2001, is amended as follows:

* * * * *

*Paragraph 6005 Class E airspace areas extending upward from 700 feet or more above the surface of the earth.*

* * * * *

**AGL MI E5 Dayton, OH [Revised]**

That airspace extending upward from 700 feet above the surface bounded by a line beginning at lat. 39°59′00″ N., long. 83°40′00″ W., to lat. 39°55′00″ N., long. 83°37′00″ W., to lat. 39°45′00″ N., long. 83°43′00″ W., to lat. 39°39′00″ N., long. 84°07′00″ W., to lat. 39°45′00″ N., long. 84°24′00″ W., to lat. 39°49′00″ N., long. 84°27′00″ W., to lat. 40°04′06″ N., long. 84°17′45″ W., to the point of beginning.

* * * * *

Issued in Des Plaines, Illinois on August 22, 2002.

**Nancy B. Shelton,**

*Manager, Air Traffic Division, Great Lakes Region.*

[FR Doc. 02–23829 Filed 9–18–02; 8:45 am]

**BILLING CODE 4910–13–M**

## DEPARTMENT OF VETERANS AFFAIRS

## 38 CFR Part 4

**RIN 2900–AK86**

## Schedule for Rating Disabilities: Evaluation of Tinnitus

**AGENCY:** Department of Veterans Affairs.

**ACTION:** Proposed rule.

**SUMMARY:** This document proposes to amend the Department of Veterans Affairs (VA) Schedule for Rating Disabilities to state more explicitly the method of evaluation of tinnitus under diagnostic code 6260 in the portion of the rating schedule that addresses evaluation of disabilities of the ear. The intended effect of this action is to codify current standard VA practice by stating that recurrent tinnitus will be assigned only a single 10-percent evaluation, whether it is perceived in one ear, both ears, or somewhere in the head.

**DATES:** Comments must be received by VA on or before November 18, 2002.

**ADDRESSES:** Mail or hand-deliver written comments to: Director, Office of Regulations Management (02D), Department of Veterans Affairs, 810 Vermont Ave., NW., Room 1154, Washington, DC 20420; or fax comments to (202) 273–9289; or e-mail comments to *OGCRegulations@mail.va.gov.* Comments should indicate that they are submitted in response to ''RIN 2900–AK86.'' All comments received will be available for public inspection in the Office of Regulations Management, Room 1158, between the hours of 8 a.m. and 4:30 p.m., Monday through Friday (except holidays).

**FOR FURTHER INFORMATION CONTACT:** Caroll McBrine, M.D., Consultant, Regulations Staff (211A), Compensation and Pension Service, Veterans Benefits Administration, Department of Veterans Affairs, 810 Vermont Ave., NW., Washington, DC 20420, (202) 273–7210.

**SUPPLEMENTARY INFORMATION:** This document proposes to amend the Department of Veterans Affairs (VA) Schedule for Rating Disabilities (the rating schedule) to state more explicitly the method of evaluation of recurrent tinnitus, diagnostic code 6260, in § 4.87, the portion of the rating schedule that addresses evaluation of disabilities of the ear. The current rating schedule directs that recurrent tinnitus be evaluated at 10 percent. A note under diagnostic code 6260 indicates that a separate evaluation for tinnitus may be combined with an evaluation under other diagnostic codes for hearing impairment or certain diseases of the ear, except when tinnitus supports an evaluation under one of those diagnostic codes. Recently, VA has received claims for two separate evaluations for tinnitus in the same individual, one for each side, when recurrent tinnitus is perceived bilaterally. To avoid any possible misunderstanding, VA is proposing to amend the rating schedule to definitively state that recurrent tinnitus is assigned only one evaluation whether it is perceived in one ear, both ears, or an indeterminate site in the head. This amendment involves no substantive change and is consistent with current practice.

''The Merck Manual'' (665, 17th ed. 1999) states that tinnitus is the perception of sound in the absence of an acoustic stimulus, and the American Tinnitus Association defines tinnitus as the perception of sound when no external sound is present (*http://www.ata.org/about_tinnitus/*). ''Tinnitus: Facts, Theories, and Treatments (1982),'' published by the National Academy Press, states that tinnitus is the conscious experience of a sound that originates in the head of its owner (*http://books.nap/books/0309033284/html*).

Tinnitus is classified either as subjective tinnitus (over 95% of cases) or objective tinnitus. In subjective or ''true'' tinnitus, the sound is audible only to the patient. In the much rarer objective tinnitus (sometimes called extrinsic tinnitus or ''pseudo-tinnitus''), the sound is audible to other people, either simply by listening or with a stethoscope. Objective tinnitus commonly has a definite cause that generates the sound, such as vascular or muscular disorders. Objective tinnitus may also be due to such nonpathologic causes as noise from the temporomandibular joints, openings of the eustachian tubes, or repetitive muscle contractions.

True (subjective) tinnitus does not originate in the inner ear, although damage to the inner ear may be a precursor of subjective tinnitus. It is theorized that in true tinnitus the brain creates phantom sensations to replace missing inputs from the damaged inner ear, similar to the brain's creation of phantom pain in amputated limbs (Diseases of the Ear, H. Ludman, and T. Wright, 6th ed., chapter 11; Phantom auditory perception (tinnitus): mechanisms of generation and perception, Neuroscience Research 8:221–2, P. Jasterboff, 1990; and Mechanisms of Tinnitus. Allyn and Bacon, 1995, J. Vernon and A. Moller (Eds)). The Oregon Tinnitus Data Archive found in a study of 1630 individuals with tinnitus that 63% reported tinnitus in both ears and 11% reported it as filling the head (*http://www.ohsu.edu/ohrc-otda/95–01/data/08.html*). Therefore, in the great majority of cases, tinnitus is reported as either bilateral or undefined as to side.

True tinnitus, *i.e.*, the perception of sound in the absence of an external stimulus, appears to arise from the brain rather than the ears. We, therefore, propose to state more explicitly that recurrent tinnitus is assigned only one evaluation whether it is perceived in one ear, both ears, or an indeterminate site in the head.

To assure that tinnitus is consistently and correctly evaluated, we propose to add a second note under diagnostic code 6260 directing that only a single evaluation be assigned for recurrent tinnitus, whether the sound is perceived in one ear, both ears, or in the head. We also propose to add a third note concerning the evaluation of objective tinnitus that would direct raters not to evaluate objective tinnitus (in which the sound is audible to other people and has a definable cause that may or may not be pathologic) under this diagnostic code, but to evaluate it as part of any underlying condition causing it.

### Paperwork Reduction Act

This document contains no provisions constituting a collection of information under the Paperwork Reduction Act (44 U.S.C. 3501–3520).

### Regulatory Flexibility Act

The Secretary hereby certifies that this regulatory amendment will not have a significant economic impact on a substantial number of small entities as they are defined in the Regulatory Flexibility Act (RFA), 5 U.S.C. 601–612. This amendment would not directly affect any small entities. Only VA beneficiaries could be directly affected. Therefore, pursuant to 5 U.S.C. 605(b), this amendment is exempt from the initial and final regulatory flexibility analysis requirements of sections 603 and 604.

### Executive Order 12866

This document has been reviewed by the Office of Management and Budget under Executive Order 12866.

**Unfunded Mandates**

The Unfunded Mandates Reform Act requires, at 2 U.S.C. 1532, that agencies prepare an assessment of anticipated costs and benefits before developing any rule that may result in an expenditure by State, local, or tribal governments, in the aggregate, or by the private sector of $100 million or more in any given year. This rule would have no consequential effect on State, local, or tribal governments.

**Catalog of Federal Domestic Assistance Numbers**

The Catalog of Federal Domestic Assistance program numbers are 64.104 and 64.109.

**List of Subjects in 38 CFR Part 4**

Disability benefits, Pensions, Veterans.

Approved: June 14, 2002.

**Anthony J. Principi,**

*Secretary of Veterans Affairs.*

For the reasons set out in the preamble, 38 CFR part 4, subpart B, is proposed to be amended as set forth below:

## PART 4—SCHEDULE FOR RATING DISABILITIES

1. The authority citation for part 4 continues to read as follows:

**Authority:** 38 U.S.C. 1155, unless otherwise noted.

### Subpart B—Disability Ratings

2. In § 4.87, diagnostic code 6260 is revised to read as follows:

**§ 4.87 Schedule of ratings—ear.**

DISEASES OF THE EAR

| | Rating |
|---|---|
| * * * * * | |
| 6260 Tinnitus, recurrent ..... | 10 |

**Note (1):** A separate evaluation for tinnitus may be combined with an evaluation under diagnostic codes 6100, 6200, 6204, or other diagnostic code, except when tinnitus supports an evaluation under one of those diagnostic codes.

**Note (2):** Assign only a single evaluation for recurrent tinnitus, whether the sound is perceived in one ear, both ears, or in the head.

**Note (3):** Do not evaluate objective tinnitus (in which the sound is audible to other people and has a definable cause that may or may not be pathologic) under this diagnostic code, but evaluate it as part of any underlying condition causing it.

**Authority:** 38 U.S.C. 1155

[FR Doc. 02–23784 Filed 9–18–02; 8:45 am]

BILLING CODE 8320–01–P

---

## ENVIRONMENTAL PROTECTION AGENCY

### 40 CFR Part 52

**[SIP No. UT–001–0043b, UT–001–0044b; FRL–7376–6]**

### Approval and Promulgation of Air Quality Implementation Plans; Utah; New Source Performance Standards

**AGENCY:** Environmental Protection Agency (EPA).

**ACTION:** Proposed rule.

**SUMMARY:** On January 8, 1999 and December 10, 1999, the Governor of Utah submitted revisions to the New Source Performance Standards (NSPS) rules in Utah's Air Conservation Regulations. We are proposing to approve updates to the NSPS ''Delegation Status of New Source Performance Standards'' table to indicate the State has been delegated the authority to implement and enforce NSPS and to add entries for newly delegated NSPS. Also, given that the State has been delegated the authority for implementation and enforcement of the NSPS, we are proposing to remove the NSPS rules from the Utah SIP. These actions are being taken under sections 110 and 111 of the Clean Air Act.

In the ''Rules and Regulations'' section of this **Federal Register**, EPA is approving the State's SIP revision as a direct final rule without prior proposal because the Agency views this as a noncontroversial SIP revision and anticipates no adverse comments. A detailed rationale for the approval is set forth in the preamble to the direct final rule. If EPA receives no adverse comments, EPA will not take further action on this proposed rule. If EPA receives adverse comments, EPA will withdraw the direct final rule and it will not take effect. EPA will address all public comments in a subsequent final rule based on this proposed rule. EPA will not institute a second comment period on this action. Any parties interested in commenting must do so at this time. Please note that if EPA receives adverse comment on an amendment, paragraph, or section of this rule and if that provision may be severed from the remainder of the rule, EPA may adopt as final those provisions of the rule that are not the subject of an adverse comment.

**DATES:** Comments must be received in writing on or before October 21, 2002.

**ADDRESSES:** Written comments may be mailed to Richard R. Long, Director, Air and Radiation Program, Mailcode 8P–AR, Environmental Protection Agency (EPA), Region 8, 999 18th Street, Suite 300, Denver, Colorado, 80202. Copies of the documents relevant to this action are available for public inspection during normal business hours at the Air and Radiation Program, Environmental Protection Agency, Region 8, 999 18th Street, Suite 300, Denver, Colorado, 80202. Copies of the State documents relevant to this action are available for public inspection at the Utah Department of Environmental Quality, Division of Air Quality, 150 North 1950 West, Salt Lake City, Utah 84114.

**FOR FURTHER INFORMATION CONTACT:** Laurel Dygowski, EPA, Region 8, (303) 312–6144.

**SUPPLEMENTARY INFORMATION:** See the information provided in the Direct Final action of the same title which is located in the Rules and Regulations section of this **Federal Register**.

**Authority:** 42 U.S.C. 7401 *et seq.*

Dated: August 27, 2002.

**Jack W. McGraw,**

*Acting Regional Administrator, Region 8.*

[FR Doc. 02–23379 Filed 9–18–02; 8:45 am]

BILLING CODE 6560–50–P

---

## ENVIRONMENTAL PROTECTION AGENCY

### 40 CFR Part 63

**[FRL–7379–2]**

### Approval of Section 112(l) Authority for Hazardous Air Pollutants; Delegation of Section 111 and Section 112 Standards; State of New Hampshire

**AGENCY:** Environmental Protection Agency (EPA).

**ACTION:** Proposed rule.

**SUMMARY:** EPA proposes to approve New Hampshire Department of Environmental Services' (NH DES) request for delegation of authority to implement and enforce its New Source Performance Standards (NSPSs) and National Emission Standards for Hazardous Air Pollutants (NESHAPs) that have been adopted by reference into New Hampshire's state regulations from the Federal requirements set forth in the Code of Federal Regulations. In addition, EPA proposes to approve NH DES's mechanism for receiving delegation of future NESHAPs and NSPSs. Approval of this action would delegate existing standards for both major and area sources and would automatically delegate future

regulations and amendments to regulations once NH DES incorporates these regulations and amendments into its regulations. EPA is taking this action in accordance with the Clean Air Act (CAA).

In the final rules section of this **Federal Register**, EPA is approving NH DES's request as a direct final rule without prior proposal because the Agency views this as a noncontroversial action and anticipates no relevant adverse comments. A detailed rationale for the approval is set forth in the direct final rule. If no relevant adverse comments are received in response to this action, EPA will not take further action on this proposed rule. If the EPA receives relevant adverse comments, EPA will withdraw the direct final rule and it will not take effect. EPA will then address all public comments received in a subsequent final rule based on this proposed rule. The EPA will not institute a second comment period.

**DATES:** Written comments must be received on or before October 21, 2002.

**ADDRESSES:** Written comments should be mailed concurrently to the addresses below:

Steven Rapp, Chief, Air Permits, Toxics and Indoor Programs Unit (CAP), U.S. Environmental Protection Agency, Region I, One Congress Street, Suite1100, Boston, MA 02114–2023.

Barbara L. Hoffman, Stationary Source Planning Manager, New Hampshire Department of Environmental Services, Air Resources Division, 6 Hazen Drive, Concord, NH 03302–0095.

Copies of the requests for approval are available for public inspection at EPA's Region I Office, Air Permits, Toxics and Indoor Programs Unit during normal business hours.

**FOR FURTHER INFORMATION CONTACT:** Susan Lancey, Air Permits Unit, U.S. EPA Region I, One Congress St, Suite 1100 (CAP), Boston, MA 02114–2023, (617) 918–1656.

**SUPPLEMENTARY INFORMATION:** For additional information see the direct final action which is published in the Rules section of this **Federal Register**.

Dated: September 3, 2002.

**Robert W. Varney,**

*Regional Administrator, EPA—New England.*

[FR Doc. 02–23729 Filed 9–18–02; 8:45 am]

BILLING CODE 6560–50–P

## ENVIRONMENTAL PROTECTION AGENCY

## 40 CFR Part 300

**[FRL–7377–3]**

## National Oil and Hazardous Substance Pollution Contingency Plan; National Priorities List

**AGENCY:** Environmental Protection Agency.

**ACTION:** Notice of intent to delete the Basic Microelectronics, Incorporated (BMI)-Textron Superfund Site from the National Priorities List.

**SUMMARY:** The Environmental Protection Agency (EPA) Region 4 is issuing a notice of intent to delete BMI-Textron Superfund Site (Site) located in Lake Park, West Palm Beach County, Florida, from the National Priorities List (NPL) and requests public comments on this notice of intent. The NPL, promulgated pursuant to section 105 of the Comprehensive Environmental Response, Compensation, and Liability Act (CERCLA) of 1980, as amended, is found at appendix B of 40 CFR part 300 which is the National Oil and Hazardous Substances Pollution Contingency Plan (NCP). The EPA and the State of Florida, through the Florida Department of Environmental Protection, have determined all the Potentially Responsible Partys (PRPs) have implemented all appropriate response actions under CERCLA, other than operation and maintenance and five-year reviews. However, this deletion does not preclude future actions under Superfund.

In the ''Rules and Regulations'' section of today's **Federal Register**, we are publishing a direct final notice of deletion of BMI-Textron Superfund Site without prior notice of intent to delete because we view this as a noncontroversial revision and anticipate no adverse comment. We have explained our reasons for this deletion in the preamble to the direct final deletion. If we receive no adverse comment(s) on the direct final notice of deletion, we will not take further action on this notice of intent to delete. If we receive adverse comment(s), we will withdraw the direct final notice of deletion and it will not take effect. We will, as appropriate, address all public comments in a subsequent final deletion notice based on this notice of intent to delete. We will not institute a second comment period on this notice of intent to delete. Any parties interested in commenting must do so at this time. For additional information, see the direct final notice of deletion which is located in the Rules section of this **Federal Register**.

**DATES:** Comments concerning this Site must be received by October 21, 2002.

**ADDRESSES:** Written comments should be addressed to: L'Tonya Spencer, Community Involvement Coordinator, U.S. Environmental Protection Agency, Region 4 (4WD–ERCIB), 61 Forsyth Street, Atlanta, GA 30303, *spencer.latonya@epa.gov,* (404) 562–8463, 1–800–564–7577.

**FOR FURTHER INFORMATION CONTACT:** Jan Martin, Remedial Project Manager, U.S. Environmental Protection Agency, Region 4 (4WD–SSMB); 61 Forsyth Street, SW., Atlanta, Georgia 30303, (404) 562–8593; *martin.jan@epa.gov.*

**SUPPLEMENTARY INFORMATION:** For additional information, see the Direct Final Notice of Deletion which is located in the Rules section of this Federal Register.

### Information Repositories

Repositories have been established to provide detailed information concerning this decision at the following addresses:

U.S EPA Record Center, 61 Forsyth Street, SW., Atlanta, Georgia 30303, Phone: (404) 562–8190, Hours: 8 a.m. to 5 p.m., Monday through Friday (By Appointment Only).

Lake Park Library, 529 Park Avenue, Lake Park, Florida 30403, Phone: (561) 881–3330, Hours: 9 a.m. to 8:30 p.m., Monday and Tuesday, 9 a.m. to 5:30 p.m. , Wednesday through Friday, 9:30 a.m. to 2 p.m., Saturday.

### List of Subjects in 40 CFR Part 300

Environmental protection, Air pollution control, Chemicals, Hazardous waste, Hazardous substances, Intergovernmental relations, Penalties, Reporting and recordkeeping requirements, Superfund, Water pollution control, Water supply.

**Authority:** 33 U.S.C. 1321(c)(2); 42 U.S.C. 9601–9657; E.O. 12777, 56 FR 54757, 3 CFR, 1991 Comp., p. 351; E.O. 12580, 52 FR 2923; 3 CFR, 1987 Comp., p. 193.

Dated: July 19, 2002.

**A. Stanley Meiburg,**

*Acting Regional Administrator, Region 4.*

[FR Doc. 02–23585 Filed 9–18–02; 8:45 am]

BILLING CODE 6560–50–P

**FEDERAL COMMUNICATIONS COMMISSION**

**47 CFR Parts 2, 15, 97 and 101**

**[WT Docket No. 02–146; FCC 02–180]**

## Allocations and Service Rules for the 71–76 GHz, 81–86 GHz and 92–95 GHz Bands

**AGENCY:** Federal Communications Commission.

**ACTION:** Proposed rule.

**SUMMARY:** In this document the Commission examines methods to promote the commercial development and growth of the ''millimeter wave'' spectrum in the 71–76 GHz, 81–86 GHz and 92–95 GHz bands under parts 15 and 101 of our rules. This action follows was taken pursuant to our mandate under section 7(a) and 303(g) of the Communications Act and a in response to a Petition for Rulemaking filed by Loea Communications requesting service rules for these bands. We anticipate that the proposals set forth herein will encourage the use of technologies, developed in military and scientific applications in commercial products and services.

**DATES:** Comments are due on or before December 18, 2002, and reply comments are due on or before February 3, 2003.

**ADDRESSES:** Federal Communications Commission 445 12th Street, SW., TW–A325, Washington, DC 20554. See **SUPPLEMENTARY INFORMATION** for filing instructions.

**FOR FURTHER INFORMATION CONTACT:** Michael Marcus, Office of Engineering and Technology, (202) 418–2418, TTY (202) 418–2989, e-mail *mmarcus@fcc.gov*, or Brian O'Donnell, Policy and Rules Branch, Public Safety and Private Wireless Division, Wireless Telecommunications Bureau, (202) 418–2135, email *bodonnel@fcc.gov*.

**SUPPLEMENTARY INFORMATION:** This is a summary of the Federal Communications Commission's Notice of Proposed Rulemaking, FCC 02–180, adopted on June 13, 2002 and released on June 28, 2002. The full text of this document is available for inspection and copying during normal business hours in the FCC Reference Center, Room CY–A257, 445 12th Street, SW., Washington, DC 20554. The complete text may be purchased from the Commission's copy contractor, Qualex International, 445 12th Street, SW., Room CY–B402, Washington, DC 20554. The full text may also be downloaded at: *www.fcc.gov* via the Internet. Alternative formats are available to persons with disabilities by contacting Brian Millin at (202) 418–7426 or TTY (202) 418–7365.

1. With this *Notice of Proposed Rulemaking (NPRM)*, we examine methods to promote the commercial development and growth of the ''millimeter wave'' spectrum in the 71–76 GHz, 81–86 GHz and 92–95 GHz bands under parts 15 and 101 of our rules. This action follows an initiative by our Office of Engineering and Technology concerning possible development of these bands. We also take this action pursuant to our mandate under sections 7(a) and 303(g) of the Communications Act of 1934, as amended, ''to encourage the provision of new technologies and services to the public'' and ''encourage the larger and more effective use of radio in the public interest.'' We also seek comment on a proposal by Loea Communications Corporation (''Loea'') to establish service rules for the licensed use of the 71–76 GHz and 81–86 GHz bands. We seek to develop a flexible and streamlined regulatory framework that will encourage innovative uses of the spectrum; accommodate future developments in technology and equipment; promote competition in the communications services, equipment and related markets; and advance the potential sharing between non-Federal Government and Federal Government systems. Additionally, we anticipate that our proposals will encourage the use of technologies developed in military and scientific applications in a broad range of new products and services, such as high-speed wireless local area networks and broadband access systems for the Internet.

2. In July 2000, the Commission held a public forum on possible new uses of the 92–95 GHz band. Several speakers at the forum indicated that due to recent technological developments, new uses of this band are approaching practicality. In addition, in July 2001, Loea experimented with technology it developed for use of the 71–76 GHz and 81–86 GHz bands. As a result, Loea filed a petition requesting the establishment of service rules for the licensed use of the 71–76 GHz and 81–86 GHz bands on September 10, 2001. Accordingly, we seek comment on our proposed rules to allow use of the 71–76 GHz, 81–86 GHz, 92–94 GHz and 94.1–95 GHz bands for a broad range of new fixed and mobile services. These proposals include allocation changes to the bands as well as provisions to ensure that new non-Federal Government operations can share the available frequencies with Federal Government operations in the same bands and protect operations in adjacent bands. Specifically, we seek comment on the following issues regarding use of the 71–76 GHz, 81–86 GHz and 92–95 GHz bands:

- Reallocating the 71–76 GHz, 81–86 GHz and 92–95 GHz bands to update the current allocations, which were established at the World Administration Radio Conference (Geneva, 1979) (WARC–79);
- Developing an appropriate band plan for the 71–76 GHz, 81–86 GHz and 92–95 GHz bands;
- Providing for unlicensed use of the 92–95 GHz band;
- Authorizing the new licensed services under part 101 of our rules and the new unlicensed devices under part 15 of our rules;
- The appropriate means of licensing spectrum for these bands (*e.g.*, geographic service areas or site-based licenses);
- Whether to permit licensees to select licensing as a band manager or as a regular non-band manager licensee; and
- Developing an appropriate eligibility standard for potential licensees.

### Procedural Matters

*1. Initial Regulatory Flexibility Analysis*

3. As required by section 603 of the Regulatory Flexibility Act, the Commission has prepared an Initial Regulatory Flexibility Analysis (IRFA) of the expected impact on small entities of the proposals suggested in this document. The IRFA is set forth in paragraph 15. Written public comments are requested on the IRFA. In order to fulfill the mandate of the Contract with America Advancement Act of 1996 regarding the Final Regulatory Flexibility Analysis, we ask a number of questions regarding the prevalence of small businesses in the affected industries.

4. Comments must be filed in accordance with the same filing deadlines as comments filed in this *NPRM*, but they must have a separate and distinct heading designating them as responses to the IRFA. The Commission's Consumer Information Bureau, Reference Information Center, *shall send* a copy of this *NPRM*, including the IRFA, to the Chief Counsel for Advocacy of the Small Business Administration in accordance with Section 603(a) of the Regulatory Flexibility Act.

*2. Ex Parte Rules—Permit-But-Disclose Proceedings*

5. This is a permit-but-disclose notice and comment rule making proceeding. *Ex parte* presentations are permitted,

except during the Sunshine Agenda period, provided they are disclosed as provided in the Commission's rules. *See generally* 47 CFR 1.1202, 1.1203, 1.2306(a).

*3. Comment Dates*

6. Pursuant to §§ 1.415 and 1.419 of our rules, interested parties may file comments on or before December 18, 2002, and reply comments on or before February 3, 2003. Comments may be filed using the Commission's Electronic Comment Filing System (ECFS), *http://www.fcc.gov/e-file/ecfs.html*, or by filing paper copies.

7. Comments filed through the ECFS can be sent as an electronic file via the Internet to *http://www.fcc.gov/e-file/ecfs.html*. Generally, only one copy of an electronic submission must be filed. If multiple docket or rulemaking numbers appear in the caption of this proceeding, however, commenters must transmit one electronic copy of the comments to each docket or rulemaking number referenced in the caption. In completing the transmittal screen, commenters should include their full name, U.S. Postal Service mailing address, and the applicable docket or rulemaking number. Parties may also submit an electronic comment by Internet e-mail. To get filing instructions for e-mail comments, commenters should send an e-mail to *ecfs@fcc.gov*, and should including the following words in the body of the message, ''get form <your e-mail address.'' A sample form and directions will be sent in reply.

8. Parties who choose to file by paper must file an original and four copies of each filing. If more than one docket or rule making number appear in the caption of this proceeding, commenters must submit two additional copies for each additional docket or rulemaking number. Filings can be sent by hand or messenger delivery, by commercial overnight courier, or by first-class or overnight U.S. Postal Service mail (although we continue to experience delays in receiving U.S. Postal Service mail). The Commissioner's contractor, Vistronix, Inc., will receive hand-delivered or messenger-delivered paper filings for the Commission's Secretary at 236 Massachusetts Avenue, NE., Suite 110, Washington, DC 20002. The filing hours at this location are 8 a.m. to 7 p.m. All hand deliveries must be held together with rubber bands or fasteners. Any envelopes must be disposed of before entering the building. Commercial overnight mail (other than U.S. Postal Service Express Mail and Priority Mail) must be sent to 9300 East Hampton Drive, Capitol Heights, MD 20743. U.S. Postal Service first-class mail, Express Mail, and Priority Mail should be addressed to 445 12th Street, SW., TW–A325, Washington, DC 20554. All filings must be addressed to the Commissioner's Secretary, Office of the Secretary, Federal Communications Commission.

9. Parties who choose to file by paper should also submit their comments on diskette. Such a submission should be on a 3.5-inch diskette formatted in an IBM compatible format using Microsoft Word or compatible software. The diskette should be accompanied by a cover letter and should be submitted in ''read only'' mode. The diskette should be clearly labeled with the commenter's name, proceeding (including the lead docket number, type of pleading (comment or reply comment), date of submission, and the name of the electronic file on the diskette. The label should also include the following phrase ''Disk Copy—Not an Original.'' Each diskette should contain only one party's pleading, preferably in a single electronic file. In addition, commenters must send diskette copies to the Commission's copy contract, Qualex International, Portals II, 445 12th Street, SW., Room CY–B402, Washington, DC 20554, telephone 202–863–2893, facsimile 202–863–2898, or via e-mail *qualexint@aol.com*.

10. Alternative formats (computer diskette, large print, audio cassette and Braille) are available to persons with disabilities by contacting Brian Millin at (202) 418–7426, TTY (202) 418–7365 or via e-mail to *bmillin@fcc.gov/oet*. This Notice can also be downloaded at *http://www.fcc.gov/oet*.

11. The World Wide Web addresses/URLs that we give here were correct at the time this document was prepared but may change over time. They are included herein in addition to the conventional citations as a convenience to readers. We are unable to update these URLs after adoption of this *NPRM*, and readers may find some URLs to be out of date as time progresses. We also advise readers that the only definitive text of FCC documents is the one that is published in the FCC Record. In case of discrepancy between the electronic documents cited here and the FCC Record, the version in the FCC Record is definitive.

**Initial Regulatory Flexibility Analysis**

12. As required by the Regulatory Flexibility Act of 1980, as amended (RFA), the Commission has prepared this present Initial Regulatory Flexibility Analysis (IRFA) of the possible significant economic impact on a substantial number of small entities by the policies and rules proposed in this *Notice of Proposed Rule Making (NPRM)*. Written public comments are requested on this IRFA. Comments must be identified as responses to the IRFA and must be filed by the deadlines for comments on the *NPRM* provided in paragraph 124 of the item. The Commission will send a copy of this *NPRM*, including this IRFA, to the Chief Counsel for Advocacy of the Small Business Administration (SBA). In addition, the *NPRM* and IRFA (or summaries thereof) will be published in the **Federal Register**.

*A. Need for, and Objectives of, the Proposed Rules*

13. In this *NPRM*, we examine methods to promote the development and growth of the 71–76 GHz, 81–86 GHz and 92–95 GHz bands to encourage the provisions of new technologies and services to the public and encourage the larger and more effective use of wireless in the public interest. We believe that this *NPRM* will set the framework for the establishment of new wireless services in the 71–76 GHz, 81–86 GHz and 92–95 GHz bands.

14. We seek comment on the following issues under consideration in this *NPRM*:

- Reallocating the 71–76 GHz, 81–86 GHz and 92–95 GHz bands in order to more fully comply with the allocations established at the World Administrative Radio Conference;
- Providing licensees in the 71–76 GHz and 81–86 GHz access to the entire spectrum to provide sufficient capacity for licensees to utilize and provide new innovative services to the public;
- Dividing the 92–95 GHz band into licensed use and unlicensed use in order to stimulate growth in the band while providing adequate protection to the Government operations in the band and to operations in the adjacent spectrum;
- Authorizing the 71–76 GHz, 81–86 GHz and portions of the 92–95 GHz under part 101 of our rules in order to facilitate investment capital for business;
- Whether to license the new services by geographic service areas or by site-by-site licensing;
- Licensing the spectrum to individual licensees and band managers to optimize the use of the spectrum and to provide maximum flexibility for potential licensees and new services;
- Proposing open eligibility, rather than imposing eligibility restrictions, to allow market forces to guide license assignment absent a compelling showing that regulatory intervention to

exclude potential participants is necessary;

- Adopting a 10-year license term and providing licensees with a renewal expectancy upon establishing substantial service in order to provide a stable regulatory environment that will be attractive to investors and will thus encourage development of the spectrum; and
- Allowing licensees to partition and disaggregate their spectrum to provide an opportunity for a wide range of applicants, including small business, rural telephone, minority-owned and women-owned applicants.

*B. Legal Basis*

15. The proposed action is authorized under sections 4(i), 301, 302, 303(e), 303(f), 303(r), 304 and 307 of the Communications Act of 1934, as amended, 47 U.S.C. 154(i), 301, 302, 303(e), 303(f), 303(r), 304, 307.

*C. Description and Estimate of the Number of Small Entities to Which the Proposed Rules Will Apply*

16. The RFA directs agencies to provide a description of and, where feasible, an estimate of the number of small entities that may be affected by the proposed rules. The RFA generally defines the term ''small entity'' as having the same meaning as the terms, ''small business,'' ''small organization,'' and ''small governmental jurisdiction.'' In addition, the term ''small business'' has the same meaning as the term ''small business concern'' under the Small Business Act. A small business concern is one which: (1) Is independently owned and operated; (2) is not dominant in its field of operation; and (3) satisfies any additional criteria established by the SBA. A small organization is generally ''any not-for-profit enterprise which is independently owned and operated and is not dominant in its field.'' Nationwide, as of 1992, there were approximately 275,801 small organizations.

17. The Commission has not developed a definition of small entities applicable to Radio Frequency Equipment Manufacturers (RF Manufacturers). Therefore, the applicable definition of small entity is the definition under the SBA rules applicable to manufacturers of ''Radio and Television Broadcasting and Communications Equipment.'' According to the SBA's regulation, an RF manufacturer must have 750 or fewer employees in order to qualify as a small business. Census Bureau data indicates that there are 858 companies in the United States that manufacture radio and television broadcasting and communications equipment, and that 778 of these firms have fewer than 750 employees and would be classified as small entities. Therefore, we believe that many of the companies that manufacture RF equipment may qualify as small entities.

18. The Commission has proposed to assign licenses in the 71–76 GHz, 81–86 GHz and 92–95 GHz bands by competitive bidding. The Commission has not yet determined how many licenses will be awarded. Moreover, the Commission does not know how many licensees will partition their license areas or disaggregate their spectrums, if partitioning and disaggregation are allowed. Therefore, the exact number of smaller licensees in these bands to which the proposed rules will apply cannot be known precisely at this time.

*D. Description of Projected Reporting, Recordkeeping, and Other Compliance Requirements*

19. Equipment designed for unlicensed use will be subject to the existing requirements of subpart J of part 2 of our rules, which governs equipment authorization procedures. In addition, winning bidders for licensed use must submit long-form license applications through the Universal Licensing System using FCC Form 601, and other appropriate forms. Licensees will also be required to apply for an individual station license by filing FCC Form 601 for those individual stations that (1) require submission of an Environmental Assessment of the facilities under § 1.1307 of our rules; (2) require international coordination of the application; or (3) require coordination with the Frequency Assignment Subcommittee (FAS) of the Interdepartment Radio Advisory Committee (IRAC). While these requirements are new with respect to potential licensees in the 71–76 GHz, 81–86 GHz and 92–95 GHz bands, the Commission has applied these requirements to licensees in other bands.

*E. Steps Taken To Minimize Significant Economic Impact on Small Entities, and Significant Alternatives Considered*

20. The RFA requires an agency to describe any significant alternatives that it has considered in reaching its proposed approach, which may include the following four alternatives: ''(1) The establishment of differing compliance or reporting requirements or timetables that take into account the resources available to small entities; (2) the clarification, consolidation, or simplification of compliance or reporting requirements under the rule for such small entities; (3) the use of performance, rather than design standards; and (4) an exemption from coverage of the rule, or any part thereof, for small entities.''

21. We believe that the rules proposed in this *NPRM* provide a flexible and efficient approach to spectrum management. To minimize any negative impact on smaller entities, however, we propose certain incentives for small entities that will be to their benefit. For example, we seek comment on licensing the spectrum to band managers that will be authorized to lease portions of their spectrum to all entities, including smaller entities, and to allow partitioning and spectrum disaggregation. These provisions will enable smaller entities, which sometimes may lack sufficient resources to bid in the auction on an equally competitive basis, to acquire smaller portions of the spectrum. The use of smaller licensing areas could also benefit small entities by reducing costs and build out expenses.

22. We also propose bidding credits for smaller entities that participate in auctions of licenses that are conducted pursuant to the rules proposed in this *NPRM.* Specifically, we propose to define an ''entrepreneur'' as an entity with average annual gross revenues not exceeding $40 million for three preceding years and we propose to define a ''small business'' as an entity with an average annual gross revenues not exceeding $15 million for three preceding years. We believe that these small business definitions and bidding credits will help small entities compete in our auctions and acquire licenses.

23. In addition, we propose to adopt a 10-year license term and provide licensees with a renewal expectancy upon establishing substantial service. We believe these provisions will provide a stable regulatory environment that will be attractive to investors and thus enable smaller entities to acquire the necessary capital to operate in the spectrum.

24. The regulatory burdens we have retained, such as filing applications on appropriate forms, are necessary in order to ensure that the public receives the benefits of innovative new services in a prompt and efficient manner and apply equally to large and small entities, thus without differential impact. We will continue to examine alternatives in the future with the objectives of eliminating unnecessary regulations and minimizing any significant impact on small entities.

*F. Federal Rules That May Duplicate, Overlap, or Conflict With the Proposed Rule*

25. None.

*G. Ordering Clause*

26. *It is further ordered* that the Commission's Consumer & Governmental Affairs Bureau, Reference Information Center, *shall send* a copy of this *Notice for Proposed Rule Making,* including the Initial Regulatory Flexibility Analysis, to the Chief Counsel for Advocacy of the Small Business Administration.

**Ordering Clause**

27. The Commission's Consumer and Governmental Affairs Bureau, Reference Information Center, *shall send* a copy of this *Notice of Proposed Rule Making,* including the Initial Regulatory Flexibility Analysis, to the Chief Counsel for Advocacy of the Small Business Administration in accordance with section 603(a) of the Regulatory Flexibility Act, 5 U.S.C. 603(a).

28. Pursuant to the authority contained in sections 4, 4(i), 157, 303,303(g), 303(r), 307 and 332(c)(7) of the Communications Act of 1934, as amended, 47 U.S.C. 154, 154(i), 157, 303, 303(g), 303(r), 307, this *Notice of Proposed Rule Making is adopted.*

**List of Subjects in 47 CFR Parts 2, 15, 97 and 101**

Communications equipment, Radio, Reporting and recordkeeping requirements.

Federal Communications Commission.

**Marlene H. Dortch,**

*Secretary.*

**Rule Changes**

1. For the reasons discussed in the preamble, the Federal Communications Commission proposes to amend 47 CFR Parts 2, 15, 97, and 101 as follows:

## PART 2—FREQUENCY ALLOCATIONS AND RADIO TREATY MATTERS; GENERAL RULES AND REGULATIONS

2. The authority citation for part 2 continues to read as follows:

**Authority:** 47 U.S.C. 154, 302a, 303, and 336, unless otherwise noted.

3. Section 2.106, the Table of Frequency Allocations, is amended as follows:

a. Revise pages 81 through 83.

b. In the list of United States (US) Footnotes, revise footnotes US211, US297, and US342; remove footnote US270; and add footnotes USwww, USxxx, USyyy, and USzzz.

The additions and revisions read as follows:

**§ 2.106 Table of Frequency Allocations.**

* * * * *

BILLING CODE 6712–01–P

65-94.1 GHz (EHF) — Page 81

| International Table | | | United States Table | | FCC Rule Part(s) |
|---|---|---|---|---|---|
| Region 1 | Region 2 | Region 3 | Federal Government | Non-Federal Government | |
| 65-66<br>EARTH EXPLORATION-SATELLITE<br>FIXED<br>INTER-SATELLITE<br>MOBILE except aeronautical mobile<br>SPACE RESEARCH<br><br>5.547 | | | 65-66<br>EARTH EXPLORATION-SATELLITE<br>FIXED<br>MOBILE except aeronautical mobile<br>SPACE RESEARCH | 65-66<br>EARTH EXPLORATION-SATELLITE<br>FIXED<br>INTER-SATELLITE<br>MOBILE except aeronautical mobile<br>SPACE RESEARCH | |
| 66-71<br>INTER-SATELLITE<br>MOBILE 5.553 5.558<br>MOBILE-SATELLITE<br>RADIONAVIGATION<br>RADIONAVIGATION-SATELLITE<br><br>5.554 | | | 66-71<br>MOBILE 5.553 5.558<br>MOBILE-SATELLITE<br>RADIONAVIGATION<br>RADIONAVIGATION-SATELLITE<br><br>5.554 | 66-71<br>INTER-SATELLITE<br>MOBILE 5.553 5.558<br>MOBILE-SATELLITE<br>RADIONAVIGATION<br>RADIONAVIGATION-SATELLITE<br><br>5.554 | |
| 71-74<br>FIXED<br>FIXED-SATELLITE (space-to-Earth)<br>MOBILE<br>MOBILE-SATELLITE (space-to-Earth) | | | 71-74<br>FIXED<br>FIXED-SATELLITE (space-to-Earth)<br>MOBILE<br>MOBILE-SATELLITE (space-to-Earth) | | Fixed Microwave (101) |
| 74-76<br>FIXED<br>FIXED-SATELLITE (space-to-Earth)<br>MOBILE<br>BROADCASTING<br>BROADCASTING-SATELLITE<br>Space research (space-to-Earth)<br><br>5.559A 5.561 | | | 74-76<br>FIXED<br>FIXED-SATELLITE (space-to-Earth)<br>MOBILE<br>Space research (space-to-Earth)<br><br>US211 USwww USyyy | 74-76<br>FIXED<br>FIXED-SATELLITE (space-to-Earth)<br>MOBILE<br>BROADCASTING<br>BROADCASTING-SATELLITE<br>Space research (space-to-Earth)<br><br>US211 USwww USyyy | |
| 76-81<br>RADIOLOCATION<br>Amateur<br>Amateur-satellite<br>Space research (space-to-Earth) | | | 76-81<br>RADIOLOCATION | 76-77<br>RADIOLOCATION<br>Amateur | RF Devices (15) |
| | | | | 77-77.5<br>RADIOLOCATION<br>Amateur<br>Amateur-satellite | Amateur (97) |
| | | | | 77.5-78<br>RADIOLOCATION<br>AMATEUR<br>AMATEUR-SATELLITE | |

| | | | |
|---|---|---|---|
| 5.560 | 5.560 | 78-81<br>RADIOLOCATION<br>Amateur<br>Amateur-satellite<br><br>5.560 | |
| 81-84<br>FIXED<br>FIXED-SATELLITE (Earth-to-space)<br>MOBILE<br>MOBILE-SATELLITE (Earth-to-space)<br>RADIO ASTRONOMY<br>Space research (space-to-Earth)<br><br>5.149 5.560A | 81-84<br>FIXED<br>FIXED-SATELLITE (Earth-to-space) US297<br>MOBILE<br>MOBILE-SATELLITE (Earth-to-space)<br>RADIO ASTRONOMY USzzz<br>Space research (space-to-Earth)<br><br>US342 | | Fixed Microwave (101) |
| 84-86<br>FIXED<br>FIXED-SATELLITE (Earth-to-space) 5.561A<br>MOBILE<br>RADIO ASTRONOMY<br><br>5.149 | 84-86<br>FIXED<br>FIXED-SATELLITE (Earth-to-space)<br>MOBILE<br>RADIO ASTRONOMY USzzz<br><br>US342 | | |
| 86-92<br>EARTH EXPLORATION-SATELLITE (passive)<br>RADIO ASTRONOMY<br>SPACE RESEARCH (passive)<br><br>5.340 | 86-92<br>EARTH EXPLORATION-SATELLITE (passive)<br>RADIO ASTRONOMY US74<br>SPACE RESEARCH (passive)<br><br>US246 | | |
| 92-94<br>FIXED<br>MOBILE<br>RADIO ASTRONOMY<br>RADIOLOCATION<br><br>5.149 | 92-94<br>FIXED<br>MOBILE<br>RADIO ASTRONOMY USzzz<br>RADIOLOCATION<br><br>US342 USxxx | | Fixed Microwave (101) |
| 94-94.1<br>EARTH EXPLORATION-SATELLITE (active)<br>RADIOLOCATION<br>SPACE RESEARCH (active)<br>Radio astronomy<br><br>5.562 5.562A | 94-94.1<br>EARTH EXPLORATION-<br>SATELLITE (active)<br>RADIOLOCATION<br>SPACE RESEARCH (active)<br>Radio Astronomy<br><br>5.562 5.562A | 94-94.1<br>RADIOLOCATION<br>Radio astronomy<br><br>5.562A | |

| 94.1-150 GHz (EHF) | | | | | Page 83 |
|---|---|---|---|---|---|
| International Table | | | United States Table | | FCC Rule Part(s) |
| Region 1 | Region 2 | Region 3 | Federal Government | Non-Federal Government | |
| 94.1-95<br>FIXED<br>MOBILE<br>RADIO ASTRONOMY<br>RADIOLOCATION<br>5.149 | | | 94.1-95<br>FIXED<br>MOBILE<br>RADIO ASTRONOMY USzzz<br>RADIOLOCATION<br>US342 USxxx | | Fixed Microwave (101) |
| 95-100<br>MOBILE 5.553<br>MOBILE-SATELLITE<br>RADIONAVIGATION<br>RADIONAVIGATION-SATELLITE<br>Radiolocation<br>5.149 5.554 5.555 | | | 95-100<br>MOBILE 5.553<br>MOBILE-SATELLITE<br>RADIONAVIGATION<br>RADIONAVIGATION-SATELLITE<br>Radiolocation<br>5.149 5.554 | | |
| 100-102<br>EARTH EXPLORATION-SATELLITE (passive)<br>FIXED<br>MOBILE<br>SPACE RESEARCH (passive)<br>5.341 | | | 100-102<br>EARTH EXPLORATION-SATELLITE (passive)<br>SPACE RESEARCH (passive)<br>5.341 US246 | | |
| 102-105<br>FIXED<br>FIXED-SATELLITE (space-to-Earth)<br>MOBILE<br>5.341 | | | 102-105<br>FIXED<br>FIXED-SATELLITE (space-to-Earth)<br>5.341 US211 | | |
| 105-116<br>EARTH EXPLORATION-SATELLITE (passive)<br>RADIO ASTRONOMY<br>SPACE RESEARCH (passive)<br>5.340 5.341 | | | 105-116<br>EARTH EXPLORATION-SATELLITE (passive)<br>RADIO ASTRONOMY US74<br>SPACE RESEARCH (passive)<br>5.341 US246 | | |
| 116-119.98<br>EARTH EXPLORATION-SATELLITE (passive)<br>FIXED<br>INTER-SATELLITE<br>MOBILE 5.558<br>SPACE RESEARCH (passive)<br>5.341 | | | 116-119.98<br>EARTH EXPLORATION-SATELLITE (passive)<br>FIXED<br>INTER-SATELLITE<br>MOBILE 5.558<br>SPACE RESEARCH (passive)<br>5.341 US211 US263 | | |

BILLING CODE 6712–01–C

* * * * *

**United States (US) Footnotes**

* * * * *

US211 In the bands 1670–1690, 5000–5250 MHz and 10.7–11.7, 15.1365–15.35, 15.4–15.7, 22.5–22.55, 24–24.05, 31.0–31.3, 31.8–32.0, 40.5–42.5, 102–105, 116–126, 151–164, 176.5–182, 185–190, 231–235, 252–265 GHz, applicants for airborne or space station assignments are urged to take all practicable steps to protect radio astronomy observations in the adjacent bands from harmful interference; however, US74 applies.

* * * * *

US297 The bands 47.2–49.2 GHz and 81–82.5 GHz are also available for feeder links for the broadcasting-satellite service.

* * * * *

US342 In making assignments to stations of other services to which the bands:

13360–13410 kHz,
37.5–38.25 MHz,
322–328.6 MHz*,
1330–1400 MHz*,
1610.6–1613.8 MHz*,
1660–1670 MHz,
3260–3267 MHz*,
3332–3339 MHz*,
3345.8–3352.5 MHz*,
4825–4835 MHz*,
14.47–14.5 GHz*,
22.01–22.21 GHz*,
22.21–22.5 GHz,
22.81–22.86 GHz*,
23.07–23.12 GHz*,
31.2–31.3 GHz,
36.43–36.5 GHz*,
42.5–43.5 GHz,
48.94–49.04 GHz*,
81–86 GHz,
92–94 GHz,
93.07–93.27 GHz*,
94.1–95 GHz,
97.88–98.08 GHz*,
140.69–140.98 GHz*,
144.68–144.98 GHz*,
145.45–145.75 GHz*,
146.82–147.12 GHz*,
150–151 GHz*,
174.42–175.02 GHz*,
177–177.4 GHz*,
178.2–178.6 GHz*,
181–181.46 GHz*,
186.2–186.6 GHz*,
250–251 GHz*,
257.5–258 GHz*,
261–265 GHz,
262.24–262.76 GHz*,
265–275 GHz,
265.64–266.16 GHz*,
267.34–267.86 GHz*,
271.74–272.26 GHz*

are allocated (* indicates radio astronomy use for spectral line observations), all practicable steps shall be taken to protect the radio astronomy service from harmful interference. Emissions from spaceborne or airborne stations can be particularly serious sources of interference to the radio astronomy service (see Nos. 4.5 and 4.6 and Article 29 of the ITU Radio Regulations).

* * * * *

USwww In the band 74–76 GHz, stations in the fixed, mobile and broadcasting services shall not cause harmful interference to stations of the Federal Government fixed-satellite service.

USxxx In the band 92–95 GHz, Federal and non-Federal users may operate low power, unlicensed devices. In the band 92–92.3 GHz and 93.2–94.1 GHz, Federal assignments shall operate on a primary basis. In the bands 92.3–93.2 GHz and 94.1–95 GHz, non-Federal licensed systems shall operate on a primary basis and Federal assignments may operate on a secondary basis, except that Federal assignments at the following military installations shall operate on a primary basis: [NTIA will supply the list of large military installations prior to the adoption of the Report and Order].

USyyy The band 75.5–76 GHz is also allocated to the amateur and amateur-satellite services on a secondary basis until January 1, 2006.

USzzz In the bands 81–86 GHz, 92–94 GHz, and 94.1–95 GHz, the radio astronomy service shall not receive protection from other allocated services, except within the maximum coordination distances listed for the following radio astronomy observatories.

| Telescope and site | 150 kilometer (93 mile) radius centered on: | |
|---|---|---|
| | North latitude | West longitude |
| National Radio Astronomy Observatory (NRAO), Robert C. Byrd Telescope, Green Bank, WV | 38°25′59″ | 79°50′24″ |
| NRAO, Very Large Array, Socorro, NM | 34°04′44″ | 107°37′06″ |
| University of Arizona 12-m Telescope, Kitt Peak, AZ | 31°57′10″ | 111°36′50″ |
| BIMA Telescope, Hat Creek, CA | 40°49′04″ | 121°28′24″ |
| Caltech Telescope, Owens Valley, CA | 37°13′54″ | 118°17′36″ |
| Five Colleges Observatory, Amherst, MA | 42°23′33″ | 72°20′40″ |
| Haystack Observatory, Westford, MA | 42°37′23″ | 71°29′19″ |
| James Clerk Maxwell Telescope, Mauna Kea, HI | 19°49′33″ | 155°28′20″ |

| NRAO, Very Long Baseline Array Stations | 25 kilometer (15.5 mile) radius centered on: | |
|---|---|---|
| | North latitude | West longitude |
| Brewster, WA | 48°07′52″ | 119°41′00″ |
| Fort Davis, TX | 30°38′06″ | 103°56′41″ |
| Hancock, NH | 42°56′01″ | 71°59′12″ |
| Kitt Peak, AZ | 31°57′23″ | 111°36′45″ |
| Los Alamos, NM | 35°46′31″ | 106°14′44″ |
| Mauna Kea, HI | 19°48′05″ | 155°27′19″ |
| North Liberty, IA | 41°46′17″ | 91°34′27″ |
| Owens Valley, CA | 37°13′54″ | 118°16′37″ |
| Pie Town, NM | 34°18′04″ | 108°07′09″ |
| Saint Croix, VI | 17°45′24″ | 64°35′01″ |

* * * * *

## PART 15—RADIO FREQUENCY DEVICES

4. The authority citation continues to read as follows:

**Authority:** 47 U.S.C. 154, 302, 303, 304, 307, 336 and 544A.

5. Section 15.257 is added to subpart C to read as follows:

**§ 15.257 Operation within the band 92–95 GHz.**

(a) Operation under the provisions of this section is not permitted for equipment used on aircraft or satellites.

(b) Within the 92–95 GHz band, emission levels shall not exceed the following:

(1) The average power density of any emission, measured during the transmit interval, shall not exceed 9 μW/cm², as measured 3 meters from the radiating structure, and the peak power density of any emission shall not exceed 18 μW cm², as measured 3 meters from the radiating structure.

(2) Peak power density shall be measured with an RF detector that has a detection bandwidth that encompasses the band being used and has a video bandwidth of at least 10 MHz, or using an equivalent measurement method.

(3) The average emission limits shall be calculated, based on the measured peak levels, over the actual time period during which transmission occurs.

(c) Limits on spurious emissions: (1) The power density of any emissions outside the band being used band shall consist solely of spurious emissions.

(2) Radiated emissions below 40 GHz shall not exceed the general limits in § 15.209.

(3) Between 40 GHz and 200 GHz, the level of these emissions shall not exceed 90 pW/cm² at a distance of 3 meters.

(4) The levels of the spurious emissions shall not exceed the level of the fundamental emission.

(i) The total peak transmitter output power shall not exceed 500 mW.

(ii) Fundamental emissions must be contained within the frequency bands specified in this section during all conditions of operation. Equipment is presumed to operate over the temperature range -20 to +50 degrees celsius with an input voltage variation of 85% to 115% of rated input voltage, unless justification is presented to demonstrate otherwise.

(iii) Regardless of the power density levels permitted under this section, devices operating under the provisions of this section are subject to the radiofrequency radiation exposure requirements specified in 47 CFR 1.1307(b), 2.1091 and 2.1093, as appropriate. Applications for equipment authorization of devices operating under this section must contain a statement confirming compliance with these requirements for both fundamental emissions and unwanted emissions. Technical information showing the basis for this statement must be submitted to the Commission upon request.

## PART 97—AMATEUR RADIO SERVICE

7. The authority citation for Part 97 continues to read as follows:

**Authority:** 48 Stat. 1066, 1082, as amended; 47 U.S.C. 154, 303. Interpret or apply 48 Stat. 1064–1068, 1081–1105, as amended; 47 U.S.C. 151–155, 301–609, unless otherwise noted.

8. Section 97.303 is revised by adding paragraph (r)(3) to read as follows:

**§ 97.303 Frequency sharing requirements.**

* * * * *

(r) * * *

(3) No amateur or amateur-satellite station transmitting in the 75.5–76 GHz segment shall cause interference to, nor is protected from interference due to the operation of, stations in the fixed service. After January 1, 2006, the 75.5–76 GHz segment is no longer allocated to the amateur service or to the amateur-satellite.

## PART 101—FIXED MICROWAVE SERVICES

9. The authority citation for part 101 continues to read as follows:

**Authority:** 47 U.S.C. 154 and 303, unless otherwise noted.

10. Section 101.101 is amended by adding four new entries in numerical order as follows:

**§ 101.101 Frequency Availablity.**

| Frequency band (MHz) | Radio service | | | | |
|---|---|---|---|---|---|
| | Common carrier (Part 101) | Private radio (Part 101) | Broadcast auxiliary (Part 74) | Other (Parts 15, 21, 22, 24, 25, 74, 78 & 100) | Notes |
| * * * | * | * | | * | * |
| 71,000–76,000 | CC | OFS | | | F/M/TF. |
| 81,000–86,000 | CC | OFS | | | F/M/TF. |
| 92,300–93,200 | CC | OFS | | | F/M/TF. |
| 94,100–95,000 | CC | OFS | | | F/M/TF. |

* * * * *

11. Section 101.107(a) is amended by adding four new entries in numerical order and revising footnote 9 as follows:

**§ 101.107 Frequency tolerance.**

(a) * * *

| Frequency (MHz) | Frequency tolerance (percent) | | |
|---|---|---|---|
| | All fixed and base stations | Mobile stations over 3 watts | Mobile stations 3 watts or less |
| * * * * * | | * | * |
| 71,000 to 76,000 [9] | 0.03 | 0.03 | 0.03 |
| 81,000 to 86,000 [9] | 0.03 | 0.03 | 0.03 |
| 92,300 to 93,200 [9] | | | |

| Frequency (MHz) | Frequency tolerance (percent) | | |
|---|---|---|---|
| | All fixed and base stations | Mobile stations over 3 watts | Mobile stations 3 watts or less |
| 94,100 to 95,000 [9] | ..... | ..... | ..... |

* * * * * * *

[9] Equipment authorized to be operated in the 38,600–40,000 MHz, 71,000–76,000 MHz, 81,000–86,000 MHz, 92,300–93,200 MHz and 94,100–95,000 MHz bands are exempt from the frequency tolerance requirement noted in the above table.

* * * * *

12. Section 101.113(a) is amended by adding four entries in numerical order as follows:

**§ 101.113 Transmitter power limitations**

(a) * * *

| Frequency band (MHz) | Maximum allowable EIRP | |
|---|---|---|
| | Fixed (dBW) | Mobile (dBW) |
| * | * | * |
| 71,000–76,000 | +55 | +55 |
| 81,000–86,000 | +55 | +55 |
| 92,300–93,200 | +55 | +55 |
| 94,100–95,000 | +55 | +55 |

* * * * *

13. Section 101.147(a) is amended by adding four entries in numerical order as follows:

**§ 101.147 Frequency assignments.**

(a) * * *

71,000–76,000 MHz [4 5 11 17 19].

81,000–86,000 MHz [4 5 11 17 19].

92,300–93,200 MHz [17].

94,100–95,000 MHz [17].

* * * * *

[FR Doc. 02–23426 Filed 9–18–02; 8:45 am]

BILLING CODE 6712–01–P

## DEPARTMENT OF TRANSPORTATION

## Research and Special Programs Administration

## 49 CFR Part 195

**[Docket No. RSPA–01–9832]**

**RIN 2137–AD59**

## Pipeline Safety: Hazardous Liquid Pipeline Operator Annual Report Form

**AGENCY:** Office of Pipeline Safety, Research and Special Programs Administration, U.S. Department of Transportation.

**ACTION:** Notice of proposed rulemaking; extension of comment period.

**SUMMARY:** This notice extends the period for public comment from September 24, 2002, to November 22, 2002, on the Notice of Proposed Rulemaking (NPRM) published in the **Federal Register** on July 26, 2002, requiring an annual report for hazardous liquid pipeline operators (proposed form RSPA F7000–1.1).

**DATES:** Comments on the NPRM must be received by November 22, 2002.

**ADDRESSES:** You may submit written comments by mail or in person by delivering an original and two copies to the Dockets Facility, U.S. Department of Transportation, Room PL–401, 400 Seventh Street, SW., Washington, DC 20590–0001. Or, you may submit written comments to the docket electronically at the following Web address: *http://dms.dot.gov. See* the **SUPPLEMENTARY INFORMATION** section for additional filing information.

**FOR FURTHER INFORMATION CONTACT:** Roger Little by phone at (202) 366–4569, by e-mail at *roger.little@rspa.dot.gov,* or by mail at the Office of Pipeline Safety, Room 7128, 400 7th St. SW., Washington, DC, 20590, regarding the subject matter of this notice or to access comments in the docket.

**SUPPLEMENTARY INFORMATION:**

### Filing Information, Electronic Access, and General Program Information

The Dockets facility is open from 10 a.m. to 5 p.m., Monday through Friday, except federal holidays. All comments should identify the docket number of this notice, RSPA–01–9832. You should submit the original and one copy. If you wish to receive confirmation of receipt of your comments, you must include a stamped, self-addressed postcard. To file written comments electronically, after logging onto *http://dms.dot.gov,* click on ''Electronic Submission'' and follow the instructions. You can read comments and other material in the docket at this Web address: *http://dms.dot.gov.* General information about our pipeline safety program is available at *http://ops.dot.gov.*

### Background

On July 26, 2002, the Research and Special Programs Administration's Office of Pipeline Safety (RSPA/OPS) issued a NPRM (67 FR 48844) to require hazardous liquid pipeline operators to submit an annual report (proposed form RSPA F7000–1.1). The report form asks for information that RSPA/OPS does not currently collect, such as: breakout tank location and capacity; hazardous liquid pipeline mileage by State, diameter and decade installed. The report will be due March 15 of each year for the previous calendar year, aligning with the annual reporting schedule for natural gas pipeline operators. RSPA/OPS will use information from the report to more effectively compile national statistics on system inventory; analyze accidents; identify safety problems and potential solutions; and target inspections. The proposed form asks for information similar to information RSPA/OPS currently collects for natural gas pipelines. The proposed information collection is part of RSPA's/OPS's overall strategy for improving the quality of pipeline statistics and addresses a longstanding data gap in hazardous liquid pipeline inventory information.

On August 23, 2002, the American Petroleum Institute (API) and the

Association of Oil Pipelines (AOPL) submitted a request on behalf of their pipeline members for a 60 day extension of the comment period. API and AOPL indicated that additional time would enable operators to better understand the type of data to be collected on the proposed hazardous liquid pipeline annual report and to determine whether operators are now collecting information that would meet the needs of OPS. Because most of the API and AOPL membership is affected by this rulemaking, and because an annual report has never been required of hazardous liquid pipeline operators, RSPA/OPS is extending the deadline for comments on this NPRM. Pursuant to 49 CFR 190.319, good cause has been shown by the petitioners for extension of the comment period, namely, API and AOPL. Extension of the comment period is consistent with the public interest and is granted to all persons.

Issued in Washington, DC, on September 16, 2002.

**Stacey L. Gerard,**

*Associate Administrator for Pipeline Safety.*

[FR Doc. 02–23837 Filed 9–18–02; 8:45 am]

BILLING CODE 4910–60–P

# Notices

Federal Register

Vol. 67, No. 182

Thursday, September 19, 2002

This section of the FEDERAL REGISTER contains documents other than rules or proposed rules that are applicable to the public. Notices of hearings and investigations, committee meetings, agency decisions and rulings, delegations of authority, filing of petitions and applications and agency statements of organization and functions are examples of documents appearing in this section.

## DEPARTMENT OF AGRICULTURE

### Cooperative State Research, Education, and Extension Service

### Solicitation of Input From Stakeholders on Agricultural Research, Extension, and Education Grant Programs Administered by the Cooperative State Research, Education, and Extension Service

**AGENCY:** Cooperative State Research, Education, and Extension Service, USDA.

**ACTION:** Notice of listening session.

**SUMMARY:** Section 102(b) of the Agricultural Research, Extension, and Education Reform Act of 1998 (AREERA) (7 U.S.C. 7612) requires the Cooperative State Research, Education, and Extension Service (CSREES) in establishing priorities for agricultural research, extension, and education activities conducted or funded by CSREES to solicit and consider input and recommendations from persons who conduct or use agricultural research, extension, or education. As part of the Agency's ongoing stakeholder input processes, CSREES is soliciting input and comments on the effectiveness of existing family, consumer, and nutrition research, extension, and education programs administered by CSREES in meeting current and future challenges in the United States' food and agriculture system. As part of this effort, CSREES is planning to conduct a listening session in Kansas City, MO.

**DATES AND ADDRESSES:** The listening session will be held on Tuesday, October 8, 2002, from 8:30 a.m. to 4 p.m. at the Hyatt Regency Crown Center; 2345 McGee Street, Kansas City, MO 64108. Attendees must make their own hotel arrangements.

To aid participants in scheduling their attendance, the following schedule is anticipated for the listening session.

8:30 a.m.–9 a.m.—Introductory Remarks and Background.

9 a.m.–12 p.m.—Scheduled 5-Minute Comment Periods.

1 p.m.–4 p.m.—Scheduled 5-Minute Comment Periods.

**FOR FURTHER INFORMATION CONTACT:** Persons wishing to present oral comments at this meeting are requested to pre-register by contacting Cindy Zluticky at (816) 252–5051, by fax at (816) 252–5575 or by e-mail to *zlutickyc@missouri.edu.*

Written comments also may be submitted for the record by mailing to: CSREES Listening Session; University Outreach and Extension-Jackson County; 1507 South Nolan Road; Independence, Missouri 64055–1307. Please provide three copies of the comments. Comments also may be faxed or sent via e-mail to Cindy Zluticky.

Information gathered from the Listening Session will be available for review on the CSREES Web page (*http://www.reeusda.gov*).

**SUPPLEMENTARY INFORMATION:**

#### Purpose of This Listening Session

In previous listening sessions, CSREES has sought input on a broad array of the Agency's program activities. The purpose of this listening session is to allow CSREES partners and stakeholders an opportunity to provide comments on the effectiveness of the existing family and consumer economics, human development, housing, and nutrition research, extension, and education programs administered by the Agency through its portfolio of competitive, formula-funded, and targeted national initiative programs. CSREES is specifically seeking comments on programs such as, but not limited to, the Hatch Act and Smith-Lever Act formula programs, the Expanded Food and Nutrition Education Program, the Children, Youth, and Families at Risk Program, and the National Research Initiative Nutrition Program. Presenters are encouraged to identify areas of program strengths, gaps in current programs that need to be filled, future program directions, methods to integrate research and extension programs, and potential partnerships with Federal, State, local and private cooperative organizations.

#### Making Reservations To Attend This Listening Session

When making a reservation for a 5-minute oral comment period, participants should provide a title for their presentation. More time may be available in the comment session, depending on the number of people wishing to make a presentation. Reservations will be confirmed on a first-come, first-served basis. Although pre-registration is not required to attend the listening session, it is strongly recommended to ensure that adequate accommodations are available. Participants who require a sign language interpreter or other special accommodations should contact Cindy Zluticky as directed above.

#### Background on Listening Sessions and CSREES Programs

Section 102(b) of AREERA (7 U.S.C. 7612) requires that CSREES, in establishing priorities for agricultural research, extension, and education activities conducted or funded by CSREES, solicit and consider input and recommendations from persons who conduct or use agricultural research, extension, or education. As part of this ongoing effort, CSREES conducts listening sessions to solicit input and comments on the effectiveness of the existing agricultural research, education and extension programs (such as the programs listed above) administered by CSREES in meeting current and future challenges in the food and agricultural sciences.

Section 1402 of the National Agricultural Research, Extension, and Teaching Policy Act of 1977 (NARETPA), 7 U.S.C. 3101, specifies that the purposes of agricultural research, extension, and education are to (1) enhance the competitiveness of the United States agriculture and food industry in an increasingly competitive world environment; (2) increase the long-term productivity of the United States agriculture and food industry while maintaining and enhancing the natural resource base on which rural America and the United States agricultural economy depend; (3) develop new uses and new products for agricultural commodities, such as alternative fuels, and develop new crops; (4) support agricultural research and extension to promote economic opportunity in rural communities and to

meet the increasing demand for information and technology transfer throughout the United States agriculture industry; (5) improve risk management in the United States agriculture industry; (6) improve the safe production and processing of, and adding of value to, United States food and fiber resources using methods that maintain the balance between yield and environmental soundness; (7) support higher education in agriculture to give the next generation of Americans the knowledge, technology, and applications necessary to enhance the competitiveness of United States agriculture; and (8) maintain an adequate, nutritious, and safe supply of food to meet human nutritional needs and requirements.

Section 1404 of NARETPA, 7 U.S.C. 3103, defines ''Food and Agricultural Sciences'' as meaning basic, applied, and developmental research, extension, and teaching activities in food and fiber, agricultural, renewable natural resources, forestry, and physical and social sciences, including activities relating to the following: (1) Animal health, production, and well-being, (2) Plant health and production, (3) Animal and plant germplasm collection and preservation, (4) Aquaculture, (5) Food safety, (6) Soil and water conservation and improvement, (7) Forestry, horticulture, and range management, (8) Nutritional sciences and promotion, (9) Farm enhancement, including financial management, input efficiency, and profitability, (10) Home economics, (11) Rural human ecology, (12) Youth development and agricultural education, including 4–H clubs, (13) Expansion of domestic and international markets for agricultural commodities and products, including agricultural trade barrier identification and analysis, (14) Information management and technology transfer related to agriculture, (15) Biotechnology related to agriculture, and (16) The processing, distributing, marketing, and utilization of food and agricultural products.

CSREES currently supports agricultural research, extension and education activities through a broad array of programs which includes both formula funded and competitively awarded grant programs. The formula funded programs include the agricultural research programs authorized under the Hatch Act (7 U.S.C. 361a *et seq.*) for the State Agricultural Experiment Stations; section 1445 of NARETPA (7 U.S.C. 3222) for the 1890 Land-Grant Institutions including Tuskegee University and West Virginia State College; the McIntire-Stennis Cooperative Forestry Act (16 U.S.C. 582a *et seq.*); and section 1433 of NARETPA (7 U.S.C. 3195) for the Animal Health and Disease Research program. The agricultural extension programs are funded under section 3 of the Smith-Lever Act (7 U.S.C. 343) for the cooperative extension services at the 1862 Land-Grant Institutions; section 3(d) of the Smith-Lever Act (7 U.S.C. 343(d)) for targeted, national programs; and section 1444 of NARETPA (7 U.S.C. 3221) for the 1890 Land-Grant Institutions including Tuskegee University and West Virginia State College. Section 534(a) of the Equity in Educational Land-Grant Status Act of 1994 (7 U.S.C. 301 note) authorizes funding for the 1994 Institutions to strengthen their teaching programs in food and agricultural sciences.

The CSREES competitive grant programs include the National Research Initiative authorized under section 2(b) of the Competitive, Special, and Facilities Research Grant Act (7 U.S.C. 450i); the Initiative for Future Agriculture and Food Systems authorized under section 401 of AREERA (7 U.S.C. 7621); the Integrated Research, Education, and Extension Competitive Grants Program authorized under section 406 of AREERA (7 U.S.C. 7626); the Food and Agricultural Sciences National Needs Graduate Fellowship Grants Program authorized under section 1417(b)(6) of NARETPA (7 U.S.C. 3152(b)(6)); the Higher Education Challenge Grants Program authorized under section 1417(b)(1) of NARETPA (7 U.S.C. 3152(b)(1)); the Secondary Agriculture Education Challenge Grants Program authorized under section 1417(j) of NARETPA (7 U.S.C. 3152(j)); and the Hispanic-Serving Institutions Education Grants Program authorized under section 1455 of NAREPTA (7 U.S.C. 3241). In addition, sections 535 and 536 of the Equity in Educational Land-Grant Status Act of 1994 (7 U.S.C. 301 note) authorize competitive capacity building and research grant programs for the 1994 Institutions. Further information about CSREES grant programs is available through the CSREES Web page at *http://www.reeusda.gov* as the above list of CSREES grant programs is not exhaustive.

A majority of the agricultural research, extension, and education activities funded by CSREES are conducted through the 1862 Land-Grant Institutions which were established under the First Morrill Act (7 U.S.C. 301 *et seq.*); the 1890 Land-Grant Institutions under the Second Morrill Act (7 U.S.C. 321 *et seq.*); and the 1994 Institutions under the Equity in Educational Land-Grant Status Act of 1994 (7 U.S.C. 301 note).

Done at Washington, DC, this 13th day of September, 2002.

**Colien Hefferan,**

*Administrator, Cooperative State Research, Education, and Extension Service.*

[FR Doc. 02–24012 Filed 9–18–02; 8:45 am]

BILLING CODE 3410–22–P

---

## DEPARTMENT OF AGRICULTURE

### Forest Service

### Notice of Resource Advisory Committee Meeting

**AGENCY:** Lassen Resource Advisory Committee, Susanville, California, USDA Forest Service.

**ACTION:** Notice of meeting.

**SUMMARY:** Pursuant to the authorities in the Federal Advisory Committees Act (Public Law 92–463) and under the Secure Rural Schools and Community Self-Determination Act of 2000 (Public Law 106–393) the Lassen National Forest's Lassen County Resource Advisory Committee will meet Thursday, October 17, 2002, in Susanville, California for a business meeting. The meetings are open to the public.

**SUPPLEMENTARY INFORMATION:** The business meeting October 17th begins at 9 a.m., at the Lassen National Forest Headquarters Office, Caribou Conference Room, 2550 Riverside Drive, Susanville, CA 96130. Agenda topics will include: Review of previous meeting minutes; RAC member reports; presentation of other County RAC processes to solicit and evaluate projects; develop Lassen County RAC project submittal process; round table discussion to discuss ideas on potential projects; set agenda for next meeting. Time will also be set aside for public comments at the end of the meeting.

**FOR FURTHER INFORMATION CONTACT:** Robert Andrews, Eagle Lake District Ranger and Designated Federal Officer, at (530) 257–4188; or Assistant Public Affairs Officer, Leona Rodreick, at (530) 257–2151.

**Elizabeth Norton,**

*Acting Forest Supervisor.*

[FR Doc. 02–23800 Filed 9–18–02; 8:45 am]

BILLING CODE 3410–11–M

**DEPARTMENT OF COMMERCE**

**International Trade Administration**

**[A–570–827]**

## Notice of Amended Final Results and Partial Rescission of Antidumping Duty Administrative Review: Certain Cased Pencils from the People's Republic of China

**AGENCY:** Import Administration, International Trade Administration, Department of Commerce.

**ACTION:** Notice of Amended Final Results and Partial Rescission of Antidumping Duty Administrative Review.

**EFFECTIVE DATE:** September 19, 2002.

**FOR FURTHER INFORMATION CONTACT:** Michele Mire, Paul Stolz, or Crystal Crittenden at (202) 482–4711, (202) 482–4474, or (202) 482–0989, respectively; AD/CVD Enforcement Office IV, Group II, Import Administration, Room 1870, International Trade Administration, U.S. Department of Commerce, 14th Street and Constitution Avenue, NW., Washington, DC 20230.

**SUPPLEMENTARY INFORMATION:**

### The Applicable Statute and Regulations

Unless otherwise indicated, all citations to the statute are references to the provisions effective January 1, 1995, the effective date of the amendments made to the Tariff Act of 1930, as amended (the Act), by the Uruguay Round Agreements Act (URAA). In addition, unless otherwise indicated, all citations to the Department of Commerce (the Department) regulations refer to the regulations codified at 19 CFR part 351 (April 2002).

### Background

On July 25, 2002, the Department of Commerce (the Department) published the final results of the administrative review of the antidumping duty order on pencils from the People's Republic of China (PRC). *See Notice of Final Results and Partial Rescission of Antidumping Duty Administrative Review: Certain Cased Pencils from the People's Republic of China*, 67 FR 48612 (July 25, 2002) (*Final Results*). On July 30, 2002, Kaiyuan Group Corporation (Kaiyuan) timely filed an allegation that the Department made three ministerial errors in calculating the final margin for Kaiyuan. On July 31, 2002, the respondents, China First Pencil Co., Ltd. (CFP), Orient International Holding Shanghai Foreign Trade Co., Ltd (OIHSFTC), Guangdong Stationery & Sporting Goods Import & Export Co., Ltd (Guangdong), and Three Star Stationery Industry Co., Ltd. (Three Star) timely filed an allegation that the Department made several ministerial errors in the final results. The Writing Instrument Manufacturers Association, Inc., Pencil Section; Sanford Corp.; Berol Corp.; General Pencil Co., Inc; J.R. Moon Pencil Co.; Tennessee Pencil Co.; and Musgrave Pencil Co., filed comments regarding the respondents' allegations of ministerial errors on August 5, 2002.

### Scope of The Investigation

Imports covered by this review are shipments of certain cased pencils of any shape or dimension which are writing and/or drawing instruments that feature cores of graphite or other materials, encased in wood and/or man-made materials, whether or not decorated and whether or not tipped (*e.g.*, with erasers, etc.) in any fashion, and either sharpened or unsharpened. The pencils subject to this order are classified under item number 9609.10.00 of the Harmonized Tariff Schedule of the United States (HTSUS). Specifically excluded from the scope of this order are mechanical pencils, cosmetic pencils, pens, non-cased crayons (wax), pastels, charcoals, and chalks.Although the HTSUS item number is provided for convenience and customs purposes our written description of the scope of the order is dispositive.

### Allegation of Ministerial Errors

In their July 30 and 31, 2002 submissions, respondents alleged that the Department: (1) Used an incorrect surrogate to value the wax used by Kaiyuan, (2) assigned Guangdong an incorrect dumping margin, (3) used an incorrect averaging methodology in calculating the average surrogate value for lacquer, paint and dipping lacquer (collectively lacquer), and (4) used an incorrect surrogate to value black and color cores.

Section 751(h) of the Act authorizes the Department to correct ministerial errors. In that vein, 19 CFR 351.224(e) notes that ''the Secretary will analyze any comments received and, if appropriate, correct any significant ministerial error by amending the preliminary determination, or correct any ministerial error by amending the final determination or the final results of review (whichever is applicable).'' A ministerial error is defined under 19 CFR 351.224(f) as ''an error in addition, subtraction, or other arithmetic function, clerical error resulting from inaccurate copying, duplication, or the like, and any other similar type of unintentional error which the Secretary considers ministerial.''

After reviewing respondents' allegations we have determined, in accordance with 19 CFR 351.224(e), that the *Final Results* were based on several ministerial errors. We agree with respondents that the Department used an incorrect averaging methodology in calculating the average surrogate value for lacquer. The Department also found that it used this same incorrect averaging methodology in calculating the average value for a number of other factors. *See* Memorandum from Holly A. Kuga to Bernard T. Carreau, regarding the ministerial error allegations with respect to the final results of the instant review, dated concurrently with this notice (Ministerial Errors Memorandum), a public version of which is on file in room B–099 of the main Commerce building.

The alleged ministerial errors with which we do not agree concern the respondents' assertion that the Department assigned Guangdong an incorrect dumping margin and used incorrect surrogates to value the wax used by Kaiyuan and the black and color cores. For a detailed description of all these allegations and, where applicable, our resultant corrections, *see* the Ministerial Errors Memorandum. Therefore, in accordance with 19 CFR 351.224(e), we are amending the final results of the antidumping duty administrative review of certain cased pencils from the People's Republic of China to reflect the correction of the ministerial errors outlined above. The revised weighted-average dumping margins are in the Amended Final Results section, below.

### Amended Final Results

We are amending the final results of the antidumping duty administrative review of certain cased pencils from the People's Republic of China as discussed above. The revised weighted-average dumping margins are as follows:

| Manufacturer/exporter | Margin (percent) |
|---|---|
| China First Pencil Co., Ltd. | 6.32[1] |
| Orient International Holding Shanghai Foreign Trade Co., Ltd. | 12.98 |
| Kaiyuan Group Corporation | 114.90 |
| Guangdong Stationery & Sporting Goods Import & Export Co., Ltd. | 114.90 |
| PRC-Wide Rate | 114.90 |

[1] Shanghai Three Star Stationery Company Ltd. is now considered to be part of China First Pencil Co., Ltd.

**Cash Deposit Requirements**

The following cash deposit requirements will be effective upon publication of this notice of amended final results of administrative review for all shipments of pencils from the PRC entered, or withdrawn from warehouse, for consumption on or after the date of publication, as provided by section 751(a)(1) of the Act: (1) The cash deposit rates for the reviewed companies will be the rates shown above; (2) for previously reviewed or investigated companies not listed above, that have separate rates, the cash deposit rate will continue to be the company-specific rate published for the most recent period; (3) the cash deposit rate for all other PRC exporters will be 114.90 percent; and 4) the cash deposit rate for non-PRC exporters will be the rate applicable to the PRC supplier of that exporter.

These deposit requirements shall remain in effect until publication of the final results of the next administrative review.

**Assessment**

The Department will determine, and the Customs Service will assess, antidumping duties on all entries of subject merchandise in accordance with these amended final results. For assessment purposes, we have calculated exporter-specific duty assessment rates for subject merchandise based on the ratio of the total amount of antidumping duties calculated for the examined sales during the period of review (POR) to the total quantity of sales examined during the POR. We calculated exporter-specific assessment rates because there was no information on the record which identified the importers of record. The Department will issue appropriate assessment instructions directly to the Customs Service within 15 days of publication of these final amended results of review.

This determination is issued and published in accordance with sections 751(a)(1) and 777(i) of the Act.

Dated: September 9, 2002.

**Richard W. Moreland,**

*Acting Assistant Secretary for Import Administration.*

[FR Doc. 02–23822 Filed 9–18–02; 8:45 am]

BILLING CODE 3510–DS–S

## DEPARTMENT OF COMMERCE

### International Trade Administration

**[A–791–815]**

### Notice of Amended Preliminary Determination of Sales at Less Than Fair Value; Ferrovanadium from the Republic of South Africa

**AGENCY:** Import Administration, International Trade Administration, Department of Commerce.

**ACTION:** Notice of Amended Preliminary Determination of Sales at Less Than Fair Value.

**EFFECTIVE DATE:** September 19, 2002.

**FOR FURTHER INFORMATION CONTACT:** Crystal Crittenden or Mark Manning at (202) 482–0989 or (202) 482–5253, respectively; AD/CVD Enforcement Office IV, Group II, Import Administration, Room 1870, International Trade Administration, U.S. Department of Commerce, 14th Street and Constitution Avenue, NW., Washington, DC 20230.

**SUPPLEMENTARY INFORMATION:**

**The Applicable Statute and Regulations**

Unless otherwise indicated, all citations to the statute are references to the provisions effective January 1, 1995, the effective date of the amendments made to the Tariff Act of 1930 (the Act) by the Uruguay Round Agreements Act (URAA). In addition, unless otherwise indicated, all citations to the Department of Commerce (the Department) regulations refer to the regulations codified at 19 CFR part 351 (April 2002).

**Background**

On June 25, 2002, the Department preliminarily determined that imports of ferrovanadium from the Republic of South Africa (South Africa) are being, or are likely to be, sold in the United States at less than fair value (LTFV), as provided in section 733 of the Act. *See Notice of Preliminary Determination of Sales at Less Than Fair Value and Postponement of Final Determination: Ferrovanadium from the Republic of South Africa*, 67 FR 45083 (July 8, 2002) (*Preliminary Determination*). On July 9, 2002, one of the respondents, Xstrata South Africa (Proprietary) Limited (Xstrata), timely filed an allegation that the Department made several ministerial errors in its preliminary determination. In addition, during July 2002, Xstrata and Highveld Steel and Vanadium Corporation, Ltd (Highveld), the other respondent in this investigation, separately submitted letters declining the Department's request to conduct verification.

**Scope of The Investigation**

The scope of this investigation covers all ferrovanadium regardless of grade, chemistry, form, shape, or size. Ferrovanadium is an alloy of iron and vanadium that is used chiefly as an additive in the manufacture of steel. The merchandise is commercially and scientifically identified as vanadium. It specifically excludes vanadium additives other than ferrovanadium, such as nitride vanadium, vanadium-aluminum master alloys, vanadium chemicals, vanadium oxides, vanadium waste and scrap, and vanadium-bearing raw materials such as slag, boiler residues and fly ash. Merchandise under the following Harmonized Tariff Schedule of the United States (HTSUS) item numbers 2850.00.2000, 8112.40.3000, and 8112.40.6000 are specifically excluded. Ferrovanadium is classified under HTSUS item number 7202.92.00. Although the HTSUS item number is provided for convenience and Customs purposes, the Department's written description of the scope of this investigation remains dispositive.

**Allegation of Ministerial Errors**

In its July 9, 2002 submission, Xstrata alleged that the Department (1) used the wrong currency exchange rates to convert expenses reported in foreign currencies in the U.S. sales file into U.S. dollars, (2) included the wrong selling expenses in constructed value (CV), (3) failed to deduct imputed credit expenses from CV, and (4) erred by not granting Xstrata a constructed export price (CEP) offset.

A ministerial error is defined under 19 CFR 351.224(f) as ''an error in addition, subtraction, or other arithmetic function, clerical error resulting from inaccurate copying, duplication, or the like, and any other similar type of unintentional error which the Secretary considers ministerial.'' In addition, 19 CFR 351.224(e) notes that ''the Secretary will analyze any comments received and, if appropriate, correct any significant ministerial error by amending the preliminary determination....'' Ministerial errors are considered to be ''significant'' if, in the aggregate, their correction would result in a change of at least five absolute percentage points in, but not less than 25 percent of, the weighted-average dumping margin calculated in the original (erroneous) preliminary determination; or would result in a difference between a weighted-average dumping margin of zero (or *de minimis*) and a weighted-

average dumping margin of greater than *de minimis* or vice versa (*see* 19 CFR 351.224(e)).

After reviewing Xstrata's allegations, we have determined, in accordance with 19 CFR 351.224(e), that the *Preliminary Determination* was based on several ministerial errors which are considered significant under the Department's regulations. First, we agree with Xstrata that the Department failed to merge the currency exchange rate database and the U.S. sales database by the date of sale. Because of this error, we used the wrong currency exchange rates to convert U.S. sales adjustments reported in foreign currencies into U.S. dollars. Second, we agree, in part, with Xstrata's allegation regarding the selling expenses included in CV. Specifically, we agree that we included certain movement expenses in CV, rather than selling expenses. *See* the Memorandum from Holly A. Kuga to Bernard T. Carreau regarding the ministerial error allegations with respect to our preliminary determination in the instant investigation, dated concurrently with this notice (Allegation of Ministerial Errors Memorandum), a public version of which is on file in room B–099 of the Department of Commerce Herbert C. Hoover building.

The alleged ministerial errors with which we do not agree concern Xstrata's assertion that the Department erred by including the wrong selling expenses in CV, failing to deduct imputed credit expenses from CV and not granting Xstrata a CEP offset. As stated in the Allegation of Ministerial Errors Memorandum, the Department determined that these allegations are not ministerial in nature, but rather involve methodological issues. *See* the Allegation of Ministerial Errors Memorandum for a detailed description of the ministerial error allegations and a detailed analysis thereof.

Therefore, in accordance with 19 CFR 351.224(e), we are amending the preliminary determination of the antidumping duty investigation of ferrovanadium from South Africa to reflect the correction of significant ministerial errors made in the margin calculation for Xstrata. Xstrata's revised weighted-average dumping margin is listed in the ''Amended Preliminary Determination'' section, below. We have also revised the all others rate to reflect the change in Xstrata's margin.

## Amended Preliminary Determination

We are amending the preliminary determination of the antidumping duty investigation of ferrovanadium from South Africa to reflect the correction of the above-cited ministerial errors. The revised preliminary weighted-average dumping margins are as follows:

| Manufacturer/exporter | Margin (percent) |
|---|---|
| Highveld Steel and Vanadium Corporation Ltd | 45.58 |
| Xstrata South Africa (Proprietary) Limited | 19.42 |
| All Others | 33.39 |

## Suspension of Liquidation

In accordance with section 733(d) of the Act, we are directing the United States Customs Service (Customs) to continue suspending liquidation on all imports of subject merchandise from South Africa. Customs shall require a cash deposit or the posting of a bond equal to the weighted-average amount by which normal value exceeds the export price as indicated in the chart above. These suspension-of-liquidation instructions will remain in effect until further notice.

## International Trade Commission Notification

In accordance with section 733(f) of the Act, we have notified the International Trade Commission of our amended preliminary determination.

## Public Comment

Since Highveld and Xstrata have declined verification, the Department has assigned the following schedule for the submission of case briefs for this investigation: case briefs must be submitted to the Department no later than seven days after the date of the publication of this notice. Rebuttal briefs must be filed five days from the deadline for case briefs. A list of authorities used, a table of contents, an electronic copy of the public version on diskette, and an executive summary of issues should accompany any briefs submitted to the Department. Executive summaries should be limited to five pages total, including footnotes.

The deadline for requesting a hearing has passed. The Department received no requests for a hearing, therefore, no hearing will be held in this investigation.

We will make our final determination no later than November 20, 2002.

This determination is issued and published in accordance with sections 733(f) and 777(i) of the Act.

Dated: September 12, 2002.

**Richard W. Moreland,**

*Acting Assistant Secretary for Import Administration.*

[FR Doc. 02–23821 Filed 9–18–02; 8:45 am]

BILLING CODE 3510–DS–S

## DEPARTMENT OF COMMERCE

## National Oceanic and Atmospheric Administration

**[I.D. 071002A]**

## Marine Mammals; Notice of Intent to Prepare an Environmental Impact Statement for a Take Reduction Plan for the Western North Atlantic Coastal Stock of Bottlenose Dolphins

**AGENCY:** National Marine Fisheries Service (NMFS), National Oceanic and Atmospheric Administration (NOAA), Commerce.

**ACTION:** Notice of intent to prepare an Environmental Impact Statement (EIS); reopening of comment period.

**SUMMARY:** NMFS announced its intention to prepare an EIS on July 22, 2002. The EIS, prepared in accordance with the National Environmental Policy Act, is for the development of a Bottlenose Dolphin Take Reduction Plan (BDTRP) to reduce the incidental mortality and serious injury of the Atlantic coastal stock of bottlenose dolphins in commercial fisheries to below the potential biological removal (PBR) level for the stock. The purpose of this action is to solicit public comments on the scope of the issues to be addressed in the EIS. The original comment period closed on August 21, 2002. However, in response to public comments and to ensure that the public has ample opportunity to provide comments, NMFS is reopening the pubic comment period for an additional 45 days.

**DATES:** Comments on the scope of the EIS must be postmarked or transmitted via facsimile by 5 p.m. Eastern Standard Time November 4, 2002.

**ADDRESSES:** Send comments on the scope of the EIS to Chief, Marine Mammal Conservation Division, Office of Protected Resources, National Marine Fisheries Service, 1315 East-West Highway, Silver Spring, MD 20910, Attn: Bottlenose Dolphin EIS. Comments may also be sent via facsimile to 301–713–0376. NMFS will not accept comments submitted via e-mail or Internet.

**FOR FURTHER INFORMATION CONTACT:** Katie Moore, NMFS Southeast Region, phone: 727–570–5312, e-mail: *Katie.Moore@noaa.gov*; or Emily Menashes, NMFS Office of Protected Resources, phone: 301–713–2322, e-mail: *Emily.Menashes@noaa.gov*. Individuals who use a telecommunications device for the deaf (TDD) may call the Federal Information Relay Service at 1–800–877–8339

between 8 a.m. and 4 p.m. Eastern time, Monday through Friday, excluding Federal holidays.

**SUPPLEMENTARY INFORMATION:** Electronic AccessFor additional information on Atlantic coastal bottlenose dolphins, refer to the draft 2002 Atlantic and Gulf of Mexico Marine Mammal Stock Assessment Reports (SARs). The reports can be accessed via the internet at: *http://www.nmfs.noaa.gov/prot__res/PR2/Stock__Assessment__Program/sars.html.*

## Background

NMFS intends to develop and implement a BDTRP pursuant to section 118(f) of the Marine Mammal Protection Act (MMPA). The purpose of the proposed action is to reduce the incidental mortality and serious injury of the Atlantic coastal stock of bottlenose dolphins in commercial fisheries to below the PBR level for the stock. The BDTRP will address mortality and serious injury of Atlantic coastal bottlenose dolphins incidentally taken in the following Category II commercial fisheries: Mid-Atlantic coastal gillnet; North Carolina inshore gillnet; Southeast Atlantic gillnet; Southeastern U.S. Atlantic shark gillnet; Atlantic blue crab trap/pot; Mid-Atlantic haul/beach seine; North Carolina long haul seine; North Carolina roe mullet stop net; and Virginia pound net.

Section 118(f) of the MMPA requires NMFS to convene a take reduction team to assist in the recovery and prevent the depletion of each strategic stock that interacts with Category I or II fisheries. The western North Atlantic coastal stock of bottlenose dolphins is a strategic stock. More information about the stock is available in the draft 2002 SAR, which can be obtained via the internet or by contacting Katie Moore or Emily Menashes (*see* **FOR FURTHER INFORMATION CONTACT**). Strategic status was initially assigned because the stock is designated as depleted under the MMPA as a result of a large-scale mortality event that occurred in 1987–1988 (58 FR 17789, April 6, 1993). However, the stock also qualifies as strategic because mortality and serious injury of this stock incidental to commercial fishing exceeds the PBR level of the stock.

The immediate goal of a take reduction plan for a strategic stock of marine mammals is to reduce, within 6 months of plan implementation, the incidental mortality or serious injury of marine mammals taken in the course of commercial fishing operations to levels less than the PBR level. The long-term goal of the plan is to reduce, within 5 years of its implementation, the incidental mortality or serious injury of marine mammals taken in the course of commercial fishing operations to insignificant levels approaching a zero mortality and serious injury rate, taking into account the economics of the fishery, the availability of existing technology, and existing state or regional fishery management plans.

The Secretary of Commerce (Secretary) may establish a take reduction team to address mortality or serious injury of strategic stocks of marine mammals interacting with Category I or II fisheries. Not later than 6 months after the date of establishment of a take reduction team, the team is required to submit a draft take reduction plan for such stock to the Secretary, consistent with the other provisions of section 118 of the MMPA. The Secretary is required to take the draft take reduction plan submitted by the team into consideration and publish in the **Federal Register** a summary of the draft plan submitted by the team, any changes proposed by the Secretary with an explanation of the reasons therefore, and proposed regulations to implement such plan, for public review and comment.

## Public Scoping Process

The Bottlenose Dolphin Take Reduction Team (Team) was established on November 7, 2001. A **Federal Register** notification announcing the convening of the Team and their first meeting was published on October 24, 2001 (66 FR 53782). The Team met a total of five times before delivering consensus recommendations for the BDTRP to NMFS on May 7, 2002. The dates of the five meetings were: November 7–8, 2001, January 23–25, 2002, February 27–March 1, 2002, March 27–28, 2002, and April 23–25, 2002. Team meetings were open to the public and a public comment period was held following each day of meetings. Additionally, NMFS held three public meetings with potential Team members and other interested members of the public on May 15–16, 2001, July 11–12, 2001, and November 6, 2001. An additional meeting of the Team, tentatively scheduled for January of 2003 and open to the public, will be held prior to development of the proposed rule implementing the BDTRP and completion of the draft EIS. This document provides additional opportunity for public involvement in the scope of the issues to be addressed in the EIS.

NMFS hired a commercial fisheries liaison to involve potentially affected sectors of the commercial fishing industry in the Team process by providing information about the purpose of the Team, meeting dates and locations, and discussion topics for upcoming meetings. The liaison used dockside visits, commercial fishing publications, and a commercial fishing expo to disseminate the information. NMFS generated and distributed a fact sheet about the Team and upcoming Team meetings and used mail and electronic mail to distribute information about meeting logistics and summaries to over 200 interested persons.

## Analysis of Alternatives

NMFS will be analyzing alternatives that are reasonably expected to reduce mortality and serious injury of Atlantic coastal bottlenose dolphins to less than the PBR level within 6 months of implementation of the BDTRP. NMFS will be analyzing all reasonable alternatives, which include a status quo alternative and the recommendations submitted by the Team. The Team's recommendations can be obtained by contacting Katie Moore or Emily Menashes (*see* **FOR FURTHER INFORMATION CONTACT**).

Dated: September 13, 2002.

**Chris Mobley,**

*Acting Director, Office of Protected Resources, National Marine Fisheries Service.*

[FR Doc. 02–23840 Filed 9–18–02; 8:45 am]

BILLING CODE 3510–22–S

# PATENT AND TRADEMARK OFFICE

## Proposed Information Collection; Payment of Patent and Trademark Office Fees by Credit Card

**ACTION:** Proposed collection; comment request.

**SUMMARY:** The United States Patent and Trademark Office (USPTO), as part of its continuing effort to reduce paperwork and respondent burden, invites the general public and other Federal agencies to take this opportunity to comment on the revision of a continuing information collection, as required by the Paperwork Reduction Act of 1995, Public Law 104–13 (44 U.S.C. 3506(c)(2)(A)).

**DATES:** Written comments must be submitted on or before November 18, 2002.

**ADDRESSES:** Direct all written comments to Susan K. Brown, Records Officer, Office of Data Architecture and Services, Data Administration Division, USPTO, Suite 310, 2231 Crystal Drive, Washington, DC 20231; by telephone at

(703) 308–7400; or by electronic mail at *susan.brown@uspto.gov.*

**FOR FURTHER INFORMATION CONTACT:** Requests for additional information should be directed to Michelle Picard, Director, Office of Finance, USPTO, Washington, DC 20231; by telephone at (703) 305–8360; or by electronic mail at *michelle.picard@uspto.gov.*

**SUPPLEMENTARY INFORMATION**

## I. Abstract

Under 35 U.S.C. 41 and 15 U.S.C. 1113, the USPTO charges fees for processing and other services related to patents, trademarks, and information products. The provisions of 35 U.S.C. 41 and 15 U.S.C. 1113 are implemented in 37 CFR 1.16–1.28, 1.492, 2.6, and 2.7.

This information collection was previously submitted in November 1999 in conjunction with a proposed rule that would allow customers to pay any patent or trademark fee by credit card. The Office of Management and Budget (OMB) approved this collection in January 2000. The USPTO published the final rule notice entitled ''Changes to Permit Payment of Patent and Trademark Fees by Credit Card'' in the **Federal Register** on May 24, 2000 (Vol. 65, No. 101). This rule amended the rules of practice under 37 CFR 1.23(b) to provide for the payment of any patent or trademark fee by credit card. Previously, credit card payments were limited to fees required for information products or for an electronic submission related to a trademark application.

Payments of fees made by credit card must specify the amount to be charged and other information that is necessary to process the charge, such as a billing address and an authorized signature. Persons submitting fee payments must also provide information concerning the purpose of the fee so that the USPTO is able to (1) apply the fee to the particular application, patent, trademark registration, or other proceeding, service, or product; and (2) determine whether the person has submitted the appropriate fee(s) required by law or regulation.

This information collection includes the Credit Card Payment Form (PTO–2038), which provides the public with a convenient way to submit a credit card payment for fees related to a patent, trademark, or information product. The USPTO is adding the Electronic Credit Card Payment Form to this collection. Customers may use this electronic form to submit credit card payments when using online systems provided by the USPTO for paying fees related to patents, trademarks, or information products. These systems are accessible through the USPTO Web site.

In order to protect the confidentiality of the credit card information, the USPTO will not include the Credit Card Payment Form or Electronic Credit Card Payment Form among the records open to public inspection for a patent, trademark registration, or other proceeding. The USPTO does not require customers to use the Credit Card Payment Form when paying fees by credit card, but using this form is strongly encouraged. If a customer provides credit card information on a form or document (*e.g.* in correspondence related to a patent or trademark) other than a credit card payment form provided by the USPTO, the credit card information may become part of a patent or trademark file that is open to public inspection. If credit card information is submitted on a form or document other than a credit card payment form provided by the USPTO, the USPTO will not be liable if the credit card information becomes public knowledge.

## II. Method of Collection

By mail, facsimile, or hand delivery to the USPTO. Payments using the Electronic Credit Card Payment Form may be submitted electronically over the Internet.

## III. Data

*OMB Number:* 0651–0043.

*Form Number(s):* PTO–2038.

*Type of Review:* Revision of a currently approved collection.

*Affected Public:* Individuals or households; businesses or other for-profits; not-for-profit institutions; farms; the Federal Government; and state, local or tribal governments.

*Estimated Number of Respondents:* 269,580 responses per year.

*Estimated Time Per Response:* The USPTO estimates that it will take the public approximately 12 minutes (0.2 hours) to gather the necessary information, prepare, and submit the Credit Card Payment Form or 10 minutes (0.17 hours) to prepare and submit the Electronic Credit Card Payment Form.

*Estimated Total Annual Respondent Burden Hours:* 48,154 hours per year.

*Estimated Total Annual Respondent Cost Burden:* $1,444,620 per year.

The USPTO expects that the information in this collection will be prepared by paraprofessionals or fee coordinators/administrators. Using the paraprofessional rate of $30 per hour, the USPTO estimates that the respondent cost burden for this collection will be $1,444,620 per year.

| Item | Estimated time for response (in minutes) | Estimated annual responses | Estimated annual burden hours |
|---|---|---|---|
| Credit Card Payment Form | 12 | 77,500 | 15,500 |
| Electronic Credit Card Payment Form | 10 | 192,080 | 32,654 |
| Total | | 269,580 | 48,154 |

*Estimated Total Annual Non-hour Respondent Cost Burden:* $7,194. There are no capital start-up or maintenance costs or filing fees associated with this information collection. However, customers may incur postage costs when submitting the Credit Card Payment Form to the USPTO by mail or recordkeeping costs related to the Electronic Credit Card Payment Form.

Customers generally send the Credit Card Payment Form to the USPTO along with other documents related to the fee or service being paid for by credit card, but some customers may submit just the Credit Card Payment Form without additional supporting documents. The USPTO estimates that roughly 5 percent of the Credit Card Payment Forms may be mailed in by themselves, for a total of 3,875 per year. The USPTO estimates that the first-class postage cost for a mailed Credit Card Payment Form will be 37 cents, for a total postage cost of $1,434 per year.

Customers using the Electronic Credit Card Payment Form may incur recordkeeping costs from printing a copy of the screen or electronic mail message confirming their successful transaction. Currently, a confirmation message may not be available for all transactions, but the USPTO is planning to implement an electronic confirmation receipt for all Internet transactions in

FY 2003 or FY 2004. The USPTO estimates that it will take 5 seconds (0.001 hours) to print a copy of the confirmation receipt and that approximately 192,080 submissions per year will use the Electronic Credit Card Payment Form, for a total recordkeeping burden of 192 hours per year. Using the paraprofessional rate of $30 per hour, the USPTO estimates that the recordkeeping cost associated with this collection will be $5,760 per year. The total non-hour respondent cost burden for this collection in the form of postage costs and recordkeeping costs is $7,194 per year.

**IV. Request for Comments**

Comments are invited on: (a) Whether the proposed collection of information is necessary for the proper performance of the functions of the agency, including whether the information shall have practical utility; (b) the accuracy of the agency's estimate of the burden (including hours and cost) of the proposed collection of information; (c) ways to enhance the quality, utility, and clarity of the information to be collected; and (d) ways to minimize the burden of the collection of information on respondents, *e.g.*, the use of automated collection techniques or other forms of information technology.

Comments submitted in response to this notice will be summarized or included in the request for OMB approval of this information collection; they also will become a matter of public record.

Dated: September 13, 2002.

**Susan K. Brown,**

*Records Officer, USPTO, Office of Data Architecture and Services, Data Administration Division.*

[FR Doc. 02–23763 Filed 9–18–02; 8:45 am]

BILLING CODE 3510–16–P

## PATENT AND TRADEMARK OFFICE

### Submission for OMB Review; Comment Request

The United States Patent and Trademark Office (USPTO) has submitted to the Office of Management and Budget (OMB) for clearance the following proposal for collection of information under the provisions of the Paperwork Reduction Act (44 U.S.C. Chapter 35).

*Agency:* United States Patent and Trademark Office (USPTO).

*Title:* Representative and Address Provisions.

*Form Number(s):* PTO/SB/81/82/83/121/122/123/124A/124B/125A/125B.

*Agency Approval Number:* 0651–0035.

*Type of Request:* Revision of a currently approved collection.

*Burden:* 31,259 hours annually.

*Number of Respondents:* 338,280 responses per year.

*Avg. Hours Per Response:* The USPTO estimates that it will take the public approximately 3 to 12 minutes (0.05 to 0.2 hours) to gather the necessary information, prepare the form, and submit a completed request involving a power of attorney, correspondence address, or Customer Number. The USPTO estimates that it will take the public approximately 1 hour and 45 minutes (1.75 hours) to submit a Customer Number Upload Spreadsheet, including the time for preparing the spreadsheet file on diskette, printing a copy of the spreadsheet, and producing a signed cover letter.

*Needs and Uses:* The public uses this collection to submit a request to grant or revoke power of attorney or authorization of agent in an application or patent, to withdraw as attorney or agent of record in an application or patent, and to designate or change the correspondence address for one or more applications or patents. The public also uses this collection to request a Customer Number and to designate or change the correspondence address or list of registered practitioners associated with a Customer Number. The USPTO uses the information collected from the public to determine who is authorized to take action in an application or patent on behalf of the applicant, patentee, or assignee, and to send correspondence related to the application or patent to the correct address.

*Affected Public:* Individuals or households, businesses or other for-profits, not-for-profit institutions, and the Federal Government.

*Frequency:* On occasion.

*Respondent's Obligation:* Required to obtain or retain benefits.

*OMB Desk Officer:* David Rostker, (202) 395–3897.

Copies of the above information collection proposal can be obtained by calling or writing Susan K. Brown, Records Officer, Office of Data Architecture and Services, Data Administration Division, USPTO, Suite 310, 2231 Crystal Drive, Washington, DC 20231, by phone at (703) 308–7400, or by e-mail at *susan.brown@uspto.gov.*

Written comments and recommendations for the proposed information collection should be sent on or before October 21, 2002, to David Rostker, OMB Desk Officer, Room 10202, New Executive Office Building, 725 17th Street NW., Washington, DC 20503.

Dated: September 13, 2002.

**Susan K. Brown,**

*Records Officer, USPTO, Office of Data Architecture and Services, Data Administration Division.*

[FR Doc. 02–23764 Filed 9–18–02; 8:45 am]

BILLING CODE 3510–16–P

## DEPARTMENT OF DEFENSE

### Department of the Air Force

### HQ USAF Scientific Advisory Board

**AGENCY:** Department of the Air Force, DoD.

**ACTION:** Notice of meeting.

**SUMMARY:** Pursuant to Public Law 92–463, notice is hereby given of the forthcoming meeting of the Secretary's Advisory Group. The purpose of the meeting is to allow the SAB and study leadership to provide advice to the Secretary on short and long-term policy and strategy issues for the Air Force. Because classified and contractor-proprietary information will be discussed, this meeting will be closed to the public.

**DATES:** September 26, 2002.

**ADDRESSES:** Room 4E869, The Pentagon.

**FOR FURTHER INFORMATION CONTACT:** Major John Pernot, Air Force Scientific Advisory Board Secretariat, 1180 Air Force Pentagon, Rm 5D982, Washington DC 20330–1180, (703) 697–4811.

**Pamela D. Fitzgerald,**

*Air Force Federal Register Liaison Officer.*

[FR Doc. 02–23792 Filed 9–18–02; 8:45 am]

BILLING CODE 5001–05–P

## DEPARTMENT OF DEFENSE

### Department of the Army

### Notice of Availability of the Record of Decision (ROD) for the Final Environmental Impact Statement (FEIS) for Enhanced Training and Operations at the National Guard Training Center—Fort Indiantown Gap, PA

**AGENCY:** National Guard Bureau; Department of the Army, DoD.

**ACTION:** Notice of availability.

**SUMMARY:** The National Guard Bureau announces the availability of the ROD, which explains the decision to proceed with 11 construction and enhancement actions at the National Guard Training Center at Fort Indiantown Gap. Three of

the 11 actions are large-scale projects: Construction of a Multi-Purpose Training Range; Expansion of a Tactical Vehicle Training Complex and Improvement to the Muir Army Airfield Complex, including a lengthened runway. The remaining eight actions are smaller actions that will result in few adverse impacts to resources. The Enhanced Training and Operations at the National Guard Training Center at Fort Indiantown Gap FEIS complies with all applicable requirements and adequately addresses the biological, physical, socio-economic, and cultural impacts from implementing the proposed action.

**ADDRESSES:** A copy of the ROD may be obtained by writing to Captain Geoffrey Lincoln, NGTC–FTIG EIS Project Officer, NGTC–FTIG, Environmental Section, 1119 Utility Road, Annville, Pennsylvania 17003–5002 or Lieutenant Colonel Christopher Cleaver, NGTC–FTIG Public Affairs Officer (PAO), PADMVA Headquarters, Building 0–47, Annville, Pennsylvania 17003–5002.

**FOR FURTHER INFORMATION CONTACT:** Captain Lincoln at (717) 861–5248 or Lieutenant Colonel Cleaver at (717) 861–8468.

**SUPPLEMENTARY INFORMATION:** The FEIS evaluated in-depth the potential impacts of three alternatives: (1) Preferred Project Alternative: implement all 11 proposed actions, including 42 component projects; (2) Competing Build Alternative: implement modified versions of the three large-scale actions and elements of the other eight actions; and (3) No Action Alternative: do not implement any of the 11 proposed actions. The FEIS concluded that the Preferred Project Alternative would result in the least impacts to the environment while meeting the stated purpose of and need for the proposed actions. The construction and enhancement actions are necessary to upgrade the site's capabilities over the next several years to meet current and future missions and needs of the Pennsylvania National Guard and other military users. The FEIS identifies mitigation measures to minimize impacts from the actions. Unmitigable impacts are expected to occur to local topography, forest resources and to four-acre Shuey Lake, located on the installation. Impacts to special status species, including the Regal Fritillary Butterfly and other resource areas, could be mitigated to less-than-significant levels.

Dated: September 10, 2002.

**Raymond J. Fatz,**

*Deputy Assistant Secretary of the Army (Environment, Safety and Occupational Health), OASA (I&E).*

[FR Doc. 02–23797 Filed 9–18–02; 8:45 am]

BILLING CODE 3710–08–M

## DEPARTMENT OF EDUCATION

### Notice of Proposed Information Collection Requests

**AGENCY:** Department of Education.

**ACTION:** Notice.

**SUMMARY:** The Acting Leader, Regulatory Information Management Group, Office of the Chief Information Officer, invites comments on the proposed information collection requests as required by the Paperwork Reduction Act of 1995.

**DATES:** Interested persons are invited to submit comments on or before November 18, 2002.

**SUPPLEMENTARY INFORMATION:** Section 3506 of the Paperwork Reduction Act of 1995 (44 U.S.C. Chapter 35) requires that the Office of Management and Budget (OMB) provide interested Federal agencies and the public an early opportunity to comment on information collection requests. OMB may amend or waive the requirement for public consultation to the extent that public participation in the approval process would defeat the purpose of the information collection, violate State or Federal law, or substantially interfere with any agency's ability to perform its statutory obligations. The Acting Leader, Regulatory Information Management Group, Office of the Chief Information Officer, publishes that notice containing proposed information collection requests prior to submission of these requests to OMB. Each proposed information collection, grouped by office, contains the following: (1) Type of review requested, *e.g.* new, revision, extension, existing or reinstatement; (2) Title; (3) Summary of the collection; (4) Description of the need for, and proposed use of, the information; (5) Respondents and frequency of collection; and (6) Reporting and/or Recordkeeping burden. OMB invites public comment. The Department of Education is especially interested in public comment addressing the following issues: (1) Is this collection necessary to the proper functions of the Department; (2) will this information be processed and used in a timely manner; (3) is the estimate of burden accurate; (4) how might the Department enhance the quality, utility, and clarity of the information to be collected; and (5) how might the Department minimize the burden of this collection on the respondents, including through the use of information technology.

Dated: September 13, 2002.

**Joseph Schubart,**

*Acting Leader, Regulatory Information Management Group, Office of the Chief Information Officer.*

### Office of Special Education and Rehabilitative Services

*Type of Review:* Reinstatement.

*Title:* State Eligibility Plan Under Part B of the Individuals with Disabilities Education Act.

*Frequency:* Annually.

*Affected Public:* State, Local, or Tribal Gov't, SEAs or LEAs.

*Reporting and Recordkeeping Hour Burden:*

Responses: 57.

Burden Hours: 570.

*Abstract:* State educational agencies were required to submit State Plans to the U.S. Department of Education in order to receive funds under Part B of the Individuals with Disabilities Education Act (IDEA). Each State now has a State Plan on file with the Department. Any policies and procedures that are currently on file that are consistent with the 1997 amendments to IDEA remain in effect, unless the Secretary or the State determine the need for a change.

Requests for copies of the proposed information collection request may be accessed from *http://edicsweb.ed.gov,* by selecting the ''Browse Pending Collections'' link and by clicking on link number 2156. When you access the information collection, click on ''Download Attachments '' to view. Written requests for information should be addressed to Vivian Reese, Department of Education, 400 Maryland Avenue, SW., Room 4050, Regional Office Building 3, Washington, DC 20202–4651 or to the e-mail address *vivian_reese@ed.gov.* Requests may also be electronically mailed to the e-mail address *OCIO_RIMG@ed.gov* or faxed to 202–708–9346. Please specify the complete title of the information collection when making your request.

Comments regarding burden and/or the collection activity requirements should be directed to Sheila Carey at her e-mail address *Sheila.Carey@ed.gov.* Individuals who use a telecommunications device for the deaf (TDD) may call the Federal Information

Relay Service (FIRS) at 1–800–877–8339.

[FR Doc. 02–23779 Filed 9–18–02; 8:45 am]

BILLING CODE 4000–01–P

## DEPARTMENT OF EDUCATION

### Privacy Act of 1974; Computer Matching Program

**AGENCY:** Department of Education.

**ACTION:** Notice—computer matching between the Department of Education and the Immigration and Naturalization Service, Department of Justice.

**SUMMARY:** Pursuant to the Computer Matching and Privacy Protection Act of 1988, Pub. L. 100–503, and the Office of Management and Budget (OMB) Guidelines on the Conduct of Matching Programs, a notice is hereby given of the computer matching program between the Department of Education (ED) (the recipient agency), and the Immigration and Naturalization Service (INS), Department of Justice (the source agency).

In accordance with the Privacy Act of 1974 (5 U.S.C. 522a), as amended by the Computer Matching and Privacy Protection Act of 1989, and OMB Circular A–130, the following information is provided:

*1. Names of Participating Agencies*

The U.S. Department of Education and the U.S. Department of Justice.

*2. Purpose of the Match*

The matching program entitled ''Systematic Alien Verification for Entitlement (SAVE) INS/ED'' will permit ED to confirm the immigration status of alien applicants for, or recipients of, assistance as authorized by Title IV, section 484(a)(5), of the Higher Education Act of 1965, as amended (HEA); 20 U.S.C. 1091(a)(5). The Title IV programs include: the Federal Pell Grant Program, the Federal Perkins Loan Program; the Federal Work-Study Program; the Federal Supplemental Educational Opportunity Grant Program; the Federal Family Education Loan Program; the William D. Ford Federal Direct Loan Program; the Leveraging Educational Assistance Partnership Program; and Gaining Early Awareness and Readiness for Undergraduate Programs.

*3. Authority for Conducting the Matching Program*

The information contained in the INS data base is referred to as the Alien Status Verification Index (ASVI), and is authorized under the Immigration Reform and Control Act of 1986 (IRCA), Pub. L. 99–603. ED seeks access to this database under the Higher Education Act of 1965, as amended (section 484(g)); 20 U.S.C. 1091(g). The INS is authorized to confirm immigration status under the authority of section 103 of the Immigration and Nationality Act, as amended.

*4. Categories of Records and Individuals Covered*

The records to be used in the match and the roles of the matching participants are described as follows:

Through the use of user identification codes and passwords, authorized persons from ED will transmit electronically data from its Privacy Act system of records entitled, ''Federal Student Aid Application File (18–11–01)'' to INS. The data will include the alien registration number and date of birth of the alien applicant for, or recipient of, Title IV assistance. This action will initiate a search for corresponding data elements in an INS Privacy Act system of records entitled ''Alien Status Verification Index (JUSTICE/INS–009).'' Where there is a match of records, the system will provide to ED the immigration status code of the alien applicant or recipient. In accordance with 5 U.S.C. 552a(p), ED will not suspend, terminate, reduce, or make a final denial of any Title IV assistance to such individual, or take other adverse action against such individual, as a result of information produced by such a match, until (1)(a) ED has independently verified the information; or (b) the Data Integrity Board of ED determines in accordance with guidance issued by the Director of the Office of Management and Budget that (i) the information is limited to identification and amount of benefits paid by INS under a Federal benefit program; and (ii) there is a high degree of confidence that the information provided to ED is accurate; (2) the individual receives a notice from ED containing a statement of its findings and informing the individual of the opportunity to contest such findings by submitting documentation demonstrating a satisfactory immigration status within 30 days of receipt of the notice; and (3) 30 days from the date of the individual's receipt of such notice has expired.

*5. Effective Dates of the Matching Program*

The matching program will become effective 40 days after a copy of the agreement, as approved by the Data Integrity Board of each agency, is sent to Congress and OMB, unless OMB objects to some or all of the agreement, or 30 days after publication of this notice in the **Federal Register**, whichever date is later. The matching program will continue for 18 months after the effective date and may be extended for an additional 12 months thereafter, if the conditions specified in 5 U.S.C. 552a(o)(2)(D) have been met.

*6. Address for Receipt of Public Comments or Inquires*

Ms. Edith Bell, Management and Program Analyst, U.S. Department of Education, Federal Student Aid, Union Center Plaza, 830 First Street NE., Washington, DC 20002–5345. Telephone: (202) 377–3231. If you use a telecommunications device for the deaf (TDD), you may call the Federal Information Relay Service (FIRS) at 1–800–877–8339.

Individuals with disabilities may obtain this document in an alternative format (*e.g.*, Braille, large print, audiotape or computer diskette) on request to the contact person listed in the preceding paragraph.

**Electronic Access to This Document**

You may view this document, as well as all other Department of Education of documents published in the **Federal Register**, in text or Adobe Portable Document Format (PDF) on the Internet at the following site: *www.ed.gov/legislation/FedRegister.*

To use PDF you must have Adobe Acrobat Reader, which is available free at this site. If you have questions about using PDF, call the U.S.

Government Printing Office (GPO), toll free, at 1–888–293–6498; or in the Washington, DC, area at (202) 512–1530.

**Note:** The official version of this document is the document published in the **Federal Register**. Free Internet access to the official edition of the **Federal Register** and the Code of Federal Regulations is available on GPO access at: *http://www.access.gpo.gov/nara.index.html.*

**Program Authority:** 20 U.S.C. 1091(a)(5).

Dated: September 13, 2002.

**James Manning,**

*Acting Chief Operating Officer, Federal Student Aid.*

[FR Doc. 02–23798 Filed 9–18–02; 8:45 am]

BILLING CODE 4000–01–P

## DEPARTMENT OF ENERGY

### Office of Fossil Energy

**[FE Docket Nos. 02–55–NG, 02–54–LNG, 01–44–LNG, 01–83–NG, 02–56–NG, and 02–58–NG]**

### Multifuels, L.P., Applied LNG Technologies USA, L.L.C., Itochu Petroleum Japan Ltd., (Formerly ITOCHU International Inc.), Puget Sound Energy, Inc., Regent Resources Ltd., Concord Energy LLC; Orders Granting and Amending Authority To Import and Export Natural Gas, Including Liquefied Natural Gas

**AGENCY:** Office of Fossil Energy, DOE.

**ACTION:** Notice of orders.

**SUMMARY:** The Office of Fossil Energy (FE) of the Department of Energy gives notice that during August 2002, it issued Orders granting and amending authority to import and export natural gas, including liquefied natural gas. These Orders are summarized in the attached appendix and may be found on the FE Web site at *http://www.fe.doe.gov* (select gas regulation), or on the electronic bulletin board at (202) 586–7853. They are also available for inspection and copying in the Office of Natural Gas & Petroleum Import & Export Activities, Docket Room 3E–033, Forrestal Building, 1000 Independence Avenue, SW., Washington, DC 20585, (202) 586–9478. The Docket Room is open between the hours of 8 a.m. and 4:30 p.m., Monday through Friday, except Federal holidays.

Issued in Washington, DC, on September 10, 2002.

**Clifford P. Tomaszewski,**

*Manager, Natural Gas Regulation, Office of Natural Gas & Petroleum Import & Export Activities, Office of Fossil Energy.*

APPENDIX—ORDERS GRANTING AND AMENDING IMPORT/EXPORT AUTHORIZATIONS

| Order No. | Date issued | Importer/exporter FE docket no. | Import volume | Export volume | Comments |
|---|---|---|---|---|---|
| 1802 | 8–9–02 | Multifuels, L.P., 02–55–NG. | 5 Bcf | | Import and export natural gas from and to Canada, beginning on September 1, 2002, and extending through August 31, 2004. |
| 1803 | 8–13–02 | Applied LNG Technologies USA, L.L.C., 02–54–LNG. | | 5.44 Bcf | Export LNG to Mexico, beginning on August 19, 2002, and extending through August 18, 2004. |
| 1705–A | 8–19–02 | ITOCHU Petroleum Japan Ltd. (Formerly ITOCHU International Inc.), 01–44–LNG. | | | Name change on blanket import authority |
| 1746–A | 8–21–02 | Puget Sound Energy, Inc., 01–83–NG. | 75 Bcf | | Amendment to blanket import authority to Canada, to include exports to Canada, and to increase the volumes of natural gas from 50 Bcf (imports only) to a combined total of 75 Bcf. |
| 1804 | 8–30–02 | Regent Resources Ltd., 02–56–NG. | 15 Bcf | | Import natural gas from Canada, beginning on October 1, 2002, and extending through September 30, 2004. |
| 1805 | 8–30–02 | Concord Energy LLC, 02–58–NG. | 100 Bcf | | Import and export a combined total of natural gas from and to Canada, beginning on September 1, 2002, and extending through August 31, 2004. |

[FR Doc. 02–23795 Filed 9–18–02; 8:45 am]

BILLING CODE 6450–01–P

## DEPARTMENT OF ENERGY

### Federal Energy Regulatory Commission

**[Docket No. ER99–14350–003, et al.]**

### Avista Corporation, et al.; Electric Rate and Corporate Regulation Filings

September 12, 2002.

The following filings have been made with the Commission. The filings are listed in ascending order within each docket classification.

**1. Avista Corporation, Spokane Energy, LLC, Avista Turbine Power, Inc.**

[Docket Nos. ER99–1435–003, ER98–4336–007, and ER00–1814–001]

Take notice that on September 9, 2002, Avista Corporation, Spokane Energy, LLC, and Avista Turbine Power, Inc., filed with the Federal Energy Regulatory Commission (Commission) their three-year updated market analysis. Avista Corporation is a load-serving public utility with its headquarters in Spokane, Washington, and Spokane Energy and Avista Turbine Power are indirect, wholly-owned subsidiaries of Avista Corporation.

Copies of this filing have been served upon parties on the Commission's official service lists for these dockets.

*Comment Date:* September 30, 2002.

**2. South Point Energy Center, LLC**

[Docket No. ER02–2177–001]

Take notice that on September 6, 2002, South Point Energy Center, LLC filed a service agreement in compliance with the Commission order dated August 22, 2002 in the referenced docket.

*Comment Date:* September 27, 2002.

**3. Public Service Company of New Mexico**

[Docket No. ER02–2544–000]

Take notice that on September 9, 2002, Public Service Company of New Mexico (PNM) submitted for filing on its own behalf, an executed interconnection agreement, dated June 7, 2002, between PNM as a participant in the Four Corners Power Plant Project, located in the northwest corner of New Mexico (other Four Corners Power Plant

Project participants include Arizona Public Service Company, El Paso Electric Company, Salt River Project Agricultural Improvement and Power District, Southern California Edison Company, and Tucson Electric Company), and three new interconnection participants: Tri-State Generation and Transmission Association, Inc., Public Service Company of Colorado, and Western Area Power Administration, under the terms of PNM's Open Access Transmission Tariff. The interconnection agreement sets forth the rates, terms and conditions for installation of interconnection facilities at the Four Corners Power Plant Project 345kV Switchyard to accommodate the interconnection of the upgraded (from 230kV to 345kV) Shiprock, New Mexico to Four Corners 345kV Transmission Line (Shiprock—Four Corners Line). The three interconnection participants possess transmission rights on the Shiprock—Four Corners Line. PNM requests an effective date of June 7, 2002 for the interconnection agreement, the date of the last signatory to execute the interconnection agreement. PNM's filing is available for public inspection at its offices in Albuquerque, New Mexico.

Copies of the filing have been sent to all parties to the interconnection agreement, to the New Mexico Public Regulation Commission and the New Mexico Attorney General.

*Comment Date:* September 30, 2002.

**4. Trigen-Cholla LLC**

[Docket No. ER02–2545–000]

Take notice that on September 9, 2002, Trigen-Cholla LLC tendered for filing a Notice of Cancellation of Rate Schedule respecting Trigen-Cholla LLC's FERC Electric Tariff, Original Volume No. 1 (the Rate Schedule), which became effective August 1, 2000, in Docket No. ER00–3263–000. Trigen-Cholla LLC has given notice of the termination by their terms of Original Service Agreements No. 1 and No. 2 under the Rate Schedule, between Trigen-Cholla LLC and Tri-State Generation and Transmission Association, Inc.

Trigen-Cholla requests that the cancellation become effective November 8, 2002.

*Comment Date:* September 30, 2002.

**5. Westar Energy, Inc.**

[Docket No. ES02–51–000]

Take notice that on September 6, 2002, Westar Energy, Inc. (Westar) submitted an application pursuant to section 204 of the Federal Power Act seeking authorization to issue long-term debt securities, on or before October 31, 2004, in an amount not to exceed $650 million at any one time.

Westar also requests a waiver from the Commission's competitive bidding and negotiated placement requirements at 18 CFR 34.2.

*Comment Date:* October 3, 2002.

**Standard Paragraph**

E. Any person desiring to intervene or to protest this filing should file with the Federal Energy Regulatory Commission, 888 First Street, NE, Washington, DC 20426, in accordance with Rules 211 and 214 of the Commission's Rules of Practice and Procedure (18 CFR 385.211 and 385.214). Protests will be considered by the Commission in determining the appropriate action to be taken, but will not serve to make protestants parties to the proceeding. Any person wishing to become a party must file a motion to intervene. All such motions or protests should be filed on or before the comment date, and, to the extent applicable, must be served on the applicant and on any other person designated on the official service list. This filing is available for review at the Commission or may be viewed on the Commission's Web site at *http://www.ferc.gov* using the ''RIMS'' link, select ''Docket #'' and follow the instructions (call 202–208–2222 for assistance). Protests and interventions may be filed electronically via the Internet in lieu of paper; see 18 CFR 385.2001(a)(1)(iii) and the instructions on the Commission's Web site under the ''e-Filing'' link.

**Magalie R. Salas,**

*Secretary.*

[FR Doc. 02–23774 Filed 9–18–02; 8:45 am]

BILLING CODE 6717–01–P

## ENVIRONMENTAL PROTECTION AGENCY

**[FRL–7380–1]**

## Gulf of Mexico Program Management Committee Meeting

**AGENCY:** Environmental Protection Agency ( EPA).

**ACTION:** Notice of meeting.

**SUMMARY:** Under the Federal Advisory Committee Act (Public Law 92–463), EPA gives notice of a meeting of the Gulf of Mexico Program (GMP) Management Committee (MC).

**DATES:** The meeting will be held on Tuesday, October 8, 2002, from 1 p.m. to 5 p.m., and on Wednesday, October 9, 2002, from 8 a.m. to 12 p.m.

**ADDRESSES:** The meeting will be held at the Doubletree Hotel, 300 Canal Street, New Orleans, Louisiana. (1–888–874–9074).

**FOR FURTHER INFORMATION CONTACT:** Gloria D. Car, Designated Federal Officer, Gulf of Mexico Program Office, Mail Code EPA/GMPO, Stennis Space Center, MS 39529–6000 at (228) 688–2421.

**SUPPLEMENTARY INFORMATION:** Proposed agenda is attached.

The meeting is open to the public.

Dated: September 11, 2002.

**Gloria D. Car,**

*Designated Federal Officer.*

**Gulf of Mexico Program**

**Management Committee Meeting, October 8–9, 2002, Doubletree Hotel, 16th Floor—International Ballroom, New Orleans, Louisiana**

*Agenda*

*Tuesday, October 8*

1:00 Welcome and Introductions (Bruce Moulton/Jane Watson)
1:10 State Executive Session Report Out (Bruce Moulton)
Purpose: Provide update on State discussions.
Decision: Informational.
1:30 Executive Order (Bryon Griffith)
Purpose: Review and discussion of final draft. Discuss next steps.
Decision: Endorsement of recommendations and consensus to forward to Policy Review Board for finalization. Agreement on next steps.
2:30 Alabama Pilot Mini-Strategic Assessment Presentation (John Carlton)
Purpose: Review and evaluation of Mini-Strategic Assessment Process as a follow-up to Ad Hoc Committee Recommendations
Decision: Endorsement of Process.
3:15 Break
3:30 Mercury Project Team Workplan (Fred Kopfler)
Purpose: Review draft workplan
Decision: Endorsement of workplan and consensus to proceed with Team Charge.
4:00 Project Team Charge for Nutrient Pilot Study (Larinda Tervelt)
Purpose: Project Team Identification
Decision: Endorsement of Charge and Team
4:30 Gulf Hypoxia: Lower Mississippi River Sub-basin Committee Development (Larinda Tervelt)
Purpose: Review status of Committee formation and next steps.
Decision: Informational.
5:00 Adjourn for Social—Dinner on your own.

*Wednesday, October 9*

7:30–8:00 Continental Breakfast
8:00 Federal Executive Session Report Out (Bryon Griffith)
Purpose: Provide update on Federal agency discussions.
Decision: Informational

8:30 Ad Hoc Recommendation on Focus Teams (Bryon Griffith)
Purpose: Review presentation at June Comprehensive Meeting and final concept of transitioning Focus Teams to Project Teams
Decision: Endorsement of GMPO Recommendation
9:00 FY2004 Workplan Development Status (Gloria Car)
Purpose: Provide update.
Decision: Informational.
9:30 Coastal America Report (Bob Bosenberg)
Purpose: Report on Coastal America activities and projects
Decision: Informational
10:00 Break
10:15 CAC Report (Robert Crowe/Casi Calloway)
Purpose: Report on CAC activities and key projects.
Decision: Informational.
10:45 Follow-up: Critical Scientific Research Needs Assessment
Purpose: Final Document to be published
Decision: Informational
10:50 Emerging Opportunities/Issues—Director's Report (Bryon Griffith)
Purpose: Review Program Activities
Decision: Informational
11:15 Management Committee Roundrobin
Purpose: Member Highlights
Decision: Informational
11:45 Review Action Items; Set next meeting date
12:00 Adjourn

[FR Doc. 02–23806 Filed 9–18–02; 8:45 am]

BILLING CODE 6560–50–P

## ENVIRONMENTAL PROTECTION AGENCY

**[FRL–7380–3]**

### The Metal Finishing Facility Risk Screening Tool (MFFRST): Technical Documentation and User's Guide

**AGENCY:** Environmental Protection Agency.

**ACTION:** Notice of availability of final document and CD–ROM.

**SUMMARY:** The U.S. Environmental Protection Agency (EPA) announces the availability of a final document, *The Metal Finishing Facility Risk Screening Tool (MFFRST): Technical Documentation and User's Guide* (EPA/600/R–01/057, July 2001) and a CD–ROM of the same title (EPA/600/C–01/057), prepared by the National Center for Environmental Assessment-Washington (NCEA-Washington), within the Office of Research and Development of the EPA. The CD–ROM includes an electronic version of the technical document and user's guide, as well as the pc-based software product titled, MFFRST. The pc-based software tool allows an individual to evaluate the potential exposures and health risks to workers and nearby residents from emissions from individual metal finishing facilities, using commonly available EPA procedures. Emissions into the air (from stacks to the outdoor environment and fugitive emissions from indoor sources) from routine operations are the only emissions considered in MFFRST. Further research efforts have been initiated to evaluate other waste streams—including wastewater and sludge.

**ADDRESSES:** This pc-based software tool and the accompanying technical support document and User's Guide are being made available electronically from the NCEA Web site at *http://www.epa.gov/ncea/mffrst.htm.* A limited number of the CD–ROMs will be available from EPA's National Service Center for Environmental Publications (NSCEP) in Cincinnati, Ohio (telephone: 1–800–490–9198 or 513–489–8190; facsimile 513–489–8695; or via the internet at *http://www.epa.gov/NCEPIhome/orderpub.html).* Please provide the title and EPA number when ordering from NSCEP.

**FOR FURTHER INFORMATION CONTACT:** For further information, please contact Matthew Lorber (202–564–3243); mailing address: NCEA–W (8623D), U.S. Environmental Protection Agency, Washington, DC 20460; facsimile: 202–565–0079; e-mail *lorber.matthew@epa.gov.*

Dated: September 9, 2002.

**Art Payne,**

*Acting Director, National Center for Environmental Assessment.*

[FR Doc. 02–23807 Filed 9–18–02; 8:45 am]

BILLING CODE 6560–50–P

## FEDERAL ELECTION COMMISSION

### Sunshine Act Notices

**AGENCY:** Federal Election Commission.

**PREVIOUSLY ANNOUNCED DATE AND TIME:** Tuesday, September 17, 2002, meeting closed to the public. This meeting was cancelled.

**PREVIOUSLY ANNOUNCED DATE AND TIME:** Thursday, September 19, 2002, meeting open to the public. This meeting was cancelled. The Final Audit Report on Quayle 2000, Inc. and Quayle 2000 Compliance Committee has been withdrawn.

**DATE AND TIME:** Tuesday, September 24, 2002 at 10 a.m.

**PLACE:** 999 E Street, NW., Washington, DC.

**STATUS:** This meeting will be closed to the public.

**ITEMS TO BE DISCUSSED:**

Compliance matters pursuant to 2 U.S.C. 437g.

Audits conducted pursuant to 2 U.S.C. 437g, 438(b), and Title 26, U.S.C.

Matters concerning participation in civil actions or proceedings or arbitration.

Internal personnel rules and procedures or matters affecting a particular employee.

**DATE AND TIME:** Thursday, September 26, 2002 at 10 a.m.

**PLACE:** 999 E Street, NW., Washington, DC (Ninth Floor).

**STATUS:** This meeting will be open to the public.

**ITEMS TO BE DISCUSSED:**

Correction and Approval of Minutes.

Final Audit Report—Reform Party 2000 Convention Committee.

Final Rules on Electioneering Communications.

Routine Administrative Matters.

**FOR MORE INFORMATION CONTACT:** Mr. Ron Harris, Press Officer, Telephone: (202) 694–1220.

**Mary W. Dove,**

*Secretary of the Commission.*

[FR Doc. 02–23939 Filed 9–17–02; 11:41 am]

BILLING CODE 6715–01–M

## FEDERAL RESERVE SYSTEM

### Change in Bank Control Notices; Acquisition of Shares of Bank or Bank Holding Companies

The notificants listed below have applied under the Change in Bank Control Act (12 U.S.C. 1817(j)) and § 225.41 of the Board's Regulation Y (12 CFR 225.41) to acquire a bank or bankholding company. The factors that are considered in acting on the notices are set forth in paragraph 7 of the Act (12 U.S.C. 1817(j)(7)).

The notices are available for immediate inspection at the Federal Reserve Bank indicated. The notices also will be available for inspection at the office of the Board of Governors. Interested persons may express their views in writing to the Reserve Bank indicated for that notice or to the offices of the Board of Governors. Comments must be received not later than October 3, 2002.

**A. Federal Reserve Bank of Chicago** (Phillip Jackson, Applications Officer) 230 South LaSalle Street, Chicago, Illinois 60690–1414:

*1. Mark B. Richardson,* Thetford Center, Vermont and Kimberly A. Richardson, Atlanta, Georgia; to acquire voting shares of Wellington Bancorp,

Inc., Springfield, Illinois, and thereby indirectly acquire Community Bank, Hoopeston, Illinois.

**B. Federal Reserve Bank of Kansas City** (Susan Zubradt, Assistant Vice President) 925 Grand Avenue, Kansas City, Missouri 64198–0001:

*1. Rinda Kay Harper, individually and as trustee of The Kay Harper Revocable Living Trust,* Edmond, Oklahoma; to acquire voting shares of First Jones Bancorporation, Inc., Jones, Oklahoma, and thereby indirectly acquire First State Bank, Jones, Oklahoma.

Board of Governors of the Federal Reserve System, September 13, 2002.

**Robert deV. Frierson,**

*Deputy Secretary of the Board.*

[FR Doc. 02–23789 Filed 9–18–02; 8:45 am]

BILLING CODE 6210–01–S

## FEDERAL RESERVE SYSTEM

### Formations of, Acquisitions by, and Mergers of Bank Holding Companies

The companies listed in this notice have applied to the Board for approval, pursuant to the Bank Holding Company Act of 1956 (12 U.S.C. 1841 *et seq.*) (BHC Act), Regulation Y (12 CFR Part 225), and all other applicable statutes and regulations to become a bank holding company and/or to acquire the assets or the ownership of, control of, or the power to vote shares of a bank or bank holding company and all of the banks and nonbanking companies owned by the bank holding company, including the companies listed below.

The applications listed below, as well as other related filings required by the Board, are available for immediate inspection at the Federal Reserve Bank indicated. The application also will be available for inspection at the offices of the Board of Governors. Interested persons may express their views in writing on the standards enumerated in the BHC Act (12 U.S.C. 1842(c)). If the proposal also involves the acquisition of a nonbanking company, the review also includes whether the acquisition of the nonbanking company complies with the standards in section 4 of the BHC Act (12 U.S.C. 1843). Unless otherwise noted, nonbanking activities will be conducted throughout the United States. Additional information on all bank holding companies may be obtained from the National Information Center Web site at *www.ffiec.gov/nic/*.

Unless otherwise noted, comments regarding each of these applications must be received at the Reserve Bank indicated or the offices of the Board of Governors not later than October 15, 2002.

**A. Federal Reserve Bank of Richmond** (A. Linwood Gill, III, Vice President) 701 East Byrd Street, Richmond, Virginia 23261–4528:

*1. Frances W. Arthur Irrevocable Trust No. 2 for the Benefit of Frances Oxner Jorgenson,* FOJ Management Company, LLC, FOJ Partners, L.P., FOJ Partners II, L.P., JCO Ventures, LLC, JCO Partners, L.P., JCO Partners II, L.P., HAO Management Company, LLC, HAO Partners, L.P., and HAO Partners II, L.P., all of Union, South Carolina; to become bank holding companies by acquiring up to 100 percent of the voting shares of Arthur State Bancshares, Inc., Union, South Carolina, and thereby indirectly acquire Arthur State Bank, Union, South Carolina; Chesnee State Bancshares, Inc., Chesnee, South Carolina, and thereby indirectly acquire Carolina State Bank, Chesnee, South Carolina; and Woodruff State Bancshares, Inc., Woodruff, South Carolina, and thereby indirectly acquire Pinnacle State Bank, Woodruff, South Carolina.

Board of Governors of the Federal Reserve System, September 13, 2002.

**Robert deV. Frierson,**

*Deputy Secretary of the Board.*

[FR Doc. 02–23788 Filed 9–18–02; 8:45 am]

BILLING CODE 6210–01–S

## GENERAL SERVICES ADMINISTRATION

**[OMB Control No. 3090–0044]**

### GSA Submission for OMB Review; GSA Form 3453, Application/Permit for Use of Space in Public Buildings and Grounds

**AGENCY:** General Services Administration (GSA), Public Buildings Service.

**ACTION:** Notice of request for an extension to an existing OMB clearance; request for public comments.

**SUMMARY:** Under the provisions of the Paperwork Reduction Act of 1995 (44 U.S.C. Chapter 35), the General Services Administration (GSA) has submitted to the Office of Management and Budget (OMB) a request to review and approve an extension of a currently approved information collection requirement concerning GSA Form 3453, Application/Permit for Use of Space in Public Buildings and Grounds. OMB reinstated the collection March 2002. A request for public comments was published at 67 FR 30686, May 7, 2002. No comments were received.

Public comments are particularly invited on: Whether the information collection generated by the GSAR Clause, Preparation, Submission, and Negotiation of Subcontracting Plans is necessary for small business/subcontracting plans; whether it will have practical utility; whether our estimate of the public burden of this collection of information is accurate, and based on valid assumptions and methodology; ways to enhance the quality, utility, and clarity of the information to be collected; and ways in which we can minimize the burden of the collection of information on those who are to respond, through the use of appropriate technological collection techniques or other forms of information technology.

**DATES:** *Comment Due Date:* October 21, 2002.

**FOR FURTHER INFORMATION CONTACT:** Charlene Heeter, Public Buildings Service (PX), GSA (202) 208–0214.

**ADDRESSES:** Comments regarding this burden estimate or any other aspect of this collection of information, including suggestions for reducing this burden to Ms. Jeanette Thornton, GSA Desk Officer, OMB, Room 10236, NEOB, Washington, DC 20503, and a copy to Ms. Stephanie Morris, General Services Administration, Regulatory & Federal Assistance Publications Division, 1800 F Street, NW., Room 4035, Washington, DC 20405. Please cite OMB Control Number 3090–0044.

**SUPPLEMENTARY INFORMATION:**

**A. Purpose**

The GSA is requesting the Office of Management and Budget (OMB) to review and renew information collection, 3090–0044, Application/Permit for Use of Space in Public Buildings and Grounds. The general public uses this GSA Form to request the use of public space in Federal buildings for cultural, educational, or recreational activities. A copy, sample, or description of any material or item proposed for distribution or display must also accompany this request.

**B. Annual Reporting Burden**

*Respondents:* 8,000.
*Response Per Respondent:* 1.
*Hours Per Response:* 0.05.
*Total Burden Hours:* 400.

**Obtaining Copies of Proposal**

Requester may obtain a copy of the information collection documents from the General Services Administration, Acquisition Policy Division (MVP), 180 F Street, NW., Room 4035, Washington, DC 20405, telephone (202) 208–7312. Please cite OMB Control No. 3090–0044, GSA Form 3453, Application/Permit for Use of Space in Public Buildings and Grounds, in all correspondence.

Dated: September 13, 2002.

**Michael W. Carlton,**

*Chief Information Officer (I).*

[FR Doc. 02–23791 Filed 9–18–02; 8:45 am]

BILLING CODE 6820–EP–M

## DEPARTMENT OF HEALTH AND HUMAN SERVICES

### Centers for Disease Control and Prevention

**[60Day–02–79]**

### Proposed Data Collections Submitted for Public Comment and Recommendations

In compliance with the requirement of Section 3506(c)(2)(A) of the Paperwork Reduction Act of 1995 for opportunity for public comment on proposed data collection projects, the Centers for Disease Control and Prevention (CDC) will publish periodic summaries of proposed projects. To request more information on the proposed projects or to obtain a copy of the data collection plans and instruments, call the CDC Reports Clearance Officer on (404) 498–1210.

*Comments are invited on:* (a) Whether the proposed collection of information is necessary for the proper performance of the functions of the agency, including whether the information shall have practical utility; (b) the accuracy of the agency's estimate of the burden of the proposed collection of information; (c) ways to enhance the quality, utility, and clarity of the information to be collected; and (d) ways to minimize the burden of the collection of information on respondents, including through the use of automated collection techniques or other forms of information technology. Send comments to Seleda Perryman, CDC Assistant Reports Clearance Officer, 1600 Clifton Road, MS D–24, Atlanta, GA 30333.

*Proposed Project:* Reader Evaluation of ATSDR Agency Profile and Annual Report—New—The Agency for Toxic Substances and Disease Registry (ATSDR) publishes an agency profile and annual report every fiscal year to highlight the agency's major activities and findings. The report provides a record of the agency's significant accomplishments in meeting its mandates under the Comprehensive Environmental Response, Compensation, and Liability Act (CERCLA), as amended, and other Federal statutes. The annual report gives a snapshot of the agency's activities for the fiscal year. It is distributed to our partners in state, Federal, and other agencies; to researchers; schools of public health; and other interested groups. It is also available on ATSDR's Internet website and by request.

ATSDR staff has developed a reader survey to get readers' opinions and suggestions about the agency annual report. The survey will be inserted and mailed with each annual report. An online version of the reader survey will be available on the ATSDR website. The survey will collect information on the readability and effectiveness of the report, the affiliation of the readers, and any suggestions on improving readability or content.

It is anticipated that the reader survey will provide important feedback that will enable ATSDR staff to better tailor future reports to the needs of its readers. Gathering reader feedback will ensure that appropriate information is included in the document to provide a good overview of the agency's activities. The information will be used to improve customer satisfaction related to the annual report. There will be no cost to respondents, as postage will be pre-paid.

The annual burden hours are estimated to be 41.

| Respondents | Number of respondents | Number of responses/respondent | Avg. burden response (in hours) | Total burden (in hours) |
|---|---|---|---|---|
| Academia | 100 | 1 | 5/60 | 8 |
| State and Local Government Staff | 100 | 1 | 5/60 | 8 |
| General Public | 300 | 1 | 5/60 | 25 |
| Total | | | | 41 |

Dated: September 13, 2002.

**Nancy E. Cheal,**

*Acting Deputy Director for Policy, Planning and Evaluation, Centers for Disease Control and Prevention.*

[FR Doc. 02–23793 Filed 9–18–02; 8:45 am]

BILLING CODE 4163–18–P

## DEPARTMENT OF HEALTH AND HUMAN SERVICES

### Centers for Medicare and Medicaid Services

**[Document Identifier: CMS–10067]**

### Agency Information Collection Activities: Submission for OMB Review; Comment Request; Retraction

**ACTION:** Notice; retraction.

**SUMMARY:** In the **Federal Register** issue of Thursday, September 5, 2002, make the following retraction:

Retraction: In the **Federal Register** issue of Thursday, September 5, 2002, Volume 67: No. 172, on page 56845–56846, we wish to retract the emergency notice announcing the Public Information Collection Requirements Submitted to the Office of Management and Budget (OMB) for the ''Pharmacy Plus Template for Low Income Seniors under Medicaid'', form number CMS–10067.

Dated: September 10, 2002.

**John P. Burke,**

*Paperwork Reduction Act Team Leader, CMS Reports Clearance Officer, Office of Strategic Operations and Regulatory Affairs, Division of Regulations Development and Issuances.*

[FR Doc. 02–23769 Filed 9–18–02; 8:45 am]

BILLING CODE 4120–03–P

## DEPARTMENT OF HEALTH AND HUMAN SERVICES

### Health Resources and Services Administration

### National Vaccine Injury Compensation Program; List of Petitions Received

**AGENCY:** Health Resources and Services Administration, HHS.

**ACTION:** Notice.

**SUMMARY:** The Health Resources and Services Administration (HRSA) is publishing this notice of petitions received under the National Vaccine Injury Compensation Program (''the Program''), as required by Section 2112(b)(2) of the Public Health Service (PHS) Act, as amended. While the Secretary of Health and Human Services is named as the respondent in all proceedings brought by the filing of petitions for compensation under the Program, the United States Court of

Federal Claims is charged by statute with responsibility for considering and acting upon the petitions.

**FOR FURTHER INFORMATION CONTACT:** For information about requirements for filing petitions, and the Program in general, contact the Clerk, United States Court of Federal Claims, 717 Madison Place, NW., Washington, DC 20005, (202) 219–9657. For information on HRSA's role in the Program, contact the Director, National Vaccine Injury Compensation Program, 5600 Fishers Lane, Room 8A–46, Rockville, MD 20857; (301) 443–6593.

**SUPPLEMENTARY INFORMATION:** The Program provides a system of no-fault compensation for certain individuals who have been injured by specified childhood vaccines. Subtitle 2 of Title XXI of the PHS Act, 42 U.S.C. 300aa–10 *et seq.*, provides that those seeking compensation are to file a petition with the U.S. Court of Federal Claims and to serve a copy of the petition on the Secretary of Health and Human Services, who is named as the respondent in each proceeding. The Secretary has delegated his responsibility under the Program to HRSA. The Court is directed by statute to appoint special masters who take evidence, conduct hearings as appropriate, and make initial decisions as to eligibility for, and amount of, compensation.

A petition may be filed with respect to injuries, disabilities, illnesses, conditions, and deaths resulting from vaccines described in the Vaccine Injury Table (the Table) set forth at Section 2114 of the PHS Act or as set forth at 42 CFR 100.3, as applicable. This Table lists for each covered childhood vaccine the conditions which will lead to compensation and, for each condition, the time period for occurrence of the first symptom or manifestation of onset or of significant aggravation after vaccine administration. Compensation may also be awarded for conditions not listed in the Table and for conditions that are manifested after the time periods specified in the Table, but only if the petitioner shows that the condition was caused by one of the listed vaccines.

Section 2112(b)(2) of the PHS Act, 42 U.S.C. 300aa–12(b)(2), requires that the Secretary publish in the **Federal Register** a notice of each petition filed. Set forth below is a list of petitions received by HRSA on April 1, 2002, through June 28, 2002.

Section 2112(b)(2) also provides that the special master ''shall afford all interested persons an opportunity to submit relevant, written information'' relating to the following:

1. The existence of evidence ''that there is not a preponderance of the evidence that the illness, disability, injury, condition, or death described in the petition is due to factors unrelated to the administration of the vaccine described in the petition,'' and

2. Any allegation in a petition that the petitioner either:

(a) ''Sustained, or had significantly aggravated, any illness, disability, injury, or condition not set forth in the Table but which was caused by'' one of the vaccines referred to in the Table, or

(b) ''Sustained, or had significantly aggravated, any illness, disability, injury, or condition set forth in the Table the first symptom or manifestation of the onset or significant aggravation of which did not occur within the time period set forth in the Table but which was caused by a vaccine'' referred to in the Table.

This notice will also serve as the special master's invitation to all interested persons to submit written information relevant to the issues described above in the case of the petitions listed below. Any person choosing to do so should file an original and three (3) copies of the information with the Clerk of the U.S. Court of Federal Claims at the address listed above UNDER THE HEADING FOR FURTHER INFORMATION CONTACT), with a copy to HRSA addressed to Director, Division of Vaccine Injury Compensation Program, 5600 Fishers Lane, Room 8A 46, Rockville, MD 20857. The Court's caption (Petitioner's Name v. Secretary of Health and Human Services) and the docket number assigned to the petition should be used as the caption for the written submission.

Chapter 35 of title 44, United States Code, related to paperwork reduction, does not apply to information required for purposes of carrying out the Program.

**List of Petitions**

1. Karen Grubbs on behalf of Benjamin Grubbs, Vienna, Virginia—Court of Federal Claims Number 02–0251V
2. Catherine Wiley on behalf of Everett Wiley, Fresno, California—Court of Federal Claims Number 02–0252V
3. Diane Oakley on behalf of Trevor Oakley, Vienna, Virginia—Court of Federal Claims Number 02–0253V
4. Roger Strunk, Reading, Pennsylvania—Court of Federal Claims Number 02–0254V
5. Tami and Ralph Gonzalez on behalf of Oscar Rafael Gonzalez, Los Angeles, California—Court of Federal Claims Number 02–0256V
6. Angela and Bruce Hewett on behalf of Hunter Blake Hewett, Fort Worth, Texas—Court of Federal Claims Number 02–0257V
7. Danny W. Caldwell, Statesville, North Carolina—Court of Federal Claims Number 02–0258V
8. Elizabeth and James O'Hea on behalf of Evan James O'Hea, Rockford, Illinois—Court of Federal Claims Number 02–0259V
9. Tima Mehok on behalf of Anthony Edward Rodriguez, Robbinsdale, Minnesota—Court of Federal Claims Number 02–0260V
10. Anne and Anthony Christie on behalf of Anthony Neil Christie, Houston, Texas—Court of Federal Claims Number 02–0262V
11. Virginia and Carl Williams on behalf of Carl Houston Williams, Mount Sterling, Kentucky—Court of Federal Claims Number 02–0263V
12. Deanna and Randy Beinlich on behalf of Allan Beinlich, Weatherford, Texas—Court of Federal Claims Number 02–0264V
13. Terrilyn Singer on behalf of Zachary Stephen Singer, Allentown, Pennsylvania—Court of Federal Claims Number 02–0265V
14. Carla and Jeffrey Barres on behalf of Morgan Ruth Barres, San Antonio, Texas—Court of Federal Claims Number 02–0266V
15. Chen-Zhi Jian and Mei-Chin Lai on behalf of Gerald Lai Jian, Falls Church, Virginia—Court of Federal Claims Number 02–0267V
16. Erica Goodman on behalf of Aaron Rashad Jacobs, Baltimore, Maryland—Court of Federal Claims Number 02–0268V
17. Tina and Jerome Cain on behalf of Jared Jerome Cain, Monticello, Minnesota—Court of Federal Claims Number 02–0269V
18. Zembralynn and Rodney Hagler on behalf of Mackendi Jaquist Hagler, Houston, Texas—Court of Federal Claims Number 02–0270V
19. Jeannie and Donald Larson on behalf of Matthew Larson, Nashua, New Hampshire—Court of Federal Claims Number 02–0276V
20. Julia Whiting on behalf of Molly Malone, Boston, Massachusetts—Court of Federal Claims Number 02–0277V
21. Carolyn Shires on behalf of Michael Ray Spadafore, Jr.,
Tacoma, Washington—Court of Federal Claims Number 02–0283V
22. Arlene Gresham on behalf of Paul Hassan Robinson, Drexel Hill, Pennsylvania—Court of Federal Claims Number 02–0284V
23. Tyra and Elliott Rubin on behalf of Zarek Ezekiel Rubin, Philadelphia, Pennsylvania—Court of Federal Claims Number 02–0285V
24. Jill Barrett on behalf of Brandon Lee Barrett, Aberdeen, South Dakota—Court of Federal Claims Number 02–0286V
25. Tracy and Scott Willow on behalf of Brett Michael Willow, Coatesville, Pennsylvania—Court of Federal Claims Number 02–0287V
26. Darlene and Santos Fernandez on behalf of Santos Orlando Fernandez, Jr., Baltimore, Maryland—Court of Federal Claims Number 02–0288V
27. David W. Krebs and Glenda K. Gruno-Krebs on behalf of Zachary Scott Krebs, Grand Rapids, Michigan—Court of Federal Claims Number 02–0289V
28. Gloria and David Roman on behalf of Johnathan David Roman, New York, New

York—Court of Federal Claims Number 02–0290V
29. Tonya Lynn Logan on behalf of Lamarco Dontel Logan, Houston, Texas—Court of Federal Claims Number 02–0291V
30. Pam and Jeffrey Kocina on behalf of Garrett Kocina, Deceased, Altus Air Force Base, Oklahoma—Court of Federal Claims Number 02–0292V
31. Pamela McDowell on behalf of Courtney Taylor McDowell, Little Rock, Arkansas—Court of Federal Claims Number 02–0297V
32. Alicia and Blane Meeks on behalf of Aidan C. Meeks, Melbourne, Florida—Court of Federal Claims Number 02–0298V
33. Leslie Ann and Douglas Brian Mann on behalf of Mark Douglas Mann, Augusta, Georgia—Court of Federal Claims Number 02–0302V
34. Lisa and Chuck Dipietro on behalf of Daniel Cosmo Dipietro, Geneva, Illinois—Court of Federal Claims Number 02–0303V
35. Diana Barajas on behalf of Kristopher Mark Anthony Dominquez, Jr., Denver, Colorado—Court of Federal Claims Number 02–0304V
36. Vanessa Albert on behalf of Jennifer Kay Albert, Boston, Massachusetts—Court of Federal Claims Number 02–0305V
37. Steven Sedlock on behalf of Brian Sedlock, Deceased, Boston, Massachusetts—Court of Federal Claims Number 02–0308V
38. Angela Colosi on behalf of Stephanie Colosi, Charleston, South Carolina—Court of Federal Claims Number 02–0310V
39. Janet and Philip Fields on behalf of Christy Ranay Fields, Vienna, Virginia—Court of Federal Claims Number 02–0311V
40. Shawna and Matthew Smith on behalf of Ethan Smith, Vienna, Virginia—Court of Federal Claims Number 02–0312V
41. Wendy Forbin, Bakersfield, California—Court of Federal Claims Number 02–0319V
42. Jennifer and Barrie Goodridge on behalf of David Goodridge, Jersey City, New Jersey—Court of Federal Claims Number 02–0320V
43. Jacqueline Crear on behalf of Joshua Lee Crear, Houston, Texas—Court of Federal Claims Number 02–0321V
44. Darlene and Robert Spatafore on behalf of Nicole Danielle Spatafore, Bronxville, New York—Court of Federal Claims Number 02–0322V
45. Holly and William Derricks on behalf of William Daniel Derricks, Philadelphia, Pennsylvania—Court of Federal Claims Number 02–0323V
46. Donna and Paul Brown on behalf of Shawn Anthony Brown, Houston, Texas—Court of Federal Claims Number 02–0324V
47. Janet and Phillip Borum on behalf of Bobby Lowell Borum, II, Chula Vista, California—Court of Federal Claims Number 02–0325V
48. Yves and Mirlande Jean Nicolas on behalf of Shaklee Yves Nicolas, Boston, Massachusetts—Court of Federal Claims Number 02–0326V
49. Victoria Vapata on behalf of Charles Allen Jackson, Jr., Houston, Texas—Court of Federal Claims Number 02–0327V
50. Aleeta Karras on behalf of Joseph Joshua Karras, Las Vegas, Nevada—Court of Federal Claims Number 02–0328V
51. Karen and Leroy Gardner on behalf of Rachel Anne Gardner, Nederland, Texas—Court of Federal Claims Number 02–0329V
52. Trina and Paul Troutt on behalf of Zachary Paul Troutt, Lebanon, Tennessee—Court of Federal Claims Number 02–0330V
53. Pamela and Dena Gossett on behalf of Jacob Alexander Gossett, Duluth, Minnesota—Court of Federal Claims Number 02–0331V
54. Kimberly and James Lee on behalf of Keenan Rudolph Lee, Berkeley, California—Court of Federal Claims Number 02–0332V
55. Marcelle and Michael Freeby on behalf of Aaron James Freeby, Houston, Texas—Court of Federal Claims Number 02–0333V
56. Karina and Eric Rosello on behalf of Alexis Rosello, McAllen, Texas—Court of Federal Claims Number 02–0334V
57. Josephine and Amos Chiles on behalf of Amos Chiles, III, Houston, Texas—Court of Federal Claims Number 02–0335V
58. Antoinette Celli and Nicholas Celli Calderone on behalf of Anthony Joseph Celli Pomona, New Jersey—Court of Federal Claims Number 02–0336V,
59. Carrie Snortland on behalf of Dylan Snortland, Boston, Massachusetts—Court of Federal Claims Number 02–0337V,
60. Shirley Bunker on behalf of Tanner Bunker, Deceased, Appleton, Wisconsin—Court of Federal Claims Number 02–0338V,
61. John Rouleau on behalf of Michael Rouleau, Vienna, Virginia—Court of Federal Claims Number 02–0339V,
62. Michele and Michael Simpson on behalf of Bryce Simpson, Vienna, Virginia—Court of Federal Claims Number 02–0340V,
63. Judith and Elbert Avery on behalf of Isaiah T. Avery, Minneapolis, Minnesota—Court of Federal Claims Number 02–0346V
64. Julia and John Scott on behalf of Isaac Puiett Scott, Andrews Air Force Base, Maryland—Court of Federal Claims Number 02–0347V
65. Portica and Robert Jones on behalf of Robert E. Jones, III, Owensboro, Kentucky—Court of Federal Claims Number 02–0348V
66. Leah and Robert Schrom on behalf of Robert Clayton Schrom, Rimrock, Arizona—Court of Federal Claims Number 02–0349V
67. Kelly and James Vance on behalf of Jesse Taylor Vance, Winter Haven, Florida—Court of Federal Claims Number 02–0350V
68. Lauri and Jeffrey Javes on behalf of Samantha Ann Javes, Fridley, Minnesota—Court of Federal Claims Number 02–0351V
69. Adele and Andrew Hahn on behalf of Alexander J. Hahn, Union, New Jersey—Court of Federal Claims Number 02–0352V
70. Cynthia and Dean Margolis on behalf of Matthew Adam Margolis, Edina, Minnesota—Court of Federal Claims Number 02–0353V
71. Jane and Thomas Conover on behalf of Steven Lyons Conover, Long Beach, California—Court of Federal Claims Number 02–0354V
72. Stacey and Lawrence Wolff on behalf of Jordan Wolff, Houston, Texas—Court of Federal Claims Number 02–0355V
73. Latonya Williams and Larry Green on behalf of Thaddeaus Malik Williams, Houston, Texas—Court of Federal Claims Number 02–0356V
74. Melissa and Tom Bowden on behalf of Thomas M. Bowden, Jr., Houston, Texas—Court of Federal Claims Number 02–0357V
75. Martha and Jimmy Weatherford on behalf of Jamie Gail Weatherford, Garland, Texas—Court of Federal Claims Number 02–0358V
76. Patty and Charles Holcomb on behalf of Emily Ruth Holcomb, Tupelo, Mississippi—Court of Federal Claims Number 02–0359V
77. Dorothy and Cortez Spikes on behalf of Selena Faith Spikes, Beaumont, Texas—Court of Federal Claims Number 02–0360V
78. Bonnie and Mark Ripley on behalf of Devon L. Acosta, New Orleans, Louisiana—Court of Federal Claims Number 02–0361V
79. Holly and Jose Masclans on behalf of Benjamin David Masclans, Haddonfield, New Jersey—Court of Federal Claims Number 02–0362V
80. Kathleen and Christopher Dugan on behalf of Matthew Thomas Dugan, West Islip, New York—Court of Federal Claims Number 02–0363V
81. Janice Parker and Ernest Culver, Jr. on behalf of Klayton Arthur Parker, Robbinsdale, Minnesota—Court of Federal Claims Number 02–0364V
82. Brenda and Lewis Calderone on behalf of David C. Calderone, Brick, New Jersey—Court of Federal Claims Number 02–0365V
83. Lisa Dawn Moore Jamail on behalf of Jacob Bryant Jamail, Kingwood, Texas—Court of Federal Claims Number 02–0366V
84. Seddega Mahdi and James Thomas on behalf of Jonathan M. Thomas, Houston, Texas—Court of Federal Claims Number 02–0367V
85. Mario Arechiga and Susan Synn on behalf of Alec Gregory Arechiga, San Jose, California—Court of Federal Claims Number 02–0368V
86. Patricia and Thomas Wills on behalf of Thomas Anthony Wills, Philadelphia, Pennsylvania—Court of Federal Claims Number 02–0369V
87. Tina and James Tyler on behalf of James Edward Tyler, III, Oaklawn, Illinois—Court of Federal Claims Number 02–0370V
88. Greta and Jeffrey Garza on behalf of Renata Noelle Garza, Corpus Christie, Texas—Court of Federal Claims Number 02–0371V
89. Gina and Daniel Grijalva on behalf of Austin John Grijalva, Oceanside, California—Court of Federal Claims Number 02–0372V
90. Cheryl and William Kraus on behalf of William Daniel Kraus, Huntington, New York—Court of Federal Claims Number 02–0373V
91. Gail and Emilio Porto on behalf of Henry Darren Porto, Miami, Florida—Court of Federal Claims Number 02–0374V
92. Tina and Steven Byrnes on behalf of Lily Byrnes, Brick, New Jersey—Court of Federal Claims Number 02–0375V
93. Denise and Eugene Perkins on behalf of David Anthony Perkins, Boston, Massachusetts—Court of Federal Claims Number 02–0376V

94. Rhonda and Thomas Ivey on behalf of Johniathin D. Ivey, Danville, Pennsylvania—Court of Federal Claims Number 02–0377V
95. Rhonda and Thomas Ivey on behalf of Thomas P. Ivey, IV, Danville, Pennsylvania—Court of Federal Claims Number 02–0378V
96. Guerline Francis on behalf of Kederson Michel, Jr., Boston, Massachusetts—Court of Federal Claims Number 02–0379V
97. Luzelva and Elias Vasquez on behalf of Andres Vasquez, Austin, Texas—Court of Federal Claims Number 02–0380V
98. Julie and Eugene Evans on behalf of Eugene Jewett Evans, Jr., Washington, D.C.,—Court of Federal Claims Number 02–0381V
99. Beth P. Moore on behalf of Jonathan Carl Moore, Baltimore, Maryland—Court of Federal Claims Number 02–0382V
100. Iris Eileen Day on behalf of Kayla Dawn Anderson, Harrisonburg, Virginia—Court of Federal Claims Number 02–0383V
101. Mary Ann and Scott McMillen on behalf of Benjamin James McMillen, Louisville, Kentucky—Court of Federal Claims Number 02–0386V
102. Kristy Purdom on behalf of Joshua Paul Melancon, New Iberia, Louisiana—Court of Federal Claims Number 02–0387V
103. Jacqueline and Timothy Hamilton on behalf of Colin Wade Hamilton, Silver Spring, Maryland—Court of Federal Claims Number 02–0388V
104. Linda Witherspoon on behalf of Tyshown Gibson, Los Angeles, California—Court of Federal Claims Number 02–0389V
105. Cheryl and William Smith on behalf of Trent Coleman Smith, Clear Lake, Texas—Court of Federal Claims Number 02–0390V
106. Vergedretta Dushane Thomas on behalf of NyJerri Shandrea Thomas, Houston, Texas—Court of Federal Claims Number 02–0391V
107. Diane and Nicholas LeRoy on behalf of Nicholas Arthur LeRoy, Houston, Texas—Court of Federal Claims Number 02–0392V
108. David Sechrist on behalf of Abigail Faith Sechrist, Deceased, Vienna, Virginia—Court of Federal Claims Number 02–0393V
109. Tabatha and William Minor on behalf of Stephanie Minor, Deceased, Rome, New York—Court of Federal Claims Number 02–0394V
110. Laura Holtzclaw on behalf of Hanna Grace Holtzclaw, Vienna, Virginia—Court of Federal Claims Number 02–0395V
111. Juliana P. Maffei on behalf of John S. Maffei, Vienna, Virginia—Court of Federal Claims Number 02–0396V
112. Debra and Rob Veglia on behalf of Domenick Veglia, Palm Beach Gardens, Florida—Court of Federal Claims Number 02–0397V
113. Laurie and Michael Kinner on behalf of Liana Joele Kinner, Annapolis, Maryland—Court of Federal Claims Number 02–0398V
114. Angela and Mark Kempton on behalf of Austin Kile Kempton, Orlando, Florida—Court of Federal Claims Number 02–0399V
115. Michel Small on behalf of Zoe Jae Baldwin, Torrance, California—Court of Federal Claims Number 02–0402V
116. Jeff Cooper on behalf of Griffen Cooper, Boston, Massachusetts—Court of Federal Claims Number 02–0406V
117. Paula Degovia on behalf of Lorenzo Degovia, Boston, Massachusetts—Court of Federal Claims Number 02–0409V
118. James L. Paterek on behalf of James Leonard Paterek, Jr., New York, New York—Court of Federal Claims Number 02–0411V
119. Theresa Richardson on behalf of Dylan Richardson, Boston, Massachusetts—Court of Federal Claims Number 02–0412V
120. Victoria and Scott Greenspan on behalf of Victor Greenspan, Philadelphia, Pennsylvania—Court of Federal Claims Number 02–0413V
121. Michelle and Benny Wudowsky on behalf of Andrew Michael Wudowsky, Rockville Center, New York—Court of Federal Claims Number 02–0414V
122. Kerri and Richard Tanner on behalf of Dakota Leighton Tanner, Chandler, Arizona—Court of Federal Claims Number 02–0415V
123. Per Nielsen and Alem Debas on behalf of Matthew Nitai Nielsen, Rockville, Maryland—Court of Federal Claims Number 02–0416V
124. Lakeisha and Aaron Clements on behalf of Lance Lamar Clements, Lawrenceville, New Jersey—Court of Federal Claims Number 02–0417V
125. Lisa and William Fotopoulos on behalf of Jake Alexander Fotopoulos, Southampton, New York—Court of Federal Claims Number 02–0418V
126. Brandy and Stephen Montgomery on behalf of Zechariah Connor Montgomery, Baltimore, Maryland—Court of Federal Claims Number 02–0419V
127. Natalia and Peter D'Arrigo on behalf of Christopher Peter D'Arrigo, Glen Cove, New York—Court of Federal Claims Number 02–0420V
128. Melissa and Richard Legg on behalf of Emily Marie Legg, Hilliard, Ohio—Court of Federal Claims Number 02–0421V
129. Julia and William Snoeberger on behalf of Jacob Andrew Snoeberger, Gahanna, Ohio—Court of Federal Claims Number 02–0422V
130. Robin and Keith Scheffler on behalf of Kyle Aubrey Scheffler, Morristown, New Jersey—Court of Federal Claims Number 02–0423V
131. Susan and Ward Weischet on behalf of Taylor Caroline Weischet, New Haven, Connecticut—Court of Federal Claims Number 02–0424V
132. Kelli and Matt Kash on behalf of Meghan Brooke Kash, Houston, Texas—Court of Federal Claims Number 02–0425V
133. Deborah and Herbert Gump on behalf of Hunter Alec Gump, Virginia Beach, Virginia—Court of Federal Claims Number 02–0426V
134. Jennifer and John Snyder on behalf of Zachary Bayne Snyder, Altamonte Springs, Florida—Court of Federal Claims Number 02–0427V
135. Lisa and David Turner on behalf of Kenneth Joseph Turner, Towson, Maryland—Court of Federal Claims Number 02–0428V
136. Kristy Giles on behalf of Christian William Giles, Watersville, Ohio—Court of Federal Claims Number 02–0429V
137. Helen and John Skevofilax on behalf of Michael Skevofilax, Bel Air, Maryland—Court of Federal Claims Number 02–0433V
138. James Schmitt on behalf of Gunnar Schmitt, Boston, Massachusetts, Court of Federal Claims Number 02–0434V
139. James Schmitt on behalf of Ronald Schmitt, Boston, Massachusetts—Court of Federal Claims Number 02–0435V
140. Darlene and Robert Kryzywicki on behalf of Thomas Kryzywicki, Meadowbrook, Pennsylvania—Court of Federal Claims Number 02–0436V
141. Marjan and Mark Heims on behalf of Scarlet Tanya Heims, Mechanicsville, Virginia—Court of Federal Claims Number 02–0437V
142. Tina and Walter Bonafield on behalf of Joseph Connor Bonafield, Bridgeport, West Virginia—Court of Federal Claims Number 02–0438V
143. Krista Birchfield on behalf of Dylan Clay Johnson, Urbana, Illinois—Court of Federal Claims Number 02–0439V
144. Patricia and Anthony Horvat on behalf of Raymond Milan Horvat, Mayfield Heights, Ohio—Court of Federal Claims Number 02–0440V
145. Tania Woods on behalf of Markiel Keshawn McDaniel, Oakland, California—Court of Federal Claims Number 02–0441V
146. Rebecca and William Khoury on behalf of Joshua Osama Khoury, Del Rio, Texas—Court of Federal Claims Number 02–0442V
147. Cynthia and Shawn Sawmiller on behalf of Cameron Ari Sawmiller, Lima, Ohio—Court of Federal Claims Number 02–0443V
148. Donna and Michael Lawlor on behalf of Terrence Michael Lawlor, Glenridge, New Jersey—Court of Federal Claims Number 02–0444V
149. Elaine and Dickie Maulden on behalf of Caleb Christopher Johnson, Elizabethtown, Kentucky—Court of Federal Claims Number 02–0445V
150. John Healy and Theresa Yard on behalf of Sean Flin Healy, Mineola, New York—Court of Federal Claims Number 02–0446V
151. Rose and Nick Salvemini on behalf of Nicholas Christopher Salvemini, Wayne, New Jersey—Court of Federal Claims Number 02–0447V
152. Stacey Morgan on behalf of Trae Vann Morgan-White, Landsdowne, Pennsylvania—Court of Federal Claims Number 02–0448V
153. Michelle and Joseph Mleczko on behalf of Augustus Maximilian Mleczko, Palos Heights, Illinois—Court of Federal Claims Number 02–0449V
154. Deborah and Ryan Armstrong on behalf of Evan Ryan Armstrong, Louisville, Kentucky—Court of Federal Claims Number 02–0450V
155. Laura and Abraham Gincel on behalf of Paul Jacob Gincel, Herndon, Virginia—Court of Federal Claims Number 02–0451V
156. Lisa Dressler Wehrung on behalf of Zara Wehrung, Boston, Massachusetts—Court of Federal Claims Number 02–0452V
157. Maria Aguilar on behalf of Adgar Herrera, Anaheim, California—Court of Federal Claims Number 02–0455V
158. Rhonda and David Martin on behalf of Jacob Lee Martin, Youngstown, Ohio—Court of Federal Claims Number 02–0457V

159. Rebecca and John Maher on behalf of Alexander Joseph Maher, Lexington, Kentucky—Court of Federal Claims Number 02–0458V
160. Brandy LeJeune on behalf of Riley Herbert LeJeune, Lafayette, Louisiana—Court of Federal Claims Number 02–0467V
161. Carla and Christopher Loving on behalf of Camille Loving, Detroit, Michigan—Court of Federal Claims Number 02–0469V
162. Shelley and Lori Winn on behalf of Trevor Winn, Tualatin, Oregon—Court of Federal Claims Number 02–0470V
163. Lillian Abtahi and Seyed Hossein on behalf of Zena Abtahi, Houston, Texas—Court of Federal Claims Number 02–0471V
164. Marcia and Brian Hooker on behalf of Steven Hooker, Vienna, Virginia—Court of Federal Claims Number 02–0472V
165. Tamara Heydt on behalf of Gavin Heydt, Boston, Massachusetts—Court of Federal Claims Number 02–0473V
166. Barbara Roth on behalf of Spencer Roth, Fargo, North Dakota—Court of Federal Claims Number 02–0475V
167. Darnell Warren and Krystilynn Williams on behalf of Darnell Warren, Jr., Deceased, Gretna, Louisiana—Court of Federal Claims Number 02–0476V
168. Gregory Rivera on behalf of Gregory Rivera, Boston, Massachusetts—Court of Federal Claims Number 02–0480V
169. Carolyn Brown on behalf of Connor Brown, Boston, Massachusetts—Court of Federal Claims Number 02–0481V
170. Julie Holcomb on behalf of Zack Holcomb, Boston, Massachusetts—Court of Federal Claims Number 02–0485V
171. Julie Holcomb on behalf of Cody Holcomb, Boston, Massachusetts—Court of Federal Claims Number 02–0486V
172. Elzbieta and Louis Carnevale on behalf of Joseph M. Carnevale, Southhampton, New York—Court of Federal Claims Number 02–0487V
173. Angela Nelson on behalf of Brandon Nicholas Nelson, Silver Spring, Maryland—Court of Federal Claims Number 02–0488V
174. Paula and Patrick Hansberry on behalf of Patrick Tyler Hansberry, Absecon, New Jersey—Court of Federal Claims Number 02–0489V
175. Susanne and Michael Tuckerman on behalf of Edward David Tuckerman, Meadowbrook, Pennsylvania—Court of Federal Claims Number 02–0490V
176. Susanne and Michael Tuckerman on behalf of Michael Donovan Tuckerman, Meadowbrook, Pennsylvania—Court of Federal Claims Number 02–0491V
177. Candice Woodridge on behalf of Alexion Laterius Jaque Dennis, Evergreen Park, Illinois—Court of Federal Claims Number 02–0492V
178. Penny and James De La Fuente on behalf of Darian Lee De La Fuente, Lancaster, California—Court of Federal Claims Number 02–0493V
179. Michele and Adrian Jennings on behalf of Ryan Jesse Jennings, Richardson, Texas—Court of Federal Claims Number 02–0494V
180. Macario and San Juana Camarillo Guerrero on behalf of Pedro Daniel Guerrero, McAllen, Texas—Court of Federal Claims Number 02–0495V
181. Richard Meier and Cathy Roccia-Meier on behalf of Pierce Anthony Meier, Philadelphia, Pennsylvania—Court of Federal Claims Number 02–0496V
182. Aimee Whittington on behalf of Jacob Tyler Harold Campbell, South Charleston, West Virginia—Court of Federal Claims Number 02–0497V
183. Samantha and Odis Carroll on behalf of Peyton Lee Carroll, Danville, Kentucky—Court of Federal Claims Number 02–0498V
184. Carolyn and Charles Coleman on behalf of Camara Dalia Coleman, Boston, Massachusetts—Court of Federal Claims Number 02–0499V
185. Maureen and James Grace on behalf of Aaron Joseph Grace, Jacksonville, Florida—Court of Federal Claims Number 02–0500V
186. Audrey Latimore on behalf of Kameron M. Latimore, Greenville, South Carolina—Court of Federal Claims Number 02–0501V
187. Amy and Darian Vietzke on behalf of Jason Vietzke, Minneapolis, Minnesota—Court of Federal Claims Number 02–0503V
188. Valeri Dugan on behalf of Jenna Dugan, Boston, Massachusetts—Court of Federal Claims Number 02–0505V
189. Donna Swisher on behalf of Hayden Swisher, Boston, Massachusetts—Court of Federal Claims Number 02–0506V
190. Phyllis Parmelee on behalf of Tyler Parmelee, Boston, Massachusetts—Court of Federal Claims Number 02–0507V
191. Susan Wilson, Los Angeles, California—Court of Federal Claims Number 02–0511V
192. Carl Belotti Yakima, Washington—Court of Federal Claims Number 02–0512V
193. Helen and Kevin Hernandez on behalf of Hayley D. Hernandez, Falls Church, Virginia—Court of Federal Claims Number 02–0514V
194. Patricia Barrett on behalf of Robert Owen Barrett, Holbrook, New York—Court of Federal Claims Number 02–0515V
195. Natalie Martin on behalf of Hannah Martin, Boston, Massachusetts—Court of Federal Claims Number 02–0518V
196. Jan Gunter on behalf of Austin Gunter, Boston, Massachusetts—Court of Federal Claims Number 02–0519V
197. Albert Potts on behalf of Elizabeth Potts, Boston, Massachusetts—Court of Federal Claims Number 02–0520V
198. Rita and Eric Dodd on behalf of Andrew Joseph Dodd, Sandusky, Ohio—Court of Federal Claims Number 02–0521V
199. Ann and Imran Ballout on behalf of Serena Ballout, Palos Heights, Illinois—Court of Federal Claims Number 02–0522V
200. Nicole and Shannon Gallagher on behalf of Megan Gallagher, Abington, Pennsylvania—Court of Federal Claims Number 02–0523V
201. Anna and George Harding on behalf of Andrew Gerald Harding, Burnesville, Minnesota—Court of Federal Claims Number 02–0524V
202. Kia and Norman Murray on behalf of Quinn Terrance Murray, Claremont, New Hampshire—Court of Federal Claims Number 02–0525V
203. Theresa and James Kalhorn on behalf of Serena Megan Kalhorn, Maplewood, Minnesota—Court of Federal Claims Number 02–0526V
204. Mitsy Newberry on behalf of Eugene Jason Allen Newberry, Fort Worth, Texas—Court of Federal Claims Number 02–0527V
205. Ena and Herbert Cooper on behalf of Herbert Emmanuel Cooper, III, Upper Derby, Pennsylvania—Court of Federal Claims Number 02–0528V
206. Rosa and Eduardo Ortiz on behalf of Eddie Xavier Ortiz, Arlington, Texas—Court of Federal Claims Number 02–0529V
207. Amy Hartgrove on behalf of Kyle S. Mann, LaSalle, Texas—Court of Federal Claims Number 02–0530V
208. Wendy and Douglas Bruttomesso on behalf of Jack Ryan Bruttomesso, Houston, Texas—Court of Federal Claims Number 02–0531V
209. Martha and Yuri Cobos on behalf of Leonel Cobos, Oakland, California—Court of Federal Claims Number 02–0532V
210. Joanne and Jerry Sheridan on behalf of Jake Cole Sheridan, Elkins Park, Pennsylvania—Court of Federal Claims Number 02–0533V
211. Lisa and Joseph Borner on behalf of Morgan Elizabeth Borner, Philadelphia, Pennsylvania—Court of Federal Claims Number 02–0534V
212. Karin Fossum and Rakan Alanzi on behalf of Ahmar Rakan Leif Fossum-Alanzi, Arlington, Texas—Court of Federal Claims Number 02–0535V
213. Eugenia and Andrei Elisseev on behalf of Daniel A. Elisseev, Dallas, Texas—Court of Federal Claims Number 02–0536V
214. Mareta and Donald Jackson on behalf of Donald Louis Jackson, Jr., Salt Lake City, Utah—Court of Federal Claims Number 02–0537V
215. Rosalind and Eric Simmons on behalf of Tyler Lenn Simmons, Lutherville, Maryland—Court of Federal Claims Number 02–0538V
216. Martha and Yuri Cobos on behalf of Misael Cobos, Oakland, California—Court of Federal Claims Number 02–0539V
217. Eleanor and Eric Vander Mel on behalf of Eric Christian Vander Mel, Jr., Providence, Rhode Island—Court of Federal Claims Number 02–0540V
218. Janice Zeno on behalf of Moziah Malcom Malik Zeno, Berkley, California—Court of Federal Claims Number 02–0541V
219. Daniella Mackin on behalf of Michaela Lacey Mackin, Malden, Massachusetts—Court of Federal Claims Number 02–0542V
220. Esther and Thomas Blevins on behalf of Israel Josiah Blevins, Montebello, California—Court of Federal Claims Number 02–0543V
221. James Bowser and Annemarie Brosch on behalf of James Thomas Bowser, II, Garfield Heights, Ohio—Court of Federal Claims Number 02–0544V
222. Lisa Barbato and Glenn Goldstein on behalf of Jacob Benjamin Barbato Goldstein, Berkeley, California—Court of Federal Claims Number 02–0545V
223. Kristen De La Guardie on behalf of Mathew Hudson De La Guardie, San Ramon Valley, California—Court of Federal Claims Number 02–0546V
224. Laura Munion on behalf of Lotus Saphire Thurman, Portsmouth, Ohio—Court of Federal Claims Number 02–0547V

225. Laura Munion on behalf of Celest Ehlana Thurman, Portsmouth, Ohio—Court of Federal Claims Number 02–0548V
226. Nancy Guberti on behalf of Marc Guberti, Boston, Massachusetts—Court of Federal Claims Number 02–0549V
227. Rosemary Cordes on behalf of Loren Cordes, Boston, Massachusetts—Court of Federal Claims Number 02–0550V
228. Yolanda Gallagher on behalf of Hunter Gallagher, Boston, Massachusetts—Court of Federal Claims Number 02–0551V
229. Joy Brown on behalf of Duncan Brown, Vienna, Virginia—Court of Federal Claims Number 02–0552V
230. Bob Cunningham and Lisa Kaplan on behalf of Lindsey Cunningham, Vienna, Virginia—Court of Federal Claims Number 02–0553V
231. Mandy and Lee Campbell on behalf of Taylor Marie Campbell, Vienna, Virginia—Court of Federal Claims Number 02–0554V
232. Jayne Irons on behalf of Chaisson Irons, Vienna, Virginia—Court of Federal Claims Number 02–0555V
233. Kelly O'Brien on behalf of Daniel Thomas O'Brien, Vienna, Virginia—Court of Federal Claims Number 02–0556V
234. Lynne Garrison on behalf of Kyle W. Garrison, Clinton, Maryland—Court of Federal Claims Number 02–0559V
235. Miguel Lopez on behalf of Miguel Angel Lopez, Boston, Massachusetts—Court of Federal Claims Number 02–0560V
236. Theresa Madore on behalf of Andrew Madore, Boston, Massachusetts—Court of Federal Claims Number 02–0561V
237. Sanots Mora on behalf of Daphne Mora, Boston, Massachusetts—Court of Federal Claims Number 02–0562V
238. Katrina Morrison on behalf of Alexander Morrison, Boston, Massachusetts—Court of Federal Claims Number 02–0563V
239. Rhonda Tetemanza on behalf of Walker Tetemanza, Boston, Massachusetts—Court of Federal Claims Number 02–0564V
240. Deseri Montgomery on behalf of Keaton Taylor Montgomery, Vienna, Virginia—Court of Federal Claims Number 02–0565V
241. Caroline Cohen, Vienna, Virginia—Court of Federal Claims Number 02–0566V
242. Cindy Bramblett on behalf of Tristan Bramblett, Vienna, Virginia—Court of Federal Claims Number 02–0567V
243. James Muller on behalf of Chase Muller, Vienna, Virginia—Court of Federal Claims Number 02–0568V
244. Latoya Baker, Boston, Massachusetts—Court of Federal Claims Number 02–0569V
245. Jennifer Arsenault on behalf of Luc Arsenault, Boston, Massachusetts—Court of Federal Claims Number 02–0570V
246. Janie and Barry Donovan on behalf of Kathryn Donovan, Philadelphia, Pennsylvania—Court of Federal Claims Number 02–0572V
247. Tonia and Jeffrey Anderson on behalf of Kenneth Robert Norwood, Knoxville, Tennessee—Court of Federal Claims Number 02–0573V
248. Linda and Melville Jones on behalf of Tatyana Nole Jones, Philadelphia, Pennsylvania—Court of Federal Claims Number 02–0574V
249. Julia and John Scott on behalf of Isaac Pruitt Scott, Andrews Air Force Base, Maryland—Court of Federal Claims Number 02–0575V
250. Lorrie and Patrick Struve on behalf of Dalton James Struve, Salt Lake City, Utah—Court of Federal Claims Number 02–0576V
251. Nicole and Shannon Gallagher on behalf of Lauren Nicole Gallagher, Lansdale, Pennsylvania—Court of Federal Claims Number 02–0577V
252. Annie Dilworth on behalf of Scotavious Demetrius Hamilton, Belle Colade, Florida—Court of Federal Claims Number 02–0578V
253. Donna Annette Kean, San Juan, Puerto Rico—Court of Federal Claims Number 02–0579V
254. Scott Paswaters on behalf of Lauren Paswaters, Louisville, Colorado—Court of Federal Claims Number 02–0586V
255. Virginia and Robert LaMonica on behalf of Nicholas Robert LaMonica, Oakdale, New York—Court of Federal Claims Number 02–0587V
256. Tina Martin on behalf of Alexander Jared Bonds, Chicago, Illinois—Court of Federal Claims Number 02–0588V
257. Darlene and Michael Capobianco on behalf of Matthew Emilio Capobianco, Mineola, New York—Court of Federal Claims Number 02–0589V
258. Jonathan D. Alicea on behalf of Jonathan Jalen Alicea, Mesa, Arizona—Court of Federal Claims Number 02–0590V
259. Melissa and James Kaeser on behalf of Alissa M. Kaeser, Havertown, Pennsylvania—Court of Federal Claims Number 02–0591V
260. Joanne and Louis Berman on behalf of Louis Mark Berman, Jr., Abington, Pennsylvania—Court of Federal Claims Number 02–0592V
261. Katima Gibson on behalf of Venica Manuela Velazquez, Pasadena, California—Court of Federal Claims Number 02–0593V
262. Dawna and Eric Knight on behalf of Matthew Grayson Knight, San Jose, California—Court of Federal Claims Number 02–0594V
263. Anna and Robert Knowles on behalf of Robert Salvatore Knowles, Great Neck, New York—Court of Federal Claims Number 02–0595V
264. Cynthia and Allen Joas on behalf of Allen James Joas, Jr., Racine, Wisconsin—Court of Federal Claims Number 02–0596V
265. Mary and Daniel Curtin on behalf of Danielle Johanna Curtin, Bronxville, New York—Court of Federal Claims Number 02–0597V
266. Crispin Lara and Nubia Zavala on behalf of Ronny Daniel Lara, Houston, Texas—Court of Federal Claims Number 02–0598V
267. Virginia Rodriguez-Gonzalez on behalf of Eugene Anderson, Dallas, Texas—Court of Federal Claims Number 02–0599V
268. Linda and Jesse Cortez on behalf of Tyler Joseph Cortez, Euless, Texas—Court of Federal Claims Number 02–0600V
269. Vicky and Scott Truett on behalf of Chance Scott McDowell Truett, Richmond, Kentucky—Court of Federal Claims Number 02–0601V
270. Thomas Bush and Millie Hernandez-Becker on behalf of John Charles Bush, Mount Kisco, New York—Court of Federal Claims Number 02–0602V
271. Shana and Chris Wiehebrink on behalf of Christopher Michael Wiehebrink, Louisville, Kentucky—Court of Federal Claims Number 02–0603V
272. Lisa and Christos Nantsis on behalf of Nikolaos Constantinou Nantsis, New York, New York—Court of Federal Claims Number 02–0605V
273. Amy Wolford on behalf of Abigail Rose Wolford, Point Pleasant, West Virginia—Court of Federal Claims Number 02–0606V
274. Elizabeth Neves on behalf of Sierra Neves, Houston, Texas—Court of Federal Claims Number 02–0607V
275. Frank Hernandez and Joanna Walker on behalf of James Alexander Hernandez, Temple, Texas—Court of Federal Claims Number 02–0608V
276. Sequita Pomales on behalf of Malik Keron Goodson, Cleveland, Ohio—Court of Federal Claims Number 02–0609V
277. Carla and Bruce Posner on behalf of Cameron Ian Posner, New York, New York—Court of Federal Claims Number 02–0610V
278. Juliette and Jesse Humenik on behalf of Joshua James Humenik, Burnsville, Minnesota—Court of Federal Claims Number 02–0611V
279. Darci Geisler on behalf of Dylan Alexander Villa, McKinney, Texas—Court of Federal Claims Number 02–0612V
280. Cynthia and Ricky Powell on behalf of Katerina E. Powell, Nashville, Tennessee—Court of Federal Claims Number 02–0613V
281. Candice Echols on behalf of Miguel Devonte Echols, Memphis, Tennessee—Court of Federal Claims Number 02–0614V
282. Hamoyoun Mohammadi and Mahshid Bazarguh on behalf of Keivan Mohammadi, Temple, Texas—Court of Federal Claims Number 02–0615V
283. Lisa and Shayne Anthony on behalf of Dalton Cayne Anthony, Mesquite, Texas—Court of Federal Claims Number 02–0616V
284. Monique Allen on behalf of Tahmir Khalil Curry, Philadelphia, Pennsylvania—Court of Federal Claims Number 02–0617
285. Lori and Frank Bell on behalf of Jacob Eugene Bell, Scranton, Pennsylvania—Court of Federal Claims Number 02–0618
286. Velia and Bill Pounds on behalf of William Josue Pounds, Casa Grande, Arizona—Court of Federal Claims Number 02–0619
287. Michele and Michael Anderson on behalf of Taylor Timothy Anderson, Minneapolis, Minnesota—Court of Federal Claims Number 02–0620
288. Lisa and David Branch on behalf of Christian John Branch, Glendora, California—Court of Federal Claims Number 02–0621
289. Daron Jones and Heather Berg on behalf of Ysanna Patricia Jones, Harris, New York—Court of Federal Claims Number 02–0622
290. Mary and Joseph Roche on behalf of Christian Joseph Roche, West Islip, New York—Court of Federal Claims Number 02–0623
291. Kristi Elliott on behalf of Kristopher Kevon Lofton, Saint Louis, Missouri—Court of Federal Claims Number 02–0625V
292. Joann Smoot on behalf of Dameyung Daunta Goodwin, Demopolis, Alabama—Court of Federal Claims Number 02–0626V

293. Elizabeth and Steven Kovach on behalf of Steven John Kovach, Jr., Edison, New Jersey—Court of Federal Claims Number 02–0627V
294. Gina and Bart Boulware on behalf of Hayden Fisher Boulware, Dallas, Texas—Court of Federal Claims Number 02–0628V
295. Suzanne and Eric Mandell on behalf of Alexander Tomas Mandell, Burbank, California—Court of Federal Claims Number 02–0630V
296. Amie and Shane Thomas on behalf of Benjamin Andrew Thomas, Berkley, West Virginia—Court of Federal Claims Number 02–0631V
297. John Bartold and Christina Karl on behalf of Julian Jerome Bartold, Burlington, Vermont—Court of Federal Claims Number 02–0632V
298. Jeanne and Dardy Pierre on behalf of Nadira Pierre, Hollywood, Florida—Court of Federal Claims Number 02–0633V
299. Lisa and Michael Smith on behalf of Nicolette Luann Smith, Los Angeles, California—Court of Federal Claims Number 02–0634V
300. Leslie and Douglas Mann on behalf of Michael Vincent Mann, Augusta, Georgia—Court of Federal Claims Number 02–0637V
301. Leslie and Douglas Mann on behalf of Aidan Richard Mann Augusta, Georgia—Court of Federal Claims Number 02–0638V
302. Leslie and Douglas Mann on behalf of Alex Reiner Mann, Augusta, Georgia—Court of Federal Claims Number 02–0639V
303. Frank Rosaschi on behalf of David Rosaschi, Irving, Texas—Court of Federal Claims Number 02–0640V
304. Danielle and Jeff Bates on behalf of Noelle Louise Bates, Cincinnati, Ohio—Court of Federal Claims Number 02–0641V
305. Euridice and Joseph Busweiller on behalf of Christina Marie, Busweiller, West Islip, New York—Court of Federal Claims Number 02–0642V
306. Darlene and Nicholas Downes on behalf of Sean Andrew Downes, Teaneck, New Jersey—Court of Federal Claims Number 02–0643V
307. Aleuba Bowens on behalf of Zezani Amani Bowens, Brooklyn, New York—Court of Federal Claims Number 02–0644V
308. Shandel and Jason Lewis on behalf of Hunter Michael Lewis, Redlands, California—Court of Federal Claims Number 02–0645V
309. Tracey Tindle Mullenax on behalf of Dakota McGuire Tindle-Maples, San Antonio, Texas—Court of Federal Claims Number 02–0646V
310. Emad and Ruba Abu-Goush on behalf of Samy Abu-Goush, Bedford, Texas—Court of Federal Claims Number 02–0647V
311. Lisa and David Turner on behalf of Kenneth Joseph Turner, Towson, Maryland—Court of Federal Claims Number 02–0648V
312. Veronica and Nathan Yates on behalf of Nature Divine Yates, Woodbury, New Jersey—Court of Federal Claims Number 02–0649V
313. Penelope Parker on behalf of Patricia Anne Mervine Parker, Pasadena, Maryland—Court of Federal Claims Number 02–0650V
314. Michelle and Willie Cahoon on behalf of Tristan Nathaniel Cahoon, Akron, Ohio—Court of Federal Claims Number 02–0651V
315. Deborah and Russell Kunze on behalf of Nicholas Jacob Kunze, Stillwater, Minnesota—Court of Federal Claims Number 02–0652V
316. Jimmela Richardson on behalf of Bryan Vincent Varnado, Los Angeles, California—Court of Federal Claims Number 02–0653V
317. Janel and Brian Payette on behalf of Jaxson Brian James Ebert, Hibbing, Minnesota—Court of Federal Claims Number 02–0654V
318. Sheri and Cary Steffens on behalf of Donovan Luke Steffens, Saint Louis, Missouri—Court of Federal Claims Number 02–0655
319. Tammy and Clifton Irvan on behalf of Jennifer Paulette Irvan, Paducah, Kentucky—Court of Federal Claims Number 02–0656V
320. Demetria and Herma'n Nettles on behalf of Jedidi'ah Ja'van Nettles, Brewton, Alabama—Court of Federal Claims Number 02–0657V
321. Charles Carr and Colleen Boyle on behalf of Andrew John Carr, Philadelphia, Pennsylvania—Court of Federal Claims Number 02–0658V
322. Carol Ann and Thomas Jones on behalf of Zebulon Orion Jones, Elmira, New York—Court of Federal Claims Number 02–0659V
323. Holly Baker on behalf of Zachary Baker, Vienna, Virginia—Court of Federal Claims Number 02–0661V
324. Julie and Mark Cyr on behalf of Matthew Cyr, Manchester, New Hampshire—Court of Federal Claims Number 02–0662V
325. Cynthia Miller, Houston, Texas—Court of Federal Claims Number 02–0666VFP-1≤
326. James Nickelson, Rocklin, California—Court of Federal Claims Number 02–0667V
327. Julie Duffield on behalf of Michael Duffield, Salt Lake City, Utah—Court of Federal Claims Number 02–0668V
328. Tina and David Lane on behalf of Jarod Brady Lane, San Jose, California—Court of Federal Claims Number 02–0670V
329. Nataki Alexander on behalf of Adariuo Alexander, Birmingham, Alabama—Court of Federal Claims Number 02–0671V
330. Cynthia and Allen Joas on behalf of Alexander Jordan Joas, Racine, Wisconsin—Court of Federal Claims Number 02–0672V
331. Bridget and Leslie Sharp on behalf of Brandon Christian Sharp, Bullhead City, Arizona—Court of Federal Claims Number 02–0673V
332. Henry Hubbard and Chanel Page on behalf of Heaven Chanel Hubbard, New York, New York—Court of Federal Claims Number 02–0674V
333. Alonzo Jones and Denze Goddard on behalf of Xavier Jones, New York, New York—Court of Federal Claims Number 02–0675V
334. April Harrison on behalf of Jacob Sloan May, Logan, West Virginia—Court of Federal Claims Number 02–0676V
335. Janeth Rivera on behalf of Jovanny Gabriel, Philadelphia, Pennsylvania—Court of Federal Claims Number 02–0677V
336. Taishea Thompson on behalf of Jerrod Andre Thompson, Washington, D.C.—Court of Federal Claims Number 02–0679V
337. Angie and Jason Breshnahan on behalf of Matthew Joseph Breshnahan, Fargo, North Dakota—Court of Federal Claims Number 02–0680V
338. Chester Mitchell on behalf of Dion'te Lamont Lang, Centerville, Illinois—Court of Federal Claims Number 02–0681V
339. Nancy and Lawrence Munoz on behalf of Nicholas Aaron Munoz, Mesa, Arizona—Court of Federal Claims Number 02–0682V
340. Christiania Harmon on behalf of Brennden Dai'Jon Davis, Granada Hills, California—Court of Federal Claims Number 02–0683V
341. Teresa and Paul Helton on behalf of Caleb Anthony Helton, Mesa, Arizona—Court of Federal Claims Number 02–0684V
342. Theresa and Howard Lattimer on behalf of Marcus Christopher Johnson, Sayre, Pennsylvania—Court of Federal Claims Number 02–0685V
343. Amanda and Richard Colton on behalf of Nicholas Hunter Colton, Louisville, Kentucky—Court of Federal Claims Number 02–0686V
344. Maureen and Howard Stevenson on behalf of Alex Edward Stevenson, Merrillville, Indiana—Court of Federal Claims Number 02–0687V
345. Lisa and Raymond Barker on behalf of Aden Neal Barker, Seattle, Washington—Court of Federal Claims Number 02–0688V
346. Jennifer and Matthew Eubanks on behalf of John Matthew Eubanks, Maywood, Illinois—Court of Federal Claims Number 02–0690V
347. Angela Nelson on behalf of Brandon Nicholas Nelson, Silver Spring, Maryland—Court of Federal Claims Number 02–0691V
348. Kennith Hackler on behalf of Cade Hackler, Boston, Massachusetts—Court of Federal Claims Number 02–0693V
349. Marlene Cox on behalf of Jordan Cox, Boston, Massachusetts—Court of Federal Claims Number 02–0694V
350. Stanley Siror on behalf of Brian Siror, Boston, Massachusetts—Court of Federal Claims Number 02–0695V
351. Jody and Roger Wetzel on behalf of Ryan Wetzel, Vienna, Virginia—Court of Federal Claims Number 02–0697V
352. Judy Herbsleb on behalf of Drew Herbsleb; Vienna, Virginia—Court of Federal Claims Number 02–0698V
353. Kely Taylor on behalf of James P. Taylor, Vienna, Virginia—Court of Federal Claims Number 02–0699V 4.
354. Ann and Mark Griswold on behalf of Vladimir Griswold, Vienna, Virginia—Court of Federal Claims Number 02–0700V
355. John Haverty on behalf of Carli Haverty, Vienna, Virginia—Court of Federal Claims Number 02–0701V
356. Kelly A. Myers, Martins Ferry, Ohio—Court of Federal Claims Number 02–0710V
357. Diane Parker, Crown Point, Indiana—Court of Federal Claims Number 02–0715V
358. Lelia and Jeff Wright on behalf of Randy Wright, Jackson, Michigan—Court of Federal Claims Number 02–0717V
359. Sharon Kask on behalf of Erica Kask, Lowell, Massachusetts—Court of Federal Claims Number 02–0719V
360. Gopinatha McAlpine, Honolulu, Hawaii—Court of Federal Claims Number 02–0720V

361. Monique Sattler on behalf of Jack Sattler, Vienna, Virginia—Court of Federal Claims Number 02–0723V
362. R. Darrell Weaver on behalf of Ashley Weaver, Vienna, Virginia—Court of Federal Claims Number 02–0724V
363. Robert Hayman on behalf of Nora Hayman, Vienna, Virginia—Court of Federal Claims Number 02–0725V
364. Bethany and John Padgett on behalf of Taylor Grace Padgett, Vienna, Virginia—Court of Federal Claims Number 02–0726V
365. Jodi Hansen on behalf of Dayton Hansen, Vienna, Virginia—Court of Federal Claims Number 02–0727V
366. Katie Thomason on behalf of Daniel Thomason, Vienna, Virginia—Court of Federal Claims Number 02–0728V
367. Wendy Heiberg on behalf of Scott Heiberg, Boston, Massachusetts—Court of Federal Claims Number 02–0729V
368. Joann Sworan on behalf of Charles Kowalewski, Boston, Massachusetts—Court of Federal Claims Number 02–0731V
369. Kenneth Banks on behalf of Bailey Banks, Macon, Georgia—Court of Federal Claims Number 02–0738V
370. Kelle Miller on behalf of Skylar Miller, Boston, Massachusetts—Court of Federal Claims Number 02–0739V
371. Susan Fredge on behalf of Samuel Fredge, Boston, Massachusetts—Court of Federal Claims Number 02–0740V
372. Leigh Foutch on behalf of Lauren Foutch, Boston, Massachusetts—Court of Federal Claims Number 02–0741V
373. Ping Li on behalf of Victor Chang, Boston, Massachusetts—Court of Federal Claims Number 02–0742V
374. Maria Socorro Gonzalez on behalf of Josman Gonzalez, Boston, Massachusetts—Court of Federal Claims Number 02–0743V
375. Tameka Montalvo on behalf of Marcello Vanino, Reading, Pennsylvania—Court of Federal Claims Number 02–0744V
376. Amy and Anthony Accardo on behalf of Nicholas Accardo, Dallas, Texas—Court of Federal Claims Number 02–0745V
377. Carla Russell on behalf of Cartre Michael Russell, Andalusia, Alabama—Court of Federal Claims Number 02–0747V
378. Michline and Samer Diab on behalf of Joseph Diab, San Bernadino, California—Court of Federal Claims Number 02–0748V

Dated: September 12, 2002.

**Elizabeth M. Duke,**

*Administrator.*

[FR Doc. 02–23796 Filed 9–18–02; 8:45 am]

**BILLING CODE 4165–15–P**

## DEPARTMENT OF HOUSING AND URBAN DEVELOPMENT

**[Docket No. FR–4734–N–45]**

## Notice of Submission of Proposed Information Collection to OMB; Multifamily Financial Management Template

**AGENCY:** Office of the Chief Information Officer, HUD.

**ACTION:** Notice.

**SUMMARY:** The proposed collection requirement described below has been submitted to the Office of Management and Budget (OMB) for review, as required by the Paperwork Reduction Act. The Department is soliciting public comments on the subject proposal.

**DATES:** *Comments Due Date:* October 21, 2002.

**ADDRESSES:** Interested persons are invited to submit comments regarding this proposal. Comments should refer to the proposal by name and should be sent to: Lauren Wittenberg, OMB Desk Officer, Office of Management and Budget, Room 10235, New Executive Office Building, Washington, DC 20503; Fax number (202) 395–6974; E-mail *Lauren_Wittenberg@omb.eop.gov*.

**FOR FURTHER INFORMATION CONTACT:** Wayne Eddins, Reports Management Officer, QDAM, Department of Housing and Urban Development, 451 Seventh Street, Southwest, Washington, DC 20410; e-mail *Wayne_Eddins@HUD.gov*; telephone (202) 708–2374. This is not a toll-free number. Copies of the proposed forms and other available documents submitted to OMB may be obtained from Mr. Eddins.

**SUPPLEMENTARY INFORMATION:** The Department has submitted the proposal for the collection of information, as described below, to OMB for review, as required by the Paperwork Reduction Act (44 U.S.C. Chapter 35). The Notice lists the following information: (1) The title of information collection proposal; (2) the office of the agency to collect the information; (3) the OMB approval number, if applicable; (4) the description of the need for the information and its proposed use; (5) the agency form number, if applicable; (6) what members of the public will be affected by the proposal; (7) how frequently information submissions will be required; (8) an estimate of the total number of hours needed to prepare the information submission including number of respondents, frequency of response, and hours of response; (9) whether the proposal is new, an extension, reinstatement, or revision of an information collection requirement; and (10) the name and telephone number of an agency official familiar with the proposal and of the OMB Desk Officer for the Department.

This Notice also lists the following information:

*Title of Proposal:* Multifamily Financial Management Template.

*OMB Approval Number:* 2502—pending OMB approval.

*Form Numbers:* None.

*Description of the Need for the Information and Its Proposed Use:* The Uniform Financial Reporting Standards (UFRS) regulations requires HUD's multifamily housing program participants to submit financial data electronically, using the Generally Accepted Accounting Principles (GAAP), in a prescribed format. Electronic submissions of this data will require the use of a template. This information was previously collected with the Public Housing Financial Management Template approved under OMB control number 2535–0107.

*Respondents:* Individuals or households, Business or other for-profit, Not-for-profit institutions, Federal Government.

*Frequency of Submission:* On occasion.

| | Number of respondents | × | Annual responses | × | Hours per response | = | Burden hours |
|---|---|---|---|---|---|---|---|
| Reporting Burden | 20,774 | | 1 | | 2.5 | | 53,784 |

*Total Estimated Burden Hours:* 53,784.

*Status:* Extension of a currently approved collection under a new approval number. Submitted as a new collection.

**Authority:** Section 3507 of the Paperwork Reduction Act of 1995, 44 U.S.C. 35, as amended.

Dated: September 11, 2002.

**Wayne Eddins,**

*Departmental Reports Management Officer, Office of the Chief Information Officer.*

[FR Doc. 02–23760 Filed 9–18–02; 8:45 am]

**BILLING CODE 4210–72–M**

## DEPARTMENT OF HOUSING AND URBAN DEVELOPMENT

**[Docket No. FR–4734–N–46]**

### Notice of Submission of Proposed Information Collection to OMB; Builder's Certification/Guarantee and New Construction Subterranean Termite Soil Treatment Record

**AGENCY:** Office of the Chief Information Officer, HUD.

**ACTION:** Notice.

**SUMMARY:** The proposed information collection requirement described below has been submitted to the Office of Management and Budget (OMB( for review, as required by the Paperwork Reduction Act. The Department is soliciting public comments on the subject proposal.

**DATES:** *Comments Due Date:* October 21, 2002.

**ADDRESSES:** Interested persons are invited to submit comments regarding this proposal. Comments should refer to the proposal by name and/or OMB approval number (2502–0525) and should be sent to: Lauren Wittenburg, OMB Desk Officer, Office of Management and Budget, Room 10235, New Executive Office Building, Washington, DC 20503; Fax number (202) 395–6974; E-mail *Lauren_Wittenberg@omb.eop.gov.*

**FOR FURTHER INFORMATION CONTACT:** Wayne Eddins, Reports Management Officer, QDAM, Department of Housing and Urban Development, 451 Seventh Street, Southwest, Washington, DC 20410; e-mail *Wayne_Eddins@HUD.gov;* telephone (202) 708–2374. This is not a toll-free number. Copies of the proposed forms and other available documents submitted to OMB may be obtained from Mr. Eddins.

**SUPPLEMENTARY INFORMATION:** The Department has submitted the proposal for the collection of information, as described below, to OMB for review, as required by the Paperwork Reduction Act (44 U.S.C. Chapter 35). The Notice lists the following information: (1) The title of the information collection proposal; (2) the office of the agency to collect the information; (3) the OMB approval number, if applicable; (4) the description of the need for the information and its proposed use; (5) the agency form number, if applicable; (6) what members of the public will be affected by the proposal; (7) how frequently information submissions will be required; (8) an estimate of the total number of hours needed to prepare the information submission including number of respondents, frequency of response, and hours of response; (9) whether the proposal is new, an extension, reinstatement, or revision of an information collection requirement; and (10) the name and telephone number of an agency official familiar with the proposal and of the OMB Desk Officer for the Department.

This Notice also lists the following information:

*Title of Proposal:* Builder's Certification/Guarantee and New Construction Subterranean Termite Soil Treatment Record.

*OMB Approval Number:* 2502–0525.

*Form Numbers:* HUD–NPCA–99–A and HUD–NPCA–99–B.

*Description of the Need for the Information and its Proposed Use:* Builders certify HUD insured structures are free of termite hazards. An authorized pest control company must perform treatments for termites. The builder guarantees the treated area against infestation for one year.

*Respondents:* Individuals or households, Business or other for-profit, Not-for-profit institutions, Federal Government.

*Frequency of Submission:* On Occasion.

| | Number of respondents | × | Annual responses | × | Hours per response | = | Burden hours |
|---|---|---|---|---|---|---|---|
| Reporting Burden | 54,000 | | 1 | | 0.16 | | 8,964 |

*Total Estimated Burden Hours:* 8,964.

*Status:* Extension of a currently approved collection.

**Authority:** Section 3507 of the Paperwork Reduction Act of 1995, 44 U.S.C. 35, as amended.

Dated: September 12, 2002.

**Wayne Eddins,**

*Departmental Reports Management Officer, Office of the Chief Information Officer.*

[FR Doc. 02–23761 Filed 9–18–02; 8:45 am]

**BILLING CODE 4210–72–M**

## DEPARTMENT OF THE INTERIOR

### Office of the Secretary

### Meeting of the U.S. Coral Reef Task Force

**TIME AND DATE:** 9 a.m. to 5 p.m. EST, October 2 and 3, 2002.

**PLACE:** Las Olas Room, Caribe Hilton Hotel, San Juan, Puerto Rico.

**STATUS:** The Department of the Interior, as co-chair with the Department of Commerce, on behalf of the U.S. Coral Reef Task Force (CRTF), announces a public meeting of the Task Force. Composed of the heads of eleven federal agencies and the Governors of seven states, territories, and commonwealths, the Task Force has helped lead U.S. efforts to address the coral reef crisis and sustainably manage the nation's valuable coral reef ecosystems.

**MATTERS TO BE CONSIDERED:** The CRTF will discuss implementation of the National Plan for Coral Reef Conservation Action, honor local organizations, and accept public comments. The agenda will be available from the contact persons below and published on the web at *http://coralreef.gov/* when finalized.

Individuals and organizations will have opportunities to register for exhibit space and register to provide public comments limited to less that 5 minutes. Wherever possible, those with similar viewpoints or messages are encouraged to make joint statements. Testimony may be in English or Spanish, and will be received on the afternoon of October 2. Written statements may also be submitted to the Task Force up to October 10, 2002.

**CONTACT PERSON FOR MORE INFORMATION:** Organizations and individuals based outside of Puerto Rico desiring to register for public comments or to obtain additional information should contact the CRTF meeting office, c/o the Assistant Secretary for Fish and Wildlife Parks, Department of the Interior, 1849 C Street NW, MS–MIB–3156, Attn: CRTF, Washington, DC 20240, telephone 202–208–6211, e-mail *CRTF@ios.doi.gov.* Organizations or individuals in Puerto Rico should contact Ms. Astrid Green at the Community Affairs Division, Department of Natural Resources, telephone 787–724–8773/8774 x2258.

Dated: September 12, 2002.

**Paul Hoffman,**

*Deputy Assistant Secretary for Fish and Wildlife and Parks.*

[FR Doc. 02–23772 Filed 9–18–02; 8:45 am]

**BILLING CODE 4310–55–P**

## DEPARTMENT OF THE INTERIOR

### Fish and Wildlife Service

### Information Collections Submitted to the Office of Management and Budget for Approval Under the Paperwork Reduction Act

**AGENCY:** Fish and Wildlife Service, Interior.

**ACTION:** Notice of information collection; request for comments.

**SUMMARY:** The collection of information described below has been submitted to the Office of Management and Budget (OMB) for approval under the provisions of the Paperwork Reduction Act of 1995. Copies of the specific information collection requirements, related forms and explanatory material may be obtained by contacting the Service Information Collection Clearance Officer at the address provided below.

**DATES:** Consideration will be given to all comments received on or before October 21, 2002. The 60-day notice was published in the **Federal Register** on April 30, 2002 (67 FR 21268). No comments were received during the 60-day comment period that ended on July 1, 2002.

**ADDRESSES:** Send your comments and/or suggestions on the requirement to the Office of Management and Budget, Office of Information and Regulatory Affairs, Attention: Department of the Interior Desk Officer, 725—17th Street, NW, Washington, DC 20503, with a copy to Anissa Craghead, Service Information Collection Clearance Officer, U.S. Fish and Wildlife Service, MS 222—ARLSQ, 1849 C Street, NW., Washington, DC 20240, telephone number 703.358.2445.

**FOR FURTHER INFORMATION CONTACT:** To request a copy of the information collection request, explanatory information and related forms, contact Anissa Craghead at 703.358.2445, or electronically to *anissa_craghead@fws.gov.* For information related to the grant program, which is the subject of the information collection, please log onto *http://birdhabitat.fws.gov.*

**SUPPLEMENTARY INFORMATION:** The OMB regulations at 5 CFR part 1320, which implement provisions of the Paperwork Reduction Act of 1995 (Pub. L. 104–13), require that interested members of the public and affected agencies have an opportunity to comment on information collection and recordkeeping activities (*see* 5 CFR 1320.8(d)). On Friday, December 21, 2001, the U.S. Fish and Wildlife Service (Service) was given emergency approval by OMB for collection of information in order to quickly implement the grant program being conducted under the Neotropical Migratory Bird Conservation Act (Pub. L. 106–247). The assigned OMB information collection control number is 1018–0113, and the first temporary approval expired June 30, 2002. On June 30, 2002, an extension of the approval expiration was granted to end on September 30, 2002. The Service is requesting a three-year term of approval for this information collection activity. An agency may not conduct or sponsor, and a person is not required to respond to, a collection of information unless it displays a currently valid OMB control number.

Comments are invited on: (1) Whether the collection of information is necessary for the proper performance of the functions of the agency, including whether the information will have practical utility; (2) the accuracy of the agency's estimate of the burden of the collection of information; (3) ways to enhance the quality, utility and clarity of the information to be collected; and, (4) ways to minimize the burden of the collection of information on respondents.

*Title:* Information Collection In Support of Grant Programs Authorized by the Neotropical Migratory Bird Conservation Act of 2000 (NMBCA).

*Approval Number:* 1018–0113.

*Service Form Number(s):* N/A.

*Description and Use:* The purposes of the Neotropical Migratory Bird Conservation Act (Act) are to: (1) Perpetuate healthy populations of neotropical migratory birds; (2) assist in the conservation of these birds by supporting conservation initiatives in the United States, Latin America, and the Caribbean; and (3) provide financial resources and foster international cooperation for those initiatives.

The Act authorizes $5 million for this program, and Congress appropriated $3 million for Fiscal Year 2002. At a minimum, 75% of this money will be available for projects outside the United States. No maximum request has been established. The match ratio is 3:1, calculated in U.S. dollars. That is, every grant dollar requested under the Act must be matched by 3 partner dollars. U.S.-Federal funds may be used to support projects, but may not be used as match. Partner funds for U.S. projects must be in cash, whereas funds for projects in Latin America and the Caribbean may be cash or in-kind contribution.

Projects may be located in the United States and in all countries of Latin America and the Caribbean, with the exception of Cuba. Projects in Canada are not eligible for this funding. An applicant may be an individual, corporation, partnership, trust, association, other private entity, government agency in the U.S. or a foreign country, or an international organization.

The Act describes activities which may be carried out, including: protection and management of neotropical migratory bird populations; maintenance, management, protection and restoration of neotropical migratory bird habitat; research and monitoring; law enforcement; and community outreach and education.

The Act authorizes the Secretary of the Interior, who has principal responsibility for implementation, to convene an advisory group consisting of individuals representing public and private organizations actively involved in the conservation of neotropical migratory birds to assist with and provide advice on proposal funding. The Federal Advisory Committee Act provisions do not apply to this advisory group.

Competing for grant funds involves applications from partnerships that describe in substantial detail project locations and other characteristics. The grant program, *i.e.*, competition for funds, for this Act is currently being implemented by the Division of Bird Habitat Conservation, U.S. Fish and Wildlife Service, which is publishing and distributing instructional materials that assist the applicants in formulating project proposals for advisory group consideration. The instructional booklets and other instruments, *e.g.*, **Federal Register** notices on request for proposals, are the basis for this information collection request for OMB clearance. Information collected under this program is used to respond to such needs as: audits, program planning and management, program evaluation, Government Performance and Results Act reporting, Standard Form 424 (Application For Federal Assistance), grant agreements, budget reports and justifications, public and private requests for information, data provided to other programs for databases on similar programs, Congressional inquiries and reports required by NMBCA, *etc.*

In summary, information collection under these programs is required to obtain a benefit, *i.e.*, a cash reimbursable grant that is given competitively to some applicants based on eligibility and relative scale of resource values involved in the projects. The information collection is subject to the Paperwork Reduction Act

requirements for such activity, which includes soliciting comments from the general public regarding the nature and burden imposed by the collection.

*Frequency of Collection:* Occasional. The Neotropical Migratory Bird Conservation Act grant program currently has one project proposal submissions window per year.

*Description of Respondents:* Households and/or individuals; business and/or other for-profit; not-for-profit institutions; farms; Federal Government; and State, local and/or Tribal governments.

*Estimated Completion Time:* The reporting burden, or time involved in writing project proposals, is estimated to be 40 hours.

*Number of Respondents:* It is estimated that approximately 200 proposals will be submitted each year for the Neotropical Migratory Bird Conservation Act grant program.

Dated: July 16, 2002.

**Marshall P. Jones,**

*Acting Director, Fish and Wildlife Service.*

[FR Doc. 02–23843 Filed 9–18–02; 8:45 am]

**BILLING CODE 4310–55–P**

---

## DEPARTMENT OF THE INTERIOR

### Fish and Wildlife Service

### Information Collections Submitted to the Office of Management and Budget for Approval Under the Paperwork Reduction Act

**AGENCY:** Fish and Wildlife Service, Interior.

**ACTION:** Notice of information collection; request for comments.

**SUMMARY:** The U.S. Fish and Wildlife Service (Service) has submitted the material described below to the Office of Management and Budget (OMB) for approval under the provisions of the Paperwork Reduction Act of 1995. Copies of the specific information requirements, related forms and explanatory material may be obtained by contacting the Service Information Collection Clearance Officer at the address provided below.

**DATES:** We will consider all comments received on or before October 21, 2002. The 60-day notice was published in the **Federal Register** on April 23, 2002 (67 FR 19771). No comments were received during the 60-day period.

**ADDRESSES:** Send your comments and/or suggestions on the requirement to the Office of Management and Budget, Office of Information and Regulatory Affairs, Attention: Department of the Interior Desk Officer, 725—17th Street, NW., Washington, DC 20503, with a copy to Anissa Craghead, Service Information Collection Clearance Officer, U.S. Fish and Wildlife Service, MS 222—ARLSQ, 1849 C Street, NW., Washington, DC 20240; telephone number 703.358.2445.

**FOR FURTHER INFORMATION CONTACT:** To receive a copy of the information collection request, explanatory information and related forms, contact Anissa Craghead at 703.358.2445, or electronically to *anissa_craghead@fws.gov.*

**SUPPLEMENTARY INFORMATION:** The OMB regulations at 5 CFR part 1320, which implement provisions of the Paperwork Reduction Act of 1995 (Pub. L. 104–13), require that interested members of the public and affected agencies have an opportunity to comment on information collection and recordkeeping activities (*see* 5 CFR 1320.8(d)). We are seeking a renewal of clearance from the OMB to collect information in conjunction with the Evaluation Grants Program to be conducted under the North American Wetlands Conservation Act (NAWCA) (Pub. L. 101–233, as amended; December 13, 1989). The assigned OMB information collection control number is 1018–0104 and approval will expire on September 30, 2002.

Section 19 of NAWCA (Assessment of Progress in Wetlands Conservation), requires the Secretary of the Interior, in cooperation with the North American Wetlands Conservation Council, to: ''* * * (1) develop and implement a strategy to assist in the implementation of this Act in conserving the full complement of North American wetlands systems and species dependent on those systems, that incorporates information existing on the date of the issuance of the strategy in final form on types of wetlands habitats and species dependent on the habitats; and (2) develop and implement procedures to monitor and evaluate the effectiveness of wetlands conservation projects completed under this Act.'' To meet this requirement, we are continuing the Evaluation Grants Program initiative that requires selected prospective grantees to submit pre-proposals and proposals that are geared specifically to project approaches that will readily provide data for monitoring and evaluation purposes. Current NAWCA projects do not, and cannot, provide the data and information necessary to meet the monitoring and evaluation requirements of Section 19. We have available, upon request, updated supporting evaluation grants guidelines, or instructions, that will provide the basis for information collection and this request. We also have available for review and comment the original ''Strategy For Implementing and Evaluating the Effectiveness of Wetland Conservation Projects Completed Under the NAWCA'' (Sect. 19, part (1)) and the ''NAWCA Evaluation Grant Proposal Development and Review'' outline (Sect. 19, part (2)). Both of these documents are approved by the NAWCA Council and have been used to develop the guidelines. The Service is requesting a 3-year term of re-approval for this information collection activity. An agency may not conduct or sponsor, and a person is not required to respond to, a collection of information unless it displays a currently valid OMB control number.

We invite your comments on: (1) Whether the collection of information is necessary for the proper performance of the functions of the agency, including whether the information will have practical utility; (2) the accuracy of the agency's estimate of the burden of the collection of information; (3) ways to enhance the quality, utility and clarity of the information to be collected; and, (4) ways to minimize the burden of the collection of information on respondents.

*Title:* Information Collection In Support of Grant Programs Authorized by the North American Wetlands Conservation Act of 1989 (NAWCA).

*Approval Number:* 1018–0104. Initial OMB approval was granted September 30, 1999.

*Service Form Number(s):* N/A.

*Description and Use:* The North American Waterfowl Management Plan (NAWMP), first signed in 1986, is a tripartite agreement among Canada, Mexico and the United States to enhance, restore and otherwise protect continental wetlands to benefit waterfowl and other wetland associated wildlife through partnerships between and among the private and public sectors. Because the 1986 NAWMP did not carry with it a mechanism to provide for broadly-based and sustained financial support for wetland conservation activities, Congress passed and the President signed into law the NAWCA to partially fill that funding need. The purpose of NAWCA is to use partnerships to promote long-term conservation of North American wetland ecosystems and the waterfowl and other migratory birds, fish and wildlife that depend upon such habitat. Principal conservation actions supported by NAWCA are acquisition, enhancement and restoration of wetlands and wetlands-associated habitat.

As well as providing for a continuing and stable funding base, NAWCA establishes an administrative body, *i.e.*, Council, made up of a State representative from each of the four Flyways, three representatives from wetlands conservation organizations, the Secretary of the Board of the National Fish and Wildlife Foundation, and the Director of the Service. This North American Wetlands Conservation Council is exempt from the requirements of Public Law 92–463 (Federal Advisory Committee Act). The purpose of the Council is to recommend wetlands conservation project proposals to the Migratory Bird Conservation Commission (MBCC) for funding.

Subsection (c) of Section 5 (Council Procedures) provides that the ''* * * Council shall establish practices and procedures for the carrying out of its functions under subsections (a) and (b) of this section * * *,'' which are consideration of projects and recommendations to the MBCC, respectively. The means by which the Council decides which project proposals are important to recommend to the MBCC is through grants programs that are coordinated through the Council Coordinator's office (Division of Bird Habitat Conservation) within the Service.

Applications from partnerships competing for regular grant program funds must describe in substantial detail project locations and other characteristics that will meet standards established by the Council and requirements of NAWCA. The Evaluation Grants Program differs in that it provides a two-stage process wherein successful applicants will have submitted both a pre-proposal and a proposal. Pre-proposals are intended to allow screening such that only the projects that have the greatest potential for contributing to the evaluation program will be continued into the proposal stage. The Council Coordinator's office currently publishes and distributes Standard and Small Grants instructional booklets that assist applicants in formulating project proposals for Council consideration. The guidelines for the grants evaluation program, to be contained in the request for proposal, is an additional information collection instrument. The guidelines and instructions and other instruments, *e.g.*, **Federal Register** notices on request for proposals, are the basis for this information collection request for OMB clearance. Information collected under this program is used to respond to such needs as: audits, program planning and management, program evaluation, Government Performance and Results Act reporting, Standard Form 424 (Application For Federal Assistance), grant agreements, budget reports and justifications, public and private requests for information, data provided to other programs for databases on similar programs, Congressional inquiries and reports required by NAWCA, *etc.* In the case of the additional Evaluation Grants Program guidelines, the request responds also to the statutory requirements of the Act.

In summary, information collection under this program is required to obtain a benefit, *i.e.*, a cash reimbursable grant that will be given competitively to selected applicants based on eligibility and the relative value of their projects to contribute to meaningful technical evaluation of the success of the grants programs. The information collection is subject to the Paperwork Reduction Act requirements for such activity, which includes soliciting comments from the general public regarding the nature and burden imposed by the collection.

*Frequency of Collection:* Occasional. We intend the Evaluation Grant Program to have one project proposal submissions window per year.

*Description of Respondents:* Households and/or individuals; business and/or other for-profit; not-for-profit institutions; farms; Federal Government; and State, local and/or Tribal governments.

*Estimated Completion Time:* We estimate the reporting burden, or time involved in writing project submissions, to be 8 hours for a pre-proposal and 40 hours for a proposal.

*Number of Respondents:* We estimate that 30 pre-proposals and 10 proposals will be submitted each year for the grants evaluation program.

Dated: July 16, 2002.

**Marshall P. Jones,**

*Acting Director, Fish and Wildlife Service.*

[FR Doc. 02–23844 Filed 9–18–02; 8:45 am]

**BILLING CODE 4310–55–P**

---

## DEPARTMENT OF THE INTERIOR

### Fish and Wildlife Service

### Availability of a Draft Environmental Assessment (EA) for the Grand-White Lakes Land Bridge Protection Project, Cameron Parish, LA

**AGENCY:** Fish and Wildlife Service, Interior.

**ACTION:** Notice.

The Service announces the availability of the draft EA for the Grand-White Lakes Land Bridge Protection Project. A more detailed description of the project is outlined in the **SUPPLEMENTARY INFORMATION** section below. A copy of the draft EA may be obtained by sending a written request to the Service's Louisiana Field Office (*see* **ADDRESSES**). Requests should be made in writing or can be obtained by calling Mr. Darryl Clark at 337/291–3100 or by fax at 337/291–3139. This notice is provided pursuant to NEPA regulations (40 CFR 1506.6).

The Service specifically requests information, views, and opinions from the public via this Notice on the Federal action, including the identification of any other aspects of the human environment not already identified in the Service's EA.

If you wish to comment, you may submit comments by any one of several methods. You may mail comments to the Service's Louisiana Field Office (*see* **ADDRESSES**). You also may comment via the internet to *Darryl_Clark@fws.gov.* Please submit comments over the internet as an ASCII file avoiding the use of special characters and any form of encryption. Please also include your name and return address in your internet message. If you do not receive a confirmation from the Service that we have received your internet message, contact us directly at the telephone numbers listed below (*see* **FOR FURTHER INFORMATION CONTACT**). Finally, you may hand deliver comments to the Service office listed below (*see* **ADDRESSES**). Our practice is to make comments, including names and home addresses of respondents, available for public review during regular business hours. Individual respondents may request that we withhold their home address from the administrative record. We will honor such requests to the extent allowable by law. There may also be circumstances in which we would withhold from the administrative record a respondent's identity, as allowable by law. If you wish us to withhold your name and address, you must state this prominently at the beginning of your comments. We will not, however, consider anonymous comments. We will make all submissions from organizations or businesses, and from individuals identifying themselves as representatives or officials of organizations or businesses, available for public inspection in their entirety.

**DATES:** Written comments on the draft EA should be sent to the Service's Louisiana Field Office (*see* **ADDRESSES**) and should be received on or before October 21, 2002.

**ADDRESSES:** Persons wishing to review the draft EA may obtain a copy by

writing to the Field Supervisor, U.S. Fish and Wildlife Service, 646 Cajundome Boulevard, Suite 400, Lafayette, Louisiana 70506. Documents will be available for public inspection by appointment during normal business hours at the Service's Louisiana Field Office (Attn: Darryl Clark). Written data or comments regarding the draft EA should be submitted to the Service's Louisiana Field Office. The data and comments must be submitted in writing to be adequately considered in the Service's decision-making process.

**FOR FURTHER INFORMATION CONTACT:** Mr. Darryl Clark, Senior Field Biologist, (*see* **ADDRESSES** above), telephone: 337/291–3111 or 337/291–3100, facsimile: 337/291–3139.

**SUPPLEMENTARY INFORMATION:** The Grand-White Lakes Land Bridge Protection Project is being funded through the Coastal Wetlands Planning, Protection and Restoration Act from the Tenth Priority Project List. The project purpose is to protect and facilitate the formation of marsh and submerged aquatic vegetation through the construction of a foreshore dike (with marsh creation) and earthen terraces, and by planting vegetation. The project is located in southwestern Louisiana in the southeastern portion of Grand Lake, approximately 15 miles northeast of Grand Chenier in Cameron Parish, Louisiana. The project area has experienced extensive marsh loss since the mid-1960s, with shoreline loss rates as high as 27 feet per year due mostly to elevated water levels produced by operation of water control structures for navigation and agricultural water supply purposes. The preferred alternative is to construct a foreshore dike, create marsh with dredged material from access channel construction, construct earthen terraces, and plant vegetation to protect and restore fresh marsh in the area and prevent the 17 mile-wide Grand Lake from eroding into Collicon Lake.

Dated: August 29, 2002.

**Sam D. Hamilton,**

*Regional Director, Southeastern Region.*

[FR Doc. 02–23794 Filed 9–18–02; 8:45 am]

**BILLING CODE 4310–55–P**

## DEPARTMENT OF THE INTERIOR

## Fish and Wildlife Service

## Notice of Availability of the Draft Joint Restoration Plan and Environmental Assessment for the Lower Fox River and Green Bay Area

**AGENCY:** Fish and Wildlife Service, Interior, lead; National Oceanic and Atmospheric Administration, Commerce, cooperating agency; Bureau of Indian Affairs, Interior, invited to be a cooperating agency, response pending.

**ACTION:** Notice of 30 day comment period.

**SUMMARY:** This notice advises the public and other agencies of the availability of the draft document titled ''Joint Restoration Plan and Environmental Assessment for the Lower Fox River and Green Bay Area'' (Plan) for public review and comment. Prior to implementing restoration projects Federal agencies are required to analyze alternatives to restore, rehabilitate, replace and/or acquire the equivalent of those natural resources injured and related services lost to the public associated with those resources. This analysis is contained in the Plan as required by the National Environmental Protection Act (NEPA) for the Federal action of restoration project implementation. This notice is provided pursuant to Natural Resource Damage Assessment and Restoration (NRDAR) regulations (43 CFR 11.81(d)(4)) and NEPA regulations (40 CFR 1506.6).

**DATES:** Written comments must be received on or before October 21, 2002.

**ADDRESSES:** Persons wishing to review the document may obtain copies by contacting: Colette S. Charbonneau, 1015 Challenger Court, Green Bay, Wisconsin 54311, Telephone: (920) 465–7407, Fax: (920) 465–7410, e-mail: *colette_charbonneau@fws.gov.* The document is also available at the following Internet address: *http://midwest.fws.gov/nepa/. See* **SUPPLEMENTARY INFORMATION** section for library addresses where copies may also be viewed.

**SUPPLEMENTARY INFORMATION:**

### Background

The U.S. Department of the Interior (represented by the U.S. Fish and Wildlife Service and the Bureau of Indian Affairs), U.S. Department of Commerce (represented by the National Oceanic and Atmospheric Administrations), Oneida Tribe of Indians of Wisconsin, Menominee Indian Tribe of Wisconsin, Wisconsin Department of Natural Resources and Michigan Attorney General (Trustees) are trustees for natural resources considered in this NRDAR project, pursuant to subpart G of the National Oil and Hazardous Substances Pollution Contingency Plan (40 CFR 300.600 and 300.610) and Executive Order 12580.

The Trustees have a Memorandum of Agreement which establishes a Trustee Council to develop and implement a restoration plan for ecological restorations in the Fox River Valley and Green Bay watershed. The Trustees followed the NRDAR regulations found at 43 CFR part 11 for the development of the Plan.

The draft Joint Restoration Plan and Environmental Assessment will be finalized prior to implementation after all public comments received during the public comment period are considered. Any significant additions or modifications to the Plan as restoration actions proceed will be made available for public review before any tasks called for in the addendum or modification are undertaken.

The objective of the NRDAR process in the Lower Fox River and Green Bay area is to compensate the public, through environmental restoration, for losses to natural resources that have been caused by historic releases of polychlorinated biphenyls (PCBs) into the environment. The Comprehensive Environmental Response, Compensation and Liability Act (CERCLA, more commonly known as the Federal ''Superfund'' law) [42 U.S.C. 9601, *et seq.*] and the Federal Water Pollution Control Act (commonly known as the Clean Water Act (CWA)) [33 U.S.C. 1251, *et seq.*] authorize states, federally recognized tribes, and certain Federal agencies that have authority to manage or control natural resources, to act as ''trustees'' on behalf of the public, to restore, rehabilitate, replace, and/or acquire natural resources equivalent to those harmed by release of hazardous substances. The Trustees have worked together, in a cooperative process, to determine appropriate restoration activities to address natural resource injuries caused by historic releases of PCBs into the Lower Fox River and Green Bay environment. The results of this administrative process are contained in a series of planning and decision documents that have been published for public review under CERCLA and the CWA. Natural resource damages received, either through negotiated settlements or adjudicated awards, must be used to restore, rehabilitate, replace and/or acquire the equivalent of those natural resources that have been injured. The Plan addresses the Trustees' overall approach

to restore, rehabilitate, replace or acquire the equivalent of natural resources injured by the release of PCBs into the Lower Fox River and Green Bay environment.

**Public Involvement**

Interested members of the public are invited to review and comment on the Plan. Copies can be requested from the address listed above. Comments on the Plan should be sent to the U.S. Fish and Wildlife Service at the address listed above. The U.S. Fish and Wildlife Service will provide copies of all comments to the other Trustees. All comments received from individuals become part of the official public record. Requests for such comments will be handled in accordance with the Freedom of Information Act and the Council on Environmental Quality's NEPA regulations (40 CFR 1506.6(f)). Our practice is to make comments, including names and home addresses of respondents, available for public review during regular business hours. Individual respondents may request that we withhold their home address from record, which we will honor to the extent allowable by law. If a respondent wishes us to withhold his/her name and/or address, this must be stated prominently at the beginning of the comment.

**Addresses**

In addition to obtaining a personal copy of the document at the address listed above, copies will also be available for onsite review at the Appleton Public Library, 225 North Oneida Street, Appleton, Wisconsin; Brown County Library, 515 Pine Street, Green Bay, Wisconsin; Door County Library, 104 South Fourth Avenue, Sturgeon Bay, Wisconsin; Oneida Community Library, 201 Elm Street, Oneida, Wisconsin; Oshkosh Public Library, 106 Washington Avenue, Oshkosh, Wisconsin; and the Escanaba Public Library, 400 Ludington Street, Escanaba, Michigan.

Dated: September 6, 2002.

**William F. Hartwig,**

*Regional Director, Region 3, Fort Snelling, MN.*

[FR Doc. 02–23787 Filed 9–18–02; 8:45 am]

BILLING CODE 4310–55–P

## DEPARTMENT OF THE INTERIOR

## Bureau of Indian Affairs

## Notice of Intent To Prepare a Programmatic Environmental Impact Statement for the Coeur d'Alene Tribe's Integrated Resource Management Plan, Coeur d'Alene Reservation, Plummer, ID

**AGENCY:** Bureau of Indian Affairs, Interior.

**ACTION:** Notice.

**SUMMARY:** This notice advises the public that the Bureau of Indian Affairs (BIA), with the cooperation of the Coeur d'Alene Tribe, intends to prepare a Programmatic Environmental Impact Statement (PEIS) for an Integrated Resource Management Plan (IRMP) for the approximately 345,000 acre Coeur d'Alene Indian Reservation, located within both Benewah and Kootenai Counties in the northern Idaho panhandle. Descriptions of this area and of the proposed action are provided in the **SUPPLEMENTARY INFORMATION** section. This notice also announces public scoping meetings for the content of the PEIS.

**DATES:** Comments on the scope of the PEIS/IRMP must arrive by October 18, 2002. The public scoping meetings will be held on Tuesday, October 8, 2002, and Wednesday, October 9, 2002, from 6 p.m. to 8 p.m.

**ADDRESSES:** You may mail or hand deliver written comments, or requests to be placed on the project mailing list, to Tiffany Allgood, Environmental Action Plan Coordinator, 850 A Street, P.O. Box 408, Plummer Idaho 83851. You may also comment via the Internet to *tallgood1@earthlink.net.* Please include your name and return address in Internet messages, and avoid the use of special characters or any form of encryption. If you do not receive a confirmation from the system that your Internet message has been received, contact Tiffany Algood at (208) 686–8802.

The October 8, 2002, public meeting will be held at the Tribal Wellness Center in Plummer, Idaho. The October 9, 2002, meeting will be held at the St. Maries Middle School in St. Maries, Idaho.

**FOR FURTHER INFORMATION CONTACT:** Tiffany Allgood, (208) 686–8802, or June Boynton, (503) 231–6749.

**SUPPLEMENTARY INFORMATION:** The Coeur d'Alene Indian Reservation is situated in an area that is rural in character, and includes portions of Lake Coeur d'Alene, the St. Joe River, Hangman Creek and other streams. Land on the reservation is comprised of trust lands, which are lands held in trust by the United States for the use and benefit of Indian tribes or individuals, and fee lands, which are lands held in fee simple status. Land use is mainly agriculture and forest, with a small amount of land used for cities and for commercial and subdivision developments. There are 6,451 people living on the Coeur d'Alene Reservation according to U.S. Census 2000.

The proposed action is to develop a Coeur d'Alene Tribal IRMP for natural and cultural resources. The tribe, in response to increasing population and accelerated development on the reservation, is developing this IRMP as it leads the reservation community in planning for a future that integrates development with maintenance and enhancement of natural and cultural resources. With input from an IRMP Interdisciplinary Team, an IRMP Community Advisory Committee and an extensive public involvement, public workshop, and consensus building process, the IRMP will assess changes in the physical, biological, and social elements of the Coeur d'Alene Reservation. The IRMP will benefit the tribe by documenting the desired conditions for natural and cultural resources on both tribal lands and the tribe's aboriginal lands for the next 20 to 100 years.

The Coeur d'Alene Tribe has done a comparison of past to existing environmental conditions in order to establish the parameters for which the desired future conditions will be assessed in the IRMP. General project goals are to (1) improve local environmental conditions to benefit human health, ecology and quality of life; (2) provide tools for tribal and community environmental planning and action; (3) improve environmental management by increasing communication and cooperation; and (4) involve the public throughout the planning process.

Expected issues and concerns to be addressed in the PEIS include impacts on wildlife, fish, water quality, recreation, roads, air quality, cultural and sacred sites and on residents from changes in land use, as well as socioeconomic feasibility and infrastructure changes. Alternatives will be developed to modify or eliminate the impacts from proposed activities or address unresolvable issues, while still meeting the purpose for this project.

**Public Comment Availability**

Comments, including names and addresses of respondents, will be

available for public review at the mailing address shown in the **ADDRESSES** section, during regular business hours, 8 a.m. to 5 p.m., Monday through Friday, except holidays. Individual respondents may request confidentiality. If you wish us to withhold your name and/or address from public review or from disclosure under the Freedom of Information Act, you must state this prominently at the beginning of your written comment. Such requests will be honored to the extent allowed by law. We will not, however, consider anonymous comments. All submissions from organizations or businesses, and from individuals identifying themselves as representatives or officials of organizations or businesses will be made available for public inspection in their entirety.

### Authority

This notice is published in accordance with section 1503.1 of the Council on Environmental Quality Regulations (40 CFR parts 1500 through 1508) implementing the procedural requirements of the National Environmental Policy Act of 1969, as amended (42 U.S.C. 4321 *et seq.*), and the Department of the Interior Manual (516 DM 1–6), and is in the exercise of authority delegated to the Assistant Secretary—Indian Affairs by 209 DM 8. Nothing in this notice limits Coeur d'Alene rights as outlined in agreements between the tribe and the U.S. Government.

Dated: September 5, 2002.

**Neal A. McCaleb,**

*Assistant Secretary—Indian Affairs.*

[FR Doc. 02–23842 Filed 9–18–02; 8:45 am]

**BILLING CODE 4310–W7–P**

---

## DEPARTMENT OF THE INTERIOR

## Bureau of Land Management

**[NM–02–1020–PG]**

## Notice of Public Meeting, New Mexico Resource Advisory Council Meeting

**AGENCY:** Bureau of Land Management, Interior.

**ACTION:** Notice of public meeting.

**SUMMARY:** In accordance with the Federal Land Policy and Management Act (FLPMA) and the Federal Advisory Committee Act of 1972 (FACA), the U.S. Department of the Interior, Bureau of Land Management (BLM) New Mexico Resource Advisory Council (RAC), will meet as indicated below.

**DATES:** The meeting will be held on October 28–30, 2002, at the Philmont Scout Ranch, NM. Orientation for new members will take place on October 28 beginning at 8 a.m. An optional Field Trip is planned for the afternoon of the 28th to CS Ranch and a tour of the Ponil Fire. The regularly scheduled meeting will take place on October 29–30 beginning at 8 a.m. The meeting will adjourn at approximately 5 p.m. both days. The three established RAC subcommittees will meet in the late afternoon or evening on Tuesday, October 29. The public comment period will begin at 10 a.m. on Wednesday, October 30, and end at 12 noon.

**FOR FURTHER INFORMATION CONTACT:** Theresa Herrera, RAC Coordinator, New Mexico State Office, Office of External Affairs, Bureau of Land Management, P.O. Box 27115, Santa Fe, NM 87502–0115, (505) 438–7517.

**SUPPLEMENTARY INFORMATION:** The 15-member Council advises the Secretary of the Interior, through the Bureau of Land Management, on a variety of planning and management issues associated with public land management in New Mexico. At this meeting, topics we plan to discuss include:

Orientation for new members

Fire prevention on public lands and watershed conditions

BLM strategy for ensuring public land management is consistent with current science and public land health standards

BLM's policy and regulations on grass reserves

Otero Mesa lessons

Future collaboration for upcoming environmental impact statements and Resource Management Plans

All meetings are open to the public. The public may present written comments to the Council. Each formal Council meeting will also have time allocated for hearing public comments. Depending on the number of persons wishing to comment and time available, the time for individual oral comments may be limited. New Mexico RAC meetings are coordinated with the representative of the Governor of the State of New Mexico, the Office of the Lieutenant Governor.

Dated: September 11, 2002.

**Janice L. Gamby,**

*Acting State Director.*

[FR Doc. 02–23775 Filed 9–18–02; 8:45 am]

**BILLING CODE 4310–FB–M**

## INTERNATIONAL TRADE COMMISSION

**[Inv. No. 337–TA–465]**

## Certain Semiconductor Timing Signal Generator Devices, Components Thereof, and Products Containing Same; Notice of Commission Decision Not To Review an Initial Determination Terminating the Investigation on the Basis of a Settlement Agreement

**AGENCY:** International Trade Commission.

**ACTION:** Notice.

**SUMMARY:** Notice is hereby given that the U.S. International Trade Commission has determined not to review the presiding administrative law judge's (''ALJ's'') initial determination (''ID'') terminating the above-captioned investigation in its entirety on the basis of a settlement agreement.

**FOR FURTHER INFORMATION CONTACT:** Clara Kuehn, Esq., Office of the General Counsel, U.S. International Trade Commission, 500 E Street, SW., Washington, DC 20436, telephone (202) 205–3012. Copies of the ALJ's ID and all other nonconfidential documents filed in connection with this investigation are or will be available for inspection during official business hours (8:45 a.m. to 5:15 p.m.) in the Office of the Secretary, U.S. International Trade Commission, 500 E Street, SW., Washington, DC 20436, telephone 202–205–2000. General information concerning the Commission may also be obtained by accessing its Internet server (*http://www.usitc.gov*). The public record for this investigation may be viewed on the Commission's electronic docket (EDIS–ON–LINE) at *http://dockets.usitc.gov/eol/public.* Hearing-impaired persons are advised that information on this matter can be obtained by contacting the Commission's TDD terminal on 202–205–1810.

**SUPPLEMENTARY INFORMATION:** On August 23, 2001, the Commission instituted Inv. No. 337–TA–463 based on a complaint filed by Cypress Semiconductor Corp. (''Cypress'') against Integrated Circuit Systems, Inc. (''ICS'') and Pericom Semiconductor Corp. (''Pericom'') alleging violations of section 337 of the Tariff Act of 1930 in the importation into the United States, the sale for importation, and the sale after importation of certain power saving integrated circuits and products containing same, by reason of infringement of certain claims of U.S. Letters Patent 5,949,261. 66 FR 44375 (2001). On December 7, 2001, the

Commission instituted the above-captioned investigation based on a complaint filed by ICS against Cypress alleging violations of section 337 in the importation into the U.S., sale for importation, and sale after importation of certain semiconductor timing signal generator devices, components thereof, and products containing same, by reason of infringement of claim 9 of U.S. Letters Patent 5,036,216 and claim 6 of U.S. Letters Patent 5,703,537 (the '537 patent). 66 FR 63559 (2001). On January 22, 2002, the presiding administrative law judge (''ALJ'') consolidated the two investigations (Order No. 3) under the above caption. On February 14, 2002, the ALJ issued an ID (Order No. 6) terminating the investigation as to respondent Pericom, and on April 16, 2002, the ALJ issued an ID (Order No. 8) terminating the investigation as to the '537 patent. Those IDs were not reviewed by the Commission.On August 9, 2002, Cypress and ICS moved to terminate the investigation in its entirety on the basis of a settlement agreement. On August 16, 2002, the Commission investigative attorney filed a response supporting the joint motion.

On August 22, 2002, the ALJ issued an ID (Order No. 31) granting the joint motion to terminate. No petitions for review of the ID were filed. The authority for the Commission's determination is contained in section 337 of the Tariff Act of 1930, as amended (19 U.S.C. 1337), and in section 210.42 of the Commission's rules of practice and procedure (19 CFR 210.42).

Issued: September 13, 2002.

By order of the Commission.

**Marilyn R. Abbott,**

*Secretary to the Commission.*

[FR Doc. 02–23768 Filed 9–18–02; 8:45 am]

**BILLING CODE 7020–02–P**

---

## INTERNATIONAL TRADE COMMISSION

**[Investigation Nos. 332–350 and 332–351]**

## Monitoring of U.S. Imports of Tomatoes; Monitoring of U.S. Imports of Peppers

**AGENCY:** International Trade Commission.

**ACTION:** Decision concerning whether to publish reports in 2002.

**SUMMARY:** The Commission hereby gives notice that it will not publish a report on monitoring of U.S. imports of tomatoes in 2002, but will publish the results of its monitoring of U.S. imports of peppers, other than chili peppers, in November 2002. For further information concerning the conduct of these investigations and rules of general application, consult the Commission's Rules of Practice and Procedure, part 201, subparts A through E (19 CFR part 201), and part 207, subparts A and B (19 CFR part 207).

**EFFECTIVE DATE:** September 12, 2002.

**FOR FURTHER INFORMATION CONTACT:** Timothy McCarty (202–205–3324, *mccarty@usitc.gov*) or Cathy Jabara (202–205–3309, *jabara@usitc.gov*), Agriculture and Forest Products Division, Office of Industries, U.S. International Trade Commission, 500 E Street, SW, Washington DC, 20436, for general information, or William Gearhart (202–205–3091, *wgearhart@usitc.gov*), Office of the General Counsel, U.S. International Trade Commission, for information on legal aspects. Hearing-impaired persons can obtain information on this matter by contacting the Commission's TDD terminal on (202) 205–1810. General information concerning the Commission may also be obtained by accessing its Internet server (*http://www.usitc.gov*). The public record for these investigations may be viewed on the Commission's electronic docket (EDIS–ON–LINE) at *http://dockets.usitc.gov/eol/public.*

**SUPPLEMENTARY INFORMATION:**

### Background

Section 316 of the North American Free-Trade Agreement Implementation Act (NAFTA Implementation Act) (19 U.S.C. 3881), directs the Commission to monitor imports of fresh or chilled tomatoes (HTS heading 0702.00) and fresh or chilled peppers, other than chili peppers (HTS subheading 0709.60.00), until January 1, 2009. As a result of such monitoring, the domestic industry producing a like or directly competitive perishable agricultural product may request, in a global safeguard petition filed under section 202 of the Trade Act of 1974 or a bilateral safeguard petition filed under section 302 of the NAFTA Implementation Act, that provisional relief be provided pending completion of a full section 202 or 302 investigation. If provisional relief is requested, the Commission has 21 days in which to make its determination and to transmit any provisional relief recommendation to the President. In response to the monitoring directive, the Commission instituted investigation No. 332–350, *Monitoring of U.S. Imports of Tomatoes* (59 FR 1763) and investigation No. 332–351, *Monitoring of U.S. Imports of Peppers* (59 FR 1762).

Although section 316 of the NAFTA Implementation Act does not require that the Commission publish reports on the results of its monitoring activities, the initial notices of investigation for these studies indicated that the Commission planned to publish reports on the monitoring annually. Subsequently, the Commission has published statistical reports in those years in which it was not conducting an investigation under other statutory authority with respect to such products. The most recent monitoring reports were published in November 2001. Effective July 30, 2002, the Commission resumed its final antidumping investigation on Fresh Tomatoes from Mexico (Inv. No. 731–TA–747 (Final)). To avoid possible confusion that might result from publishing a separate data series on tomatoes, the Commission will not publish a monitoring report on tomatoes this year and will revisit the issue of publishing both reports in 2003.

### Written Submissions

The Commission does not plan to hold a public hearing in connection with preparation of the 2002 statistical report on peppers. However, interested persons are invited to submit written statements concerning the matters to be addressed in the report. Commercial or financial information which a submitter desires the Commission to treat as confidential must be provided on separate sheets of paper, each clearly marked ''Confidential Business Information'' at the top. All submissions requesting confidential treatment must conform with the requirements of section 201.6 of the Commission's Rules of Practice and Procedure (19 CFR 201.6). All written submissions, except for confidential business information, will be made available in the Office of the Secretary of the Commission for inspection by interested persons. The Commission will not include any confidential business information in its monitoring report, but may include such information in a report to the President under section 202 or 302 if a request for such an investigation were received. To be assured of consideration by the Commission, written statements relating to the Commission's report should be submitted to the Commission in accordance with section 201.8 of the Commission's rules at the earliest practical date and should be received no later than the close of business on October 3, 2002. All submissions should be addressed to the Secretary, United States International Trade Commission, 500 E Street SW., Washington, DC 20436.

Issued: September 13, 2002.

By order of the Commission.

**Marilyn R. Abbott,**

*Secretary to the Commission.*

[FR Doc. 02–23799 Filed 9–18–02; 8:45 am]

BILLING CODE 7020–02–P

## INTERNATIONAL TRADE COMMISSION

**[Investigation TA–2111–1]**

## The Impact of Trade Agreements: Effect of the Tokyo Round, U.S.-Israel FTA, U.S.-Canada FTA, NAFTA, and the Uruguay Round on the U.S. Economy

**AGENCY:** United States International Trade Commission.

**ACTION:** Institution of investigation and scheduling of public hearing.

**EFFECTIVE DATE:** September 12, 2002.

**SUMMARY:** Following the President's signature on August 6, 2002, of the Trade Act of 2002, the Commission instituted investigation No. TA–2111–1, The Impact of Trade Agreements: Effect of the Tokyo Round, U.S.-Israel FTA, U.S.-Canada FTA, NAFTA, and the Uruguay Round on the U.S. Economy.

The Commission instituted the investigation for the purpose of fulfilling the requirement in section 2111 of the Trade Act of 2002 (Pub. L. 107–210, 116 Stat. 933), that it report to the Committee on Ways and Means of the House of Representatives and the Committee on Finance of the Senate not later than 1 year after the date of enactment regarding the economic impact on the United States of the following trade agreements: the Tokyo Round of Multilateral Trade Negotiations, the United States-Israel Free Trade Agreement, the United States-Canada Free Trade Agreement, the North American Free Trade Agreement, and the Uruguay Round Agreements.

**FOR FURTHER INFORMATION CONTACT:** Further information may be obtained from Kyle Johnson, Project Leader (202–205–3229) or Russell Hillberry, Deputy Project Leader (202–708–5405), Office of Economics, U.S. International Trade Commission, Washington, DC, 20436. For information on the legal aspects of this investigation, contact William Gearhart of the Office of the General Counsel (202–205–3091). Hearing impaired individuals are advised that information on this matter can be obtained by contacting the TDD terminal on (202) 205–1810.

### Public Hearing

A public hearing in connection with the investigation will be held at the U.S. International Trade Commission Building, 500 E Street SW., Washington, DC, beginning at 9:30 a.m. on January 14, 2003. All persons shall have the right to appear, by counsel or in person, to present information and to be heard. Requests to appear at the public hearing should be filed with the Secretary, United States International Trade Commission, 500 E Street SW., Washington, DC 20436, no later than 5:15 p.m., December 27, 2002. Any prehearing briefs (original and 14 copies) should be filed not later than 5:15 p.m., January 3, 2003; the deadline for filing post-hearing briefs or statements is 5:15 p.m., February 14, 2003. In the event that, as of the close of business on December 27, 2002, no witnesses are scheduled to appear at the hearing, the hearing will be canceled. Any person interested in attending the hearing as an observer or non-participant may call the Secretary of the Commission (202–205–1806) after December 27, 2002, to determine whether the hearing will be held.

### Written Submissions

In lieu of or in addition to participating in the hearing, interested parties are invited to submit written statements (original and 14 copies) concerning the matters to be addressed by the Commission in its report on this investigation. Commercial or financial information that a submitter desires the Commission to treat as confidential must be submitted on separate sheets of paper, each clearly marked ''Confidential Business Information'' at the top. All submissions requesting confidential treatment must conform with the requirements of section 201.6 of the Commission's Rules of Practice and Procedure (19 CFR 201.6). All written submissions, except for confidential business information, will be made available in the Office of the Secretary of the Commission for inspection by interested parties. The Congressional committees have requested that the Commission prepare a public report (containing no confidential business information). Accordingly, any confidential business information received by the Commission in this investigation and used in preparing the report will not be published in a manner that would reveal the operations of the firm supplying the information. To be assured of consideration by the Commission, written statements relating to the Commission's report should be submitted to the Commission at the earliest practical date and should be received no later than the close of business on February 14, 2003. All submissions should be addressed to the Secretary, United States International Trade Commission, 500 E Street SW., Washington, DC 20436. The Commission's rules do not authorize filing submissions with the Secretary by facsimile or electronic means. Persons with mobility impairments who will need special assistance in gaining access to the Commission should contact the Office of the Secretary at 202–205–2000. General information concerning the Commission may also be obtained by accessing its Internet server (http://www.usitc.gov).

*List of Subjects:* TPA, Trade Act of 2002, tariffs, imports.

Issued: September 13, 2002.

By order of the Commission.

**Marilyn R. Abbott,**

*Secretary to the Commission.*

[FR Doc. 02–23767 Filed 9–18–02; 8:45 am]

BILLING CODE 7020–02–P

## DEPARTMENT OF LABOR

### Office of the Secretary

### Submission for OMB Review; Comment Request

September 11, 2002.

The Department of Labor (DOL) has submitted the following public information collection request (ICR) to the Office of Management and Budget (OMB) for review and approval in accordance with the Paperwork Reduction Act of 1995 (Pub. L. 104–13, 44 U.S.C. Chapter 35). A copy of this ICR, with applicable supporting documentation, may be obtained by calling the Department of Labor. To obtain documentation, contact Darrin King (202) 693–4129 or E–Mail: *King-Darrin@dol.gov.*

Comments should be sent to Office of Information and Regulatory Affairs, Attn: OMB Desk Officer for OSHA, Office of Management and Budget, Room 10235, Washington, DC 20503 ((202) 395–7316), within 30 days from the date of this publication in the **Federal Register**.

The OMB is particularly interested in comments which:

- Evaluate whether the proposed collection of information is necessary for the proper performance of the functions of the agency, including whether the information will have practical utility;
- Evaluate the accuracy of the agency's estimate of the burden of the

proposed collection of information, including the validity of the methodology and assumptions used;

• Enhance the quality, utility, and clarity of the information to be collected; and

• Minimize the burden of the collection of information on those who are to respond, including through the use of appropriate automated, electronic, mechanical, or other technological collection techniques or other forms of information technology, *e.g.*, permitting electronic submission of responses.

*Agency:* Occupational Safety and Health Administration (OSHA).

*Title:* Trucks Used Underground to Transport Explosives [29 CFR 1926.903(e)]—Inspection Certification.

*Type of Review:* Extension of a currently approved collection.

*OMB Number:* 1218–0227.

*Frequency:* Weekly.

*Affected Public:* Business or other for-profit; Federal Government; State, Local, or Tribal Government.

*Number of Respondents:* 1.

*Number of Annual Responses:* 52.

*Estimated Time Per Response:* 10 minutes.

*Total Burden Hours:* 9 hours.

*Total Annualized capital/startup costs:* $0.

*Total annual costs (operating/maintaining systems or purchasing services):* $0.

*Description:* 29 CFR 1926.903(e) requires certification of a weekly maintenance inspection of trucks used underground to transport explosives. The inspection certification, which attests to the safety of the truck's electrical system, is necessary to ensure compliance with the standard and ensure safe operating conditions for employees.

**Ira L. Mills,**

*Departmental Clearance Officer.*

[FR Doc. 02–23762 Filed 9–18–02; 8:45 am]

**BILLING CODE 4510–26–M**

## NATIONAL AERONAUTICS AND SPACE ADMINISTRATION

**[Notice 02–108]**

### Notice of Prospective Patent License

**AGENCY:** National Aeronautics and Space Administration.

**ACTION:** Notice of prospective patent license.

**SUMMARY:** NASA hereby gives notice that Intellimotion Systems Corporation of Moffett Field, CA, has applied for partially exclusive license to practice the invention described and claimed in U. S. Patent Nos. 6,161,097 and 6,278,965, ''Automated Traffic Management System and Method,'' and ''Real-Time Surface Traffic Advisor'' (TRAJECT), which are both assigned to the United States of America as represented by the Administrator of the National Aeronautics and Space Administration. Written objections to the prospective grant of a license should be sent to NASA Ames Research Center.

**DATES:** Responses to this notice must be received by October 4, 2002.

**FOR FURTHER INFORMATION CONTACT:** Robert M. Padilla, Chief Patent Counsel, NASA Ames Research Center, Mail Stop 202A–4, Moffett Field, CA 94035–1000, telephone (650) 604–5104.

Dated: September 13, 2002.

**Robert M. Stephens,**

*Deputy General Counsel.*

[FR Doc. 02–23766 Filed 9–18–02; 8:45 am]

**BILLING CODE 7510–01–P**

## RAILROAD RETIREMENT BOARD

### Proposed Data Collection Available for Public Comment and Recommendations

**SUMMARY:** In accordance with the requirement of Section 3506(c)(2)(A) of the Paperwork Reduction Act of 1995 which provides opportunity for public comment on new or revised data collections, the Railroad Retirement Board (RRB) will publish periodic summaries of proposed data collection.

*Comments are invited on:* (a) Whether the proposed information collection is necessary for the proper performance of the functions of the agency, including whether the inforamtion has practical utility; (b) the accuracy fo the RRB's estimate of the burden of the collection of the information; (c) ways to enhance the quality, utility, and clarity of the information to be collected; and (d) ways to minimize the burden related to the collection of information on respondents, including the use of automated collection techniques or other forms of information technology.

*Title and purpose of information collection:* Request to Non-Railroad Employer for Information About Annuitant's Work and Earnings; OMB 3220–0107.

Under Section 2 of the Railroad Retirment Act (RRA), a railroad employee's retirement annuity or an annuity paid to the spouse of a railroad employee is subject to work deduction in the Tier II component of the annuity and any employee supplemental annuity for any month in which the annuitant works for a Last Pre-Retirement Non-Railroad Employer (LPE). LPE is defined as the last person, company, or institution, other than a railroad employer, that employed an employee or spouse annuitant. In addition, the employee, spouse or divorced spouse Tier I annuity benefit is subject to work reductions under Section 2(F)(1) of the RRA for earnings from any non-railroad employer that are over the annual exempt amount. The regulations pertaining to non-payment of annuities by reason of work are contained in 20 CFR 230.1 and 230.2.

The RRB utilizes Form RL–231–F, Request to Non-Railroad Employer for Information About Annuitant's Work and Earnings, to obtain the information needed for determining if any work deduction should be applied because an annuitant worked in non-railroad employemnt after the annuity beginning date. One response is requested of each respondent. Completion is voluntary. The RRB is proposing a minor non-burden impacting editorial change to Form RL–231–F.

**Estimate of Annual Respondent Burden**

The estimated annual respondent burden is as follows:

| Form Nos. | Annual re-sponses | Time (min) | Burden (hrs) |
|---|---|---|---|
| RL–231–F .. | 300 | 30 | 150 |
| Total .... | 300 | ..... | 150 |

*Additional Information or Comments:* To request more information or to obtain a copy of the information collection justification, forms, and/or supporting material, please call the RRB Clearance Officer at (312) 751–3363. Comments regarding the information collection should be addressed to Ronald J. Hodapp, Railroad Retirement Board, 844 N. Rush Street, Chicago, Illinois 60611–2092. Written comments should be received within 60 days of this notice.

**Chuck Mierzwa,**

*Clearance Officer.*

[FR Doc. 02–23770 Filed 9–18–02; 8:45 am]

**BILLING CODE 7905–01–M**

## SECURITIES AND EXCHANGE COMMISSION

**[Investment Company Act Release No. 25729/812–12460]**

## Notice of Application of The Mexico Fund, Inc. and Commission Statement

September 13, 2002.

**AGENCY:** Securities and Exchange Commission (the ''Commission'').

**ACTIONS:** (1) Notice of an application under sections 6(c), 17(b) and 23(c)(3) of the Investment Company Act of 1940 (the ''Act'') for exemptions from sections 5(a)(2), 17(a)(1) and 17(a)(2) of the Act and rule 23c–3 under the Act; and (2) Commission statement concerning section 17(d) of the Act and rule 17d–1 under the Act.

**SUMMARY OF APPLICATION AND COMMISSION STATEMENT:** The Mexico Fund, Inc. (the ''Fund'') requests an order that would permit the Fund to make periodic repurchase offers in compliance with rule 23c–3 under the Act except that (a) the repurchase offers would be for between one and one hundred percent of the Fund's outstanding shares provided that the Fund will offer to repurchase at least five percent of its outstanding shares each fiscal year; (b) shareholders participating in the repurchase offers would receive in-kind pro-rata portfolio securities of the Fund for their shares; and (c) the board of directors of the Fund (''Board'') would be able to set and reset the periodic interval between repurchase offers at three, six or 12 months upon prior notice to shareholders. The requested order also would grant relief from sections 5(a)(2) and 17(a) of the Act. The Commission also is issuing a statement concerning reimbursement of proxy solicitation expenses of an affiliated shareholder and similar transactions by registered investment companies which present issues under section 17(d) of the Act and rule 17d-1 under the Act (*see* Commission Statement *infra*).

**FILING DATES:** The application was filed on March 2, 2001, and amended on February 22, 2002, June 5, 2002, August 1, 2002 and August 16, 2002.

**HEARING OR NOTIFICATION OF HEARING:** An order granting the application will be issued unless the Commission orders a hearing. Interested persons may request a hearing by writing to the Commission's Secretary and serving applicant with a copy of the request, personally or by mail. Hearing requests should be received by the Commission by 5:30 p.m. on October 4, 2002, and should be accompanied by proof of service on the applicant, in the form of an affidavit, or, for lawyers, a certificate of service. Hearing requests should state the nature of the writer's interest, the reason for the request, and the issues contested. Persons who wish to be notified of a hearing may request notification by writing to the Commission's Secretary.

**ADDRESSES:** Secretary, Securities and Exchange Commission, 450 Fifth Street, NW, Washington, DC 20549–0609. Applicant, The Mexico Fund, Inc., 1775 Eye Street, NW, Washington, DC 20006, Attention Sander M. Bieber, *Esq*.

**FOR FURTHER INFORMATION CONTACT:** Karen L. Goldstein, Senior Counsel, at (202) 942–0646, or Janet M. Grossnickle, Branch Chief, at (202) 942–0564 (Division of Investment Management, Office of Investment Company Regulation).

**SUPPLEMENTARY INFORMATION:** The following is a summary of the application and a Commission statement. The complete application may be obtained for a fee at the Commission's Public Reference Branch, 450 Fifth Street, NW, Washington, DC 20549–0102 (telephone (202) 942–8090).

### Applicant's Representations in the Application

1. The Fund is a Maryland corporation registered under the Act as a closed-end non-diversified management investment company. Shares of the Fund are listed and trade on the New York Stock Exchange (''NYSE''). Impulsora del Fondo México, S.A. de C.V., a Mexican corporation registered under the Investment Advisers Act of 1940, serves as investment adviser to the Fund.

2. The Fund's investment objective is to provide long-term capital appreciation through investment in securities listed on the Bolsa Mexicana de Valores, S.A. de C.V. (the ''Mexican Stock Exchange''). Since 1997, an average of 95 percent of the Fund's assets have been invested in equity securities of Mexican issuers. The Fund also may invest in Mexican fixed-income securities, bank time deposits of Mexican banks and U.S. fixed income securities. All of the equity securities and most of the fixed-income securities acquired for investment by the Fund are listed on the Mexican Stock Exchange. Applicant states that with $346 million of net assets under management, the Fund is one of the largest U.S. funds investing in equity securities of the Mexican market. The Fund's net assets represent about 3.4 times the size of the daily trading volume of the Mexican Stock Exchange.

3. Applicant states that the Mexican market is relatively illiquid and concentrated and, along with the Fund's investment strategy, is largely responsible for the Fund's organization as a closed-end investment company. Applicant states that the Fund's shares typically have traded at a discount to their net asset value (the ''market discount''), which has averaged over twenty percent since 1998. In the past, the Fund has conducted share repurchase programs and a tender offer for its shares, each of which, the Fund states, reduced the market discount temporarily.

4. The Fund proposes to conduct periodic repurchase offers for its shares at net asset value (each a ''Repurchase Offer'') pursuant to a fundamental policy that has been approved by the Fund's shareholders (''Fundamental Policy''). Under the Fund's proposal (the ''Repurchase Structure''), the Fund would offer to repurchase no less than five percent of the Fund's outstanding shares during each fiscal year, based on the number of shares outstanding at the beginning of the fiscal year. Repurchase Offers would be conducted at least once each fiscal year, but no more frequently than quarterly, and would be for between one and one hundred percent of the Fund's outstanding shares (the ''Repurchase Offer Amount''). The Board would be able to set or reset the periodic interval between Repurchase Offers at three, six or 12 months.

5. Under the Repurchase Structure, shareholders submitting shares to be repurchased would receive a pro-rata distribution of the equity securities held by the Fund,[1] valued at net asset value minus a repurchase fee of no more than two percent.[2] The Fund may pay cash for fractional shares and odd lots of securities, round off odd lots or fractional shares to eliminate them prior to distribution, or pay a higher pro-rata percentage of equity securities to represent these items. If a greater number of shares are submitted for repurchase than the total amount of the

[1] Under the Repurchase Structure, shareholders will not receive (a) securities which, if distributed, would be required to be registered under the Securities Act of 1933 (''Securities Act''); (b) securities issued by entities in countries which restrict or prohibit the holding of securities by non-nationals other than through qualified investment vehicles; and (c) certain portfolio assets thast involve the assumption of contractual obligastions, require special trading facilities or can only be traded with the coutnerparty to the transaction in order to effect a change in beneficial ownership.

[2] The Fund states that it has received a ruling from the Internal Revenue Service finding that the in-kind disstribution of securities by the Fund, in payment for the repurchases, will not result in the recognition of any taxable gains to the Fund. *See* PLR–200148030 (Aug. 28, 2001).

Repurchase Offer, each participating shareholder would receive a pro-rata share of the distribution equal to the total shares repurchased. The Repurchase Structure has been approved by the Fund's shareholders, subject to the Fund's obtaining the requested order. The Repurchase Structure would be disclosed in the Fund's annual, semi-annual and quarterly reports.

6. The Fund requests relief from rule 23c–3 under the Act to the extent necessary to conduct the Repurchase Offers and from section 5(a)(2) of the Act to remain a closed-end company should its securities be deemed ''redeemable securities'' as a result of the Repurchase Structure. The Fund also requests relief from sections 17(a)(1) and 17(a)(2) of the Act to allow any Fund shareholder who is an ''affiliated person'' of the Fund within the meaning of section 2(a)(3) of the Act solely by virtue of owning five percent or more of the outstanding voting securities of the Fund (''Affiliated Shareholder'') to participate in the Repurchase Structure. The requested order would not apply to shareholders who are affiliated persons of the Fund within the meaning of sections 2(a)(3)(B) through (F) of the Act.

**Applicant's Legal Analysis in the Application**

1. Section 23(c) of the Act provides, in relevant part, that no registered closed-end investment company may purchase any securities of any class of which it is the issuer except: (a) On a securities exchange or other open market; (b) pursuant to tenders, after reasonable opportunity to submit tenders given to all holders of securities of the class to be purchased; or (c) under such other circumstances as the Commission may permit by rules and regulations or orders for the protection of investors in order to insure that such purchases are made in a manner or on a basis that does not discriminate unfairly against any holders of the class or classes of securities to be purchased.

2. Section 6(c) of the Act provides that the Commission may exempt any person, security, or transaction from any provision of the Act or rule thereunder, if and to the extent that such exemption is necessary or appropriate in the public interest and consistent with the protection of investors and the purposes fairly intended by the policy and provisions of the Act.

3. Rule 23c–3 under the Act permits a registered closed-end investment company to make repurchase offers at net asset value to its shareholders at periodic intervals pursuant to a fundamental policy of the investment company. The Fund states that the Repurchase Structure would comply with rule 23c–3, except for paragraphs (a)(3), (b)(1), (b)(2) and (b)(10) of the rule.

4. Rule 23c–3(a)(3) under the Act requires that a repurchase offer amount must be no less than five or more than twenty-five percent of a fund's outstanding common stock on the repurchase request deadline. Applicant seeks an exemption from this provision to the extent necessary to conduct a Repurchase Offer for an amount between one and one hundred percent of its outstanding shares provided that the Fund will offer to repurchase at least five percent of its outstanding shares each fiscal year. Applicant states that a Repurchase Offer Amount of between one and one hundred percent would provide shareholders with an equal and definite opportunity to sell Fund shares at net asset value (minus a repurchase fee). The Fund also notes that, as long as its shares are listed on the NYSE, shareholders would retain their ability to sell shares at market price. Applicant further asserts that Repurchase Offers in the range of one to one hundred percent would complement the flexibility sought by the Fund in determining the periodic intervals and may be prudent given the capitalization and average trading volume of the Mexican securities market.

5. Rule 23c–3(b)(1) under the Act requires that repurchase proceeds be paid in cash. The Fund requests an exemption from rule 23c–3(b)(1) to the extent necessary to allow it to pay shareholders who participate in the Repurchase Offers with a pro-rata distribution of the Fund's portfolio securities. Applicant states that in-kind repurchases are preferable for the Fund because it invests in a relatively illiquid market and would allow the Fund to better commit its assets to its investment objective.

Applicant also states that a periodic liquidation of the Fund's assets to conduct Repurchase Offers in cash would likely have a negative impact on the Mexican securities market and force the Fund to accept lower prices for liquidated securities. Applicant further states that in-kind repurchases will allow shareholders the discretion as to whether and when to sell securities received in the Repurchase Offers and allow shareholders remaining in the Fund to avoid realization of long-term capital gains.

6. Rule 23c–3(b)(10) requires that, from the time shareholders receive notification of a repurchase offer until the repurchase pricing date, the Fund maintain an amount of liquid assets equal to at least one hundred percent of the minimum amount of the dollar value of the shares offered to be repurchased. The Fund states that this requirement is not necessary as applied to the Repurchase Structure because the Fund will conduct Repurchase Offers in-kind rather than for cash. The Fund represents that it will, from the time it sends notification to shareholders pursuant to rule 23c–3(b)(4) until the repurchase pricing date, maintain a percentage of the Fund's assets approximately equal to the portion of the Repurchase Offer Amount that the Fund reasonably expects will be paid in cash in assets that can be sold or disposed of in the ordinary course of business, at approximately the price at which the Fund has valued the investment, within a period equal to the period between the repurchase request deadline and the repurchase payment deadline or of assets that mature by the next repurchase payment deadline.

7. Rule 23c–3(b)(2) requires that repurchase offers be made at periodic intervals specified in the fundamental policy. The Fund requests an exemption from rule 23c–3(b)(2)(i)(B) and (C) to the extent necessary to permit the Board, pursuant to the Fundamental Policy, to set and reset the periodic intervals at which Repurchase Offers will be made at three, six, or 12 months (''Repurchase Offer Intervals''). The Fund states that it will provide written notice of the information required by rule 23c–3(b)(2)(i)(B) and (C) to shareholders notifying them of any change in the Repurchase Offer Interval prior to, or simultaneously with, the notification for the most recent Repurchase Offer if the Repurchase Offer Interval is lengthened, and in the Fund's quarterly reports if the Repurchase Offer Interval is shortened. The Fund believes that the Repurchase Structure would provide Fund shareholders considerably more certainty than would be available under a discretionary repurchase program while providing the Fund flexibility to change Repurchase Offer Intervals when advisable. Applicants state that, when determining whether a Repurchase Offer Interval should be reset, the Board will consider, among other things, the factors set forth in condition 9 below.

*Section 5(a)(2) of the Act*

1. Section 5(a)(2) of the Act defines ''closed-end company'' as ''any management company other than an open-end company.'' Section 5(a)(1) of the Act defines ''open-end company'' as ''a management company which is offering for sale or has outstanding any redeemable security for which it is the

issuer.'' Section 2(a)(32) defines ''redeemable security'' as any security, other than short-term paper, under the terms of which the holder, upon presentation to the issuer, is entitled to receive approximately his proportionate share of the issuer's current net assets, or the cash equivalent thereof. Applicant seeks exemptive relief from section 5(a)(2) to assure that the Fund maintains its status as a closed-end company notwithstanding the possibility that the Repurchase Structure may cause the Fund to be deemed an issuer of redeemable securities and thus an open-end company.

2. Applicant submits that in formulating rule 23c–3, the Commission recognized that many aspects of regular, periodic repurchase offers by closed-end funds could raise concerns that are associated with open-end funds' redeemable securities. These concerns include the method of pricing shares for repurchase, potential suspension of repurchase offers, and excessive leverage. Applicant states that rule 23c–3 addresses these concerns by requiring ''forward pricing'' of fund shares for repurchase (the same method required for open-end funds), prohibiting suspensions of repurchase offers except under circumstances generally permitted open-end funds, and imposing specific requirements on the amount and type of leverage that a closed-end fund relying on the rule may incur. Applicant states that because it will be subject to these requirements, the concerns associated with redeemable securities are appropriately addressed. Applicant also states that, as a condition to the requested order, the Fund will not be advertised or marketed as an open-end fund or mutual fund nor will its securities be advertised or marketed as redeemable. Applicant believes therefore that an exemption from section 5(a)(2) is appropriate in the public interest and consistent with the protection of investors and the purposes fairly intended by the policy and provisions of the Act.

*Sections 17(a)(1) and 17(a)(2) of the Act*

1. Section 17(a)(1) of the Act prohibits any affiliated person of a registered investment company, or any affiliated person of such person, acting as principal, from knowingly selling any security or other property to that company. Section 17(a)(2) of the Act generally prohibits any affiliated person, acting as principal, from knowingly purchasing any security or other property from the registered investment company. Section 2(a)(3)(A) of the Act defines an ''affiliated person'' to include any person owning five percent or more of the outstanding voting securities of the other person. Applicant states that to the extent that a Repurchase Offer could be deemed to involve the sale or purchase of portfolio securities by an Affiliated Shareholder, the participation of Affiliated Shareholders in the Repurchase Offer would be prohibited by sections 17(a)(1) and 17(a)(2).

2. Section 17(b) of the Act provides that, notwithstanding section 17(a) of the Act, the Commission shall exempt a proposed transaction from section 17(a) if evidence establishes that: (a) The terms of the proposed transaction are reasonable and fair and do not involve overreaching; (b) the proposed transaction is consistent with the policy of each registered investment company involved; and (c) the proposed transaction is consistent with the general purposes of the Act.

3. Applicant states that because all shareholders participating in a Repurchase Offer will receive a pro-rata distribution of the Fund's portfolio securities, neither the Fund nor an Affiliated Shareholder will have any choice as to the securities to be distributed as proceeds in the Repurchase Offers. Applicant further states that securities to be distributed under the Repurchase Structure will be valued in the same manner as they would be valued for the purposes of computing the Fund's net asset value. Applicant submits that the terms of the proposed transactions by Affiliated Shareholders therefore meet the standards set forth in sections 6(c) and 17(b) of the Act.

**Applicant's Conditions in the Application**

Applicant agrees that any order granting the requested relief will be subject to the following conditions:

1. The Repurchase Structure will comply with rule 23c–3 under the Act except for subparagraphs (a)(3), (b)(1), (b)(2) and (b)(10).

2. Repurchases made pursuant to the Repurchase Structure will comply with rule 23c–3(a)(3) under the Act except to the extent necessary to permit the Fund to offer to repurchase between one and one hundred percent of its outstanding common stock. The Fund will offer to repurchase no less than five percent of its outstanding shares during each fiscal year (based on the number of outstanding shares at the beginning of the fiscal year).

3. Repurchases made pursuant to the Repurchase Structure will comply with rule 23c–3(b)(1) under the Act except to the extent necessary to permit the Fund to pay shareholders who participate in the repurchases with a pro-rata portion of the Fund's portfolio securities.

4. Repurchases made pursuant to the Repurchase Structure will comply with rule 23c–3(b)(2) under the Act, except for subparagraphs (i)(B) and (C) to the extent necessary to permit the Fund to have the Fundamental Policy that allows the Board to set or reset the Repurchase Offer Intervals to three, six, or 12 months, provided that written notice (containing the information addressed in subparagraphs (i)(B) and (C)) of any change in the Repurchase Offer Interval is provided to shareholders prior to or simultaneously with the notification required by rule 23c–3(b)(4) for the last Repurchase Offer under the former Repurchase Offer Interval.

5. Repurchases made pursuant to the Repurchase Structure will comply with rule 23c–3(b)(10) under the Act except, in place of the requirements of subparagraph (i), the Fund will, from the time the Fund sends a repurchase offer notice until the repurchase pricing date, maintain a percentage of the Fund's assets approximately equal to the portion of the Repurchase Offer Amount that the Fund reasonably expects will be paid in cash in assets that can be sold or disposed of in the ordinary course of business, at approximately the price at which the Fund has valued the investment, within a period equal to the period between a repurchase request deadline and the repurchase payment deadline, or of assets that mature by the next repurchase payment deadline.

6. The Board, including a majority of directors who are not ''interested persons,'' as defined in section 2(a)(19) of the Act (''Independent Directors''), shall adopt procedures reasonably designed to ensure the Fund's compliance with the terms and conditions of this application and make and approve such changes to these procedures as it deems necessary.

7. The Fund will distribute to shareholders participating in the Repurchase Structure an in-kind pro-rata distribution of equity portfolio securities of the Fund. The pro-rata distribution will not include (a) securities which, if distributed, would be required to be registered under the Securities Act; (b) securities issued by entities in countries which restrict or prohibit the holding of securities by non-nationals other than through qualified investment vehicles; and (c) certain portfolio assets (such as forward currency exchange contracts, futures and options contracts, and repurchase agreements) that, although they may be liquid and marketable, include the

assumption of contractual obligations, require special trading facilities or can only be traded with the counterparty to the transaction in order to effect a change in beneficial ownership.

8. Securities distributed as proceeds for participation in the Repurchase Structure will be valued in the same manner as they would be valued for the purposes of computing the Fund's net asset value on the repurchase pricing date, which, in the case of securities traded on a public securities market for which quotations are available, is their last reported sales price on the exchange on which the securities are primarily traded or at the last sales price on the national securities market, or, if the securities are not listed on an exchange or the national securities market or if there is no such reported price, the average of the most recent bid and asked price (or, if no such asked price is available, the last quoted bid price). The securities distributed to shareholders pursuant to Repurchase Offers will be limited to securities that are traded on a public securities market or for which quoted bid and asked prices are available.

9. The Board, including a majority of Independent Directors, in determining whether to reset the Repurchase Offer Intervals will consider, among other things, whether shares are trading at a market discount or premium; the effect of a Repurchase Offer's timing on the Mexican securities market (given the size of the Repurchase Offer and the liquidity of the Fund's assets and the liquidity of the Mexican securities markets); the potential shareholder demand for Repurchase Offers given the current trading activity of Fund shares and its market and net asset values; the interests of shareholders not participating in the Repurchase Offers; and the history of the Fund in operating the Repurchase Structure.

10. The Fund will not be advertised or marketed as an open-end fund or mutual fund nor will its securities be advertised or marketed as redeemable. The Fund will disclose the terms of the Repurchase Structure in its annual, semi-annual and quarterly reports.

11. The Repurchase Structure will be conducted in a manner consistent with the investment and other policies of the Fund.

12. The Board, including a majority of the Independent Directors, will determine no less frequently than annually: (a) whether the portfolio securities distributed as proceeds of Repurchase Offers have been valued and distributed in accordance with the terms and conditions of this application; and (b) whether the Fund conducted the Repurchase Offers during the preceding year in accordance with the terms and conditions of this application.

13. The Fund will maintain and preserve for a period of not less than six years from the end of the fiscal year in which any in-kind repurchase occurs, the first two years in an easily accessible place, a written record of each repurchase that includes the identity of each shareholder of record that participated in the repurchase, whether that shareholder was an Affiliated Shareholder, a description of each security distributed, the terms of the distribution, the information or materials upon which the valuation was made, and a record of the Board's determinations made pursuant to the terms and conditions of this application.

**Commission Statement**

In connection with the Fund's annual shareholders meeting, in February 2002, Laxey Partners Limited (''Laxey''), then a beneficial owner of over 5% of the Fund's outstanding shares, filed with the Commission a definitive proxy statement (''Proxy Statement''). The Proxy Statement solicited proxies for, among other things, the election of two directors to the Board and termination of the Fund's Investment Advisory and Management Agreement with Impulsora del Fondo Mexico, S.A., de C.V. (''Adviser''). On March 6, 2002, the Fund announced that the Board approved a policy to conduct quarterly in-kind repurchase offers at 98% of net asset value for 100% of the Fund's outstanding shares. On March 7, 2002, Laxey withdrew its Proxy Statement proposals from consideration at the annual shareholders meeting. Also on March 7, 2002, the Fund entered into a standstill agreement with Laxey and agreed to reimburse Laxey for its fees and expenses in connection with the proxy solicitation (''Reimbursement Agreement''). The Fund paid approximately $600,000 to Laxey pursuant to the Reimbursement Agreement. We note that the Fund's shareholders have now received from the Fund's Adviser the monies paid to Laxey out of Fund assets, together with the appropriate interest.

In light of these occurrences, the Commission takes this opportunity to remind the fund industry of the importance of the requirements of section 17(d) and rule 17d–1 particularly in the context of an agreement to reimburse the costs of a proxy contest. These provisions broadly prohibit certain joint transactions or arrangements between registered investment companies and their affiliates without the Commission's advance approval. Approval must be sought from the Commission prior to investment companies engaging in reimbursement agreements of this type.

The Commission considers it essential that the industry carefully scrutinize any use of fund assets to reimburse proxy contestants, and cautions the industry to refrain from effecting inappropriate reimbursement arrangements.

Since the requested exemption is for the benefit of Fund shareholders, we are approving the issuance of the notice of the application.

By the Commission.

**J. Lynn Taylor,**

*Assistant Secretary.*

[FR Doc. 02–23783 Filed 9–18–02; 8:45 am]

**BILLING CODE 8010–01–P**

---

## SECURITIES AND EXCHANGE COMMISSION

**[Investment Company Act Release No. 25730; 812–12298]**

## TCW Convertible Securities Fund, Inc.; Notice of Application

September 13, 2002.

**AGENCY:** Securities and Exchange Commission (''Commission'').

**ACTION:** Notice of an application for an order under section 6(c) of the Investment Company Act of 1940 (the ''Act'') for an exemption from section 19(b) of the Act and rule 19b–1 under the Act.

**SUMMARY OF THE APPLICATION:** TCW Convertible Securities Fund, Inc. (''Applicant'') requests an order to permit it to make up to four long-term capital gains distributions in any one taxable year, so long as it maintains in effect a distribution policy calling for quarterly distributions of a fixed dollar amount or a fixed percentage of net asset value.

**FILING DATES:** The application was filed on October 12, 2000 and amended on August 29, 2002.

**HEARING OR NOTIFICATION OF HEARING:** An order granting the application will be issued unless the Commission orders a hearing. Interested persons may request a hearing by writing to the Commission's Secretary and serving the Applicant with a copy of the request, personally or by mail. Hearing requests should be received by the Commission by 5:30 p.m. on October 7, 2002, and should be accompanied by proof of service on the Applicant in the form of an affidavit or, for lawyers, a certificate of service. Hearing requests should state the nature of the writer's interest, the

reason for the request, and the issues contested. Persons who wish to be notified of a hearing may request notification by writing to the Commission's Secretary.

**ADDRESSES:** Secretary, Commission, 450 Fifth Street, NW., Washington, DC 20549–0609. Applicant, c/o Philip K. Holl, TCW Investment Management Corporation, 865 South Figueroa Street, Suite 1800, Los Angeles, CA 90017.

**FOR FURTHER INFORMATION CONTACT:** Emerson S. Davis, Sr., Senior Counsel, at (202) 942–0714, or Janet M. Grossnickle, Branch Chief, at (202) 942–0564 (Division of Investment Management, Office of Investment Company Regulation).

**SUPPLEMENTARY INFORMATION:** The following is a summary of the application. The complete application may be obtained for a fee from the Commission's Public Reference Branch, 450 Fifth Street, NW., Washington, DC 20549–0102 (telephone (202) 942–8090).

## Applicant's Representations

1. Applicant is organized as a Maryland corporation and is registered under the Act as a closed-end diversified management investment company. Applicant's investment objective is to seek total investment return, composed of current income and capital appreciation, through investment principally in convertible securities. TCW Investment Management Company (''Investment Adviser''), an investment adviser registered under the Investment Advisers Act of 1940, serves as investment adviser to Applicant. Applicant's shares are listed and traded on the New York Stock Exchange.

2. On June 15, 1988, Applicant's board of directors (''Board''), including a majority of the members who are not ''interested persons,'' as defined in section 2(a)(19) of the Act (''Independent Directors''), adopted a managed distribution policy with respect to Applicant's common stock (''Distribution Policy'') that calls for distributions, on a quarterly basis, of $0.21 per share. In adopting the Distribution Policy, the Board, including a majority of the Independent Directors, concluded that a policy to provide steady, predictable cash distributions to shareholders would be in the best interest of the shareholders. Applicant states that in continuing the Distribution Policy, the Board has considered empirical evidence that, in some cases, discounts to net asset value of other closed-end funds have narrowed or have been eliminated with managed distribution policies.

3. Applicant requests relief to permit it, so long as it maintains in effect the Distribution Policy calling for quarterly distributions at a fixed dollar amount or fixed percentage of net asset value, to make up to four long-term capital gains distributions in any one taxable year.

## Applicant's Legal Analysis

1. Section 19(b) of the Act provides that a registered investment company may not, in contravention of such rules, regulations, or orders as the Commission may prescribe, distribute long-term capital gains more often than once every twelve months. Rule 19b–1(a) under the Act permits a registered investment company, with respect to any one taxable year, to make one capital gain dividend, as defined in section 852(b)(3)(C) of the Internal Revenue Code of 1986, as amended (the ''Code''). Rule 19b–1(a) also permits a supplemental distribution to be made pursuant to section 855 of the Code not exceeding 10% of the total amount distributed for the year. Rule 19b–1(f) permits one additional long-term capital gains distribution to be made to avoid the excise tax under section 4982 of the Code.

2. Applicant submits that rule 19b–1, by limiting the number of net long-term capital gains distributions that Applicant may make in any one year, prevents the routine inclusion over the course of Applicant's taxable year of realized long-term capital gains in quarterly distributions made under the Distribution Policy. Applicant states that rule 19b–1 thus may force the fixed quarterly distributions to be funded with returns of capital to the extent net investment income and realized net short-term capital gains are insufficient to fund the distribution, even though realized net long-term capital gains would otherwise be available. Applicant also submits that the tax rules require the total annual return of capital to be distributed so that the amounts constitute the same proportion of each of the four distributions. This results in having long-term capital gains in excess of the fixed quarterly distribution either added to one of the permitted capital gains distributions, thus exceeding the total annual amount called for by the Distribution Policy, or retained by Applicant (with Applicant paying taxes thereon). Applicant believes that the application of rule 19b–1 to its Distribution Policy may create pressure to limit the realization of long-term capital gains to the total amount of the fixed quarterly distributions that under the rule may include long-term capital gains.

3. Applicant also submits that one of the concerns leading to the adoption of rule 19b–1 was that shareholders might be unable to distinguish between frequent distributions of capital gains and dividends from investment income. Applicant states that its Distribution Policy, including the fact that the distributions called for by the Distribution Policy may include returns of capital to the extent that Applicant's net investment income and net long-term realized capital gains are insufficient to satisfy its distribution obligation, is and will continue to be described in periodic communications. Applicant further states that in accordance with rule 19a–1 under the Act a separate statement showing the source of the distribution (*i.e.*, net investment income, net realized capital gains or return of capital) will continue to accompany each distribution that Applicant makes to its shareholders (or the confirmation of the reinvestment thereof under Applicant's dividend reinvestment plan) that is not from Applicant's net investment income. In addition, a statement showing the amount and source of each distribution during each calendar year will be included with the Applicant's IRS Form 1099–DIV reports of distributions for that year and sent to shareholders of record who received distributions during the year (including shareholders who have sold shares during the year).

4. Applicant states that another concern that led to the adoption of Section 19(b) of the Act and rule 19b–1 was that frequent capital gains distributions could facilitate improper fund distribution practices, including, in particular, the practice of urging an investor to purchase fund shares on the basis of an upcoming dividend (''selling the dividend''), where the dividend results in an immediate corresponding reduction in net asset value and is in effect a return of the investor's capital. Applicant states that this concern does not apply to closed-end investment companies, such as Applicant, which do not continuously distribute shares. Applicant also states that the condition to the requested relief would further assure that the concern about selling the dividend would not arise in connection with a rights offering by the Applicant. Applicant further states that any transferable rights offering by Applicant will comply with all Commission and staff guidelines. Applicant states that in determining compliance with these guidelines, the Board will consider, among other things, the brokerage commissions that would be paid in connection with the offering. Applicant

states that any such offering by Applicant of transferable rights will also comply with any applicable rules of the National Association of Securities Dealers, Inc. regarding the fairness of compensation.

5. Applicant states that increased administrative costs also is a concern underlying section 19(b) and rule 19b–1. Applicant asserts that the anticipated benefits to its shareholders are such that Applicant will continue to make quarterly distributions regardless of what portion thereof is composed of long-term capital gains.

6. Section 6(c) of the Act provides that the Commission may exempt any person or transaction from any provision of the Act or from any rule under the Act to the extent that such exemption is necessary or appropriate in the public interest and consistent with the protection of investors and the purposes fairly intended by the policy and provisions of the Act. For the reasons stated above, Applicant believes that the requested relief satisfies this standard and would be in the best interests of Applicant and its shareholders.

**Applicant's Condition**

Applicant agrees that any order granting the requested relief shall terminate upon the effective date of a registration statement under the Securities Act of 1933 for any future public offering by Applicant of its shares other than:

(i) A rights offering to holders of Applicant's common stock, in which (a) shares are issued only within the six-week period immediately following the record date of a quarterly dividend, (b) the prospectus for the rights offering makes it clear that shareholders exercising rights will not be entitled to receive such dividend, and (c) Applicant has not engaged in more than one rights offering during any given calendar year; or

(ii) An offering in connection with a merger, consolidation, acquisition, spin-off or reorganization of Applicant; unless Applicant has received from the staff of the Commission written assurance that the order will remain in effect.

For the Commission, by the Division of Investment Management, pursuant to delegated authority.

**Margaret H. McFarland,**

*Deputy Secretary.*

[FR Doc. 02–23815 Filed 9–18–02; 8:45 am]

**BILLING CODE 8010–01–P**

## SECURITIES AND EXCHANGE COMMISSION

**[Release No. 34–46496; File No. SR–BSE–2002–10]**

## Self-Regulatory Organizations; Notice of Filing of Proposed Rule Change and Amendment Nos. 1 and 2 by the Boston Stock Exchange, Inc. To Eliminate Its Current Market Data Revenue Sharing Program and Establish Two New Market Data Revenue Sharing Programs

September 13, 2002.

Pursuant to section 19(b)(1) of the Securities Exchange Act of 1934 (''Act''),[1] and Rule 19b–4 thereunder,[2] notice is hereby given that on July 22, 2002, the Boston Stock Exchange, Inc. (''BSE'' or ''Exchange'') filed with the Securities and Exchange Commission (''Commission'' or ''SEC'') the proposed rule change as described in Items I, II, and III below, which Items have been prepared by the Exchange. The BSE amended the proposed rule change on August 2, 2002.[3] On August 20, 2002, the BSE again amended the proposed rule change.[4] The Commission is publishing this notice to solicit comments on the proposed rule change, as amended, from interested persons.

### I. Self-Regulatory Organization's Statement of the Terms of Substance of the Proposed Rule Change

The BSE seeks to amend its Transaction Fee Schedule to eliminate its current revenue sharing program and replace it with two new revenue sharing programs. The text of the proposed rule change is available at the BSE and at the Commission.

### II. Self-Regulatory Organization's Statement of the Purpose of, and Statutory Basis for, the Proposed Rule Change

In its filing with the Commission, the Exchange included statements concerning the purpose of and basis for the proposed rule change and discussed any comments it received on the proposed rule change. The text of these statements may be examined at the places specified in Item IV below. The Exchange has prepared summaries, set forth in sections A, B, and C below, of the most significant aspects of such statements.

*A. Self-Regulatory Organization's Statement of the Purpose of, and the Statutory Basis for, the Proposed Rule Change*

1. Purpose

The purpose of the proposed rule change is to amend the Exchange's Transaction Fee Schedule by eliminating the BSE's current revenue sharing program and replacing it with two new revenue sharing programs that would allow the Exchange to continue to provide quality markets to its customers at competitive prices. The Exchange believes that its current revenue sharing program, which shares a portion of all transaction related fees, is too broad in scope and difficult for its customers to understand. By implementing a more clearly defined comprehensive program, the Exchange seeks to narrow and simplify its Transaction Fee Schedule for its customers. The Exchange is seeking to implement these new programs on a pilot basis, for an initial period of six months.

Under the Exchange's existing revenue sharing program, the amount of revenue to be shared is determined by the total amount of transaction related revenue (Value Charge fees, Trade Recording Fees, Specialist Transaction fees, Consolidated Tape revenue and Net ITS fees) the Exchange generates on a monthly basis. Once the Exchange generates $1,700,000 in monthly transaction revenue, 50% of the revenue above this amount is shared with those firms that have generated $50,000 in monthly-automated transaction revenue. The $50,000 cap is reviewed as necessary by the Executive Committee of the Board of Governors and adjusted as required to meet the costs of operating the trading floor. Each firm that reaches the $50,000 cap receives a pro-rata share of the excess revenue based on the total number of Exchange automated executions executed by those firms that reach the cap. However, if the Exchange does not attain its monthly revenue goal, no revenue is shared for that month.

The Exchange is seeking to replace the current revenue sharing program with a simpler, more comprehensive, two-part revenue sharing program. The first part of this program proposes to

[1] 15 U.S.C. 78s(b)(1).

[2] 17 CFR 240.19b–4.

[3] *See* August 1, 2002 letter from John A. Boese, Assistant Vice President (''AVP''), Legal and Regulatory, BSE, to Nancy Sanow, Assistant Director, Division of Market Regulation (''Division''), SEC, and attachments (''Amendment No. 1''). Although Amendment No. 1 makes no substantive changes to the original filing, Amendment No. 1 completely replaces and supersedes the original filing, so as to ensure that the proposed rule change is in proper format.

[4] *See* August 19, 2002 letter from John A. Boese, AVP, Legal and Regulatory, BSE, to Nancy Sanow, Assistant Director, Division, SEC, and attachments (''Amendment No. 2''). Amendment No. 2 completely replaces and supersedes Amendment No. 1 and the original proposed rule change.

share 50% of all monthly net Tape A (NYSE) revenues in excess of a threshold amount with those firms that generate a minimum of $50,000 in overall monthly automated BSE transaction fees.[5] The threshold amount will be periodically reviewed by the Executive Committee of the Board of Governors and adjusted as required to meet the costs of operating the Exchange. In no case, however, will the threshold amount be less than $250,000.00, as the cost of operating the Exchange, given current and forecasted revenue, expenses and costs, will not be less than this amount.

Although Tape A revenues are received quarterly, for the purpose of this program, the net amount received each quarter will be divided in three (for each month of that quarter) and the determination of the credit will be calculated for each individual month in the quarter. Only those firms that are eligible in any particular month will receive their pro-rata portion of the credit based on the total number of Exchange executions executed by those firms that generate $50,000 in BSE automated transaction fees for that month. All credits will be calculated monthly but will be distributed quarterly.

The application of the credit can be demonstrated by the following example:

• Suppose the Exchange generates $1,500,000 in net Tape A revenues for the quarter and the monthly threshold amount the BSE must generate is $350,000.

—BSE Net Tape A revenues for the quarter—$1,500,000
—Less: Quarterly threshold (as determined by the executive committee, but not less than $250,000 per month). Therefore, the monthly threshold of $350,000 is multiplied by 3, for each month of the quarter, for a total of $1,050,000—($1,050,000)
—Subtotal (net revenue minus quarterly threshold)—$450,000
—Multiply the subtotal by 50% (percentage of revenue to be shared among qualifying firms)—$225,000
—Divide by 3, to reach the amount of revenue to be shared per month among qualifying firms ($225,000/3)—$ 75,000

• Now assume that four retail firms each generate a minimum of $50,000 in automated BSE transaction fees (making them eligible to participate in the program) the first month of the quarter. The number of Exchange Tape A executions each qualifying firm executes for the month are as follows:

| | |
|---|---|
| Firm A | 50,000 trades. |
| Firm B | 125,000 trades. |
| Firm C | 75,000 trades. |
| Firm D | 25,000 trades. |
| Total | 375,000 trades. |

• Each qualifying firm would now receive Tape A revenue sharing amounts equal to their percentage of the total trades:

—Firm A percentage (150,000 trades/375,000 total qualifying trades)—40%
—Firm B percentage (125,000 trades/375,000 total qualifying trades)—33%
—Firm C percentage (75,000 trades/375,000 total qualifying trades)—20%
—Firm D percentage (25,000 trades/375,000 total qualifying trades)—7%

• The dollar amount of Tape A revenues to be shared amongst each qualifying firm for the first month of the quarter is arrived at by multiplying each qualifying firm's percentage of qualifying trades times the revenue available to be shared for that month. In this example, the available monthly revenue to be shared is $75,000 (see above):

—Firm A (40% × $75,000)—$30,000
—Firm B (33% × $75,000)—$25,000
—Firm C (20% × $75,000)—$15,000
—Firm D (7% × $75,000)—$5,000

• The same process would be followed for any subsequent months of the quarter in which there are firms which meet the qualifying threshold (*i.e.* $50,000 in automated BSE transaction fees for that month), although the percentages and amount of revenue to be shared among the qualifying firms would change as applicable.

The second program proposes to share 50% of the net Tape B (AMEX) revenue per trade with those firms that route Tape B business to the Exchange. The amount eligible to be shared with customers will be based on the BSE's receipt of its distribution of quarterly Tape B revenue. There are no thresholds to meet, and the formula for revenue sharing is a simple 50% distribution of net Tape B revenues, as demonstrated by the following example:

• Assume that the BSE receives $90,000 in Tape B revenue for the month of January, and executed a total of 25,000 Tape B trades for the month.

—BSE revenue in Tape B for the month—$90,000
—Less monthly licensing fees for various Tape B Products (*e.g.* QQQ, SPY, DIA, MDY)—($35,000)
—Total net monthly Tape B revenue—$55,000
—Total BSE Tape B trades for the month—25,000
—Net Tape B revenue per trade (total net monthly revenue divided by total Tape B trades for the month, or $55,000/25,000)—$2.20
—Multiply net revenue per trade by 50% (proposed Tape B revenue sharing) to reach the total amount of available credit per trade to be shared—$1.10

2. Statutory Basis

The BSE believes that the proposed rule change is consistent with section 6(b)(5) of the Act,[6] in that it is designed to promote just and equitable principles of trade, to foster cooperation and coordination with persons engaged in regulating securities transactions, to remove impediments to and perfect the mechanism of a free and open market and a national market system and, in general, to protect investors and the public interest.

*B. Self-Regulatory Organization's Statement on Burden on Competition*

The Exchange does not believe that the proposed rule change will impose any burden on competition that is not necessary or appropriate in furtherance of the purposes of the Act.

*C. Self-Regulatory Organization's Statement on Comments on the Proposed Rule Change Received From Members, Participants or Others*

No written comments were either solicited or received.

**III. Date of Effectiveness of the Proposed Rule Change and Timing for Commission Action**

Within 35 days of the date of publication of this notice in the **Federal Register** or within such longer period (i) as the Commission may designate up to 90 days of such date if it finds such longer period to be appropriate and publishes its reasons for so finding or (ii) as to which the BSE consents, the Commission will:

A. By order approve such proposed rule change, or

B. Institute proceedings to determine whether the proposed rule change should be disapproved.

[5] The automated BSE transaction fees are generated based on executions that take place on the BSE. These charges vary on the size of the execution. For example, all BSE executions of market and marketable limit executions up to and including 2,500 shares are not charged a transaction fee. All other BSE executions up to and including 2,500 shares are charged $.020 per 100 shares, which is reduced to $.035 per 100 shares if the member firm generates at least $50,000 in automated BSE transaction fees. All other executions are charged on a ''sliding scale'' of $1,000 contract value, from $.01 per $1,000 contract value, up to $.16 per $1.000 contract value, based on the dollar value of the executions generated by that firm per month.

[6] 15 U.S.C. 78f(b)(5).

## IV. Solicitation of Comments

On July 2, 2002, the Commission issued an Order abrogating certain proposed rule changes relating to market data revenue sharing programs.[7] In that Order, the Commission expressed concern that the subject proposed rule changes raised ''serious questions as to whether they are consistent with the Act and with the protection of investors.'' Specifically, the Commission questioned the effect of market data rebates on the accuracy of market data, and on the regulatory functions of self-regulatory organizations.

The Commission now solicits comment on the BSE proposed rule change, and in general, on (1) market data fees; (2) the collection of market data fees; (3) the distribution of market data rebates; (4) the effect of market data revenue sharing programs on the accuracy of market data; and (5) the impact of market data revenue sharing programs on the regulatory functions of self-regulatory organizations.

Interested persons are invited to submit written data, views and arguments concerning the foregoing, including whether the proposed rule change is consistent with the Act. Persons making written submissions should file six copies thereof with the Secretary, Securities and Exchange Commission, 450 Fifth Street, NW., Washington, DC 20549–0609. Copies of the submission, all subsequent amendments, all written statements with respect to the proposed rule change that are filed with the Commission, and all written communications relating to the proposed rule change between the Commission and any person, other than those that may be withheld from the public in accordance with the provisions of 5 U.S.C. 552, will be available for inspection and copying in the Commission's Public Reference Room. Copies of such filing will also be available for inspection and copying at the principal office of the BSE. All submissions should refer to file number SR–BSE–2002–10 and should be submitted by October 21, 2002.

For the Commission, by the Division of Market Regulation, pursuant to delegated authority.[8]

**Margaret H. McFarland,**

*Deputy Secretary.*

[FR Doc. 02–23814 Filed 9–18–02; 8:45 am]

BILLING CODE 8010–01–P

[7] Securities Exchange Act Release No. 46159 (July 2, 2002), 67 FR 45775 (July 10, 2002) (File Nos. SR–NASD–2002–61, SR–NASD–2002–68, SR–CSE–2002–06, and SR–PCX–2002–37)(Order of Summary Abrogation).

[8] 17 CFR 200.30–3(a)(12).

## DEPARTMENT OF STATE

**[Public Notice 4127]**

### Department of State Performance Review Board Members (At-Large Board)

In accordance with Section 4314(c)(4) of the Civil Service Reform Act of 1978 (Pub. L. 95–454), the Executive Resources Board of the Department of State has appointed the following individuals to the Department of State Performance Review Board (At-Large):

Christopher H. Flaggs, Managing Director, Office of Financial Policy, Reporting and Analysis, Bureau of Resource Management, Department of State;

Janice H. Brambilla, Senior Advisor, Office of the Under Secretary for Public Diplomacy And Public Affairs, Department of State;

David S. Mathias, Assistant Legal Adviser, Office of the Legal Adviser, United Nations Affairs, Department of State;

Barry L. Wells, Deputy Director, Foreign Service Institute, Department of State; Cathleen E. Lawrence, Executive Director, Bureau of Nonproliferation, Department of State;

Lawrence R. Baer, Executive Director, Bureau of East Asian and Pacific Affairs, Department of State.

Dated: September 13, 2002.

**Linda S. Taglialatela,**

*Deputy Assistant Secretary, Bureau of Human Resources, Department of State.*

[FR Doc. 02–23810 Filed 9–18–02; 8:45 am]

BILLING CODE 4710–15–P

## OFFICE OF THE UNITED STATES TRADE REPRESENTATIVE

### Request for Comments and Notice of Public Hearing Concerning Market Access in the Doha Development Agenda Negotiations in the World Trade Organization (WTO)

**AGENCY:** Office of the United States Trade Representative.

**ACTION:** Request for comments and notice of public hearing concerning market access and services issues in the WTO Doha Development Agenda negotiations.

**SUMMARY:** The interagency Trade Policy Staff Committee (TPSC) will convene public hearings Monday, October 21 and Wednesday November 6 to obtain public comment on the effects of the reduction of tariffs and nontariff barriers to trade in agriculture and non-agricultural goods and services, and other market liberalization among WTO members in the Doha Development Agenda negotiations. Comments submitted pursuant to an earlier **Federal Register** notice need not be resubmitted in response to this Notice.

**DATES:** Persons wishing to testify orally at the hearing on agricultural and non-agricultural goods market access must provide written notification of their intention, as well as their testimony, by Wednesday, October 9, 2002. A hearing on agricultural and non-agricultural goods market access will be held in Washington, DC, beginning on Monday, October 21, 2002 and will continue as necessary on subsequent days. Persons wishing to testify orally at the hearing on services market access must provide written notification of their intention, as well as their testimony, by Monday, October 28, 2002. A hearing for services will be held in Washington, DC, beginning on Wednesday November 6, 2002, and will continue as necessary on subsequent days. Written comments on all issues are due by noon, Friday November 8, 2002.

**ADDRESSES:** *Submissions by electronic mail:*

*FR0032@ustr.gov* (Notice of intent to testify and written testimony for non-agricultural and agricultural goods);

*FR0033@ustr.gov* (Notice of intent to testify and written testimony for services);

*FR0035@ustr.gov* (written comments for agriculture, non-agriculture goods, and services).

*Submissions by facsimile:* Gloria Blue, Executive Secretary, Trade Policy Staff Committee, at 202/395–6143.

The public is strongly encouraged to submit documents electronically rather than by facsimile. (See requirements for submissions below.)

**FOR FURTHER INFORMATION CONTACT:** For procedural questions concerning written comments or participation in the public hearing, contact Gloria Blue, (202) 395–3475. Further information on the World Trade Organization and can be obtained via Internet at the WTO Web site *www.wto.org,* the Office of the U.S. Trade Representative at *www.ustr.gov.* Questions on WTO agriculture negotiations should be directed to Jason

Hafemeister, Director for WTO Agriculture Negotiations, (202) 395–5124. Questions on WTO non-agricultural market access negotiations should be directed to Paul Moore, Director for Market Access, (202) 395–5656. Questions on WTO services negotiations should be directed to Peter Collins, Deputy Assistant USTR for Services, (202) 395–7271.

**SUPPLEMENTARY INFORMATION:**

**1. Background**

The TPSC has sought comments regarding the subject matter of these negotiations in three earlier solicitations: (1) Public Comments Regarding the Doha Multilateral Trade Negotiations and Agenda in the World Trade Organization, 67 FR 12637, March 19, 2002; (2) Public Comments on Preparations for the Fourth Ministerial Conference of the World Trade Organization, November 9–13, 2001 in Doha, Qatar, 66 FR 18142, April 5, 2001; and (3) Public Comments for Mandated Multilateral Trade negotiations on Agriculture and Services in the WTO and Priorities for Future Market Access Negotiations on Non-Agricultural Products, 65 FR 16450, March 28, 2000. Supplementary or new submissions on these topics are welcome, but comments submitted pursuant to an earlier notice need not be resubmitted. The TPSC will review supplemental or new comments together with earlier submissions in developing positions.

The Doha Development Agenda agreed to at the WTO's Fourth Ministerial Meeting and set out in the Doha Declaration establishes a negotiating agenda that is to be accomplished within three years (*i.e.*, not later than January 1, 2005), and sets out a certain number of issues to be considered further at the next ministerial meeting of the WTO scheduled for September 10–14, 2003.

The U.S. International Trade Commission (ITC) has provided to the TPSC the public comments received on agricultural and non-agricultural products as part of its investigation (Investigation No. 332–405), Probable Economic Effects on Reduction or Elimination of U.S. Tariffs (November 1999 (Confidential report)). On February 11, 2002, the U.S. Trade Representative requested that the ITC update its advice. The ITC instituted an investigation to update its advice (Investigation No. 332–440, Probable Effect of the Reduction or Elimination of U.S. Tariffs) on February 28, 2002 and published its Notice of Institution in 67 FR 10576, March 8, 2002. The ITC will again provide the public comments received as part of its investigation to the TPSC so these comments need not be resubmitted separately to the TPSC. By separate notices request for public comment will be solicited regarding an environmental review and a review of the impact on U.S. employment, including labor markets, of any agreement that may result from the negotiations launched by the Doha Declaration. For ease of submission, the TPSC has identified the following headings under which comments may be submitted. Submissions should identify the relevant subject area or areas to which comments apply. These include:

*(A) Agriculture*

The mandated negotiations in agriculture address agricultural goods from Chapters 1–24, except for fish and fish products; 2905.43 (mannitol); 2905.44 (sorbitol); 3301 (essential oils); 3501–3505 (albuminoidal substances, modified starches, glues); 3809.10 (finishing agents); 3823.60 (sorbitol n.e.p.); 4101–4103 (hides and skins); 4301 (raw furskins); 5001–5003 (raw silk and silk waste); 5101–5103 (wool and animal hair); 5201–5203 (raw cotton, waste and cotton carded or combed); 5301 (raw flax); and 5302 (raw hemp), as specified by the Agreement on Agriculture.

The Doha Declaration outlines the following three objectives of the agriculture negotiations: substantial improvements in market access; reduction, with a view to phasing out, all forms of export subsidies; and, substantial reductions in domestic support. Market access issues for negotiation include tariffs, tariff-rate quotas, tariff administration, and import state trading enterprises. Domestic support issues include trade-distorting support and non-trade distorting support. Finally, export competition includes issues such as export subsidies, export credits, export state trading enterprises, food aid, and export taxes and restrictions. In addition, comments on sectoral initiatives and rules and disciplines affecting trade in agricultural goods are welcome.

Respondents are requested to provide as much specificity as possible on a commodity and country-specific level focusing on trade interests and barriers. To the maximum extent possible, commodities should be identified by the Harmonized System nomenclature at the 6-digit level and for specific markets of interest. The Doha Declaration calls for agreement on modalities for the negotiations to be reached by March 31, 2003, and the submission of initial schedules by the fifth WTO Ministerial meeting, scheduled for September 10—14, 2003. A helpful supplement to the written statement would be the provision of a document in electronic format containing as much of the technical details as possible, either in a spreadsheet format or in a word processing table format, with each tariff line in a separate cell. This document should be transmitted via e-mail and should be labeled and should clearly identify the software used and the respondent. The e-mail should be sent to *FR0035@ustr.gov.*

*(B) Services*

For services, topics for negotiating objectives include removal or reduction of barriers to U.S. services exports under existing GATS disciplines; establishment of new GATS disciplines to ensure effective market access, *e.g.*, proposed disciplines on domestic regulations on services, possibly addressing transparency and necessity; and clarification of sectoral definitions in the Agreement. The United States submitted its initial requests for specific commitments on July 1, 2002 and intends to submit its initial offer by the scheduled deadline of March 31, 2003.

Services sectors under consideration in the negotiations include: (1) Business services (including professional and related services such as legal, accounting, auditing and bookkeeping, taxation, medical, dental, veterinary, engineering, architectural, and urban planning services), computer and related services, research and development services, real estate services, rental and leasing services, and advertising and management services; (2) communication services (including telecommunications services, audiovisual services, express delivery services); (3) construction and related engineering services; (4) distribution services (including wholesale, retail, and franchising services); (5) educational and training services; (6) environmental services; (7) energy services; (8) financial services, including insurance and insurance-related services, banking and securities services; (9) health-related and social services; (10) tourism and travel-related services; (11) recreational, cultural and sporting services; and (12) transport services. Comments on services in response to this notice should include, wherever appropriate, sector-specific priorities by country. A helpful supplement to the written statement would be the provision of a document in electronic format transmitted via e-mail containing as much of the technical details as possible, either in a spreadsheet format or in a word processing table format, with each

services sector in a separate cell. This e-mailed document should be labeled and should clearly identify the software used and the respondent. Send the e-mail to FR0035@ustr.gov.

*(C) Non-Agricultural or Industrial Market Access*

Comments are welcome with as much specificity as the respondent can provide on general negotiating objectives and/or targets; country- and product-specific export interests or barriers; and particular measures that might be improved in the context of the new negotiations, including both tariffs and non-tariff measures (NTMs). With regard to NTMs, any available details on the foreign laws or regulations that lie behind the barrier would also be helpful. To the maximum extent possible, commodities should be identified by Harmonized System nomenclature at the 6-digit level, (or preferably 8-digit level or higher, where available) and should specify markets of interest. WTO members have agreed in the workplan for non-agricultural market access to seek to reach a common understanding on a possible outline of modalities for non-agricultural market access by the end of March 2003 with a view to reaching an agreement on those modalities by May 31, 2003.

Specific comments on possible approaches to negotiations are invited (*i.e.*, sectoral initiatives such as zero-for-zero or harmonization approaches, request/offer and formula methodologies, and approaches that address the interests of small- and medium-sized enterprises). Comments should also encompass the priorities and methodologies for the negotiation of environmental goods identified in the Doha Declaration under the heading of Trade and the Environment. A helpful supplement to the written statement would be the provision of a document in electronic format transmitted via e-mail containing as much of the technical details as possible, either in a spreadsheet format or in a word processing table format, with each tariff line in a separate cell. This e-mailed document should be labeled and should clearly identify the software used and the respondent. The e-mail should be sent to *FR0035@ustr.gov.*

*(D) Other Market Access Issues*

Comments are welcome with as much specificity as the respondent can provide on general negotiating objectives and/or targets; country- and product-specific export interests or barriers; and particular measures that might be improved in the context of other market access issues, including government procurement particularly with respect to current Members of the plurilateral Government Procurement Agreement. The e-mail should be sent to *FR0035@ustr.gov.*

**2. Public Comments and Testimony**

As provided in the regulations of the TPSC (15 CFR part 2003), the Chairman of the TPSC invites written comments and/or oral testimony of interested parties at a public hearing. Comments and testimony may address the reduction or elimination of tariffs or non-tariff barriers on any articles provided for in the HTSUS that are products of a WTO member country, any concession which should be sought by the United States, or any other matter relevant to the market access and services negotiations in the Doha Development Agenda negotiations. The TPSC invites comments and testimony on all of these matters, and in light of the schedule for presenting market access offers, in particular seeks comments and testimony addressed to:

(a) Economic benefits and costs to U.S. producers and consumers of the reduction of tariffs or non-tariff barriers on trade between the United States and other WTO members, and the recommended staging schedule for reduction.

(b) Existing nontariff barriers to trade in goods between United States and other WTO members and the economic benefits and costs of removing those barriers.

(c) Existing barriers to trade in services between the United States and other WTO members and the economic benefits and costs of removing such barriers.

As previously noted, a hearing will be held on Monday, October 21, 2002 for agricultural and non-agricultural goods market access, and will continue as necessary on subsequent days, in Rooms 1 and 2 at 1724 F Street, NW., Washington, DC 20508. A hearing will be held at the same location on Wednesday, November 6, 2002 for services market access and will continue as necessary on subsequent days. Persons wishing to testify at the agricultural and non-agricultural goods market access hearing must provide written notification of their intention by Friday, October 11, 2002. Persons wishing to testify at the services market access hearing must provide written notification of their intention by Monday, October 28, 2002. The notification should include: (1) The name, address, and telephone number of the person presenting the testimony; and (2) a short (one or two paragraph) summary of the presentation, including the subject matter and, as applicable, the product(s) (with HTSUS numbers) and/or service sector(s) to be discussed. A copy of the testimony must accompany the notification. Remarks at the hearing should be limited to no more than five minutes to allow for possible questions from the TPSC. Persons with mobility impairments who will need special assistance in gaining access to the hearing should contact Gloria Blue. Interested persons, including persons who participate in the hearing, may submit written comments by noon, Friday November 8, 2002. Written comments may include rebuttal points demonstrating errors of fact or analysis not pointed out in the hearing. All written comments must state clearly the position taken, describe with particularity the supporting rationale, and be in English. The first page of written comments must specify the subject matter including, as applicable, the product(s) (with HTSUS numbers) or service sector(s).

**3. Requirements for Submissions**

In order to facilitate prompt processing of submissions, the Office of the United States Trade Representative strongly urges and prefers electronic (e-mail) submissions in response to this notice. In the event that an e-mail submission is impossible, submissions should be made by facsimile.

Persons making submissions by e-mail should use the following subject line: ''WTO Market Access'' followed by (as appropriate) ''Agriculture'', ''Non-Agriculture'', ''Services'', or ''Other'' and ''Notice of Intent to Testify'', ''Testimony'', or ''Written Comments.'' Documents should be submitted as either WordPerfect, MSWord, or text (.TXT) files. Supporting documentation submitted as spreadsheets are acceptable as Quattro Pro or Excel. For any document containing business confidential information submitted electronically, the file name of the business confidential version should begin with the characters ''BC–'', and the file name of the public version should begin with the characters ''P–''. The ''P–'' or ''BC–'' should be followed by the name of the submitter. Persons who make submissions by e-mail should not provide separate cover letters; information that might appear in a cover letter should be included in the submission itself. To the extent possible, any attachments to the submission should be included in the same file as the submission itself, and not as separate files.

Written comments, notice of testimony, and testimony will be placed

in a file open to public inspection pursuant to 15 CFR 2003.5, except business confidential information exempt from public inspection in accordance with 15 CFR 2003.6. Business confidential information submitted in accordance with 15 CFR 2003.6 must be clearly marked ''BUSINESS CONFIDENTIAL'' at the top of each page, including any cover letter or cover page, and must be accompanied by a nonconfidential summary of the confidential information. All public documents and nonconfidential summaries shall be available for public inspection in the USTR Reading Room. The USTR Reading Room is open to the public, by appointment only, from 10 a.m. to 12 noon and 1 p.m. to 4 p.m., Monday through Friday. An appointment to review the file may be made by calling (202) 395–6186. Appointments must be scheduled at least 48 hours in advance.

General information concerning the Office of the United States Trade Representative may be obtained by accessing its Internet server (*www.ustr.gov*).

**Carmen Suro-Bredie,**

*Chairman, Trade Policy Staff Committee.*

[FR Doc. 02–23846 Filed 9–18–02; 8:45 am]

**BILLING CODE 3190–01–P**

## DEPARTMENT OF TRANSPORTATION

### Federal Aviation Administration

### Notice of Intent To Request Renewal From the Office of Management and Budget (OMB) of Two Current Public Collections of Information

**AGENCY:** Federal Aviation Administration (FAA), DOT.

**ACTION:** Notice.

**SUMMARY:** In compliance with the Paperwork Reduction Act (44 U.S.C. 3501 *et seq.*), the FAA invites public comment on two currently approved public information collections which will be submitted to OMB for renewal.

**DATES:** Comments must be received on or before November 18, 2002.

**ADDRESSES:** Comments may be mailed or delivered to the FAA at the following address: Ms. Judy Street, Room 613, Federal Aviation Administration, Standards and Information Division, APF–100, 800 Independence Ave., SW., Washington, DC 20591.

**FOR FURTHER INFORMATION CONTACT:** Ms. Judy Street at the above address or on (202) 267–9895.

**SUPPLEMENTARY INFORMATION:** In accordance with the Paperwork Reduction Act of 1995, an agency may not conduct or sponsor, and a person is not required to respond to a collection of information unless it displays a currently valid OMB control number. Therefore, the FAA solicits comments on the following current collections of information in order to evaluate the necessity of the collection, the accuracy of the agency's estimate of the burden, the quality, utility, and clarity of the information to be collected, and possible ways to minimize the burden of the collection in preparation for submission to renew the clearances of the following information collections.

1. 2120–0049, Agricultural Aircraft Operator Certificate Application. Standards have been established for operation of agricultural aircraft and for the dispensing of chemicals, pesticides, and toxic substances. The information collected is used to determine the applicant's compliance with FAA regulations and eligibility for certification by the FAA. The current estimated annual reporting burden is 14,037 hours.

2. 2120–0552, Suspected Unapproved Parts Notification. The information collected is reported voluntarily by manufacturers, repair stations, aircraft owners/operators, air carriers, and the general public who wish to report suspected unapproved parts to the FAA for review. This information is used to determine if an unapproved part investigation is warranted. The current estimated annual reporting burden is 60 hours.

Issued in Washington, DC, on September 13, 2002.

**Judith D. Street,**

*FAA Information Collection Clearance Officer, APF–100.*

[FR Doc. 02–23835 Filed 9–18–02; 8:45 am]

**BILLING CODE 4910–13–M**

## DEPARTMENT OF TRANSPORTATION

### Federal Highway Administration

### Environmental Impact Statement: U.S. 12—Fort Atkinson Area, Jefferson, Rock, and Walworth Counties, WI

**AGENCY:** Federal Highway Administration (FHWA), Wisconsin Department of Transportation (WisDOT).

**ACTION:** Notice of intent to prepare an environmental impact statement.

**FOR FURTHER INFORMATION, CONTACT:**

Mr. Johnny Gerbitz, Field Operations Engineer, Federal Highway Administration, 567 D'Onofrio Drive, 53719–2814, Madison, WI 5 608–829–7511.

Ms. Carol Cutshall, Director, WisDOT Bureau of Environment, 4802 Sheboygan Ave., Room 451, Madison, WI 3707, 608–266–9626.

**SUMMARY:** The FHWA is issuing this notice to advise the public that an environmental impact statement will be prepared for a proposed highway project in Jefferson, Rock and Walworth Counties, Wisconsin.

**SUPPLEMENTARY INFORMATION:** The FHWA, in cooperation with the Wisconsin Department of Transportation (WisDOT) is issuing this notice to advise the public that an Environmental Impact Statement (EIS) will be prepared for construction impacts of improvements to U.S. Highway 12 (US 12) in the Fort Atkinson area of Wisconsin. There are currently seven alternatives being considered for the improvements. The project alternatives include: (1) The no build and, (2) improve existing U.S. 12, (3) improve existing County ''N'' in Rock County and County ''S'' in Walworth County, (4) improve existing County ''N'' in Jefferson County and, (5) a near east Fort Atkinson bypass, (6) a near south Fort Atkinson bypass and, (7) a south of Fort Atkinson bypass. The EIS is being prepared in conformance with 40 CFR Part 1500 and the FHWA regulations.

Letters describing the proposed action and soliciting comments will be sent to appropriate Federal, State, and local agencies and to private organization and citizens who have previously expressed or are known to have interest in this proposal. Initial scoping for the project is planned with a formal agency scoping meeting as well as a public information meeting to be scheduled in October 2002. Additional scoping is anticipated through small local group and agency meetings throughout the study process. The draft EIS will be available for public and agency review and comment prior to the public hearing.

To ensure that the full range of issues related to this proposed action are addressed and all significant issues identified, comments and suggestions are invited from all interested parties. Comments or questions concerning this proposed action and the EIS should be directed to one of the addresses provided above.

Federal law prohibits discrimination on the basis of race, color, age, sex, or country of national origin in the implementation of this action. It is also Federal policy that no group of people bears the negative consequences of this action in a disproportionately high and

adverse manner without adequate mitigation.

(Catalog of Federal Domestic Assistance Program Number 20.205, Highway Planning and Construction. The regulations implementing Executive Order 12372 regarding intergovernmental consultation on Federal programs and activities apply to this program.)

Issued on: September 12, 2002.

**Jaclyn Lawton,**

*Environmental Programs Engineer, Wisconsin Division.*

[FR Doc. 02–23778 Filed 9–18–02; 8:45 am]

**BILLING CODE 4910–22–P**

## DEPARTMENT OF TRANSPORTATION

### Research and Special Programs Administration

### Office of Hazardous Materials Safety

### Notice of Applications for Modification of Exemption

**AGENCY:** Research and Special Programs Administration, DOT.

**ACTION:** List of applications for modification of exemptions.

**SUMMARY:** In accordance with the procedures governing the application for, and the processing of, exemption from the Department of Transportation's Hazardous Materials Regulations (49 CFR Part 107, Subpart B), notice is hereby given that the Office of Hazardous Materials Safety has received the applications described herein. This notice is abbreviated to expedite docketing and public notice. Because the sections affected, modes of transportation, and the nature of application have been shown in earlier **Federal Register** publications, they are not repeated here. Requests for modifications of exemptions (*e.g.,* to provide for additional hazardous materials, packaging design changes, additional mode of transportation, *etc.*) are described in footnotes to the application number. Application numbers with the suffix ''M'' denote a modification request. These applications have been separated from the new applications for exemptions to facilitate processing.

**DATES:** Comments must be received on or before (15 days after publication).

**ADDRESS COMMENTS TO:** Records Center, Research and Special Programs, Administration, U.S. Department of Transportation, Washington, DC 20590.

Comments should refer to the application number and be submitted in triplicate. If confirmation of receipt of comments is desired, include a self-addressed stamped postcard showing the exemption number.

**FOR FURTHER INFORMATION CONTACT:** Copies of the applications are available for inspection in the Records Center, Nassif Building, 400 7th Street SW., Washington, DC or at *http://dms.dot.gov.*

This notice of receipt of applications for modification of exemptions is published in accordance with Part 107 of the Federal Hazardous Materials Transportation Law (49 U.S.C. 5117(b); 49 CFR 1.53(b)).

Issued in Washington, DC, on September 13, 2002.

**R. Ryan Posten,**

*Exemptions Program Officer, Office of Hazardous Materials, Exemptions and Approvals.*

| Application | Docket No. | Applicant | Modification of exemption |
|---|---|---|---|
| 10798–M | | Arch Chemicals, Inc., Norwalk, CT (*See* Footnote 1) | 10798 |
| 10850–M | | Ashland, Inc., Columbus, OH (*See* Footnote 2) | 10850 |
| 10867–M | | Pacific Scientific, Duarte, CA (*See* Footnote 3) | 10867 |
| 10880–M | | American West Explosives, Inc., Springfield, MO (*See* Footnote 4) | 10880 |
| 11494–M | | Atlantic Research Corp (Automotive Products Group), Knoxville, TN (*See* Footnote 5). | 11494 |
| 12122–M | RSPA–98–4313 | Atlantic Research Corp (Automotive Products Group), Knoxville, TN (*See* Footnote 6). | 12122 |
| 12178–M | RSPA–99–5050 | OraSure Technologies, Inc., Bethlehem, PA (*See* Footnote 7) | 12178 |
| 12997–M | RSPA–02–12214 | Albemarle Corporation, Baton Rouge, LA (*See* Footnote 8) | 12997 |
| 103015–M | RSPA–02–12926 | BOC Gases, Murray Hill, NJ (*See* Footnote 9) | 13015 |

[1] To modify the exemption to authorize the transportation of Division 5.1 and additional Class 8 and Division 6.1 materials in DOT Specification tank cars.

[2] To modify the exemption to authorize the transportation of additional Class 3 materials in DOT Specification 4BW cylinders.

[3] To modify the exemption to authorize a change to the mechanical properties of the material by allowing for stress relief and hydrotest frequency for 3 to 5 years for the transportation of Division 2.2 materials in non-DOT specification cylinders.

[4] To modify the exemption to authorize transportation of Division 1.1D, 1.4D, 1.4B, 1.4S and additional 1.5D materials in reuseable flexible intermediate bulk containers.

[5] To modify the exemption to authorize the elimination of the flattening test requirement on non-DOT specification cylinders transporting Division 2.2 materials.

[6] To modify the exemption to authorize the elimination of the flattening test requirement on non-DOT specification cylinders transporting Division 2.2 materials.

[7] To modify the exemption to authorize expanding the distribution/sale region for export of the DOT Specification 2Q container containing certain Division 2.1 materials.

[8] To modify the exemption to authorize the additional of a Class 8 Packing Group II material transported in vented intermediate bulk containers.

[9] To modify the exemption to authorize label collars configured with cut-out windows and implementation of quality assurance procedures on cylinders containing Division 2.1 and 2.2 materials.

[FR Doc. 02–23838 Filed 9–18–02; 8:45 am]
BILLING CODE 4910–60–M

## DEPARTMENT OF TRANSPORTATION

### Research and Special Programs Administration

### Office of Hazardous Materials Safety; Notice of Applications for Exemptions

**AGENCY:** Research and Special Programs Administration, DOT.

**ACTION:** List of applicants for exemptions.

**SUMMARY:** In accordance with the procedures governing the application for, and the processing of, exemptions from the Department of Transportation's Hazardous Materials Regulations (49 CFR part 107, subpart B), notice is hereby given that the Office of Hazardous Materials Safety has received the applications desribed herein. Each mode of transportation for which a particular exemption is requested is indicated by a number in the ''Nature of Application'' portion of the table below as follows: 1—Motor vehicle, 2—Rail freight, 3—Cargo vessel, 4—Cargo aircraft only, 5—Passenger-carrying aircraft.

**DATES:** Comments must be received on or before October 21, 2002.

**ADDRESSES:** Records Center, Research and Special Programs, Administration, U.S. Department of Transportation, Washington, DC 20590.

Comments should refer to the application number and be submitted in triplicate. If confirmation of receipt of comments is desired, include a self-addressed stamped postcard showing the exemption application number.

**FOR FURTHER INFORMATION CONTACT:** Copies of the applications (*See* Docket Number) are available for inspection at the New Docket Management Facility, Pub. L. 401, at the U.S. Department of Transportation, Nassif Building, 400 7th Street, SW., Washington, DC 20590 or at *http://dms.dot.gov.*

This notice of receipt of applications for new exemptions is published in accordance with Part 107 of the Federal hazardous materials transportation law (49 U.S.C. 5117(b); 49 CFR 1.53(b)).

Issued in Washington, DC, on September 13, 2002.

**R. Ryan Posten,**

*Exemptions Program Officer, Office of Hazardous Materials Exemptions and Approvals.*

| Application No. | Docket No. | Applicant | Regulation(s) affected | Nature of exemption thereof |
|---|---|---|---|---|
| 13104–N ..... | RSPA–02–13279 | Consumers Energy Corporation, Charlevoix, MI. | 49 CFR 173.403, 173.427. | To authorize the transportation in commerce of a large component of an unpackaged surface contaminated object (SCO) used for transporting Class 7 radioactive materials. (Modes 1, 2) |
| 13105–N ..... | RSPA–02–13278 | T.L.C.C.I, Inc., Nashville, TN. | 49 CFR 173.22a, 173.304. | To authorize the manufacture, mark, sale, and use of non-DOT specification cylinders for use in transporting Division 2.1 materials. (modes 1, 2, 3, 4) |
| 13106–N ..... | RSPA–02–13280 | Air Products & Chemicals, Inc., Allentown, PA. | 49 CFR 173.301(d)(a)&(2). | To authorize the transportation in commerce of hydrogen and nitrogen gas mixtures in manifolded DOT–Specification cylinders. (modes 1, 3) |
| 13107–N ..... | RSPA–02–13276 | Sensors, Inc., Saline, MI | 49 CFR 172 Subparts C&G. | To authorize the transportation in commerce of specially devices containing a DOT Specification 3AL1800 cylinder containing flammable compressed gas utilizing a small hydrogen/helium flame without required shipping papers. (mode 1) |
| 13109–N ..... | RSPA–02–13281 | Canberra Industries, Inc., Meriden, CN. | 49 CFR 173.302, 175.3 | To authorize the manufacture, marking, sale and use of non-DOT specification containers described as hermetically-sealed electron tube devices for use in transporting Division 2.2 hazardous mateials. (modes 1, 4, 5) |
| 13110–N ..... | RSPA–02–13282 | Praxair, Inc., Danbury, CT. | 49 CFR 173.242 ..... | To authorize the transportation in commerce of non-DOT specification bulk packaging for use in transporting metal, catalyst, dry, Division 4.2. (modes 1, 3) |
| 13111–N ..... | RSPA–02–13284 | Fisher Scientific Chemical Division, Fair Lawn, NJ. | 49 CFR 173.158(f)7(h) ... | To authorize the transportation in commerce of 70% nitric acid, Class 8, in certain single and combination packagings which is currently forbidden. (modes 1, 2, 3, 4) |
| 13112–N ..... | RSPA–02–13286 | Conax Florida Corporation St. Petersburg, FL. | 49 CFR 173.302, 175.3 | To authorize the manufacture, mark, sale and use of non-DOT specification non-reusable cylinders conforming with all requlations simiolar to DOT specification 39 cylinder for use in transporting Division 2.2 material. (modes 1, 2, 3, 4, 5) |
| 13114–N ..... | RSPA–02–13303 | Eagle Window & Door, Inc. Dubuque, IA. | 49 CFR 172.202–204 ..... | To authorize the transportation in commerce of non-bulk containers of paint to be transported within the facility without required shipping papers. (mode 1) |
| 13116–N ..... | RSPA–02–13306 | Chromatography Research Supplies, Inc., Louisville, KY. | 49 CFR 173.151(b) ..... | To authorize the transportation in commerce of gas filters containing limited quantities of hazardous materials classed as self-heating solid, inorganic, n.o.s. to be transported under the limited quantity provisions as Division 4.1 without required labelling or placarding. (modes 1, 4, 5) |
| 13117–N ..... | RSPA–02–13307 | TEN–Packaging Services, Newport, MN. | 49 CFR 173.21(i) ..... | To authorize the examination of cigarette lighters and their inner packagings. (mode 1) |

| Application No. | Docket No. | Applicant | Regulation(s) affected | Nature of exemption thereof |
|---|---|---|---|---|
| 13118–N ..... | RSPA–02–13305 | Greif Bros. Corporation, Delaware, OH. | 49 CFR 178.503(a)(10) .. | To authorize the one-time transportation in commerce of UN1A2 drums with alternative markings for use in transporting Division 4.2 hazardous materials. (mode 1) |

Correction Notice: The new exemption notice published in the Federal Register/Vol. 67, No. 166, Tuesday, August 27, 2002; page 55061 should have appeared as Docket No. 13088–N; RSPA–2003–13402 applicant Electron Transfer Technologies instead of Air Products.

[FR Doc. 02–23839 Filed 9–18–02; 8:45 am]

**BILLING CODE 4910–60–M**

## DEPARTMENT OF TRANSPORTATION

### Surface Transportation Board

**[STB Finance Docket No. 34110]**

### Montreal, Maine & Atlantic Railway LLC—Acquisition and Operation Exemption—Bangor & Aroostook Railroad Company, Canadian American Railroad Company, The Northern Vermont Railroad Company Incorporated, Newport & Richford Railroad Company and Van Buren Bridge Company

Montreal, Maine & Atlantic Railway LLC (MMA), a noncarrier, has filed a notice of exemption under 49 CFR 1150.31 to acquire and operate, certain rail lines and other assets of Bangor & Aroostook Railroad Company (BAR), Canadian American Railroad Company (CDAC), The Northern Vermont Railroad Company Incorporated (NVT), Newport & Richford Railroad Company (N&R), and Van Buren Bridge Company (VBB), (collectively, the BAR system assets), totaling approximately 518.48 miles of rail lines located in Maine and Vermont.[1]

MMA will acquire and operate the following rail lines:

BAR's (a) Searsport, Millinocket, and Madawaska Subdivisions between milepost 0.0 at Searsport, ME, and milepost 264.1 at Madawaska, ME; (b) Van Buren Subdivision between milepost 0.0 at Madawaska, and milepost 24.74 at Van Buren, ME; (c) Presque Isle Subdivision between milepost 0.0 at Squa Pan, ME, and milepost 25.30 at Presque Isle, ME; (d) Limestone Subdivision between milepost 0.0 at Presque Isle, and milepost 30.36 at Limestone, ME; (e) Fort Fairfield Subdivision between milepost 0.0 at Presque Isle, and milepost 18.64 at Fort Fairfield, ME; (f) Houlton Subdivision between milepost 0.0 at Oakfield, ME, and milepost 18.40 at Houlton, ME; (g) East Millinocket Subdivision between milepost 0.0 at Millinocket, ME, and milepost 7.55 at E. Millinocket, ME; and (h) K.I. Subdivision between milepost 0.0 at Brownville, ME, and milepost 4.0 at Brownville Jct. ME;

CDAC's Moosehead Subdivision between milepost 0.0 at Brownville Jct., and milepost 101.90 at the United States-Canadian border crossing;

NVT and N&R's rail lines: (a) Between the United States-Canadian border crossing at milepost 26.25 and milepost 32.63 of the Newport Subdivision near Richford, VT; (b) between milepost 43.32 at the United States-Canadian border crossing and milepost 58.4 at the end of the Newport Subdivision, in Newport, VT; and (c) between milepost 0.0 at Newport, and milepost 2.0 of the Lyndonville Subdivision, near Newport; and

VBB's rail line between the connection with BAR and the International Boundary Line in the center of the Van Buren Bridge at the United States-Canadian border.[2]

MMA indicates that it intends to consummate the transaction as soon as possible following the Court's approval of its agreement with the Trustee.[3] The earliest the transaction could have been consummated was September 3, 2002, the effective date of the exemption (7 days after the exemption was filed).

Because the projected revenues of the rail lines to be operated will exceed $5 million, MMA certified to the Board on June 12, 2002, that the required notice of its rail line acquisition and operation was posted at the workplace of the employees of affected lines and was served on the national offices of all labor unions with employees on the affected lines. *See* 49 CFR 1150.35(a), referring to 49 CFR 1150.32(e).[4]

If the notice contains false or misleading information, the exemption is void *ab initio.* Petitions to revoke the exemption under 49 U.S.C. 10502(d) may be filed at any time. The filing of a petition to revoke does not automatically stay the transaction.

An original and 10 copies of all pleadings, referring to STB Finance Docket No. 34110, must be filed with the Surface Transportation Board, 1925 K Street NW., Washington, DC 20423–0001. In addition, one copy of each pleading must be served on Michael L. Rosenthal, Covington & Burling, 1201 Pennsylvania Avenue, NW., Washington, DC 20006–2401.[5]

Board decisions and notices are available on our Web site at *WWW.STB.DOT.GOV.*

Decided: September 11, 2002.

By the Board, David M. Konschnik, Director, Office of Proceedings.

**Vernon A. Williams,**

*Secretary.*

[FR Doc. 02–23697 Filed 9–18–02; 8:45 am]

**BILLING CODE 4915–00–P**

[1] On August 15, 2001, an involuntary petition for bankruptcy under Chapter 11 of the Bankruptcy Act was filed against BAR before the United States Bankruptcy Court for the District of Maine (Court). Subsequently, CDAC, NVT, N&R and VBB filed voluntary petitions for bankruptcy under Chapter 11 before the Court.

[2] MMA states that it also intends to acquire lines and assets of CDAC, VBB and the Canadian Trustee for the Quebec Southern Railway Company, Ltd. that are part of the BAR system but are located in Canada and are not subject to Board jurisdiction.

[3] MMT indicates that it expected to submit the agreement to the Court for approval on or about August 31, 2002.

[4] MMT had originally served and posted notice of its intent on November 5, 2001. However, in light of the subsequent bankruptcy of the carriers to be acquired, MMT served and posted a revised notice of intent.

[5] The State of Vermont's Agency of Transportation has entered an appearance, and E.I. Dupont De Nemours and Company (Dupont) has filed a petition for leave to intervene, expressing concerns about MMA's financial viability. Dupont's petition to intervene will be granted.

## DEPARTMENT OF THE TREASURY

### Submission for OMB Review; Comment Request

September 12, 2002.

The Department of the Treasury has submitted the following public information collection requirement(s) to OMB for review and clearance under the Paperwork Reduction Act of 1995, Public Law 104–13. Copies of the submission(s) may be obtained by calling the Treasury Bureau Clearance Officer listed. Comments regarding this information collection should be addressed to the OMB reviewer listed

and to the Treasury Department Clearance Officer, Department of the Treasury, Room 2110, 1425 New York Avenue, NW., Washington, DC 20220.

*Dates:* Written comments should be received on or before October 21, 2002 to be assured of consideration.

**Internal Revenue Service (IRS)**

*OMB Number:* 1545–1027.
*Form Number:* IRS Form 1120–PC.
*Type of Review:* Revision.
*Title:* U.S. Property and Casualty Insurance Company Income Tax Return.
*Description:* Property and casualty insurance companies are required to file an annual return of income and pay the tax due. The data is used to insure that companies have correctly reported income and paid the correct tax.
*Respondents:* Business or other for-profit.
*Estimated Number of Respondents/Recordkeepers:* 2,200.
*Estimated Burden Hours Per Respondent/Recordkeeper:*
Recordkeeping—93 hr., 59 min.
Learning about the law or the form—34 hr., 25 min.
Preparing the form—57 hr., 57 min.
Copying, assembling, and sending the form to the IRS—5 hr., 54 min.
*Frequency of Response:* Annually.
*Estimated Total Reporting/Recordkeeping Burden:* 422,950 hours.

*OMB Number:* 1545–1028.
*Regulation Project Number:* INTL–941–86 NPRM and INTL–655–87 Temporary.
*Type of Review:* Extension.
*Title:* Passive Foreign Investment Companies.
*Description:* These regulations specify how U.S. persons who are shareholders of passive foreign investment companies (PFICs) make elections with respect to their PFIC stock.
*Respondents:* Business or other for-profit.
*Estimated Number of Respondents:* 275,000.
*Estimated Burden Hours Per Respondent:* 25 minutes.
*Frequency of Response:* Annually, Other (one-time only).
*Estimated Total Reporting Burden:* 112,500 hours.

*OMB Number:* 1545–1424.
*Form Number:* IRS Form 1099–C.
*Type of Review:* Extension.
*Title:* Cancellation of Debt.
*Description:* Form 1099–C is used for reporting canceled debt, as required by section 6050P of the Internal Revenue Code. It is used to verify that debtors are correctly reporting their income.
*Respondents:* Business or other for-profit, Not-for-profit institutions, Federal Government.
*Estimated Number of Respondents:* 647,993.
*Estimated Burden Hours Per Respondent:* 10 minutes.
*Frequency of Response:* Monthly, Annually.
*Estimated Total Reporting Burden:* 110,159 hours.

*OMB Number:* 1545–1661.
*Regulation Project Number:* REG–106010–98 Final.
*Type of Review:* Extension.
*Title:* Qualified Lessee Construction Allowances for Short-term Leases.
*Description:* The regulations provide guidance with respect to § 110, which provides a safe harbor whereby it will be assumed that a construction allowance provided by a lessor to a lessee is used to construct or improve lessor property when long-term property is constructed or improved and used pursuant to a short-term lease. The regulations also provide a reporting requirement that ensures that both the lessee and lessor consistently treat the property subject to the construction allowance as a nonresidential real property owned by the lessor.
*Respondents:* Business or other for-profit.
*Estimated Number of Respondents:* 10,000.
*Estimated Burden Hours Per Respondent:* 1 hour.
*Frequency of Response:* Annually.
*Estimated Total Reporting Burden:* 10,000 hours.

*OMB Number:* 1545–1793.
*Revenue Procedure Number:* Revenue Procedure 2002–43.
*Type of Review:* Extension.
*Title:* Determination of Substitute Agent for a Consolidated Group.
*Description:* The information is needed in order for (i) a terminating common parent of a consolidated group to notify the IRS that it will terminate and to designate another corporation to be the group's substitute agent, pursuant to Treasury Regulation § 1.1502–77(d)(1) or § 1.1502–77A(d); (ii) the remaining members of a consolidated group to designate a substitute agent pursuant to § 1.1502–77A(d); (iii) the default substitute agent to notify the IRS that it is the default substitute agent pursuant to § 1.1502–77(d)(2); or (iv) requests by a member of the group for the IRS to designate a substitute agent or replace a previously designated substitute agent. The IRS will use the information to determine whether to approve the designation (if approval is required), to designate a substitute agent, or to replace a substitute agent, and to change the IRS's records to reflect the name and other information about the substitute agent.
*Respondents:* Business or other for-profit.
*Estimated Number of Respondents:* 200.
*Estimated Burden Hours Per Respondent:* 2 hours.
*Frequency of Response:* On occasion.
*Estimated Total Reporting Burden:* 400 hours.
*Clearance Officer:* Glenn Kirkland, (202) 622–3428, Internal Revenue Service, Room 6411–03, 1111 Constitution Avenue, NW., Washington, DC 20224.
*OMB Reviewer:* Joseph F. Lackey, Jr., (202) 395–7316, Office of Management and Budget, Room 10235, New Executive Office Building, Washington, DC 20503.

**Lois K. Holland,**
*Departmental Reports Management Officer.*
[FR Doc. 02–23781 Filed 9–18–02; 8:45 am]
BILLING CODE 4830–01–P

---

## DEPARTMENT OF THE TREASURY

## Submission for OMB Review; Comment Request

September 12, 2002.

The Department of Treasury has submitted the following public information collection requirement(s) to OMB for review and clearance under the Paperwork Reduction Act of 1995, Public Law 104–13. Copies of the submission(s) may be obtained by calling the Treasury Bureau Clearance Officer listed. Comments regarding this information collection should be addressed to the OMB reviewer listed and to the Treasury Department Clearance Officer, Department of the Treasury, Room 2110, 1425 New York Avenue, NW., Washington, DC 20220.

**DATES:** Written comments should be received on or before October 21, 2002 to be assured of consideration.

**Internal Revenue Service**

*OMB Number:* 1545–1150.
*Form Number:* IRS Form 990–EZ.
*Type of Review:* Extension.
*Title:* Short Form Return of Organization Exempt from Income Tax.
*Description:* Form 990–EZ is needed to determine that the Internal Revenue Code section 501(a) tax-exempt organizations fulfill the operating conditions within the limitations of their tax exemption. IRS uses the information from this form to determine if the filers are operating within the rules of their exemption.
*Respondents:* Not-for-profit institutions.
*Estimated Number of Respondents/Recordkeepers:* 124,184.

*Estimated Burden Hours Per Respondent/Recordkeeper:*

| Form/schedule | Recordkeeeping | Learning about the law or the form | Preparing the form | Copying, assembling, and sending the form to the IRS |
|---|---|---|---|---|
| 990 | 98 hr., 17 min | 15 hr., 10 min | 21 hr., 10 min | 1 hr., 4 min. |
| 990–EZ | 28 hr., 56 min | 11 hr., 39 min | 14 hr., 30 min | 32 min. |
| Schedule A (990 or 990–EZ). | 50 hr., 13 min. | 9 hr., 26 min | 10 hr., 40 min | 0 |
| Schedule B (990, 990–EZ or 990–PF). | 4 hr., 46 min. | 1 hr., 23 min. | 1 hr., 31 min. | 0 |

*Frequency of Response:* Annually.

*Estimated Total Reporting/Recordkeeping Burden:* 6,909,598 hours.

*Clearance Officer:* Glenn Kirkland, (202) 622–3428, Internal Revenue Service, Room 6411–03, 1111 Constitution Avenue, NW., Washington, DC 20224.

*OMB Reviewer:* Joseph F. Lackey, (202) 395–7316, Office of Management and Budget, Room 10235, New Executive Office Building, Washington, DC 20503.

**Mary A. Able,**

*Departmental Reports Management Officer.*

[FR Doc. 02–23782 Filed 9–18–02; 8:45 am]

**BILLING CODE 4830–01–P**

## DEPARTMENT OF THE TREASURY

### Bureau of Alcohol, Tobacco and Firearms

### Proposed Collection; Comment Request

**ACTION:** Notice and request for comments.

**SUMMARY:** The Department of the Treasury, as part of its continuing effort to reduce paperwork and respondent burden, invites the general public and other Federal agencies to take this opportunity to comment on proposed and/or continuing information collections, as required by the Paperwork Reduction Act of 1995, Public Law 104–13 (44 U.S.C. 3506(c)(2)(A)). Currently, the Bureau of Alcohol, Tobacco and Firearms within the Department of the Treasury is soliciting comments concerning the Excise Tax Return—Alcohol and Tobacco.

**DATES:** Written comments should be received on or before November 18, 2002 to be assured of consideration.

**ADDRESSES:** Direct all written comments to Bureau of Alcohol, Tobacco and Firearms, Linda Barnes, 650 Massachusetts Avenue, NW., Washington, DC 20226, (202) 927–8930.

**FOR FURTHER INFORMATION CONTACT:** Requests for additional information or copies of the form(s) and instructions should be directed to Wanda Burggraff, Revenue Operations Branch, 650 Massachusetts Avenue, NW., Washington, DC 20226, (202) 927–8198.

**SUPPLEMENTARY INFORMATION:**

*Title:* Excise Tax Return—Alcohol and Tobacco.

*OMB Number:* 1512–0467.

*Form Number:* ATF F 5000.24.

*Abstract:* ATF is responsible for the collection of the excise taxes on distilled spirits, wine, beer, cigars cigarettes, chewing tobacco, snuff, and cigarette papers and tubes imposed by Chapters 51 and 52 of Title 26 of the United States Code. The information requested on the form is necessary to establish the taxpayers's identity, the amount and type of taxes due, and the amount of payments made.

*Current Actions:* ATF F 5000.24 has been revised in the plain language format. The form is more user-friendly and is organized in a logical manner that is clearly written in a visually appealing style. The instructions have been changed from a numeric system to an alphabetical system. Several instructions have been consolidated into a chart format for easier reference.

*Type of Review:* Revision.

*Affected Public:* Business or other for-profit.

*Estimated Number of Respondents:* 2,800.

*Estimated Total Annual Burden Hours:* 35,280.

*Request for Comments:* Comments submitted in response to this notice will be summarized and/or included in the request for OMB approval. All comments will become a matter of public record. Comments are invited on: (a) Whether the collection of information is necessary for the proper performance of the functions of the agency, including whether the information shall have practical utility; (b) the accuracy of the agency's estimate of the burden of the collection of information; (c) ways to enhance the quality, utility, and clarity of the information to be collected; (d) ways to minimize the burden of the collection of information on respondents, including through the use of automated collection techniques or other forms of information technology; and (e) estimates of capital or start-up costs and costs of operation, maintenance, and purchase of services to provide information.

Dated: September 11, 2002.

**William T. Earle,**

*Assistant Director (Management) CFO.*

[FR Doc. 02–23750 Filed 9–18–02; 8:45 am]

**BILLING CODE 4810–31–P**

## DEPARTMENT OF THE TREASURY

### Bureau of Alcohol, Tobacco and Firearms

### Proposed Collection; Comment Request

**ACTION:** Notice and request for comments.

**SUMMARY:** The Department of the Treasury, as part of its continuing effort to reduce paperwork and respondent burden, invites the general public and other Federal agencies to take this opportunity to comment on proposed and/or continuing information collections, as required by the Paperwork Reduction Act of 1995, Public Law 104–13 (44 U.S.C. 3506(c)(2)(A)). Currently, the Bureau of Alcohol, Tobacco and Firearms within the Department of the Treasury is soliciting comments concerning the Excise Tax Return—Alcohol and Tobacco (Puerto Rico).

**DATES:** Written comments should be received on or before November 18, 2002 to be assured of consideration.

**ADDRESSES:** Direct all written comments to Bureau of Alcohol, Tobacco and Firearms, Linda Barnes, 650 Massachusetts Avenue, NW., Washington, DC 20226, (202) 927–8930.

**FOR FURTHER INFORMATION CONTACT:** Requests for additional information or

copies of the form(s) and instructions should be directed to Wanda Burggraff, Revenue Operations Branch, 650 Massachusetts Avenue, NW., Washington, DC 20226, (202) 927–8198.

**SUPPLEMENTARY INFORMATION:**

*Title:* Excise Tax Return—Alcohol and Tobacco (Puerto Rico).

*OMB Number:* 1512–0497.

*Form Number:* ATF F 5000.25.

*Abstract:* Businesses in Puerto Rico report their Federal excise tax liability on distilled spirits, wine, beer, tobacco products, cigarette papers and tubes on ATF F 5000.25. ATF uses this form to identify the taxpayer and to determine the amount and type of taxes due and paid.

*Current Actions:* ATF F 5000.25 has been revised in the plain language format. The form is more user-friendly and is organized in a logical manner that is clearly written in a visually appealing style. The instructions have been changed from a numeric system to an alphabetical system. Several instructions have been consolidated into a chart format for easier reference.

*Type of Review:* Revision.

*Affected Public:* Business or other for-profit.

*Estimated Number of Respondents:* 30.

*Estimated Total Annual Burden Hours:* 130.

*Request for Comments:* Comments submitted in response to this notice will be summarized and/or included in the request for OMB approval. All comments will become a matter of public record. Comments are invited on: (a) Whether the collection of information is necessary for the proper performance of the functions of the agency, including whether the information shall have practical utility; (b) the accuracy of the agency's estimate of the burden of the collection of information; (c) ways to enhance the quality, utility, and clarity of the information to be collected; (d) ways to minimize the burden of the collection of information on respondents, including through the use of automated collection techniques or other forms of information technology; and (e) estimates of capital or start-up costs and costs of operation, maintenance, and purchase of services to provide information.

Dated: September 11, 2002.

**William T. Earle,**

*Assistant Director (Management) CFO.*

[FR Doc. 02–23751 Filed 9–18–02; 8:45 am]

**BILLING CODE 4810–31–P**

## DEPARTMENT OF THE TREASURY

### Bureau of Alcohol, Tobacco and Firearms

### Proposed Collection; Comment Request

**ACTION:** Notice and request for comments.

**SUMMARY:** The Department of the Treasury, as part of its continuing effort to reduce paperwork and respondent burden, invites the general public and other Federal agencies to take this opportunity to comment on proposed and/or continuing information collections, as required by the Paperwork Reduction Act of 1995, Public Law 104–13 (44 U.S.C. 3506(c)(2)(A)). Currently, the Bureau of Alcohol, Tobacco and Firearms within the Department of the Treasury is soliciting comments concerning the Certification of Secure Gun Storage or Safety Devices.

**DATES:** Written comments should be received on or before November 18, 2002 to be assured of consideration.

**ADDRESSES:** Direct all written comments to Bureau of Alcohol, Tobacco and Firearms, Linda Barnes, 650 Massachusetts Avenue, NW., Washington, DC 20226, (202) 927–8930.

**FOR FURTHER INFORMATION CONTACT:** Requests for additional information or copies of the form(s) and instructions should be directed to Charles Bartlett, National Licensing Center, Atlanta, Georgia 30301, (404) 679–5040.

**SUPPLEMENTARY INFORMATION:**

*Title:* Certification of Secure Gun Storage or Safety Devices.

*OMB Number:* 1512–0551.

*Form Number:* ATF F 5300.42.

*Abstract:* The requested information on ATF 5300.42 will be used to ensure that applicants for a Federal firearms license are in compliance with the requirements pertaining to the availability of secure gun storage or safety devices.

*Current Actions:* There are no changes to this information collection and it is being submitted for extension purposes only.

*Type of Review:* Extension.

*Affected Public:* Business or other for-profit.

*Estimated Number of Respondents:* 31,000.

*Estimated Total Annual Burden Hours:* 600.

*Request for Comments:* Comments submitted in response to this notice will be summarized and/or included in the request for OMB approval. All comments will become a matter of public record. Comments are invited on: (a) Whether the collection of information is necessary for the proper performance of the functions of the agency, including whether the information shall have practical utility; (b) the accuracy of the agency's estimate of the burden of the collection of information; (c) ways to enhance the quality, utility, and clarity of the information to be collected; (d) ways to minimize the burden of the collection of information on respondents, including through the use of automated collection techniques or other forms of information technology; and (e) estimates of capital or start-up costs and costs of operation, maintenance, and purchase of services to provide information.

Dated: September 11, 2002.

**William T. Earle,**

*Assistant Director (Management) CFO.*

[FR Doc. 02–23752 Filed 9–18–02; 8:45 am]

**BILLING CODE 4810–31–P**

## DEPARTMENT OF THE TREASURY

### Bureau of Alcohol, Tobacco and Firearms

### Proposed Collection; Comment Request

**ACTION:** Notice and request for comments.

**SUMMARY:** The Department of the Treasury, as part of its continuing effort to reduce paperwork and respondent burden, invites the general public and other Federal agencies to take this opportunity to comment on proposed and/or continuing information collections, as required by the Paperwork Reduction Act of 1995, Public Law 104–13 (44 U.S.C. 3506(c)(2)(A)). Currently, the Bureau of Alcohol, Tobacco and Firearms within the Department of the Treasury is soliciting comments concerning the Open Letter to Federal Firearms Licensees.

**DATES:** Written comments should be received on or before November 18, 2002 to be assured of consideration.

**ADDRESSES:** Direct all written comments to Bureau of Alcohol, Tobacco and Firearms, Linda Barnes, 650 Massachusetts Avenue, NW., Washington, DC 20226, (202) 927–8930.

**FOR FURTHER INFORMATION CONTACT:** Requests for additional information or copies of the form(s) and instructions should be directed to Vivian Pena, Firearms Programs Division, 650 Massachusetts Avenue, NW., Washington, DC 20226, (202) 927–7770.

**SUPPLEMENTARY INFORMATION:**

*Title:* Open Letter to Federal Firearms Licensees.

*OMB Number:* 1512–0552.

*Abstract:* The FBI has informed ATF that thousands of licensees have failed to enroll with them to conduct a national instant criminal background check system (NICS). The Open Letter to Federal Firearms Licensees informs the non-enrolled licensees that they cannot transfer a firearm to a nonlicensed individual without first contacting the FBI and conducting a NICS check.

*Current Actions:* There are no changes to this information collection and it is being submitted for extension purposes only.

*Type of Review:* Extension.

*Affected Public:* Business or other for-profit.

*Estimated Number of Respondents:* 18,000.

*Estimated Total Annual Burden Hours:* 306.

*Request for Comments:* Comments submitted in response to this notice will be summarized and/or included in the request for OMB approval. All comments will become a matter of public record. Comments are invited on: (a) Whether the collection of information is necessary for the proper performance of the functions of the agency, including whether the information shall have practical utility; (b) the accuracy of the agency's estimate of the burden of the collection of information; (c) ways to enhance the quality, utility, and clarity of the information to be collected; (d) ways to minimize the burden of the collection of information on respondents, including through the use of automated collection techniques or other forms of information technology; and (e) estimates of capital or start-up costs and costs of operation, maintenance, and purchase of services to provide information.

Dated: September 11, 2002.

**William T. Earle,**

*Assistant Director (Management) CFO.*

[FR Doc. 02–23753 Filed 9–18–02; 8:45 am]

**BILLING CODE 4810–31–P**

## DEPARTMENT OF VETERANS AFFAIRS

### Advisory Committee on Former Prisoners of War, Notice of Meeting

The Department of Veterans Affairs (VA) gives notice under Public Law 92–463 (Federal Advisory Committee Act) that a meeting of the Advisory Committee on Former Prisoners of War (POW) will be held on October 7–9, 2002, at the Veterans Affairs Medical Center, 4150 Clement Street, San Francisco, CA 94121. Each day the meeting will convene at 9 a.m. and end at 4:30 p.m. The meeting is open to the public.

The purpose of the Committee is to advise the Secretary of Veterans Affairs on the administration of benefits under Title 38, United States Code, for veterans who are former prisoners of war, and to make recommendations on the needs of such veterans for compensation, health care and rehabilitation.

The agenda for October 7 will begin with an introduction of Committee members and dignitaries, a review of Committee reports, an update of activities since the last meeting, and a period for POW veterans and/or the public to address the Committee. The Committee will also discuss future plans for the VA POW Learning Seminars, and conclude with a report from the Expert Medical Panel on Presumptive Conditions. The agenda on October 8 will include a report on VA's Compensation and Pension Service programs in progress, and a report on the activities of the Veterans Health Administration. VA will also present to the Committee a proposal to establish POW Regional Compensation Examination Units in ten to twelve Regional Offices, modeled after the Seattle and Jackson paradigms. The committee will also take up consideration of priority for POWs in Long-Term Health Care programs, and hear a report from the National Institute of Health Agency Follow-up on Morbidity and Mortality in Heart Disease and Stroke among former POWs. The session will conclude with a report from the Robert E. Mitchell Center for Prisoner of War Studies, followed by a general discussion. On October 9, the Committee's Medical and Administrative subcommittees will break out to discuss their activities and report back to the Committee. Additionally, the Committee will review and analyze the comments discussed throughout the meeting for the purpose of assisting and compiling a final report to be sent to the Secretary.

Members of the public may direct questions or submit prepared statements for review by the Committee in advance of the meeting, in writing only, to Mr. Ronald J. Henke, Director, Compensation and Pension Service (21), Department of Veterans Affairs, 810 Vermont Avenue, NW., Washington, DC 20420. A report of the meeting and roster of Committee members may be obtained from Mr. Henke.

Dated: September 12, 2002.

By Direction of the Secretary.

**Ronald R. Aument,**

*Deputy Chief of Staff.*

[FR Doc. 02–23786 Filed 9–18–02; 8:45 am]

**BILLING CODE 8320–01–M**

## DEPARTMENT OF VETERANS AFFAIRS

### Geriatrics and Gerontology Advisory Committee; Notice of Meeting

The Department of Veterans Affairs (VA) gives notice under Public Law 92–463 (Federal Advisory Committee Act) that a meeting of the Geriatrics and Gerontology Advisory Committee (GGAC) will be held on Tuesday, September 24, 2002, at the Department of Veterans Affairs Central Office, 810 Vermont Avenue, NW., Room 528, Washington, DC. The meeting will convene at 8:30 a.m. and conclude at 5 p.m. The meeting is open to the public.

The purpose of the Committee is to provide advice on VA issues related to geriatrics and gerontology thereby enhancing services and programs available to aging veterans.

The topics to be presented/discussed include:

- Site visit to Geriatric Research, Education, and Clinical Centers (GRECCS)
- Update on current issues of the Millennium Act
- Geriatrics and Extended Care Initiatives
- Status of Geriatric Fellowship Program
- Update on Aging Research in VA

Individuals who wish to attend the meeting should contact Ms. Jacqueline Holmes, Staff Assistant, Geriatrics and Extended Care Strategic Healthcare Group, at (202) 273–8539.

Dated: September 12, 2002.

By Direction of the Secretary.

**Ronald R. Aument,**

*Deputy Chief of Staff.*

[FR Doc. 02–23785 Filed 9–18–02; 8:45 am]

**BILLING CODE 8320–01–M**

Federal Register

Thursday,
September 19, 2002

# Part II

# Department of Transportation

## National Highway Traffic Safety Administration

## 49 CFR Part 593

## List of Nonconforming Vehicles Decided To Be Eligible for Importation; Final Rule; Final Decision That Certain Nonconforming Vehicles Are Eligible for Importation; Notice

**DEPARTMENT OF TRANSPORTATION**

**National Highway Traffic Safety Administration**

**49 CFR Part 593**

**[Docket No. NHTSA–2002–13349]**

**RIN 2127–AI79**

## List of Nonconforming Vehicles Decided To Be Eligible for Importation

**AGENCY:** National Highway Traffic Safety Administration (NHTSA), DOT.

**ACTION:** Final rule.

**SUMMARY:** This document revises the list of vehicles not originally manufactured to conform to the Federal motor vehicle safety standards that NHTSA has decided to be eligible for importation. This list is contained in an appendix to the agency's regulations that prescribe procedures for import eligibility decisions. The revised list includes all vehicles that NHTSA has decided to be eligible for importation since October 1, 2001. NHTSA is required by statute to publish this list annually in the **Federal Register.**

**EFFECTIVE DATE:** September 19, 2002.

**FOR FURTHER INFORMATION CONTACT:** Luke Loy, Office of Vehicle Safety Compliance, NHTSA (202–366–5308).

**SUPPLEMENTARY INFORMATION:** Under 49 U.S.C. 30141(a)(1)(A), a motor vehicle that was not originally manufactured to conform to all applicable Federal motor vehicle safety standards shall be refused admission into the United States unless NHTSA has decided that the motor vehicle is substantially similar to a motor vehicle originally manufactured for importation into and sale in the United States, certified under 49 U.S.C. 30115, and of the same model year as the model of the motor vehicle to be compared, and is capable of being readily altered to conform to all applicable Federal motor vehicle safety standards. Where there is no substantially similar U.S.-certified motor vehicle, 49 U.S.C. 30141(a)(1)(B) permits a nonconforming motor vehicle to be admitted into the United States if its safety features comply with, or are capable of being altered to comply with, all applicable Federal motor vehicle safety standards based on destructive test data or such other evidence as the Secretary of Transportation decides to be adequate.

Under 49 U.S.C. 30141(a)(1), import eligibility decisions may be made ''on the initiative of the Secretary of Transportation or on petition of a manufacturer or importer registered under [49 U.S.C. 30141(c)].'' The Secretary's authority to make these decisions has been delegated to NHTSA. The agency publishes notice of eligibility decisions as they are made.

Under 49 U.S.C. 30141(b)(2), a list of all vehicles for which import eligibility decisions have been made must be published annually in the **Federal Register**. On October 1, 1996, NHTSA added the list as an appendix to 49 CFR part 593, the regulations that establish procedures for import eligibility decisions (61 FR 51242). As described in the notice, NHTSA took that action to ensure that the list is more widely disseminated to government personnel who oversee vehicle imports and to interested members of the public. *See* 61 FR 51242–43. In the notice, NHTSA expressed its intention to annually revise the list as published in the appendix to include any additional vehicles decided by the agency to be eligible for importation since the list was last published. *See* 61 FR 51243. The agency stated that issuance of the document announcing these revisions will fulfill the annual publication requirements of 49 U.S.C. '' 30141(b)(2). *Ibid.*

### Rulemaking Analyses and Notices

*1. Executive Order 12866 (Federal Regulatory Planning and Review) and DOT Regulatory Policies and Procedures*

This rulemaking action was not reviewed under E.O. 12866. NHTSA has analyzed this rulemaking action and determined that it is not ''significant'' within the meaning of the Department of Transportation's regulatory policies and procedures.

*2. Regulatory Flexibility Act*

In accordance with the Regulatory Flexibility Act, NHTSA has evaluated the effects of this action on small entities. Based upon this evaluation, I certify that the revisions resulting from this rulemaking will not have a significant economic impact on a substantial number of small entities. Accordingly, the agency has not prepared a regulatory flexibility analysis.

Because this rulemaking does not impose any regulatory requirements, but merely furnishes information by revising the list in the Code of Federal Regulations of vehicles for which import eligibility decisions have been made, it has no economic impact.

*3. Executive Order 12612 (Federalism)*

This action has been analyzed in accordance with the principles and criteria contained in Executive Order 12612, and it has been determined that this rule does not have sufficient Federalism implications to warrant preparation of a Federalism Assessment. No State laws will be affected.

*4. National Environmental Policy Act*

The agency has considered the environmental implications of this rule in accordance with the National Environmental Policy Act of 1969 and determined that it will not significantly affect the human environment.

*5. Paperwork Reduction Act*

In accordance with the Paperwork Reduction Act of 1980, P.L. 96–511, the agency notes that there are no information collection requirements associated with this rulemaking action.

*6. Civil Justice Reform*

This rule does not have any retroactive effect. It does not repeal or modify any existing Federal regulations. A petition for reconsideration or other administrative proceeding will not be a prerequisite to an action seeking judicial review of this rule. This rule does not preempt the states from adopting laws or regulations on the same subject, except that it will preempt a state regulation that is in actual conflict with the Federal regulation or makes compliance with the Federal regulation impossible or interferes with the implementation of the Federal statute.

*7. Notice and Comment*

NHTSA finds that prior notice and opportunity for comment are unnecessary under 5 U.S.C. 553(b)(3)(B) because this action does not impose any regulatory requirements, but merely revises the list of vehicles not originally manufactured to conform to the Federal motor vehicle safety standards that NHTSA has decided to be eligible for importation into the United States to include all vehicles for which such decisions have been made since October 1, 2001.

In addition, so that the list of vehicles for which import eligibility decisions have been made may be included in the next edition of 49 CFR parts 400 to 999, which is due for revision on October 1, 2002, good cause exists to dispense with the requirement in 5 U.S.C. 553(d) for the effective date of the rule to be delayed for at least 30 days following its publication.

### List of Subjects in 49 CFR Part 593

Imports, Motor vehicle safety, Motor vehicles.

In consideration of the foregoing, Part 593 of Title 49 of the Code of Federal Regulations, Determinations that a vehicle not originally manufactured to

conform to the Federal Motor Vehicle Safety Standards is eligible for importation, is amended as follows:

## PART 593—[AMENDED]

1. The authority citation for Part 593 continues to read as follows:

**Authority:** 49 U.S.C. 322 and 30141(b); delegation of authority at 49 CFR 1.50.

2. Appendix A to Part 593 is revised to read as follows:

## Appendix A to Part 593—List of Vehicles Determined To Be Eligible for Importation

(a) Each vehicle on the following list is preceded by a vehicle eligibility number. The importer of a vehicle admissible under any eligibility decision must enter that number on the HS–7 Declaration Form accompanying entry to indicate that the vehicle is eligible for importation.

(1) ''VSA'' eligibility numbers are assigned to all vehicles that are decided to be eligible for importation on the initiative of the Administrator under Sec. 593.8.

(2) ''VSP'' eligibility numbers are assigned to vehicles that are decided to be eligible under Sec. 593.7(f), based on a petition from a manufacturer or registered importer submitted under Sec. 593.5(a)(1), which establishes that a substantially similar U.S.-certified vehicle exists.

(3) ''VCP'' eligibility numbers are assigned to vehicles that are decided to be eligible under Sec. 593.7(f), based on a petition from a manufacturer or registered importer submitted under Sec. 593.5(a)(2), which establishes that the vehicle has safety features that comply with, or are capable of being altered to comply with, all applicable Federal motor vehicle safety standards.

(b) Vehicles for which eligibility decisions have been made are listed alphabetically by make. Eligible models within each make are listed numerically by ''VSA,'' ''VSP,'' or ''VCP'' number.

(c) All hyphens used in the Model Year column mean ''through'' (for example, ''1973–1989'' means ''1973 through 1989'').

(d) The initials ''MC'' used in the Manufacturer column mean ''motorcycle.''

(e) The initials ''SWB'' used in the Model Type column mean ''Short Wheel Base.''

(f) The initials ''LWB'' used in the Model Type column mean ''Long Wheel Base.''

(g) For vehicles with a European country of origin, the term ''Model Year'' ordinarily means calendar year in which the vehicle was produced.

(h) All vehicles are left-hand-drive vehicles unless noted as RHD. The initials ''RHD'' used in the Model Type column mean ''Right-Hand-Drive.''

### Vehicles Certified by Their Original Manufacturer as Complying with All Applicable Canadian Motor Vehicle Safety Standards

| | |
|---|---|
| VSA–80 | (a) All passenger cars less than 25 years old that were manufactured before September 1, 1989;<br>(b) All passenger cars manufactured on or after September 1, 1989, and before September 1, 1996, that, as originally manufactured, are equipped with an automatic restraint system that complies with Federal Motor Vehicle Safety Standard (FMVSS) No. 208;<br>(c) All passenger cars manufactured on or after September 1, 1996, and before September 1, 2002, that, as originally manufactured, are equipped with an automatic restraint system that complies with FMVSS No. 208, and that comply with FMVSS No. 214;<br>(d) All passenger cars manufactured on or after September 1, 2002, and before September 1, 2007, that, as originally manufactured, are equipped with an automatic restraint system that complies with FMVSS No. 208, and that comply with FMVSS Nos. 201, 214, 225, and 401. |
| VSA–81 | (a) All multipurpose passenger vehicles, trucks, and buses with a GVWR of 4,536 kg (10,000 lb) or less that are less than 25 years old and that were manufactured before September 1, 1991;<br>(b) All multipurpose passenger vehicles, trucks, and buses with a GVWR of 4,536 kg (10,000 lb) or less that were manufactured on and after September 1, 1991, and before September 1, 1993 and that, as originally manufactured, comply with FMVSS Nos. 202 and 208.<br>(c) All multipurpose passenger vehicles, trucks, and buses with a GVWR of 4,536 kg (10,000 lb) or less that were manufactured on or after September 1, 1993, and before September 1, 1998, and that, as originally manufactured, comply with FMVSS Nos. 202, 208, and 216;<br>(d) All multipurpose passenger vehicles, trucks, and buses with a GVWR of 4,536 kg (10,000 lb) or less that were manufactured on or after September 1, 1998, and before September 1, 2002, and that, as originally manufactured, comply with FMVSS Nos. 202, 208, 214, and 216;<br>(e) All multipurpose passenger vehicles, trucks, and buses with a GVWR of 4,536 kg (10,000 lb) or less that were manufactured on or after September 1, 2002, and before September 1, 2007, and that, as originally manufactured, comply with FMVSS Nos. 201, 202, 208, 214, and 216, and, insofar as it is applicable, with FMVSS No. 225. |
| VSA–82 | All multipurpose passenger vehicles, trucks, and buses with a GVWR greater than 4,536 kg (10,000 lb) that are less than 25 years old. |
| VSA–83 | All trailers and motorcycles less than 25 years old. |

### Vehicles Manufactured for Other Than the Canadian Market

| Manufacturer | VSP | VSA | VCP | Model type | Body | Model year |
|---|---|---|---|---|---|---|
| Acura | 305 | | | Legend | | 1990–1992 |
| Acura | 51 | | | Legend | | 1988 |
| Acura | 77 | | | Legend | | 1989 |
| Alfa Romeo | 196 | | | 164 | | 1989 |
| Alfa Romeo | 76 | | | 164 | | 1991 |
| Alfa Romeo | 156 | | | 164 | | 1994 |
| Alfa Romeo | 124 | | | GTV | | 1985 |
| Alfa Romeo | 70 | | | Spider | | 1987 |
| Audi | 317 | | | 100 | | 1990–1992 |
| Audi | 93 | | | 100 | | 1989 |
| Audi | 244 | | | 100 | | 1993 |
| Audi | 160 | | | 200 Quattro | | 1987 |
| Audi | 223 | | | 80 | | 1988–1989 |

VEHICLES MANUFACTURED FOR OTHER THAN THE CANADIAN MARKET—Continued

| Manufacturer | VSP | VSA | VCP | Model type | Body | Model year |
|---|---|---|---|---|---|---|
| Audi | 352 | | | A4 | | 1996–2000 |
| Audi | 332 | | | A6 | | 1998–1999 |
| Audi | 337 | | | A8 | | 1997–2000 |
| Audi | 238 | | | Avant Quattro | | 1996 |
| Audi | 364 | | | TT | | 2000–2001 |
| BMW | 248 | | | 3 Series | | 1995–1997 |
| BMW | 356 | | | 3 Series | | 2000 |
| BMW | 379 | | | 3 Series | | 1999, 2001 |
| BMW | | 66 | | 316 | | 1978–1982 |
| BMW | 25 | | | 316 | | 1986 |
| BMW | | 23 | | 318i and 318iA | | 1981–1989 |
| BMW | | 16 | | 320, 320i, and 320iA | | 1978–1985 |
| BMW | 283 | | | 320I | | 1990–1991 |
| BMW | | 67 | | 323i | | 1978–1985 |
| BMW | | 30 | | 325, 325i, 325iA, and 325E | | 1985–1989 |
| BMW | | 24 | | 325e and 325eA | | 1984–1987 |
| BMW | 197 | | | 325i | | 1992–1994 |
| BMW | 96 | | | 325i | | 1991 |
| BMW | | 31 | | 325iS and 325iSA | | 1987–1989 |
| BMW | 205 | | | 325iX | | 1990 |
| BMW | | 33 | | 325iX and 325iXA | | 1988–1989 |
| BMW | 194 | | | 5 Series | | 1990–1995 |
| BMW | 249 | | | 5 Series | | 1996–1997 |
| BMW | 314 | | | 5 Series | | 1998–1999 |
| BMW | 345 | | | 5 Series | | 2000 |
| BMW | 4 | | | 518i | | 1986 |
| BMW | | 68 | | 520 and 520i | | 1978–1983 |
| BMW | 9 | | | 520iA | | 1989 |
| BMW | | 26 | | 524tdA | | 1985–1986 |
| BMW | | 69 | | 525 and 525i | | 1979–1982 |
| BMW | 5 | | | 525i | | 1989 |
| BMW | | 21 | | 528e and 528eA | | 1982–1988 |
| BMW | | 20 | | 528i and 528iA | | 1979–1984 |
| BMW | | 15 | | 530i and 530iA | | 1978 |
| BMW | | 22 | | 533i and 533iA | | 1983–1984 |
| BMW | | 25 | | 535i and 535iA | | 1985–1989 |
| BMW | 15 | | | 625CSi | | 1981 |
| BMW | 32 | | | 628CSi | | 1980 |
| BMW | | 18 | | 633CSi and 633CSiA | | 1978–1984 |
| BMW | | 27 | | 635, 635CSi, and 635CSiA | | 1979–1989 |
| BMW | 313 | | | 7 Series | | 1995–1999 |
| BMW | 366 | | | 7 Series | | 1999–2001 |
| BMW | 299 | | | 7 Series | | 1990–1991 |
| BMW | 299 | | | 7 Series | | 1993–1994 |
| BMW | 232 | | | 7 Series | | 1992 |
| BMW | | 70 | | 728 and 728i | | 1978–1985 |
| BMW | 14 | | | 728i | | 1986 |
| BMW | | 71 | | 730, 730i, and 730iA | | 1978–1980 |
| BMW | 6 | | | 730iA | | 1988 |
| BMW | | 72 | | 732i | | 1980–1984 |
| BMW | | 19 | | 733i and 733iA | | 1978–1984 |
| BMW | | 28 | | 735, 735i, and 735iA | | 1980–1989 |
| BMW | | 73 | | 745i | | 1980–1986 |
| BMW | 361 | | | 8 Series | | 1991–1995 |
| BMW | | 78 | | All other models except those in the M1 and Z1 series. | | 1978–1989 |
| BMW | | 29 | | L7 | | 1986–1987 |
| BMW | | 35 | | M3 | | 1988–1989 |
| BMW | | 34 | | M5 | | 1988 |
| BMW | | 32 | | M6 | | 1987–1988 |
| BMW | 260 | | | Z3 | | 1996–1998 |
| BMW | 350 | | | Z8 | | 2000–2001 |
| BMW MC | 228 | | | K1 | | 1990–1993 |
| BMW MC | 285 | | | K100 | | 1984–1992 |
| BMW MC | 303 | | | K1100, K1200 | | 1993–1998 |
| BMW MC | 229 | | | K75S | | 1987–1995 |
| BMW MC | 231 | | | R1100 | | 1994–1997 |
| BMW MC | 368 | | | R1100 | | 1998–2001 |
| BMW MC | 177 | | | R1100RS | | 1994 |
| BMW MC | 359 | | | R1200C | | 1998–2001 |
| BMW MC | 295 | | | R80, R100 | | 1986–1995 |
| Bristol Bus | | | 2 | VRT Bus-Double Decker | | 1978–1981 |

VEHICLES MANUFACTURED FOR OTHER THAN THE CANADIAN MARKET—Continued

| Manufacturer | VSP | VSA | VCP | Model type | Body | Model year |
|---|---|---|---|---|---|---|
| Cadillac | 300 | | | DeVille | | 1994–1999 |
| Cadillac | 375 | | | Seville | | 1991 |
| Chevrolet | 150 | | | 400SS | | 1995 |
| Chevrolet | 298 | | | Astro Van | | 1997 |
| Chevrolet | 349 | | | Blazer (plant code of "K" or "2" in the 11th position of the VIN). | | 1997 |
| Chevrolet | 369 | | | Cavalier | | 1997 |
| Chevrolet | 365 | | | Corvette | | 1992 |
| Chevrolet | 242 | | | Suburban | | 1989–1991 |
| Chrysler | 344 | | | Daytona | | 1992 |
| Chrysler | 373 | | | Grand Voyager | | 1998 |
| Chrysler | 276 | | | LHS | | 1996 |
| Chrysler | 216 | | | Shadow | | 1989 |
| Chrysler | 273 | | | Town and Country | | 1993 |
| Citroen | | | 1 | XM | | 1990–1992 |
| Dodge | 135 | | | Ram | | 1994–1995 |
| Ducati MC | 241 | | | 600SS | | 1992–1996 |
| Ducati MC | 220 | | | 748 Biposto | | 1996–1997 |
| Ducati MC | 201 | | | 900SS | | 1990–1996 |
| Eagle | 323 | | | Vision | | 1994 |
| Ferrari | | 76 | | 208, 208 Turbo (all models) | | 1978–1988 |
| Ferrari | | 36 | | 308 (all models) | | 1978–1985 |
| Ferrari | | 37 | | 328 (except GTS) | | 1985, 1988–1989 |
| Ferrari | | 37 | | 328 GTS | | 1985–1989 |
| Ferrari | 86 | | | 348 TB | | 1992 |
| Ferrari | 161 | | | 348 TS | | 1992 |
| Ferrari | 376 | | | 360 | | 2001 |
| Ferrari | 327 | | | 360 Modena | | 1999–2000 |
| Ferrari | 256 | | | 456 | | 1995 |
| Ferrari | 173 | | | 512 TR | | 1993 |
| Ferrari | 377 | | | 550 | | 2001 |
| Ferrari | 292 | | | 550 Marinello | | 1997–1999 |
| Ferrari | 355 | | | F355 | | 1996–1998 |
| Ferrari | 259 | | | F355 | | 1995 |
| Ferrari | 226 | | | F50 | | 1995 |
| Ferrari | | 38 | | GTO | | 1985 |
| Ferrari | | 74 | | Mondial (all models) | | 1980–1989 |
| Ferrari | | 39 | | Testarossa | | 1987–1989 |
| Ford | 265 | | | Bronco | | 1995–1996 |
| Ford | 322 | | | Escort (Nicaragua) | | 1996 |
| Ford | | | 9 | Escort RS | | 1994–1995 |
| Ford | 268 | | | Explorer | | 1991–1998 |
| Ford | 367 | | | Mustang | | 1993 |
| Ford | 250 | | | Windstar | | 1995–1998 |
| Freightliner | 179 | | | FLD12064ST | | 1991–1996 |
| Freightliner | 178 | | | FTLD112064SD | | 1991–1996 |
| GMC | 384 | | | Blazer | | 1978 |
| GMC | 383 | | | Jimmy | | 1980 |
| GMC | 134 | | | Suburban | | 1992–1994 |
| Harley Davidson | 202 | | | FX, FL, XL Series | | 1978–1997 |
| Harley Davidson | 253 | | | FX, FL, XL Series | | 1998 |
| Harley Davidson | 281 | | | FX, FL, XL Series | | 1999 |
| Harley Davidson | 321 | | | FX, FL, XL Series | | 2000 |
| Harley Davidson | 362 | | | FX, FL, XL Series | | 2001 |
| Harley Davidson | 372 | | | FX, FL, XL Series | | 2002 |
| Harley Davidson | 374 | | | VRSCA | | 2002 |
| Hobson | | | 8 | Horse Trailer | | 1985 |
| Honda | 319 | | | Accord | | 1992–1999 |
| Honda | 280 | | | Accord | | 1991 |
| Honda | 128 | | | Civic DX | | 1989 |
| Honda | 309 | | | Prelude | | 1994–1997 |
| Honda | 191 | | | Prelude | | 1989 |
| Honda MC | 106 | | | CB1000F | | 1988 |
| Honda MC | 348 | | | CMX250C | | 1978–1987 |
| Honda MC | 174 | | | CP450SC | | 1986 |
| Honda MC | 358 | | | RVF 400 | | 1994–2000 |
| Honda MC | 290 | | | VF750 | | 1994–1998 |
| Honda MC | 358 | | | VFR 400 | | 1994–2000 |
| Honda MC | 315 | | | VFR750 | | 1991–1997 |
| Honda MC | 34 | | | VFR750 | | 1990 |
| Honda MC | 315 | | | VFR800 | | 1998–1999 |

VEHICLES MANUFACTURED FOR OTHER THAN THE CANADIAN MARKET—Continued

| Manufacturer | VSP | VSA | VCP | Model type | Body | Model year |
|---|---|---|---|---|---|---|
| Honda MC | 294 | | | VT600 | | 1991–1998 |
| Hyundai | 269 | | | Elantra | | 1992–1995 |
| Jaguar | 78 | | | Sovereign | | 1993 |
| Jaguar | | 41 | | XJ6 | | 1978–1986 |
| Jaguar | 47 | | | XJ6 | | 1987 |
| Jaguar | 215 | | | XJ6 Sovereign | | 1988 |
| Jaguar | | 40 | | XJS | | 1980–1987 |
| Jaguar | 195 | | | XJS | | 1994–1996 |
| Jaguar | 175 | | | XJS | | 1991 |
| Jaguar | 129 | | | XJS | | 1992 |
| Jaguar | 336 | | | XJS, XJ6 | | 1988–1990 |
| Jaguar | 330 | | | XK–8 | | 1998 |
| Jaguar Daimler | 12 | | | Limousine | | 1985 |
| Jeep | 211 | | | Cherokee | | 1991 |
| Jeep | 164 | | | Cherokee | | 1992 |
| Jeep | 254 | | | Cherokee | | 1993 |
| Jeep | 180 | | | Cherokee | | 1995 |
| Jeep | 224 | | | CJ–7 | | 1979 |
| Jeep | 382 | | | Grand Cherokee | | 2001 |
| Jeep | 389 | | | Grand Cherokee | | 1997 |
| Jeep | 217 | | | Wrangler | | 1993 |
| Jeep | 255 | | | Wrangler | | 1995 |
| Jeep | 341 | | | Wrangler | | 1998 |
| Kawasaki MC | 233 | | | EL250 | | 1992–1994 |
| Kawasaki MC | 190 | | | KZ550B | | 1982 |
| Kawasaki MC | 182 | | | ZX1000–B1 | | 1988 |
| Kawasaki MC | 222 | | | ZX400 | | 1987–1997 |
| Kawasaki MC | 312 | | | ZX6, ZX7, ZX9, ZX10, ZX11 | | 1987–1999 |
| Kawasaki MC | 288 | | | ZX600 | | 1985–1998 |
| Kawasaki MC | 247 | | | ZZR1100 | | 1993–1998 |
| Ken-Mex | 187 | | | T800 | | 1990–1996 |
| Kenworth | 115 | | | T800 | | 1992 |
| KTM MC | 363 | | | Duke II | | 1995–2000 |
| Land Rover | 212 | | | Defender 110 | | 1993 |
| Land Rover | 338 | | | Discovery | | 1994–1998 |
| Lexus | 293 | | | GS300 | | 1993–1996 |
| Lexus | 307 | | | RX300 | | 1998–1999 |
| Lexus | 225 | | | SC300, SC400 | | 1991–1996 |
| Lincoln | 144 | | | Mark VII | | 1992 |
| Magni MC | 264 | | | Australia, Sfida | | 1996–1998 |
| Maserati | 155 | | | Bi–Turbo | | 1985 |
| Mazda | 184 | | | MX–5 Miata | | 1990–1993 |
| Mazda | 199 | | | RX–7 | | 1986 |
| Mazda | 279 | | | RX–7 | | 1987–1995 |
| Mazda | 42 | | | RX–7 | | 1978–1981 |
| Mazda | 351 | | | Xedos 9 | | 1995–2000 |
| Mercedes Benz | | 54 | | 190 | 201.022 | 1984 |
| Mercedes Benz | | 54 | | 190 D | 201.126 | 1984–1989 |
| Mercedes Benz | | 54 | | 190 D (2.2) | 201.122 | 1984–1989 |
| Mercedes Benz | | 54 | | 190 E | 201.028 | 1986–1989 |
| Mercedes Benz | 22 | | | 190 E | 201.024 | 1990 |
| Mercedes Benz | 45 | | | 190 E | 201.024 | 1991 |
| Mercedes Benz | 71 | | | 190 E | 201.028 | 1992 |
| Mercedes Benz | 126 | | | 190 E | 201.018 | 1992 |
| Mercedes Benz | | 54 | | 190 E (2.3) | 201.024 | 1983–1989 |
| Mercedes Benz | | 54 | | 190 E (2.6) | 201.029 | 1986–1989 |
| Mercedes Benz | | 54 | | 190 E 2.3 16 | 201.034 | 1984–1989 |
| Mercedes Benz | | 52 | | 200 | 123.220 | 1979–1985 |
| Mercedes Benz | | 52 | | 200 | 123.020 | 1978–1980 |
| Mercedes Benz | | 55 | | 200 | 124.020 | 1985 |
| Mercedes Benz | | 52 | | 200 D | 123.120 | 1980–1982 |
| Mercedes Benz | 17 | | | 200 D | 124.120 | 1986 |
| Mercedes Benz | 11 | | | 200 E | 124.021 | 1989 |
| Mercedes Benz | 109 | | | 200 E | 124.012 | 1991 |
| Mercedes Benz | 75 | | | 200 E | 124.019 | 1993 |
| Mercedes Benz | 3 | | | 200 TE | 124.081 | 1989 |
| Mercedes Benz | 168 | | | 220 E | | 1993 |
| Mercedes Benz | 167 | | | 220 TE Station Wagon | | 1993–1996 |
| Mercedes Benz | | 52 | | 230 | 123.023 | 1978–1985 |
| Mercedes Benz | | 52 | | 230 C | 123.043 | 1978–1980 |
| Mercedes Benz | | 52 | | 230 CE | 123.243 | 1980–1984 |
| Mercedes Benz | 84 | | | 230 CE | 124.043 | 1991 |

VEHICLES MANUFACTURED FOR OTHER THAN THE CANADIAN MARKET—Continued

| Manufacturer | VSP | VSA | VCP | Model type | Body | Model year |
|---|---|---|---|---|---|---|
| Mercedes Benz | 203 | | | 230 CE | | 1992 |
| Mercedes Benz | | 52 | | 230 E | 123.223 | 1978–1985 |
| Mercedes Benz | | 55 | | 230 E | 124.023 | 1985–1987 |
| Mercedes Benz | 1 | | | 230 E | 124.023 | 1988 |
| Mercedes Benz | 20 | | | 230 E | 124.023 | 1989 |
| Mercedes Benz | 19 | | | 230 E | 124.023 | 1990 |
| Mercedes Benz | 74 | | | 230 E | 124.023 | 1991 |
| Mercedes Benz | 127 | | | 230 E | 124.023 | 1993 |
| Mercedes Benz | | 52 | | 230 T | 123.083 | 1978–1985 |
| Mercedes Benz | | 52 | | 230 TE | 123.283 | 1978–1985 |
| Mercedes Benz | | 55 | | 230 TE | 124.083 | 1985 |
| Mercedes Benz | 2 | | | 230 TE | 124.083 | 1989 |
| Mercedes Benz | | 52 | | 240 D | 123.123 | 1978–1985 |
| Mercedes Benz | | 52 | | 240 TD | 123.183 | 1978–1985 |
| Mercedes Benz | | 52 | | 250 | 123.026 | 1978–1985 |
| Mercedes Benz | 172 | | | 250 D | | 1992 |
| Mercedes Benz | 245 | | | 250 E | | 1990–1993 |
| Mercedes Benz | | 55 | | 260 E | 124.026 | 1985–1989 |
| Mercedes Benz | 105 | | | 260 E | 124.026 | 1992 |
| Mercedes Benz | 18 | | | 260 SE | 126.020 | 1986 |
| Mercedes Benz | 28 | | | 260 SE | 126.020 | 1989 |
| Mercedes Benz | | 52 | | 280 | 123.030 | 1978–1985 |
| Mercedes Benz | | 52 | | 280 C | 123.050 | 1978–1980 |
| Mercedes Benz | | 52 | | 280 CE | 123.053 | 1978–1985 |
| Mercedes Benz | | 52 | | 280 E | 123.033 | 1978–1985 |
| Mercedes Benz | 166 | | | 280 E | | 1993 |
| Mercedes Benz | | 53 | | 280 S | 126.021 | 1980–1983 |
| Mercedes Benz | | 51 | | 280 S | 116.020 | 1978–1980 |
| Mercedes Benz | | 44 | | 280 SC | 107.022 | 1978–1981 |
| Mercedes Benz | | 51 | | 280 SE | 116.024 | 1978–1988 |
| Mercedes Benz | | 53 | | 280 SE | 126.022 | 1980–1985 |
| Mercedes Benz | | 53 | | 280 SEL | 126.023 | 1980–1985 |
| Mercedes Benz | | 51 | | 280 SEL | 116.025 | 1978–1980 |
| Mercedes Benz | | 44 | | 280 SL | 107.042 | 1978–1985 |
| Mercedes Benz | | 52 | | 280 TE | 123.093 | 1978–1985 |
| Mercedes Benz | | 52 | | 300 CD | 123.150 | 1978–1985 |
| Mercedes Benz | | 55 | | 300 CE | 124.050 | 1988–1989 |
| Mercedes Benz | 64 | | | 300 CE | 124.051 | 1990 |
| Mercedes Benz | 83 | | | 300 CE | 124.051 | 1991 |
| Mercedes Benz | 117 | | | 300 CE | 124.050 | 1992 |
| Mercedes Benz | | 52 | | 300 D | 123.133 | 1978–1985 |
| Mercedes Benz | | 52 | | 300 D | 123.130 | 1978–1985 |
| Mercedes Benz | | 55 | | 300 D | 124.130 | 1985–1986 |
| Mercedes Benz | | 55 | | 300 D Turbo | 124.133 | 1985–1989 |
| Mercedes Benz | | 55 | | 300 E | 124.030 | 1985–1989 |
| Mercedes Benz | 114 | | | 300 E | 124.031 | 1992 |
| Mercedes Benz | 192 | | | 300 E 4-Matic | | 1990–1993 |
| Mercedes Benz | | 53 | | 300 SD | 126.120 | 1981–1989 |
| Mercedes Benz | | 53 | | 300 SE | 126.024 | 1985–1989 |
| Mercedes Benz | 68 | | | 300 SE | 126.024 | 1990 |
| Mercedes Benz | | 53 | | 300 SEL | 126.025 | 1986–1989 |
| Mercedes Benz | 21 | | | 300 SEL | 126.025 | 1990 |
| Mercedes Benz | | 44 | | 300 SL | 107.041 | 1986–1988 |
| Mercedes Benz | 7 | | | 300 SL | 107.041 | 1989 |
| Mercedes Benz | 54 | | | 300 SL | 129.006 | 1992 |
| Mercedes Benz | | 52 | | 300 TD | 123.193 | 1978–1985 |
| Mercedes Benz | | 55 | | 300 TD Turbo | 124.193 | 1986–1989 |
| Mercedes Benz | | 55 | | 300 TE | 124.090 | 1986–1989 |
| Mercedes Benz | 40 | | | 300 TE | 124.090 | 1990 |
| Mercedes Benz | 193 | | | 300 TE | | 1992 |
| Mercedes Benz | 142 | | | 320 SL | | 1992 |
| Mercedes Benz | 310 | | | 320 CE | | 1993 |
| Mercedes Benz | | 44 | | 350 SC | 107.023 | 1978–1979 |
| Mercedes Benz | | 51 | | 350 SE | 116.028 | 1978–1980 |
| Mercedes Benz | | 51 | | 350 SEL | 116.029 | 1978–1980 |
| Mercedes Benz | | 44 | | 350 SL | 107.043 | 1978 |
| Mercedes Benz | | 44 | | 380 SC | 107.025 | 1981–1989 |
| Mercedes Benz | | 53 | | 380 SE | 126.032 | 1979–1989 |
| Mercedes Benz | | 53 | | 380 SE | 126.043 | 1982–1989 |
| Mercedes Benz | | 53 | | 380 SEL | 126.033 | 1980–1989 |
| Mercedes Benz | | 44 | | 380 SL | 107.045 | 1980–1989 |
| Mercedes Benz | 296 | | | 400 SE | | 1992–1994 |

VEHICLES MANUFACTURED FOR OTHER THAN THE CANADIAN MARKET—Continued

| Manufacturer | VSP | VSA | VCP | Model type | Body | Model year |
|---|---|---|---|---|---|---|
| Mercedes Benz | 169 | | | 420 E | | 1993 |
| Mercedes Benz | | 53 | | 420 SE | 126.034 | 1985–1989 |
| Mercedes Benz | 230 | | | 420 SE | | 1990–1991 |
| Mercedes Benz | 209 | | | 420 SEC | | 1990 |
| Mercedes Benz | | 53 | | 420 SEL | 126.035 | 1986–1989 |
| Mercedes Benz | 48 | | | 420 SEL | 126.035 | 1990 |
| Mercedes Benz | | 44 | | 420 SL | 107.047 | 1986 |
| Mercedes Benz | | 44 | | 450 SC | 107.024 | 1978–1989 |
| Mercedes Benz | | 51 | | 450 SE | 116.032 | 1978–1980 |
| Mercedes Benz | | 51 | | 450 SEL | 116.033 | 1978–1988 |
| Mercedes Benz | | 51 | | 450 SEL (6.9) | 116.036 | 1978–1988 |
| Mercedes Benz | | 44 | | 450 SL | 107.044 | 1978–1989 |
| Mercedes Benz | 56 | | | 500 E | 124.036 | 1991 |
| Mercedes Benz | | 44 | | 500 SC | 107.026 | 1978–1981 |
| Mercedes Benz | | 53 | | 500 SE | 126.036 | 1980–1986 |
| Mercedes Benz | 35 | | | 500 SE | 126.036 | 1988 |
| Mercedes Benz | 154 | | | 500 SE | | 1990 |
| Mercedes Benz | 26 | | | 500 SE | 140.050 | 1991 |
| Mercedes Benz | | 53 | | 500 SEC | 126.044 | 1981–1989 |
| Mercedes Benz | 66 | | | 500 SEC | 126.044 | 1990 |
| Mercedes Benz | | 53 | | 500 SEL | 126.037 | 1980–1989 |
| Mercedes Benz | 23 | | | 500 SEL | 129.066 | 1989 |
| Mercedes Benz | 153 | | | 500 SEL | | 1990 |
| Mercedes Benz | 63 | | | 500 SEL | 126.037 | 1991 |
| Mercedes Benz | | 44 | | 500 SL | 107.046 | 1980–1989 |
| Mercedes Benz | 33 | | | 500 SL | 129.066 | 1991 |
| Mercedes Benz | 60 | | | 500 SL | 129.006 | 1992 |
| Mercedes Benz | | 53 | | 560 SEC | 126.045 | 1986–1989 |
| Mercedes Benz | 141 | | | 560 SEC | 126.045 | 1990 |
| Mercedes Benz | 333 | | | 560 SEC | | 1991 |
| Mercedes Benz | | 53 | | 560 SEL | 126.039 | 1986–1989 |
| Mercedes Benz | 89 | | | 560 SEL | 126.039 | 1990 |
| Mercedes Benz | | 44 | | 560 SL | 107.048 | 1986–1989 |
| Mercedes Benz | | 43 | | 600 | 100.012 | 1978–1981 |
| Mercedes Benz | | 43 | | 600 Landaulet | 100.015 | 1978–1981 |
| Mercedes Benz | | 43 | | 600 Long 4dr | 100.014 | 1978–1981 |
| Mercedes Benz | | 43 | | 600 Long 6dr | 100.016 | 1978–1981 |
| Mercedes Benz | 185 | | | 600 SEC Coupe | | 1993 |
| Mercedes Benz | 121 | | | 600 SL | 129.076 | 1992 |
| Mercedes Benz | | 77 | | All other models except Model ID 114 and 115 with sales designations ''long,'' ''station wagon,'' or ambulance''. | | 1978–1989 |
| Mercedes Benz | 331 | | | C Class | | 1994–1999 |
| Mercedes Benz | 370 | | | CL500 | | 1999–2001 |
| Mercedes Benz | 277 | | | CL500 | | 1998 |
| Mercedes Benz | 370 | | | CL600 | | 1999–2001 |
| Mercedes Benz | 380 | | | CLK | | 1999–2001 |
| Mercedes Benz | 357 | | | CLK320 | | 1998 |
| Mercedes Benz | 354 | | | E Series | | 1991–1995 |
| Mercedes Benz | 278 | | | E200 | | 1995–1998 |
| Mercedes Benz | 207 | | | E200 | | 1994 |
| Mercedes Benz | 168 | | | E220 | | 1994–1996 |
| Mercedes Benz | 245 | | | E250 | | 1994–1995 |
| Mercedes Benz | 166 | | | E280 | | 1994–1996 |
| Mercedes Benz | 240 | | | E320 | | 1994–1998 |
| Mercedes Benz | 318 | | | E320 Station Wagon | | 1994–1999 |
| Mercedes Benz | 169 | | | E420 | | 1994–1996 |
| Mercedes Benz | 304 | | | E500 | | 1995–1997 |
| Mercedes Benz | 163 | | | E500 | | 1994 |
| Mercedes Benz | | | 18 | G-Wagon | | 1999–2000 |
| Mercedes Benz | | | 3 | G-Wagon 300 | 463.228 | 1993 |
| Mercedes Benz | | | 5 | G-Wagon 300 | 463.228 | 1994 |
| Mercedes Benz | | | 5 | G-Wagon 300 | 463.228 | 1990–1992 |
| Mercedes Benz | | | 6 | G-Wagon 320 | | 1995 |
| Mercedes Benz | | | 11 | G-Wagon 463 | | 1996 |
| Mercedes Benz | | | 15 | G-Wagon 463 | | 1997 |
| Mercedes Benz | | | 16 | G-Wagon 463 | | 1998 |
| Mercedes Benz | | | 21 | G-Wagon 463 LWB | | 2001 |
| Mercedes Benz | | | 13 | G-Wagon 463 LWB V–8 | | 1992–1996 |
| Mercedes Benz | | | 14 | G-Wagon 463 SWB | | 1990–1996 |
| Mercedes Benz | 342 | | | S Class | | 1995–1998 |

VEHICLES MANUFACTURED FOR OTHER THAN THE CANADIAN MARKET—Continued

| Manufacturer | VSP | VSA | VCP | Model type | Body | Model year |
|---|---|---|---|---|---|---|
| Mercedes Benz | 387 | | | S Class | W220 | 1999–2002 |
| Mercedes Benz | 325 | | | S Class | | 1999 |
| Mercedes Benz | 85 | | | S280 | 140.028 | 1994 |
| Mercedes Benz | 236 | | | S320 | | 1994 |
| Mercedes Benz | 267 | | | S420 | | 1994 |
| Mercedes Benz | 371 | | | S500 | | 2000–2001 |
| Mercedes Benz | 235 | | | S500 | | 1994 |
| Mercedes Benz | 297 | | | S600 | | 1995–1999 |
| Mercedes Benz | 371 | | | S600 | | 2000–2001 |
| Mercedes Benz | 185 | | | S600 Coupe | | 1994 |
| Mercedes Benz | 214 | | | S600L | | 1994 |
| Mercedes Benz | 343 | | | SE Class | | 1992–1994 |
| Mercedes Benz | 343 | | | SEL Class | | 1992–1994 |
| Mercedes Benz | 329 | | | SL Class | | 1993–1996 |
| Mercedes Benz | 386 | | | SL Class | W129 | 1997–2000 |
| Mercedes Benz | | | 19 | SL Class | R230 | 2001–2002 |
| Mercedes Benz | 257 | | | SLK | | 1997–1998 |
| Mercedes Benz | 381 | | | SLK | | 2000–2001 |
| Mitsubishi | 13 | | | Galant SUP | | 1989 |
| Mitsubishi | 8 | | | Galant VX | | 1988 |
| Mitsubishi | 170 | | | Pajero | | 1984 |
| Moto Guzzi MC | 118 | | | Daytona | | 1993 |
| Moto Guzzi MC | 264 | | | Daytona RS | | 1996–1998 |
| Nissan | 162 | | | 240SX | | 1988 |
| Nissan | 198 | | | 300ZX | | 1984 |
| Nissan | | 75 | | Fairlady and Fairlady Z | | 1978–1979 |
| Nissan | | | 17 | GTS, GTR (RHD) | | 1990–1999 |
| Nissan | 138 | | | Maxima | | 1989 |
| Nissan | 316 | | | Pathfinder | | 1987–1995 |
| Nissan | 139 | | | Stanza | | 1987 |
| Nissan | | 75 | | Z and 280Z | | 1978–1981 |
| Peugeot | | 65 | | 405 | | 1989 |
| Plymouth | 353 | | | Voyager | | 1996 |
| Pontiac | 189 | | | Transport MPV | | 1993 |
| Porsche | 346 | | | 911 | | 1997–2000 |
| Porsche | 29 | | | 911 C4 | | 1990 |
| Porsche | | 56 | | 911 Cabriolet | | 1984–1989 |
| Porsche | | 56 | | 911 Carrera | | 1978–1989 |
| Porsche | 165 | | | 911 Carrera | | 1995–1996 |
| Porsche | 52 | | | 911 Carrera | | 1992 |
| Porsche | 165 | | | 911 Carrera | | 1993 |
| Porsche | 103 | | | 911 Carrera | | 1994 |
| Porsche | | 56 | | 911 Coupe | | 1978–1989 |
| Porsche | | 56 | | 911 Targa | | 1978–1989 |
| Porsche | | 56 | | 911 Turbo | | 1978–1989 |
| Porsche | 125 | | | 911 Turbo | | 1992 |
| Porsche | 347 | | | 911 Turbo | | 2001 |
| Porsche | | 59 | | 924 Coupe | | 1978–1989 |
| Porsche | | 59 | | 924 S | | 1987–1989 |
| Porsche | | 59 | | 924 Turbo Coupe | | 1979–1989 |
| Porsche | 266 | | | 928 | | 1991–1996 |
| Porsche | 272 | | | 928 | | 1997–1998 |
| Porsche | | 60 | | 928 Coupe | | 1978–1989 |
| Porsche | | 60 | | 928 GT | | 1979–1989 |
| Porsche | | 60 | | 928 S Coupe | | 1983–1989 |
| Porsche | | 60 | | 928 S4 | | 1979–1989 |
| Porsche | 210 | | | 928 S4 | | 1990 |
| Porsche | 97 | | | 944 | | 1990 |
| Porsche | | 61 | | 944 Coupe | | 1982–1989 |
| Porsche | | 61 | | 944 S Coupe | | 1987–1989 |
| Porsche | 152 | | | 944 S2 2 door Hatchback | | 1990 |
| Porsche | | 61 | | 944 Turbo Coupe | | 1985–1989 |
| Porsche | 116 | | | 946 | | 1994 |
| Porsche | | 79 | | All models except Model 959 | | 1978–1989 |
| Porsche | 390 | | | Boxster | | 1997–2001 |
| Porsche | 390 | | | Boxster (before 9/1/2002) | | 2002 |
| Porsche | | | 20 | GT2 | | 2001 |
| Porsche | 388 | | | GT2 | | 2002 |
| Rolls Royce | 340 | | | Bentley | | 1987–1989 |
| Rolls Royce | 186 | | | Bentley Brooklands | | 1993 |
| Rolls Royce | 258 | | | Bentley Continental R | | 1990–1993 |
| Rolls Royce | 53 | | | Bentley Turbo | | 1986 |

VEHICLES MANUFACTURED FOR OTHER THAN THE CANADIAN MARKET—Continued

| Manufacturer | VSP | VSA | VCP | Model type | Body | Model year |
|---|---|---|---|---|---|---|
| Rolls Royce | 291 | | | Bentley Turbo R | | 1992–1993 |
| Rolls Royce | 243 | | | Bentley Turbo R | | 1995 |
| Rolls Royce | 122 | | | Camargue | | 1984–1985 |
| Rolls Royce | 339 | | | Corniche | | 1978–1985 |
| Rolls Royce | | 62 | | Silver Shadow | | 1978–1979 |
| Rolls Royce | 188 | | | Silver Spur | | 1984 |
| Saab | 158 | | | 900 | | 1983 |
| Saab | 270 | | | 900 S | | 1987–1989 |
| Saab | 219 | | | 900 SE | | 1990–994 |
| Saab | 219 | | | 900 SE | | 1996–1997 |
| Saab | 213 | | | 900 SE | | 1995 |
| Saab | 59 | | | 9000 | | 1988 |
| Saab | 334 | | | 9000 | | 1994 |
| Sprite | | | 12 | Musketeer Trailer | | 1980 |
| Suzuki MC | 111 | | | GS 850 | | 1985 |
| Suzuki MC | 287 | | | GSF 750 | | 1996–1998 |
| Suzuki MC | 208 | | | GSX 750 | | 1983 |
| Suzuki MC | 275 | | | GSXR 750 | | 1986–1998 |
| Suzuki MC | 227 | | | GSXR1100 | | 1986–1997 |
| Toyota | 308 | | | Avalon | | 1995–1998 |
| Toyota | | 63 | | Camry | | 1987–1988 |
| Toyota | 39 | | | Camry | | 1989 |
| Toyota | | 64 | | Celica | | 1987–1988 |
| Toyota | | 65 | | Corolla | | 1987–1988 |
| Toyota | 252 | | | Land Cruiser | | 1981–1988 |
| Toyota | 218 | | | Land Cruiser | | 1990–1996 |
| Toyota | 320 | | | Land Cruiser | | 1978–1980 |
| Toyota | 101 | | | Land Cruiser | | 1989 |
| Toyota | 324 | | | MR2 | | 1990–1991 |
| Toyota | 302 | | | Previa | | 1993–1997 |
| Toyota | 326 | | | Previa | | 1991–1992 |
| Toyota | 328 | | | RAV4 | | 1996 |
| Toyota | 200 | | | Van | | 1987–1988 |
| Triumph MC | 311 | | | Thunderbird | | 1995–1999 |
| Vespa MC | 378 | | | ET2, ET4 | | 2001–2002 |
| Volkswagen | 237 | | | Beetle Convertible | | 1978–1979 |
| Volkswagen | 306 | | | Eurovan | | 1993–1994 |
| Volkswagen | 159 | | | Golf | | 1987 |
| Volkswagen | 80 | | | Golf | | 1988 |
| Volkswagen | 92 | | | Golf | | 1993 |
| Volkswagen | 73 | | | Golf Rally | | 1988 |
| Volkswagen | 149 | | | GTI (Canadian) | | 1991 |
| Volkswagen | 274 | | | Jetta | | 1994–1996 |
| Volkswagen | 148 | | | Passat 4 door Sedan | | 1992 |
| Volkswagen | | 42 | | Scirocco | | 1986 |
| Volkswagen | 284 | | | Transporter | | 1988—1989 |
| Volkswagen | 251 | | | Transporter | | 1990 |
| Volvo | 43 | | | 262C | | 1981 |
| Volvo | 87 | | | 740 Sedan | | 1988 |
| Volvo | 286 | | | 850 Turbo | | 1995—1998 |
| Volvo | 95 | | | 940 GL | | 1993 |
| Volvo | 132 | | | 945 GL | | 1994 |
| Volvo | 176 | | | 960 Sedan & Wagon | | 1994 |
| Volvo | 335 | | | S70 | | 1998—2000 |
| Yamaha MC | 113 | | | FJ1200 | | 1991 |
| Yamaha MC | 360 | | | R1 | | 2000 |
| Yamaha MC | 171 | | | RD–350 | | 1983 |
| Yamaha MC | 301 | | | Virago | | 1990—1998 |

Issued on September 13, 2002.

**Annette M. Sandberg,**

*Deputy Administrator.*

[FR Doc. 02–23755 Filed 9–18–02; 8:45 am]

**BILLING CODE 4910–59–P**

## DEPARTMENT OF TRANSPORTATION

### National Highway Traffic Safety Administration

**[Docket No. NHTSA–2002–12937, Notice 2]**

### Final Decision That Certain Nonconforming Vehicles Are Eligible for Importation

**AGENCY:** National Highway Traffic Safety Administration, DOT.

**ACTION:** Final decision that certain nonconforming vehicles are eligible for importation.

**SUMMARY:** This document announces a final decision by the National Highway Traffic Safety Administration (NHTSA) that certain vehicles that do not comply with all applicable Federal motor vehicle safety standards, but that are certified by their original manufacturer as complying with all applicable Canadian motor vehicle safety standards, are eligible for importation into the United States. The vehicles in question either (1) are substantially similar to vehicles that were certified by their manufacturers as complying with the U.S. safety standards and are capable of being readily altered to conform to those standards, or (2) have safety features that comply with, or are capable of being altered to comply with, all U.S. safety standards.

**DATE:** This decision is effective on September 19, 2002.

**FOR FURTHER INFORMATION CONTACT:** Luke Loy, Office of Vehicle Safety Compliance, NHTSA (202–366–5308).

**SUPPLEMENTARY INFORMATION:**

## Background

Under 49 U.S.C. 30141(a)(1)(A), a motor vehicle that was not originally manufactured to conform to all applicable Federal motor vehicle safety standards (FMVSS) shall be refused admission into the United States unless NHTSA has decided, either pursuant to a petition from the manufacturer or registered importer or on its own initiative, that the motor vehicle (1) is substantially similar to a motor vehicle of the same model year that was originally manufactured for importation into and sale in the United States and certified by its manufacturer as complying with all applicable FMVSS, and (2) is capable of being readily altered to conform to all applicable FMVSS. Where there is no substantially similar U.S.-certified motor vehicle, 49 U.S.C. 30141(a)(1)(B) permits a nonconforming motor vehicle to be admitted into the United States if its safety features comply with, or are capable of being altered to comply with, all applicable FMVSS based on destructive test data or such other evidence as NHTSA decides to be adequate.

On August 6, 2002, NHTSA published a notice in the **Federal Register** at 67 FR 50979 announcing that it had made a tentative decision that certain motor vehicles that do not comply with all applicable FMVSS, but that are certified by their original manufacturers as complying with all applicable Canadian motor vehicle safety standards, are eligible for importation into the United States. The notice identified these vehicles as:

(a) All passenger cars manufactured on or after September 1, 2002 and before September 1, 2007, that, as originally manufactured, are equipped with an automatic restraint system that complies FMVSS No. 208, and that comply with FMVSS No. 201, 214, 225, and 401; and

(b) All multipurpose passenger vehicles, trucks and buses with a gross vehicle weight rating (GVWR) of 4,535 kg (10,000 lb) or less that were manufactured on or after September 1, 2002, and before September 1, 2007, and that, as originally manufactured, comply with FMVSS Nos. 201, 202, 208, 214, and 216, and, insofar as it is applicable, with FMVSS No. 225.

The reader is referred to the August 6 notice for a full discussion of the factors leading to the tentative decision. In accordance with 49 U.S.C. 30141(b), the notice solicited public comments on the tentative decision. No comments were submitted in response to the notice. Accordingly, we are adopting the tentative decision as a final decision.

## Final Decision

In consideration of the foregoing, the Administrator of NHTSA hereby decides that:

(a) All passenger cars manufactured on or after September 1, 2002 and before September 1, 2007, that, as originally manufactured, are equipped with an automatic restraint system that complies with FMVSS No. 208, and that comply with FMVSS No. 201, 214, 225, and 401; and (b) All multipurpose passenger vehicles, trucks and buses with a GVWR of 4,535 kg (10,000 lb) or less that were manufactured on or after September 1, 2002, and before September 1, 2007, and that, as originally manufactured, comply with FMVSS Nos. 201, 202, 208, 214, and 216, and, insofar as it is applicable, with FMVSS No. 225;

that are certified by their original manufacturer as complying with all applicable Canadian motor vehicle safety standards, are eligible for importation into the United States on the basis that either:

1. they are substantially similar to vehicles of the same make, model, and model year originally manufactured for importation into and sale in the United States, or originally manufactured in the United States for sale therein, and certified as complying with all applicable FMVSS, and are capable of being readily altered to conform to all applicable FMVSS, or

2. they have safety features that comply with, or are capable of being altered to comply with, all applicable FMVSS.

### Vehicle Eligibility Number

The importer of a vehicle admissible under any final decision must indicate on the form HS–7 accompanying entry the appropriate vehicle eligibility number indicating that the vehicle is eligible for entry. All passenger cars admissible under this decision are eligible for entry under vehicle eligibility number VSA–80, and all MPVs, trucks, and buses admissible under this decision are eligible for entry under vehicle eligibility number VSA–81.

**Authority:** 49 U.S.C. 30141(a)(1)(A), (a)(1)(B), and (b)(1); 49 CFR 593.8; delegation of authority at 49 CFR 1.50.

Issued on: September 13, 2002.

**Annette M. Sandberg,**

*Deputy Administrator.*

[FR Doc. 02–23756 Filed 9–18–02; 8:45 am]

BILLING CODE 4910–59–P

Federal Register

Thursday,
September 19, 2002

# Part III

# Department of the Interior

## Fish and Wildlife Service

## 50 CFR Part 20

## Migratory Bird Hunting; Final Frameworks for Late-Season Migratory Bird Hunting Regulations; Final Rule

**DEPARTMENT OF THE INTERIOR**

**Fish and Wildlife Service**

**50 CFR Part 20**

**RIN 1018–AI30**

# Migratory Bird Hunting; Final Frameworks for Late-Season Migratory Bird Hunting Regulations

**AGENCY:** Fish and Wildlife Service, Interior.

**ACTION:** Final rule.

**SUMMARY:** The Fish and Wildlife Service (Service or we) prescribes final late-season frameworks from which States may select season dates, limits, and other options for the 2002–03 migratory bird hunting seasons. These late seasons include most waterfowl seasons, the earliest of which commences on September 21, 2002. The effect of this final rule is to facilitate the States' selection of hunting seasons and to further the annual establishment of the late-season migratory bird hunting regulations.

**DATES:** This rule takes effect on September 19, 2002.

**ADDRESSES:** States should send their season selections to: Chief, Division of Migratory Bird Management, U.S. Fish and Wildlife Service, Department of the Interior, ms 634–ARLSQ, 1849 C Street, NW., Washington, DC 20240. You may inspect comments during normal business hours in room 634, Arlington Square Building, 4401 N. Fairfax Drive, Arlington, Virginia.

**FOR FURTHER INFORMATION CONTACT:** Robert J. Blohm or Ron W. Kokel, Division of Migratory Bird Management, U.S. Fish and Wildlife Service, (703) 358–1714.

**SUPPLEMENTARY INFORMATION:**

## Regulations Schedule for 2002

On March 19, 2002, we published in the **Federal Register** (67 FR 12501) a proposal to amend 50 CFR part 20. The proposal provided a background and overview of the migratory bird hunting regulations process, and dealt with the establishment of seasons, limits, the proposed regulatory alternatives for the 2002–03 duck hunting season, and other regulations for migratory game birds under §§ 20.101 through 20.107, 20.109, and 20.110 of subpart K. On June 11, 2002, we published in the **Federal Register** (67 FR 40128) a second document providing supplemental proposals for early- and late-season migratory bird hunting regulations frameworks and the proposed regulatory alternatives for the 2002–03 duck hunting season. The June 11 supplement also provided detailed information on the 2002–03 regulatory schedule and announced the Service Migratory Bird Regulations Committee (SRC) and Flyway Council meetings.

On June 19–20, we held open meetings with the Flyway Council Consultants at which the participants reviewed information on the current status of migratory shore and upland game birds and developed recommendations for the 2002–03 hunting regulations for these species plus regulations for migratory game birds in Alaska, Puerto Rico, and the Virgin Islands, special September waterfowl seasons, special sea duck seasons in the Atlantic Flyway, and extended falconry seasons. In addition, we reviewed and discussed preliminary information on the status of waterfowl as it related to the development and selection of the 2002–03 duck season regulatory packages. On July 17, we published in the **Federal Register** (67 FR 47224) a third document specifically dealing with the proposed frameworks for early-season regulations and the final regulatory alternatives for the 2002-03 duck hunting season. In the August 23, 2002, **Federal Register** (67 FR 54702), we published final frameworks for early migratory bird hunting seasons from which wildlife conservation agency officials from the States, Puerto Rico, and the Virgin Islands selected 2002–03 early-season hunting dates, hours, areas, and limits. Subsequently, on August 29, 2002, we published a final rule in the **Federal Register** (67 FR 55624) amending subpart K of title 50 CFR part 20 to set hunting seasons, hours, areas, and limits for early seasons.

On July 31 and August 1, 2002, we held open meetings with the Flyway Council Consultants at which the participants reviewed the status of waterfowl and developed recommendations for the 2002–03 regulations for these species. On August 16, 2002, we published in the **Federal Register** (67 FR 53690) the proposed frameworks for the 2002–03 late-season migratory bird hunting regulations. This document establishes final frameworks for late-season migratory bird hunting regulations for the 2002–03 season. We will publish State selections in the **Federal Register** as amendments to §§ 20.101 through 20.107, and § 20.109 of title 50 CFR part 20.

## Population Status and Harvest

A brief summary of information on the status and harvest of waterfowl excerpted from various reports was included in the August 16 supplemental proposed rule. For more detailed information on methodologies and results, complete copies of the various reports are available at the address indicated under the caption **ADDRESSES** or from our Web site at *http://migratorybirds.fws.gov*.

## Review of Public Comments and Flyway Council Recommendations

The preliminary proposed rulemaking, which appeared in the March 19 **Federal Register**, opened the public comment period for migratory game bird hunting regulations. The supplemental proposed rule, which appeared in the June 11 **Federal Register**, extended the public comment period for the proposed regulatory alternatives for the 2002–03 duck hunting season. The public comment period for the proposed regulatory alternatives ended July 5, 2002, and the public comment period for late-season issues ended on August 30, 2002. Written comments relating to the proposed late-season frameworks are summarized and discussed below in the order used in the March 19 proposed rule. Only the numbered items pertaining to late seasons for which written comments were received are included. Consequently, the issues do not follow in direct numerical or alphabetical order.

We also received recommendations from all four Flyway Councils. Some recommendations supported continuation of last year's frameworks. Due to the comprehensive nature of the annual review of the frameworks performed by the Councils, support for continuation of last year's frameworks is assumed for items for which no recommendations were received. Council recommendations for changes in the frameworks are summarized below.

## General

*Written Comments:* An individual from Wisconsin requested an additional 15 minutes of shooting time at the end of the day.

*Service Response:* The current shooting hours are consistent with the Service's long-term strategy for shooting hours, published in the September 21, 1990, **Federal Register** (55 FR 38898). Thus, the frameworks herein provide for shooting hours of one-half hour before sunrise to sunset, unless otherwise specified.

### *1. Ducks*

Categories used to discuss issues related to duck harvest management are: (A) Harvest Strategy Considerations, (B) Regulatory Alternatives, (C) Zones and

Split Seasons, and (D) Special Seasons/Species Management. The categories correspond to previously published issues/discussion, and only those containing substantial recommendations are discussed below.

B. Regulatory Alternatives

*Council Recommendations:* The Atlantic Flyway Council and the Lower-Region Regulations Committee of the Mississippi Flyway Council recommended adoption of the ''liberal'' regulations package for duck hunting seasons in 2002–03.

The Upper-Region Regulations Committee of the Mississippi Flyway Council and the Pacific Flyway Council recommended adoption of the ''moderate'' regulations package for duck hunting seasons in 2002–03.

The Central Flyway Council recommended the adoption of the ''liberal'' regulatory package with the exception of the framework closing date. The Council recommended a framework closing date of the Sunday nearest January 20.

*Written Comments:* The New York State Division of Fish, Wildlife and Marine Resources questioned implications from the Service that the use of the eastern mallard model does not adequately account for other ducks stocks harvested in the Atlantic Flyway.

Senator Lincoln from Arkansas requested that the Service remain mindful of the economic impacts of cutting the season from 60 to 45 days. The Governor of Arkansas also cited economic concerns with a shorter season and requested consideration of a reduced bag limit rather than a reduction in the season length.

Organizations from Illinois and Nevada questioned the Service's selection of the ''liberal'' alternative and extended framework opening and closing dates in the face of declining population levels and breeding habitat conditions. The Illinois organization urged that proper restrictions on season length and bag limits be enacted to protect the resource, while the Nevada organization encouraged reconsideration of this year's framework.

An organization from California supported the extended framework closing date, while several groups and individuals from Minnesota did not support the extended frameworks dates. Some also requested reduced daily bag limits. Another individual from Minnesota expressed support for a 45-day season.

An individual from Indiana recommended selection of the ''very restrictive'' regulatory alternative, while an individual from Illinois recommended a 30-day season with a 2-bird daily bag limit. An individual from California suggested the need for very conservative hunting regulations to protect future waterfowl populations. An individual from Missouri was concerned about the severe drought and poor habitat faced by many birds this spring and summer. An individual from Utah was concerned about recent changes to the regulations setting process and the perception by many that the process has become politicized.

*Service Response:* The Service continues to support use of the Adaptive Harvest Management (AHM) process to suggest appropriate duck hunting regulations. AHM was developed cooperatively by the Service, the Flyway Councils, and the U.S. Geological Survey to bring more scientific rigor and objectivity to the regulations-setting process. The AHM process was designed as a way for all interests to work cooperatively to review all of the information available on duck populations and to develop as much consensus as possible on regulatory decisions. From a more formal perspective, AHM is based on the application of decision theory, which has been applied extensively in private industry to help managers make good decisions in the face of uncertainty. AHM exemplifies an emerging consensus among the scientific community that adaptive management is the best possible approach to natural resource management.

The critical elements of AHM are: (a) Agreed upon harvest management objectives; (b) a finite set of regulatory alternatives (*e.g.*, very restrictive, restrictive, moderate, and liberal); (c) statistical models of population dynamics; and (d) a resource monitoring program. The ''adaptive'' aspect refers to the evolution of harvest-management strategies over time based on a comparison of observed population responses with those predicted by the models of population dynamics. AHM consists of not one population model, but a collection of models that represent different, but plausible, views of how duck populations respond to harvest and other environmental factors. Those models that make the best predictions based on experience are favored and, thus, have more of an influence on harvest strategies than models that are poorer predictors.

The set of population models upon which harvest regulations for mid-continent and eastern mallards have been in place since 1995 and 2000, respectively. However, the basic structure of the models, alternative hypotheses of population dynamics, and evidence associated with each hypothesis (*i.e.*, model ''weights'') are subject to continuous review. This year, some important revisions have been made to these protocols. Most importantly, corrections have been made for the positive bias in birth and survival rates of mid-continent and eastern mallards (for more details about how these corrections were made, refer to the technical reports available on the AHM Web site at *http://migratorybirds.fws.gov/mgmt/ahm/ahm-intro.htm*).

Although there was some indication of bias in estimated birth and survival rates as early as the late 1970s, it was not a critical concern because predictive population models were not used to help set hunting regulations. With the advent of AHM and the use of models to help guide the setting of regulations, it has become necessary to correct population models for any source of bias. The bias-correction made this year results in a slightly more conservative regulatory strategy (*i.e.*, the regulations prescribed for a variety of population and pond levels) for mid-continent mallards. In other words, we can expect more years of conservative hunting regulations and fewer years of liberal regulations than if the bias were left uncorrected. However, correction for the bias would NOT have changed the liberal hunting regulations since 1995 because population and pond numbers were so high. The bias correction has had little effect on the outlook for regulations in the Atlantic Flyway, which are based on the status of eastern mallards. The source of the bias remains unknown, but monitoring programs used to estimate survival and birth rates are being carefully scrutinized.

Because of the Service's confidence in the AHM process, and based on public comment received concerning the proposed regulations in the August 16, 2002 **Federal Register**, the Service is adopting the liberal regulatory alternative (as described in the July 17, 2002 **Federal Register**) for the 2002–03 duck hunting season. The regulations for most ducks will be the same as those enacted during the 1997 through 2001 hunting seasons, except that the earliest opening and latest closing framework dates would be extended by about a week. The hunting season for pintails would be restricted from 107 days to 60 days in the Pacific Flyway, from 74 to 39 days in the Central Flyway, and from 60 to 30 days in the Mississippi and Atlantic Flyways. The hunting season on canvasbacks would be closed. Regulatory restrictions already in place

on the harvest of several other species of ducks, including black ducks and scaup, would be maintained (*see* section **D. Special Seasons/Species Management** below for details).

Although the number of ponds in the prairies and parklands of mid-continent North America declined dramatically this spring, the total population of breeding ducks remained near their long-term average. Also, the population size of the mallard, which is the most abundant species in the duck harvest, did not decline significantly from last year. Based on extensive biological assessments, as well as a consideration of recent changes in both population size and pond numbers, the Service has concluded that mallards can support harvest rates associated with the 2002 liberal regulatory alternative without long-term adverse impact (The harvest rate represents the percent of the population harvested. For example, the harvest rate on adult male mid-continent mallards during the 2001–02 liberal season was 11%.). Although the assessments are not as conclusive for other species as they are for mallards, we note that harvest rates of most species tend to be lower than those for mallards. We have restricted, however, hunting regulations for those species whose population status is of special concern.

With respect to the framework-date extensions, changes in harvest rate are difficult to predict reliably because we don't have experience with extended framework dates on a national basis. Based on a survey of Flyway Councils conducted in 1999, we estimate that 25 States will take advantage of the late closing date in at least a part of their State. Twelve States indicated they would take advantage of the early opening date. We will not know how many States actually use the extensions until States select their hunting regulations in September. Based on those States where we have had some experience (Mississippi and Iowa), our assessments suggest that the harvest of most ducks, particularly early- or late-migrating species, will increase. Thus, we estimate that offering framework-date extensions will increase the current average harvest rate (12 percent for adult males) to 14 percent for mid-continent mallards, and to 19 percent (from 18 percent for adult males) for eastern mallards. These potential increases were taken into consideration in proposing the hunting regulations for the 2002 season. We will monitor any changes in harvests carefully, and then use this experience to make any necessary adjustments in its predictions of future harvests.

Duck populations originating from the mid-continent nesting areas are expected to decline between now and next year due to the poor production that is anticipated. The magnitude of the decline is hard to predict, however, and will depend in part on harvest levels this season. Those species that most depend on nesting habitat in the prairies and parklands of the north-central U.S. and southern Canada would be expected to experience the greatest impacts due to poor production. However, it is important to remember that periodic drought is a characteristic feature of the Prairie Pothole Region, and while it leads to short-term declines in duck numbers, it is necessary for the long-term productivity of prairie wetlands. The high productivity of prairie wetlands is due in large part to these periodic droughts, which help maintain water quality and prevent fish (which compete with ducklings for food) from becoming too abundant. Moreover, conservation efforts to restore wetland basins and improve nesting cover are continuing to make significant progress, and will enhance the value of precipitation once it returns to normal levels.

Finally, it's important to note that the AHM process has focused so far on the mallard, which is among the most widespread and abundant duck species in North America. Also, much more is known about the population dynamics of mallards than any other species. However, not all duck species have the same potential to support harvest as the mallard (some species, like canvasbacks have lower harvest potential, while others, like blue-winged teal have higher potential). Therefore, a major challenge in setting a common duck hunting season is accounting for the differences among species in harvest potential. We have asked the AHM Working Group to make this issue its highest priority and the intent is to begin reviewing some alternative approaches with the Flyway Councils by early next year. In the short-term, however, we have enacted restrictions on those species that might not receive adequate protection under the current AHM process.

With regard to the Central Flyway's recommendation to limit the framework-date extension to the earliest opening date, we note that the specifics of the regulatory alternatives were finalized in the July 17, 2002 **Federal Register**. One of the primary goals of AHM has been to establish these alternatives early in the year, so that debate in the late-season process can be focused solely on selection of an alternative.

C. Zones and Split Seasons

*Written Comments:* An individual from Florida requested a split season for ducks.

*Service Response:* Under the zone/split season configuration selected by Florida in 2001, the season in Florida may be split into no more than three segments.

D. Special Seasons/Species Management

iii. Black Ducks

*Council Recommendations:* The Atlantic Flyway Council recommended allowing States to increase the daily bag limit on black ducks to 2 per day for up to 30 consecutive hunting days, provided the black duck season is closed for an equivalent number of days. During the remainder of the season, the black duck bag daily bag limit would be 1 bird per day. Both two-bird bag days and closed days could be split into no more than two segments.

*Service Response:* We remain concerned about the status of black duck populations and believe the International Harvest strategy should be completed before other regulatory alternatives are implemented. Further, we do not support allowing regulatory options because of the difficulty in assessing whether or not these options are in fact harvest-neutral. This proposal would allow States, or portions of States, several different combinations of bag limits from 2 to 1 bird daily, and include a period of season closure. We believe this option would add considerable complexity (zones within States, combinations of days and bags, etc.) and greater uncertainty during a time in which framework dates have been extended. The effects of framework-date extensions are expected to result in some additional harvest. We do not have the necessary harvest monitoring in place to assess all aspects of this proposal, including possible changes in the harvest distribution of black ducks within the Atlantic Flyway. We suggest that the Atlantic Flyway work within the guidelines being developed by the International Harvest Strategy Working Group.

iv. Canvasbacks

*Council Recommendations:* All four Flyway Councils recommended that the Canvasback Harvest Management Strategy be changed so that hunting seasons would be open if the population model predicts a subsequent-year breeding population of 400,000 or more. The objectives from the 1994 strategy would be modified as follows:

1. The goal for the size of the breeding population should be 540,000 birds,

consistent with the North American Waterfowl Management Plan,

2. The strategy should permit a greater possibility for a sustained sport harvest than has occurred recently using a closure threshold of 500,000, and

3. The amount of harvest in any one year should not result in a predicted spring population lower than 400,000, allowing harvest opportunity on this prairie nesting species at reasonable levels above and below long-term population levels.

4. Full-length canvasback seasons with 1-bird limits should be offered to all flyways when the breeding population is predicted to be above the closure threshold; however, the option of abbreviated canvasback seasons within basic duck seasons should be considered when harvest reduction is likely to sustain the breeding population above 400,000 birds.

With the above changes in mind, the Atlantic Flyway Council recommended a limited canvasback hunting season of 20 days in the Atlantic Flyway, the Mississippi Flyway Council recommended a limited canvasback hunting season of 20 days in the Mississippi Flyway, the Central Flyway Council recommended a limited canvasback hunting season of 25 days in the Central Flyway, and the Pacific Flyway Council recommended a limited canvasback hunting season of 38 days in the Pacific Flyway during the 2002–03 season, with a daily bag limit of one bird per day.

*Service Response:* For canvasbacks, we continue to support the harvest strategy adopted by the Service in 1994, and believe that it should be used to guide seasons this year. The 2002 spring breeding population estimate was 487,000, which was lower than the objective level of 500,000. The number of ponds in prairie Canada was 1.44 million, the lowest recorded in the history of the survey. Because predicted production is directly proportional to the abundance of ponds in Canada in May, we expect recruitment to be among the lowest ever experienced. Even with no harvest during the 2002–03 season, the canvasback model predicts the spring population will be below 500,000 in 2003. Thus, we believe that the season on canvasbacks should be closed.

In review of canvasback management, it is clear that this species has some unique biological attributes that have resulted in a long history of special harvest-management considerations necessary to maintain the population at the desired level. Canvasbacks have low recruitment potential and are very sensitive to drought conditions. Further, the current population objective of 500,000 has a long history. This level was first established in a 1976 Environmental Assessment. This objective was then used in the National Species of Special Emphasis document, the National Waterfowl Management Plan, and the most recent 1983 Environmental Assessment. We believe that the current goal of 500,000 has served us well in managing this population over the past three decades.

Last year, our objective was to allow some hunting opportunity while maintaining the 2002 spring population level above the 500,000 objective level. That objective was not achieved. With a breeding population already below 500,000, and with a very poor production outlook, we believe a season closure this year is warranted.

v. Pintails

*Council Recommendations:* The Atlantic Flyway Council recommended that the pintail season be limited to 20 days with a bag limit of one bird per day in the States of Georgia, Florida, North Carolina and South Carolina. States could select these days during any time period within their regular duck season.

The Upper-Region Regulations Committee of the Mississippi Flyway Council recommended a 45-day season, while the Lower-Region Regulations Committee recommended a 30-day season.

The Central Flyway Council recommended a 1-bird daily bag limit for pintails for the entire duck season.

The Pacific Flyway Council recommends the Service adopt the ''restrictive'' package season length (60 days) and allow States to split those seasons, consistent with existing zone and split regulations, for pintails in the Pacific Flyway in 2002–03.

*Written Comments:* An organization from Nevada questioned the survey data concerning the adult male/female ratio for pintails and the use of this information in establishing the seasonal frameworks. Further, they urged the Service to encourage hunters to direct harvest pressure toward drakes.

*Service Response:* We appreciate the time and careful attention by the Flyway Councils to the situation we currently face regarding appropriate pintail harvest regulations this year. The record low numbers, combined with the poor production forecast, have convinced us that a departure from the pintail harvest strategy is justified, as was evidenced by the majority of Council recommendations we received this year. Therefore, we will use the restrictive season length for pintails in all four Flyways. Further, we support the recommendation that the restrictive pintail season may be split according to applicable zone/split configurations approved for each State during the last open season.

In response to the comments concerning pintail population status and sex-ratio information, we concur with the expression of concern for the status of pintails, as evidenced by the reduction in pintail season length proposed in three Flyways for this year. We have had some previous experience in trying to determine sex ratios of waterfowl populations and have found it extremely difficult to obtain reliable population level estimates due to a variety of factors, such as differential migration and distribution. Therefore, although we would welcome such information, if reliable, we do not feel that attempting to develop such an information database would be a cost-effective use of limited resources. Although we are not opposed to hunters choosing to select male pintails for harvest under current regulations, we do not intend to actively promote such an approach based on past experience with both sex and species-specific harvest regulation. These past experiences have led us to conclude that such regulations are of limited value in targeting specific waterfowl population components and lead to expectations of far greater harvest control than can actually be achieved.

vi. Scaup

*Council Recommendations:* The Atlantic, Mississippi, and Central Flyway Councils recommended a daily bag limit of three scaup for the 2002–03 hunting season.

The Pacific Flyway Council recommended a daily bag limit of four scaup in the Pacific Flyway for the 2002–03 hunting season.

*Service Response:* In 1999, the Service restricted the bag limit of scaup to 3 in the Atlantic, Mississippi, and Central Flyways and 4 in the Pacific Flyway. During the past 3 seasons, harvest has been 210,700, 300,700, and 388,900, respectively. In addition, age ratios in the harvest over the last few years have suggested reduced productivity for scaup (the lowest on record in 2000). For the 2002–03 season, we will maintain these restrictions. We remain concerned about the status of this species, and will continue to support ongoing research efforts that are attempting to clarify those factors responsible for the decline in numbers and work with the technical committees of the Flyway Councils to improve our collective abilities to guide the harvest management of this species.

*3. Mergansers*

*Council Recommendations:* The Central Flyway Council recommends that the season on mergansers run concurrently with the duck season, with a daily bag/possession limit of 5, of which no more than 1 may be a hooded merganser. The possession limit will be twice the daily bag limit. Shooting hours for mergansers will be one-half hour before sunrise to sunset.

*Service Response:* We concur with the recommendation.

*4. Canada Geese*

B. Regular Seasons

*Council Recommendations:* The Atlantic Flyway Council had several recommendations concerning Canada goose populations in the Atlantic Flyway. For the North Atlantic Population (NAP), the Council recommended the establishment of high and low harvest areas within the existing NAP goose zone. They recommended that the NAP season frameworks be October 1 to January 31, with a 60-day season and a 2-bird daily bag limit in high harvest zones, and a 70-day, 3-bird daily bag limit in low harvest zones.

For Atlantic Population (AP) hunting regulations, the Council recommended liberalization of season frameworks in 2002–03 to include a 45-day season with a daily bag limit of 2 geese in the New England and Mid-Atlantic regions, with a framework opening date of the last Saturday in October and a closing date of January 31. In the Chesapeake region, the season length would be 45 days with a daily bag limit of 1 goose and a framework opening date of November 15 and a closing date of January 31. Remaining AP harvest areas (Northeast Hunt Unit in North Carolina and Back Bay, Virginia) would remain closed.

The Atlantic Flyway Council also recommended allowing regular seasons designed to maximize harvest of Resident Population (RP) Canada geese in designated areas of the Atlantic Flyway beginning in 2002. Regular seasons in designated RP harvest areas of Maryland, Pennsylvania, New York, Connecticut, North Carolina, and Virginia, should be 70 days with a 5-bird daily bag limit. In Maryland, Pennsylvania, and Virginia, the framework opening and closing dates would be November 15 to February 15. In New York and Connecticut, the framework dates would be the last Saturday in October to February 15. In North Carolina, the framework dates would be October 1 to February 15. The season would be subject to annual evaluation of band-recovery and harvest data.

The Upper- and Lower-Region Regulations Committees of the Mississippi Flyway Council recommended that the opening date for regular goose seasons in all States, except Michigan and Wisconsin, be as early as the Saturday nearest September 24 (September 21, 2002) if the duck hunting season framework dates are extended to the Saturday nearest September 24 (September 21, 2002). The Committees also recommended a number of changes in season lengths, bag limits, zones, and quotas for Canada geese. All of these changes are based on improved population status and current management plans.

The Central Flyway Council recommended that the regular seasons for all species of geese in all Central Flyway States be as early as the Saturday nearest September 24 (September 21, 2002) if the duck hunting season framework dates are extended to that date.

The Pacific Flyway Council recommended extension of the late goose season framework closing date for the Pacific Flyway to the last Sunday in January. In Arizona, Colorado, Idaho, Montana, Nevada, New Mexico, Utah, and Wyoming, the Council also recommended extension of the late goose season framework opening date to the Saturday nearest September 24, and an increase of the season-length to 107 days. In addition, the Council proposed several minor area and/or season length changes. The specific changes are summarized as follows:

1. For all States, extend the regular goose season framework ending date to the last Sunday in January;

2. For Arizona, Colorado, Idaho, Montana, Nevada, New Mexico, Utah, and Wyoming, extend the regular goose season framework opening date to the Saturday nearest September 24, and increase the length of goose seasons to 107 days;

3. In California's Northeastern Zone, increase the white-fronted and cackling Canada goose season length from 44 days to 100 days;

4. In California's Southern California Zone, establish the Imperial County Special Management Area and extend the white goose season ending date to the first Sunday in February;

5. In California's Balance-of-State Zone, increase the goose season length from 79 to 86 days;

6. In California's Balance-of-State Zone, allow a 9-day Canada goose season in Del Norte and Humboldt Counties; and

7. In western Oregon, modify closed zones in Lincoln and Coos Counties to allow general fall goose hunting, and modify the zone description for the Northwest Permit Goose Zone.

*Service Response:* We concur with the above recommendations.

C. Special Late Seasons

*Council Recommendations:* The Upper- and Lower-Region Regulations Committees of the Mississippi Flyway Council recommended that Minnesota be allowed to continue their special December experimental Canada goose season in 2002 to gather additional information. The Committees also recommended that Ohio's special late Canada goose season be granted operational status in 8 counties beginning the first Saturday after January 10th, for a maximum of 22 days, with a daily bag of 2 Canada geese.

*Written Comments:* An individual requested a special late goose season in northwest Indiana.

*Service Response:* We concur with the Committee's recommendations.

Regarding the request for a special late season in northwest Indiana, we note that, in most instances, pending Flyway Council approval, special late seasons are available as experimental seasons.

*6. Brant*

*Council Recommendations:* The Atlantic Flyway Council recommended that the 2002–03 season for Atlantic brant be 60 days in length with a 3-bird daily bag limit and with a framework opening date of the Saturday closest to September 24, and a closing date of January 31.

*Service Response:* We concur with the recommended change.

*8. Swans*

*Council Recommendations:* The Atlantic Flyway Council recommended the Service propose a season, or some other measure, to allow hunters participating in tundra swan seasons to substitute mute swan for tundra swan in the seasonal bag limit.

For the 2002–03 season, the Pacific Flyway Council accepted the swan frameworks outlined in the Service's Environmental Assessment (dated June 15, 2001) entitled ''Proposal to establish operational/experimental general swan hunting seasons in the Pacific Flyway.''

*Service Response:* Given the action of the Court of Appeals for the District of Columbia Circuit in December 2001, the provisions of the Migratory Bird Treaty Act now apply to mute swans. Management of this species could involve a number of options, including

hunting (others include issuance of depredation permits, establishment of a depredation order, etc.). Consideration of hunting, however, will require the development of proper NEPA documentation, including the development of an Environmental Assessment, and Section 7 (endangered species) consultations. This is comparable with those steps we follow for all other hunted species. We recognize the efforts of the Atlantic Flyway to prepare a Flyway management plan for mute swans and encourage the development of other Flyway plans that would help the Service and the Councils to establish effective hunting season frameworks.

*10. Coots*

*Council Recommendations:* The Central Flyway Council recommends that the season on coots run concurrently with the duck season, with daily bag/possession limits of 15 and 30, respectively. Shooting hours for coots will be one-half hour before sunrise to sunset.

The Pacific Flyway Council recommended outside dates, season length, and zones be the same as duck season frameworks.

*Service Response:* We concur with the recommendations.

**NEPA Consideration**

NEPA considerations are covered by the programmatic document, ''Final Supplemental Environmental Impact Statement: Issuance of Annual Regulations Permitting the Sport Hunting of Migratory Birds (FSES 88–14),'' filed with the Environmental Protection Agency on June 9, 1988. We published a Notice of Availability in the **Federal Register** on June 16, 1988 (53 FR 22582). We published our Record of Decision on August 18, 1988 (53 FR 31341). However, this programmatic document does not prescribe year-specific regulations; those are developed annually. The annual regulations and options were considered in the Environmental Assessment, ''Waterfowl Hunting Regulations for 2002–03.'' Copies are available from the address indicated under the caption **ADDRESSES.** Additionally, issues pertaining to swan hunting in the Pacific Flyway were covered under a separate NEPA document, ''Swan Hunting in the Pacific Flyway,'' issued June 14, 2001, with a Finding of No Significant Impact issued June 14, 2001. Copies are available from the address indicated under the caption **ADDRESSES.**

**Endangered Species Act Consideration**

Section 7 of the Endangered Species Act, as amended (16 U.S.C. 1531–1543; 87 Stat. 884), provides that, ''The Secretary shall review other programs administered by him and utilize such programs in furtherance of the purposes of this Act'' (and) shall ''insure that any action authorized, funded or carried out * * * is not likely to jeopardize the continued existence of any endangered species or threatened species or result in the destruction or adverse modification of [critical] habitat * * *'' Consequently, we conducted formal consultations to ensure that actions resulting from these regulations would not likely jeopardize the continued existence of endangered or threatened species or result in the destruction or adverse modification of their critical habitat. Findings from these consultations are included in a biological opinion and concluded that the regulations are not likely to adversely affect any endangered or threatened species. Additionally, these findings may have caused modification of some regulatory measures previously proposed and the final frameworks reflect any such modifications. Our biological opinions resulting from this Section 7 consultation are public documents available for public inspection at the address indicated under the caption **ADDRESSES.**

**Executive Order 12866**

This rule was reviewed by the Office of Management and Budget (OMB). The migratory bird hunting regulations are economically significant and are annually reviewed by OMB under Executive Order 12866. As such, a cost/benefit analysis was prepared in 1998 and is further discussed below under the heading Regulatory Flexibility Act. Copies of the cost/benefit analysis are available upon request from the address indicated under the caption **ADDRESSES.**

**Regulatory Flexibility Act**

These regulations have a significant economic impact on substantial numbers of small entities under the Regulatory Flexibility Act (5 U.S.C. 601 *et seq.*). We analyzed the economic impacts of the annual hunting regulations on small business entities in detail and issued a Small Entity Flexibility Analysis (Analysis) in 1998. The Analysis documented the significant beneficial economic effect on a substantial number of small entities. The primary source of information about hunter expenditures for migratory game bird hunting is the National Hunting and Fishing Survey, which is conducted at 5-year intervals. The Analysis was based on the 1996 National Hunting and Fishing Survey and the U.S. Department of Commerce's County Business Patterns, from which it was estimated that migratory bird hunters would spend between $429 million and $1.084 billion at small businesses. The Analysis is available upon request from the address indicated under the caption **ADDRESSES.**

**Small Business Regulatory Enforcement Fairness Act**

This rule is a major rule under 5 U.S.C. 804(2), the Small Business Regulatory Enforcement Fairness Act. For the reasons outlined above, this rule has an annual effect on the economy of $100 million or more. However, because this rule establishes hunting seasons, we plan to make the rule effective immediately under the exemption contained in 5 U.S.C. 808(1).

**Paperwork Reduction Act**

We examined these regulations under the Paperwork Reduction Act of 1995. The various recordkeeping and reporting requirements imposed under regulations established in 50 CFR part 20, Subpart K, are utilized in the formulation of migratory game bird hunting regulations. Specifically, OMB has approved the information collection requirements of the Migratory Bird Harvest Information Program and assigned control number 1018–0015 (expires 10/31/2004). This information is used to provide a sampling frame for voluntary national surveys to improve our harvest estimates for all migratory game birds in order to better manage these populations. A Federal agency may not conduct or sponsor, and a person is not required to respond to, a collection of information unless it displays a currently valid OMB control number.

**Unfunded Mandates Reform Act**

We have determined and certify, in compliance with the requirements of the Unfunded Mandates Reform Act, 2 U.S.C. 1502 *et seq.*, that this rulemaking will not ''significantly or uniquely'' affect small governments, and will not produce a Federal mandate of $100 million or more in any given year on local or State government or private entities. Therefore, this rule is not a ''significant regulatory action'' under the Unfunded Mandates Reform Act.

**Civil Justice Reform—Executive Order 12988**

The Department, in promulgating this rule, has determined that this rule will not unduly burden the judicial system

and meets the requirements of sections 3(a) and 3(b)(2) of Executive Order 12988.

**Energy Effects—Executive Order 13211**

On May 18, 2001, the President issued an Executive Order 13211 on regulations that significantly affect energy supply, distribution, and use. Executive Order 13211 requires agencies to prepare Statements of Energy Effects when undertaking certain actions. While this supplemental proposed rule is a significant regulatory action under Executive Order 12866, it is not expected to adversely affect energy supplies, distribution, or use. Therefore, this proposed action is not a significant energy action and no Statement of Energy Effects is required.

**Takings Implication Assessment**

In accordance with Executive Order 12630, this rule, authorized by the Migratory Bird Treaty Act, does not have significant takings implications and does not affect any constitutionally protected property rights. This rule will not result in the physical occupancy of property, the physical invasion of property, or the regulatory taking of any property. In fact, this rule will allow hunters to exercise otherwise unavailable privileges, and, therefore, reduces restrictions on the use of private and public property.

**Federalism Effects**

Due to the migratory nature of certain species of birds, the Federal Government has been given responsibility over these species by the Migratory Bird Treaty Act. We annually prescribe frameworks from which the States make selections and employ guidelines to establish special regulations on Federal Indian reservations and ceded lands. This process preserves the ability of the States and Tribes to determine which seasons meet their individual needs. Any State or Tribe may be more restrictive than the Federal frameworks at any time. The frameworks are developed in a cooperative process with the States and the Flyway Councils. This process allows States to participate in the development of frameworks from which they will make selections, thereby having an influence on their own regulations.

These rules do not have a substantial direct effect on fiscal capacity, change the roles or responsibilities of Federal or State governments, or intrude on State policy or administration. Therefore, in accordance with Executive Order 13132, these regulations do not have significant federalism effects and do not have sufficient federalism implications to warrant the preparation of a Federalism Assessment.

**Regulations Promulgation**

The rulemaking process for migratory game bird hunting must, by its nature, operate under severe time constraints. However, we intend that the public be given the greatest possible opportunity to comment. Thus, when the preliminary proposed rulemaking was published, we established what we believed were the longest periods possible for public comment. In doing this, we recognized that when the comment period closed, time would be of the essence. That is, if there were a delay in the effective date of these regulations after this final rulemaking, States would have insufficient time to select season dates and limits; to communicate those selections to us; and to establish and publicize the necessary regulations and procedures to implement their decisions. We, therefore, find that ''good cause'' exists, within the terms of 5 U.S.C. 553(d)(3) of the Administrative Procedure Act, and these frameworks will take effect immediately upon publication.

Therefore, under authority of the Migratory Bird Treaty Act (July 3, 1918), as amended, (16 U.S.C. 703–711), we prescribe final frameworks setting forth the species to be hunted, the daily bag and possession limits, the shooting hours, the season lengths, the earliest opening and latest closing season dates, and hunting areas, from which State conservation agency officials will select hunting season dates and other options. Upon receipt of season and option selections from these officials, we will publish in the **Federal Register** a final rulemaking amending 50 CFR part 20 to reflect seasons, limits, and shooting hours for the conterminous United States for the 2002–03 season.

**List of Subjects in 50 CFR Part 20**

Exports, Hunting, Imports, Reporting and recordkeeping requirements, Transportation, Wildlife.

The rules that eventually will be promulgated for the 2002–03 hunting season are authorized under 16 U.S.C. 703–712 and 16 U.S.C. 742 a–j, Pub. L. 106–108.

Dated: September 9, 2002.

**Craig Manson,**

*Assistant Secretary for Fish and Wildlife and Parks.*

**Final Regulations Frameworks for 2002–03 Late Hunting Seasons on Certain Migratory Game Birds**

Pursuant to the Migratory Bird Treaty Act and delegated authorities, the Department has approved the following frameworks for season lengths, shooting hours, bag and possession limits, and outside dates within which States may select seasons for hunting waterfowl and coots between the dates of September 1, 2002, and March 10, 2003.

**General**

*Dates:* All outside dates noted below are inclusive.

*Shooting and Hawking (taking by falconry) Hours:* Unless otherwise specified, from one-half hour before sunrise to sunset daily.

*Possession Limits:* Unless otherwise specified, possession limits are twice the daily bag limit.

**Flyways and Management Units**

*Waterfowl Flyways*

Atlantic Flyway—includes Connecticut, Delaware, Florida, Georgia, Maine, Maryland, Massachusetts, New Hampshire, New Jersey, New York, North Carolina, Pennsylvania, Rhode Island, South Carolina, Vermont, Virginia, and West Virginia.

Mississippi Flyway—includes Alabama, Arkansas, Illinois, Indiana, Iowa, Kentucky, Louisiana, Michigan, Minnesota, Mississippi, Missouri, Ohio, Tennessee, and Wisconsin.

Central Flyway—includes Colorado (east of the Continental Divide), Kansas, Montana (Counties of Blaine, Carbon, Fergus, Judith Basin, Stillwater, Sweetgrass, Wheatland, and all counties east thereof), Nebraska, New Mexico (east of the Continental Divide except the Jicarilla Apache Indian Reservation), North Dakota, Oklahoma, South Dakota, Texas, and Wyoming (east of the Continental Divide).

Pacific Flyway—includes Alaska, Arizona, California, Idaho, Nevada, Oregon, Utah, Washington, and those portions of Colorado, Montana, New Mexico, and Wyoming not included in the Central Flyway.

*Management Units*

High Plains Mallard Management Unit—roughly defined as that portion of the Central Flyway which lies west of the 100th meridian.

*Definitions:* For the purpose of hunting regulations listed below, the

collective terms ''dark'' and ''light'' geese include the following species:

Dark geese—Canada geese, white-fronted geese, brant, and all other goose species except light geese.

Light geese—snow (including blue) geese and Ross' geese.

*Area, Zone, and Unit Descriptions:* Geographic descriptions related to late-season regulations are contained in a later portion of this document.

*Area-Specific Provisions:* Frameworks for open seasons, season lengths, bag and possession limits, and other special provisions are listed below by Flyway.

*Compensatory Days in the Atlantic Flyway:* In the Atlantic Flyway States of Connecticut, Delaware, Maine, Maryland, Massachusetts, New Jersey, North Carolina, Pennsylvania, and Virginia, where Sunday hunting is prohibited statewide by State law, all Sundays are closed to all take of migratory waterfowl (including mergansers and coots).

*Atlantic Flyway*

Ducks, Mergansers, and Coots

*Outside Dates:* Between the Saturday nearest September 24 (September 21) and the last Sunday in January (January 26).

*Hunting Seasons and Duck Limits:* 60 days, except pintails which may not exceed 30 days, and daily bag limit of 6 ducks, including no more than 4 mallards (2 hens), 3 scaup, 1 black duck, 1 pintail, 1 mottled duck, 1 fulvous whistling duck, 2 wood ducks, 2 redheads, and 4 scoters.

*Closures:* The season on canvasbacks and harlequin ducks is closed.

*Sea Ducks:* Within the special sea duck areas, during the regular duck season in the Atlantic Flyway, States may choose to allow the above sea duck limits in addition to the limits applying to other ducks during the regular duck season. In all other areas, sea ducks may be taken only during the regular open season for ducks and are part of the regular duck season daily bag (not to exceed 4 scoters) and possession limits.

*Merganser Limits:* The daily bag limit of mergansers is 5, only 1 of which may be a hooded merganser.

*Coot Limits:* The daily bag limit is 15 coots.

*Lake Champlain Zone, New York:* The waterfowl seasons, limits, and shooting hours shall be the same as those selected for the Lake Champlain Zone of Vermont.

*Connecticut River Zone, Vermont:* The waterfowl seasons, limits, and shooting hours shall be the same as those selected for the Inland Zone of New Hampshire.

*Zoning and Split Seasons:* Delaware, Florida, Georgia, Maryland, North Carolina, Rhode Island, South Carolina, and Virginia may split their seasons into three segments; Connecticut, Maine, Massachusetts, New Hampshire, New Jersey, New York, Pennsylvania, Vermont, and West Virginia may select hunting seasons by zones and may split their seasons into two segments each zone.

Canada Geese

*Season Lengths, Outside Dates, and Limits:* Specific regulations for Canada geese are shown below by State. Unless specified otherwise, seasons may be split into two segments. In areas within States where the framework closing date for Atlantic Population (AP) goose seasons overlaps with special late season frameworks for resident geese, the framework closing date for AP goose seasons is January 14.

*Connecticut:* North Atlantic Population (NAP) Zone: Between October 1 and January 31, a 60-day season may be held with a 2-bird daily bag limit in the H Unit and a 70-day season with a 3-bird daily bag in the L Unit.

*Atlantic Population (AP) Zone:* A 45-day season may be held between the last Saturday in October (October 26) and January 31 with a 2-bird daily bag limit.

*South Zone:* A special experimental season may be held between January 15 and February 15, with a 5-bird daily bag limit.

*Delaware:* A 45-day season may be held between November 15 and January 31 with a 1-bird daily bag limit.

*Florida:* A 70-day season may be held between November 15 and February 15, with a 5-bird daily bag limit.

*Georgia:* In specific areas, a 70-day season may be held between November 15 and February 15, with a 5-bird daily bag limit.

*Maine:* A 60-day season may be held Statewide between October 1 and January 31 with a 2-bird daily bag limit.

*Maryland:* Resident Population (RP) Zone: A 70-day season may be held between November 15 and February 15, with a 5-bird daily bag limit.

*AP Zone:* A 45-day season may be held between November 15 and January 31 with a 1-bird daily bag limit.

*Massachusetts: NAP Zone:* A 60-day season may be held between October 1 and January 31 with a 2-bird daily bag limit. Additionally, a special season may be held from January 15 to February 15, with a 5-bird daily bag limit.

*AP Zone:* A 45-day season may be held between the last Saturday in October (October 26) and January 31 with a 2-bird daily bag limit.

*New Hampshire:* A 60-day season may be held statewide between October 1 and January 31 with a 2-bird daily bag limit.

*New Jersey: Statewide:* A 45-day season may be held between the last Saturday in October (October 26) and January 31 with a 2-bird daily bag limit.

*Special Late Goose Season Area:* An experimental season may be held in designated areas of North and South New Jersey from January 15 to February 15, with a 5-bird daily bag limit.

*New York:* Southern James Bay Population (SJBP) Zone: A 70-day season may be held between the last Saturday in October (October 26) and January 31, with a 2-bird daily bag limit.

*NAP Zone:* Between October 1 and January 31, a 60-day season may be held with a 2-bird daily bag limit in the High Harvest areas and a 70-day season with a 3-bird daily bag limit in the Low Harvest areas.

*Special Late Goose Season Area:* An experimental season may be held between January 15 and February 15, with a 5-bird daily bag limit in designated areas of Chemung, Delaware, Tioga, Broome, Sullivan, Westchester, Nassau, Suffolk, Orange, Dutchess, Putnam, and Rockland Counties.

*AP Zone:* A 45-day season may be held between the last Saturday in October (October 26) and January 31 with a 2-bird daily bag limit.

*RP Zone:* A 70-day season may be held between the last Saturday in October (October 26) and February 15 with a 5-bird daily bag limit.

*North Carolina: SJBP Zone:* A 70-day season may be held between October 1 and December 31, with a 2-bird daily bag limit, except for the Northeast Hunt Unit and Northampton County, which is closed.

*RP Zone:* A 70-day season may be held between October 1 and February 15 with a 5-bird daily bag limit.

*Pennsylvania: SJBP Zone:* A 40-day season may be held between November 15 and January 14, with a 2-bird daily bag limit.

*Pymatuning Zone:* A 35-day season may be held between October 1 and January 31, with a 1-bird daily bag limit.

*RP Zone:* A 70-day season may be held between November 15 and February 15, with a 5-bird daily bag limit.

*AP Zone:* A 45-day season may be held between the last Saturday in October (October 26) and January 31 with a 2-bird daily bag limit.

*Special Late Goose Season Area:* An experimental season may be held from

January 15 to February 15 with a 5-bird daily bag limit.

*Rhode Island:* A 60-day season may be held between October 1 and January 31, with a 2-bird daily bag limit. An experimental season may be held in designated areas from January 15 to February 15, with a 5-bird daily bag limit.

*South Carolina:* In designated areas, a 70-day season may be held during November 15 to February 15, with a 5-bird daily bag limit.

*Vermont:* A 45-day season may be held between the last Saturday in October (October 26) and January 31 with a 2-bird daily bag limit.

*Virginia: SJBP Zone:* A 40-day season may be held between November 15 and January 14, with a 2-bird daily bag limit. Additionally, an experimental season may be held between January 15 and February 15, with a 5-bird daily bag limit.

*AP Zone:* A 45-day season may be held between November 15 and January 31 with a 1-bird daily bag limit.

*RP Zone:* A 70-day season may be held between November 15 and February 15 with a 5-bird daily bag limit.

*Back Bay Area:* Season is closed.

*West Virginia:* A 70-day season may be held between October 1 and January 31, with a 3-bird daily bag limit.

Light Geese

*Season Lengths, Outside Dates, and Limits:* States may select a 107-day season between October 1 and March 10, with a 15-bird daily bag limit and no possession limit. States may split their seasons into three segments, except in Delaware and Maryland, where, following the completion of their duck season, and until March 10, Delaware and Maryland may split the remaining portion of the season to hunt on Mondays, Wednesdays, Fridays, and Saturdays only.

Brant

*Season Lengths, Outside Dates, and Limits:* States may select a 60-day season between the Saturday nearest September 24 (September 21) and January 31, with a 3-bird daily bag limit. States may split their seasons into two segments.

*Mississippi Flyway*

Ducks, Mergansers, and Coots

*Outside Dates:* Between the Saturday nearest September 24 (September 21) and the last Sunday in January 20 (January 26).

*Hunting Seasons and Duck Limits:* 60 days, except that the season for pintails may not exceed 30 days and the season for canvasbacks is closed. The daily bag limit is 6 ducks, including no more than 4 mallards (no more than 2 of which may be females), 3 mottled ducks, 3 scaup, 1 black duck, 1 pintail, 2 wood ducks, and 2 redheads.

*Merganser Limits:* The daily bag limit is 5, only 1 of which may be a hooded merganser. In States that include mergansers in the duck bag limit, the daily limit is the same as the duck bag limit, only one of which may be a hooded merganser.

*Coot Limits:* The daily bag limit is 15 coots.

*Zoning and Split Seasons:* Alabama, Illinois, Indiana, Iowa, Kentucky, Louisiana, Michigan, Missouri, Ohio, Tennessee, and Wisconsin may select hunting seasons by zones.

In Alabama, Indiana, Iowa, Kentucky, Louisiana, Michigan, Ohio, Tennessee, and Wisconsin, the season may be split into two segments in each zone.

In Arkansas, Minnesota, and Mississippi, the season may be split into three segments.

Geese

*Split Seasons:* Seasons for geese may be split into three segments. Three-way split seasons for Canada geese require Mississippi Flyway Council and U.S. Fish and Wildlife Service approval and a 3-year evaluation by each participating State.

*Season Lengths, Outside Dates, and Limits:* States may select seasons for light geese not to exceed 107 days with 20 geese daily between the Saturday nearest September 24 (September 21) and March 10; for white-fronted geese not to exceed 86 days with 2 geese daily or 107 days with 1 goose daily between the Saturday nearest September 24 (September 21) and the Sunday nearest February 15 (February 16); and for brant not to exceed 70 days with 2 brant daily or 107 days with 1 brant daily between the Saturday nearest September 24 (September 21) and January 31. There is no possession limit for light geese. Specific regulations for Canada geese and exceptions to the above general provisions are shown below by State. Except as noted below, the outside dates for Canada geese are the Saturday nearest September 24 (September 21) and January 31.

*Alabama:* In the SJBP Goose Zone, the season for Canada geese may not exceed 50 days. Elsewhere, the season for Canada geese may extend for 70 days in the respective duck-hunting zones. The daily bag limit is 2 Canada geese.

*Arkansas:* In the Northwest Zone, the season for Canada geese may extend for 33 days, provided that one segment of at least nine days occurs prior to October 15. In the remainder of the State, the season may not exceed 23 days. The season may extend to February 15, and may be split into two segments. The daily bag limit is 2 Canada geese.

*Illinois:* The total harvest of Canada geese in the State will be limited to 64,100 birds. The daily bag limit is 2 Canada geese. The possession limit is 10 Canada geese.

(a) North Zone—The season for Canada geese will close after 80 days or when 9,300 birds have been harvested in the Northern Illinois Quota Zone, whichever occurs first.

(a) Central Zone—The season for Canada geese will close after 80 days or when 12,800 birds have been harvested in the Central Illinois Quota Zone, whichever occurs first.

(c) South Zone—The season for Canada geese will close after 80 days or when 16,100 birds have been harvested in the Southern Illinois Quota Zone, whichever occurs first.

*Indiana:* The season for Canada geese may extend for 60 days, except in the SJBP Zone, where the season may not exceed 50 days. The daily bag limit is 2 Canada geese.

*Iowa:* The season may extend for 70 days. The daily bag limit is 2 Canada geese.

*Kentucky:* (a) Western Zone—The season for Canada geese may extend for 56 days (71 days in Fulton County), and the harvest will be limited to 10,300 birds. Of the 10,300-bird quota, 6,700 birds will be allocated to the Ballard Reporting Area and 2,575 birds will be allocated to the Henderson/Union Reporting Area. If the quota in either reporting area is reached prior to completion of the 56-day season, the season in that reporting area will be closed. If the quotas in both the Ballard and Henderson/Union reporting areas are reached prior to completion of the 56-day season, the season in the counties and portions of counties that comprise the Western Goose Zone (listed in State regulations) may continue for an additional 7 days, not to exceed a total of 56 days (71 days in Fulton County). The season in Fulton County may extend to February 15. The daily bag limit is 2 Canada geese.

(b) Pennyroyal/Coalfield Zone—The season may extend for 50 days. The daily bag limit is 2 Canada geese.

(c) Remainder of the State—The season may extend for 50 days. The daily bag limit is 2 Canada geese.

*Louisiana:* The season for Canada geese may extend for 9 days. During the season, the daily bag limit is 1 Canada goose and 2 white-fronted geese with an

86-day white-fronted goose season or 1 white-fronted goose with a 107-day season. Hunters participating in the Canada goose season must possess a special permit issued by the State.

*Michigan:* (a) Mississippi Valley Population (MVP) Zone—The total harvest of Canada geese will be limited to 46,400 birds. The framework opening date for all geese is September 16 and the season for Canada geese may extend for 21 days. The daily bag limit is 2 Canada geese.

(1) Allegan County GMU—The Canada goose season will close after 25 days or when 1,400 birds have been harvested, whichever occurs first. The daily bag limit is 1 Canada goose.

(2) Muskegon Wastewater GMU—The Canada goose season will close after 25 days or when 450 birds have been harvested, whichever occurs first. The daily bag limit is 2 Canada geese.

(b) SJBP Zone—The framework opening date for all geese is September 16 and the season for Canada geese may extend for 30 days. The daily bag limit is 2 Canada geese.

(1) Saginaw County GMU—The Canada goose season will close after 50 days or when 2,000 birds have been harvested, whichever occurs first. The daily bag limit is 1 Canada goose.

(2) Tuscola/Huron GMU—The Canada goose season will close after 50 days or when 750 birds have been harvested, whichever occurs first. The daily bag limit is 1 Canada goose.

(c) Southern Michigan GMU—A special Canada goose season may be held between January 4 and February 2. The daily bag limit is 5 Canada geese.

(d) Central Michigan GMU—A special Canada goose season may be held between January 4 and February 2. The daily bag limit is 5 Canada geese.

*Minnesota:* (a) West Zone.

(1) West Central Zone—The season for Canada geese may extend for 40 days. In the Lac Qui Parle Zone, the season will close after 40 days or when 12,000 birds have been harvested, whichever occurs first. Throughout the West Central Zone, the daily bag limit is 1 Canada goose.

(2) Remainder of West Zone—The season for Canada geese may extend for 40 days. The daily bag limit is 1 Canada goose.

(b) Northwest Zone—The season for Canada geese may extend for 40 days. The daily bag limit is 1 Canada goose.

(c) Remainder of the State—The season for Canada geese may extend for 70 days. The daily bag limit is 2 Canada geese.

(d) Special Late Canada Goose Season—An experimental special Canada goose season of up to 10 days may be held in December, except in the West Central and Lac qui Parle Goose zones. During the special season, the daily bag limit is 5 Canada geese, except in the Southeast Goose Zone, where the daily bag limit is 2.

*Mississippi:* The season for Canada geese may extend for 70 days. The daily bag limit is 3 Canada geese.

*Missouri:* (a) Swan Lake Zone—The season for Canada geese may extend for 77 days, with no more than 30 days occurring after November 30. The season may be split into 3 segments. The daily bag limit is 2 Canada geese.

(b) Southeast Zone—The season for Canada geese may extend for 77 days. The season may be split into 3 segments, provided that at least 1 segment occurs prior to December 1. The daily bag limit is 3 Canada geese through October 31, and 2 Canada geese thereafter.

(c) Remainder of the State—

(1) North Zone—The season for Canada geese may extend for 77 days, with no more than 30 days occurring after November 30. The season may be split into 3 segments, provided that 1 segment of at least 9 days occurs prior to October 15. The daily bag limit is 3 Canada geese through October 31, and 2 Canada geese thereafter.

(2) Middle Zone—The season for Canada geese may extend for 77 days, with no more than 30 days occurring after November 30. The season may be split into 3 segments, provided that 1 segment of at least 9 days occurs prior to October 15. The daily bag limit is 3 Canada geese through October 31, and 2 Canada geese thereafter.

(3) South Zone—The season for Canada geese may extend for 77 days. The season may be split into 3 segments, provided that at least 1 segment occurs prior to December 1. The daily bag limit is 3 Canada geese through October 31, and 2 Canada geese thereafter.

*Ohio:* The season for Canada geese may extend for 70 days in the respective duck-hunting zones, with a daily bag limit of 2 Canada geese, except in the Lake Erie SJBP Zone, where the season may not exceed 35 days and the daily bag limit is 1 Canada goose. A special Canada goose season of up to 22 days, beginning the first Saturday after January 10, may be held in the following counties: Allen (north of U.S. Highway 30), Fulton, Geauga (north of Route 6), Henry, Huron, Lucas (Lake Erie Zone closed), Seneca, and Summit (Lake Erie Zone closed). During the special season, the daily bag limit is 2 Canada geese.

*Tennessee:* (a) Northwest Zone—The season for Canada geese may not exceed 71 days, and may extend to February 15. The daily bag limit is 2 Canada geese.

(b) Southwest Zone—The season for Canada geese may extend for 50 days. The daily bag limit is 2 Canada geese.

(c) Kentucky/Barkley Lakes Zone—The season for Canada geese may extend for 50 days. The daily bag limit is 2 Canada geese.

(d) Remainder of the State—The season for Canada geese may extend for 70 days. The daily bag limit is 2 Canada geese.

*Wisconsin:* The total harvest of Canada geese in the State will be limited to 48,500 birds.

(a) Horicon Zone—The framework opening date for all geese is September 16. The harvest of Canada geese is limited to 18,000 birds. The season may not exceed 94 days. All Canada geese harvested must be tagged. The daily bag limit is 2 Canada geese, and the season limit will be the number of tags issued to each permittee.

(b) Collins Zone—The framework opening date for all geese is September 16. The harvest of Canada geese is limited to 600 birds. The season may not exceed 68 days. All Canada geese harvested must be tagged. The daily bag limit is 2 Canada geese, and the season limit will be the number of tags issued to each permittee.

(c) Exterior Zone—The framework opening date for all geese is September 21. The harvest of Canada geese is limited to 25,400 birds, with 500 birds allocated to the Mississippi River Subzone. The season may not exceed 94 days, except in the Mississippi River Subzone, where the season may not exceed 71 days. The daily bag limit is 1 Canada goose. In that portion of the Exterior Zone outside the Mississippi River Subzone, the progress of the harvest must be monitored, and the season closed, if necessary, to ensure that the harvest does not exceed 25,400 birds.

*Additional Limits:* In addition to the harvest limits stated for the respective zones above, an additional 4,500 Canada geese may be taken in the Horicon Zone under special agricultural permits.

*Quota Zone Closures:* When it has been determined that the quota of Canada geese allotted to the Northern Illinois, Central Illinois, and Southern Illinois Quota Zones in Illinois; the Ballard and Henderson-Union Subzones in Kentucky; the Allegan County, Muskegon Wastewater, Saginaw County, and Tuscola/Huron Goose Management Units in Michigan; the Lac Qui Parle Zone in Minnesota; and the Exterior Zone in Wisconsin will have been filled, the season for taking Canada geese in the respective zone (and associated area, if applicable) will be closed by either the Director upon giving public notice

through local information media at least 48 hours in advance of the time and date of closing, or by the State through State regulations with such notice and time (not less than 48 hours) as they deem necessary.

*Central Flyway*

Ducks, Mergansers, and Coots

*Outside Dates:* Between the Saturday nearest September 24 (September 21) and the last Sunday in January (January 26).

*Hunting Seasons and Duck Limits:* (1) High Plains Mallard Management Unit (roughly defined as that portion of the Central Flyway which lies west of the 100th meridian): 97 days, except pintails which may not exceed 39 days, and a daily bag limit of 6 ducks, including no more than 5 mallards (no more than 2 of which may be hens), 1 mottled duck, 1 pintail, 2 redheads, 3 scaup, and 2 wood ducks. The last 23 days may start no earlier than the Saturday nearest December 10 (December 7). The season on canvasbacks is closed.

(2) *Remainder of the Central Flyway:* 74 days, except pintails which may not exceed 39 consecutive days, and a daily bag limit of 6 ducks, including no more than 5 mallards (no more than 2 of which may be hens), 1 mottled duck, 1 pintail, 2 redheads, 3 scaup, and 2 wood ducks. The season on canvasbacks is closed.

*Merganser Limits:* The daily bag limit is 5 mergansers, only 1 of which may be a hooded merganser. In States that include mergansers in the duck daily bag limit, the daily limit may be the same as the duck bag limit, only one of which may be a hooded merganser.

*Coot Limits:* The daily bag limit is 15 coots.

*Zoning and Split Seasons:* Kansas (Low Plains portion), Montana, Nebraska (Low Plains portion), New Mexico, Oklahoma (Low Plains portion), South Dakota (Low Plains portion), Texas (Low Plains portion), and Wyoming may select hunting seasons by zones.

In Kansas, Montana, Nebraska, New Mexico, North Dakota, Oklahoma, South Dakota, Texas, and Wyoming, the regular season may be split into two segments.

In Colorado, the season may be split into three segments.

Geese

*Split Seasons:* Seasons for geese may be split into three segments. Three-way split seasons for Canada geese require Central Flyway Council and U.S. Fish and Wildlife Service approval, and a 3-year evaluation by each participating State.

*Outside Dates:* For dark geese, seasons may be selected between the outside dates of the Saturday nearest September 24 (September 21) and the Sunday nearest February 15 (February 17). For light geese, outside dates for seasons may be selected between the Saturday nearest September 24 (September 21) and March 10. In the Rainwater Basin Light Goose Area (East and West) of Nebraska, temporal and spatial restrictions consistent with the experimental late-winter snow goose hunting strategy endorsed by the Central Flyway Council in July 1999, are required.

*Season Lengths and Limits:* Light Geese: States may select a light goose season not to exceed 107 days. The daily bag limit for light geese is 20 with no possession limit.

*Dark Geese:* In Kansas, Nebraska, North Dakota, Oklahoma, South Dakota, and the Eastern Goose Zone of Texas, States may select a season for Canada geese (or any other dark goose species except white-fronted geese) not to exceed 95 days with a daily bag limit of 3. Additionally, in the Eastern Goose Zone of Texas, an alternative season of 107 days with a daily bag limit of 1 Canada goose may be selected. For white-fronted geese, these States may select either a season of 86 days with a bag limit of 2 or a 107-day season with a bag limit of 1.

In South Dakota, for Canada geese in the Big Stone Power Plant Area of Canada Goose Unit 3, the daily bag limit is 3 until November 30 and 2 thereafter.

In Colorado, Montana, New Mexico and Wyoming, States may select seasons not to exceed 107 days. The daily bag limit for dark geese is 5 in the aggregate.

In the Western Goose Zone of Texas, the season may not exceed 107 days. The daily bag limit for Canada geese (or any other dark goose species except white-fronted geese) is 5. The daily bag limit for white-fronted geese is 1.

*Pacific Flyway*

Ducks, Mergansers, Coots, Common Moorhens, and Purple Gallinules

Hunting Seasons and Duck Limits: Concurrent 107 days and daily bag limit of 7 ducks and mergansers, including no more than 2 female mallards, 1 pintail, 4 scaup, 2 redheads. The season on pintails is closed, except one pintail may be included in the daily bag limit for 60 days within the Pacific Flyway duck season. A single pintail may also be included in the 7-bird daily bag limit for designated youth-hunt days. The season on canvasbacks is closed.

The season on coots and common moorhens may be between the outside dates for the season on ducks, but not to exceed 107 days.

*Coot, Common Moorhen, and Purple Gallinule Limits:* The daily bag and possession limits of coots, common moorhens, and purple gallinules are 25, singly or in the aggregate.

*Outside Dates:* Between the Saturday nearest September 24 (September 21) and the last Sunday in January (January 26).

*Zoning and Split Seasons:* Arizona, California, Idaho, Nevada, Oregon, Utah, and Washington may select hunting seasons by zones.

Arizona, California, Idaho, Nevada, Oregon, Utah, and Washington may split their seasons into two segments.

Colorado, Montana, New Mexico, and Wyoming may split their seasons into three segments.

*Colorado River Zone, California:* Seasons and limits shall be the same as seasons and limits selected in the adjacent portion of Arizona (South Zone).

Geese

Season Lengths, Outside Dates, and Limits:

*California, Oregon, and Washington:* Except as subsequently noted, 100-day seasons may be selected, with outside dates between the Saturday nearest October 1 (September 28), and the last Sunday in January (January 26). Basic daily bag limits are 3 light geese and 4 dark geese, except in California, Oregon, and Washington, where the dark goose bag limit does not include brant.

*Arizona, Colorado, Idaho, Montana, Nevada, New Mexico, Utah, and Wyoming:* Except as subsequently noted, 107-day seasons may be selected, with outside dates between the Saturday nearest September 24 (September 21), and the last Sunday in January (January 26) Basic daily bag limits are 3 light geese and 4 dark geese.

*Split Seasons:* Unless otherwise specified, seasons for geese may be split into up to 3 segments.

Three-way split seasons for Canada geese and white-fronted geese require Pacific Flyway Council and U.S. Fish and Wildlife Service approval and a 3-year evaluation by each participating State.

Brant Season—A 16-consecutive-day season may be selected in Oregon. A 16-day season may be selected in Washington, and this season may be split into 2 segments. A 30-consecutive-day season may be selected in California. In these States, the daily bag limit is 2 brant and is in addition to dark goose limits.

*Arizona:* The daily bag limit for dark geese is 3.

*California:* Northeastern—The daily bag limit is 3 geese and may include no more than 2 dark geese; including not more than 1 cackling Canada goose or 1 Aleutian Canada goose.

Southern California Zone—In the Imperial County Special Management Area, light geese only may be taken from the end of the general goose hunting season through the first Sunday in February (February 2).

Balance-of-the-State Zone—An 86-day season may be selected. Limits may not include more than 3 geese per day, of which not more than 2 may be white-fronted geese and not more than 1 may be a cackling Canada goose or Aleutian Canada goose. Three areas in the Balance-of-the-State Zone are restricted in the hunting of certain geese:

(1) In the Counties of Del Norte and Humboldt, the open season for Canada geese may be 9 days. The daily bag limit shall contain no more than 1 Canada goose, cackling Canada goose or Aleutian Canada goose.

(2) In the Sacramento Valley Special Management Area (West), the season on white-fronted geese must end on or before December 14, and, in the Sacramento Valley Special Management Area (East), there will be no open season for Canada geese.

(3) In the San Joaquin Valley Special Management Area, there will be no open season for Canada geese.

*Oregon:* Except as subsequently noted, the dark goose daily bag limit is 4, including not more than 1 cackling Canada goose or Aleutian Canada goose.

Harney, Klamath, Lake, and Malheur County Zone—For Lake County only, the daily dark goose bag limit may not include more than 2 white-fronted geese.

Western Zone—Special Canada Goose Management Area, except for designated areas, there will be no open season on Canada geese. In the designated areas, individual quotas will be established that collectively will not exceed 165 dusky Canada geese. See section on quota zones. In those designated areas, the daily bag limit of dark geese is 4 and may include no more than 1 Aleutian Canada goose.

*Closed Zone:* Those portions of Coos and Curry Counties south of Bandon and west of U.S. 101 and all of Tillamook County.

*Washington:* The daily bag limit is 4 geese, including 4 dark geese but not more than 3 light geese.

Southwest Quota Zone—In the Special Goose Management Area, except for designated areas, there will be no open season on Canada geese. In the designated areas, individual quotas will be established that collectively will not exceed 85 dusky Canada geese. See section on quota zones. In this area, the daily bag limit of dark geese is 4 and may include 4 cackling Canada geese. In Southwest Quota Zone Area 2B (Pacific and Grays Harbor Counties) the dark goose bag limit may include 1 Aleutian Canada goose.

*Colorado:* The daily bag limit for dark geese is 3 geese.

*Idaho:* Northern Unit—The daily bag limit is 4 geese, including 4 dark geese, but not more than 3 light geese.

Southwest Unit and Southeastern Unit—The daily bag limit on dark geese is 4.

*Montana:* West of Divide Zone and East of Divide Zone—The daily bag limit of dark geese is 4.

*Nevada:* The daily bag limit for dark geese is 3 except in the Lincoln and Clark County Zone, where the daily bag limit of dark geese is 2.

*New Mexico:* The daily bag limit for dark geese is 3.

*Utah:* The daily bag limit for dark geese is 3.

*Wyoming:* The daily bag limit for dark geese is 4.

*Quota Zones:* Seasons on dark geese must end upon attainment of individual quotas of dusky Canada geese allotted to the designated areas of Oregon and Washington. The September Canada goose season, the regular goose season, any special late dark goose season, and any extended falconry season, combined, must not exceed 107 days, and the established quota of dusky Canada geese must not be exceeded. Hunting of dark geese in those designated areas will only be by hunters possessing a State-issued permit authorizing them to do so. In a Service-approved investigation, the State must obtain quantitative information on hunter compliance of those regulations aimed at reducing the take of dusky Canada geese. If the monitoring program cannot be conducted, for any reason, the season must immediately close. In the designated areas of the Washington Quota Zone, a special late dark goose season may be held between the Saturday following the close of the general goose season and March 10. In the Special Canada Goose Management Area of Oregon, the framework closing date is extended to the Sunday closest to March 1 (March 3). Regular dark goose seasons may be split into 3 segments within the Oregon and Washington quota zones.

Swans

In portions of the Pacific Flyway (Montana, Nevada, and Utah), an open season for taking a limited number of swans may be selected. Permits will be issued by the State and will authorize each permittee to take no more than 1 swan per season. Each State's season may open no earlier than the Saturday nearest October 1 (September 28). These seasons are also subject to the following conditions:

*Montana:* No more than 500 permits may be issued. The season must end no later than December 1. The State must implement a harvest-monitoring program to measure the species composition of the swan harvest and should use appropriate measures to maximize hunter compliance in reporting bill-measurement and color information.

*Utah:* No more than 2,000 permits may be issued. During the swan season, no more than 10 trumpeter swans may be taken. The season must end no later than the second Sunday in December (December 8) or upon attainment of 10 trumpeter swans in the harvest, whichever occurs earliest. The Utah season remains subject to the terms of the Memorandum of Agreement entered into with the Service in August, 2001, regarding harvest monitoring, season closure procedures, and education requirements to minimize the take of trumpeter swans during the swan season.

*Nevada:* No more than 650 permits may be issued. During the swan season, no more than 5 trumpeter swans may be taken. The season must end no later than the Sunday following January 1 (January 5) or upon attainment of 5 trumpeter swans in the harvest, whichever occurs earliest.

In addition, the States of Utah and Nevada must implement a harvest-monitoring program to measure the species composition of the swan harvest. The harvest-monitoring program must require that all harvested swans or their species-determinant parts be examined by either State or Federal biologists for the purpose of species classification. The States should use appropriate measures to maximize hunter compliance in providing bagged swans for examination. Further, the States of Montana, Nevada, and Utah must achieve at least an 80-percent compliance rate, or subsequent permits will be reduced by 10 percent. All three States must provide to the Service by June 30, 2003, a report detailing harvest, hunter participation, reporting compliance, and monitoring of swan populations in the designated hunt areas.

Tundra Swans

In portions of the Atlantic Flyway (North Carolina and Virginia) and the Central Flyway (North Dakota, South Dakota [east of the Missouri River], and that portion of Montana in the Central Flyway), an open season for taking a limited number of tundra swans may be selected. Permits will be issued by the States that authorize the take of no more than 1 tundra swan per permit. A second permit may be issued to hunters from unused permits remaining after the first drawing. The States must obtain harvest and hunter participation data. These seasons are also subject to the following conditions:

In the Atlantic Flyway:

—The season is experimental.
—The season may be 90 days, from October 1 to January 31.
—In North Carolina, no more than 5,000 permits may be issued.
—In Virginia, no more than 600 permits may be issued.

In the Central Flyway:

—The season may be 107 days, from the Saturday nearest October 1 (September 28) to January 31.
—In the Central Flyway portion of Montana, no more than 500 permits may be issued.
—In North Dakota, no more than 2,000 permits may be issued.
—In South Dakota, no more than 1,500 permits may be issued.

**Area, Unit, and Zone Descriptions**

*Ducks (Including Mergansers) and Coots*

*Atlantic Flyway*

Connecticut

*North Zone:* That portion of the State north of I–95.

*South Zone:* Remainder of the State.

Maine

*North Zone:* That portion north of the line extending east along Maine State Highway 110 from the New Hampshire and Maine border to the intersection of Maine State Highway 11 in Newfield; then north and east along Route 11 to the intersection of U.S. Route 202 in Auburn; then north and east on Route 202 to the intersection of Interstate Highway 95 in Augusta; then north and east along I–95 to Route 15 in Bangor; then east along Route 15 to Route 9; then east along Route 9 to Stony Brook in Baileyville; then east along Stony Brook to the United States border.

*South Zone:* Remainder of the State.

Massachusetts

*Western Zone:* That portion of the State west of a line extending south from the Vermont border on I–91 to MA 9, west on MA 9 to MA 10, south on MA 10 to U.S. 202, south on U.S. 202 to the Connecticut border.

*Central Zone:* That portion of the State east of the Berkshire Zone and west of a line extending south from the New Hampshire border on I–95 to U.S. 1, south on U.S. 1 to I–93, south on I–93 to MA 3, south on MA 3 to U.S. 6, west on U.S. 6 to MA 28, west on MA 28 to I–195, west to the Rhode Island border; except the waters, and the lands 150 yards inland from the high-water mark, of the Assonet River upstream to the MA 24 bridge, and the Taunton River upstream to the Center St.-Elm St. bridge shall be in the Coastal Zone.

*Coastal Zone:* That portion of Massachusetts east and south of the Central Zone.

New Hampshire

*Coastal Zone:* That portion of the State east of a line extending west from the Maine border in Rollinsford on NH 4 to the city of Dover, south to NH 108, south along NH 108 through Madbury, Durham, and Newmarket to NH 85 in Newfields, south to NH 101 in Exeter, east to NH 51 (Exeter-Hampton Expressway), east to I–95 (New Hampshire Turnpike) in Hampton, and south along I–95 to the Massachusetts border.

*Inland Zone:* That portion of the State north and west of the above boundary and along the Massachusetts border crossing the Connecticut River to Interstate 91 and northward in Vermont to Route 2, east to 102, northward to the Canadian border.

New Jersey

*Coastal Zone:* That portion of the State seaward of a line beginning at the New York border in Raritan Bay and extending west along the New York border to NJ 440 at Perth Amboy; west on NJ 440 to the Garden State Parkway; south on the Garden State Parkway to the shoreline at Cape May and continuing to the Delaware border in Delaware Bay.

*North Zone:* That portion of the State west of the Coastal Zone and north of a line extending west from the Garden State Parkway on NJ 70 to the New Jersey Turnpike, north on the turnpike to U.S. 206, north on U.S. 206 to U.S. 1 at Trenton, west on U.S. 1 to the Pennsylvania border in the Delaware River.

*South Zone:* That portion of the State not within the North Zone or the Coastal Zone.

New York

*Lake Champlain Zone:* The U.S. portion of Lake Champlain and that area east and north of a line extending along NY 9B from the Canadian border to U.S. 9, south along U.S. 9 to NY 22 south of Keesville; south along NY 22 to the west shore of South Bay, along and around the shoreline of South Bay to NY 22 on the east shore of South Bay; southeast along NY 22 to U.S. 4, northeast along U.S. 4 to the Vermont border.

*Long Island Zone:* That area consisting of Nassau County, Suffolk County, that area of Westchester County southeast of I–95, and their tidal waters.

*Western Zone:* That area west of a line extending from Lake Ontario east along the north shore of the Salmon River to I–81, and south along I–81 to the Pennsylvania border.

*Northeastern Zone:* That area north of a line extending from Lake Ontario east along the north shore of the Salmon River to I–81 to NY 31, east along NY 31 to NY 13, north along NY 13 to NY 49, east along NY 49 to NY 365, east along NY 365 to NY 28, east along NY 28 to NY 29, east along NY 29 to I–87, north along I–87 to U.S. 9 (at Exit 20), north along U.S. 9 to NY 149, east along NY 149 to U.S. 4, north along U.S. 4 to the Vermont border, exclusive of the Lake Champlain Zone.

*Southeastern Zone:* The remaining portion of New York.

Pennsylvania

*Lake Erie Zone:* The Lake Erie waters of Pennsylvania and a shoreline margin along Lake Erie from New York on the east to Ohio on the west extending 150 yards inland, but including all of Presque Isle Peninsula.

*Northwest Zone:* The area bounded on the north by the Lake Erie Zone and including all of Erie and Crawford Counties and those portions of Mercer and Venango Counties north of I–80.

*North Zone:* That portion of the State east of the Northwest Zone and north of a line extending east on I–80 to U.S. 220, Route 220 to I–180, I–180 to I–80, and I–80 to the Delaware River.

*South Zone:* The remaining portion of Pennsylvania.

Vermont

*Lake Champlain Zone:* The U.S. portion of Lake Champlain and that area north and west of the line extending from the New York border along U.S. 4 to VT 22A at Fair Haven; VT 22A to U.S. 7 at Vergennes; U.S. 7 to the Canadian border.

*Interior Zone:* That portion of Vermont west of the Lake Champlain Zone and eastward of a line extending

from the Massachusetts border at Interstate 91; north along Interstate 91 to U.S. 2; east along U.S. 2 to VT 102; north along VT 102 to VT 253; north along VT 253 to the Canadian border.

*Connecticut River Zone:* The remaining portion of Vermont east of the Interior Zone.

West Virginia

*Zone 1:* That portion outside the boundaries in Zone 2.

*Zone 2 (Allegheny Mountain Upland):* That area bounded by a line extending south along U.S. 220 through Keyser to U.S. 50; U.S. 50 to WV 93; WV 93 south to WV 42; WV 42 south to Petersburg; WV 28 south to Minnehaha Springs; WV 39 west to U.S. 219; U.S. 219 south to I–64; I–64 west to U.S. 60; U.S. 60 west to U.S. 19; U.S. 19 north to I–79, I–79 north to I–68; I–68 east to the Maryland border; and along the border to the point of beginning.

*Mississippi Flyway*

Alabama

*South Zone:* Mobile and Baldwin Counties.

*North Zone:* The remainder of Alabama.

Illinois

*North Zone:* That portion of the State north of a line extending east from the Iowa border along Illinois Highway 92 to Interstate Highway 280, east along I–280 to I–80, then east along I–80 to the Indiana border.

*Central Zone:* That portion of the State south of the North Zone to a line extending east from the Missouri border along the Modoc Ferry route to Modoc Ferry Road, east along Modoc Ferry Road to Modoc Road, northeasterly along Modoc Road and St. Leo's Road to Illinois Highway 3, north along Illinois 3 to Illinois 159, north along Illinois 159 to Illinois 161, east along Illinois 161 to Illinois 4, north along Illinois 4 to Interstate Highway 70, east along I–70 to the Bond County line, north and east along the Bond County line to Fayette County, north and east along the Fayette County line to Effingham County, east and south along the Effingham County line to I–70, then east along I–70 to the Indiana border.

*South Zone:* The remainder of Illinois.

Indiana

*North Zone:* That portion of the State north of a line extending east from the Illinois border along State Road 18 to U.S. Highway 31, north along U.S. 31 to U.S. 24, east along U.S. 24 to Huntington, then southeast along U.S. 224 to the Ohio border.

*Ohio River Zone:* That portion of the State south of a line extending east from the Illinois border along Interstate Highway 64 to New Albany, east along State Road 62 to State Road 56, east along State Road 56 to Vevay, east and north on State 156 along the Ohio River to North Landing, north along State 56 to U.S. Highway 50, then northeast along U.S. 50 to the Ohio border.

*South Zone:* That portion of the State between the North and Ohio River Zone boundaries.

Iowa

*North Zone:* That portion of the State north of a line extending east from the Nebraska border along State Highway 175 to State Highway 37, southeast along State Highway 37 to U.S. Highway 59, south along U.S. 59 to Interstate Highway 80, then east along I–80 to the Illinois border.

*South Zone:* The remainder of Iowa.

Kentucky

*West Zone:* All counties west of and including Butler, Daviess, Ohio, Simpson, and Warren Counties.

*East Zone:* The remainder of Kentucky.

Louisiana

*West Zone:* That portion of the State west and south of a line extending south from the Arkansas border along Louisiana Highway 3 to Bossier City, east along Interstate Highway 20 to Minden, south along Louisiana 7 to Ringgold, east along Louisiana 4 to Jonesboro, south along U.S. Highway 167 to Lafayette, southeast along U.S. 90 to the Mississippi State line.

*East Zone:* The remainder of Louisiana.

*Catahoula Lake Area:* All of Catahoula Lake, including those portions known locally as Round Prairie, Catfish Prairie, and Frazier's Arm. See State regulations for additional information.

Michigan

*North Zone:* The Upper Peninsula.

*Middle Zone:* That portion of the Lower Peninsula north of a line beginning at the Wisconsin border in Lake Michigan due west of the mouth of Stony Creek in Oceana County; then due east to, and easterly and southerly along the south shore of Stony Creek to Scenic Drive, easterly and southerly along Scenic Drive to Stony Lake Road, easterly along Stony Lake and Garfield Roads to Michigan Highway 20, east along Michigan 20 to U.S. Highway 10 Business Route (BR) in the city of Midland, easterly along U.S. 10 BR to U.S. 10, easterly along U.S. 10 to Interstate Highway 75/U.S. Highway 23, northerly along I–75/U.S. 23 to the U.S. 23 exit at Standish, easterly along U.S. 23 to the centerline of the Au Gres River, then southerly along the centerline of the Au Gres River to Saginaw Bay, then on a line directly east 10 miles into Saginaw Bay, and from that point on a line directly northeast to the Canadian border.

*South Zone:* The remainder of Michigan.

Missouri

*North Zone:* That portion of Missouri north of a line running west from the Illinois border (Lock and Dam 25) on Lincoln County Highway N to Missouri Highway 79; south on Missouri Highway 79 to Missouri Highway 47; west on Missouri Highway 47 to Interstate 70; west on Interstate 70 to U.S. Highway 54; south on U.S. Highway 54 to U.S. Highway 50; west on U.S. Highway 50 to the Kansas border.

*South Zone:* That portion of Missouri south of a line running west from the Illinois border on Missouri Highway 34 to Interstate 55; south on Interstate 55 to U.S. Highway 62; west on U.S. Highway 62 to Missouri Highway 53; north on Missouri Highway 53 to Missouri Highway 51; north on Missouri Highway 51 to U.S. Highway 60; west on U.S. Highway 60 to Missouri Highway 21; north on Missouri Highway 21 to Missouri Highway 72; west on Missouri Highway 72 to Missouri Highway 32; west on Missouri Highway 32 to U.S. Highway 65; north on U.S. Highway 65 to U.S. Highway 54; west on U.S. Highway 54 to the Kansas border.

*Middle Zone:* The remainder of Missouri.

Ohio

*North Zone:* That portion of the State north of a line extending east from the Indiana border along U.S. Highway 30 to State Route 37, south along SR 37 to SR 95, east along SR 95 to LaRue-Prospect Road, east along LaRue-Prospect Road to SR 203, south along SR 203 to SR 739, east along SR 739 to SR 4, north along SR 4 to SR 309, east along SR 309 to U.S. 23, north along U.S. 23 to SR 231, north along SR 231 to U.S. 30, east along U.S. 30 to SR 42, north along SR 42 to SR 603, south along SR 603 to U.S. 30, east along U.S. 30 to SR 60, south along SR 60 to SR 39/60, east along SR 39/60 to SR 39, east along SR 39 to SR 241, east along SR 241 to U.S. 30, then east along U.S. 30 to the West Virginia border.

*South Zone:* The remainder of Ohio.

Tennessee

*Reelfoot Zone:* All or portions of Lake and Obion Counties.

*State Zone:* The remainder of Tennessee.

Wisconsin

*North Zone:* That portion of the State north of a line extending east from the Minnesota border along State Highway 77 to State 27, south along State 27 and 77 to U.S. Highway 63, and continuing south along State 27 to Sawyer County Road B, south and east along County B to State 70, southwest along State 70 to State 27, south along State 27 to State 64, west along State 64/27 and south along State 27 to U.S. 12, south and east on State 27/U.S. 12 to U.S. 10, east on U.S. 10 to State 310, east along State 310 to State 42, north along State 42 to State 147, north along State 147 to State 163, north along State 163 to Kewaunee County Trunk A, north along County Trunk A to State 57, north along State 57 to the Kewaunee/Door County Line, west along the Kewaunee/Door County Line to the Door/Brown County Line, west along the Door/Brown County Line to the Door/Oconto/Brown County Line, northeast along the Door/Oconto County Line to the Marinette/Door County Line, northeast along the Marinette/Door County Line to the Michigan border.

*South Zone:* The remainder of Wisconsin.

*Central Flyway*

Kansas

*High Plains Zone:* That portion of the State west of U.S. 283.

*Low Plains Early Zone:* That area of Kansas east of U.S. 283, and generally west of a line beginning at the Junction of the Nebraska border and KS 28; south on KS 28 to U.S. 36; east on U.S. 36 to KS 199; south on KS 199 to Republic Co. Road 563; south on Republic Co. Road 563 to KS 148; east on KS 148 to Republic Co. Road 138; south on Republic Co. Road 138 to Cloud Co. Road 765; south on Cloud Co. Road 765 to KS 9; west on KS 9 to U.S. 24; west on U.S. 24 to U.S. 281; north on U.S. 281 to U.S. 36; west on U.S. 36 to U.S. 183; south on U.S. 183 to U.S. 24; west on U.S. 24 to KS 18; southeast on KS 18 to U.S. 183; south on U.S. 183 to KS 4; east on KS 4 to I–135; south on I–135 to KS 61; southwest on KS 61 to KS 96; northwest on KS 96 to U.S. 56; west on U.S. 56 to U.S. 281; south on U.S. 281 to U.S. 54; and west on U.S. 54 to U.S. 183; north on U.S. 183 to U.S. 56; southwest on U.S. 56 to U.S. 283.

*Low Plains Late Zone:* The remainder of Kansas.

Montana (Central Flyway Portion)

*Zone 1:* The Counties of Blaine, Carbon, Carter, Daniels, Dawson, Fallon, Fergus, Garfield, Golden Valley, Judith Basin, McCone, Musselshell, Petroleum, Phillips, Powder River, Richland, Roosevelt, Sheridan, Stillwater, Sweet Grass, Valley, Wheatland, Wibaux, and Yellowstone.

*Zone 2:* The remainder of Montana.

Nebraska

*High Plains Zone:* That portion of the State west of highways U.S. 183 and U.S. 20 from the South Dakota border to Ainsworth, NE 7 and NE 91 to Dunning, NE 2 to Merna, NE 92 to Arnold, NE 40 and NE 47 through Gothenburg to NE 23, NE 23 to Elwood, and U.S. 283 to the Kansas border.

*Low Plains Zone 1:* That portion of the State east of the High Plains Zone and north and west of a line extending from the South Dakota border along NE 26E Spur to NE 12, west on NE 12 to the Knox/Boyd County line, south along the county line to the Niobrara River and along the Niobrara River to U.S. 183 (the High Plains Zone line). Where the Niobrara River forms the boundary, both banks will be in Zone 1.

*Low Plains Zone 2:* Area bounded by designated Federal and State highways and political boundaries beginning at the Kansas-Nebraska border on U.S. Hwy. 73; north to NE Hwy. 67 north to U.S. Hwy 136; east to the Steamboat Trace (Trace); north to Federal Levee R–562; north and west to the Trace/Burlington Northern Railroad right-of-way; north to NE Hwy 2; west to U.S. Hwy 75; north to NE Hwy. 2; west to NE Hwy. 43; north to U.S. Hwy. 34; east to NE Hwy. 63; north and west to U.S. Hwy. 77; north to NE Hwy. 92; west to U.S. Hwy. 81; south to NE Hwy. 66; west to NE Hwy. 14; south to U.S. Hwy 34; west to NE Hwy. 2; south to U.S. Hwy. I–80; west to Gunbarrel Rd. (Hall/Hamilton county line); south to Giltner Rd.; west to U.S. Hwy. 281; south to U.S. Hwy. 34; west to NE Hwy 10; north to County Road ''R'' (Kearney County) and County Road #742 (Phelps County); west to County Road #438 (Gosper County line); south along County Road #438 (Gosper County line) to County Road #726 (Furnas County Line); east to County Road #438 (Harlan County Line); south to U.S. Hwy 34; south and west to U.S. Hwy. 136; east to NE Hwy. 10; south to the Kansas-Nebraska border.

*Low Plains Zone 3:* The area east of the High Plains Zone, excluding Low Plains Zone 1, north of Low Plains Zone 2.

*Low Plains Zone 4:* The area east of the High Plains Zone and south of Zone 2.

New Mexico (Central Flyway Portion)

*North Zone:* That portion of the State north of I–40 and U.S. 54.

*South Zone:* The remainder of New Mexico.

North Dakota

*High Plains Unit:* That portion of the State south and west of a line from the South Dakota border along U.S. 83 and I–94 to ND 41, north to U.S. 2, west to the Williams/Divide County line, then north along the County line to the Canadian border.

*Low Plains:* The remainder of North Dakota.

Oklahoma

*High Plains Zone:* The Counties of Beaver, Cimarron, and Texas.

*Low Plains Zone 1:* That portion of the State east of the High Plains Zone and north of a line extending east from the Texas border along OK 33 to OK 47, east along OK 47 to U.S. 183, south along U.S. 183 to I–40, east along I–40 to U.S. 177, north along U.S. 177 to OK 33, west along OK 33 to I–35, north along I–35 to U.S. 412, west along U.S. 412 to OK 132, then north along OK 132 to the Kansas border.

*Low Plains Zone 2:* The remainder of Oklahoma.

South Dakota

*High Plains Unit:* That portion of the State west of a line beginning at the North Dakota border and extending south along U.S. 83 to U.S. 14, east along U.S. 14 to Blunt-Canning Road in Blunt, south along Blunt-Canning Road to SD 34, east to SD 47, south to I–90, east to SD 47, south to SD 49, south to Colome and then continuing south on U.S. 183 to the Nebraska border.

*North Zone:* That portion of northeastern South Dakota east of the High Plains Unit and north of a line extending east along U.S. 212 to the Minnesota border.

*South Zone:* That portion of Gregory County east of SD 47, Charles Mix County south of SD 44 to the Douglas County line, south on SD 50 to Geddes, east on the Geddes Hwy. to U.S. 281, south on U.S. 281 and U.S. 18 to SD 50, south and east on SD 50 to Bon Homme County line, the Counties of Bon Homme, Yankton, and Clay south of SD 50, and Union County south and west of SD 50 and I–29.

*Middle Zone:* The remainder of South Dakota.

Texas

*High Plains Zone:* That portion of the State west of a line extending south from the Oklahoma border along U.S. 183 to Vernon, south along U.S. 283 to Albany, south along TX 6 to TX 351 to Abilene, south along U.S. 277 to Del Rio, then south along the Del Rio International Toll Bridge access road to the Mexico border.

*Low Plains North Zone:* That portion of northeastern Texas east of the High Plains Zone and north of a line beginning at the International Toll Bridge south of Del Rio, then extending east on U.S. 90 to San Antonio, then continuing east on I–10 to the Louisiana border at Orange, Texas.

*Low Plains South Zone:* The remainder of Texas.

Wyoming (Central Flyway portion)

*Zone 1:* The Counties of Converse, Goshen, Hot Springs, Natrona, Platte, and Washakie Counties; and the portion of Park County east of the Shoshone National Forest boundary and south of a line beginning where the Shoshone National Forest boundary meets Park County Road 8VC, east along Park County Road 8VC to Park County Road 1AB, continuing east along Park County Road 1AB to Wyoming Highway 120, north along WY Highway 120 to WY Highway 294, south along WY Highway 294 to Lane 9, east along Lane 9 to Powel and WY Highway 14A, and finally east along WY Highway 14A to the Park County and Big Horn County line.

*Zone 2:* The remainder of Wyoming.

*Pacific Flyway*

Arizona—Game Management Units (GMU) as follows:

*South Zone:* Those portions of GMUs 6 and 8 in Yavapai County, and GMUs 10 and 12B–45.

*North Zone:* GMUs 1–5, those portions of GMUs 6 and 8 within Coconino County, and GMUs 7, 9, 12A.

California

*Northeastern Zone:* In that portion of California lying east and north of a line beginning at the intersection of the Klamath River with the California-Oregon line; south and west along the Klamath River to the mouth of Shovel Creek; along Shovel Creek to its intersection with Forest Service Road 46N05 at Burnt Camp; west to its junction with Forest Service Road 46N10; south and east to its Junction with County Road 7K007; south and west to its junction with Forest Service Road 45N22; south and west to its junction with Highway 97 and Grass Lake Summit; south along to its junction with Interstate 5 at the town of Weed; south to its junction with Highway 89; east and south along Highway 89 to main street Greenville; north and east to its junction with North Valley Road; south to its junction of Diamond Mountain Road; north and east to its junction with North Arm Road; south and west to the junction of North Valley Road; south to the junction with Arlington Road (A22); west to the junction of Highway 89; south and west to the junction of Highway 70; east on Highway 70 to Highway 395; south and east on Highway 395 to the point of intersection with the California-Nevada state line; north along the California-Nevada state line to the junction of the California-Nevada-Oregon state lines; west along the California-Oregon state line to the point of origin.

*Colorado River Zone:* Those portions of San Bernardino, Riverside, and Imperial Counties east of a line extending from the Nevada border south along U.S. 95 to Vidal Junction; south on a road known as ''Aqueduct Road'' in San Bernardino County through the town of Rice to the San Bernardino-Riverside County line; south on a road known in Riverside County as the ''Desert Center to Rice Road'' to the town of Desert Center; east 31 miles on I–10 to the Wiley Well Road; south on this road to Wiley Well; southeast along the Army-Milpitas Road to the Blythe, Brawley, Davis Lake intersections; south on the Blythe-Brawley paved road to the Ogilby and Tumco Mine Road; south on this road to U.S. 80; east seven miles on U.S. 80 to the Andrade-Algodones Road; south on this paved road to the Mexican border at Algodones, Mexico.

*Southern Zone:* That portion of southern California (but excluding the Colorado River Zone) south and east of a line extending from the Pacific Ocean east along the Santa Maria River to CA 166 near the City of Santa Maria; east on CA 166 to CA 99; south on CA 99 to the crest of the Tehachapi Mountains at Tejon Pass; east and north along the crest of the Tehachapi Mountains to CA 178 at Walker Pass; east on CA 178 to U.S. 395 at the town of Inyokern; south on U.S. 395 to CA 58; east on CA 58 to I–15; east on I–15 to CA 127; north on CA 127 to the Nevada border.

*Southern San Joaquin Valley Temporary Zone:* All of Kings and Tulare Counties and that portion of Kern County north of the Southern Zone.

*Balance-of-the-State Zone:* The remainder of California not included in the Northeastern, Southern, and Colorado River Zones, and the Southern San Joaquin Valley Temporary Zone.

Idaho

*Zone 1:* Includes all lands and waters within the Fort Hall Indian Reservation, including private inholdings; Bannock County; Bingham County, except that portion within the Blackfoot Reservoir drainage; and Power County east of ID 37 and ID 39.

*Zone 2:* Includes the following Counties or portions of Counties: Adams; Bear Lake; Benewah; Bingham within the Blackfoot Reservoir drainage; those portions of Blaine west of ID 75, south and east of U.S. 93, and between ID 75 and U.S. 93 north of U.S. 20 outside the Silver Creek drainage; Bonner; Bonneville; Boundary; Butte; Camas; Caribou except the Fort Hall Indian Reservation; Cassia within the Minidoka National Wildlife Refuge; Clark; Clearwater; Custer; Elmore within the Camas Creek drainage; Franklin; Fremont; Idaho; Jefferson; Kootenai; Latah; Lemhi; Lewis; Madison; Nez Perce; Oneida; Power within the Minidoka National Wildlife Refuge; Shoshone; Teton; and Valley Counties.

*Zone 3:* Includes the following Counties or portions of Counties: Ada; Blaine between ID 75 and U.S. 93 south of U.S. 20 and that additional area between ID 75 and U.S. 93 north of U.S. 20 within the Silver Creek drainage; Boise; Canyon; Cassia except within the Minidoka National Wildlife Refuge; Elmore except the Camas Creek drainage; Gem; Gooding; Jerome; Lincoln; Minidoka; Owyhee; Payette; Power west of ID 37 and ID 39 except that portion within the Minidoka National Wildlife Refuge; Twin Falls; and Washington Counties.

Nevada

*Lincoln and Clark County Zone:* All of Clark and Lincoln Counties.

*Remainder-of-the-State Zone:* The remainder of Nevada.

Oregon

*Zone 1:* Clatsop, Tillamook, Lincoln, Lane, Douglas, Coos, Curry, Josephine, Jackson, Linn, Benton, Polk, Marion, Yamhill, Washington, Columbia, Multnomah, Clackamas, Hood River, Wasco, Sherman, Gilliam, Morrow and Umatilla Counties.

*Columbia Basin Mallard Management Unit:* Gilliam, Morrow, and Umatilla Counties.

*Zone 2:* The remainder of the State.

Utah

*Zone 1:* All of Box Elder, Cache, Daggett, Davis, Duchesne, Morgan, Rich, Salt Lake, Summit, Unitah, Utah, Wasatch, and Weber Counties and that part of Toole County north of I–80.

*Zone 2:* The remainder of Utah.

Washington

*East Zone:* All areas east of the Pacific Crest Trail and east of the Big White Salmon River in Klickitat County.

*Columbia Basin Mallard Management Unit:* Same as East Zone.

*West Zone:* All areas to the west of the East Zone.

**Geese**

*Atlantic Flyway*

Connecticut

*NAP L-Unit:* That portion of Fairfield County north of Interstate 95 and that portion of New Haven County: starting at I–95 bridge on Housatonic River; north of Interstate 95; west of Route 10 to the intersection of Interstate 691; west along Interstate 691 to Interstate 84; west and south on Interstate 84 to Route 67; north along Route 67 to the Litchfield County line, then extending west along the Litchfield County line to the Shepaug River, then south to the intersection of the Litchfield and Fairfield County lines.

*NAP H-Unit:* All of the rest of the State not included in the AP or NAP–L descriptions.

*AP Unit:* Litchfield County and the portion of Hartford County, west of a line beginning at the Massachusetts border in Suffield and extending south along Route 159 to its intersection with Route 91 in Hartford, and then extending south along Route 91 to its intersection with the Hartford/Middlesex County line.

*South Zone:* Same as for ducks.

*North Zone:* Same as for ducks.

Maryland

*SJBP Zone:* Allegheny, Carroll, Frederick, Garrett, Washington counties and the portion of Montgomery County south of Interstate 270 and west of Interstate 495 to the Potomac River.

*AP Zone:* Remainder of the State.

Massachusetts

*NAP Zone:* Central Zone (same as for ducks) and that portion of the Coastal Zone that lies north of route 139 from Green Harbor.

*AP Zone:* Remainder of the State.

*Special Late Season Area:* That portion of the Coastal Zone (see duck zones) that lies north of Route 14, east of St. George Road, and east of the Powder Point Bridge.

New Hampshire

Same zones as for ducks.

New Jersey

North—that portion of the State within a continuous line that runs east along the New York State boundary line to the Hudson River; then south along the New York State boundary to its intersection with Route 440 at Perth Amboy; then west on Route 440 to its intersection with Route 287; then west along Route 287 to its intersection with Route 206 in Bedminster (Exit 18); then north along Route 206 to its intersection with Route 94: then west along Route 94 to the tollbridge in Columbia; then north along the Pennsylvania State boundary in the Delaware River to the beginning point.

South—that portion of the State within a continuous line that runs west from the Atlantic Ocean at Ship Bottom along Route 72 to Route 70; then west along Route 70 to Route 206; then south along Route 206 to Route 536; then west along Route 536 to Route 322; then west along Route 322 to Route 55; then south along Route 55 to Route 553 (Buck Road); then south along Route 553 to Route 40; then east along Route 40 to route 55; then south along Route 55 to Route 552 (Sherman Avenue); then west along Route 552 to Carmel Road; then south along Carmel Road to Route 49; then east along Route 49 to Route 555; then south along Route 555 to Route 553; then east along Route 553 to Route 649; then north along Route 649 to Route 670; then east along Route 670 to Route 47; then north along Route 47 to Route 548; then east along Route 548 to Route 49; then east along Route 49 to Route 50; then south along Route 50 to Route 9; then south along Route 9 to Route 625 (Sea Isle City Boulevard); then east along Route 625 to the Atlantic Ocean; then north to the beginning point.

New York

*Lake Champlain Area:* that area east and north of a continuous line extending along Route 11 from the New York-Canada boundary south to Route 9B, south along Route 9B to Route 9, south along Route 9 to Route 22 south of Keeseville, south along Route 22 to the west shore of South Bay along and around the shoreline of South Bay to Route 22 on the east shore of South Bay, southeast along Route 22 to Route 4, northeast along Route 4 to the New York-Vermont boundary.

*St. Lawrence Area:* New York State Wildlife Management Units (WMUs): 6A, 6C, and 6H.

*Northeast Area:* that area north of a continuous line extending from Lake Ontario east along the north shore of the Salmon River to Interstate 81, south along Interstate Route 81 to Route 31, east along Route 31 to Route 13, north along Route 13 to Route 49, east along Route 49 to Route 365, east along Route 365 to Route 28, east along Route 28 to Route 29, east along Route 29 to Interstate Route 87, north along Interstate Route 87 to Route 9 (at Exit 20), north along Route 9 to Route 149, east along Route 149 to Route 4, north along Route 4 to the New York-Vermont boundary, excluding the Lake Champlain and St. Lawrence Areas.

*Southwest Area:* consists of the following WMUs: 9C, 9G, 9H, 9J, 9K, 9M, 9N, and 9R; that part of WMU 9A lying south of a continuous line extending from the New York-Ontario boundary east along Interstate Route 190 to State Route 31, then east along Route 31 to Route 78 in Lockport; that part of WMU 9F lying in Erie County; and that part of WMU 8G lying south and west of a continuous line extending from WMU 9F east along the NYS Thruway to Exit 48 in Batavia, then south along State Route 98 to WMU 9H.

*South Central Area:* consists of the following WMUs: 3A, 3C, 3H, 3K, 3N, 3P, 3R, 4G, 4H, 4N, 4O, 4P, 4R, 4W, 4X, 7R, 7S, 8T, 8W, 8X, 8Y, 9P, 9S, 9T, 9W, 9X, and 9Y; that part of WMU 3G lying in Putnam County; that part of WMU 3S lying northwest of Interstate Route 95; and that part of WMU 7M lying south of a continuous line extending from IR 81 at Cortland east along 41 Route to Route 26, then north along Route 26 to Route 23, then east along Route 23 to Route 8 at South New Berlin.

*West Central Area:* that area west of a continuous line extending from Lake Ontario east along the north shore of the Salmon River to Interstate Route 81 and then south along Interstate Route 81 to the New York-Pennsylvania boundary, excluding the Southwest and South Central Areas.

*East Central Area:* that area east of Interstate 81 that is south of a continuous line extending from Interstate Route 81 east along Route 31 to Route 13, north along Route 13 to Route 49, east along Route 49 to Route 365, east along Route 365 to Route 28, east along Route 28 to Route 29, east along Route 29 to Interstate Route 87, north along Interstate Route 87 to Route 9 (at Exit 20), north along Route 9 to Route 149, east along Route 149 to Route 4, north along Route 4 to the New York-Vermont boundary, and northwest of Interstate Route 95 in Westchester County, excluding the South Central Area.

*Western Long Island Area:* that area of Westchester County and its tidal waters southeast of Interstate Route 95 and that area of Nassau and Suffolk Counties lying west of a continuous line extending due south from the New York-Connecticut boundary to the northern end of Sound Road (near Wading River), then south along Sound

Road to North Country Road, then west along North Country Road to Randall Road, then south along Randall Road to State Route 25A, then west along Route 25A to the William Floyd Parkway (County Route 46), then south along William Floyd Parkway to Fire Island Beach Road, then due south to International waters.

*Eastern Long Island Area:* that area of Suffolk County that is not part of the Western Long Island Area.

*Special Late Hunting Area:* consists of that area of Westchester County lying southeast of Interstate Route 95 and that area of Nassau and Suffolk Counties lying north of State Route 25A and west of a continuous line extending northward from State Route 25A along Randall Road (near Shoreham) to North Country Road, then east to Sound Road and then north to Long Island Sound and then due north to the New York-Connecticut boundary.

North Carolina

*SJBP Hunt Zone:* Includes the following counties or portions of counties: Anson, Cabarrus, Chatham, Davidson, Durham, Halifax (that portion east of NC 903), Iredell (that portion south of Interstate 40), Montgomery (that portion west of NC 109), Northampton (all of the county with the exception of that portion that is both north of U.S. 158 and east of NC 35), Richmond (that portion south of NC 73 and west of U.S. 220 and north of U.S. 74), Rowan, Stanly, Union, and Wake.

*RP Hunt Zone:* Includes the following counties or portions of counties: Alamance, Alleghany, Alexander, Ashe, Avery, Beaufort, Bertie (that portion south and west of a line formed by NC 45 at the Washington Co. line to U.S. 17 in Midway, U.S. 17 in Midway to U.S. 13 in Windsor, U.S. 13 in Windsor to the Hertford Co. line), Bladen, Brunswick, Buncombe, Burke, Caldwell, Carteret, Caswell, Catawba, Cherokee, Clay, Cleveland, Columbus, Craven, Cumberland, Davie, Duplin, Edgecombe, Forsyth, Franklin, Gaston, Gates, Graham, Granville, Greene, Guilford, Halifax (that portion west of NC 903), Harnett, Haywood, Henderson, Hertford, Hoke, Iredell (that portion north of Interstate 40), Jackson, Johnston, Jones, Lee, Lenoir, Lincoln, McDowell, Macon, Madison, Martin, Mecklenburg, Mitchell, Montgomery (that portion that is east of NC 109), Moore, Nash, New Hanover, Onslow, Orange, Pamlico, Pender, Person, Pitt, Polk, Randolph, Richmond (all of the county with exception of that portion that is south of NC 73 and west of U.S. 220 and north of U.S. 74), Robeson, Rockingham, Rutherford, Sampson, Scotland, Stokes, Surry, Swain, Transylvania, Vance, Warren, Watauga, Wayne, Wilkes, Wilson, Yadkin, and Yancey.

*Northeast Hunt Unit:* Includes the following counties or portions of counties: Bertie (that portion north and east of a line formed by NC 45 at the Washington Co. line to U.S. 17 in Midway, U.S. 17 in Midway to U.S. 13 in Windsor, U.S. 13 in Windsor to the Hertford Co. line), Camden, Chowan, Currituck, Dare, Hyde, Northampton (that portion that is both north of U.S. 158 and east of NC 35), Pasquotank, Perquimans, Tyrrell, and Washington.

Pennsylvania

*Resident Canada Goose Zone:* All of Pennsylvania except for Crawford, Erie, and Mercer counties and the area east of I–83 from the Maryland state line to the intersection of U.S. Route 30 to the intersection of SR 441 to the intersection of I–283, east of I–283 to I–83, east of I–83 to the intersection of I–81, east of I–81 to the intersection of U.S. Route 322, east of U.S. Route 322 to the intersection of SR 147, east of SR 147 to the intersection of I–180, east of I–180 to the intersection of U.S. Route 220, east of U.S. Route 220 to the New York state line.

*SJBP Zone:* Erie, Mercer and Crawford Counties except for the Pymatuning Zone (the area south of SR 198 from the Ohio state line to the intersection of SR 18 to the intersection of U.S. Route 322/SR 18, to the intersection of SR 3013, south to the Crawford/Mercer County line).

*Pymatuning Zone:* The area south of SR 198 from the Ohio state line to the intersection of SR 18 to the intersection of U.S. Route 322/SR 18, to the intersection of SR 3013, south to the Crawford/Mercer County line.

*AP Zone:* The area east of I–83 from the Maryland state line to the intersection of U.S. Route 30 to the intersection of SR 441 to the intersection of I–283, east of I–283 to I–83, east of I–83 to the intersection of I–81, east of I–81 to the intersection of U.S. Route 322, east of U.S. Route 322 to the intersection of SR 147, east of SR 147 to the intersection of I–180, east of I–180 to the intersection of U.S. Route 220, east of U.S. Route 220 to the New York state line.

*Special Late Canada Goose Season Area:* The SJBP zone (excluding the Pymatuning zone) and the northern portion of the AP zone defined as east of U.S. Route 220 from the New York state line, east of U.S. Route 220 to the intersection of I–180, east of I–180 to the intersection of SR 147, east of SR 147 to the intersection of U.S. Route 322, east of U.S. Route 322 to the intersection of I–81, north of I-81 to the intersection of I–80, and north of I–80 to the New Jersey state line.

Rhode Island

*Special Area for Canada Geese:* Kent and Providence Counties and portions of the towns of Exeter and North Kingston within Washington County (see State regulations for detailed descriptions).

South Carolina

*Canada Goose Area:* Statewide except for Clarendon County and that portion of Lake Marion in Orangeburg County and Berkeley County.

Vermont

Same zones as for ducks.

Virginia

*AP Zone:* The area east and south of the following line—the Stafford County line from the Potomac River west to Interstate 95 at Fredericksburg, then south along Interstate 95 to Petersburg, then Route 460 (SE) to City of Suffolk, then south along Route 32 to the North Carolina line.

*SJBP Zone:* The area to the west of the AP Zone boundary and east of the following line: the ''Blue Ridge'' (mountain spine) at the West Virginia-Virginia Border (Loudoun County—Clarke County line) south to Interstate 64 (the Blue Ridge line follows county borders along the western edge of Loudoun-Fauquier-Rappahannock-Madison-Greene-Albemarle and into Nelson Counties), then east along Interstate Rt. 64 to Route 15, then south along Rt. 15 to the North Carolina line.

*RP Zone:* The remainder of the State west of the SJBP Zone.

*Back Bay Area:* The waters of Back Bay and its tributaries and the marshes adjacent thereto, and on the land and marshes between Back Bay and the Atlantic Ocean from Sandbridge to the North Carolina line, and on and along the shore of North Landing River and the marshes adjacent thereto, and on and along the shores of Binson Inlet Lake (formerly known as Lake Tecumseh) and Red Wing Lake and the marshes adjacent thereto.

West Virginia

Same zones as for ducks.

*Mississippi Flyway*

Alabama

Same zones as for ducks, but in addition:

*SJBP Zone:* That portion of Morgan County east of U.S. Highway 31, north of State Highway 36, and west of U.S. 231; that portion of Limestone County

south of U.S. 72; and that portion of Madison County south of Swancott Road and west of Triana Road.

Arkansas

*Northwest Zone:* Benton, Carroll, Baxter, Washington, Madison, Newton, Crawford, Van Buren, Searcy, Sebastion, Scott, Franklin, Logan, Johnson, Pope, Yell, Conway, Perry, Faulkner, Pulaski, Boone, and Marion Counties.

Illinois

Same zones as for ducks, but in addition:

North Zone:

*Northern Illinois Quota Zone:* The Counties of McHenry, Lake, Kane, DuPage, and those portions of LaSalle and Will Counties north of Interstate Highway 80.

*Central Zone:*

*Central Illinois Quota Zone:* The Counties of Grundy, Woodford, Peoria, Knox, Fulton, Tazewell, Mason, Cass, Morgan, Pike, Calhoun, and Jersey, and those portions of LaSalle and Will Counties south of Interstate Highway 80.

*South Zone:*

*Southern Illinois Quota Zone:* Alexander, Jackson, Union, and Williamson Counties.

*Rend Lake Quota Zone:* Franklin and Jefferson Counties.

Indiana

Same zones as for ducks, but in addition:

*SJBP Zone:* Jasper, LaGrange, LaPorte, Starke, and Steuben Counties, and that portion of the Jasper-Pulaski Fish and Wildlife Area in Pulaski County.

Iowa

Same zones as for ducks.

Kentucky

*Western Zone:* That portion of the State west of a line beginning at the Tennessee border at Fulton and extending north along the Purchase Parkway to Interstate Highway 24, east along I–24 to U.S. Highway 641, north along U.S. 641 to U.S. 60, northeast along U.S. 60 to the Henderson County line, then south, east, and northerly along the Henderson County line to the Indiana border.

*Ballard Reporting Area:* That area encompassed by a line beginning at the northwest city limits of Wickliffe in Ballard County and extending westward to the middle of the Mississippi River, north along the Mississippi River and along the low-water mark of the Ohio River on the Illinois shore to the Ballard-McCracken County line, south along the county line to Kentucky Highway 358, south along Kentucky 358 to U.S. Highway 60 at LaCenter; then southwest along U.S. 60 to the northeast city limits of Wickliffe.

*Henderson-Union Reporting Area:* Henderson County and that portion of Union County within the Western Zone.

*Pennyroyal/Coalfield Zone:* Butler, Daviess, Ohio, Simpson, and Warren Counties and all counties lying west to the boundary of the Western Goose Zone.

Michigan

*MVP Zone:* The MVP Zone consists of an area north and west of the point beginning at the southwest corner of Branch county, north continuing along the western border of Branch and Calhoun counties to the northwest corner of Calhoun county, then easterly to the southwest corner of Eaton county, then northerly to the southern border of Ionia county, then easterly to the southwest corner of Clinton county, then northerly along the western border of Clinton County continuing northerly along the county border of Gratiot and Montcalm counties to the southern border of Isabella county, then easterly to the southwest corner of Midland county, then northerly along the west Midland county border to Highway M–20, then easterly to U.S. Highway 10, then easterly to U.S. Interstate 75 / U.S. Highway 23, then northerly along I–75 / U.S. 23 to the U.S. 23 exit at Standish, then easterly on U.S. 23 to the centerline of the Au Gres River, then southerly along the centerline of the Au Gres River to Saginaw Bay, then on a line directly east 10 miles into Saginaw Bay, and from that point on a line directly northeast to the Canadian border.

SJBP Zone is the rest of the state, that area south and east of the boundary described above.

*Tuscola/Huron Goose Management Unit (GMU):* Those portions of Tuscola and Huron Counties bounded on the south by Michigan Highway 138 and Bay City Road, on the east by Colwood and Bay Port Roads, on the north by Kilmanagh Road and a line extending directly west off the end of Kilmanagh Road into Saginaw Bay to the west boundary, and on the west by the Tuscola-Bay County line and a line extending directly north off the end of the Tuscola-Bay County line into Saginaw Bay to the north boundary.

*Allegan County GMU:* That area encompassed by a line beginning at the junction of 136th Avenue and Interstate Highway 196 in Lake Town Township and extending easterly along 136th Avenue to Michigan Highway 40, southerly along Michigan 40 through the city of Allegan to 108th Avenue in Trowbridge Township, westerly along 108th Avenue to 46th Street, northerly ½ mile along 46th Street to 109th Avenue, westerly along 109th Avenue to I–196 in Casco Township, then northerly along I–196 to the point of beginning.

*Saginaw County GMU:* That portion of Saginaw County bounded by Michigan Highway 46 on the north; Michigan 52 on the west; Michigan 57 on the south; and Michigan 13 on the east.

*Muskegon Wastewater GMU:* That portion of Muskegon County within the boundaries of the Muskegon County wastewater system, east of the Muskegon State Game Area, in sections 5, 6, 7, 8, 17, 18, 19, 20, 29, 30, and 32, T10N R14W, and sections 1, 2, 10, 11, 12, 13, 14, 24, and 25, T10N R15W, as posted.

*Special Canada Goose Seasons:*

*Southern Michigan GMU:* That portion of the State, including the Great Lakes and interconnecting waterways and excluding the Allegan County GMU, south of a line beginning at the Ontario border at the Bluewater Bridge in the city of Port Huron and extending westerly and southerly along Interstate Highway 94 to I–69, westerly along I–69 to Michigan Highway 21, westerly along Michigan 21 to I–96, northerly along I–96 to I–196, westerly along I–196 to Lake Michigan Drive (M–45) in Grand Rapids, westerly along Lake Michigan Drive to the Lake Michigan shore, then directly west from the end of Lake Michigan Drive to the Wisconsin border.

*Central Michigan GMU:* That portion of the Lower Peninsula north of the Southern Michigan GMU but south of a line beginning at the Wisconsin border in Lake Michigan due west of the mouth of Stony Creek in Oceana County; then due east to, and easterly and southerly along the south shore of Stony Creek to Scenic Drive, easterly and southerly along Scenic Drive to Stony Lake Road, easterly along Stony Lake and Garfield Roads to Michigan Highway 20, easterly along Michigan 20 to U.S. Highway 10 Business Route (BR) in the city of Midland, easterly along U.S. 10 BR to U.S. 10, easterly along U.S. 10 to Interstate Highway 75/U.S. Highway 23, northerly along I–75/U.S. 23 to the U.S. 23 exit at Standish, easterly along U.S. 23 to the centerline of the Au Gres River, then southerly along the centerline of the Au Gres River to Saginaw Bay, then on a line directly east 10 miles into Saginaw Bay, and from that point on a line directly northeast to the Canadian border, excluding the Tuscola/Huron GMU, Saginaw County GMU, and Muskegon Wastewater GMU.

Minnesota

*West Zone:* That portion of the state encompassed by a line beginning at the junction of State Trunk Highway (STH) 60 and the Iowa border, then north and east along STH 60 to U.S. Highway 71, north along U.S. 71 to Interstate Highway 94, then north and west along I–94 to the North Dakota border.

*West Central Zone:* That area encompassed by a line beginning at the intersection of State Trunk Highway (STH) 29 and U.S. Highway 212 and extending west along U.S. 212 to U.S. 59, south along U.S. 59 to STH 67, west along STH 67 to U.S. 75, north along U.S. 75 to County State Aid Highway (CSAH) 30 in Lac qui Parle County, west along CSAH 30 to the western boundary of the State, north along the western boundary of the State to a point due south of the intersection of STH 7 and CSAH 7 in Big Stone County, and continuing due north to said intersection, then north along CSAH 7 to CSAH 6 in Big Stone County, east along CSAH 6 to CSAH 21 in Big Stone County, south along CSAH 21 to CSAH 10 in Big Stone County, east along CSAH 10 to CSAH 22 in Swift County, east along CSAH 22 to CSAH 5 in Swift County, south along CSAH 5 to U.S. 12, east along U.S. 12 to CSAH 17 in Swift County, south along CSAH 17 to CSAH 9 in Chippewa County, south along CSAH 9 to STH 40, east along STH 40 to STH 29, then south along STH 29 to the point of beginning.

*Lac qui Parle Zone:* That area encompassed by a line beginning at the intersection of U.S. Highway 212 and County State Aid Highway (CSAH) 27 in Lac qui Parle County and extending north along CSAH 27 to CSAH 20 in Lac qui Parle County, west along CSAH 20 to State Trunk Highway (STH) 40, north along STH 40 to STH 119, north along STH 119 to CSAH 34 in Lac qui Parle County, west along CSAH 34 to CSAH 19 in Lac qui Parle County, north and west along CSAH 19 to CSAH 38 in Lac qui Parle County, west and north along CSAH 38 to U.S. 75, north along U.S. 75 to STH 7, east along STH 7 to CSAH 6 in Swift County, east along CSAH 6 to County Road 65 in Swift County, south along County 65 to County 34 in Chippewa County, south along County 34 to CSAH 12 in Chippewa County, east along CSAH 12 to CSAH 9 in Chippewa County, south along CSAH 9 to STH 7, southeast along STH 7 to Montevideo and along the municipal boundary of Montevideo to U.S. 212; then west along U.S. 212 to the point of beginning.

*Northwest Zone:* That portion of the state encompassed by a line extending east from the North Dakota border along U.S. Highway 2 to State Trunk Highway (STH) 32, north along STH 32 to STH 92, east along STH 92 to County State Aid Highway (CSAH) 2 in Polk County, north along CSAH 2 to CSAH 27 in Pennington County, north along CSAH 27 to STH 1, east along STH 1 to CSAH 28 in Pennington County, north along CSAH 28 to CSAH 54 in Marshall County, north along CSAH 54 to CSAH 9 in Roseau County, north along CSAH 9 to STH 11, west along STH 11 to STH 310, and north along STH 310 to the Manitoba border.

*Special Canada Goose Seasons:*

*Southeast Zone:* That part of the State within the following described boundaries: beginning at the intersection of U.S. Highway 52 and the south boundary of the Twin Cities Metro Canada Goose Zone; thence along the U.S. Highway 52 to State Trunk Highway (STH) 57; thence along STH 57 to the municipal boundary of Kasson; thence along the municipal boundary of Kasson County State Aid Highway (CSAH) 13, Dodge County; thence along CSAH 13 to STH 30; thence along STH 30 to U.S. Highway 63; thence along U.S. Highway 63 to the south boundary of the State; thence along the south and east boundaries of the State to the south boundary of the Twin Cities Metro Canada Goose Zone; thence along said boundary to the point of beginning.

Missouri

Same zones as for ducks but in addition:

North Zone

*Swan Lake Zone:* That area bounded by U.S. Highway 36 on the north, Missouri Highway 5 on the east, Missouri 240 and U.S. 65 on the south, and U.S. 65 on the west.

Middle Zone

*Southeast Zone:* That portion of the State encompassed by a line beginning at the intersection of Missouri Highway (MO) 34 and Interstate 55 and extending south along I–55 to U.S. Highway 62, west along U.S. 62 to MO 53, north along MO 53 to MO 51, north along MO 51 to U.S. 60, west along U.S. 60 to MO 21, north along MO 21 to MO 72, east along MO 72 to MO 34, then east along MO 34 to I–55.

Ohio

Same zones as for ducks but in addition:

North Zone

*Lake Erie SJBP Zone:* That portion of the State encompassed by a line beginning in Lucas County at the Michigan State line on I–75, and extending south along I–75 to I–280, south along I–280 to I–80, east along I–80 to the Pennsylvania State line in Trumbull County, north along the Pennsylvania State line to SR 6 in Ashtabula County, west along SR 6 to the Lake/Cuyahoga County line, north along the Lake/Cuyahoga County line to the shore of Lake Erie.

Tennessee

*Southwest Zone:* That portion of the State south of State Highways 20 and 104, and west of U.S. Highways 45 and 45W.

*Northwest Zone:* Lake, Obion and Weakley Counties and those portions of Gibson and Dyer Counties not included in the Southwest Tennessee Zone.

*Kentucky/Barkley Lakes Zone:* That portion of the State bounded on the west by the eastern boundaries of the Northwest and Southwest Zones and on the east by State Highway 13 from the Alabama border to Clarksville and U.S. Highway 79 from Clarksville to the Kentucky border.

Wisconsin

Same zones as for ducks but in addition:

*Horicon Zone:* That area encompassed by a line beginning at the intersection of State Highway 21 and the Fox River in Winnebago County and extending westerly along State 21 to the west boundary of Winnebago County, southerly along the west boundary of Winnebago County to the north boundary of Green Lake County, westerly along the north boundaries of Green Lake and Marquette Counties to State 22, southerly along State 22 to State 33, westerly along State 33 to Interstate Highway 39, southerly along Interstate Highway 39 to Interstate Highway 90/94, southerly along I-90/94 to State 60, easterly along State 60 to State 83, northerly along State 83 to State 175, northerly along State 175 to State 33, easterly along State 33 to U.S. Highway 45, northerly along U.S. 45 to the east shore of the Fond Du Lac River, northerly along the east shore of the Fond Du Lac River to Lake Winnebago, northerly along the western shoreline of Lake Winnebago to the Fox River, then westerly along the Fox River to State 21.

*Collins Zone:* That area encompassed by a line beginning at the intersection of Hilltop Road and Collins Marsh Road in Manitowoc County and extending westerly along Hilltop Road to Humpty Dumpty Road, southerly along Humpty Dumpty Road to Poplar Grove Road, easterly and southerly along Poplar Grove Road to County Highway JJ, southeasterly along County JJ to Collins Road, southerly along Collins Road to the Manitowoc River, southeasterly along the Manitowoc River to Quarry

Road, northerly along Quarry Road to Einberger Road, northerly along Einberger Road to Moschel Road, westerly along Moschel Road to Collins Marsh Road, northerly along Collins Marsh Road to Hilltop Road.

*Exterior Zone:* That portion of the State not included in the Horicon or Collins Zones.

*Mississippi River Subzone:* That area encompassed by a line beginning at the intersection of the Burlington Northern & Santa Fe Railway and the Illinois border in Grant County and extending northerly along the Burlington Northern & Santa Fe Railway to the city limit of Prescott in Pierce County, then west along the Prescott city limit to the Minnesota border.

*Rock Prairie Subzone:* That area encompassed by a line beginning at the intersection of the Illinois border and Interstate Highway 90 and extending north along I–90 to County Highway A, east along County A to U.S. Highway 12, southeast along U.S. 12 to State Highway 50, west along State 50 to State 120, then south along 120 to the Illinois border.

*Brown County Subzone:* That area encompassed by a line beginning at the intersection of the Fox River with Green Bay in Brown County and extending southerly along the Fox River to State Highway 29, northwesterly along State 29 to the Brown County line, south, east, and north along the Brown County line to Green Bay, due west to the midpoint of the Green Bay Ship Channel, then southwesterly along the Green Bay Ship Channel to the Fox River.

*Central Flyway*

Colorado (Central Flyway Portion)

*Northern Front Range Area:* All lands in Adams, Boulder, Clear Creek, Denver, Gilpin, Jefferson, Larimer, and Weld Counties west of I–25 from the Wyoming border south to I–70; west on I–70 to the Continental Divide; north along the Continental Divide to the Jackson-Larimer County Line to the Wyoming border.

*South Park/San Luis Valley Area:* Alamosa, Chaffee, Conejos, Costilla, Custer, Fremont, Lake, Park, Teller, and Rio Grande Counties and those portions of Hinsdale, Mineral, and Saguache Counties east of the Continental Divide.

*North Park Area:* Jackson County.

*Arkansas Valley Area:* Baca, Bent, Crowley, Kiowa, Otero, and Prowers Counties.

*Pueblo County Area:* Pueblo County.

*Remainder:* Remainder of the Central Flyway portion of Colorado.

*Eastern Colorado Late Light Goose Area:* that portion of the State east of Interstate Highway 25.

Nebraska

Dark Geese

*Niobrara Unit:* Keya Paha County east of U.S. 183 and all of Boyd County, including the boundary waters of the Niobrara River. Where the Niobrara River forms the boundary, both banks will be in the Niobrara Unit.

*East Unit:* That area north and east of U.S. 281 at the Kansas/Nebraska border, north to Giltner Road (near Doniphan), east to NE 14, north to NE 66, east to U.S. 81, north to NE 22, west to NE 14 north to NE 91, east to U.S. 275, south to U.S. 77, south to NE 91, east to U.S. 30, east to Nebraska-Iowa border.

*Platte River Unit:* That area south and west of U.S. 281 at the Kansas/Nebraska border, north to Giltner Road (near Doniphan), east to NE 14, north to NE 66, east to U.S. 81, north to NE 22, west to NE 14 north to NE 91, west along NE 91 to the Greeley County line, north to the Wheeler County line, north along the Wheeler County line to the Holt County line, west along the northern border of Wheeler, Garfield, Loup, Blaine and Thomas counties to the Hooker County line, south along the Thomas/Hooker county lines to the McPherson County line, east along the south border of Thomas County to the western line of Custer County, south along the Custer/Logan County line to NE 92, west to U.S. 83, north to NE 92, west to NE 61, north along NE 61 to NE 2, west along NE 2 to the corner formed by Garden-Grant-Sheridan counties, west along the north border of Garden, Morrill and Scotts Bluff counties to the Wyoming border.

*North-Central Unit:* The remainder of the State.

Light Geese

*Rainwater Basin Light Goose Area (West):* The area bounded by the junction of U.S. 283 and U.S. 30 at Lexington, east on U.S. 30 to U.S. 281, south on U.S. 281 to NE 4, west on NE 4 to U.S. 34, continue west on U.S. 34 to U.S. 283, then north on U.S. 283 to the beginning.

*Rainwater Basin Light Goose Area (East):* The area bounded by the junction of U.S. 281 and U.S. 30 at Grand Island, north and east on U.S. 30 to NE 92, east on NE 92 to NE 15, south on NE 15 to NE 4, west on NE 4 to U.S. 281, north on U.S. 281 to the beginning.

*Remainder of State:* The remainder portion of Nebraska.

New Mexico (Central Flyway Portion)

Dark Geese

*Middle Rio Grande Valley Unit:* Sierra, Socorro, and Valencia counties.

*Remainder:* The remainder of the Central Flyway portion of New Mexico.

South Dakota

Canada Geese

*Unit 1:* Statewide except for Units 2, 3 and 4.

*Big Stone Power Plant Area:* That portion of Grant and Roberts Counties east of SD 15 and north of SD 20.

*Unit 2:* Brule, Buffalo, Charles Mix, Gregory, Hughes, Hyde, Lyman, Potter, Stanley, and Sully Counties and that portion of Dewey County south of U.S. 212.

*Unit 3:* Clark, Codington, Day, Deuel, Grant, Hamlin, Marshall, and Roberts Counties.

*Unit 4:* Bennett County.

Texas

*West Unit:* That portion of the State laying west of a line from the international toll bridge at Laredo; north along I–35 and I–35W to Fort Worth; northwest along U.S. 81 and U.S. 287 to Bowie; and north along U.S. 81 to the Oklahoma border.

*East Unit:* Remainder of State.

Wyoming (Central Flyway Portion)

Dark Geese

*Area 1:* Hot Springs, Natrona, and Washakie Counties, and the portion of Park County east of the Shoshone National Forest boundary and south of a line beginning where the Shoshone National Forest boundary crosses Park County Road 8VC, easterly along said road to Park County Road 1AB, easterly along said road to Wyoming Highway 120, northerly along said highway to Wyoming Highway 294, southeasterly along said highway to Lane 9, easterly along said lane to the town of Powel and Wyoming Highway 14A, easterly along said highway to the Park County and Big Horn County Line.

*Area 2:* Converse County.

*Area 3:* Albany, Big Horn, Campbell, Crook, Fremont, Johnson, Laramie, Niobrara, Sheridan, and Weston Counties, and that portion of Carbon County east of the Continental Divide; that portion of Park County west of the Shoshone National Forest boundary, and that Portion of Park County north of a line beginning where the Shoshone National Forest boundary crosses Park County Road 8VC, easterly along said road to Park County Road 1AB, easterly along said road to Wyoming Highway 120, northerly along said highway to

Wyoming Highway 294, southeasterly along said highway to Lane 9, easterly along said lane to the town of Powel and Wyoming Highway 14A, easterly along said highway to the Park County and Big Horn County Line.

*Area 4:* Goshen and Platte Counties.

*Pacific Flyway*

Arizona

*GMU 1 and 27:* Game Management Units 1 and 27.

*GMU 22 and 23:* Game Management Units 22 and 23.

*Remainder of State:* The remainder of Arizona.

California

*Northeastern Zone:* In that portion of California lying east and north of a line beginning at the intersection of the Klamath River with the California-Oregon line; south and west along the Klamath River to the mouth of Shovel Creek; along Shovel Creek to its intersection with Forest Service Road 46N05 at Burnt Camp; west to its junction with Forest Service Road 46N10; south and east to its Junction with County Road 7K007; south and west to its junction with Forest Service Road 45N22; south and west to its junction with Highway 97 and Grass Lake Summit; south along to its junction with Interstate 5 at the town of Weed; south to its junction with Highway 89; east and south along Highway 89 to main street Greenville; north and east to its junction with North Valley Road; south to its junction of Diamond Mountain Road; north and east to its junction with North Arm Road; south and west to the junction of North Valley Road; south to the junction with Arlington Road (A22); west to the junction of Highway 89; south and west to the junction of Highway 70; east on Highway 70 to Highway 395; south and east on Highway 395 to the point of intersection with the California-Nevada state line; north along the California-Nevada state line to the junction of the California-Nevada-Oregon state lines west along the California-Oregon state line to the point of origin.

*Colorado River Zone:* Those portions of San Bernardino, Riverside, and Imperial Counties east of a line extending from the Nevada border south along U.S. 95 to Vidal Junction; south on a road known as ''Aqueduct Road'' in San Bernardino County through the town of Rice to the San Bernardino-Riverside County line; south on a road known in Riverside County as the ''Desert Center to Rice Road'' to the town of Desert Center; east 31 miles on I–10 to the Wiley Well Road; south on this road to Wiley Well; southeast along the Army-Milpitas Road to the Blythe, Brawley, Davis Lake intersections; south on the Blythe-Brawley paved road to the Ogilby and Tumco Mine Road; south on this road to U.S. 80; east seven miles on U.S. 80 to the Andrade-Algodones Road; south on this paved road to the Mexican border at Algodones, Mexico.

*Southern Zone:* That portion of southern California (but excluding the Colorado River Zone) south and east of a line extending from the Pacific Ocean east along the Santa Maria River to CA 166 near the City of Santa Maria; east on CA 166 to CA 99; south on CA 99 to the crest of the Tehachapi Mountains at Tejon Pass; east and north along the crest of the Tehachapi Mountains to CA 178 at Walker Pass; east on CA 178 to U.S. 395 at the town of Inyokern; south on U.S. 395 to CA 58; east on CA 58 to I–15; east on I–15 to CA 127; north on CA 127 to the Nevada border.

*Imperial County Special Management Area:* The area bounded by a line beginning at Highway 86 and the Navy Test Base Road; south on Highway 86 to the town of Westmoreland; continue through the town of Westmoreland to Route S26; east on Route S26 to Highway 115; north on Highway 115 to Weist Rd.; north on Weist Rd. to Flowing Wells Rd.; northeast on Flowing Wells Rd. to the Coachella Canal; northwest on the Coachella Canal to Drop 18; a straight line from Drop 18 to Frink Rd.; south on Frink Rd. to Highway 111; north on Highway 111 to Niland Marina Rd.; southwest on Niland Marina Rd. to the old Imperial County boat ramp and the water line of the Salton Sea; from the water line of the Salton Sea, a straight line across the Salton Sea to the Salinity Control Research Facility and the Navy Test Base Road; southwest on the Navy Test Base Road to the point of beginning.

*Balance-of-the-State Zone:* The remainder of California not included in the Northeastern, Southern, and the Colorado River Zones.

*Del Norte and Humboldt Area:* The Counties of Del Norte and Humboldt.

*Sacramento Valley Special Management Area (East):* That area bounded by a line beginning at the junction of the Gridley-Colusa Highway and the Cherokee Canal; west on the Gridley-Colusa Highway to Gould Road; west on Gould Road and due west 0.75 miles directly to Highway 45; south on Highway 45 to Highway 20; east on Highway 20 to West Butte Road; north on West Butte Road to Pass Road; west on Pass Road to West Butte Road; north on West Butte Road to North Butte Road; west on North Butte Road and due west 0.5 miles directly to the Cherokee Canal; north on the Cherokee Canal to the point of beginning.

*Sacramento Valley Special Management Area (West):* That area bounded by a line beginning at Willows south on I–5 to Hahn Road; easterly on Hahn Road and the Grimes-Arbuckle Road to Grimes; northerly on CA 45 to the junction with CA 162; northerly on CA 45/162 to Glenn; and westerly on CA 162 to the point of beginning in Willows.

*San Joaquin Valley Special Management Area:* That area bounded by a line beginning at the intersection of Highway 5 and Highway 120; south on Highway 5 to Highway 33; southeast on Highway 33 to Crows Landing Road; north on Crows Landing Road to Highway 99; north on Highway 99 to Highway 120; west on Highway 120 to the point of beginning.

*Western Canada Goose Hunt Area:* That portion of the above described Sacramento Valley Area lying east of a line formed by Butte Creek from the Gridley-Colusa Highway south to the Cherokee Canal; easterly along the Cherokee Canal and North Butte Road to West Butte Road; southerly on West Butte Road to Pass Road; easterly on Pass Road to West Butte Road; southerly on West Butte Road to CA 20; and westerly along CA 20 to the Sacramento River.

Colorado (Pacific Flyway Portion)

*West Central Area:* Archuleta, Delta, Dolores, Gunnison, LaPlata, Montezuma, Montrose, Ouray, San Juan, and San Miguel Counties and those portions of Hinsdale, Mineral, and Saguache Counties west of the Continental Divide.

*State Area:* The remainder of the Pacific-Flyway Portion of Colorado.

Idaho

*Zone 1:* Benewah, Bonner, Boundary, Clearwater, Idaho, Kootenai, Latah, Lewis, Nez Perce, and Shoshone Counties.

*Zone 2:* The Counties of Ada; Adams; Boise; Canyon; those portions of Elmore north and east of I–84, and south and west of I–84, west of ID 51, except the Camas Creek drainage; Gem; Owyhee west of ID 51; Payette; Valley; and Washington.

*Zone 3:* The Counties of Blaine; Camas; Cassia; those portions of Elmore south of I–84 east of ID 51, and within the Camas Creek drainage; Gooding; Jerome; Lincoln; Minidoka; Owyhee east of ID 51; Power within the Minidoka National Wildlife Refuge; and Twin Falls.

*Zone 4:* The Counties of Bear Lake; Bingham within the Blackfoot Reservoir

drainage; Bonneville, Butte; Caribou except the Fort Hall Indian Reservation; Clark; Custer; Franklin; Fremont; Jefferson; Lemhi; Madison; Oneida; Power west of ID 37 and ID 39 except the Minidoka National Wildlife Refuge; and Teton.

*Zone 5:* All lands and waters within the Fort Hall Indian Reservation, including private inholdings; Bannock County; Bingham County, except that portion within the Blackfoot Reservoir drainage; and Power County east of ID 37 and ID 39.

In addition, goose frameworks are set by the following geographical areas:

*Northern Unit:* Benewah, Bonner, Boundary, Clearwater, Idaho, Kootenai, Latah, Lewis, Nez Perce, and Shoshone Counties.

*Southwestern Unit:* That area west of the line formed by U.S. 93 north from the Nevada border to Shoshone, northerly on ID 75 (formerly U.S. 93) to Challis, northerly on U.S. 93 to the Montana border (except the Northern Unit and except Custer and Lemhi Counties).

*Southeastern Unit:* That area east of the line formed by U.S. 93 north from the Nevada border to Shoshone, northerly on ID 75 (formerly U.S. 93) to Challis, northerly on U.S. 93 to the Montana border, including all of Custer and Lemhi Counties.

Montana (Pacific Flyway Portion)

*East of the Divide Zone:* The Pacific Flyway portion of the State located east of the Continental Divide.

*West of the Divide Zone:* The remainder of the Pacific Flyway portion of Montana.

Nevada

*Lincoln Clark County Zone:* All of Lincoln and Clark Counties

*Remainder-of-the-State Zone:* The remainder of Nevada.

New Mexico (Pacific Flyway Portion)

*North Zone:* The Pacific Flyway portion of New Mexico located north of I–40.

*South Zone:* The Pacific Flyway portion of New Mexico located south of I–40.

Oregon

*Southwest Zone:* Douglas, Coos, Curry, Josephine, and Jackson Counties.

*Northwest Special Permit Zone:* That portion of western Oregon west and north of a line running south from the Columbia River in Portland along I–5 to OR 22 at Salem; then east on OR 22 to the Stayton Cutoff; then south on the Stayton Cutoff to Stayton and due south to the Santiam River; then west along the north shore of the Santiam River to I–5; then south on I–5 to OR 126 at Eugene; then west on OR 126 to Greenhill Road; then south on Greenhill Road to Crow Road; then west on Crow Road to Territorial Hwy; then west on Territorial Hwy to OR 126; then west on OR 126 to OR 36; then north on OR 36 to Forest Road 5070 at Brickerville; then west and south on Forest Road 5070 to OR 126; then west on OR 126 to Milepost 19, north to the intersection of the Benton and Lincoln County line, north along the western boundary of Benton and Polk counties to the southern boundary of Tillamook County, west along the Tillamook County boundary to the Pacific Coast.

*Northwest Zone:* Those portions of Clackamas, Lane, Linn, Marion, Multnomah, and Washington Counties outside of the Northwest Special Permit Zone and all of Lincoln County.

*Closed Zone:* Those portions of Coos and Curry Counties south of Bandon and west of U.S. 101 and all of Tilamook and Lincoln Counties.

*Eastern Zone:* Hood River, Wasco, Sherman, Gilliam, Morrow, Umatilla, Deschutes, Jefferson, Crook, Wheeler, Grant, Baker, Union, and Wallowa Counties.

*Harney, Klamath, Lake, and Malheur County Zone:* All of Harney, Klamath, Lake, and Malheur Counties.

Utah

*Washington County Zone:* All of Washington County.

*Remainder-of-the-State Zone:* The remainder of Utah.

Washington

*Area 1:* Skagit, Island, and Snohomish Counties.

*Area 2A (SW Quota Zone):* Clark County, except portions south of the Washougal River; Cowlitz, and Wahkiakum counties.

*Area 2B (SW Quota Zone):* Pacific and Grays Harbor counties.

*Area 3:* All areas west of the Pacific Crest Trail and west of the Big White Salmon River which are not included in Areas 1, 2A and 2B.

*Area 4:* Adams, Benton, Chelan, Douglas, Franklin, Grant, Kittitas, Lincoln, Okanogan, Spokane, and Walla Walla Counties.

*Area 5:* All areas east of the Pacific Crest Trail and east of the Big White Salmon River which are not included in Area 4.

Wyoming (Pacific Flyway Portion)

See State Regulations.

*Bear River Area:* That portion of Lincoln County described in State regulations.

*Salt River Area:* That portion of Lincoln County described in State regulations.

*Eden-Farson Area:* Those portions of Sweetwater and Sublette Counties described in State regulations.

**Swans**

*Central Flyway*

South Dakota

Aurora, Beadle, Brookings, Brown, Brule, Buffalo, Campbell, Clark, Codington, Davison, Deuel, Day, Edmunds, Faulk, Grant, Hamlin, Hand, Hanson, Hughes, Hyde, Jerauld, Kingsbury, Lake, Marshall, McCook, McPherson, Miner, Minnehaha, Moody, Potter, Roberts, Sanborn, Spink, Sully, and Walworth Counties.

*Pacific Flyway*

Montana (Pacific Flyway Portion)

*Open Area:* Cascade, Chouteau, Hill, Liberty, and Toole Counties and those portions of Pondera and Teton Counties lying east of U.S. 287–89.

Nevada

*Open Area:* Churchill, Lyon, and Pershing Counties.

Utah

*Open Area:* Those portions of Box Elder, Weber, Davis, Salt Lake, and Toole Counties lying west of I–15, north of I–80 and south of a line beginning from the Forest Street exit to the Bear River National Wildlife Refuge boundary, then north and west along the Bear River National Wildlife Refuge boundary to the farthest west boundary of the Refuge, then west along a line to Promontory Road, then north on Promontory Road to the intersection of SR 83, then north on SR 83 to I–84, then north and west on I–84 to State Hwy 30, then west on State Hwy 30 to the Nevada-Utah state line, then south on the Nevada-Utah state line to I–80.

[FR Doc. 02–23803 Filed 9–18–02; 8:45 am]

BILLING CODE 4310–55–P

# Reader Aids

**Federal Register**

Vol. 67, No. 182

Thursday, September 19, 2002

## CUSTOMER SERVICE AND INFORMATION

| | |
|---|---|
| **Federal Register/Code of Federal Regulations** | |
| General Information, indexes and other finding aids | **202–523–5227** |
| **Laws** | **523–5227** |
| **Presidential Documents** | |
| Executive orders and proclamations | **523–5227** |
| **The United States Government Manual** | **523–5227** |
| **Other Services** | |
| Electronic and on-line services (voice) | **523–3447** |
| Privacy Act Compilation | **523–3187** |
| Public Laws Update Service (numbers, dates, etc.) | **523–6641** |
| TTY for the deaf-and-hard-of-hearing | **523–5229** |

## ELECTRONIC RESEARCH

### World Wide Web

Full text of the daily Federal Register, CFR and other publications is located at: **http://www.access.gpo.gov/nara**

Federal Register information and research tools, including Public Inspection List, indexes, and links to GPO Access are located at: **http://www.nara.gov/fedreg**

### E-mail

**FEDREGTOC-L** (Federal Register Table of Contents LISTSERV) is an open e-mail service that provides subscribers with a digital form of the Federal Register Table of Contents. The digital form of the Federal Register Table of Contents includes HTML and PDF links to the full text of each document.

To join or leave, go to **http://listserv.access.gpo.gov** and select *Online mailing list archives, FEDREGTOC-L, Join or leave the list (or change settings);* then follow the instructions.

**PENS** (Public Law Electronic Notification Service) is an e-mail service that notifies subscribers of recently enacted laws.

To subscribe, go to **http://hydra.gsa.gov/archives/publaws-l.html** and select *Join or leave the list* (or change settings); then follow the instructions.

**FEDREGTOC-L** and **PENS** are mailing lists only. We cannot respond to specific inquiries.

**Reference questions.** Send questions and comments about the Federal Register system to: **info@fedreg.nara.gov**

The Federal Register staff cannot interpret specific documents or regulations.

## FEDERAL REGISTER PAGES AND DATE, SEPTEMBER

56211–56474 ..... 3
56475–56744 ..... 4
56745–56894 ..... 5
56895–57122 ..... 6
57123–57308 ..... 9
57309–57500 .....10
57501–57718 .....11
57719–57936 .....12
57937–58318 .....13
58319–58508 .....16
58509–58682 .....17
58683–58954 .....18
58955–59132 .....19

## CFR PARTS AFFECTED DURING SEPTEMBER

At the end of each month, the Office of the Federal Register publishes separately a List of CFR Sections Affected (LSA), which lists parts and sections affected by documents published since the revision date of each title.

**3 CFR**

**Proclamations:**
7463 (See Notice of September 12, 2002) .....58317
7586 .....56211
7587 .....56745
7588 .....56893
7589 .....57123
7590 .....57125
7591 .....58955
7592 .....58957
7593 .....58959

**Executive Orders:**
10173 (Amended by EO 13273) .....56215
13273 .....56215
13223 (See Notice of September 12, 2002) .....58317
13235 (See Notice of September 12, 2002) .....58317
13253 (See Notice of September 12, 2002) .....58317

**Administrative Orders:**
Presidential Determinations:
No. 02–29 of August 30, 2002 .....57127
No. 01–26 of September 12, 2001 (See Presidential Determination No. 02–31) .....58681
No. 02–31 of September 13, 2002 .....58681
Notices:
Notice of September 12, 2002 .....58317

**5 CFR**

213 .....56475
1201 .....58961
2634 .....57937
8301 .....58319

**Proposed Rules:**
531 .....57536, 58839

**7 CFR**

301 .....58320, 58683
354 .....5621
785 .....57309
905 .....57319
916 .....58509
955 .....58511
989 .....57501
996 .....57129
997 .....57129
998 .....57129
999 .....57129, 57503
1219 .....56895
1230 .....58320
1470 .....57719
1487 .....57326
1717 .....58323
1946 .....57309

**Proposed Rules:**
400 .....58912
407 .....58912
457 .....58912
948 .....57537
1124 .....56936
1405 .....57759

**10 CFR**

Ch. 1 .....57084
16 .....57506

**Proposed Rules:**
Ch. 1 .....57120
50 .....59025
72 .....56876
430 .....56232
490 .....57347

**12 CFR**

7 .....58962
8 .....57509
37 .....58962
208 .....57938
951 .....58978

**Proposed Rules:**
1750 .....57760

**13 CFR**

121 .....56905, 56928

**Proposed Rules:**
102 .....57539
121 .....56944, 56966

**14 CFR**

21 .....57487, 57490
36 .....57487
39 .....56218, 56747, 56748, 56750, 57145, 57146, 57510, 57514, 57941, 58324, 58325, 58686
71 .....56475, 56476, 56477, 564778, 56929, 57329, 57941, 58982, 58983, 58984
73 .....57942
91 .....57487
217 .....58687
241 .....58687
298 .....58687

**Proposed Rules:**
39 .....56503, 56506, 56768, 57349, 57351, 57982, 57984, 57986, 57989, 57992, 58544, 58546, 58734, 58737, 59026, 59027
71 .....57063, 59029, 59030,

59032
91 ....56740
93 ....56740
135 ....57352
193 ....56770, 56774

**15 CFR**

774 ....58691
**Proposed Rules:**
806 ....57767

**16 CFR**

305 ....58327
**Proposed Rules:**
1610 ....57770

**17 CFR**

1 ....58284
41 ....58284
190 ....58284
200 ....56219
210 ....58480
228 ....57276
229 ....57276, 58480
232 ....57276
240 ....56462, 57276, 58284, 58302, 58480
249 ....56462, 57276, 58480
270 ....57276
274 ....56462, 57276
**Proposed Rules:**
249 ....57298
270 ....57298
274 ....57298

**18 CFR**

401 ....56753
**Proposed Rules:**
4 ....58739
16 ....58739
35 ....57187, 58751
101 ....57994
201 ....57994
352 ....57994
375 ....57994
388 ....57994

**21 CFR**

2 ....58678
522 ....57943
862 ....58328
**Proposed Rules:**
1310 ....56776

**22 CFR**

41 ....58693
121 ....58984
123 ....58984
**Proposed Rules:**
507 ....58548

**24 CFR**

982 ....56688

**26 CFR**

1 ....57330
301 ....57330
**Proposed Rules:**
1 ....56244, 56509, 57543, 58346, 58678
41 ....58346
48 ....58346
145 ....58346
301 ....57354

**27 CFR**

4 ....56479
9 ....56481

**28 CFR**

0 ....58988
2 ....57944
801 ....57947

**29 CFR**

1926 ....57722
4022 ....57949
4044 ....57949

**30 CFR**

42 ....57635
46 ....57635
47 ....57635
48 ....57635
56 ....57635
57 ....57635
77 ....57635
260 ....57737
**Proposed Rules:**
924 ....56967

**31 CFR**

**Proposed Rules:**
538 ....56969
550 ....56969
560 ....56969

**32 CFR**

220 ....57739
**Proposed Rules:**
861 ....56777

**33 CFR**

6 ....56215
100 ....56220, 56222, 57950
117 ....56222, 56754, 56929, 57147, 58329
155 ....58515
156 ....58515
165 ....56222, 56485, 56488, 56755, 57331, 57742, 57952, 58331, 58333, 58524, 58526
**Proposed Rules:**
2 ....58752
110 ....56245
117 ....56247, 57355, 57773
165 ....56245, 58006

**36 CFR**

242 ....58695
1191 ....56352
**Proposed Rules:**
7 ....56785, 57357
1190 ....56441
1191 ....56441

**37 CFR**

**Proposed Rules:**
201 ....58550

**38 CFR**

17 ....58528
4 ....58448
**Proposed Rules:**
4 ....56509, 59033
21 ....57543

**40 CFR**

9 ....58990
52 ....57148, 57155, 57515, 57517, 57520, 57744, 57954, 57957, 57960, 58335, 58697, 58711, 58998
58 ....57332
60 ....57520, 58998
61 ....57159
63 ....58339, 59001
70 ....58529
71 ....58529
75 ....57272
81 ....57332, 59005
180 ....56225, 56490, 57521, 57748, 58536, 58712, 58725, 59006
271 ....57337
300 ....56757, 57753, 58730, 58731, 59017
430 ....58990
**Proposed Rules:**
52 ....57187, 57188, 57357, 57549, 57550, 57775, 57776, 58009, 58551, 59034
58 ....57362
63 ....58347, 59034
70 ....57496, 58561
71 ....58561
81 ....56249, 57362, 58551
86 ....57188
90 ....57188
152 ....56970
158 ....56970
194 ....57189, 57190
271 ....57191
300 ....56794, 57778, 59035
451 ....57872
761 ....58567
1045 ....57188
1051 ....57188
1065 ....57188
1068 ....57188

**41 CFR**

102–42 ....56495
Ch. 301 ....57169
300-3 ....57963
301-1 ....57963
301-10 ....57963
301-11 ....57963
301-12 ....57963
301-30 ....57963
301-31 ....57963
301-50 ....57963
301-51 ....57963
301-52 ....57963
301-70 ....57963
301-71 ....57963
301-72 ....57963
301-73 ....57963
301-74 ....57963
301-75 ....57963
302-1 ....57963
302-2 ....57963
302-3 ....57963
302-4 ....57963
302-5 ....57963
302-7 ....57963
302-16 ....57963

**42 CFR**

51d ....56930
403 ....56618

**44 CFR**

65 ....57173, 57174
67 ....57177
**Proposed Rules:**
67 ....57193, 57196

**45 CFR**

**Proposed Rules:**
5b ....56252
1604 ....57550

**46 CFR**

28 ....58537
32 ....58515
109 ....58537
122 ....58537
131 ....58537
169 ....58537
185 ....58537
199 ....58537

**47 CFR**

0 ....58543
43 ....56496
63 ....56496, 57344
68 ....57181
73 ....57970
76 ....56880
**Proposed Rules:**
2 ....59036
15 ....59036
73 ....57203, 57779, 57780, 57781
76 ....56882
97 ....59036
101 ....59036

**48 CFR**

52 ....57635

**49 CFR**

107 ....58343
572 ....59020
593 ....59098
1200 ....57532
1201 ....57532
1241 ....57532
1242 ....57532
1243 ....57532
1244 ....57532
1511 ....56496
**Proposed Rules:**
71 ....58578
195 ....56970, 59045
571 ....56976
580 ....56976
581 ....56976
582 ....56976
583 ....56976
584 ....56976
585 ....56976
586 ....56976
587 ....56976
588 ....56976
1002 ....57554
1109 ....57557
1114 ....57557

**50 CFR**

17 ....57638
20 ....59110
25 ....58936
32 ....58936
100 ....58695
222 ....57970
223 ....56931, 57970
224 ....57970
300 ....58731
600 ....57973
635 ....56934
648 ....56229, 56765, 57758

660 .....56497, 56500, 57345, 57346, 57534, 57973, 58733
679 .....56230, 56231, 56766, 56934, 57183, 57184, 57185

**Proposed Rules:**

17 .....56254, 56257, 57558, 57783, 57784, 58580
223.....57204
224.....57204
622.....56516, 57785
648.....56525, 57207
679.....56692, 58452
697.....56800

## REMINDERS

The items in this list were editorially compiled as an aid to Federal Register users. Inclusion or exclusion from this list has no legal significance.

## RULES GOING INTO EFFECT SEPTEMBER 19, 2002

**ENVIRONMENTAL PROTECTION AGENCY**

Air quality planning purposes; designation of areas:
- California; correction; published 9-19-02

Pesticides; tolerances in food, animal feeds, and raw agricultural commodities:
- Diflubenzuron; published 9-19-02

**INTERIOR DEPARTMENT**

**Fish and Wildlife Service**

Endangered and threatened species:
- Critical habitat designations—
  - Newcomb's snail; published 8-20-02

Migratory bird hunting:
- Seasons, limits, and shooting hours; establishment, etc.; published 9-19-02

**JUSTICE DEPARTMENT**

Organization, functions, and authority delegations:
- Drug Enforcement Administration and Federal Bureau of Investigation; published 9-19-02

**MERIT SYSTEMS PROTECTION BOARD**

Practice and procedure:
- Case suspension procedures; published 9-19-02

**STATE DEPARTMENT**

International Traffic in Arms regulations:
- U.S. Munitions List; amendments; published 9-19-02

**TRANSPORTATION DEPARTMENT**

**Federal Aviation Administration**

Airworthiness directives:
- Boeing; published 8-15-02

**TRANSPORTATION DEPARTMENT**

**National Highway Traffic Safety Administration**

Motor vehicle safety standards:
- Nonconforming vehicles; importation eligibility determinations; list; published 9-19-02

## COMMENTS DUE NEXT WEEK

**AGRICULTURE DEPARTMENT**

**Agricultural Marketing Service**

Cotton; futures contracts spot price quotations; comments due by 9-23-02; published 7-23-02 [FR 02-18255]

Oranges, grapefuit, tangerines, and tangelos grown in—
- Florida; comments due by 9-23-02; published 7-23-02 [FR 02-18571]

Potatoes (Irish) grown in—
- Colorado; comments due by 9-26-02; published 9-11-02 [FR 02-23034]

Potatoes (Irish) grown in Idaho and Oregon, and imported; comments due by 9-23-02; published 7-23-02 [FR 02-18572]

**AGRICULTURE DEPARTMENT**

**Animal and Plant Health Inspection Service**

Livestock and poultry disease control:
- Cattle and other property disposed of because of bovine tuberculosis; indemnification; comments due by 9-24-02; published 7-26-02 [FR 02-18701]

**AGRICULTURE DEPARTMENT**

**Commodity Credit Corporation**

Loan and purchase programs:
- Agricultural Management Assistance Program; comments due by 9-27-02; published 8-28-02 [FR 02-21835]

**COMMERCE DEPARTMENT**

**National Oceanic and Atmospheric Administration**

Endangered and threatened species:
- Critical habitat designations—
  - Gulf sturgeon; comments due by 9-23-02; published 6-6-02 [FR 02-13620]

Fishery conservation and management:
- Caribbean, Gulf of Mexico, and South Atlantic fisheries—
  - South Atlantic shrimp; comments due by 9-23-02; published 7-25-02 [FR 02-18857]
- Northeastern United States fisheries—
  - Atlantic hagfish; comments due by 9-27-02; published 8-28-02 [FR 02-21984]
  - Mid-Atlantic and New England Fishery Management Councils; meetings; comments due by 9-27-02; published 8-23-02 [FR 02-21589]
- West Coast States and Western Pacific fisheries—
  - West Coast salmon; comments due by 9-25-02; published 9-10-02 [FR 02-22922]

International fisheries regulations:
- Pacific halibut—
  - Subsistence fishing; comments due by 9-25-02; published 8-26-02 [FR 02-21456]

**ENERGY DEPARTMENT**

**Federal Energy Regulatory Commission**

Natural Gas Policy Act:
- Natural gas pipeline negotiated rate policies and practices; notice of inquiry; comments due by 9-25-02; published 7-25-02 [FR 02-18782]
- Natural gas pipeline negotiated rate policies and practices; comments due by 9-25-02; published 8-22-02 [FR 02-21272]

**ENVIRONMENTAL PROTECTION AGENCY**

Air quality implementation plans; approval and promulgation; various States; air quality planning purposes; designation of areas:
- New Jersey; comments due by 9-23-02; published 8-23-02 [FR 02-21283]

Air quality implementation plans; approval and promulgation; various States:
- Arizona; comments due by 9-25-02; published 8-26-02 [FR 02-21558]
- California; comments due by 9-23-02; published 8-22-02 [FR 02-21435]
- Massachusetts; comments due by 9-27-02; published 8-28-02 [FR 02-21940]
- Missouri; comments due by 9-26-02; published 8-27-02 [FR 02-21659]
- Montana; comments due by 9-27-02; published 8-28-02 [FR 02-21944]

Air quality planning purposes; designation of areas:
- California; comments due by 9-23-02; published 8-23-02 [FR 02-21560]

Superfund program:
- National oil and hazardous substances contingency plan—
  - National priorities list update; comments due by 9-23-02; published 8-23-02 [FR 02-21553]
  - National priorities list update; comments due by 9-27-02; published 8-28-02 [FR 02-22080]

**FEDERAL COMMUNICATIONS COMMISSION**

Radio stations; table of assignments:
- California; comments due by 9-23-02; published 8-14-02 [FR 02-20598]
- South Carolina; comments due by 9-23-02; published 8-14-02 [FR 02-20595]
- Various States; comments due by 9-23-02; published 8-14-02 [FR 02-20594]

**FEDERAL ELECTION COMMISSION**

Federal Election Campaign Act:
- Disclaimers, fraudulent solicitation, civil penalties, and personal use of campaign funds; comments due by 9-27-02; published 8-29-02 [FR 02-21893]

**HEALTH AND HUMAN SERVICES DEPARTMENT**

**Centers for Medicare & Medicaid Services**

Health care access:
- Group health insurance market requirements; non-Federal governmental plans; exemption elections; comments due by 9-24-02; published 7-26-02 [FR 02-17621]

Medicare:
- Cost reports; electronic submission; comments due by 9-24-02; published 7-26-02 [FR 02-18982]

**HOUSING AND URBAN DEVELOPMENT DEPARTMENT**

Mortgage and loan insurance programs:
- Appraiser Watch Initiative; comments due by 9-23-02; published 7-23-02 [FR 02-18672]

**HOUSING AND URBAN DEVELOPMENT DEPARTMENT**

**Federal Housing Enterprise Oversight Office**

Risk-based capital:

Corrections and technical amendments; comments due by 9-23-02; published 9-12-02 [FR 02-23078]

**INTERIOR DEPARTMENT**

**Fish and Wildlife Service**

Endangered and threatened species:

Critical habitat designations—

Gulf sturgeon; comments due by 9-23-02; published 6-6-02 [FR 02-13620]

**INTERIOR DEPARTMENT**

**Surface Mining Reclamation and Enforcement Office**

Permanent program and abandoned mine land reclamation plan submissions:

Mississippi; comments due by 9-23-02; published 9-6-02 [FR 02-22690]

**JUSTICE DEPARTMENT**

**Prisons Bureau**

Inmate control, custody, care, etc.:

District of Columbia; educational good time credit; comments due by 9-23-02; published 7-24-02 [FR 02-18625]

**LIBRARY OF CONGRESS**

**Copyright Office, Library of Congress**

Copyright office and procedures:

Sound recordings; public performance; service definition; comments due by 9-24-02; published 9-17-02 [FR 02-23731]

**POSTAL SERVICE**

Domestic Mail Manual:

Standard mail and periodicals letter-size and flat-size mail; simplified address format; comments due by 9-23-02; published 8-22-02 [FR 02-21461]

**SECURITIES AND EXCHANGE COMMISSION**

Investment advisers:

Custody of funds or securities of clients; comments due by 9-25-02; published 7-25-02 [FR 02-18698]

Securities:

Regulation analyst certification; comments due by 9-23-02; published 8-8-02 [FR 02-20031]

**TRANSPORTATION DEPARTMENT**

**Coast Guard**

Ports and waterways safety:

Chesapeake Bay, VA; port access routes study; comments due by 9-24-02; published 7-26-02 [FR 02-18914]

Jacksonville Captain of Port zone, FL; security zones; comments due by 9-27-02; published 8-28-02 [FR 02-21919]

**TRANSPORTATION DEPARTMENT**

**Federal Aviation Administration**

Airworthiness directives:

Barry Aviation, LLC; comments due by 9-27-02; published 8-16-02 [FR 02-20400]

Bell; comments due by 9-23-02; published 8-22-02 [FR 02-21357]

Boeing; comments due by 9-23-02; published 8-9-02 [FR 02-20132]

Dassault; comments due by 9-23-02; published 8-23-02 [FR 02-21507]

Empresa Brasileira de Aeronautica S.A. (EMBRAER); comments due by 9-23-02; published 7-24-02 [FR 02-18028]

Honeywell; comments due by 9-23-02; published 7-25-02 [FR 02-18816]

McDonnell Douglas; comments due by 9-23-02; published 8-29-02 [FR 02-22003]

Pilatus Britten-Norman Ltd.; comments due by 9-27-02; published 8-22-02 [FR 02-21356]

Class D airspace; comments due by 9-26-02; published 8-27-02 [FR 02-21786]

**TRANSPORTATION DEPARTMENT**

**Federal Highway Administration**

Engineering and traffic operations:

Truck size and weight—

Commercial vehicle width exclusive devices; comments due by 9-27-02; published 7-29-02 [FR 02-19029]

**TRANSPORTATION DEPARTMENT**

**National Highway Traffic Safety Administration**

Motor vehicle safety standards:

Accelerator control systems; comments due by 9-23-02; published 7-23-02 [FR 02-18477]

Correction; comments due by 9-23-02; published 8-9-02 [FR C2-18477]

Vehicle safety rulemaking priorities (2002-2005); comments due by 9-23-02; published 7-25-02 [FR 02-18760]

**TRANSPORTATION DEPARTMENT**

**Research and Special Programs Administration**

Pipeline safety:

Hazardous liquid transportation—

Hazardous liquid pipeline operator annual report form; comments due by 9-24-02; published 7-26-02 [FR 02-18908]

**TREASURY DEPARTMENT**

**Alcohol, Tobacco and Firearms Bureau**

Alcohol; viticultural area designations:

Capay Valley, Yolo County, CA; comments due by 9-23-02; published 7-25-02 [FR 02-18554]

Alcoholic beverages:

Malt beverages; labeling and advertising; comments due by 9-25-02; published 8-22-02 [FR 02-21455]

**TREASURY DEPARTMENT**

**Customs Service**

Air commerce:

Security areas at airports; employee access; comments due by 9-27-02; published 7-29-02 [FR 02-19055]

Drawback:

Manufacturing substitution drawback; duty apportionment; comments due by 9-23-02; published 7-24-02 [FR 02-18609]

Foreign trade zones:

Expanded weekly entry procedure; revisions; comments due by 9-23-02; published 7-25-02 [FR 02-18665]

**TREASURY DEPARTMENT**

**Internal Revenue Service**

Estate and gift taxes:

Right to recover gift tax and tax consequences; comments due by 9-24-02; published 7-22-02 [FR 02-18184]

Income taxes:

Guaranteed annuity and lead unitrust interests; definition; comments due by 9-25-02; published 7-23-02 [FR 02-18185]

## LIST OF PUBLIC LAWS

This is a continuing list of public bills from the current session of Congress which have become Federal laws. It may be used in conjunction with ''P L U S'' (Public Laws Update Service) on 202–523–6641. This list is also available online at *http://www.nara.gov/fedreg/plawcurr.html*.

The text of laws is not published in the **Federal Register** but may be ordered in ''slip law'' (individual pamphlet) form from the Superintendent of Documents, U.S. Government Printing Office, Washington, DC 20402 (phone, 202–512–1808). The text will also be made available on the Internet from GPO Access at *http://www.access.gpo.gov/nara/nara005.html*. Some laws may not yet be available.

**H.R. 223/P.L. 107–211**

To amend the Clear Creek County, Colorado, Public Lands Transfer Act of 1993 to provide additional time for Clear Creek County to dispose of certain lands transferred to the county under the Act. (Aug. 21, 2002; 116 Stat. 1050)

**H.R. 309/P.L. 107–212**

Guam Foreign Investment Equity Act (Aug. 21, 2002; 116 Stat. 1051)

**H.R. 601/P.L. 107–213**

To redesignate certain lands within the Craters of the Moon National Monument, and for other purposes. (Aug. 21, 2002; 116 Stat. 1052)

**H.R. 1384/P.L. 107–214**

Long Walk National Historic Trail Study Act (Aug. 21, 2002; 116 Stat. 1053)

**H.R. 1456/P.L. 107–215**

Booker T. Washington National Monument Boundary Adjustment Act of 2002 (Aug. 21, 2002; 116 Stat. 1054)

**H.R. 1576/P.L. 107–216**

James Peak Wilderness and Protection Area Act (Aug. 21, 2002; 116 Stat. 1055)

**H.R. 2068/P.L. 107–217**

To revise, codify, and enact without substantive change certain general and permanent laws, related to public buildings, property, and works, as title 40, United States Code, ''Public Buildings, Property, and Works''. (Aug. 21, 2002; 116 Stat. 1062)

**H.R. 2234/P.L. 107–218**
Tumacacori National Historical Park Boundary Revision Act of 2002 (Aug. 21, 2002; 116 Stat. 1328)

**H.R. 2440/P.L. 107–219**
To rename Wolf Trap Farm Park as ''Wolf Trap National Park for the Performing Arts'', and for other purposes. (Aug. 21, 2002; 116 Stat. 1330)

**H.R. 2441/P.L. 107–220**
To amend the Public Health Service Act to redesignate a facility as the National Hansen's Disease Programs Center, and for other purposes. (Aug. 21, 2002; 116 Stat. 1332)

**H.R. 2643/P.L. 107–221**
Fort Clatsop National Memorial Expansion Act of 2002 (Aug. 21, 2002; 116 Stat. 1333)

**H.R. 3343/P.L. 107–222**
To amend title X of the Energy Policy Act of 1992, and for other purposes. (Aug. 21, 2002; 116 Stat. 1336)

**H.R. 3380/P.L. 107–223**
23 To authorize the Secretary of the Interior to issue right-of-way permits for natural gas pipelines within the boundary of Great Smoky Mountains National Park. (Aug. 21, 2002; 116 Stat. 1338)

**Last List August 12, 2002**

## Public Laws Electronic Notification Service (PENS)

**PENS** is a free electronic mail notification service of newly enacted public laws. To subscribe, go to *http://hydra.gsa.gov/archives/publaws-l.html* or send E-mail to **listserv@listserv.gsa.gov** with the following text message:

**SUBSCRIBE PUBLAWS-L**
Your Name.

**Note:** This service is strictly for E-mail notification of new laws. The text of laws is not available through this service. **PENS** cannot respond to specific inquiries sent to this address.